Sl No	SURFACE LOCATION	PGMA	SURFACE PREPARATION	PRIMER		FINISH		TOTAL DFT IN (µm min.)
				PAINT	DFT (µm min.)	PAINT	DFT (µm min.)	
				Pipe, Valves & Instruments Special Tools				

SNO	PGMA	PGMA DESCRIPTION	PGMA DETAILS
10	FW 244	Oxidation air distribution System	Pipe & Fittings Flanges Pipe Hanger, Bottom Elbow, Bottom sliding supports
11	FW 251	Expansion joint between bypass	Expansion joints Seal Plates & Fasteners
12	FW 252	Expansion joint between scrubbers	Fabric & its fixing fasteners Sleeves & Flanges Gaskets
13	FW 255	Ducts between bypass duct inlet & booster fan	Plates & Stiffeners Guide Vanes
14	FW 256	Ducts between Booster fan & Absorber	Plates & Stiffeners Guide Vanes
15	FW 257	Ducts between Absorber & stack	Plates & Stiffeners Guide Vanes
16	FW 260	Duct structure between bypass duct& Booster fan	Duct Supports Gusset Plate Divider plate Internal Struts Support bearings
17	FW 261 FW 262	Duct structure between booster fan& absorber & Absorber and Stack	Duct Supports Gusset Plate Divider plate Internal Struts Support bearings
18	FW 292	Structures for Elevator	Columns Seal Plate Bracings Enclosure (Purlin& sheeting)
19	FW 293	Elevator and accessories	Base Frame Buffer Spring Mast Section Cage Control Panel & AC Mandatory Spares

Sl No	SURFACE LOCATION	PGMA	SURFACE PREPARATION	PRIMER		FINISH		TOTAL DFT IN (µm min.)
				PAINT	DFT (µm min.)	PAINT	DFT (µm min.)	

SNO	PGMA	PGMA DESCRIPTION	PGMA DETAILS
20	FW 310	Structures for booster fan handling	Columns Beams Bracings Seal plate
21	FW 610 FW 722	Galleries & railings for Scrubbers, Tank	Stairs Handrail Step treads Floor grills Ladders Foundation bolts Fasteners
22	FW 701	Slurry pumps & accessories	Slurry Pumps incl Shaft seal Common Base Plate Coupling and Guard Belt & Pulley Expansion Bellow Anchor Bolts & Fasteners Motor & accessories Sump Pumps incl Shaft seal Common Base Plate Coupling and Guard Belt & Pulley Anchor Bolts & Fasteners Motor & accessories
23	FW 710	Monorail for hoist& cranes	Insert Plate Stiffener plate Monorail beam
24	FW 721	Agitator support	Channels & Beams
25	FW 730	Limestone silo structures	Columns Beams Bracings Seal plate Angles, channels

Sl No	SURFACE LOCATION	PGMA	SURFACE PREPARATION	PRIMER		FINISH		TOTAL DFT IN (µm min.)
				PAINT	DFT (µm min.)	PAINT	DFT (µm min.)	

SNO	PGMA	PGMA DESCRIPTION	PGMA DETAILS
26	FW 731	Limestone silo	Base plate & its supports Shell, Roof
27	FW 723 FW 724 FW 725	Air cannon Bag filter Nozzles & flanges	Bag filter Air cannon bin activator Nozzles & Flanges
28	FW 733	Limestone silo approach platforms	Stairs Handrail Step treads Floor grills Ladders Foundation bolts Fasteners
29	FW 734	Limestone mill	Wet ball mill Hydro cyclone- Mill area Mill circuit pump Mill separator tank with Agitator
30	FW 742	Lime stone slurry storage tank	Base plate & its supports Shell, Roof
31	FW 743	Auxiliary Absorber tank	Base plate & its supports Shell, Roof
32	FW 744	Filtrate tank	Base plate & its supports Shell, Roof
33	FW 745	Wastage water tank	Base plate & its supports Shell, Roof
34	FW 747	Hydro cyclone waste water tank	Base plate & its supports Shell, Roof
35	FW 748 FW 785 FW 786	Process Water tank Belt filter washing tank Primary Hydro cyclone feed tank	Base plate & its supports Shell, Roof
36	FW 751 FW 752	Process water pipe accessories Cooling water pipe accessories	CS/FRP Pipes & Fittings Sight Glass R Orifice Gaskets & Fasteners
37	FW 753	Slurry pipe accessories	CSRL/FRP Pipes & Fittings Strainer (Cone) Expansion Joint-Rubber R Orifice Gaskets & Fasteners

Sl No	SURFACE LOCATION	PGMA	SURFACE PREPARATION	PRIMER		FINISH		TOTAL DFT IN (µm min.)
				PAINT	DFT (µm min.)	PAINT	DFT (µm min.)	

SNO	PGMA	PGMA DESCRIPTION	PGMA DETAILS
38	FW 754	Service air pipe accessories	GI Pipes & Fittings Flexible Hose Expansion Joint (Metallic) Hose connector R Orifice Gaskets & Fasteners
39	FW 755	Instrument air pipe accessories	SS Pipes & Fittings Strainer(Y Type) Gaskets & Fasteners
40	FW 815 to FW 851	Valves and fittings	Globe valves Ball Valves Butterfly Valves Diaphragm Valves Gate Valves CheckValves Pinch Valves Knife Gate Valves Control Valves Relief Valves
41	FW 761 FW 765	Structures for Pipe racks Structures for Sub pipe racks	Bracings Columns
42	FW 280 FW 281 FW 282 FW 283 FW 740 FW 760 FW 763	Foundation material for duct structure Foundation material for absorber Foundation material for Tanks Foundation material for Pipe racks Foundation material for Elevator Foundation material for RC pump shed	Foundation bolts Template
43	FW 766	Platforms for Pipe rack	Stairs Handrail Step treads Floor grills Ladders Foundation bolts Fasteners
44	FW 768 FW 769	Trestle for Main & sub Pipe racks	Truss Beams, Supports for all Pipes
45	FW 779	Supports for cable tray	Double Sup Channel & Base plates Single Sup Channel & Base plates

Sl No	SURFACE LOCATION	PGMA	SURFACE PREPARATION	PRIMER		FINISH		TOTAL DFT IN (µm min.)
				PAINT	DFT (µm min.)	PAINT	DFT (µm min.)	

			Cantilever Arm Fasteners & clamps Brackets
46	FW 996	Tools	Erection , commissioning, special tools
SNO	PGMA	PGMA DESCRIPTION	PGMA DETAILS
47	FW 798	Air receivers	Instrument Air receivers Any Instruments/Valves
48	FW 800	Clarified water tank	Base plate & its supports Shell, Roof
49	FW 802	Neutralization tank & accessories	Base plate & its supports Shell, Roof
50	FW 988 FW 997 FW 999	Commissioning spares & Mandatory spares	Startup & commissioning spares Mandatory spares

SECTION-I

SUB-SECTION-D

ANNEXURE-I
LIST OF MAKES OF SUB-VENDOR ITEMS
MISCELLANEOUS TANKS

07/07/15
VIPIN NAUNI
PEM-NOIDA

SUB-VENDORS - MISCELLANEOUS TANKS

S.NO	ITEM	SUB-VENDORS	PLACE	TECHNICAL LIMIT
1	CS PIPES ERW	TISCO	JAMSHEDPUR	UP TO 350 NB
		SAIL	ROURKELA	
		SURYA ROSHNI	BAHADURGARH	UP TO 400 NB
		JINDAL	GHAZIABAD	UP TO 350 NB
		RATNAMANI	KUTCH	UP TO 400 NB
		MAHARASHTRA SEAMLESS	RAIGARH	UP TO 500 NB
		WELSPUN	ANJAR	UP TO 400 NB (IS 3589)
2	CS PIPES SEAMLESS	MAHARASHTRA SEAMLESS	RAIGARH	UP TO 350 NB
		ISMT	AHMEDNAGAR	UP TO 150 NB
		JINDAL SAW	NASHIK	
		REMI METAL GUJRAT LTD	BHARUCH	UP TO 150 NB HOT FINISH & UPTO 100NB COLD FINISH
		ISMT	BARAMATI	UP TO 200 NB
3	SS PIPES	REMI	TARAPUR	
		RATNAMANI	KUTCH	
		APEX TUBES	BEHROR (ALWAR)	
		PRAKASH STEELAGE LTD	MUMBAI	SS SEAMLESS PIPE UPTO 50MM
		SUMITAMO	JAPAN	
4	STRUCTURAL STEEL / MS PLATE	SAIL		
		ESSAR STEEL		
		TISCO		
		RINL		
		JINDAL		
		M/S UTTAM VALUE STEEL (LLOYDS)		
		ISPAT		
		JSW		
		INDIAN IRON & STEEL CO. LTD		
5	GATE, GLOBE AND CHECK (STAINLESS STEEL VALVES)	A.V. VALVES LTD	AGRA	
		FLUIDLINE VALVES COMPANY PVT.LTD.	GHAZIABAD	
		M/S GM ENGINEERING	RAJKOT	
		INTERVALVE (INDIA) LTD.	PUNE	A) STEEL GATE VALVES: UPTO 50NB, #800 AND 65NB TO 150NB, #150 B) STEEL GLOBE VALVES: UPTO 50NB, #800 AND 65NB TO 100NB, #150 C)SUPPLIER NOT REGISTERED FOR NR VALVES
		LEADER VALVES LTD.	JALANDHAR	
		NITON VALVE INDUSTRIES PVT LTD	MUMBAI	
		NSSL LIMITED.	NAGPUR	
		STEEL STRONG VALVES (I) PVT.LTD.,	MUMBAI	LIMIT AS PER VD FILE AS ATTACHED IN SHEET 2
		VALTECH INDUSTRIES	MUMBAI	CAST CARBON & ALLOY STEEL - VALVE/RATING/SIZE- GV/150/900,GV/300/400, GV/600/300 , GV/GLV/NRV/900/250 , GLV/300/300,GLV/150/350/ , SCNRV/150/700, SCNRV/300/350, SCNRV/600/250.

		V.K. VALVES PVT. LTD.,	JALANDHAR	
		WEIR BDK VALVES	NEW DELHI	
		AUDCO		
		OSWAL INDUSTRIES		
6	**GATE, GLOBE AND CHECK (CS STEEL VALVES)**	A.V. VALVES LTD	AGRA	
		ATAM VALVES PVT. LTD.	JALANDHAR	
		FLUIDLINE VALVES COMPANY PVT.LTD.	GHAZIABAD	
		M/S GM ENGINEERING	RAJKOT	
		INTERVALVE (INDIA) LTD.	PUNE	A) STEEL GATE VALVES: UPTO 50NB, #800 AND 65NB TO 150NB, #150 B) STEEL GLOBE VALVES: UPTO 50NB, #800 AND 65NB TO 100NB, #150 C)SUPPLIER NOT REGISTERED FOR NR VALVES
		LEADER VALVES LTD.	JALANDHAR	
		NITON VALVE INDUSTRIES PVT LTD	MUMBAI	
		NSSL LIMITED.	NAGPUR	
		STEEL STRONG VALVES (I) PVT.LTD.,	MUMBAI	LIMIT AS PER VD FILE AS ATTACHED IN SHEET 2
		VENUS PUMPS AND ENGG. WORKS	KOLKATA	CC/CSS-GATE-BBT-UPTO600NB CL UPTO300,GATE-PSBT UPTO250NB CL 1500,GLV-BBT-UPTO300NB CL UPTO600,SCNRV-BBT-UPTO600NB CL UPTO150,SCNRV-BBT-UPTO300NB CL 300,SCNRV-PSBT-UPTO150NB CL UPTO900
		VALTECH INDUSTRIES	MUMBAI	CAST CARBON & ALLOY STEEL - VALVE/RATING/SIZE- GV/150/900,GV/300/400, GV/600/300 , GV/GLV/NRV/900/250 , GLV/300/300,GLV/150/350/ , SCNRV/150/700, SCNRV/300/350, SCNRV/600/250.
		V.K. VALVES PVT. LTD.,	JALANDHAR	
		WEIR BDK VALVES	NEW DELHI	
		AUDCO -L&T	CHENNAI / COIMBATORE	
		OSWAL INDUSTRIES		
		HITECH	AHMEDABAD	
		KSB WATER PUMPS / VALVES	COIMBATORE	
		KBL	KONDHAPURI	
		HAWA ENGINEERS	AHMEDABAD	
		BHEL	GOINDWAL	
		FOURESS ENGG	MUMBAI	UPTO 600 NB, CL-300 & 300NB CL-600
		FOURESS ENGG	AURANGABAD	
7	**LEVEL INDIATOR FLOAT AND BOARD TYPE**	FLOW STAR	FARIDABAD	
		SCIENTIFIC DEVICES	MUMBAI	
		GAUGES BOURDEN	PANVEL	
		PUNE TECHTROL	PUNE	
		SBEM	PUNE	
		LEVCON	KOLKATA	
		SIGMA	MUMBAI	

		CHEMTROL		
		DK INSTRUMENT	KOLKATA	
		V AUTOMAT	DELHI	
8	**PAINT**	ASIAN PAINT		
		BERGER		
		KANSAI NEROLAC		
		JOTUN		
		SHALIMAR		
		JENSON & NICHOLSON (I) LTD		
		CDC CARBOLINE (I) LTD.		
		ADDISON PAINTS LTD		
		GRAND POLYCOAT		
		BOMBAY PAINTS		
		HEMPLE PAINTS (SINGAPORE)		
		AKZONOBEL COATINGS		
9	**FITTINGS (MS/SS)**	PIPE FIT ENGINEERS	VADODARA	
		GUJRAT INFRA PIPES	VADODARA	
		MS FITTINGS	KOLKATA	
		TUBE PRODUCT	VADODARA	
		SIDDARTH & GAUTAM	FARIDABAD	
		EBY	MUMBAI	
		NL HAZRA	KOLKATA	
		EXCEL METAL		
		INTERTECH		
		FITTECH		
		METAL LLOYDS	MUMBAI	
		TRUE FORGE	FARIDABAD	
10	**SEAL POT / NAOH BREATHER**	SELF MANUFACTURED ITEM		
	INSPECTION CATEGORIZATION			
	1. CAT I :INSPECTION BY OWNER, BHEL/BHEL NOMINATED TPIA & VENDOR .MDCC WILL BE ISSUED BASED ON INSPECTION REPORT IN LINE ITH APPROVED QAP.			
	2. CAT II:INSPECTION BY BHEL/BHEL NOMINATED TPIA & VENDOR. MDCC WILL BE ISSUED BASED ON INSPECTION REPORT IN LINE ITH APPROVED QAP.			
	3. CAT III: MDCC WILL BE ISSUSED BASED COC & MTC ISSUSD BY VENDOR AND VERIFICATION BY BHEL/OWNER IN LINE WITH APPROVED QAP/CHECK LIST			

The make of Sub-vendor items shall be generally as indicated above which is subject to customer / BHEL approval during detail engineering.

Make of any unlisted items shall be subject to customer / BHEL approval during detail engineering. For such items, bidder to furnish list of sub-vendors during detail engineering stage for Customer / BHEL's review and approval. Bidder shall furnish following supporting documentation within 1 month of placement of LOI. Thereafter no request for additional sub-vendor shall be entertained.

a) Documentation to show that the equipment /system has been supplied for a plant of similar or higher capacity.

b) Documentation in the form of certificate that the equipment/system has been operating satisfactorily for two years as on the scheduled date of bid opening.

The successful bidder will get the makes of all items approved from Customer/ Consultant during detail engineering within two months of placement of LOI. The complete list will be necessarily be submitted within one month of placement of LOI to ensure timely placement of order for BOIs

Bidder to assess the capability of their proposed sub-vendors in terms of preparation of drawings, calculations, documents, quality assurance, supply of material etc. as per project schedule before placing the order on them.

Dealers are not acceptable for any item of the package. Bidder shall procure all items including plates, structural, flanges; counter flanges etc. from approved sub vendor only.

QUALIFYING REQUIREMENTS FOR RUBBER LINING FOR SLURRY TANKS

Rubber Lining for the Wet Limestone based Flue Gas Desulphurisation (FGD) System offered by the bidder shall be only from such manufacturer(s) who has supplied rubber lining (Bromo Butyl lining) application for coal based thermal power station for Wet Limestone based FGD application or similar application in other process industry. The lining shall be guaranteed for uninterrupted minimum life of 25,000 hrs. Proof of such guarantee may be established from performance certificate/Test Certificates.

The manufacturer proposed by the bidder shall be subjected to NPGCL approval during detail engineering.

ANNEXURE-II

QUALITY PLANS

	MANUFACTURER/ BIDDER/ SUPPLIER NAME & ADDRESS	QUALITY PLAN		SPEC. NO : PE-TS-XXX-167-A001	DATE: XX.XX.XX
		CUSTOMER :		QP NO.: PE-QAP-XXX-167-A001(PL)	DATE: 11.02.2020
		PROJECT:		PO NO.: LATER	DATE: XX.XX.XX
		ITEM: MS PLATES	SYSTEM: MISC.TANKS (SITE FABRICATED)	SECTION:	SHEET 1 OF 1

SL NO.	COMPONENT & OPERATIONS	CHARACTERISTICS	CLASS	TYPE OF CHECK	QUANTUM OF CHECK		REFERENCE DOCUMENT	ACCEPTANCE NORMS	FORMAT OF RECORD		AGENCY			REMARKS
1	2	3	4	5	6		7	8	9	*	**			
					M	C/ N				D	M	C	N	
1.0 RAW MATERIAL														
1	STEEL PLATES	Chemical composition and Mechanical test	MA	Review of corelated MTC	one/heat		IS:2062	IS:2062	Mfgr. TC	√	P	V	V	Refer Note below
2		Visual and dimensional check	MA	Visual and measurement	100%		Mfg.TC	Mfg.TC IS1852	Mfgr. TC	√	P	** W	** W	
3		Identification/ marking	MA	Corelation establish	100%		As per manufacturing practice	As per manufacturing practice IS 2062	Mfgr. TC	√	P	V	** W	

LEGENDS:

*RECORDS, INDENTIFIED WITH "TICK"(√) SHALL BE ESSENTIALLY INCLUDED BY SUPPLIER IN QA DOCUMENTATION,

** **M**: SUPPLIER/ MANUFACTURER/ SUB-SUPPLIER, **C**: MAIN SUPPLIER/ BHEL/ THIRD PARTY INSPECTION AGENCY, **N**: CUSTOMER,

P: PERFORM, **W**: WITNESS, **V:** VERIFICATION, AS APPROPRIATE

MA: MAJOR, **MI**: MINOR, **CR:** CRITICAL

NOTE: i) In case material is dispatched directly from Approved sub-vendor plant/stockyard or procured from dealer against co related TC's witnessing by BHEL is waived off and material will be accepted based on MTC of approved sub vendor.

ii) In case material is procured from dealer and co related TC's are not available, check on 100% quantity of plates will be performed on sample drawn from them at NABL certified/approved laboratory for chemical & physical properties, however dimensional check shall be witnessed by BHEL.

iii) BHEL reserves the right for conducting repeat test, if required.

iv) Photographs of packing of material before final dispatch is to submitted.

BHEL					
ENGINEERING			QUALITY		
	Sign & Date	Name		Sign & Date	Name
Prepared by:	11-2-2020	S. K. YADAV	Checked by:	11-2-2020	ASHISH PANIGRAHI
Reviewed by:	11.02.2020	SAYAN ROY	Reviewed by:	11/2/2020	R K JAISWAL

BIDDER/ SUPPLIER	
Sign & Date	
Seal	

FOR CUSTOMER REVIEW & APPROVAL			
Doc No:			
	Sign & Date	Name	Seal
Reviewed by:			
Approved by:			

	MANUFACTURER/BIDDER/ SUPPLIER NAME & ADDRESS	QUALITY PLAN		SPEC. NO : PE-TS-XXX-167-A001	DATE: XX.XX.XX
		CUSTOMER :		QP NO.: PE-QAP-XXX-167-A001(PI)	DATE: 11.02.2020
		PROJECT:		PO NO.: LATER	DATE: XX.XX.XX
		ITEM: PIPE FITTINGS ,FLANGES & ACCESSORIES	SYSTEM: MISC.TANKS (SITE FABRICATED)	SECTION:	SHEET 1 OF 1

SL NO.	COMPONENT & OPERATIONS	CHARACTERISTICS	CLASS	TYPE OF CHECK	QUANTUM OF CHECK		REFERENCE DOCUMENT	ACCEPTANCE NORMS	FORMAT OF RECORD	AGENCY			REMARKS
1	2	3	4	5	6		7	8	9	**			
					M	C/ N			*D	M	C	N	
1	Pipes Fittings, Flanges & Accessories	Check for Type, Model No., Tag No.,	MI	Visual	100%		As per Approved Data Sheet/ Tech spec.	As per Approved Data Sheet/ Tech spec.	Inspection Report	P	V	V	
2		Dimensions	MI	Dimensional	100%		As per Approved Data Sheet/ Tech spec.	As per Approved Data Sheet/ Tech spec.	Inspection Report	P	V	V	
3		Physical and chemical Properties	MI	Review of TC	For Lot		As per Approved Data Sheet/ Tech spec.	As per Approved Data Sheet/ Tech spec.	Mfgr. TC	P	V	V	
4		Hydro test	MA	Hydro Test	100%		As per Approved Data Sheet/ Tech spec.	As per Approved Data Sheet/ Tech spec.	Inspection Report	P	V	V	

NOTES:

1. BHEL reserves the right for conducting repeat test, if required.
2. Photographs of packing of material before final dispatch is to submitted.

LEGENDS:
*RECORDS, INDENTIFIED WITH "TICK"(√) SHALL BE ESSENTIALLY INCLUDED BY SUPPLIER IN QA DOCUMENTATION,
** **M**: SUPPLIER/ MANUFACTURER/ SUB-SUPPLIER, **C**: MAIN SUPPLIER/ BHEL/ THIRD PARTY INSPECTION AGENCY, **N**: CUSTOMER,
P: PERFORM, **W**: WITNESS, **V**: VERIFICATION, AS APPROPRIATE
MA: MAJOR, **MI**: MINOR, **CR**: CRITICAL

BHEL					
ENGINEERING			QUALITY		
	Sign & Date	Name		Sign & Date	Name
Prepared by:	11.2.2020	S. K. YADAV	Checked by:	11.02.2020	ASHISH PANIGRAHI
Reviewed by:	11.02.2020	SAYAN ROY	Reviewed by:	11/2/2020	R K JAISWAL

BIDDER/ SUPPLIER	
Sign & Date	
Seal	

FOR CUSTOMER REVIEW & APPROVAL			
Doc No:			
	Sign & Date	Name	Seal
Reviewed by:			
Approved by:			

बी एच ई एल BHEL	CONTRACTOR'S NAME & ADDRESS	MANUFACTURING QUALITY PLAN		PROJECT
		ITEM : RUBBER LINING OF PIPING CONFORMING TO Tech Spec.	Q.P.No:7374QPC01 REV-01	PACKAGE
		BHEL Customer No. : 7374,7391& 7392	Dt- 13.02.2019	CONTRACT No.: MAIN-SUPPLIER

S.No	COMPONENT & OPERATIONS	CHARACTRISTICS	CLASS	TYPE OF CHECK	QUANTUM OF CHECK M	REFERENCE DOCUMENT	ACCEPTANCE NORMS	FORMAT OF RECORDS	D*	AGENCY M	AGENCY C	AGENCY N	REMARKS
1	2	3	4	5	6	7	8	9	10	** 11			12
1.0	**RAW MATERIAL**												
1.1	Rubber Mix	a. Tensile Strength b. % Elongation c. Specific Gravity d. Hardness e. Thickness of Sheet	Major	Verfication	1 sample/lot	As per Tech Spec./Relevant IS , Material Spec.		TC	√	P	V	-	TC - Test Certificate
		f. Resistance to Bleeding #	Major	Chemical	1 sample/lot	Immersion for 24 hours @40 deg C in 10% of H2SO4 and 10% of HNO3	No discoloration and Weight change -0% +4%	TC	√	P	V	-	# TC shall be from NABL approved lab.
2.0	**INPROCESS INSPECTION**												
2.1	Surface Preparation	Cleanliness & Uniformity	Major	Visual	100%	IS 4682 Part I , Sa 2.5 Grade Surface Finish		TC	-	P	V	-	
2.2	Continuity of Lining at Uncured stage	Spark test	Major	Visual	100%	IS 4682 Part I		TC	-	P	V	-	
2.3	Curing of Rubber Lining	Control of Pressure,Temperature & Time	Major	Visual	100%	IS 4682 Part I and Manufacturer's Procedure		Log Book	-	P	V	-	
3.0	**FINAL INSPECTION**												
3.1	Complete Lining	a. Surface Defects	Major	Visual	100%	IS 4682 Part I		IR	√	P	W	-	
		b. Shore Hardness	Major	Measurement	Random	IS 4682 Part I		IR	√	P	W	-	
		c. Spark Test	Critical	Visual	100%	IS 4682 Part I		IR	√	P	W	-	
		d. Rubber lining Thickness	Major	Measurement	Random	IS 4682 Part I		IR	√	P	W	-	
		e. Adhesion Test	Critical	Peel-Off test	One sample per Vulc. Lot	IS 4682 Part I		IR	√	P	W	-	
4.0	**Documentation**	Review of Reports	Major	Verification	100%	All reports required as per QP.				P	V	-	

LEGEND:

* RECORDS, INDENTIFIED WITH "TICK" (√) SHALL BE ESSENTIALLY INCLUDED BY SUPPLIER IN QA DOCUMENTATION.

** M:MANUFACTURER/SUB-SUPPLIER,C: BHEL/BHEL AUTHORISED AGENCY, N: NTPC, P: PERFORM W: WITNESS AND V: VERIFICATION

CHP: NTPC SHALL IDENTIFY IN COLOUM 'N' AS 'W'

PREPARED BY	APPROVED BY	FOR NTPC USE:	DOC.NO. 6130-109-QVM-Q-012 Rev 01 CAT...		
MAIN-SUPPLIER					
SIGNATURE	PAGE 01 OF 02		REVIEWED BY	APPROVED BY	APPROVAL SEAL

	CONTRACTOR'S NAME & ADDRESS	MANUFACTURING QUALITY PLAN		PROJECT :
बी एच ई एल BHEL		ITEM : RUBBER LINING OF PIPING CONFORMING TO IS 4682 PART I. BHEL Customer No. : 7374,7391& 7392	Q.P.No:7374QPC01 REV-01 Dt- 13.02.2019	PACKAGE CONTRACT No.: MAIN-SUPPLIER

S.No	COMPONENT & OPERATIONS	CHARACTRISTICS	CLASS	TYPE OF CHECK	QUANTUM OF CHECK	REFERENCE DOCUMENT	ACCEPTANCE NORMS	FORMAT OF RECORDS	D*	AGENCY			REMARKS
					M					M	C	N	
1	2	3	4	5	6	7	8	9	10	** 11			12

NOTES:

1. **Rubber Lining Vendor's Name & Address

a. M/s Lebracs Rubber Linings Private Limited ; Works Address : No16, Sedrapet, Puducherry-605111

b. M/s Jasmino Polymertech Pvt Ltd ; Works Address : L-61, MIDC Industrial Area, Taloja, Dist-Raigad, Maharashtra -410208

2. NTPC Inspection Category : Cat III
3. Repair, if any, should be carried out by same as per original rubber.
4. Adhesion test coupon shall be as prepared as per governing code.
5. NTPC Surveillance check may be carried out, if required.

		LEGEND: * RECORDS, INDENTIFIED WITH "TICK" (∨) SHALL BE ESSENTIALLY INCLUDED BY SUPPLIER IN QA DOCUMENTATION. ** M: MANUFACTURER/SUB-SUPPLIER, C: BHEL / BHEL AUTHORISED AGENCY, N: NTPC, P: PERFORM W: WITNESS AND V: VERIFICATION		DOC.NO. 6130-109-RVM-R-012 REV01.		CAT...
PREPARED BY	APPROVED BY					
MAIN-SUPPLIER						
SIGNATURE	PAGE 02 OF 02		FOR NTPC USE:	REVIEWED BY	APPROVED BY	APPROVAL SEAL

ANNEXURE-III
INPUT DRAWINGS (GAD OF TANKS)

Sl. No.	Drawing Title	Drawing No.
1.	General Arrangement of Primary Hydro cyclone Feed Tank	SKETCH-01
2.	General Arrangement of Filtrate Water Tank	SKETCH-02
3.	General Arrangement of Secondary Hydro cyclone Feed Tank	SKETCH-03
4.	General Arrangement of Waste Water Tank	SKETCH-04
5.	General Arrangement of Limestone Slurry Storage Tank	SKETCH-05
6.	General Arrangement of Auxiliary Absorbent(Storage) Tank	SKETCH-06
7.	General Arrangement of Process Water Tank	SKETCH-07
8.	General Arrangement of Belt Filter Water Tank	SKETCH-08
9.	General Arrangement of Clarified (Cake wash) Water Tank	SKETCH-09
10.	General Arrangement Drawing (typical) for Drain pit (Limestone area drain pit, Gypsum Area Drain pit, Absorber Area Drain pit)	SKETCH-10

Note:

1. ALL THE REQUIREMENTS SHOWN UNDER GA DRAWING ARE BARE MINIMUM, ANY OTHER ITEM FOUND APPLICABLE DURING DETAILED ENGINEERING AS PER TECHNICAL SPECIFICATION/ DESIGN CODE/ FUNCTIONAL REQUIREMENT SHALL BE SUPPLIED BY BIDDER WITHOUT ANY COMMERCIAL IMPLICATION TO BHEL.

2. LOAD DATA SHOWN UNDER GA DRAWING ARE BARE MINIMUM. THE SAME SHALL BE FINALISED DURING DETAIL ENGG.

3. FOR DETAILS OF PLATFORM FOR AGITATORS AND MOUNTING ARRANGEMENT OF AGITATOR REFER SECTION-III, ANNEXURE-8 OF THE TECHNICAL SPECIFICATION

DRAWING NO. SKETCH-01

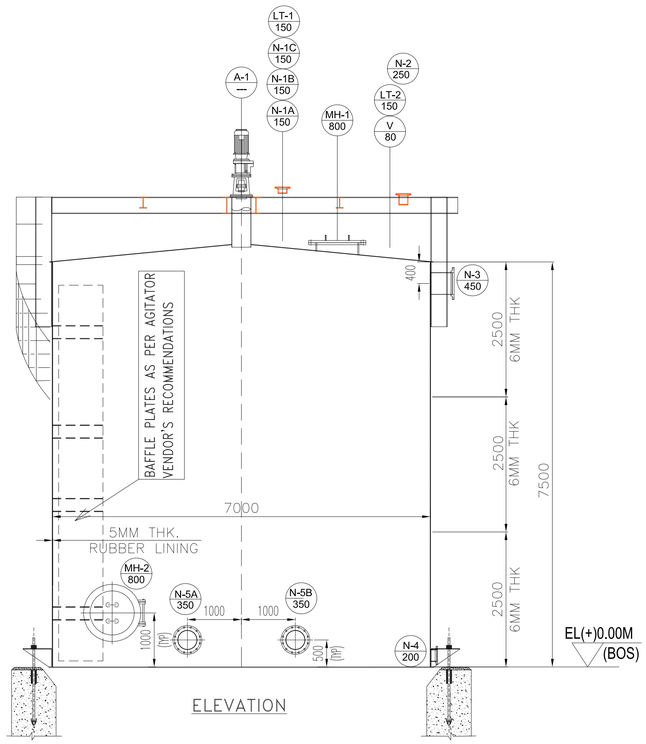

ELEVATION

* – THIS HEIGHT WILL BE DECIDED BASED ON AGITATOR VENDOR RECOMMENDATION

DESIGN DATA		
DESIGN CODE	–	IS:803 1976 (REAFFIRMED 2013)
STORAGE PRODUCT	–	ABSORBER BLEED
TANK CAPACITY (HOLD VOLUMNE)	M^3	269.40
TANK CAPACITY (EFFECTIVE)	M^3	215.51
TYPE OF TANK	–	VERTICAL CYLINDRICAL FIXED CONE ROOF
ROOF SLOPE	–	5°
DESIGN PRESSURE	–	HYDROSTATIC HEAD
OPERATING PRESSURE	–	ATMOSPHERIC
OPERATING TEMPERATURE	°C	63
HYDOR TESTING	–	WATER FILLED HEAD UPTO OVERFLOW NOZZLE
JOINT EFFECIENCY	–	0.7
RADIOGRAPHY	–	NO APPLICABLE
CORROSION ALLOWANCE	MM	1.5MM FOR SHELL AND BOTTOM PLATE
WIND CODE	–	AS PER CONTRACT SPECIFICATION
SEISMIC CODE	–	AS PER CONTRACT SPECIFICATION
NO. OF TANK	NO.	01
DIAMETER (I.D)	MM	7000
HEIGHT	MM	7500
ROOF PLATE THICKNESS	MM	8
SHELL PLATE THICKNESS	MM	6 (REFER ELEVATION)
BOTTOM PLATE THICKNESS	MM	8
INSULATION	–	NOT APPLICABLE
INSIDE LINING	–	5MM THICK OF BEST QUALITY BROMINE BUTYL RUBBER LINING WITH HARDNESS 55±5 (SHORE A HARDNESS)

NOZZLE SCHEDULE

NOZZLE			QTY	FLANGE			SERVICE	REMARKS
MARK	SIZE	Sch. No.		RATING	FACING	STANDARD		
A–1	–	–	1	–	–	–	AGITATOR	
MH–1	NB800	–	1	–	SOFF	PLATE	MANHOLE	WITH HINGE
MH–2	NB800	–	1	PLATE	SOFF	–	MANHOLE	
N–1A/B/C	NB150	–	3	150	SOFF	ANSI B16.5	LIQUID INLET	
N–2	NB250	–	1	150	SOFF	ANSI B16.5	MINIMUM FLOW	
N–3	NB450	–	1	150	SOFF	ANSI B16.5	OVER FLOW	
LT–1&2	NB150	–	2	150	SOFF	ANSI B16.5	LEVEL TRANSMITTER	
V	NB80	–	1	150	SOFF	ANSI B16.5	VENT	
N–4	NB200	–	1	150	SOFF	ANSI B16.5	BOTTOM DRAIN	
N–5A/B	NB350	–	2	150	SOFF	ANSI B16.5	PUMP SUCTION	

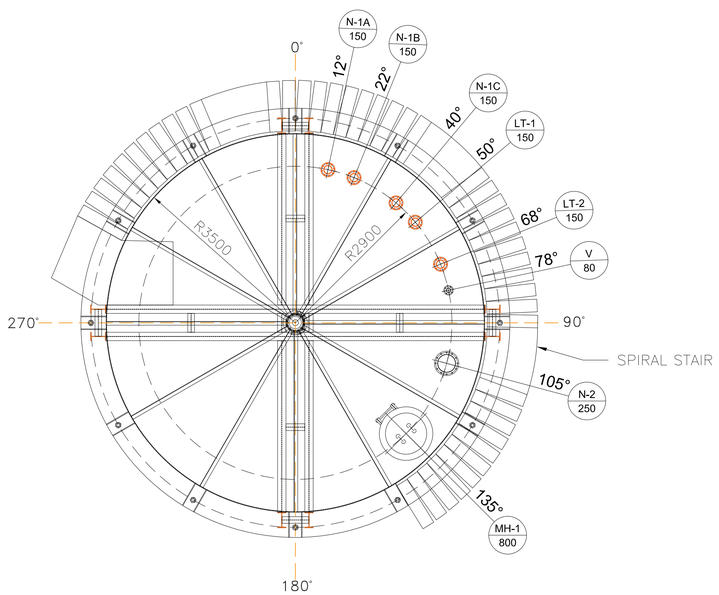

PLAN

MATERIAL SPECIFICATION	
ITEM	MATERIAL
SHELL, ROOF, BASE AND BAFFLE PLATE	IS:2062 E250 GRADE BR
STRUCTURES	IS:2062 E250 GRADE A/BR
STAIRWAYS & PLTFS	IS:2062 E250 GRADE A/BR
MANHOLE	IS:2062 E250 GRADE BR
NOZZLE	A106 Gr B
NOZZLE FLANGES	IS:2062 E250 GRADE BR
NOZZLE REINFORCEMNT	IS:2062 E250 GRADE BR
NOZZLE NECKS	IS:1239
HAND RAILING	IS:1161
GASKETS	BUTYL RUBBER
BOLT	IS: 1367 CLASS 4.4
FITTINGS	A–105
EARTHING LUG	IS:2062 E250 GRADE BR
ANCHOR BOLT	IS:2062 E250 GRADE BR

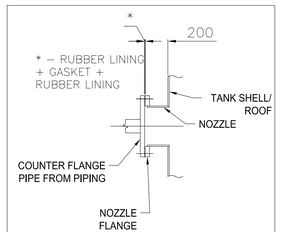

NOZZLE/FLANGE CONNECTION (TYPICAL)

NOTES:

1. ALL DIMENSIONS ARE IN MM, UNLESS SPECIFIED OTHERWISE.
2. OUTSIDE NOZZLE PROJECTION IS 200MM UNLESS OTHERWISE SPECIFIED.
3. NOZZLE REINFORCEMENTS SHALL BE AS PER IS:803.
4. NOZZLE PROJECTIONS ARE MEASURED FROM TANK SHELL INNER TO THE FLANGE FACE AS APPLICABLE.
5. ALL REINFORCEMENT PADS SHALL BE PROVIDED WITH 6MM TELLTALE HOLE.
6. NOZZLE AND FLANGE DETAILS SHALL BE AS PER IS803.
7. ALL BOLT HOLES SHALL STRADDLE VERTICAL CENTERLINES ON SHELL AND RADIAL CENTERLINES ON ROOF.
8. ALL PROTRUSIONS, SHARP EDGES AND SPATTER, ETC. SHALL BE REMOVED FROM THE SURFACE AND ALL WELDS GROUND SMOOTH WITHOUT ANY CAVITIES AND IMPERFECTION BEFORE LINING.
9. HYDRO TEST SHALL BE AS PER IS803. LINING SHALL BE CARRIED–OUT AFTER HYDRO TEST.
10. ALL LONGITUDINAL JOINTS SHALL BE STAGGERED.
11. BOTTOM PLATE SHALL UNIFORMLY REST ON THE FOUNDATION.
12. THE MINIMUM SIZE OF WELD SHALL BE EQUAL TO THE THICKNESS OF THINNER MEMBER JOINT UNLESS SPECIFIED OTHERWISE.
13. EARTHING LUG SHALL BE WELDED TO TANK BODY AT SITE TO SUIT SITE REQUIREMENT.

** AGITATOR SHOWN ARE INDICATIVE WILL BE FINALIZED DURING DETAIL ENGINEERING.
*** NOZZLE LOCATION SHOWN IN DRAWING ARE INDICATIVE WILL BE FINALIZED DURING DETAIL ENGINEERING.

REV.	DATE	ALTD.	CKD.	APPD.
–	–	–	–	–

CAUTION: THIS DRAWING IS THE PROPERTY OF BHARAT HEAVY ELECTRICALS LIMITED. IT IS NOT TO BE REPRODUCED OR USED TO OTHERS WITHOUT AUTHORISATION OF BHARAT HEAVY ELECTRICALS LIMITED. DRAWINGS OF APPARATUS EXCEPT WHERE PROVIDED FOR AGREEMENT WITH SAID COMPANY.

NTPC DRG. No.

PROJECT: 3X660MW NABINAGAR STPP (SYSTEM : FLUE GAS DESULPHURIZATION)

CUSTOMER: NTPC LIMITED. (A GOVERNMENT OF INDIA ENTERPRISE)

BHARAT HEAVY ELECTRICALS LIMITED. UNIT: BOILER AUXILIARIES PLANT, RANIPET-632 406.

DEPT CODE		NAME	SIGN	DATE
M	DRN			
	CHD			
	APPD			

TITLE: GENERAL ARRANGEMENT OF PRIMARY HYDROCYCLONE FEED TANK

SCALE : NTS

DRAWING NO. SKETCH–01 | SH 01 OF 02 | REV.00

Size A1

DRAWING NO. 2-FW-000-00399

ALL DIMENSIONS ARE IN MM

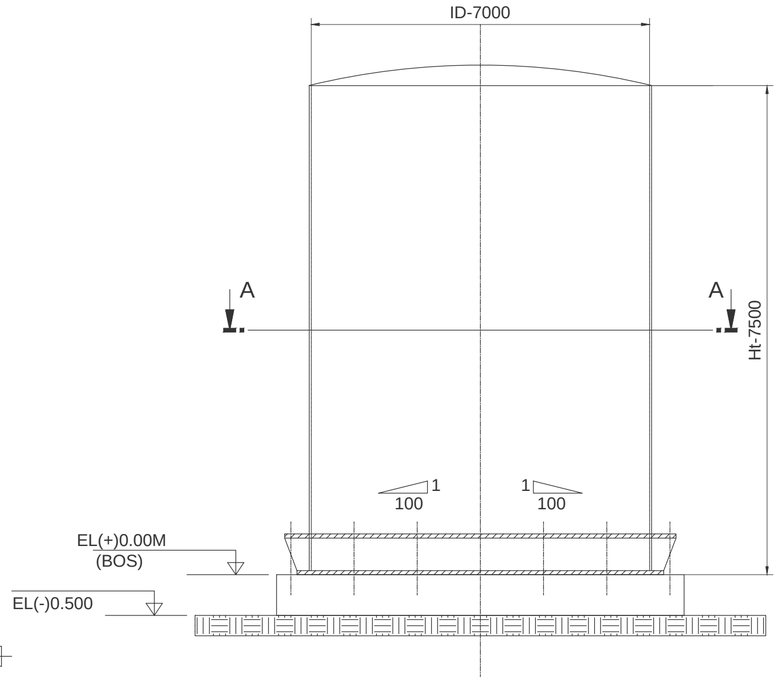

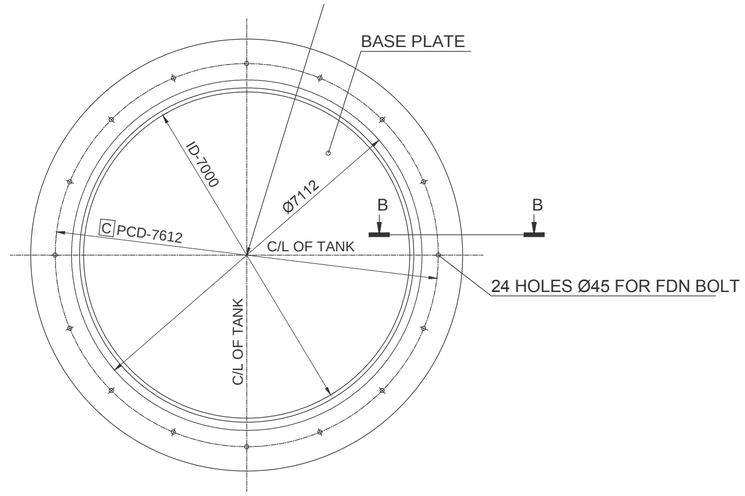

V I E W - AA

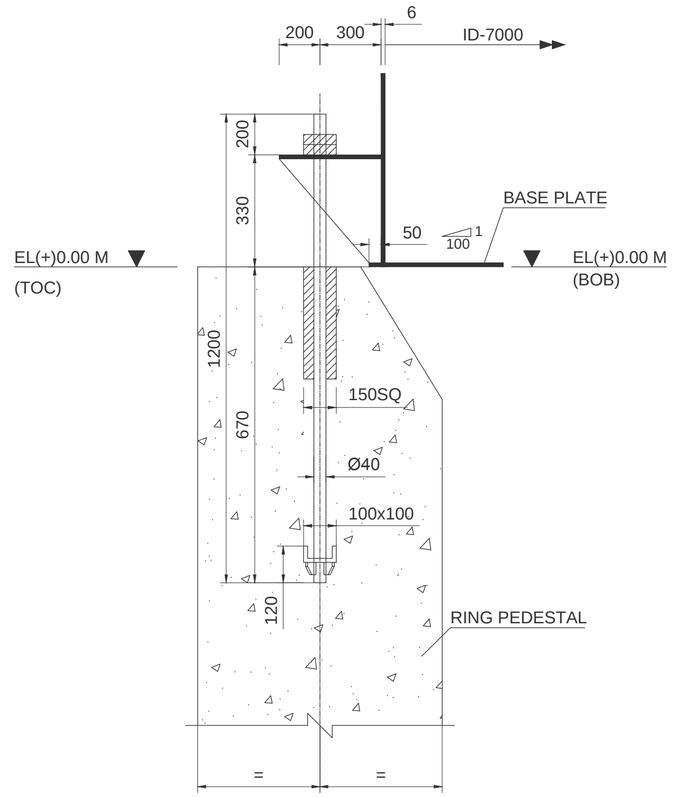

S E C T I O N - BB

N O T E S

01. NON-SHRINK CEMENTITIOUS FLOWABLE GROUT SHALL BE USED FOR GROUTING OF POCKETS AND SHALL BE ONE GRADE HIGHER THAN GRADE OF CONCRETE USED IN FOUNDATION.

02. MINIMUM GRADE OF CONCRETE USED FOR FOUNDATION SHALL BE M25.

03. -VOID

04. -VOID

05. -VOID

06. CIVIL FOUNDATION FOR TANK SHALL BE AS PER IS 803.

LEGEND :

BOS - BOTTOM OF STEEL	BOB - BOTTOM OF BASE PLATE
PCD - PITCH CIRCLE DIAMETER	TOC - TOP OF CONCRETE
T - TONS	PL - PAVEMENT LEVEL
T-M - TONNE METER	C - CRITICAL DIMENSION

LOAD DATA :

Empty Weight, We (T)	21
Operating Weight, Wo (T)	382
Max Horizontal Force, H (T)	
Due to Wind	9
Due to Seismic	78
Max Moment, M (T-m)	
Due to Wind	33
Due to Seismic (Ringwall Moment)	226

NUMBER OF TANK (s) = 01

CAUTION: THE DRAWING IS THE PROPERTY OF BHARAT HEAVY ELECTRICALS LTD.AND IS NOT TO BE REPRODUCED OR USED TO FURNISH ANY INFORMATION FOR MAKING OF DRAWINGS OF APPARATUS EXCEPT WHERE PROVIDED FOR AGREEMENT WITH SAID COMPANY.

NTPC LTD.
3x660 MW NABINAGAR STPP
FGD SYSTEM PACKAGE

BHARAT HEAVY ELECTRICALS LIMITED.

DEPT CODE		NAME	SIGN	DATE
M	DRN			
	CHD			
	APPD			

TITLE: FOUNDATION LOADING OF PRIMARY HYDROCYCLONE FEED TANK

DRAWING NO. SKETCH-01 | SCALE : NTS | SHEET 2 OF 2 | REV 00

SIZE A2

DRAWING NO. SKETCH-02

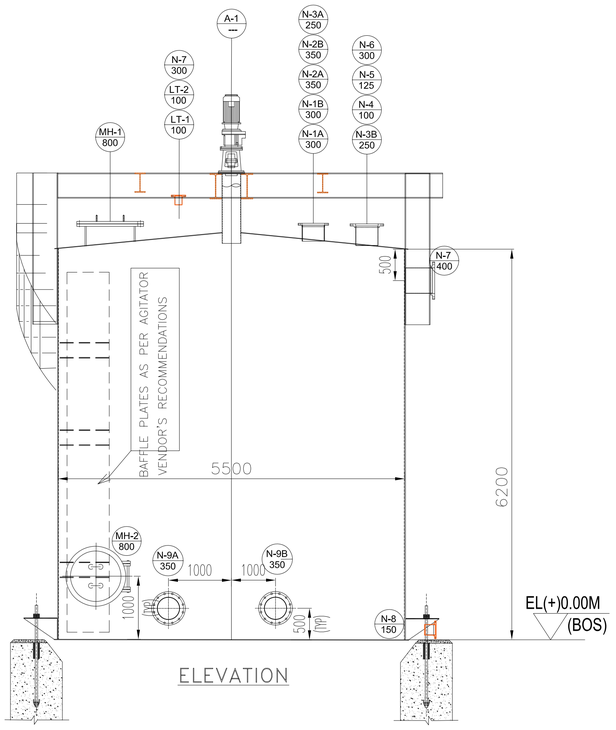

ELEVATION

DESIGN DATA		
DESIGN CODE	–	IS:803 1976 (REAFFIRMED 2013)
STORAGE PRODUCT	–	ABSORBER BLEED
TANK CAPACITY (HOLD VOLUMNE)	M^3	135.4
TANK CAPACITY (EFFECTIVE)	M^3	97.4
TYPE OF TANK	–	VERTICAL CYLINDRICAL FIXED CONE ROOF
ROOF SLOPE	–	5°
DESIGN PRESSURE	–	HYDROSTATIC HEAD
OPERATING PRESSURE	–	ATMOSPHERIC
OPERATING TEMPERATURE	°C	59
HYDOR TESTING	–	WATER FILLED HEAD UPTO OVERFLOW NOZZLE
JOINT EFFECIENCY	–	0.7
RADIOGRAPHY	–	NO APPLICABLE
CORROSION ALLOWANCE	MM	1.5MM FOR SHELL AND BOTTOM PLATE
WIND CODE	–	AS PER CONTRACT SPECIFICATION
SEISMIC CODE	–	AS PER CONTRACT SPECIFICATION
NO. OF TANK	NO.	01
DIAMETER (I.D)	MM	5500
HEIGHT	MM	6200
ROOF PLATE THICKNESS	MM	8
SHELL PLATE THICKNESS	MM	6 (REFER ELEVATION)
BOTTOM PLATE THICKNESS	MM	8
INSULATION	–	NOT APPLICABLE
INSIDE LINING	–	5MM THICK OF BEST QUALITY BROMINE BUTYL RUBBER LINING WITH HARDNESS 55±5 (SHORE A HARDNESS)

NOZZLE SCHEDULE

NOZZLE			QTY	FLANGE			SERVICE	REMARKS
MARK	SIZE	Sch. No.		RATING	FACING	STANDARD		
A–1	–	–	–	–	–	–	AGITATOR	
M–1	NB800	–	1	–	SOFF	PLATE	MANHOLE	WITH HINGE
M–2	NB800	–	1	PLATE	SOFF	–	MANHOLE	
N–1A/B	NB300	–	2	150	SOFF	ANSI B16.5	LIQUID INLET	
N–2A/B	NB350	–	2	150	SOFF	ANSI B16.5	LIQUID INLET	
N–3A/B	NB200	–	2	150	SOFF	ANSI B16.5	LIQUID INLET	
LT–1&2	NB150	–	2	150	SOFF	ANSI B16.5	LEVEL TRANSMITTER	
V	NB80	–	1	150	SOFF	ANSI B16.5	VENT	
N–4	NB100	–	1	150	SOFF	ANSI B16.5	LIQUID INLET	
N–5	NB125	–	1	150	SOFF	ANSI B16.5	LIQUID INLET	
N–6	NB300	–	1	150	SOFF	ANSI B16.5	LIQUID INLET	
N–7	NB400	–	1	150	SOFF	ANSI B16.5	OVER FLOW	
N–8	NB150	–	1	150	SOFF	ANSI B16.5	BOTTOM DRAIN	
N–9A/B	NB350	–	2	150	SOFF	ANSI B16.5	PUMP SUCTION	

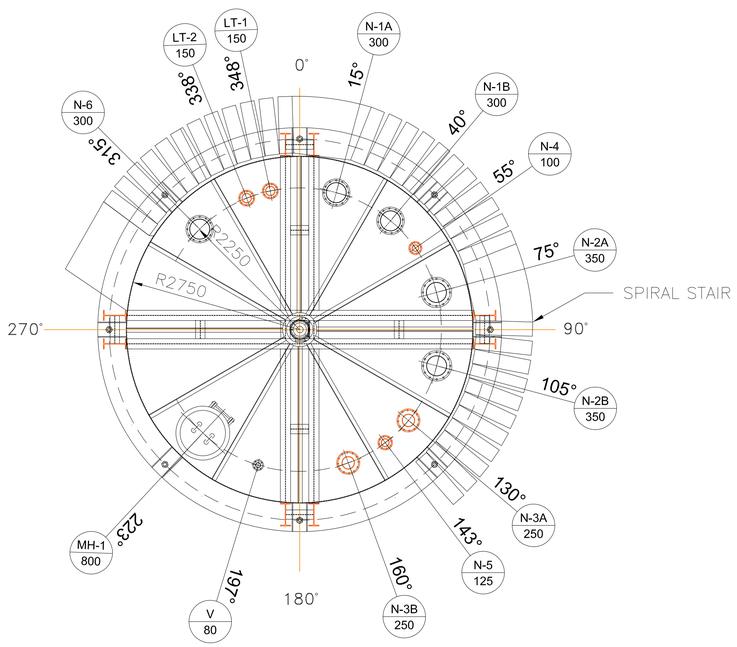

PLAN

MATERIAL SPECIFICATION	
ITEM	MATERIAL
SHELL, ROOF, BASE AND BAFFLE PLATE	IS:2062 E250 GRADE BR
STRUCTURES	IS:2062 E250 GRADE A/BR
STAIRWAYS & PLTFS	IS:2062 E250 GRADE A/BR
MANHOLE	IS:2062 E250 GRADE BR
NOZZLE	A106 Gr B
NOZZLE FLANGES	IS:2062 E250 GRADE BR
NOZZLE REINFORCEMNT	IS:2062 E250 GRADE BR
NOZZLE NECKS	IS:1239
HAND RAILING	IS:1161
GASKETS	BUTYL RUBBER
BOLT	IS: 1367 CLASS 4.4
FITTINGS	A–105
EARTHING LUG	IS:2062 E250 GRADE BR
ANCHOR BOLT	IS:2062 E250 GRADE BR

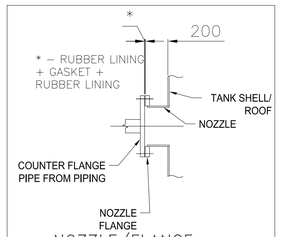

NOZZLE/FLANGE CONNECTION (TYPICAL)

NOTES:

1. ALL DIMENSIONS ARE IN MM, UNLESS SPECIFIED OTHERWISE.
2. OUTSIDE NOZZLE PROJECTION IS 200MM UNLESS OTHERWISE SPECIFIED.
3. NOZZLE REINFORCEMENTS SHALL BE AS PER IS:803.
4. NOZZLE PROJECTIONS ARE MEASURED FROM TANK SHELL INNER TO THE FLANGE FACE AS APPLICABLE.
5. ALL REINFORCEMENT PADS SHALL BE PROVIDED WITH 6MM TELLTALE HOLE.
6. NOZZLE AND FLANGE DETAILS SHALL BE AS PER IS803.
7. ALL BOLT HOLES SHALL STRADDLE VERTICAL CENTERLINES ON SHELL AND RADIAL CENTERLINES ON ROOF.
8. ALL PROTRUSIONS, SHARP EDGES AND SPATTER, ETC. SHALL BE REMOVED FROM THE SURFACE AND ALL WELDS GROUND SMOOTH WITHOUT ANY CAVITIES AND IMPERFECTION BEFORE LINING.
9. HYDRO TEST SHALL BE AS PER IS803. LINING SHALL BE CARRIED–OUT AFTER HYDRO TEST.
10. ALL LONGITUDINAL JOINTS SHALL BE STAGGERED.
11. BOTTOM PLATE SHALL UNIFORMLY REST ON THE FOUNDATION.
12. THE MINIMUM SIZE OF WELD SHALL BE EQUAL TO THE THICKNESS OF THINNER MEMBER JOINT UNLESS SPECIFIED OTHERWISE.
13. EARTHING LUG SHALL BE WELDED TO TANK BODY AT SITE TO SUIT SITE REQUIREMENT.

** AGITATOR SHOWN ARE INDICATIVE WILL BE FINALIZED DURING DETAIL ENGINEERING.
*** NOZZLE LOCATION SHOWN IN DRAWING ARE INDICATIVE WILL BE FINALIZED DURING DETAIL ENGINEERING.

REV.	DATE	ALTD.	CKD.	APPD.
–	–	–	–	–

CAUTION: THIS DRAWING IS THE PROPERTY OF BHARAT HEAVY ELECTRICALS LIMITED. IT IS NOT TO BE REPRODUCED OR COPIED, NOR IT IS TO BE DISPOSED OF OR MADE PUBLIC OF DRAWINGS OF APPARATUS EXCEPT WHERE PROVIDED FOR AGREEMENT WITH SAID COMPANY.

PROJECT: 3X660MW NABINAGAR STPP (SYSTEM : FLUE GAS DESULPHURIZATION)

CUSTOMER: NTPC LTD. (A GOVERNMENT OF INDIA ENTERPRISE)

BHARAT HEAVY ELECTRICALS LIMITED. UNIT: BOILER AUXILIARIES PLANT, RANIPET-632 406.

DEPT CODE: M		NAME	SIGN	DATE
	DRN			
	CHD			
	APPD			

TITLE: GENERAL ARRANGEMENT AND DATA SHEET OF FILTRATE WATER TANK

SCALE : NTS

DRAWING NO. SKETCH–02 | SH 01 OF 02 | REV.00

Size A1

DRAWING NO. 2-FW-000-00394

ALL DIMENSIONS ARE IN MM

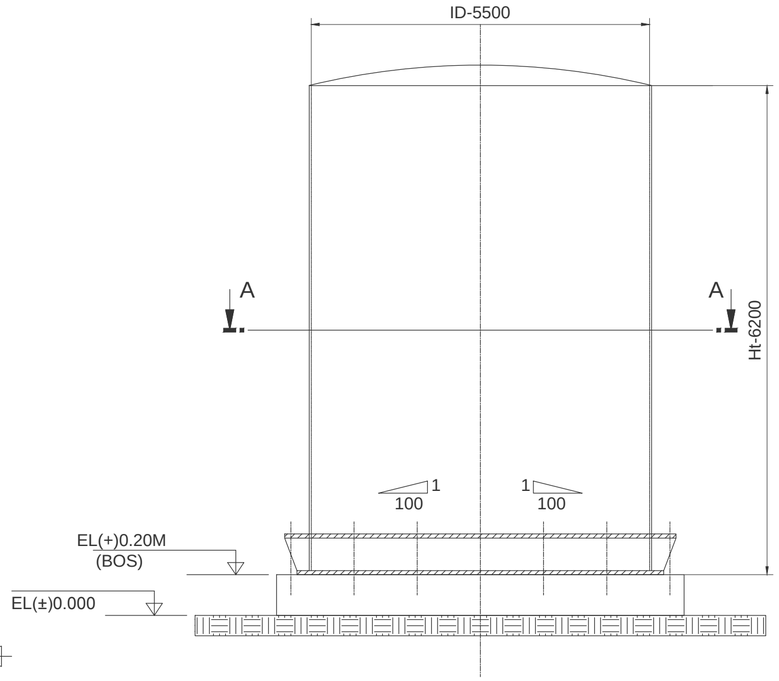

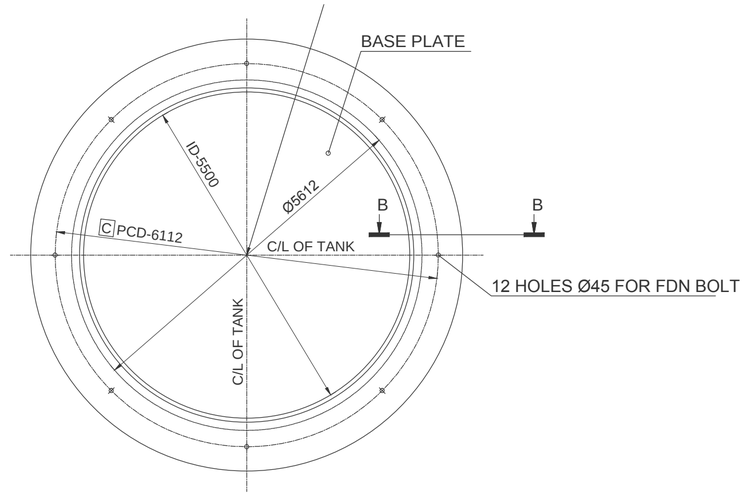

V I E W - AA

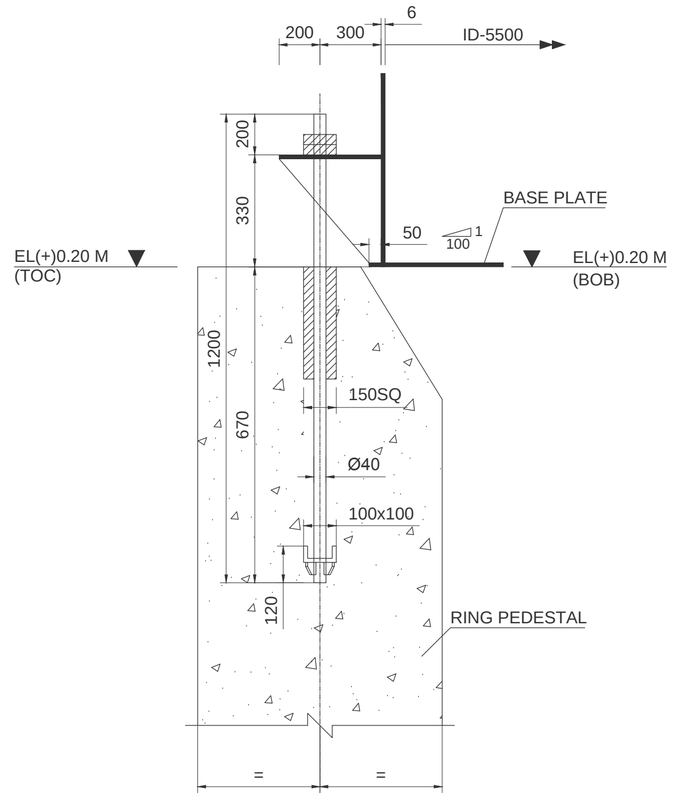

S E C T I O N - BB

N O T E S

01. NON-SHRINK CEMENTITIOUS FLOWABLE GROUT SHALL BE USED FOR GROUTING OF POCKETS AND SHALL BE ONE GRADE HIGHER THAN GRADE OF CONCRETE USED IN FOUNDATION.

02. MINIMUM GRADE OF CONCRETE USED FOR FOUNDATION SHALL BE M25.

03. -VOID

04. -VOID

05. -VOID

06. CIVIL FOUNDATION FOR TANK SHALL BE AS PER IS 803.

LEGEND :

BOS - BOTTOM OF STEEL	BOB - BOTTOM OF BASE PLATE
PCD - PITCH CIRCLE DIAMETER	TOC - TOP OF CONCRETE
T - TONS	PL - PAVEMENT LEVEL
T-M - TONNE METER	C - CRITICAL DIMENSION

LOAD DATA :

Empty Weight, We (T)	16
Operating Weight, Wo (T)	185
Max Horizontal Force, H (T)	
Due to Wind	6
Due to Seismic	37
Max Moment, M (T-m)	
Due to Wind	18
Due to Seismic (Ringwall Moment)	89

NUMBER OF TANK (s) = 01

CAUTION: THE DRAWING IS THE PROPERTY OF BHARAT HEAVY ELECTRICALS LTD.AND IS NOT TO BE REPRODUCED OR USED TO FURNISH ANY INFORMATION FOR MAKING OF DRAWINGS OF APPARATUS EXCEPT WHERE PROVIDED FOR AGREEMENT WITH SAID COMPANY.

NTPC LTD.
3x660 MW NABINAGAR STPP
FGD SYSTEM PACKAGE

BHARAT HEAVY ELECTRICALS LIMITED.

DEPT CODE		NAME	SIGN	DATE
M	DRN			
	CHD			
	APPD			

TITLE: FOUNDATION LOADING OF FILTER WATER TANK

DRAWING NO.	SCALE : NTS		
SKETCH-02		SHEET 2 OF 2	REV 00

SIZE A2

DRAWING NO.SKETCH-03

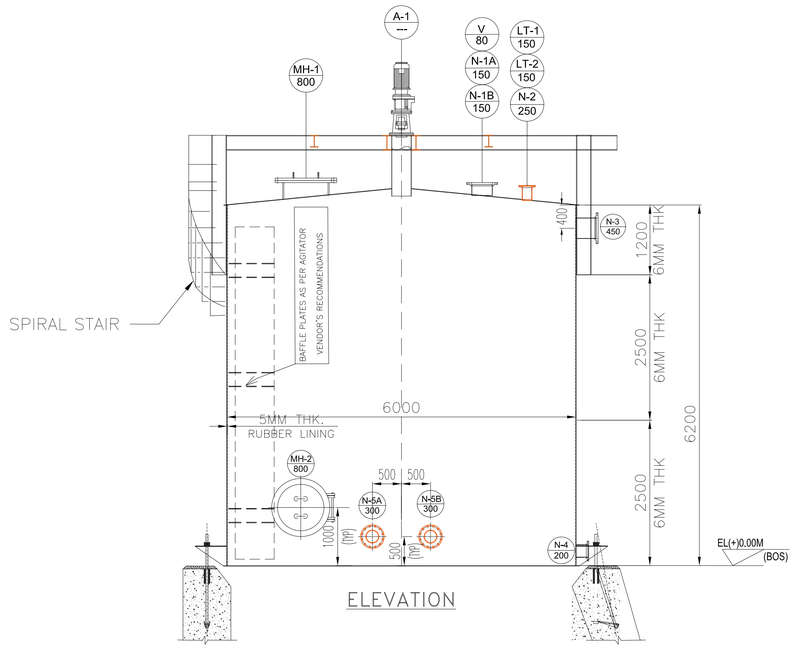

ELEVATION

DESIGN DATA		
DESIGN CODE	–	IS:803 1976 (REAFFIRMED 2013)
STORAGE PRODUCT	–	GYPSUM SLURRY (UNDER FLOW FROM PRIMARY HYDRO CYCLONE)
TANK CAPACITY (HOLD VOLUMNE)	M^3	161.20
TANK CAPACITY (EFFECTIVE)	M^3	121.58
TYPE OF TANK	–	VERTICAL CYLINDRICAL FIXED CONE ROOF
ROOF SLOPE	–	5°
DESIGN PRESSURE	–	HYDROSTATIC HEAD
OPERATING PRESSURE	–	ATMOSPHERIC
OPERATING TEMPERATURE	°C	63
HYDOR TESTING	–	WATER FILLED HEAD UPTO OVERFLOW NOZZLE
JOINT EFFECIENCY	–	0.7
RADIOGRAPHY	–	NO APPLICABLE
CORROSION ALLOWANCE	MM	1.5MM FOR SHELL AND BOTTOM PLATE
WIND CODE	–	AS PER CONTRACT SPECIFICATION
SEISMIC CODE	–	AS PER CONTRACT SPECIFICATION
NO. OF TANK	NO.	01
DIAMETER (I.D)	MM	6000
HEIGHT	MM	6200
ROOF PLATE THICKNESS	MM	8
SHELL PLATE THICKNESS	MM	6 (REFER ELEVATION)
BOTTOM PLATE THICKNESS	MM	8
INSULATION	–	NOT APPLICABLE
INSIDE LINING	–	5MM THICK OF BEST QUALITY BROMINE BUTYL RUBBER LINING WITH HARDNESS 55±5 (SHORE A HARDNESS)

NOZZLE SCHEDULE

NOZZLE			QTY	FLANGE			SERVICE	REMARKS
MARK	SIZE	Sch. No.		RATING	FACING	STANDARD		
A–1	–	–	1	–	–	–	AGITATOR	
M–1	NB800	–	1	–	SOFF	PLATE	MANHOLE	WITH HINGE
M–2	NB800	–	1	PLATE	SOFF	–	MANHOLE	
N–1A/B	NB150	–	2	150	SOFF	ANSI B16.5	LIQUID INLET	
N–2	NB250	–	1	150	SOFF	ANSI B16.5	MINIMUM FLOW	
N–3	NB450	–	1	150	SOFF	ANSI B16.5	OVER FLOW	
LT–1&2	NB150	–	2	150	SOFF	ANSI B16.5	LEVEL TRANSMITTER	
V	NB80	–	1	150	SOFF	ANSI B16.5	VENT	
N–4	NB200	–	1	150	SOFF	ANSI B16.5	BOTTOM DRAIN	
N–5A/B	NB300	–	2	150	SOFF	ANSI B16.5	PUMP SUCTION	

* – THIS HEIGHT WILL BE DECIDED BASED ON AGITATOR VENDOR RECOMMENDATION

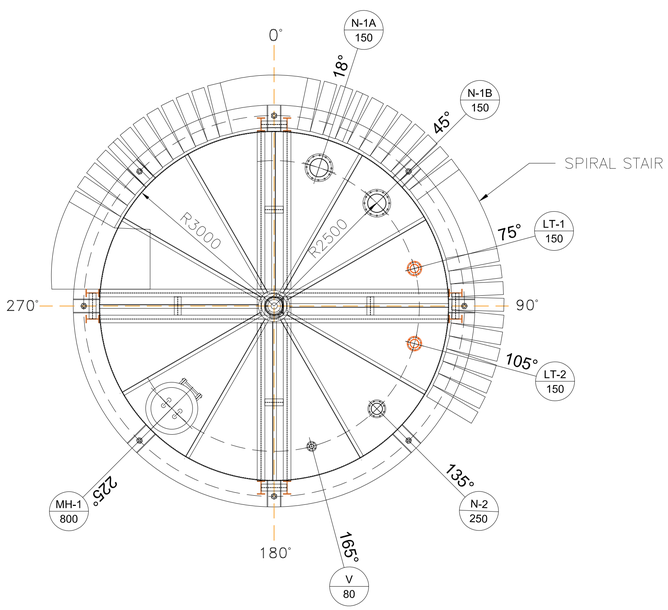

PLAN

MATERIAL SPECIFICATION	
ITEM	MATERIAL
SHELL, ROOF, BASE AND BAFFLE PLATE	IS:2062 E250 GRADE BR
STRUCTURES	IS:2062 E250 GRADE A/BR
STAIRWAYS & PLTFS	IS:2062 E250 GRADE A/BR
MANHOLE	IS:2062 E250 GRADE BR
NOZZLE	A106 Gr B
NOZZLE FLANGES	IS:2062 E250 GRADE BR
NOZZLE REINFORCEMNT	IS:2062 E250 GRADE BR
NOZZLE NECKS	IS:1239
HAND RAILING	IS:1161
GASKETS	BUTYL RUBBER
BOLT	IS: 1367 CLASS 4.4
FITTINGS	A–105
EARTHING LUG	IS:2062 E250 GRADE BR
ANCHOR BOLT	IS:2062 E250 GRADE BR

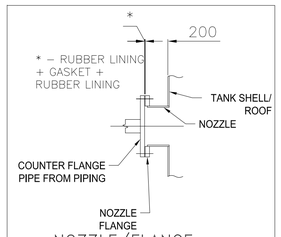

NOZZLE/FLANGE CONNECTION (TYPICAL)

NOTES:

1. ALL DIMENSIONS ARE IN MM, UNLESS SPECIFIED OTHERWISE.
2. OUTSIDE NOZZLE PROJECTION IS 200MM UNLESS OTHERWISE SPECIFIED.
3. NOZZLE REINFORCEMENTS SHALL BE AS PER IS:803.
4. NOZZLE PROJECTIONS ARE MEASURED FROM TANK SHELL INNER TO THE FLANGE FACE AS APPLICABLE.
5. ALL REINFORCEMENT PADS SHALL BE PROVIDED WITH 6MM TELLTALE HOLE.
6. NOZZLE AND FLANGE DETAILS SHALL BE AS PER IS803.
7. ALL BOLT HOLES SHALL STRADDLE VERTICAL CENTERLINES ON SHELL AND RADIAL CENTERLINES ON ROOF.
8. ALL PROTRUSIONS, SHARP EDGES AND SPATTER, ETC. SHALL BE REMOVED FROM THE SURFACE AND ALL WELDS GROUND SMOOTH WITHOUT ANY CAVITIES AND IMPERFECTION BEFORE LINING.
9. HYDRO TEST SHALL BE AS PER IS803. LINING SHALL BE CARRIED–OUT AFTER HYDRO TEST.
10. ALL LONGITUDINAL JOINTS SHALL BE STAGGERED.
11. BOTTOM PLATE SHALL UNIFORMLY REST ON THE FOUNDATION.
12. THE MINIMUM SIZE OF WELD SHALL BE EQUAL TO THE THICKNESS OF THINNER MEMBER JOINT UNLESS SPECIFIED OTHERWISE.
13. EARTHING LUG SHALL BE WELDED TO TANK BODY AT SITE TO SUIT SITE REQUIREMENT.

** AGITATOR SHOWN ARE INDICATIVE WILL BE FINALIZED DURING DETAIL ENGINEERING.
*** NOZZLE LOCATION SHOWN IN DRAWING ARE INDICATIVE WILL BE FINALIZED DURING DETAIL ENGINEERING.

REV.	DATE	ALTD.	CKD.	APPD.
–	–	–	–	–

CAUTION: THIS DRAWING IS THE PROPERTY OF BHARAT HEAVY ELECTRICALS LIMITED. IT IS NOT TO BE REPRODUCED OR COPIED TO OTHERS OR MADE USE OF FOR ANY PURPOSE OTHER THAN FOR WHICH IT IS LOANED. THE DESIGNS AND DRAWINGS OF APPARATUS EXCEPT WHERE PROVIDED FOR AGREEMENT WITH SAID COMPANY.

PROJECT: 3X660MW NABINAGAR STPP (SYSTEM : FLUE GAS DESULPHURIZATION)

CUSTOMER: NTPC LIMITD. (A GOVERNMENT OF INDIA ENTERPRISE)

BHARAT HEAVY ELECTRICALS LIMITED.

DEPT CODE		NAME	SIGN	DATE
M	DRN			
	CHD			
	APPD			

TITLE: GENERAL ARRANGEMENT AND DATA SHEET OF SECONDARY HYDROCYCLONE FEED TANK

SCALE : NTS

DRAWING NO. SKETCH–03 | SH 01 OF 02 | REV.00

Size A1

DRAWING NO. 2-FW-000-00396

ALL DIMENSIONS ARE IN MM

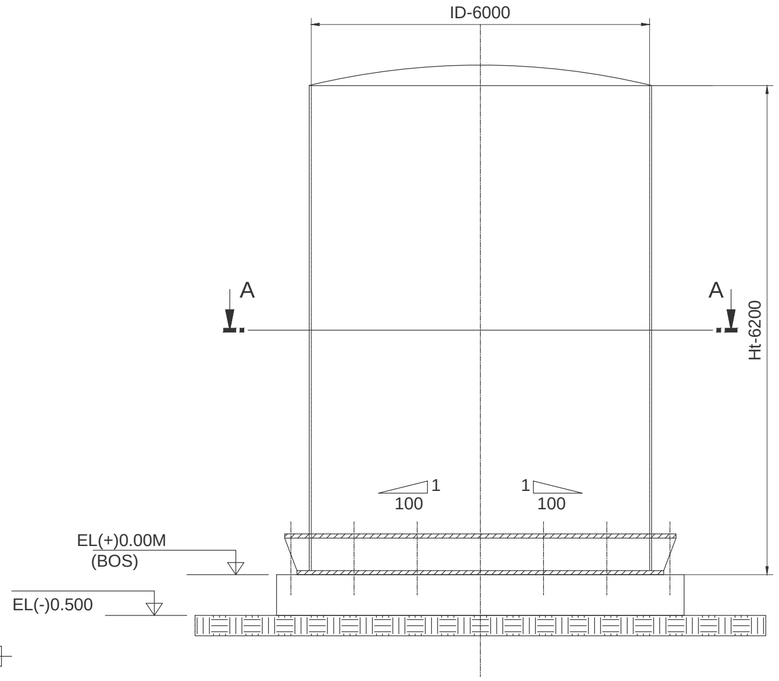

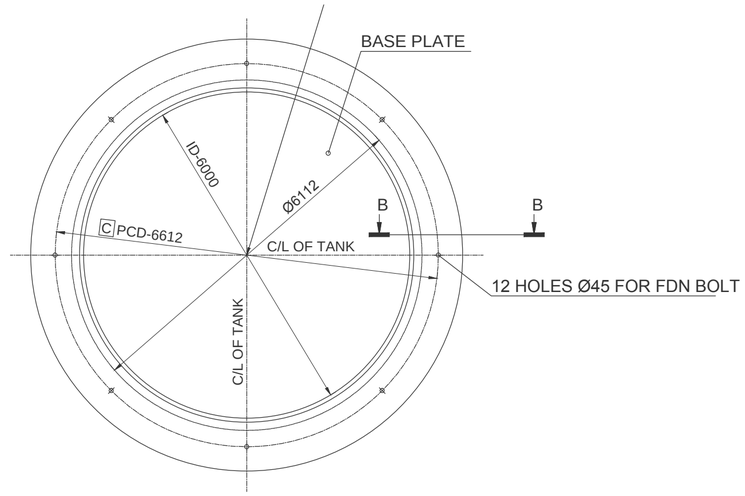

V I E W - AA

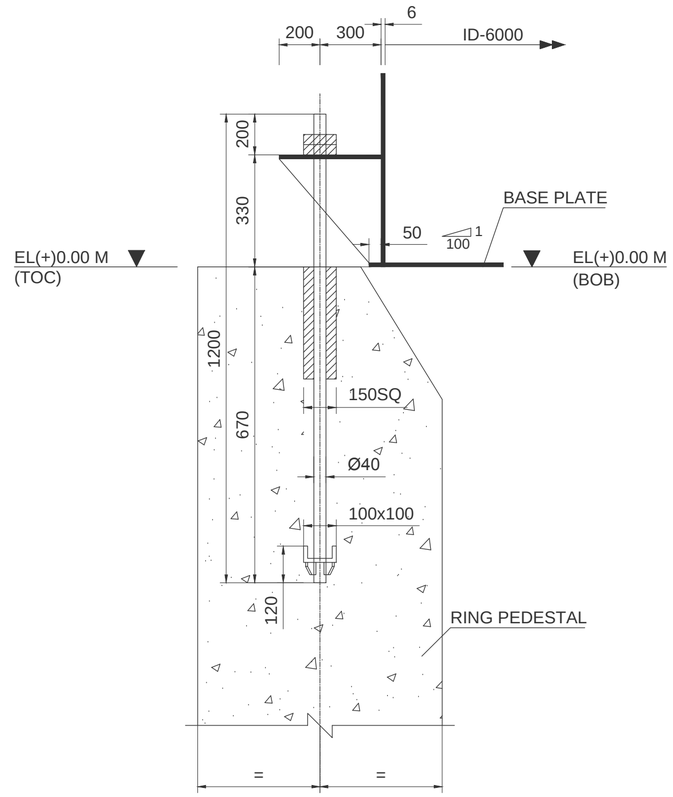

S E C T I O N - BB

N O T E S

01. NON-SHRINK CEMENTITIOUS FLOWABLE GROUT SHALL BE USED FOR GROUTING OF POCKETS AND SHALL BE ONE GRADE HIGHER THAN GRADE OF CONCRETE USED IN FOUNDATION.

02. MINIMUM GRADE OF CONCRETE USED FOR FOUNDATION SHALL BE M25.

03. -VOID

04. -VOID

05. -VOID

06. CIVIL FOUNDATION FOR TANK SHALL BE AS PER IS 803.

LOAD DATA :

Empty Weight, We (T)	17
Operating Weight, Wo (T)	219
Max Horizontal Force, H (T)	
Due to Wind	7
Due to Seismic	43
Max Moment, M (T-m)	
Due to Wind	20
Due to Seismic (Ringwall Moment)	105

LEGEND :

BOS - BOTTOM OF STEEL	BOB - BOTTOM OF BASE PLATE
PCD - PITCH CIRCLE DIAMETER	TOC - TOP OF CONCRETE
T - TONS	PL - PAVEMENT LEVEL
T-M - TONNE METER	C - CRITICAL DIMENSION

NUMBER OF TANK (s) = 01

CAUTION: THE DRAWING IS THE PROPERTY OF BHARAT HEAVY ELECTRICALS LTD.AND IS NOT TO BE REPRODUCED OR USED TO FURNISH ANY INFORMATION FOR MAKING OF DRAWINGS OF APPARATUS EXCEPT WHERE PROVIDED FOR AGREEMENT WITH SAID COMPANY.

NTPC LTD.
3x660 MW NABINAGAR STPP
FGD SYSTEM PACKAGE

BHARAT HEAVY ELECTRICALS LIMITED.

DEPT CODE		NAME	SIGN	DATE
M	DRN			
	CHD			
	APPD			

TITLE: FOUNDATION LOADING OF SECONDARY HYDROCYCLONE FEED TANK

DRAWING NO. SKETCH-03 | SCALE : NTS | SHEET 2 OF 2 | REV 00

SIZE A2

DRAWING NO. SKETCH-04

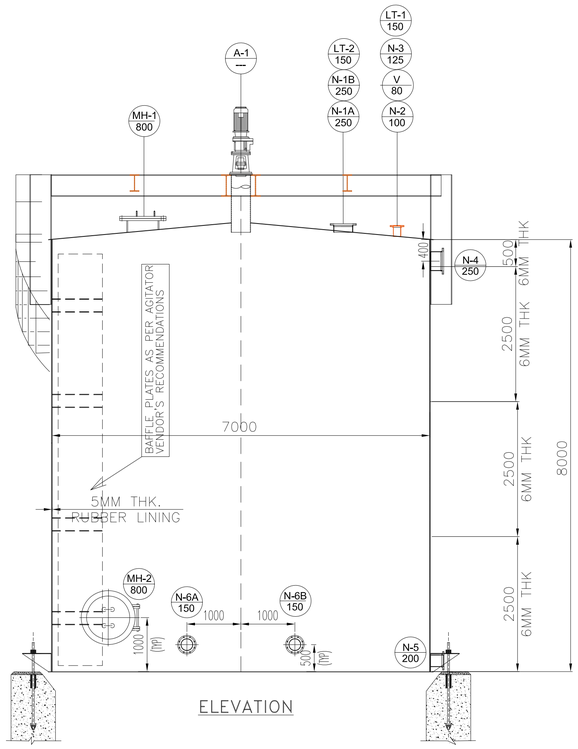

ELEVATION

DESIGN DATA		
DESIGN CODE	–	IS:803 1976 (REAFFIRMED 2013)
STORAGE PRODUCT	–	GYPSUM SLURRY
TANK CAPACITY (HOLD VOLUMNE)	M^3	288.6
TANK CAPACITY (EFFECTIVE)	M^3	234.75
TYPE OF TANK	–	VERTICAL CYLINDRICAL FIXED CONE ROOF
ROOF SLOPE	–	5°
DESIGN PRESSURE	–	HYDROSTATIC HEAD
OPERATING PRESSURE	–	ATMOSPHERIC
OPERATING TEMPERATURE	°C	45
HYDOR TESTING	–	WATER FILLED HEAD UPTO OVERFLOW NOZZLE
JOINT EFFECIENCY	–	0.7
RADIOGRAPHY	–	NO APPLICABLE
CORROSION ALLOWANCE	MM	1.5MM FOR SHELL AND BOTTOM PLATE
WIND CODE	–	AS PER CONTRACT SPECIFICATION
SEISMIC CODE	–	AS PER CONTRACT SPECIFICATION
NO. OF TANK	NO.	01
DIAMETER (I.D)	MM	7000
HEIGHT	MM	8000
ROOF PLATE THICKNESS	MM	8
SHELL PLATE THICKNESS	MM	6 (REFER ELEVATION)
BOTTOM PLATE THICKNESS	MM	8
INSULATION	–	NOT APPLICABLE
INSIDE LINING	–	5MM THICK OF BEST QUALITY BROMINE BUTYL RUBBER LINING WITH HARDNESS 55±5 (SHORE A HARDNESS)

NOZZLE SCHEDULE

NOZZLE			QTY	FLANGE			SERVICE	REMARKS
MARK	SIZE	Sch. No.		RATING	FACING	STANDARD		
A–1	–	–	1	–	–	–	AGITATOR	
MH–1	NB800	–	1	–	SOFF	PLATE	MANHOLE	WITH HINGE
MH–2	NB800	–	1	PLATE	SOFF	–	MANHOLE	
N–1A/B	NB250	–	2	150	SOFF	ANSI B16.5	LIQUID INLET	
N–2	NB100	–	1	150	SOFF	ANSI B16.5	LIQUID INLET	
N–3	NB125	–	1	150	SOFF	ANSI B16.5	MINIMUM FLOW	
LT–1&2	NB150	–	2	150	SOFF	ANSI B16.5	LEVEL TRANSMITTER	
V	NB80	–	1	150	SOFF	ANSI B16.5	VENT	
N–4	NB250	–	1	150	SOFF	ANSI B16.5	OVER FLOW	
N–5	NB200	–	1	150	SOFF	ANSI B16.5	BOTTOM DRAIN	
N–6A/B	NB150	–	2	150	SOFF	ANSI B16.5	PUMP SUCTION	

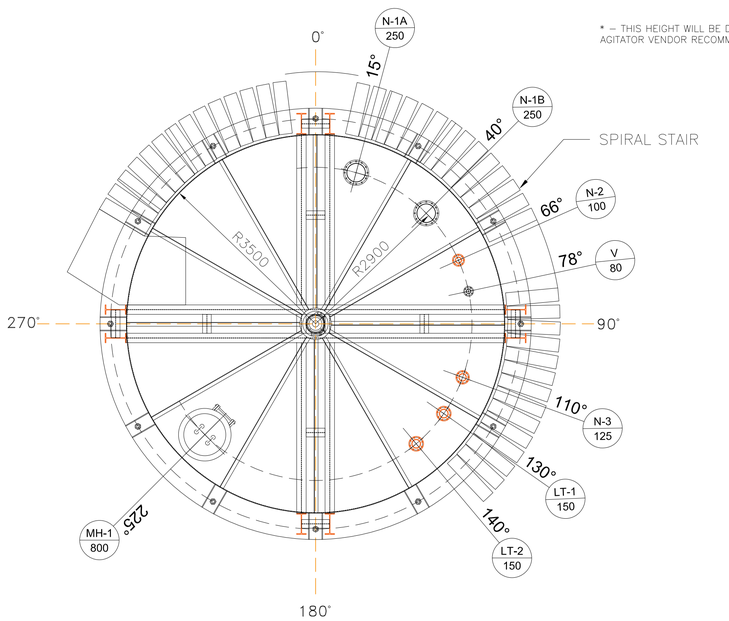

PLAN

* – THIS HEIGHT WILL BE DECIDED BASED ON AGITATOR VENDOR RECOMMENDATION

MATERIAL SPECIFICATION	
ITEM	MATERIAL
SHELL, ROOF, BASE AND BAFFLE PLATE	IS:2062 E250 GRADE BR
STRUCTURES	IS:2062 E250 GRADE A/BR
STAIRWAYS & PLTFS	IS:2062 E250 GRADE A/BR
MANHOLE	IS:2062 E250 GRADE BR
NOZZLE	A106 Gr B
NOZZLE FLANGES	IS:2062 E250 GRADE BR
NOZZLE REINFORCEMNT	IS:2062 E250 GRADE BR
NOZZLE NECKS	IS:1239
HAND RAILING	IS:1161
GASKETS	BUTYL RUBBER
BOLT	IS: 1367 CLASS 4.4
FITTINGS	A–105
EARTHING LUG	IS:2062 E250 GRADE BR
ANCHOR BOLT	IS:2062 E250 GRADE BR

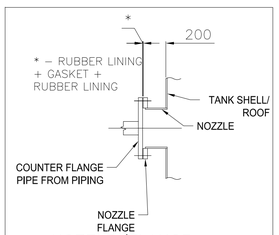

NOZZLE/FLANGE CONNECTION (TYPICAL)

NOTES:

1. ALL DIMENSIONS ARE IN MM, UNLESS SPECIFIED OTHERWISE.
2. OUTSIDE NOZZLE PROJECTION IS 200MM UNLESS OTHERWISE SPECIFIED.
3. NOZZLE REINFORCEMENTS SHALL BE AS PER IS:803.
4. NOZZLE PROJECTIONS ARE MEASURED FROM TANK SHELL INNER TO THE FLANGE FACE AS APPLICABLE.
5. ALL REINFORCEMENT PADS SHALL BE PROVIDED WITH 6MM TELLTALE HOLE.
6. NOZZLE AND FLANGE DETAILS SHALL BE AS PER IS803.
7. ALL BOLT HOLES SHALL STRADDLE VERTICAL CENTERLINES ON SHELL AND RADIAL CENTERLINES ON ROOF.
8. ALL PROTRUSIONS, SHARP EDGES AND SPATTER, ETC. SHALL BE REMOVED FROM THE SURFACE AND ALL WELDS GROUND SMOOTH WITHOUT ANY CAVITIES AND IMPERFECTION BEFORE LINING.
9. HYDRO TEST SHALL BE AS PER IS:803. LINING SHALL BE CARRIED–OUT AFTER HYDRO TEST.
10. ALL LONGITUDINAL JOINTS SHALL BE STAGGERED.
11. BOTTOM PLATE SHALL UNIFORMLY REST ON THE FOUNDATION.
12. THE MINIMUM SIZE OF WELD SHALL BE EQUAL TO THE THICKNESS OF THINNER MEMBER JOINT UNLESS SPECIFIED OTHERWISE.
13. EARTHING LUG SHALL BE WELDED TO TANK BODY AT SITE TO SUIT SITE REQUIREMENT.

** AGITATOR SHOWN ARE INDICATIVE WILL BE FINALIZED DURING DETAIL ENGINEERING.
*** NOZZLE LOCATION SHOWN IN DRAWING ARE INDICATIVE WILL BE FINALIZED DURING DETAIL ENGINEERING.

REV.	DATE	ALTD.	CKD.	APPD.
–	–	–	–	–

CAUTION: THIS DRAWING IS THE PROPERTY OF BHARAT HEAVY ELECTRICALS LIMITED. IT IS NOT TO BE REPRODUCED OR USED TO PROVIDE ANY INFORMATION REGARDING THE DRAWINGS OF APPARATUS EXCEPT WHERE PROVIDED FOR AGREEMENT WITH SAID COMPANY.

PROJECT: 3X660MW NABINAGAR STPP (SYSTEM : FLUE GAS DESULPHURIZATION)

CUSTOMER: NTPC LIMITED. (A GOVERNMENT OF INDIA ENTERPRISE)

BHARAT HEAVY ELECTRICALS LIMITED. UNIT: BOILER AUXILIARIES PLANT, RANIPET-632 406.

DEPT CODE: M

	NAME	SIGN	DATE

TITLE: GENERAL ARRANGEMENT AND DATA SHEET OF WASTE WATER TANK

SCALE : NTS

DRAWING NO. SKETCH–04 | SH 01 OF 02 | REV.00

Size A1

DRAWING NO. 2-FW-000-00395

ALL DIMENSIONS ARE IN MM

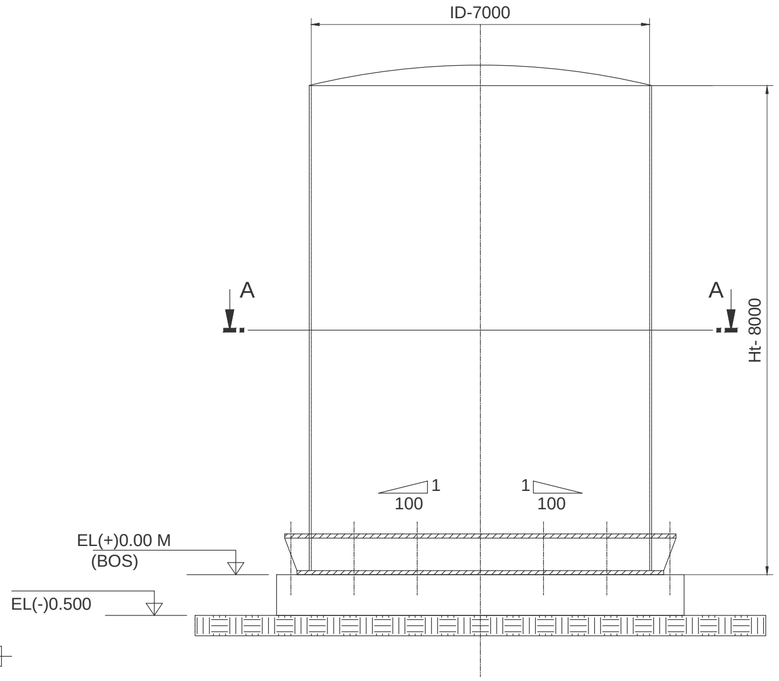

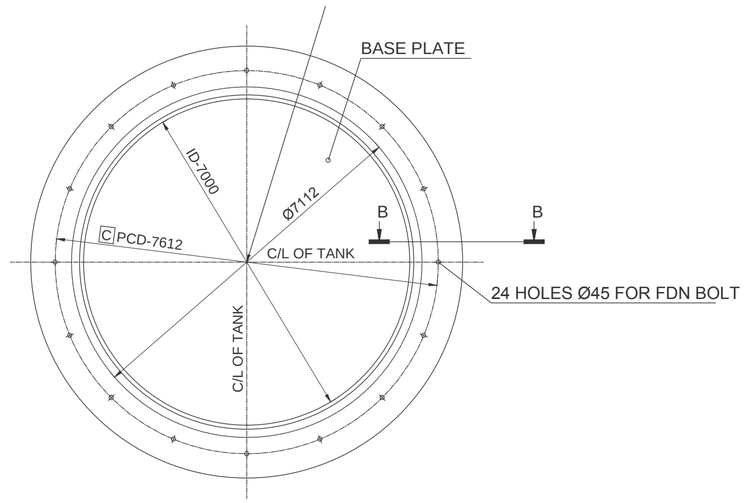

V I E W - AA

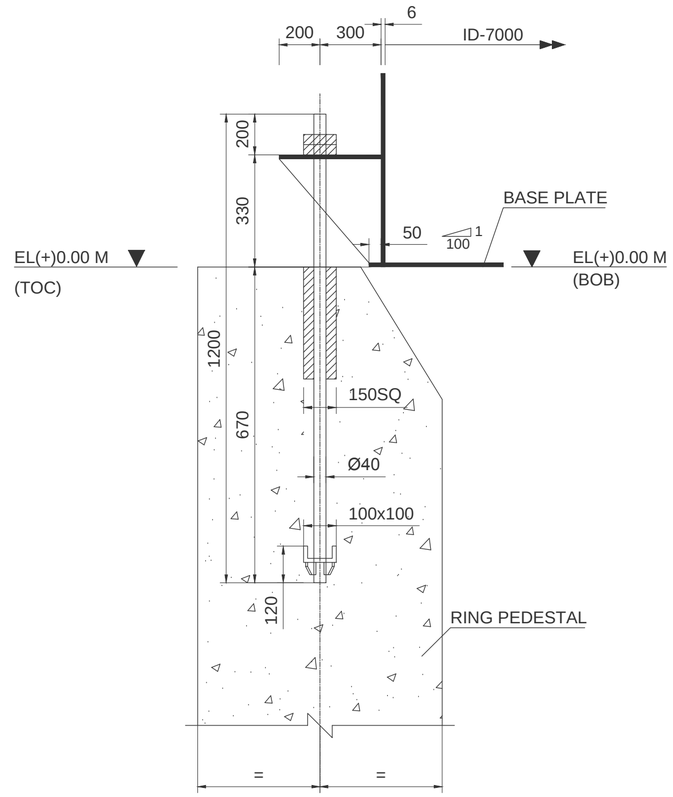

S E C T I O N - BB

N O T E S

01. NON-SHRINK CEMENTITIOUS FLOWABLE GROUT SHALL BE USED FOR GROUTING OF POCKETS AND SHALL BE ONE GRADE HIGHER THAN GRADE OF CONCRETE USED IN FOUNDATION.

02. MINIMUM GRADE OF CONCRETE USED FOR FOUNDATION SHALL BE M25.

03. -VOID

04. -VOID

05. -VOID

06. CIVIL FOUNDATION FOR TANK SHALL BE AS PER IS 803.

LEGEND :

BOS - BOTTOM OF STEEL	BOB - BOTTOM OF BASE PLATE
PCD - PITCH CIRCLE DIAMETER	TOC - TOP OF CONCRETE
T - TONS	PL - PAVEMENT LEVEL
T-M - TONNE METER	C - CRITICAL DIMENSION

LOAD DATA :

Empty Weight, We (T)	22
Operating Weight, Wo (T)	376
Max Horizontal Force, H (T)	
Due to Wind	10
Due to Seismic	79
Max Moment, M (T-m)	
Due to Wind	38
Due to Seismic (Ringwall Moment)	250

NUMBER OF TANK (s) = 01

CAUTION: THE DRAWING IS THE PROPERTY OF BHARAT HEAVY ELECTRICALS LTD.AND IS NOT TO BE REPRODUCED OR USED TO FURNISH ANY INFORMATION FOR MAKING OF DRAWINGS OF APPARATUS EXCEPT WHERE PROVIDED FOR AGREEMENT WITH SAID COMPANY.

NTPC LTD.
3x660 MW NABINAGAR STPP
FGD SYSTEM PACKAGE

BHARAT HEAVY ELECTRICALS LIMITED.

DEPT CODE		NAME	SIGN	DATE
M	DRN			
	CHD			
	APPD			

TITLE: FOUNDATION LOADING OF WASTE WATER TANK

DRAWING NO.	SCALE : NTS		
SKETCH-04		SHEET 2 OF 2	REV 00

SIZE A2

DRAWING NO. SKETCH-05

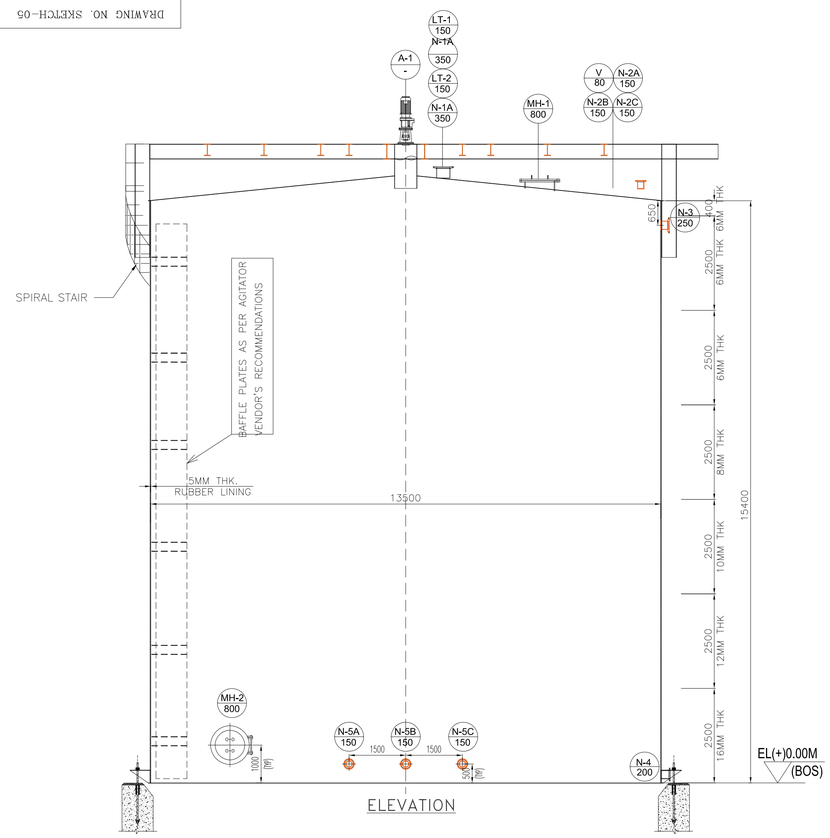

ELEVATION

* – THIS HEIGHT WILL BE DECIDED BASED ON AGITATOR VENDOR RECOMMENDATION

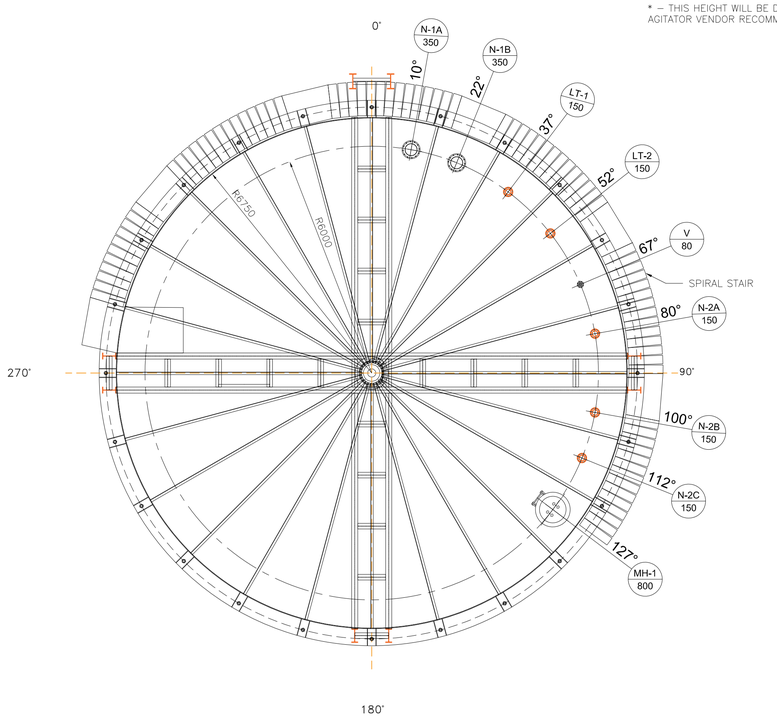

PLAN

DESIGN DATA		
DESIGN CODE	–	IS:803 1976 (REAFFIRMED 2013)
STORAGE PRODUCT	–	LIME STONE SLURRY
TANK CAPACITY (HOLD VOLUMNE)	M^3	2089.80
TANK CAPACITY (EFFECTIVE)	M^3	1889.40
TYPE OF TANK	–	VERTICAL CYLINDRICAL FIXED CONE ROOF
ROOF SLOPE	–	5°
DESIGN PRESSURE	–	HYDROSTATIC HEAD
OPERATING PRESSURE	–	ATMOSPHERIC
OPERATING TEMPERATURE	°C	63
HYDOR TESTING	–	WATER FILLED HEAD UPTO OVERFLOW NOZZLE
JOINT EFFECIENCY	–	0.7
RADIOGRAPHY	–	NO APPLICABLE
CORROSION ALLOWANCE	MM	1.5MM FOR SHELL AND BOTTOM PLATE
WIND CODE	–	AS PER CONTRACT SPECIFICATION
SEISMIC CODE	–	AS PER CONTRACT SPECIFICATION
NO. OF TANK	NO.	02
DIAMETER (I.D)	MM	13500
HEIGHT	MM	15400
ROOF PLATE THICKNESS	MM	8
SHELL PLATE THICKNESS	MM	16,12,10,8,6 (REFER ELEVATION)
BOTTOM PLATE THICKNESS	MM	8
INSULATION	–	NOT APPLICABLE
INSIDE LINING	–	5MM THICK OF BEST QUALITY BROMINE BUTYL RUBBER LINING WITH HARDNESS 55±5 (SHORE A HARDNESS)

NOZZLE SCHEDULE

NOZZLE			QTY	FLANGE			SERVICE	REMARKS
MARK	SIZE	Sch. No.		RATING	FACING	STANDARD		
A–1	–	–	1	–	–	–	AGITATOR	
MH–1	NB800	–	1	–	SOFF	PLATE	MANHOLE	WITH HINGE
MH–2	NB800	–	1	PLATE	SOFF	–	MANHOLE	
N–1A/B	NB350	–	2	150	SOFF	ANSI B16.5	LIQUID INLET	
N–2A/B/C	NB150	–	3	150	SOFF	ANSI B16.5	MINIMUM FLOW	
N–3	NB250	–	1	150	SOFF	ANSI B16.5	OVER FLOW	
LT–1&2	NB150	–	2	150	SOFF	ANSI B16.5	LEVEL TRANSMITTER	
V	NB80	–	1	150	SOFF	ANSI B16.5	VENT	
N–4	NB200	–	1	150	SOFF	ANSI B16.5	BOTTOM DRAIN	
N–5A/B/C	NB150	–	3	150	SOFF	ANSI B16.5	PUMP SUCTION	

MATERIAL SPECIFICATION

ITEM	MATERIAL
SHELL, ROOF, BASE AND BAFFLE PLATE	IS:2062 E250 GRADE BR
STRUCTURES	IS:2062 E250 GRADE A/BR
STAIRWAYS & PLTFS	IS:2062 E250 GRADE A/BR
MANHOLE	IS:2062 E250 GRADE BR
NOZZLE	A106 Gr B
NOZZLE FLANGES	IS:2062 E250 GRADE BR
NOZZLE REINFORCEMNT	IS:2062 E250 GRADE BR
NOZZLE NECKS	IS:1239
HAND RAILING	IS:1161
GASKETS	BUTYL RUBBER
BOLT	IS: 1367 CLASS 4.4
FITTINGS	A–105
EARTHING LUG	IS:2062 E250 GRADE BR
ANCHOR BOLT	IS:2062 E250 GRADE BR

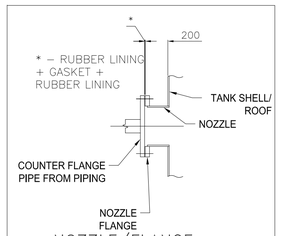

NOZZLE/FLANGE CONNECTION (TYPICAL)

NOTES:

1. ALL DIMENSIONS ARE IN MM, UNLESS SPECIFIED OTHERWISE.
2. OUTSIDE NOZZLE PROJECTION IS 200MM UNLESS OTHERWISE SPECIFIED.
3. NOZZLE REINFORCEMENTS SHALL BE AS PER IS:803.
4. NOZZLE PROJECTIONS ARE MEASURED FROM TANK SHELL INNER TO THE FLANGE FACE AS APPLICABLE.
5. ALL REINFORCEMENT PADS SHALL BE PROVIDED WITH 6MM TELLTALE HOLE.
6. NOZZLE AND FLANGE DETAILS SHALL BE AS PER IS803.
7. ALL BOLT HOLES SHALL STRADDLE VERTICAL CENTERLINES ON SHELL AND RADIAL CENTERLINES ON ROOF.
8. ALL PROTRUSIONS, SHARP EDGES AND SPATTER, ETC. SHALL BE REMOVED FROM THE SURFACE AND ALL WELDS GROUND SMOOTH WITHOUT ANY CAVITIES AND IMPERFECTION BEFORE LINING.
9. HYDRO TEST SHALL BE AS PER IS803. LINING SHALL BE CARRIED–OUT AFTER HYDRO TEST.
10. ALL LONGITUDINAL JOINTS SHALL BE STAGGERED.
11. BOTTOM PLATE SHALL UNIFORMLY REST ON THE FOUNDATION.
12. THE MINIMUM SIZE OF WELD SHALL BE EQUAL TO THE THICKNESS OF THINNER MEMBER JOINT UNLESS SPECIFIED OTHERWISE.
13. EARTHING LUG SHALL BE WELDED TO TANK BODY AT SITE TO SUIT SITE REQUIREMENT.

** AGITATOR SHOWN ARE INDICATIVE WILL BE FINALIZED DURING DETAIL ENGINEERING.
*** NOZZLE LOCATION SHOWN IN DRAWING ARE INDICATIVE WILL BE FINALIZED DURING DETAIL ENGINEERING.

REV.	DATE	ALTD:	CKD:	APPD.
–	–	–	–	–

CAUTION: THE DRAWING IS THE PROPERTY OF BHARAT HEAVY ELECTRICALS LTD.,AND IS NOT TO BE REPRODUCED OR LOAN TO THIRD PARTY WITHOUT WRITTEN PERMISSION OF DRAWINGS OF APPARATUS EXCEPT WHERE PROVIDED FOR AGREEMENT WITH SAID COMPANY.

PROJECT: 3X660MW NABINAGAR STPP (SYSTEM : FLUE GAS DESULPHURIZATION)

CUSTOMER: NTPC LIMITED (A GOVERNMENT OF INDIA ENTERPRISE)

BHARAT HEAVY ELECTRICALS LIMITED

DEPT CODE		NAME	SIGN	DATE
M	DRN			
	CHD			
	APPD			

TITLE: GENERAL ARRANGEMENT OF LIMESTONE SLURRY STORAGE TANK

SCALE : NTS

DRAWING NO. SKETCH–05 SH 01 OF 02 REV.00

Size A1

DRAWING NO. 2-FW-000-00392

ALL DIMENSIONS ARE IN MM

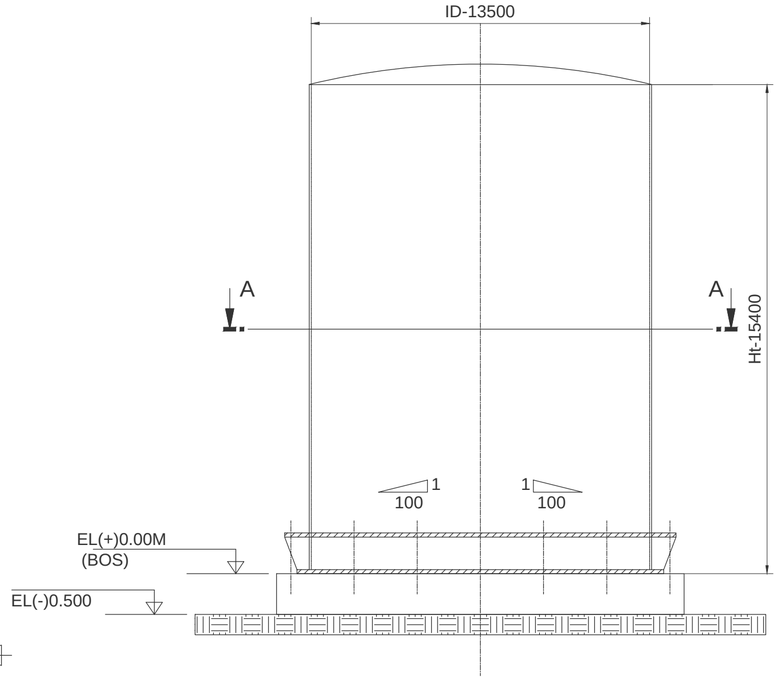

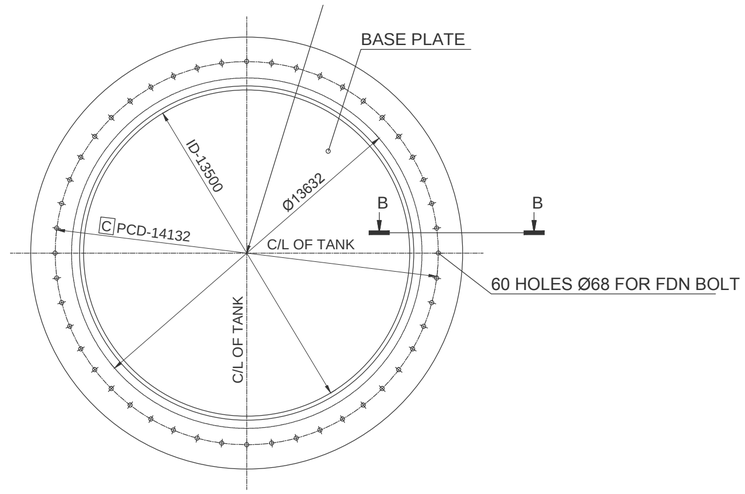

V I E W - AA

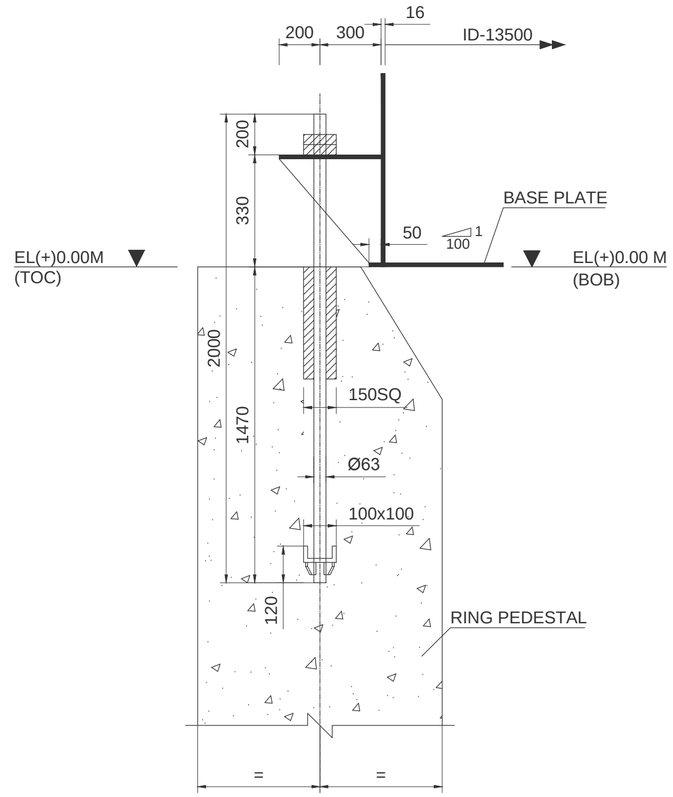

S E C T I O N - BB

N O T E S

01. NON-SHRINK CEMENTITIOUS FLOWABLE GROUT SHALL BE USED FOR GROUTING OF POCKETS AND SHALL BE ONE GRADE HIGHER THAN GRADE OF CONCRETE USED IN FOUNDATION.

02. MINIMUM GRADE OF CONCRETE USED FOR FOUNDATION SHALL BE M25.

03. -VOID

04. -VOID

05. -VOID

06. CIVIL FOUNDATION FOR TANK SHALL BE AS PER IS 803.

LEGEND :

BOS - BOTTOM OF STEEL	BOB - BOTTOM OF BASE PLATE
PCD - PITCH CIRCLE DIAMETER	TOC - TOP OF CONCRETE
T - TONS	PL - PAVEMENT LEVEL
T-M - TONNE METER	C - CRITICAL DIMENSION

LOAD DATA :

Empty Weight, We (T)	89
Operating Weight, Wo (T)	2845
Max Horizontal Force, H (T)	
Due to Wind	39
Due to Seismic	622
Max Moment, M (T-m)	
Due to Wind	294
Due to Seismic (Ringwall Moment)	3865

NUMBER OF TANK (s) = 02

CAUTION: THE DRAWING IS THE PROPERTY OF BHARAT HEAVY ELECTRICALS LTD.,AND IS NOT TO BE REPRODUCED OR USED TO FURNISH ANY INFORMATION FOR MAKING OF DRAWINGS OF APPARATUS EXCEPT WHERE PROVIDED FOR AGREEMENT WITH SAID COMPANY.

NTPC LTD.
3x660 MW NABINAGAR STPP
FGD SYSTEM PACKAGE

BHARAT HEAVY ELECTRICALS LIMITED.

DEPT CODE		NAME	SIGN	DATE
M	DRN			
	CHD			
	APPD			

TITLE: FOUNDATION LOADING OF LIMESTONE SLURRY STORGE TANK

DRAWING NO. SKETCH-05 | SCALE : NTS | SHEET 2 OF 2 | REV 00

SIZE A2

DRAWING NO. SKETCH-06

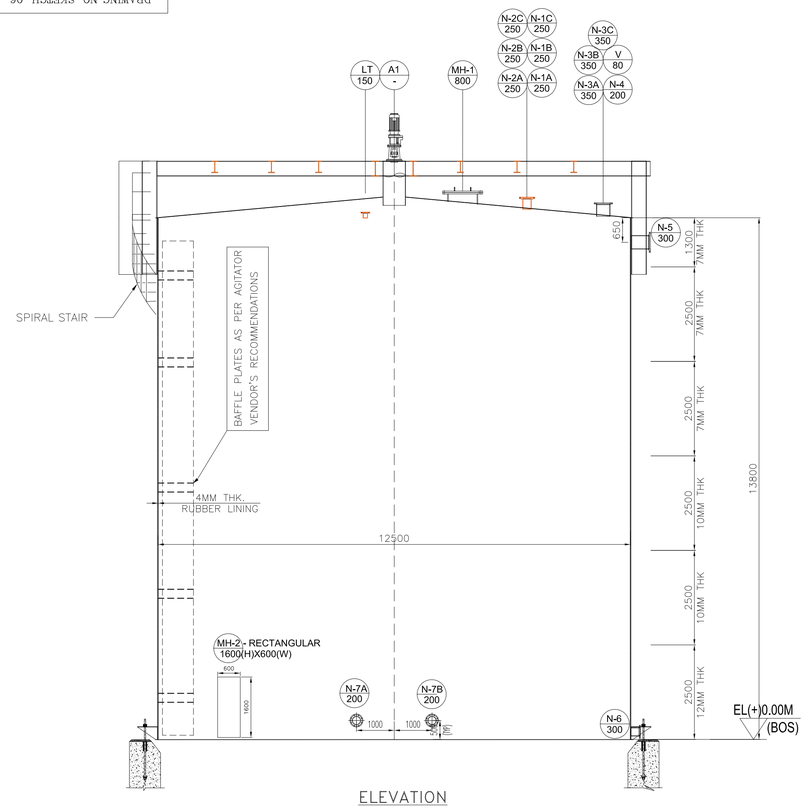

ELEVATION

* – THIS HEIGHT WILL BE DECIDED BASED ON AGITATOR VENDOR RECOMMENDATION

DESIGN DATA		
DESIGN CODE	–	IS:803 1976 (REAFFIRMED 2013)
STORAGE PRODUCT	–	GYPSUM BLEED/SLURRY
TANK CAPACITY (HOLD VOLUMNE)	M^3	1595
TANK CAPACITY (EFFECTIVE)	M^3	1570
TYPE OF TANK	–	VERTICAL CYLINDRICAL FIXED CONE ROOF
ROOF SLOPE	–	5°
DESIGN PRESSURE	–	HYDROSTATIC HEAD
OPERATING PRESSURE	–	ATMOSPHERIC
OPERATING TEMPERATURE	°C	63
HYDOR TESTING	–	WATER FILLED HEAD UPTO OVERFLOW NOZZLE
JOINT EFFECIENCY	–	0.7
RADIOGRAPHY	–	NO APPLICABLE
CORROSION ALLOWANCE	MM	1.5MM FOR SHELL AND BOTTOM PLATE
WIND CODE	–	AS PER CONTRACT SPECIFICATION
SEISMIC CODE	–	AS PER CONTRACT SPECIFICATION
NO. OF TANK	NO.	01
DIAMETER (I.D)	MM	12500
HEIGHT	MM	13800
ROOF PLATE THICKNESS	MM	8
SHELL PLATE THICKNESS	MM	12,10,8,7 (REFER ELEVATION)
BOTTOM PLATE THICKNESS	MM	8
INSULATION	–	NOT APPLICABLE
INSIDE LINING	–	4MM THICK OF BEST QUALITY BROMINE BUTYL RUBBER LINING WITH HARDNESS 55±5 (SHORE A HARDNESS)

NOZZLE SCHEDULE								
NOZZLE			QTY	FLANGE			SERVICE	REMARKS
MARK	SIZE	Sch. No.		RATING	FACING	STANDARD		
A–1	–	–	1	–	–	–	AGITATOR	
MH–1	NB800	–	1	–	SOFF	PLATE	MANHOLE	WITH HINGE
MH–2	1600(H)X 600(W)	–	1	PLATE	SOFF	–	MANHOLE	FOR ENTRY WITH WHEELBARROW
N–1A/B/C	NB250	–	3	150	SOFF	ANSI B16.5	LIQUID INLET	
N–2A/B/C	NB250	–	3	150	SOFF	ANSI B16.5	LIQUID INLET	
N–3A/B/C	NB350	–	3	150	SOFF	ANSI B16.5	LIQUID INLET	
LT	NB150	–	1	150	SOFF	ANSI B16.5	LEVEL TRANSMITTER	
V	NB80	–	1	150	SOFF	ANSI B16.5	VENT	
N–4	NB200	–	1	150	SOFF	ANSI B16.5	MINIMUM FLOW	
N–5	NB300	–	1	150	SOFF	ANSI B16.5	OVER FLOW	
N–6	NB300	–	1	150	SOFF	ANSI B16.5	BOTTOM DRAIN	
N–7A/B	NB200	–	2	150	SOFF	ANSI B16.5	PUMP SUCTION	

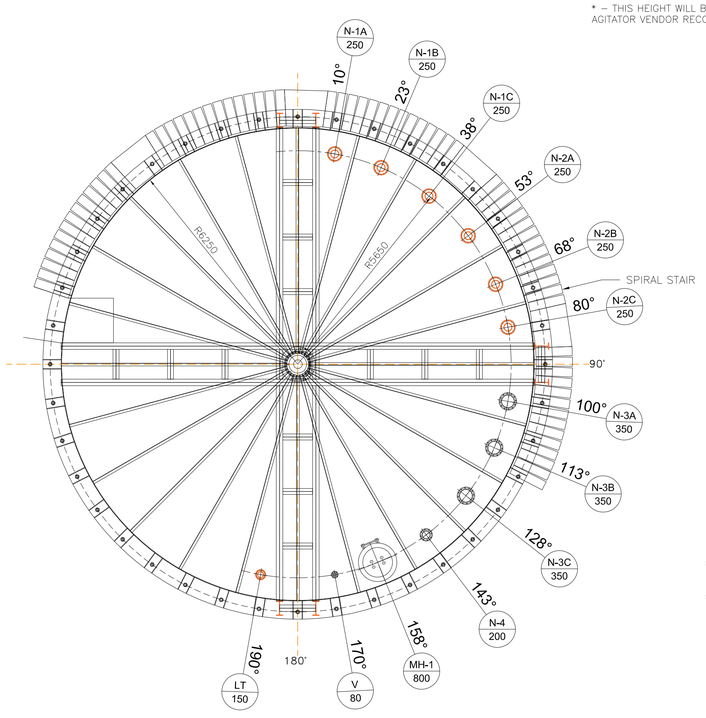

PLAN

MATERIAL SPECIFICATION	
ITEM	MATERIAL
SHELL, ROOF, BASE AND BAFFLE PLATE	IS:2062 E250 GRADE BR
STRUCTURES	IS:2062 E250 GRADE A/BR
STAIRWAYS & PLTFS	IS:2062 E250 GRADE A/BR
MANHOLE	IS:2062 E250 GRADE BR
NOZZLE	A106 Gr B
NOZZLE FLANGES	IS:2062 E250 GRADE BR
NOZZLE REINFORCEMNT	IS:2062 E250 GRADE BR
NOZZLE NECKS	IS:1239
HAND RAILING	IS:1161
GASKETS	BUTYL RUBBER
BOLT	IS: 1367 CLASS 4.4
FITTINGS	A–105
EARTHING LUG	IS:2062 E250 GRADE BR
ANCHOR BOLT	IS:2062 E250 GRADE BR

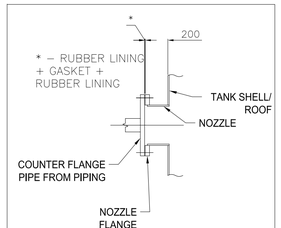

NOZZLE/FLANGE CONNECTION (TYPICAL)

NOTES:

1. ALL DIMENSIONS ARE IN MM, UNLESS SPECIFIED OTHERWISE.
2. OUTSIDE NOZZLE PROJECTION IS 200MM UNLESS OTHERWISE SPECIFIED.
3. NOZZLE REINFORCEMENTS SHALL BE AS PER IS:803.
4. NOZZLE PROJECTIONS ARE MEASURED FROM TANK SHELL INNER TO THE FLANGE FACE AS APPLICABLE.
5. ALL REINFORCEMENT PADS SHALL BE PROVIDED WITH 6MM TELLTALE HOLE.
6. NOZZLE AND FLANGE DETAILS SHALL BE AS PER IS803.
7. ALL BOLT HOLES SHALL STRADDLE VERTICAL CENTERLINES ON SHELL AND RADIAL CENTERLINES ON ROOF.
8. ALL PROTRUSIONS, SHARP EDGES AND SPATTER, ETC. SHALL BE REMOVED FROM THE SURFACE AND ALL WELDS GROUND SMOOTH WITHOUT ANY CAVITIES AND IMPERFECTION BEFORE LINING.
9. HYDRO TEST SHALL BE AS PER IS803. LINING SHALL BE CARRIED–OUT AFTER HYDRO TEST.
10. ALL LONGITUDINAL JOINTS SHALL BE STAGGERED.
11. BOTTOM PLATE SHALL UNIFORMLY REST ON THE FOUNDATION.
12. THE MINIMUM SIZE OF WELD SHALL BE EQUAL TO THE THICKNESS OF THINNER MEMBER JOINT UNLESS SPECIFIED OTHERWISE.
13. EARTHING LUG SHALL BE WELDED TO TANK BODY AT SITE TO SUIT SITE REQUIREMENT.

** AGITATOR SHOWN ARE INDICATIVE WILL BE FINALIZED DURING DETAIL ENGINEERING.
*** NOZZLE LOCATION SHOWN IN DRAWING ARE INDICATIVE WILL BE FINALIZED DURING DETAIL ENGINEERING.

REV.	DATE	ALTD:	CKD.	APPD.
–	–	–	–	–

CAUTION: THE DRAWING IS THE PROPERTY OF BHARAT HEAVY ELECTRICALS LTD AND IS NOT TO BE REPRODUCED OR USED TO OTHERS WITHOUT WRITTEN AUTHORITY. DRAWINGS OF APPURATES EXCEPT WHERE PROVIDED FOR AGREEMENT WITH SAID COMPANY.

PROJECT: 3X660MW NABINAGAR STPP (SYSTEM : FLUE GAS DESULPHURIZATION)

CUSTOMER: एन टी पी सी NTPC — NTPC LIMITED. (A GOVERNMENT OF INDIA ENTERPRISE)

BHARAT HEAVY ELECTRICALS LIMITED, UNIT: BOILER AUXILIARIES PLANT, RANIPET-632 406.

DEPT CODE		NAME	SIGN	DATE
M	DRN			
	CHD			
	APPD			

TITLE: GENERAL ARRANGEMENT AND DATA SHEET OF AUXILIARY ABSORBENT (STORAGE) TANK

SCALE : NTS

DRAWING NO. SKETCH–06 | SH 01 OF 02 | REV.00

Size A1

DRAWING NO: 2-FW-000-00393

ALL DIMENSIONS ARE IN MM

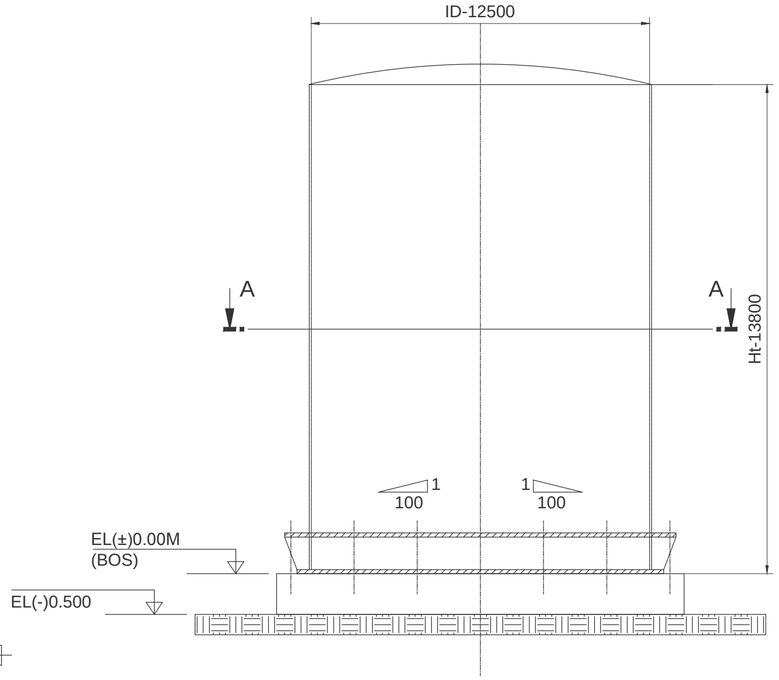

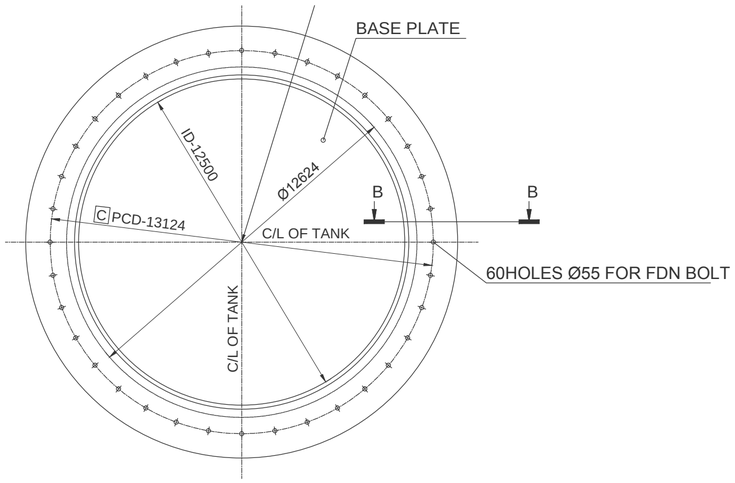

V I E W - AA

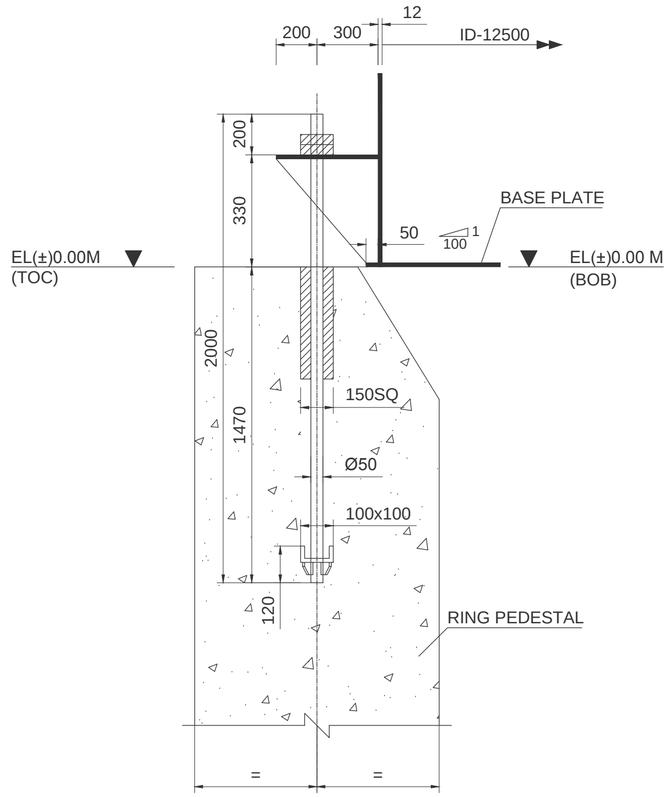

S E C T I O N - BB

N O T E S

01. NON-SHRINK CEMENTITIOUS FLOWABLE GROUT SHALL BE USED FOR GROUTING OF POCKETS AND SHALL BE ONE GRADE HIGHER THAN GRADE OF CONCRETE USED IN FOUNDATION.

02. MINIMUM GRADE OF CONCRETE USED FOR FOUNDATION SHALL BE M25.

03. -VOID

04. -VOID

05. -VOID

06. CIVIL FOUNDATION FOR TANK SHALL BE AS PER IS 803.

LEGEND :

BOS - BOTTOM OF STEEL	BOB - BOTTOM OF BASE PLATE
PCD - PITCH CIRCLE DIAMETER	TOC - TOP OF CONCRETE
T - TONS	PL - PAVEMENT LEVEL
T-M - TONNE METER	C - CRITICAL DIMENSION

LOAD DATA :

Empty Weight, We (T)	69
Operating Weight, Wo (T)	2185
Max Horizontal Force, H (T)	
Due to Wind	31
Due to Seismic	470
Max Moment, M (T-m)	
Due to Wind	213
Due to Seismic (Ringwall Moment)	2597

NUMBER OF TANK (s) = 01

CAUTION: THE DRAWING IS THE PROPERTY OF BHARAT HEAVY ELECTRICALS LTD.AND IS NOT TO BE REPRODUCED OR USED TO FURNISH ANY INFORMATION FOR MAKING OF DRAWINGS OF APPARATUS EXCEPT WHERE PROVIDED FOR AGREEMENT WITH SAID COMPANY.

NTPC LTD.
3x660 MW NABINAGAR STPP
FGD SYSTEM PACKAGE

BHARAT HEAVY ELECTRICALS LIMITED.

DEPT CODE		NAME	SIGN	DATE
M	DRN			
	CHD			
	APPD			

TITLE: FOUNDATION LOADING OF AUXILIARY ABSORBENT TANK

DRAWING NO. SKETCH-06 | SCALE : NTS | SHEET 2 OF 2 | REV 00

SIZE A2

DRAWING NO. SKETCH-07

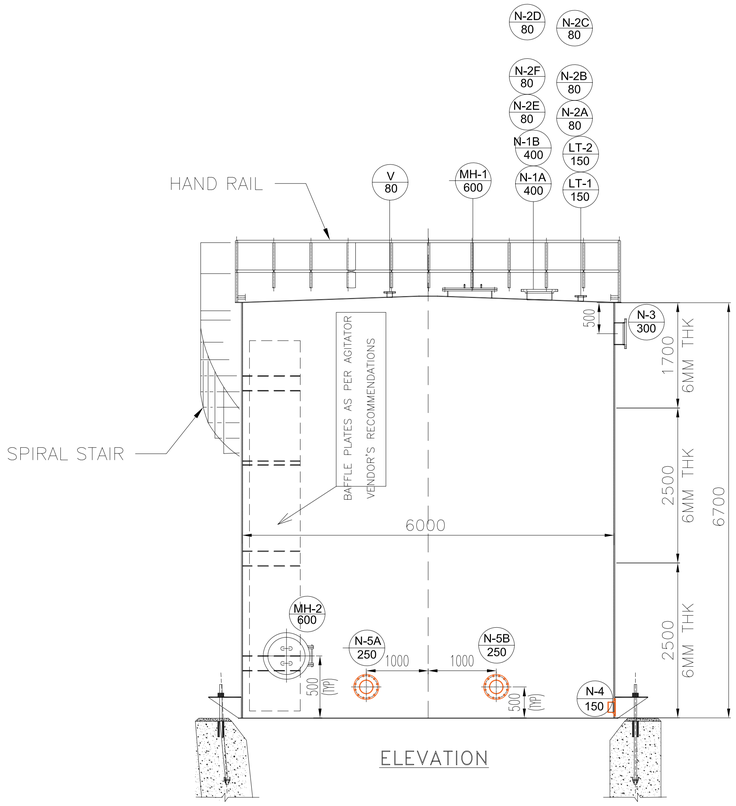

ELEVATION

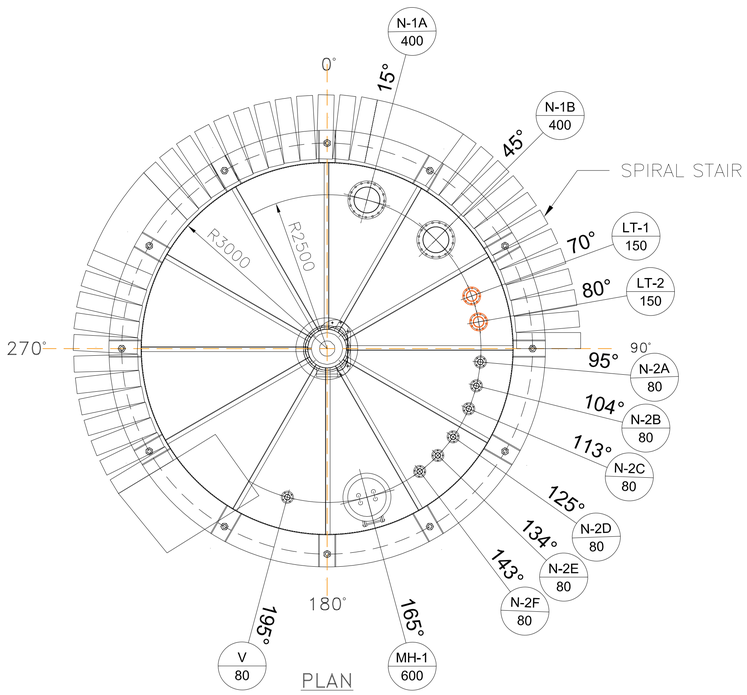

PLAN

DESIGN DATA		
DESIGN CODE	–	IS:803 1976 (REAFFIRMED 2013)
STORAGE PRODUCT	–	CLARIFIED WATER
TANK CAPACITY (HOLD VOLUMNE)	M^3	175.0
TANK CAPACITY (EFFECTIVE)	M^3	127.23
TYPE OF TANK	–	VERTICAL CYLINDRICAL FIXED CONE ROOF
ROOF SLOPE	–	5°
DESIGN PRESSURE	–	HYDROSTATIC HEAD
OPERATING PRESSURE	–	ATMOSPHERIC
OPERATING TEMPERATURE	°C	27
HYDOR TESTING	–	WATER FILLED HEAD UPTO OVERFLOW NOZZLE
JOINT EFFECIENCY	–	0.7
RADIOGRAPHY	–	NO APPLICABLE
CORROSION ALLOWANCE	MM	1.5MM FOR SHELL AND BOTTOM PLATE
WIND CODE	–	AS PER CONTRACT SPECIFICATION
SEISMIC CODE	–	AS PER CONTRACT SPECIFICATION
NO. OF TANK	NO.	02
DIAMETER (I.D)	MM	6000
HEIGHT	MM	6700
ROOF PLATE THICKNESS	MM	8
SHELL PLATE THICKNESS	MM	6 (REFER ELEVATION)
BOTTOM PLATE THICKNESS	MM	8
INSULATION	–	NOT APPLICABLE
INSIDE LINING	–	5MM THICK OF BEST QUALITY BROMINE BUTYL RUBBER LINING WITH HARDNESS 55±5 (SHORE A HARDNESS)

MATERIAL SPECIFICATION	
ITEM	MATERIAL
SHELL, ROOF, BASE AND BAFFLE PLATE	IS:2062 E250 GRADE BR
STRUCTURES	IS:2062 E250 GRADE A/BR
STAIRWAYS & PLTFS	IS:2062 E250 GRADE A/BR
MANHOLE	IS:2062 E250 GRADE BR
NOZZLE	A106 Gr B
NOZZLE FLANGES	IS:2062 E250 GRADE BR
NOZZLE REINFORCEMNT	IS:2062 E250 GRADE BR
NOZZLE NECKS	IS:1239
HAND RAILING	IS:1161
GASKETS	BUTYL RUBBER
BOLT	IS: 1367 CLASS 4.4
FITTINGS	A–105
EARTHING LUG	IS:2062 E250 GRADE BR
ANCHOR BOLT	IS:2062 E250 GRADE BR

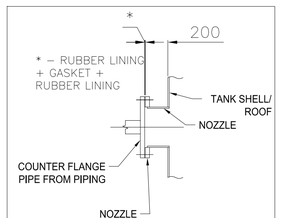

NOZZLE/FLANGE CONNECTION (TYPICAL)

NOZZLE SCHEDULE								
NOZZLE			QTY	FLANGE			SERVICE	REMARKS
MARK	SIZE	Sch. No.		RATING	FACING	STANDARD		
A–1	–	–	–	–	–	–	AGITATOR	
MH–1	NB600	–	1	–	SOFF	PLATE	MANHOLE	WITH HINGE
MH–2	NB600	–	1	PLATE	SOFF	–	MANHOLE	
N–1A/B	NB400	–	2	150	SOFF	ANSI B16.5	LIQUID INLET	
N–2A/B/C /D/E/F	NB80	–	6	150	SOFF	ANSI B16.5	MINIMUM FLOW	
N–3	NB300	–	1	150	SOFF	ANSI B16.5	OVER FLOW	
LT–1&2	NB150	–	2	150	SOFF	ANSI B16.5	LEVEL TRANSMITTER	
V	NB80	–	1	150	SOFF	ANSI B16.5	VENT	
N–4	NB150	–	1	150	SOFF	ANSI B16.5	BOTTOM DRAIN	
N–5A/B	NB250	–	2	150	SOFF	ANSI B16.5	PUMP SUCTION	

NOTES:

1. ALL DIMENSIONS ARE IN MM, UNLESS SPECIFIED OTHERWISE.
2. OUTSIDE NOZZLE PROJECTION IS 200MM UNLESS OTHERWISE SPECIFIED.
3. NOZZLE REINFORCEMENTS SHALL BE AS PER IS:803.
4. NOZZLE PROJECTIONS ARE MEASURED FROM TANK SHELL INNER TO THE FLANGE FACE AS APPLICABLE.
5. ALL REINFORCEMENT PADS SHALL BE PROVIDED WITH 6MM TELLTALE HOLE.
6. NOZZLE AND FLANGE DETAILS SHALL BE AS PER IS803.
7. ALL BOLT HOLES SHALL STRADDLE VERTICAL CENTERLINES ON SHELL AND RADIAL CENTERLINES ON ROOF.
8. ALL PROTRUSIONS, SHARP EDGES AND SPATTER, ETC. SHALL BE REMOVED FROM THE SURFACE AND ALL WELDS GROUND SMOOTH WITHOUT ANY CAVITIES AND IMPERFECTION BEFORE LINING.
9. HYDRO TEST SHALL BE AS PER IS803. LINING SHALL BE CARRIED–OUT AFTER HYDRO TEST.
10. ALL LONGITUDINAL JOINTS SHALL BE STAGGERED.
11. BOTTOM PLATE SHALL UNIFORMLY REST ON THE FOUNDATION.
12. THE MINIMUM SIZE OF WELD SHALL BE EQUAL TO THE THICKNESS OF THINNER MEMBER JOINT UNLESS SPECIFIED OTHERWISE.
13. EARTHING LUG SHALL BE WELDED TO TANK BODY AT SITE TO SUIT SITE REQUIREMENT.

* NOZZLE LOCATION SHOWN IN DRAWING ARE INDICATIVE WILL BE FINALIZED DURING DETAIL ENGINEERING.

REV.	DATE	ALTD.	CKD.	APPD.
–	–	–	–	–

CAUTION: THIS DRAWING IS THE PROPERTY OF BHARAT HEAVY ELECTRICALS LIMITED. IT MAY NOT BE REPRODUCED OR USED TO PROVIDE INFORMATION REGARDING DRAWINGS OF APPARATUS EXCEPT WHERE PROVIDED FOR AGREEMENT WITH SAID COMPANY.

PROJECT: 3X660MW NABINAGAR STPP
(SYSTEM : FLUE GAS DESULPHURIZATION)

CUSTOMER: NTPC LTD. (A GOVERNMENT OF INDIA ENTERPRISE)

BHARAT HEAVY ELECTRICALS LIMITED
UNIT: BOILER AUXILIARIES PLANT, RANIPET-632 406.

DEPT CODE		NAME	SIGN	DATE
M	DRN			
	CHD			
	APPD			

TITLE: GENERAL ARRANGEMENT OF PROCESS WATER TANK

SCALE : NTS

DRAWING NO. SKETCH–07 | SH 01 OF 02 | REV.00

Size A1

DRAWING NO. 2-FW-000-00397

ALL DIMENSIONS ARE IN MM

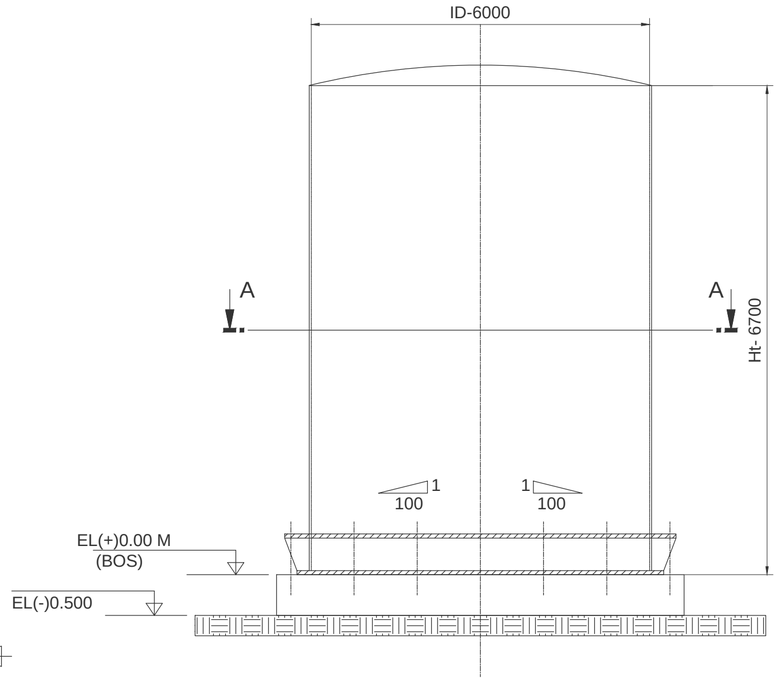

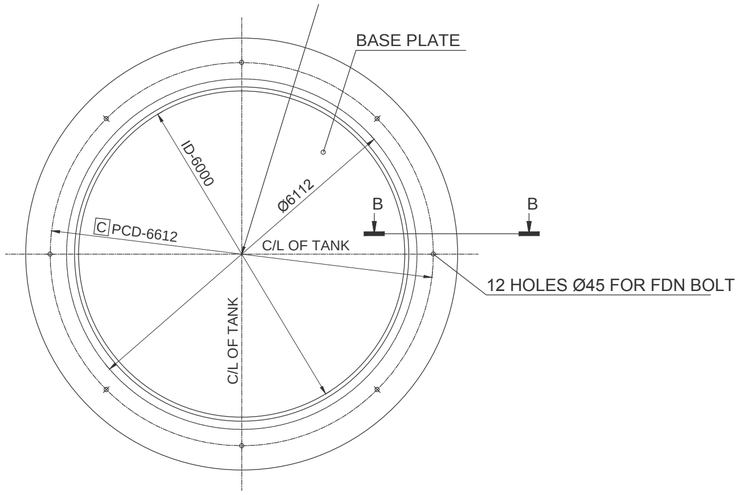

V I E W - AA

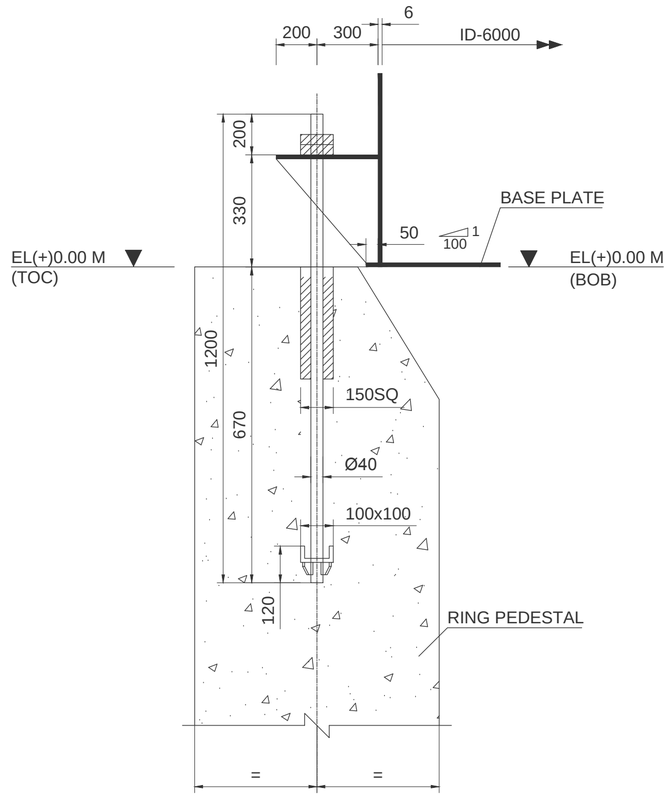

S E C T I O N - BB

N O T E S

01. NON-SHRINK CEMENTITIOUS FLOWABLE GROUT SHALL BE USED FOR GROUTING OF POCKETS AND SHALL BE ONE GRADE HIGHER THAN GRADE OF CONCRETE USED IN FOUNDATION.

02. MINIMUM GRADE OF CONCRETE USED FOR FOUNDATION SHALL BE M25.

03.-VOID

04.-VOID

05.-VOID

06. CIVIL FOUNDATION FOR TANK SHALL BE AS PER IS 803.

LEGEND :

BOS - BOTTOM OF STEEL	BOB - BOTTOM OF BASE PLATE
PCD - PITCH CIRCLE DIAMETER	TOC - TOP OF CONCRETE
T - TONS	PL - PAVEMENT LEVEL
T-M - TONNE METER	C - CRITICAL DIMENSION

LOAD DATA :

Empty Weight, We (T)	17
Operating Weight, Wo (T)	207
Max Horizontal Force, H (T)	
Due to Wind	7
Due to Seismic	42
Max Moment, M (T-m)	
Due to Wind	23
Due to Seismic (Ringwall Moment)	128

NUMBER OF TANK (s) = 02

CAUTION: THE DRAWING IS THE PROPERTY OF BHARAT HEAVY ELECTRICALS LTD.AND IS NOT TO BE REPRODUCED OR USED TO FURNISH ANY INFORMATION FOR MAKING OF DRAWINGS OF APPARATUS EXCEPT WHERE PROVIDED FOR AGREEMENT WITH SAID COMPANY.

NTPC LTD.
3x660 MW NABINAGAR STPP
FGD SYSTEM PACKAGE

BHARAT HEAVY ELECTRICALS LIMITED.

DEPT CODE		NAME	SIGN	DATE
M	DRN			
	CHD			
	APPD			

TITLE: FOUNDATION LOADING OF PROCEES WATER TANK

DRAWING NO. SKETCH-07 | SCALE : NTS | SHEET 2 OF 2 | REV 00

SIZE A2

DRAWING NO. SKETCH-08

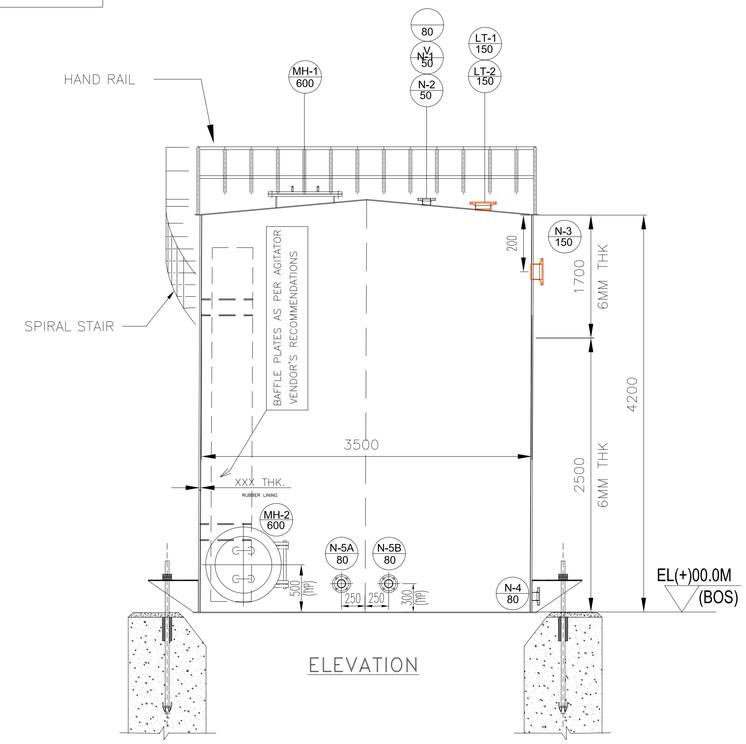

ELEVATION

DESIGN DATA		
DESIGN CODE	–	IS:803 1976 (REAFFIRMED 2013)
STORAGE PRODUCT	–	PROCESS/ CLARIFIED WATER
TANK CAPACITY (HOLD VOLUMNE)	M^3	21.2
TANK CAPACITY (EFFECTIVE)	M^3	11.31
TYPE OF TANK	–	VERTICAL CYLINDRICAL FIXED CONE ROOF
ROOF SLOPE	–	5°
DESIGN PRESSURE	–	HYDROSTATIC HEAD
OPERATING PRESSURE	–	ATMOSPHERIC
OPERATING TEMPERATURE	°C	58
HYDOR TESTING	–	WATER FILLED HEAD UPTO OVERFLOW NOZZLE
JOINT EFFECIENCY	–	0.7
RADIOGRAPHY	–	NO APPLICABLE
CORROSION ALLOWANCE	MM	1.5MM FOR SHELL AND BOTTOM PLATE
WIND CODE	–	AS PER CONTRACT SPECIFICATION
SEISMIC CODE	–	AS PER CONTRACT SPECIFICATION
NO. OF TANK	NO.	02
DIAMETER (I.D)	MM	3500
HEIGHT	MM	4200
ROOF PLATE THICKNESS	MM	8
SHELL PLATE THICKNESS	MM	6 (REFER ELEVATION)
BOTTOM PLATE THICKNESS	MM	8
INSULATION	–	NOT APPLICABLE
INSIDE LINING	–	5MM THICK OF BEST QUALITY BROMINE BUTYL RUBBER LINING WITH HARDNESS 55±5 (SHORE A HARDNESS)

NOZZLE SCHEDULE

NOZZLE			QTY	FLANGE			SERVICE	REMARKS
MARK	SIZE	Sch. No.		RATING	FACING	STANDARD		
A–1	–	–	–	–	–	–	AGITATOR	
MH–1	NB600	–	1	–	SOFF	PLATE	MANHOLE	WITH HINGE
MH–2	NB600	–	1	PLATE	SOFF	–	MANHOLE	
N–1	NB80	–	1	150	SOFF	ANSI B16.5	LIQUID INLET	
N–2	NB50	–	1	150	SOFF	ANSI B16.5	LIQUID INLET	
N–3	NB150	–	1	150	SOFF	ANSI B16.5	OVER FLOW	
LT	NB150	–	2	150	SOFF	ANSI B16.5	LEVEL TRANSMITTER	
V	NB50	–	1	150	SOFF	ANSI B16.5	VENT	
N–4	NB80	–	1	150	SOFF	ANSI B16.5	BOTTOM DRAIN	
N–5A/B	NB80	–	2	150	SOFF	ANSI B16.5	PUMP SUCTION	

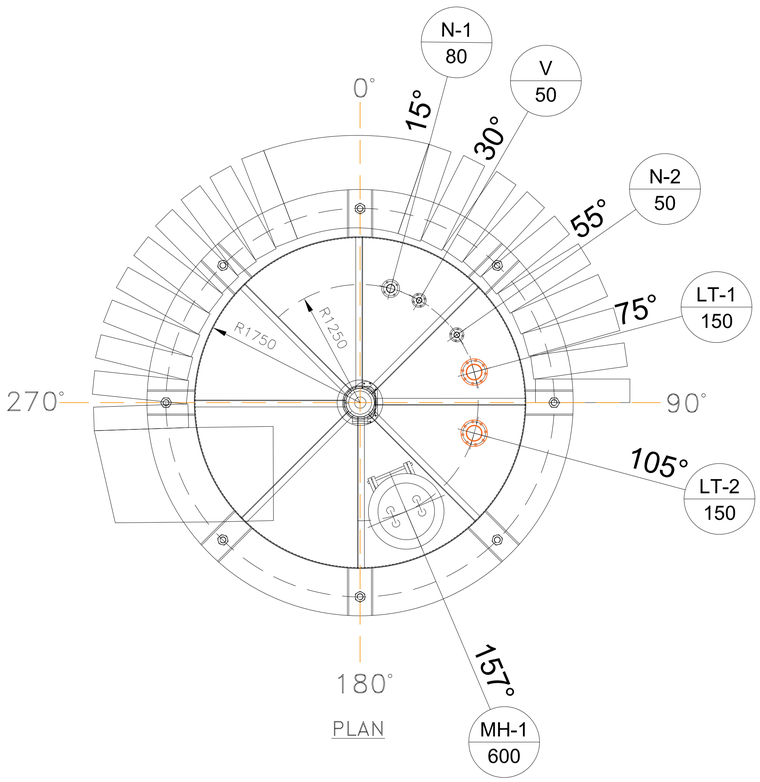

PLAN

MATERIAL SPECIFICATION	
ITEM	MATERIAL
SHELL, ROOF, BASE AND BAFFLE PLATE	IS:2062 E250 GRADE BR
STRUCTURES	IS:2062 E250 GRADE A/BR
STAIRWAYS & PLTFS	IS:2062 E250 GRADE A/BR
MANHOLE	IS:2062 E250 GRADE BR
NOZZLE	A106 Gr B
NOZZLE FLANGES	IS:2062 E250 GRADE BR
NOZZLE REINFORCEMNT	IS:2062 E250 GRADE BR
NOZZLE NECKS	IS:1239
HAND RAILING	IS:1161
GASKETS	BUTYL RUBBER
BOLT	IS: 1367 CLASS 4.4
FITTINGS	A–105
EARTHING LUG	IS:2062 E250 GRADE BR
ANCHOR BOLT	IS:2062 E250 GRADE BR

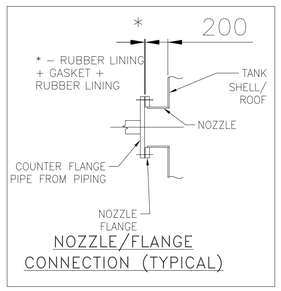

NOZZLE/FLANGE CONNECTION (TYPICAL)

NOTES:

1. ALL DIMENSIONS ARE IN MM, UNLESS SPECIFIED OTHERWISE.
2. OUTSIDE NOZZLE PROJECTION IS 200MM UNLESS OTHERWISE SPECIFIED.
3. NOZZLE REINFORCEMENTS SHALL BE AS PER IS:803.
4. NOZZLE PROJECTIONS ARE MEASURED FROM TANK SHELL INNER TO THE FLANGE FACE AS APPLICABLE.
5. ALL REINFORCEMENT PADS SHALL BE PROVIDED WITH 6MM TELLTALE HOLE.
6. NOZZLE AND FLANGE DETAILS SHALL BE AS PER IS803.
7. ALL BOLT HOLES SHALL STRADDLE VERTICAL CENTERLINES ON SHELL AND RADIAL CENTERLINES ON ROOF.
8. ALL PROTRUSIONS, SHARP EDGES AND SPATTER, ETC. SHALL BE REMOVED FROM THE SURFACE AND ALL WELDS GROUND SMOOTH WITHOUT ANY CAVITIES AND IMPERFECTION BEFORE LINING.
9. HYDRO TEST SHALL BE AS PER IS803. LINING SHALL BE CARRIED–OUT AFTER HYDRO TEST.
10. ALL LONGITUDINAL JOINTS SHALL BE STAGGERED.
11. BOTTOM PLATE SHALL UNIFORMLY REST ON THE FOUNDATION.
12. THE MINIMUM SIZE OF WELD SHALL BE EQUAL TO THE THICKNESS OF THINNER MEMBER JOINT UNLESS SPECIFIED OTHERWISE.
13. EARTHING LUG SHALL BE WELDED TO TANK BODY AT SITE TO SUIT SITE REQUIREMENT.

* NOZZLE LOCATION SHOWN IN DRAWING ARE INDICATIVE WILL BE FINALIZED DURING DETAIL ENGINEERING.

REV.	DATE	ALTD:	CKD.	APPD.
–	–	–	–	–

CAUTION: THE DRAWING IS THE PROPERTY OF BHARAT HEAVY ELECTRICALS LIMITED AND IS NOT TO BE REPRODUCED OR USED EXCEPT FOR THE PURPOSE FOR WHICH IT IS MADE OF DRAWINGS OF APPARATUS EXCEPT WHERE PROVIDED FOR AGREEMENT WITH SAID COMPANY.

PROJECT: 3X660MW NABINAGAR STPP (SYSTEM : FLUE GAS DESULPHURIZATION)

CUSTOMER: NTPC LTD. (A GOVERNMENT OF INDIA ENTERPRISE)

BHARAT HEAVY ELECTRICALS LIMITED.

DEPT CODE		NAME	SIGN	DATE
M	DRN			
	CHD			
	APPD			

TITLE: GENERAL ARRANGEMENT AND DATA SHEET OF BELT FILTER WASHING TANK

SCALE : NTS

DRAWING NO. SKETCH–08 | SH 01 OF 02 | REV.00

Size A1

DRAWING NO. 2-FW-000-00398

ALL DIMENSIONS ARE IN MM

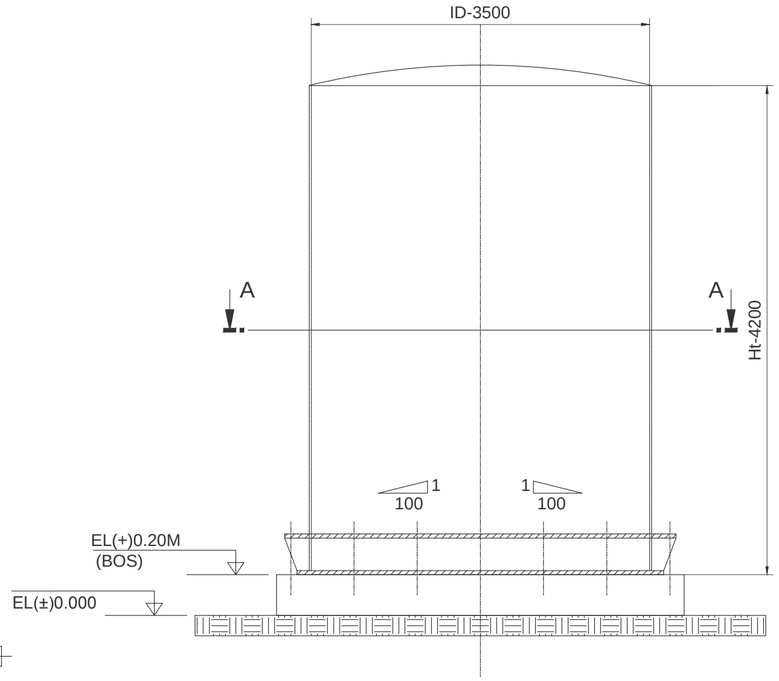

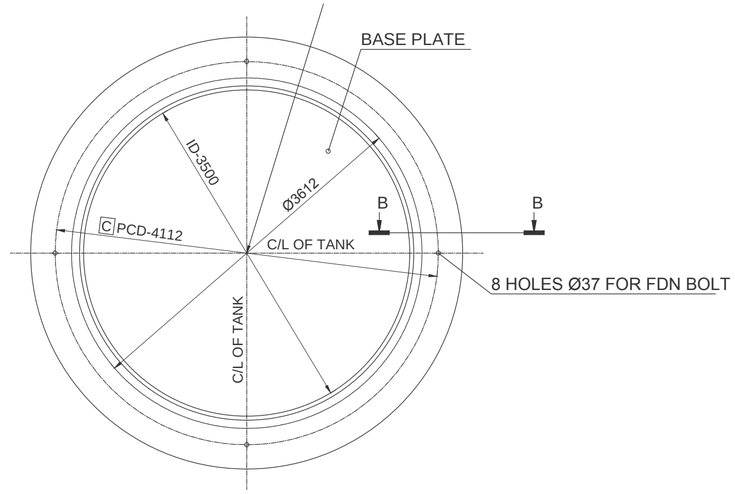

V I E W - AA

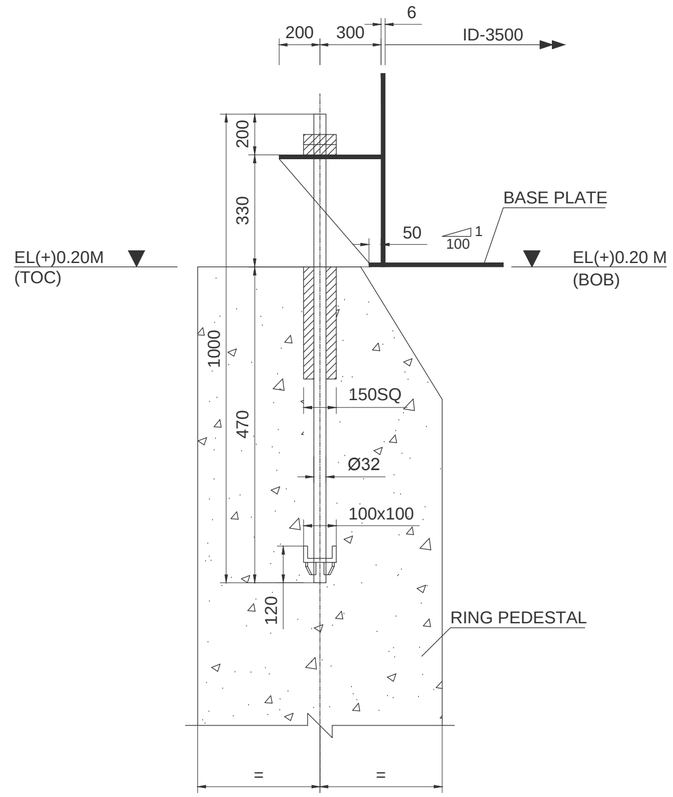

S E C T I O N - BB

N O T E S

01. NON-SHRINK CEMENTITIOUS FLOWABLE GROUT SHALL BE USED FOR GROUTING OF POCKETS AND SHALL BE ONE GRADE HIGHER THAN GRADE OF CONCRETE USED IN FOUNDATION.

02. MINIMUM GRADE OF CONCRETE USED FOR FOUNDATION SHALL BE M25.

03. -VOID

04. -VOID

05. -VOID

06. CIVIL FOUNDATION FOR TANK SHALL BE AS PER IS 803.

LEGEND :

BOS - BOTTOM OF STEEL	BOB - BOTTOM OF BASE PLATE
PCD - PITCH CIRCLE DIAMETER	TOC - TOP OF CONCRETE
T - TONS	PL - PAVEMENT LEVEL
T-M - TONNE METER	C - CRITICAL DIMENSION

LOAD DATA :

Empty Weight, We (T)	10
Operating Weight, Wo (T)	50
Max Horizontal Force, H (T)	
Due to Wind	3
Due to Seismic	10
Max Moment, M (T-m)	
Due to Wind	6
Due to Seismic (Ringwall Moment)	15

NUMBER OF TANK (s) = 02

CAUTION: THE DRAWING IS THE PROPERTY OF BHARAT HEAVY ELECTRICALS LTD.AND IS NOT TO BE REPRODUCED OR USED TO FURNISH ANY INFORMATION FOR MAKING OF DRAWINGS OF APPARATUS EXCEPT WHERE PROVIDED FOR AGREEMENT WITH SAID COMPANY.

NTPC LTD.
3x660 MW NABINAGAR STPP
FGD SYSTEM PACKAGE

BHARAT HEAVY ELECTRICALS LIMITED.

DEPT CODE		NAME	SIGN	DATE
M	DRN			
	CHD			
	APPD			

TITLE: FOUNDATION LOADING OF BELT FILTER WATER TANK

DRAWING NO. SKETCH-08 | SCALE : NTS | SHEET 2 OF 2 | REV 00

SIZE A2

DRAWING NO. SKETCH-09

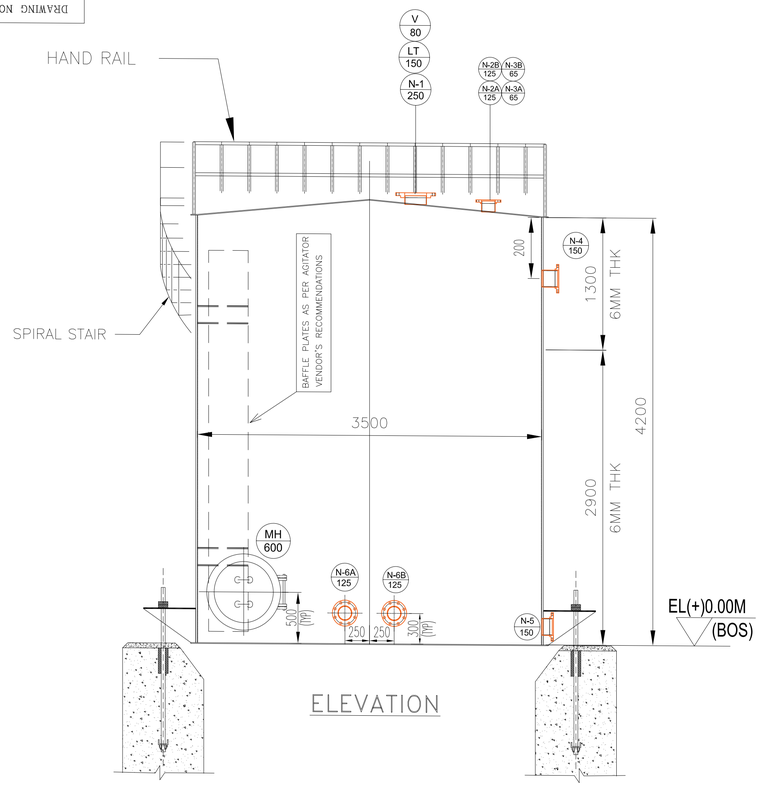

ELEVATION

DESIGN DATA		
DESIGN CODE	–	IS:803 1976 (REAFFIRMED 2013)
STORAGE PRODUCT	–	PROCESS/ CLARIFIED WATER
TANK CAPACITY (HOLD VOLUMNE)	M^3	35.6
TANK CAPACITY (EFFECTIVE)	M^3	22.13
TYPE OF TANK	–	VERTICAL CYLINDRICAL FIXED CONE ROOF
ROOF SLOPE	–	5°
DESIGN PRESSURE	–	HYDROSTATIC HEAD
OPERATING PRESSURE	–	ATMOSPHERIC
OPERATING TEMPERATURE	°C	58
HYDOR TESTING	–	WATER FILLED HEAD UPTO OVERFLOW NOZZLE
JOINT EFFECIENCY	–	0.7
RADIOGRAPHY	–	NO APPLICABLE
CORROSION ALLOWANCE	MM	1.5MM FOR SHELL AND BOTTOM PLATE
WIND CODE	–	AS PER CONTRACT SPECIFICATION
SEISMIC CODE	–	AS PER CONTRACT SPECIFICATION
NO. OF TANK	NO.	02
DIAMETER (I.D)	MM	3500
HEIGHT	MM	4200
ROOF PLATE THICKNESS	MM	8
SHELL PLATE THICKNESS	MM	6 (REFER ELEVATION)
BOTTOM PLATE THICKNESS	MM	8
INSULATION	–	NOT APPLICABLE
INSIDE LINING	–	5MM THICK OF BEST QUALITY BROMINE BUTYL RUBBER LINING WITH HARDNESS 55±5 (SHORE A HARDNESS)

NOZZLE SCHEDULE

NOZZLE			QTY	FLANGE			SERVICE	REMARKS
MARK	SIZE	Sch. No.		RATING	FACING	STANDARD		
A–1	–	–	–	–	–	–	AGITATOR	
MH	NB600	–	1	PLATE	SOFF	–	MANHOLE	
N–1	NB250	–	1	150	SOFF	ANSI B16.5	LIQUID INLET	
N–2A/B	NB125	–	2	150	SOFF	ANSI B16.5	LIQUID INLET	
N–3A/B	NB65	–	2	150	SOFF	ANSI B16.5	MINIMUM FLOW	
LT	NB150	–	1	150	SOFF	ANSI B16.5	LEVEL TRANSMITTER	
V	NB80	–	1	150	SOFF	ANSI B16.5	VENT	
N–4	NB150	–	1	150	SOFF	ANSI B16.5	OVER FLOW	
N–5	NB150	–	1	150	SOFF	ANSI B16.5	BOTTOM DRAIN	
N–6A/B	NB125	–	2	150	SOFF	ANSI B16.5	PUMP SUCTION	

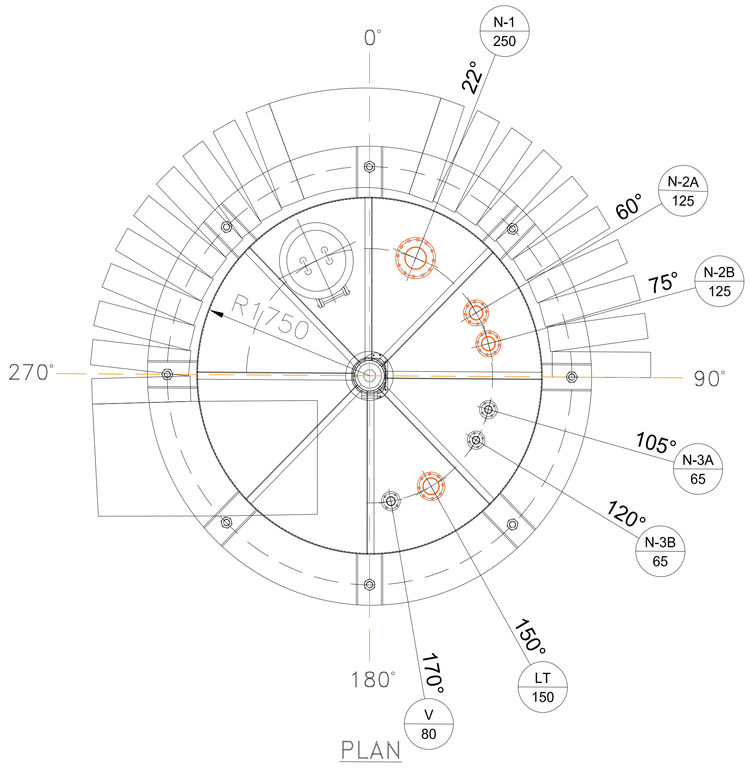

PLAN

MATERIAL SPECIFICATION	
ITEM	MATERIAL
SHELL, ROOF, BASE AND BAFFLE PLATE	IS:2062 E250 GRADE BR
STRUCTURES	IS:2062 E250 GRADE A/BR
STAIRWAYS & PLTFS	IS:2062 E250 GRADE A/BR
MANHOLE	IS:2062 E250 GRADE BR
NOZZLE	A106 Gr B
NOZZLE FLANGES	IS:2062 E250 GRADE BR
NOZZLE REINFORCEMNT	IS:2062 E250 GRADE BR
NOZZLE NECKS	IS:1239
HAND RAILING	IS:1161
GASKETS	BUTYL RUBBER
BOLT	IS: 1367 CLASS 4.4
FITTINGS	A–105
EARTHING LUG	IS:2062 E250 GRADE BR
ANCHOR BOLT	IS:2062 E250 GRADE BR

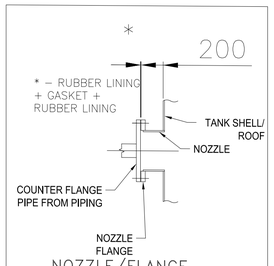

NOZZLE/FLANGE CONNECTION (TYPICAL)

NOTES:

1. ALL DIMENSIONS ARE IN MM, UNLESS SPECIFIED OTHERWISE.
2. OUTSIDE NOZZLE PROJECTION IS 200MM UNLESS OTHERWISE SPECIFIED.
3. NOZZLE REINFORCEMENTS SHALL BE AS PER IS:803.
4. NOZZLE PROJECTIONS ARE MEASURED FROM TANK SHELL INNER TO THE FLANGE FACE AS APPLICABLE.
5. ALL REINFORCEMENT PADS SHALL BE PROVIDED WITH 6MM TELLTALE HOLE.
6. NOZZLE AND FLANGE DETAILS SHALL BE AS PER IS803.
7. ALL BOLT HOLES SHALL STRADDLE VERTICAL CENTERLINES ON SHELL AND RADIAL CENTERLINES ON ROOF.
8. ALL PROTRUSIONS, SHARP EDGES AND SPATTER, ETC. SHALL BE REMOVED FROM THE SURFACE AND ALL WELDS GROUND SMOOTH WITHOUT ANY CAVITIES AND IMPERFECTION BEFORE LINING.
9. HYDRO TEST SHALL BE AS PER IS803. LINING SHALL BE CARRIED–OUT AFTER HYDRO TEST.
10. ALL LONGITUDINAL JOINTS SHALL BE STAGGERED.
11. BOTTOM PLATE SHALL UNIFORMLY REST ON THE FOUNDATION.
12. THE MINIMUM SIZE OF WELD SHALL BE EQUAL TO THE THICKNESS OF THINNER MEMBER JOINT UNLESS SPECIFIED OTHERWISE.
13. EARTHING LUG SHALL BE WELDED TO TANK BODY AT SITE TO SUIT SITE REQUIREMENT.

* NOZZLE LOCATION SHOWN IN DRAWING ARE INDICATIVE WILL BE FINALIZED DURING DETAIL ENGINEERING.

REV.	DATE	ALTD:	CKD.	APPD.
–	–	–	–	–
–				

CAUTION: THE DRAWING IS THE PROPERTY OF BHARAT HEAVY ELECTRICALS LTD. AND MUST NOT BE REPRODUCED OR USED TO FURNISH ANY INFORMATION FOR MAKING OF DRAWINGS OF APPARATUS EXCEPT WHERE PROVIDED FOR AGREEMENT WITH SAID COMPANY.

PROJECT: NORTH KARANPURA, 3X660MW (SYSTEM : FLUE GAS DESULPHURIZATION)

CUSTOMER: NTPC LTD. (A GOVERNMENT OF INDIA ENTERPRISE)

BHARAT HEAVY ELECTRICALS LIMITED.

DEPT CODE: M		NAME	SIGN	DATE
	DRN			
	CHD			
	APPD			

TITLE: GENERAL ARRANGEMENT AND DATA SHEET OF CLARIFIED WATER TANK (CAKE WASH TANK)

SCALE : NTS

DRAWING NO. SKETCH–09 | SH 01 OF 02 | REV.00

Size A1

DRAWING NO. 2-FW-000-00400

ALL DIMENSIONS ARE IN MM

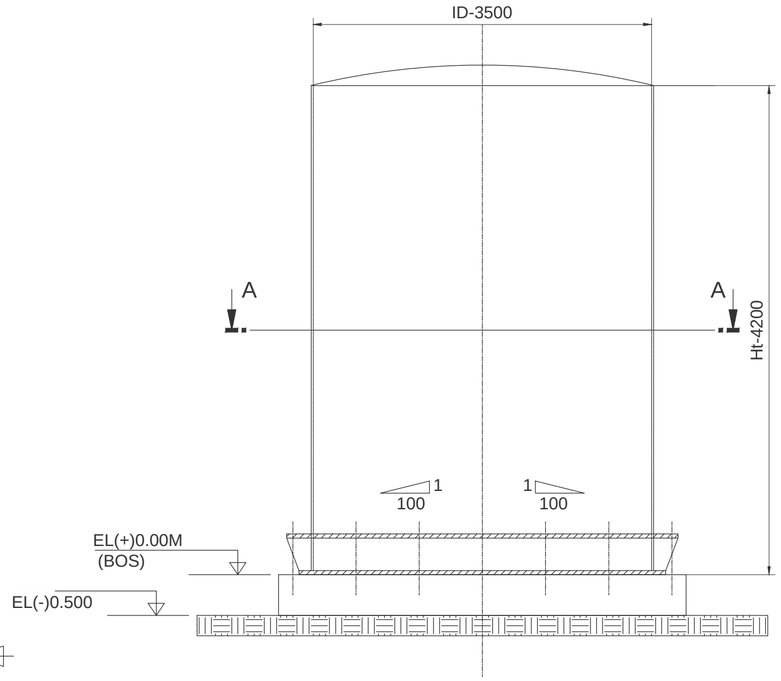

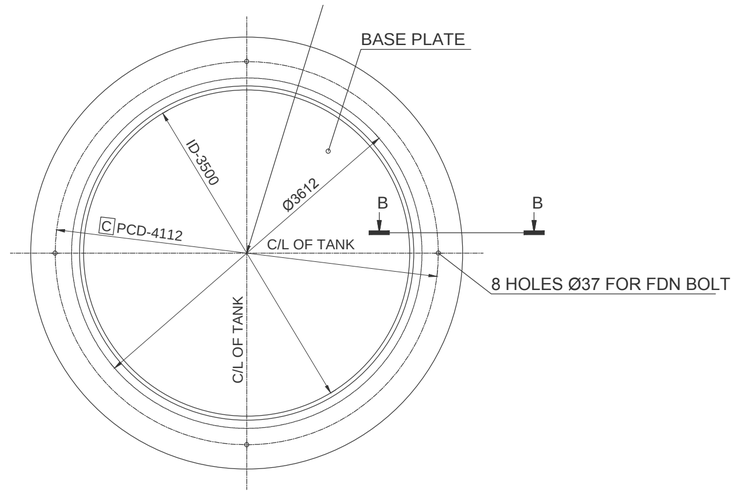

V I E W - AA

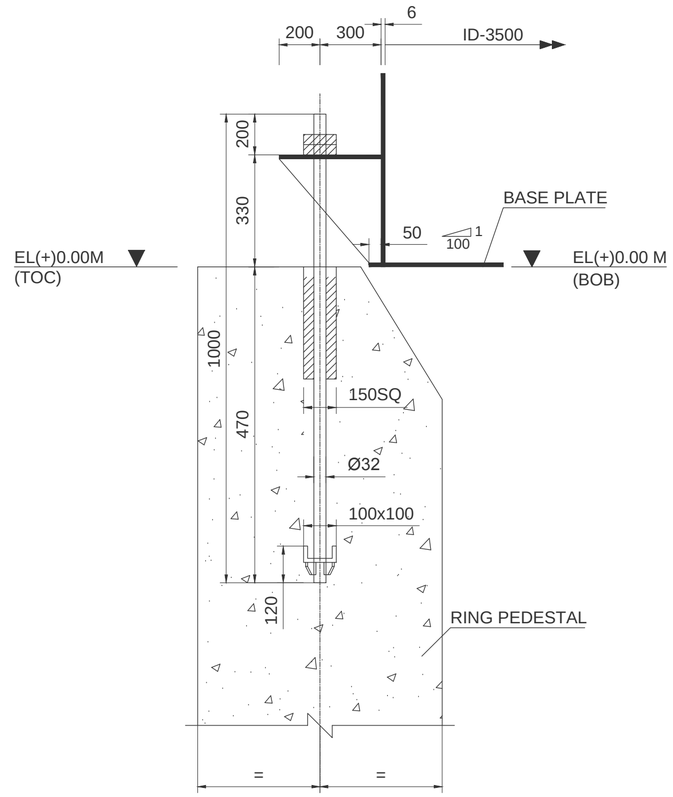

S E C T I O N - BB

N O T E S

01. NON-SHRINK CEMENTITIOUS FLOWABLE GROUT SHALL BE USED FOR GROUTING OF POCKETS AND SHALL BE ONE GRADE HIGHER THAN GRADE OF CONCRETE USED IN FOUNDATION.

02. MINIMUM GRADE OF CONCRETE USED FOR FOUNDATION SHALL BE M25.

03. -VOID

04. -VOID

05. -VOID

06. CIVIL FOUNDATION FOR TANK SHALL BE AS PER IS 803.

LEGEND :

BOS - BOTTOM OF STEEL	BOB - BOTTOM OF BASE PLATE
PCD - PITCH CIRCLE DIAMETER	TOC - TOP OF CONCRETE
T - TONS	PL - PAVEMENT LEVEL
T-M - TONNE METER	C - CRITICAL DIMENSION

LOAD DATA :

Empty Weight, We (T)	10
Operating Weight, Wo (T)	50
Max Horizontal Force, H (T)	
Due to Wind	3
Due to Seismic	10
Max Moment, M (T-m)	
Due to Wind	6
Due to Seismic (Ringwall Moment)	15

NUMBER OF TANK (s) = 02

CAUTION: THE DRAWING IS THE PROPERTY OF BHARAT HEAVY ELECTRICALS LTD.AND IS NOT TO BE REPRODUCED OR USED TO FURNISH ANY INFORMATION FOR MAKING OF DRAWINGS OF APPARATUS EXCEPT WHERE PROVIDED FOR AGREEMENT WITH SAID COMPANY.

NTPC LTD.
3x660 MW NABINAGAR STPP
FGD SYSTEM PACKAGE

BHARAT HEAVY ELECTRICALS LIMITED.

DEPT CODE		NAME	SIGN	DATE
M	DRN			
	CHD			
	APPD			

TITLE: FOUNDATION LOADING OF CLARIFIED WATER TANK

DRAWING NO.	SCALE : NTS		
SKETCH-09		SHEET 2 OF 2	REV 00

SIZE A2

All dimensions are in mm

Sketch of Drain Pit (Typical)

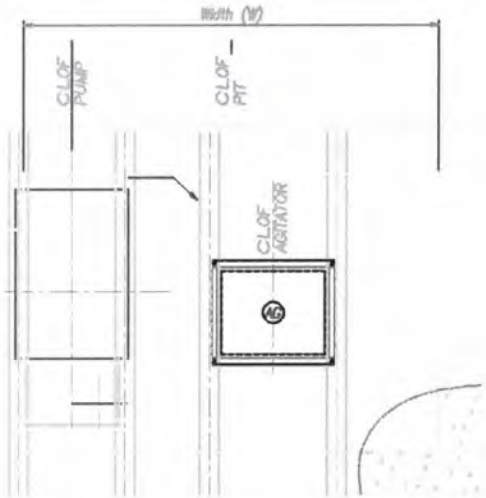

Plan

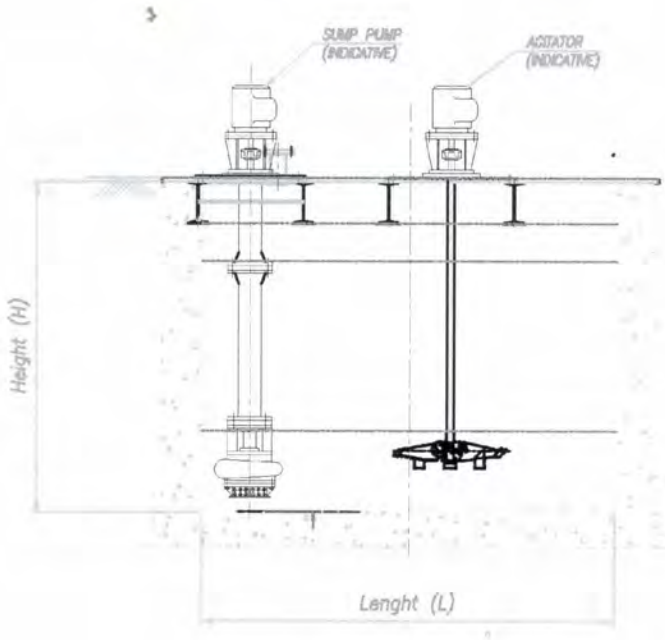

Elevation

Note:

For dimension, please refer ANNEXURE 8 SECTION III of technical specificaion

DRAWING No- SKETCH-10

DRAWINGS/ DOCUMENTS REQUIRED DURING DETAIL ENGINEERING

The successful bidder shall submit the following drawings / documents during detail engineering for approval / information / reference (as the case may be): -

Sl. No.	BHEL Drawing / Document No.	Title	Schedule Submission Date from LOI	Resubmission after incorporating comments
1	PE-V0-457-167-A001	FABRICATION DRAWING OF MISC. FGD TANK	5 weeks	Within 1 week
2	PE-V0-457-167-A002	DESIGN CALCULATION OF MISC. FGD TANKS INCLUDING ROOF STRUCTURE WITH STAAD CALCULATION	3 weeks	Within 1 week
3	PE-V0-457-167-A003	GA DRAWING OF MISC. FGD TANKS	4 weeks	Within 1 week
4	PE-V0-457-167-A004	DATASHEET & GA DRAWING OF RUBBER LINING FOR MISC. FGD TANKS	6 weeks	Within 1 week
5	PE-V0-457-167-A005	DATASHEET & GA DRAWING OF COMPONENTS FOR MISC. FGD TANKS	6 weeks	Within 1 week
6	PE-V0-457-167-A006	QAP OF RUBBER LINING FOR MISC. FGD TANKS	6 weeks	Within 1 week
7	PE-V0-457-167-A007	QAP OF COMPONENTS FOR MISC. FGD TANKS	6 weeks	Within 1 week
8	PE-V0-457-167-A008	SUB VENDOR LIST WITH INSPECTION CATEGORY FOR MISC. FGD TANKS	3 weeks	Within 1 week
9	PE-V0-457-167-A009	SURFACE PREPARATION AND LINING PROCEDURES FOR MISC. FGD TANKS	7 weeks	Within 1 week
10	PE-V0-457-167-A010	O&M MANUAL FOR RUBBER LINING	8 weeks	Within 1 week
11	PE-V0-457-167-A011	O&M MANUAL FOR MISC. FGD TANKS	8 weeks	Within 1 week

NOTE: Drwg/ Document shall be uploaded by the successful bidder on WRENCH /DMS.Procedure for the same will be informed after award of contract.

COMPANY SEAL

SIGNATURE: _____

NAME: _____

DESIGNATION: _____

COMPANY: _____

DATE: _____

SECTION-II

SUB-SECTION-A

STANDARD TECHNICAL SPECIFICATIONS- MECHANICAL

1.0 **SCOPE**

This specification covers design, engineering, supply of material, fabrication, assembly, inspection and testing at shop as well as at site, erection and commissioning, painting and functional demonstration testing at site.

2.0 **CODES & STANDARDS**

The design, fabrication & assembly, erection & performance of steel tanks shall comply with all latest statutory regulations and safety codes applicable in the locality where the tanks are to be installed. Tanks shall conform to the latest applicable Indian / British / USA standards. The vendor shall not be construed to be relieved of his responsibility by virtue of this specification. The tank in general shall conform to the latest editions, as applicable, out of the following standards.

1. IS-800 Code of practice for use if steel in general building construction

2. IS-803 Code of practice for design, fabrication and erection of vertical mild steel cylindrical welded oil storage tank.

3. IS-804 Specification for rectangular pressed steel tanks

4. IS-805 Code of practice for use of steel in gravity water tank.

5. IS-816 Code of practice for metal arc welding for general construction in MS.

6. IS-817 Code of practice for training and testing for metal arc welder

7. IS-2825 Code of practice for unfired pressure vessel

8. BS-2594 Specification for carbon steel welded horizontal cylindrical storage tank

9. BS-2654 Specification for vertical steel welded storage tanks with butt welded shells for the petroleum industry

12. Indian Factories Act

13. American code for oil tanks API 650

14. Material Specification as per relevant IS / or approved equal

15. American water works association standards (AWWA D100)

3.0 **DESIGN REQUIREMENT**

3.1 General Requirement

3.1.1 All tanks will be mild steel tanks. The tanks will be of welded construction and will be designed to withstand satisfactorily the internal forces due to the liquid which these tanks have to hold as specified and external forces due to wind and seismic forces without deformation or undue strain. The plates will be cold rolled through plate bending machines by several no. of passes to the curvature.

3.1.2 Tank thickness shall be calculated as per IS803 latest edition. Intermediary wind girder design, Wind Design, Seismic design, anchor bolt design / selection etc. shall be done as per API 650 latest edition, latest addendum available at the time of detail engineering.

3.1.3 All tanks will be designed for the capacities, dimensions and working conditions as specified in **Tank schedule and GA Drawing of tanks**. These tanks will be provided with all necessary connections as specified. The design of tanks will be such as to allow easy inspection, cleaning and repair. Due consideration will be given to wind loading and adequate stiffening will be provided to prevent failure of tank due to buckling when it is empty. A 3.0 mm corrosion allowance for shells, bottom and roofs above and beyond the required thickness / calculated thickness / nominal thickness as specified in the design code shall be provided.

3.1.4 Vessel seams shall be so positioned that they do not pass through nozzle connections on vessel. For vessels consisting of more than two sections, longitudinal seams shall be offset.

3.1.5 The inside seam should be ground smooth, suitable for application of corrosion resistant primer. If the stiffening of shell, bottom and / or roof is necessary, tanks will be stiffened from outside.

3.1.6 Flange faces of all nozzles shall be machined and squared with the vessel center line.

3.1.7 All roofs and supporting structures shall be designed to support dead load plus a uniform live load of not less than 150 kg/m^2 of projected area.

3.1.8 The tanks shall be designed to have all courses truly vertical. Adequate distance between vertical joints in adjacent courses shall be taken so that the distortion is reduced to minimum.

3.1.9 When removing temporary attachments from shell plates, care should be taken that parent plate is not damaged. Holes in plate work to assist in fabrication / erection should be avoided as far as possible. The location of holes and method of filling shall be indicated in the fabrication drawing. Any projection of metal shall be chipped and ground flush with the plate surface. The plate shall not be gouged or torn in process of removing lugs.

3.1.10 In the construction of shell, very care shall be taken to minimize distortion or lack of circularity due to welding or for any other reason.

3.1.11 Material of construction of all tanks shall be mild steel conforms to IS – 2062 grade – B unless otherwise specified in the **Tank schedule and GA Drawing of tanks.**

3.1.10 **Alignment**

3.1.10.1 Plates to be joined by butt-welding shall be matched accurately. Misalignment in completed vertical joints shall not exceed 10% of the plate thickness or 1.5 mm for plates of 20 mm thick and under, whichever is larger.

3.1.10.2 In completed horizontal butt joints, the upper plate shall not project beyond the face of the lower plate at any point by more than 20% of the upper plate thickness with a maximum of 3 mm for plate thickness exceeding 8 mm except that for plate thickness 8 mm and under, the maximum shall be 1.5 mm.

3.1.10.3 Each tank shall be properly constructed ensuring perfect vertical alignment with 5 mm or as specified in the relevant code / standard and tank circularity within 5 mm on diameter or as specified in the relevant code / standard. Local bulging and / or depressions at any location of tank particularly shell shall not be permitted.

3.1.11 **WELDING**

3.1.11.1 Tanks and other attachments shall be welded as per IS-816.

3.1.11.2 Welding sequence shall be so adopted that distortion due to welding shrinkage shall be minimum. Welding procedure specification shall be submitted for approval of BHEL giving details of material, welding position, sequence, type of electrode used, pre-heat & post weld requirement etc as per the code of construction. Brand name of electrodes to be used with proper classification (e.g. E 6013) shall be as per BHEL's approval.

3.1.11.3 Welding shall not be carried out when the surface is wet and during periods of rain and high winds unless the welder and the work are properly shielded which should meet the approval of the purchaser.

3.1.11.4 Inspection of all welds shall be carried out in accordance with the governing code of construction. All material used by the purchaser such as electrodes, gaskets, bolts, nuts etc shall be conforming to relevant standards of repute and approved by the purchaser prior to use.

3.1.12 Each tank shall be complete with access staircase, ladder and safety cage and fittings like drain connection, overflow connection, tank inlet and outlet covers, level gauge glass, fittings with isolation cocks and protection covers, tank vent connection etc. all complete with needed accessories for the completeness of the tanks and as specified in **Tank schedule and GA Drawing of tanks**.

3.1.13 All openings in tank plate shall be well reinforced in approved manner by adding pad plates of adequate size and / or structural sections.

3.1.14 **STAIRCASE / ACCESS LADDER AND HAND RAILING**

3.1.14.1 All cylindrical vertical tanks shall be provided with spiral staircase and shall conform to the requirements specified in design codes / standards unless specified otherwise. All stair treads shall be 32 mm steel fabricated gratings or 8mm thk. chequered plate which will be decided during detail engineering stage. Each tread, if needed, shall be housed in individual

steel fabricated frame which shall be adequately supported from the tank outer periphery. The staircase shall have minimum 800 mm clear width.

3.1.14.2 Access ladder, one (1) for each horizontal cylindrical / rectangular tank shall be provided for access to the tank roof. It shall be steel fabricated having minimum 450 mm width. Ladder stringers shall be heavy steel flats or angle section. All rungs shall be minimum 20 mm diameter rods spaced at not more than 30 mm center to center. All ladders shall have steel fabricated safety cage to the approved construction. Safety cage shall be provided about 2.5 m clear height of the ladder. Access ladder's stringers shall be widely spaced at top for free access to the tank roof.

3.1.14.3 All staircase and roofs of vertical cylindrical tanks shall be provided with pipe hand railings of effective height as indicated in the relevant code / standard throughout. Handrails shall be constructed out of 32 mm medium class galvanized steel pipe conforming to IS- 1239: 1968. Handrail posts shall be arranged at spacing not greater than 1850 mm. Two (2) sets of pipes horizontal runners all along the length shall be provided. All welds joints in the handrails shall be ground flush to protect any person getting injured. Steel toe plates of 100 mm flats shall be used. Hand railing shall be fabricated and installed in an approved manner as directed by purchaser in accordance with approved drawings.

3.1.15 Unless otherwise specified, for all flanged connections, vendor shall furnish suitable counter flanges and necessary nuts, bolts and gaskets materials.

3.1.16 Unless otherwise specified, bolts and nuts shall be hexagonal head conforming to bolts and nuts shall be SA 193 & 194 respectively.

3.1.17 Gaskets shall be 3 mm thick full-face rubber or CAF. On completion of hydraulic test / water fill test, contractor shall replace the gaskets used during testing at his own cost.

3.1.18 Float level indicators other than float and arrow type level indicator, gauge glass shall be provided.

3.1.19 During erection of tank, shell plates shall be suitably supported both for outside and inside to avoid buckling / collapsing of tank due to high-speed wind, gust or severe storm, if any, occurring during erection.

3.2 **VERTICAL CYLINDRICAL STORAGE TANKS**

3.2.1 The vertical cylindrical storage (non- pressure) tanks shall be of mild steel welded construction and shall be designed in accordance with codes and standards as specified in the **Tank schedule and GA Drawing of tanks**. The vertical cylindrical storage tanks shall have slightly sloping bottom towards an adequately sized sump inside the tank to enable complete draining of the tank. The tank shall be designed for a wind pressure and seismic coefficient as specified.

3.2.2 Conical roof shall be either self-supported or supporting. The roof shall have a slope as specified in the relevant design code to ensure drainage of rainwater. Needed roof rafters and purlins adequately designed shall be provided.

3.2.3 All plates to be used for fabrication of tank shall be checked and all sides trimmed to make them square.

3.2.4 All bottom plates shall have lap weld joints on all sides with overlap not less than five times the plate thickness.

3.2.5 All shell course plates shall be taken during bending to prevent plate skewing. For butt weld joints, edges shall be prepared which shall be uniform and smooth throughout. To maintain needed root penetration gap at any butt weld joint, sufficient numbers of erection cleats shall be provided on all sides of outer periphery of each shell plate. Plates for tanks shall be straightened by pressing or by other non-injurious methods.

3.2.6 Each shell course shall be of uniform width throughout longitudinal weld in plates. Make up for the course width shall not be permitted. Shell plates in each course width shall be so arranged that all vertical joints be staggered having a minimum of 600 mm stagger. Shell thickness could be reduced in upper courses depending on design requirements but in no case the plate thickness shall be less than 8 mm.

3.2.7 The tank height shall be completed by the provision of top curb/ angle which shall be butt-welded to the adjacent tank plate courses. The outstanding leg of the curb angle shall be kept outside the tank periphery. All butt weld joints shall be full strength welds but for design of shell plate thickness adequate weld efficiency as recommended by applicable code(s) shall be used.

3.2.8 Tank roof shall be either self-supported or supported over rafters / steel fabricated central column(s). Adequately sized and spaced rafters and purlins shall be provided. All rafters shall have sliding bolted connections at one end and preferably on the tank periphery side. The roof-supporting frame shall have needed tie rods or bracing sets.

3.2.9 Roof plates shall have lap joints with lap not less than 25 mm and lap weld over the top surface only. Roof plates shall have continuous fillet welds around the tank curb angle. No joint of roof plate over the supporting frame shall be made.

3.2.10 Openings needed for mounting various specified accessories shall be well reinforced in accordance with application codes and as approved. Manhole shall the bolted and hinged covers unless otherwise specified.

3.2.11 All inlet pipe nozzles located at the top of tanks shall be provided with internal piping up to 500 mm high above the tank's bottom inside with suitable weir plate at bottom. The inside piping shall be adequately supported and shall be provided with adequately sized vent connection at pipe top.

3.3.0 **RECTANGULAR TANKS**

3.3.1 Rectangular tanks shall be fabricated in steel material and shall be designed to withstand internal hydrostatic pressure. In addition, these shall be checked for a wind pressure and seismic coefficient as specified wherever applicable. While worst of these two shall be considered, the permissible stress shall be increased as per good engineering practice when their effect considered with tank load.

3.3.2 Tank bottom and / or side plates shall be of minimum 8 mm thick plate. Corrosion margin of at least 2 mm shall be provided over the design thickness of bottom and / or side plates.

3.3.3 To support tank plates and to maintain required unsupported plate length, adequately sized and spaced steel structural closed frame shall be provided inside the tank. Longitudinal and / or vertical structural members to connect and adequately support these frames shall be provided at corners. Horizontal diagonal members / sway bracings at corner shall also be provided.

3.3.4 Tank plates cut to size shall be welded on these frames. Plate butt weld joints at other locations shall be eliminated to avoid warping of the plates at free joints. Adequate openings in the structural frames, particularly at the bottom shall be provided to ensure complete unrestricted drainage of tank at one point. Suitable sized drain valve of size minimum 25 NB unless otherwise specified in the **Tank schedule and GA Drawing of tanks** shall be provided below the tank bottom for proper draining of the tank.

3.3.5 Complete assembled tank shall have at its bottom longitudinal steel fabricated bearer beams welded to it. The tank with bearer will rest over number of concrete blocks to be provided by purchaser. The tank shall be adequately bolted / welded to the concrete blocks. Needed inserts / anchor bolts shall be furnished by the bidders. Grouting of tank over concrete blocks in approved manner shall be included in bidder's scope of work, if erection is also awarded to the bidder.

3.3.6 Where rectangular tanks are flushed in dual compartments the inside partition plate shall be well reinforced to withstand hydrostatic test pressure completely on one side throughout the full height.

3.3.7 The rectangular tank shall be designed as per good engineering practice and reference shall be taken from the book named "Theory of plates and shells" by Timoshenko. Design calculation shall be done in accordance with the above mentioned book.

3.3.8 Suitable steel structural e.g. channels shall be provided below the bottom plate so that tank can rest on the foundation / slabs through the structural supports.

3.4 **HORIZONTAL CYLINDRICAL TANK**

3.4.1 The horizontal cylindrical tank with dished ends shall be of mild steel welded construction and shall be designed in accordance with BS – 2594 / IS – 2825 / ASME as specified in the **Tank schedule and GA Drawing of tanks**. The tank shall be designed for a wind pressure and seismic coefficient as specified. While worst of these two shall be considered, the permissible stress shall be increased as per relevant code / standard.

3.4.2 The shell and dished end plate thickness shall be chosen as per design requirement but in no case the dished end and shell plate thickness shall be less than 8 mm.

3.4.3 All seams, longitudinal as well as circumferential, shall be butt-welded. Longitudinal seams should not be situated in the lower third of a tank or on the top center line.

3.4.4 All tank shall be supplied with integral saddle support and shall be designed in accordance with BS- 2594 / IS – 2825 / ASME as specified in the **Tank schedule and GA Drawing of tanks.**

4.0 **TESTING AND INSPECTION AT MANUFACTURERER'S WORKS**

4.1 **General**

4.1.1 The supplier shall provide inspection to establish and maintain quality of workmanship in his works and that of his subcontractors to ensure the mechanical accuracy of components, compliance with drawings identity and acceptability of all materials, parts and equipment. He shall conduct all tests required to ensure that the equipment and material furnished shall conform to requirements of the acceptable codes. All tests and test procedure proposed by manufacturer shall be submitted to the purchaser for their prior approval.

4.1.2 All materials used for manufacture of the equipment under this specification shall be of tested quality. Relevant test certificates shall be made available to the purchaser before the final shop inspection. In case the relevant correlating test certificates are not available, the supplier shall arrange to carry out the necessary tests required by codes at his own cost.

4.1.3 Alloy cast iron and cast steel components shall be tested for both physical and chemical properties in absence of purchaser's representatives. Test bears shall be either integral or taken from the same ladle of material as the casting they represent.

4.1.4 All materials including valves, instruments, pipings, flanges, counter flanges etc. shall be procured from BHEL approved manufacturer's only. Dealers are not acceptable.

4.2 **TESTING AND INSPECTION FOR TANKS**

4.2.1 The scope of testing and inspection for pressure vessel covered in this specification shall generally comprise of the following:

i) Examination and approval of fabrication drawings to ensure that design, materials and fabrication details meet requirement of code and specifications. Purchaser will review these drawings for interface problems and conformity with the general arrangement drawings and accord their approval.

ii) Examination of materials of construction and identification with material test certificates.

iii) All the plates of thickness 50 mm or more shall be ultrasonically tested to ensure freedom from laminations.

iv) Ensuring the relevant weld procedure and welder qualification tests are in accordance with stipulated code requirements.

v) Inspection of dished end flanges and alloy steel bolting where required.

vi) Inspection during fabrication at appropriate stages including fit ups.

vii) For all butt welds, the root run and final run shall be subjected to dye-penetrate or magnetic particle inspection. For all fillet welds the final run shall be subjected to dye-penetrate / magnetic particle examination.

viii) Examination of radiographs including radiographic techniques, supervision of other non - destructive tests and heat treatment procedure as required by codes and specifications.

ix) Examination of internal cleanliness before final closure.

x) Dimensional examination of completed vessel including axis marking, proof marking, match marking etc.

xi) Witnessing of hydrostatic, pneumatic or vacuum tests or special tests as required by the code and specification. In case of hydrostatic tests, the test pressure must be kept for a minimum of two hours.

xii) Witnessing cleanliness, preservation, packing and marking.

xiii) Stamping of vessel and issue of certificates.

xiv) All tanks under this specification shall be tested as per the relevant design and testing code / standard. Supplier shall submit the detailed testing procedure for the tanks during detail engineering stage for BHEL / customer / consultant's approval and approved document shall be adhered by them and testing shall be done accordingly without any commercial implication.

4.2.2 **NON - PRESSURE TANKS**

The scope of testing and inspection for non-pressure tanks covered in this specification will comprise of the following:

i) Identification of materials to manufacturer's test certificates.

ii) Inspection of plate edges after edge preparation and checking curvature against templates if shell plates sent after rolling.

iii) Checking of dimension and match marking.

iv) Bottom testing

a. After the bottom and bottom course of shell plates have been welded, the bottom shall be tested by pumping air beneath the bottom plates to a pressure just sufficient to lift them off the foundation and in any case not less than 100 mm water gauge. The pressure shall be held by construction of a temporary dam of clay or other suitable material around the tank periphery. Soap suds or other suitable material shall be applied to all joints for detection of leaks.

b. Fuel oil may be used instead of air and soap suds to test for leaks, subject to prior agreement and approval of purchaser.

c. Alternatively, the bottom seams may be tested by vacuum box method subject to prior agreement and approval of the purchaser. The vacuum box used shall comply with IS- 803, 1976 (figure-24)

v) Shell testing

The shell of fixed roof non - pressure tanks shall be tested after completion of roof. Testing shall be done by filling the tank with water to the level of the top leg of the top curb angle and noting any leaks.

vi) Roof testing

The roof of the tank shall be tested by pumping air under the roof plates while the tank is still full of water. In the non - pressure tank, the roof shall be tested to a pressure of 75 mm of water gauge and in case of pressure roof tanks, to a pressure of one and a quarter times the pressure at which the pressure sides of the pressure / vacuum relief valve is designed to open. Soap suds or other suitable material shall be applied to all joints for detection of leaks.

vii) All field-testing shall be performed prior to any painting or coating application.

4.3 REPAIR OF LEAKS

4.3.1 All leaks detected during testing shall be repaired to the satisfaction of the purchaser and on completion retested for leakage as per approved procedure.

4.3.2 In the joints between roof plates only, pin hole leaks may be repaired by mechanical caulking. However, where there is any indication of considerable porosity, the leaks shall be sealed by laying down an additional layer of weld over the porous sections.

4.3.3 In all other joints, whether between shell plates or bottom plates or both, leak shall be repaired only welding and if necessary, after first cutting out the defective part.

4.3.4 When the tank is filled with water for testing, defects in the shell joints shall be repaired with the water level at least 300 mm below the joint being repaired.

4.3.5 No welding shall be done on any tank unless all lines connecting thereto have been completely blanked off. No repairs shall be attempted on tanks while filled with oil, nor any tanks which have contained oil until the tanks have been emptied, cleaned and freed from gas in a safe manner. No repair shall be attempted on a tank which has contained oil except in a manner approved in writing by the purchaser, and in absence of the purchaser's inspector.

SECTION-II

SUB-SECTION-A

GUIDANCE FOR DESIGNING AND FABRICATION OF STEEL CONSTRUCTIONS FOR RUBBERLINING