DRAWING NO: 1-99-512-40870

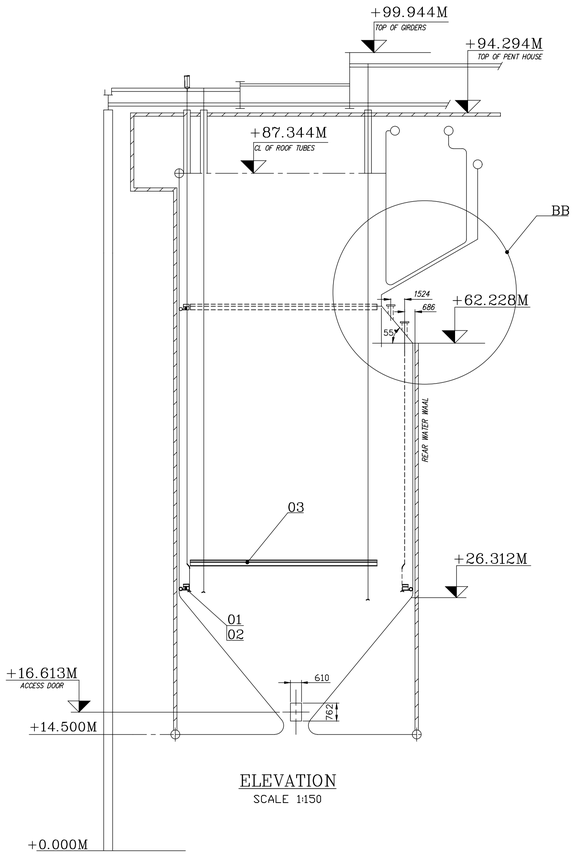

ELEVATION
SCALE 1:150

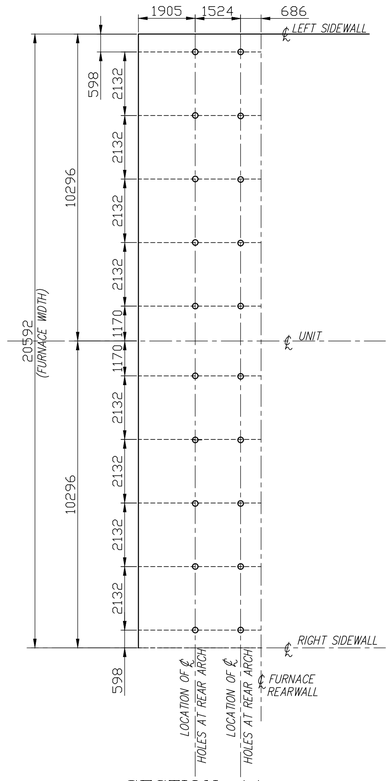

SECTION–AA
SCALE 1:100

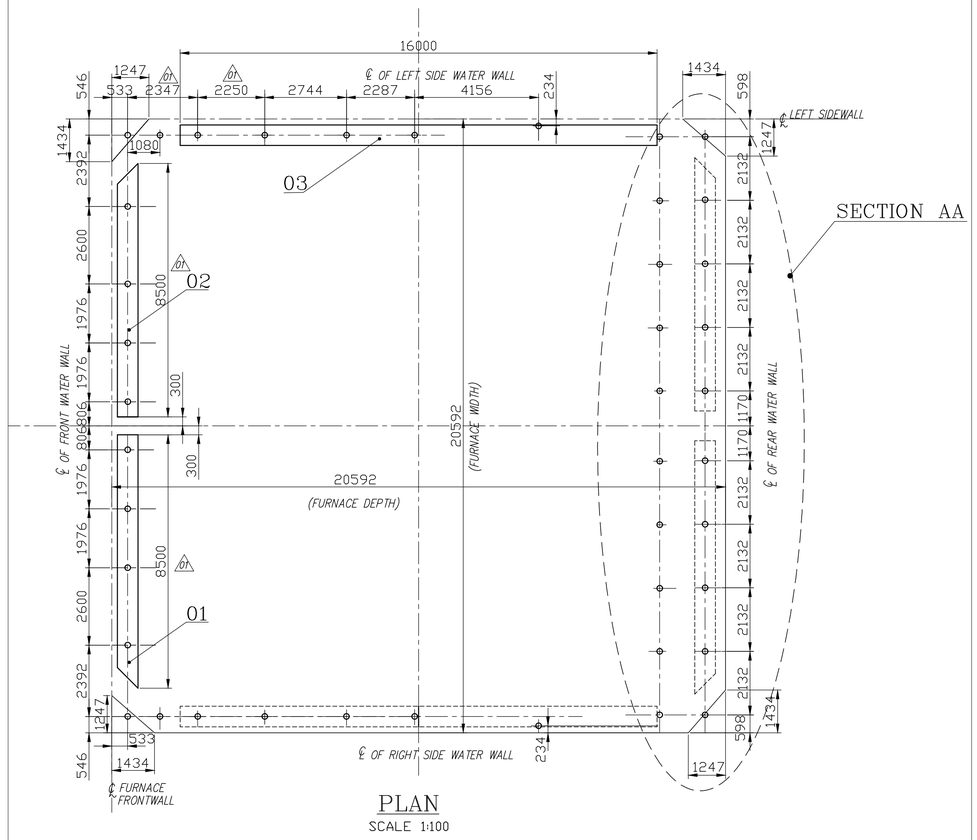

PLAN
SCALE 1:100

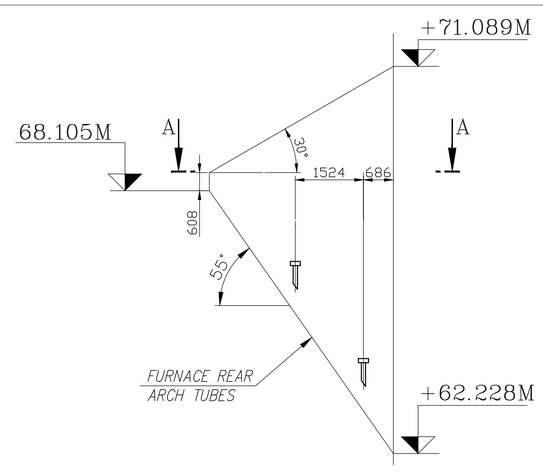

DETAIL BB
SIDE ELEVATION
DEFLECTION ARCH
SCALE 1:100

NOTES: –

1. REFERENCE DRAWINGS :
   - A. 0-00-022-77066 –GENERAL ARRANGEMENT OF BOILER SECTIONAL SIDE ELEVATION
   - B. 0-00-022-77068 –GENERAL ARRANGEMENT OF BOILER SECTIONAL PLAN
   - C. 0-00-027-34492 –PPA – PLAN VIEW "B–B" ROOF TUBES FURNACE
   - D. 0-00-027-34490 –PPA – PLAN VIEW "A–A" HDRS & LINKS (FURNACE)
   - E. 0-00-027-34495 –PPA – PLAN VIEW "D–D" FURNACE REAR ARCH TUBES
2. CABLE OPENING WITH CAPS AND OTHER ACCESSORIES RELEASED UNDER PG-MA 18 – 001.
3. ALL THE ELEVATIONS ARE WITH RESPECT TO EL(+)0.00M,FINISHED GROUND FLOOR LEVEL OF TG BUILDING WITH,WHICH CORRESPONS TO RL 23.25 M.

SCOPE OF EQUIPMENT.

HOIST, TOP LIMIT SWITCH WITH COMMON CONTROL – PNEUMATICALLY OPERATED.

SUSPENSION SYSTEM – Suitable steel wire rope with suitable length, upto Access Door (Min.100 metres),
Secondary wire rope with suitable length (Min.100 metres).
Rope clamp,end fittings, "D" shackle and thimbles.

PLATFORMS – Split-type platforms – suitable for 610mmx762mm access door with guardrails, suitable stirrups with retainers..
Connection blocks & tubes with fasteners.
Wall roller assembly with mounting bracket & fasteners.

POWER SUPPLY – Pneumatic Hose with necessary fittings.

SAFETY DEVICES – All safety devices.
[A sensing device (Sky lock safety device) that locks the wire as soon as it accelerates beyond a preset speed either gradual or instantaneous shall be provided.]
Hoist capacity : 800 kg.
Each platform is driven by two hoists in tandem operation
There are 6 hoists for the three platforms common for two boilers.

VARIANT NUMBER	ITEM NUMBER	DESCRIPTION	STD	DRAWING NUMBER	ITEM NO	MATERIAL CODE	A/C/P	UNIT	UNIT WEIGHT	GS	ZONE
	03	PLATFORM WITH BOTH ENDS FLAT. LENGTH: 16.000 M.				SUB-DELY		ST	900.000		
								L	1		
	02	PLATFORM WITH 45 DEG. CHAMFER AT LEFT SIDE. LENGTH: 8.500 M.				SUB-DELY		ST	600.000		
								L	1		
	01	PLATFORM WITH 45 DEG. CHAMFER AT RIGHT SIDE. LENGTH: 8.500 M.				SUB-DELY		ST	600.000		
								L	1		
					VAR NO	MATERIAL SPECN		DI	QUANTITY		

CUSTOMER NO. 1817

CUSTOMER: APGENCO

ANDHRA PRADESH POWER GENERATION CORPORATION LIMITED
1X800 MW DR NTPPS, STAGE – V, UNIT-8, VIJAYAWADA
(BTG PKG)

CONSULTANT:

DEVELOPMENT CONSULTANTS PVT. LTD.
CONSULTING ENGINEERS
KOLKATA

BHEL Maharatna Company

BHARAT HEAVY ELECTRICALS LTD.
HIGH PRESSURE BOILER PLANT
TIRUCHIRAPALLI

CAUTION: The information of this document is the property of BHARAT HEAVY ELECTRICALS LTD. It must not be used directly or indirectly in any way detrimental to the interest of the company.

355-052

Bharat Heavy Electricals Ltd
UNIT: HIGH PRESSURE BOILER PLANT
TIRUCHIRAPALLI – 620014

	NAME	SIGNATURE	DATE
DRN	R S YADAV	–SD–	17.02.2017
CHD	NOORUL FAZIL	–SD–	17.02.2017
APPD	ARULPRABHU	–SD–	17.02.2017

DEPT	CODE	ALL DIMENSIONS ARE IN MM	PROJECTION	SCALE	WEIGHT (Kg)	REF TO ASSY / OLD DWG
HS	240			1:150 1:100	8200	

TITLE: FURNACE MAINTENANCE PLATFORM (2-WC) (PNEUMATICALLY OPERATED)

DRAWING NO : 1-99-512-40870 REV 02

REV	DATE	ALTERED : NOORUL FAZIL
02	22/07/2017	CHD & APPD : ARULPRABHU R
ZONE	DRAWING REVISED TO ACCOMMODATE ENGG. CHANGES IN CABLE OPENINGS.	
REV	DATE	ALTERED : N. FAZIL
01	22.06.17	CHD & APPD :ARUL PRABHU
ZONE	DRG. REVISED AS PER CUSTOMER COMMENTS ON TITLE & FFL ELEVATION	