DRAWING NO: 1-99-512-40858

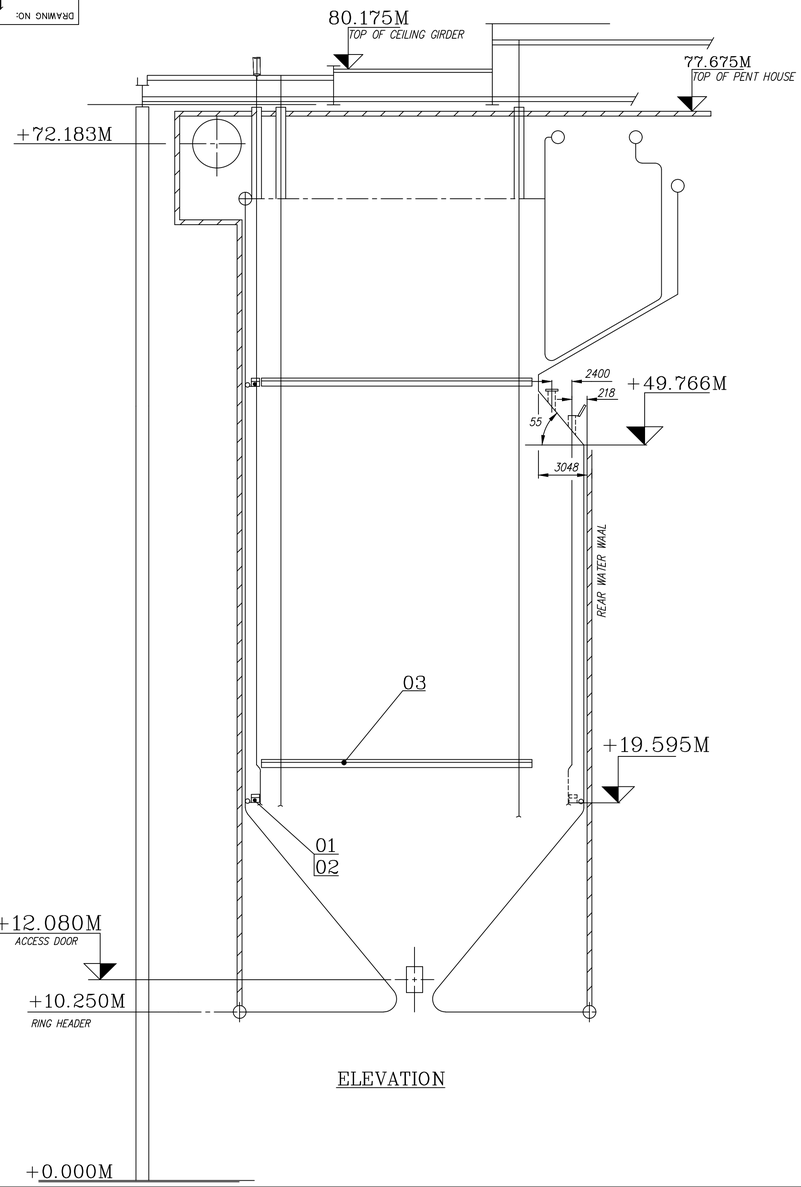

ELEVATION

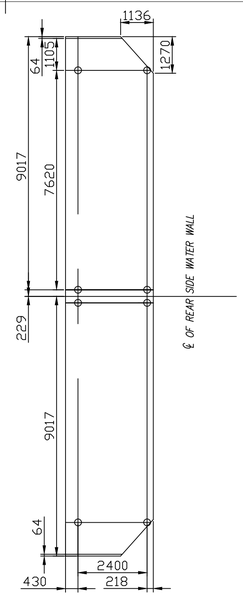

SECTION–AA

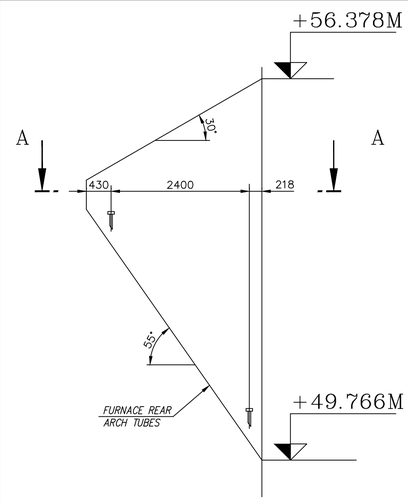

SIDE ELEVATION
DEFLECTION ARCH

ALL DIMENSIONS ARE IN MM
FOR TOLERANCES OF UNTOLERANCED
DIMENSIONS DURING MANUFACTURE
REFER RELEVANT QCP / QP

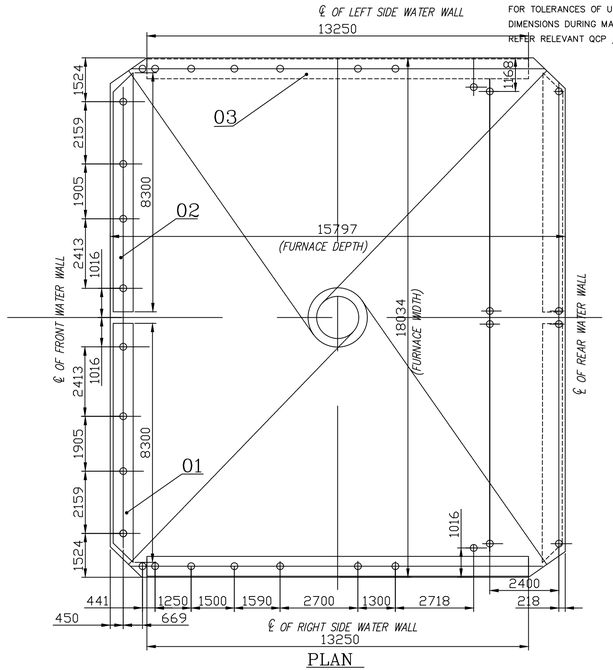

PLAN

VARIANT NUMBER	ITEM NUMBER	DESCRIPTION	STD	DRAWING NUMBER	ITEM NO / VAR NO	MATERIAL CODE / MATERIAL SPECN	A/C/P / DI	UNIT / UNIT WEIGHT / QUANTITY		GS	ZONE
	03	PLATFORM WITH BOTH ENDS FLAT LENGTH: 13.250 MTRS.					ST		700.000		
						SUB–DELY	L		1		
	02	PLATFORM WITH 45 DEG. CHAMFER AT LEFT SIDE. LENGTH: 8.300 MTRS.					ST		500.000		
						SUB–DELY	L		1		
	01	PLATFORM WITH 45 DEG. CHAMFER AT RIGHT SIDE. LENGTH: 8.300 MTRS.					ST		500.000		
						SUB–DELY	L		1		

NOTES:–

1. REFERANCE DRAWINGS :
   - 0-00-027-34551 – PPA – PLAN OVER ROOF TUBES
   - 0-00-027-34553 – ASSY. OF REAR ARCH SCREEN & HANGER TUBES.
   - 0-00-022-77060 – GA OF BOILER SECTIONAL PLAN.
   - 0-00-022-77059 – GA OF BOILER SECTIONAL SIDE ELEVATION.
   - 0-00-027-34541 – PPA–GA OF PRESSURE PARTS
2. Cable opening with caps and other accessories released under PG–MA 18 – 001.
3. Power Points To Be Provided At Column S8 At EL– 10250 6KVA, 440V,50HZ at six points.

SCOPE OF EQUIPMENT.

HOIST, TOP LIMIT SWITCH WITH COMMON CONTROL – ELECTRICALLY OPERATED.

SUSPENSION SYSTEM – Suitable steel wire rope with suitable length, upto Access Door (Min.90 metres).
Secondary wire rope with suitable length (Min.90 metres).
Rope clamp,end fittings, "D" shackle and thimbles.

PLATFORMS – Split–type platforms – suitable for 610mmx762mm access door with guardrails, suitable stirrups with retainers..
Connection blocks & tubes with fasteners.
Wall roller assembly with mounting bracket & fasteners.

POWER SUPPLY – All electrical items required for safe operation
Power supply cable and yokes for suitable length of platforms.

SAFETY DEVICES – All safety devices.
[A sensing device (Sky lock safety device) that locks the wire as soon as it accelerates beyond a preset speed either gradual or instantaneous shall be provided.]
Hoist capacity : 800 kg.
Each platform is driven by two hoists in tandem operation
There are 6 hoists for the three platforms for one boiler.

REV	NATURE OF REVISION & DESCRIPTION	DATE	DRAWN	CHECKED	APPD.
03					
02					
01					

CLEARED		
DEPT.	SIGNATURE	DATE
MECH.		
ELEC.		
CIVIL		
I & C		

BHEL CUSTOMER No: 0686

OWNER: SEPC POWER PRIVATE LIMITED
S–2, Technocrat Indl. Estate, Balanagar, Hyderabad

OWNER'S CONSULTANT: Fichtner Consulting Engineers (India) Pvt Ltd.
Ganesh Chambers, 64, Eldams Rd, Teynampet, Chennai,Tamil Nadu–600018

CUSTOMER: Megha Engineering & Infrastructures Ltd.
S–2, Technocrat Indl. Estate, Balanagar, Hyderabad

CUSTOMER'S CONSULTANT: TPSC (INDIA) PRIVATE LIMITED
(Wholly owned subsidiary of Toshiba Plant systems & Services Corporation, Tokyo, Japan)
A–1 Module, D–Quadrant, 2nd & 9th Floor, Cyber Towers,
Hi–Tec City, Madhapur, HYDERABAD – 500 081, INDIA.

PROJECT: 1 X 525 MW TUTICORIN TPS, STAGE–IV (UNIT–1)
THOOTHUKUDI DISTRICT, TAMILNADU

355–029 BHARAT HEAVY ELECTRICALS LIMITED.,
HIGH PRESSURE BOILER PLANT UNIT;
TIRUCHIRAPALLI-620014

TITLE : FURNACE MAINTENANCE PLATFORM(2-WC)

DWG. NO. 1–99–512–40858 REV. 00

DRAWN : R S YADAV CHECKED : M VENKATESWARLU SCALE : 1:70
REVIEWED : ARULPRABHU DATE : 07.03.2017