BHEL :: BAP :: RANIPET

PURCHASE DEPARTMENT

NOTICE INVITING TENDER

ANNEXURE-A TO OPEN TENDER

Tenders are invited from prospective manufacturers for supply of Thermostat for various projects with technical specification TECI:GEN:TH:013:REV 03, Dt:06.08.2016

ENQ SNO	Material Code	Material Description	Qty	UNIT
001	P85866509	THERMOSTAT, L -400 MM WITH THERMOWELL	1000	NO

1. Pointwise specific confirmation to BHEL SPECIFICATION to be given in the Techno-Commercial Bid without fail; otherwise offer may not be considered.

2. In case of supplies from any new foreign suppliers, who are not in BHEL Product Material Directory, material inspection shall be carried out by Third Party Inspection Agency like Lloyds or SGS or BVQI prior to shipment at Supplier's work and total inspection charges shall be borne by the supplier only. (Quoted price shall be inclusive of TP inspection charges). For indigenous suppliers, first inspection will be carried out by BHEL only and subsequent inspections will be by BHEL/BHEL approved Third Party Inspection Agencies.

3. Offer to be submitted through Enterprise Procurement System (EPS) only .In case of direct hard copy offers, the same will be returned to the supplier without opening.

4. Pre Qualification Criteria - (1) The supply shall be as per our Technical Specn: TECI:GEN:TH:013:REV 03 Dated 06.08.2016 drawing and quality requirement as QP:E:842 Rev 00, deviation if any, the “deviation summary “ shall be submitted for our technical evaluation.
(2) The new supplier/First time supplier to BHEL Ranipet shall fill all the details as called in the Supplier’s Registration Form through

5.BHEL reserves the right to verify the information provided by vendor. In case the information provided by vendor is found to be false / incorrect, the offer shall be rejected.

Incase of any clarification, kindly email to gravi@bhelrpt.co.in / psureshkumar@bhelrpt.co.in / 04172 284032 / 284958 between 0830 hrs to 1630 hrs

Annexure–A1 to Enquiry
Essential Commercial Terms & Conditions
(To be filled in full and to be submitted along with offer)

SL. NO.	DESCRIPTION	BHEL'S REQUIREMENT	SUPPLIER'S COMMENTS
01.	PRICE	Firm till completion of order.[offer with **P**rice **V**ariation **C**lause is not acceptable]	
02.	DELIVERY TERMS	FOR DESTINATION	
03.	DELIVERY PLACE	BHEL RANIPET STORES	
04.	PACKING&FORWARIDING	To be included. [if extra indicate in %]	
05	FREIGHT & INSURANCE	To be included. [if extra indicate in %]	
06	EXCISE DUTY in %	To be indicated by vendor. [CENVAT Copy to be provided along with supply]	
07	SALES TAX in %	To be indicated by vendor. [concessional form 'C' will be given]	
08	OCTROI: If any, to supplier's account only. [since enquiry Destination has been given, vendor has to ascertain the applicability of OCTROI].		
09	PAYMENT	100% within 45 days (for registered MSE vendors) / 90 days (for non MSE vendors) after receipt & acceptance of materials at our end. Please confirm your acceptance for the same. In the event of any deviation in the above payment terms the following loading on your base rate will be done as below." Base rate of SBI (as applicable on the date of techno commercial bid opening) + 6% shall be considered for loading for the period of relaxation sought by you")	
10	DELIVERY PERIOD	To be indicated by vendor	
11	L.D. CLAUSE: As indicated in Enquiry (as per IMPORTANT NOTE) Confirmation L.D. Clause as indicated in Enquiry @0.5% per week subject to a maximum of 10% for the delayed delivery. (In case any bidder is not accepting the above penalty for delayed supply, the offer of bidder shall be loaded to the extent to which it is not agreed by the bidder. Example: If the supplier has accepted for maximum 5 % penalty clause, then balance 5% will be loaded for evaluating lowest bidder)		
12	OFFER VALIDITY	Minimum 90 days from the date of tender opening.	
13	INSPECTION BEFORE DESPATCH	Will be done at Vendor's Works before Dispatch by BHEL / BHEL's customer / BHEL's authorized Inspection agency	
14	TEST CERTIFICATE	Required	
15	**BHEL Standard Guarantee Clause**: Your confirmation to our standard Guarantee clause that the materials are to be guaranteed for satisfactory performance for a period of twelve months from the date of commissioning / putting into use (or) eighteen months from the dispatch which ever is earlier and if any defect is noticed during the above period, the same shall be rectified/replaced free of cost on Ranipet/ Destination basis within a reasonable time. To this effect a Guarantee certificate should be sent along with the dispatch documents in the event an order		
16	**Risk Purchase Clause:** The purchaser at his option will be entitled to terminate the contract and to purchase elsewhere at the risk and cost of the seller either the whole of the goods or any part which the seller has failed to deliver or dispatch within the time stipulated as aforesaid or if the same were not available, the best and the nearest available substitute thereof. The seller shall be liable for all losses and extra expenditure which the purchaser may sustain by reason of such risk purchases in addition to penalty at the rates of LD clause agreed.		
17	Place of Manufacture & supply (Along with State)		
18	Vendor status like Micro / Small / Medium (Latest copy of supporting document shall be furnished along with offer)		
19	RA terms & conditions as given in Annexure B		

The above format shall be completely filled and deviation if any shall be clearly spelt out. The columns which are not applicable shall be mentioned as "Not applicable". No column should be left without filled up and this may be liable for rejection of offer.

Date: SIGNATURE WITH SEAL

ANNEXURE – A2 TO ENQUIRY
REQUIREMENT OF TECHNICAL DETAILS /CONFIRMATION
(To be filled in full and to be submitted along with offer)

S.NO	DESCRIPTION	BHEL'S REQUIREMENT	SUPPLIER'S COMMENTS
01	SPECIFICATION	Clause wise / Point wise confirmation to be given in TOTO for all specifications& to be submitted along with offer. (i.e. Xerox copy of specn duly filled with your acceptance / comments duly signed & sealed).	
02	Specification	TECI:GEN:TH:013:REV 03	
03	Quality specification	QP:E:842 REV 00	
04	Drawings	3-79-090-00407	
05	SPECIFICATION DEVIATION DISPOSITION REPORT (SDDR)	Attached SDDR to be filled & submit along with offer.[In case of NO deviation is taken, NIL report to be submitted]	

Date: VENDOR's SIGNATURE WITH SEAL

(To be submitted along with the offer)

SPECIFICATION DEVIATION DISPOSITION REPORT				
Specn		Item		
Enq.No & Date				
Vendor Name				
SPECN				
Page	Clause	Details Of Deviation With Reason	Disposition By Bhel	
Signature Of Vendor			Reviewed By	
"AGREED DEVIATION " if any to be incorporated in the PO in the event of order.			APPROVED BY	

The above Commercial Terms and Conditions are confirmed by us for this tender. In case there is a variance between the conditions confirmed above and the main offer, we certify that the Commercial Terms and Conditions given above is applicable. Such Commercial Terms and Conditions in the main offer may be considered null and void by the Purchaser and this is accepted by us.

Date: VENDOR's SIGNATURE WITH SEAL

MASTER COPY

BHEL RANIPET	STANDARD CHECK LIST FOR THERMOSTAT (Indigeneous)	
REF.NO.	REVISION NO.	EFFECTIVE DATE
CKL:E:808	OO	30 10 2002

TITLE : THERMOSTAT

		SIGNATURE
PREPARED BY :	K C GANDHI PARIMALAM	
REVIEWED & APPROVED BY :	S ANIL KUMAR	

ISSUED & CONTROLLED BY :: QUALITY ASSURANCE
BHEL, RANIPET – 632 406

DOCUMENT STATUS

☐ INFORMATION COPY

☐ CONTROL COPY

* It is a control of copy only if the mark against the control copy is in other than black color. Otherwise it will be an uncontrolled copy.
Check for current revesion.

ISSUED TO :

CONTROL COPY NO.

BHEL RANIPET	STANDARD CHECK LIST FOR THERMOSTAT (Indegenious)	
REF.NO.	REVISION NO.	EFFECTIVE DATE
CKL:E:808	OO	30 10 2002

RECORD OF REVISION

REV.NO	Effective Date	Remarks
00	30 10 2002	Original Issue

FOLLOWING TESTS / CHECKS ARE TO BE DONE AS PER BHEL PURCHASE SPECIFICATION/DRGS. The vendor has to do 100% tests / checks as above and 10% of samples will be selected by BHEL during final inspection for acceptance of the lot.

1. Visual Inspection check for any physical damage
2. Check for dimension including process connection
3. Physical requirement (for type, range, make, finish, tag number and contact rating etc.,) .
4. Functional Test
5. Accuracy test and repeatability test } As per Spec/drg/Datasheet as applicable
6. Over temperature test }
7. Insulation resistance test with 500V DC for one minute and IR value shall not be less than 1 meg-ohm.
8. High voltage test with 1.5 KV for one minute between live points and earth.
9. Thermo well material test certificate as per relevant standard/Drgs
10. Check on thermo well dimension
11. Hydraulic test for thermo well at 150% of design pressure (there shall not be no leakage).
12. Review of internal inspection records of materials of burden tube or bellows (as applicable) movement, shank, and connection etc.
13. Verification of cable gland, plug and socket (as applicable) as in the purchase specification / drawing being approved by BHEL.
14. IP 55 Test certificate shall be submitted.

All other requirements shall be ensured as per BHEL Purchase Order and BHEL Specifications/Drawings.

R 05-229/C

CAUTION THE INFORMATION ON THIS DOCUMENT IS THE PROPERTY OF BHARAT HEAVY ELECTRICALS LTD IT MUST NOT BE USED DIRECTLY OR INDIRECTLY IN ANY WAY DETRIMENTAL TO THE INTEREST OF THE COMPANY

DRAWING NO 3-79-090-00407/01

TEMPERATURE SETTING DIAL WITH LOCKABLE KNOB SHALL BE PROVIDED INSIDE THE COVER

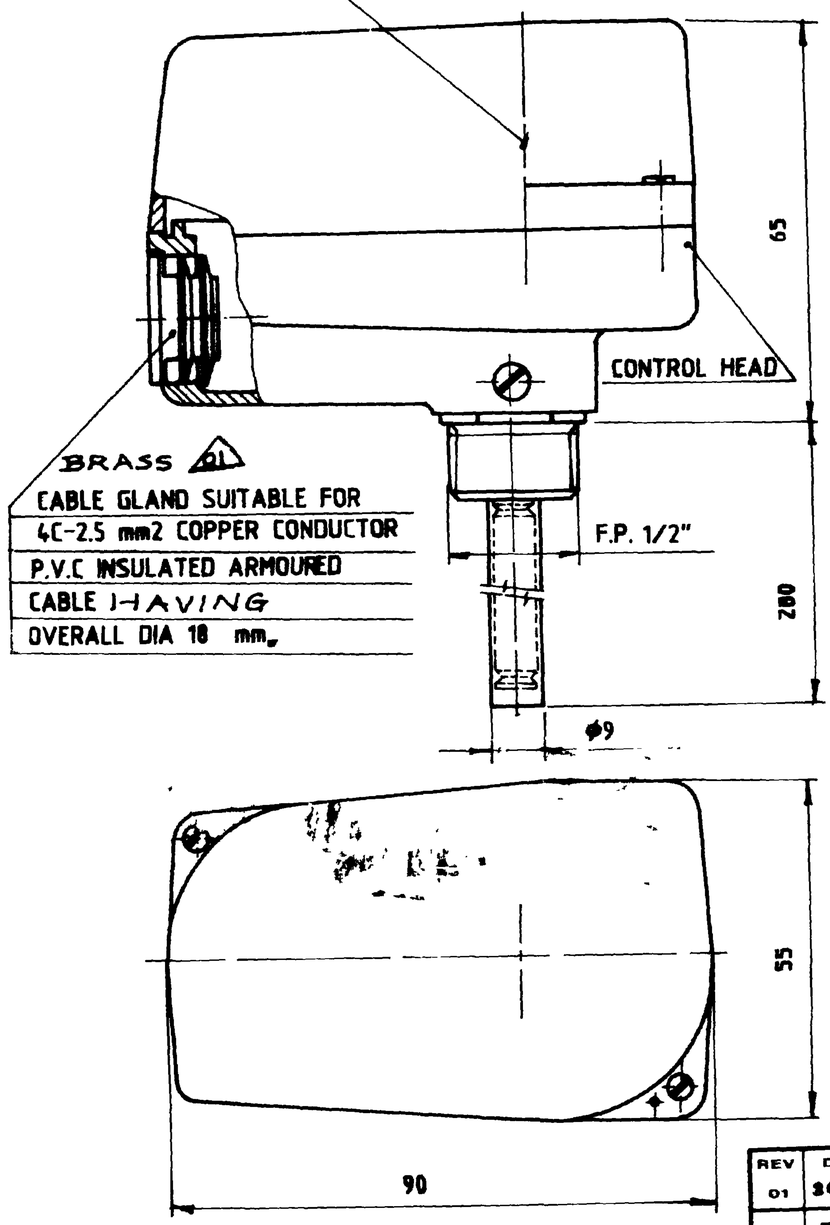

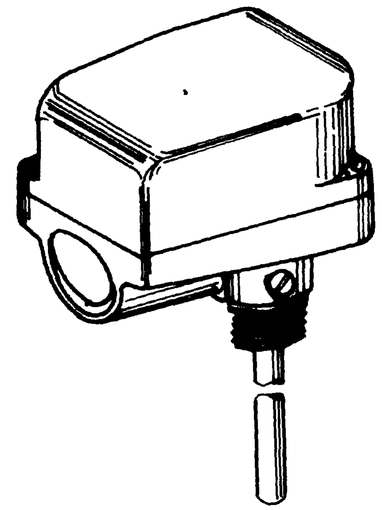

SPECIFICATION

1 SETTING RANGE 90 - 190°C
2 COVER SHALL BE OF ANODISED ALUMNIUM AND SUITABLY GASKETED TO MAKE IT WEATHER PROOF .
3. TO PROVIDE CHANGE OVER CONTACT SUITABLE FOR 1 PH, 240V, 50HZ INDUCTIVE .
4 ACCURACY OF THE DIAL SETTING ±5° C.
5. SHEATH MATERIAL OF THE STEM SHALL BE STAINLESS STEEL.
6. MAKE :- LANDIS AND GYR , ZUG , SWITZERLAND
TYPE :- RAK 12. 0063
7. THIS SUPERCEDES DRG NO 3-79-090-00047 REV-04

REF:PRQA:590 FOR PAINTING
REF:PRQA:500 FOR UNTOL.DIMNS

VARIANT NO	ITEM NO	DESCRIPTION	STD	DRAWING NO	ITEM NO.	MATL CODE	A/C	UNIT/DI	UNIT WT.
	1	THERMOSTAT				97 - 258 -002			0 6
					VAR NO	MATL SPEC			QTY

TYPE OF PRODUCT OR NAME OF CUSTOMER/PROJECT: ELECTROSTATIC PRECIPITATOR 01

Bharat Heavy Electricals Ltd.,
BOILER AUXILIARIES PROJECT
RANIPET 632 406

	NAME	SIGN	DATE
DRN	M.BOOPATHY	M.	9-1-87
CHD	M. RAVIKUMARTHI		9 1 87
APPD	B. SIVARAM		9 1 87

NO OF ITEMS

REV	DATE	ALTERED / CHECKED
01	30 06 93	

TITLE INCLUDED.
Brass material indicated for gland

DEPT	GRADE OF UNTOL DIM	SCALE	WEIGHT (Kg)	REF /OLD DRG
ARCS	C/M/F	—	—	3-79-090-00047/04
CODE 062				

ITEM NO

TITLE: THERMOSTAT

CARD CODE: U 01

DRAWING NO. 3-79-090-00407

REV 01

SIZE A

ANNEXURE –B
GENERAL TERMS & CONDITIONS
(FOR GUIDANCE TO THE SUPPLIERS)

A] Submission of Offer

a)Invitation for bid

Tenders are invited through electronic mode from eligible suppliers in case of open tenders and from suppliers to whom the enquiry is addressed in case of Limited / Single Tender.

The offers shall be posted into the system before the date and time specified in the tender.

The offer shall be sent on single part / two part / three part basis as specified in the main tender document.

Bids shall be submitted through e-Procurement portal, https://bheleps.buyjunction.in, of M/s mJunction Services Limited who are our solution provider.

b)Hardware and Software requirements for participating in e-tender

Requirement for participating in e-Procurement is as under:
i)A Computer with internet connectivity (Internet Explorer Version 9 and above.
ii)Digital Signature Certificate (Class 3- SHA2-2048 BIT- with both Signing and Encryption component separately).
iii)JAVA (Version 1.8 Update 45).

c)Instructions for Registered Suppliers

For all types of tenders (Single / Limited / Open) an automated email alert regarding issue of the Tender will be sent by the e-procurement portal to all Suppliers registered with BHEL, Ranipet for the item/s for which the tender is issued.

In case of open tenders, Registered suppliers with registered DSC will have to login with their user id/password & DSC and search for the Open Tender. On clicking the "Interest" button, they will get attached to that particular Open Tender.

Registered suppliers without DSC will have to first register themselves in https://bheleps.buyjunction.in as new supplier by clicking the "New Supplier" button.

To know the procedure for obtaining Digital Signature Certificate (DSC), suppliers who are not having the DSC are advised to visit our website www.bhel.com →Tender Notifications →Sample Checklist.

d) Instructions for new suppliers wishing to bid against open tenders

New, unregistered suppliers wanting to bid against open tender/s will have to first register themselves in https://bheleps.buyjunction.in as new supplier by clicking the "New Supplier" button.

After entering the Income Tax Permanent Account Number (PAN) details and pressing "Enter", they have to click the "Interested" button against the respective BHEL Unit for which they want to participate in the Open Tender and also fill up other relevant Company information as a one-time activity.

Then, a box for filling in a "preferred login id" will appear at the top of the page. After giving the "preferred login id" and then clicking the "Next" button, Supplier would have to map their DSC (which will be activated by M/s mJunction Services Limited), if available. Or else, by pressing "skip" button and selecting relevant procurement category from the list available in the next page and "agreeing" to the BHEL's terms & conditions, user id and password will be generated/activated once in 2 hours and mailed to their registered

email id. Using this user id and password, Supplier has to login and map the Digital Signature Certificate they have purchased to their code. The DSC will then be activated by M/s mJunction Services Limited.

As required by the tender, the necessary documents have to be filled-in online, in the provided template. Additional documents required are to be scanned and uploaded as .pdf file. Suppliers are advised to take note that the maximum space that is provided for uploading the documents that are to be attached is 300 MB. However the size of an individual document cannot exceed 10 MB. For any clarification on submission of offer on line, attention of the Supplier/s is invited to our document "Supplier Manual" hosted in the home-page of the e-procurement portal. During normal business hours, helpline maintained by the service provider mJunction is available for clarifying any doubts of supplier/s. The helpline numbers are 09840704941 or 09500199108.

Typical documents that would be required as part of tender submission would be

a) ***Complete technical Offer*** with details, catalogues, as applicable.

b) ***Un-priced bid*** (i.e. Bid without the Price) as per given format, if any.

c) ***Filled-in BHEL's Standard Terms & Conditions*** as per Annexure enclosed with the Tender Document,

d) ***Deviation summary*** submitted in two parts – giving the summary of technical deviations separately and the commercial deviations separately, if any and

f) ***Supporting documents*** to substantiate equivalent material specifications / sections, where quoted for.

g) Where asked for, ***Client list*** with their full address including detail of contact person with phone no., fax no. & e-mail ID (if any) to whom the same / similar items are supplied in the past two years. The date of supply may also be indicated, against each client.

h) ***Bidders who are not already registered with BHEL Ranipet*** are requested to submit the Supplier Registration Form (SRF) online and a hard-copy of the same has to be sent addressed to the tender issuing authority for evaluating and registering as an approved vendor. The Supplier Development Cell (SDC) of BHEL, Ranipet would process the SRF for evaluation / registering the Supplier.

Suppliers can also upload their credentials by way of submission of Performance certificate/s issued by their customer/s detailing the quantity supplied and specification along with the un-priced PO copies and proof of supply along with the offer.

Technical acceptance of offer by BHEL shall be based on the evaluation of offer and the submitted documents.

Note

(i) The materials offered, shall conform to the specification and scope attached in the tender.

(ii) In case the offered materials are not conforming to the Enquiry material Specification, such offers would not be considered for evaluation and would be rejected.

Where equivalent specifications are offered, considering such offers will be at the sole discretion of BHEL. Wherever alternative standards / specifications are offered by Bidder, the Bidder shall provide sufficient documentary evidence to ensure equivalence to the designated standards / specifications, failing which the offer would be considered as not technically acceptable and hence shall stand rejected.

(iii) All taxes and duties payable as extra to the quoted price should be specifically stated in offers (as appearing in the online template).

Offer/s from within India shall be submitted along with CST & TIN No. / Tariff No. etc, failing which the purchaser will not be liable for payment of such taxes and duties. Our TIN No. 33024364741, CST No. 1141686/01.07.2014, BHEL ECC No. AAACB4146PXM008.

(iv) The un-priced bid shall be used to indicate relevant commercial terms such as scope of freight and insurance, applicability of duties and taxes etc. All Commercial terms are to be indicated clearly in the offer.

(vi) No changes shall be entertained once the bid is opened unless otherwise specifically agreed to in writing by BHEL.

(vii) Money values other than for those items appearing in the un-priced bid template shall not be indicated anywhere in the un-priced bid.

(viii) Time required for inspection (at Supplier's works), should be clearly given in terms of numbers of working days.

(x) **Offers sent by FAX / E-mail**: would not be entertained.

Price Bid in conformance with the specification and terms as given in the Un-Priced bid document.

Caution:

The suppliers are severely cautioned to note that the price bid document accepts the price in figures only. It does not allow the supplier to write the value by words. Therefore all care shall be exercised by the supplier while filling in the figures. Once the price bid is opened no option is available for the supplier to retract the offer under any grounds. If a supplier, for any reason whatsoever approaches BHEL with a request for change in the price, it would be treated as going back on the offer submitted. In such cases, action would be initiated by BHEL for suspending further business dealings with such suppliers as per policy of BHEL which prevails at that point of time.

Foreign / Overseas suppliers are hereby informed that offers with differential currencies are not permitted for a given tender document.

Note

(i) The price break-up should be in line with technical specification / scope of the tender. (Cost of material, packing charges, forwarding charges, freight and insurance charges shall be shown appropriately, as applicable).

(ii) Unless otherwise specified as a part of the tender condition, No Price Variation Clause will be entertained and No advance payment will be made by BHEL.

(iii) In case, there is a discrepancy in the term quoted in techno-commercial bid and price bid, the term as per the techno-commercial bid (Part I) shall hold good and the commercial term quoted in the Price Bid (Part II) shall not be considered.

(iv) In their own interest, all Tenderers are advised to double check their prices, applicable duties and taxes.

(v) The quotation should be valid at least for a period of 90 days from the tender opening date.

(vi) Indian bidders should submit the prices in Indian Rupees only.

(vii) Foreign bidders may submit their bid in foreign currency. The currency for quoting shall be selected from the drop-down menu provided.

(x) Indian Suppliers shall quote on FOR Destination basis only. Destination is BHEL, Ranipet Stores or BHEL Project Site as specified in the tender requirement. Foreign Suppliers shall quote on CFR Chennai Seaport Delivery and Insurance will be in BHEL's scope. No other delivery terms shall be acceptable. Shipment shall be arranged by the Seller on *Liner in / Liner out basis*. As per Government of India guidelines, BHEL Ranipet being a Government of India Undertaking the Bill of Lading shall be made with the Shipper as "Government of India". This shall be specifically confirmed by the Bidder.

(xi) Where the cargo is containerized, Container washing charges, stuffing charges and / or any other such charges would be to the account of the supplier, where the containers are to be stuffed at the works of the supplier.

B] Opening of Offers

a) **Tenders can be submitted up to 1400 Hours on tender opening due date. Part I will be opened on the same day at 1430 Hours. Results of the tender opening will be available for viewing for upto 7 days from the date of opening.**

b) Requests by Bidders for extension of due date will not be entertained by BHEL.

c) Price Bid opening will be done through e-mode / Reverse Auction method (English method) which will be decided after techno-commercial bid evaluation is completed. All tenderers would have to specifically give their acceptance for this in their bid/s.

Note

(i) Bids including all enclosures and supporting documents like catalogues, pamphlets, etc., shall be provided in ENGLISH language only.

(ii) In exceptional circumstances, at its option, BHEL may consider extending the due date/s for the tender openings for reasons such as (but not limited to) paucity of offers etc. However, sufficient notice would be given by BHEL for such extension.

(iii) Deviations shall be summarized and provided in a "Deviation Statement", listing the points and the deviation against each point.

(iv) BHEL reserves the right to increase or decrease the tendered quantity and to order on more than one vendor at the lowest acceptable price to BHEL. In ordering on more than one source, the ratio of quantity split will be as specified in the tender terms.

If not explicitly specified, BHEL reserves the right to split the quantity of the enquiry as follows: 70% quantity being ordered on the original lowest bidder (L1) and balance 30% on the next higher bidder/s excluding H1, who accepts the L1 price. However, the final decision to split the order rests with BHEL only.

In the event that the other than L1 suppliers do not accept the L1 price, then the balance will be reverted to the original L1 and the original L1 shall be bound to accept the balance of the enquiry quantity kept reserved for order splitting. This decision would be given by BHEL within 60 days of the price bid opening.

Notwithstanding the quantum of split that may be indicated in the main body of the enquiry, bidders are advised to note that the splitting of the orders will be decided by BHEL after the evaluation of the techno-commercial and price bids.

(v) Offers for part quantities on item level basis are not acceptable to BHEL. While tenderers can quote for some or all the tendered items, no supplier shall quote for partial quantity of any given enquiry item. Such

partial offer would not be considered in the enquiry for that item. Suppliers are to note that the evaluation unless otherwise specified will be on item level and not for the tendered items as a whole.

C] Evaluation of Offers

a) The price bids including the impact price (if any) of the technically acceptable offers alone shall be opened.

b) Offers with pre-conditions (like conditional discounts) for price are liable to be not considered / rejected. For evaluation such conditions would be removed and only the base offer would be considered for evaluation and comparison.

d) In the event of any change in scope / quantity arising out of the discussions, offerers would be given a chance to submit their revised offer / Impact bids. The option for the revised offer / impact offer will be triggered by BHEL. The Supplier then will have the facility to feed-in the revised price / impact price as per the provision given by BHEL. The impact price can be positive or negative (or nil). The impact price option shall contain only the price addition / deletion for such change in the scope / quantities, over and above the original scope and price quoted. The original price quoted would remain unchanged. The total price would then be computed by the arithmetic addition of the original price and the impact price. Where BHEL gives the option of submitting the revised offer, the impact would be computed as the arithmetic difference of the revised price and the original price.

e) For evaluating the overseas offers, CFR Chennai Sea Port price quoted will be taken into account. The cost to BHEL will be arrived at by loading the applicable customs duty project wise, insurance charges, inland transportation charges to BHEL stores and LC charges etc.,

f) For suppliers within Tamil Nadu state, as per prevailing VAT Act, VAT input credit is currently 5%.

g) BHEL reserves the right to reject without assigning any reasons / load any offer with factors other than already specified for such offers having deviations to BHEL Specifications, Standard Terms & Conditions at its discretion. The decision of BHEL in this regard shall be final.

h) BHEL reserves the right to reject an offer due to unsatisfactory past performance during tender finalisation / execution of a contract at any of BHEL projects / units or if unsatisfactory performance report is received from the party/s referenced by the supplier at any time during tender finalisation.

i) BHEL reserves the right to operate Purchase / Price preference to Government of India Undertakings, which shall be given as per the guidelines of Government of India given from time to time and / or relax the Terms and Conditions of the tender.

j) For the purpose of comparing prices, tender prices shall be converted to Indian rupees and the conversion shall be made by using the TT Selling rate of State Bank of India (SBI) prevailing on the date of opening of Techno-Commercial / Unpriced bids. If the relevant day happens to be a bank holiday, then the forex rate as on the previous bank (SBI) working day shall be taken. This exchange rate will be followed till placement of order. Tenderers may please note that even if an impact price is taken as in (d) for purpose of price evaluation and arriving at the rank; the exchange rate will be taken as explained above.

k) Unless otherwise specified, evaluation will be on individual line item basis only and ordering will be on respective L1 vendors.

l) BHEL reserves the right to conduct negotiations on the "Price" and "Other Commercial Terms and Conditions" with the lowest ranked offerer at any time after the bid opening but before the release of the Purchase Order and If so required by BHEL, Supplier may have to share their costing sheet with BHEL.

m) Bidders are required to confirm in writing in their techno-commercial document that other than themselves (the bidder) none of its group companies, concerns or affiliates etc., are participating in the tender either directly or indirectly or through any other agency under the same proprietor / common partner(s)/ common Directors. If during the evaluation of the bids it is found that the bidder has submitted the offer in violation of this condition then all the offers received from the group companies would stand rejected. If such relationship is found at a later date where the Purchase Order has been issued, then BHEL would cancel the Purchase Order and initiate suitable action/s under the contract/s including but not limited to invoking the Risk Purchase clause of the order and other applicable legal provisions / guidelines of BHEL including guidelines on suspension of business dealings. (Please see clause L sub-clause c).

D] Execution of the Order

a) BHEL will have the option to pre-inspect the materials at Supplier's works by BHEL's own inspector or by third party agency appointed by BHEL or BHEL's end customer/s. The mere act of the pre-dispatch inspection (PDI) does not absolve the Supplier from giving the specifications as agreed upon in the Purchase Order. In the case of inspection being carried out by a third party inspector (TPI) as per the extant practice, the TPI would forward the Inspection Report (IR) along with Test Certificates and other related documents to the Quality Assurance (QA) Department of BHEL. The QA department after scrutinising the report/s submitted by the TPI would issue the Material Dispatch Clearance Certificate (MDCC). Suppliers are hereby informed that materials should be dispatched only after getting the MDCC, failing which the materials may be rejected on receipt at BHEL Stores.

b) In the case of overseas suppliers Inspection call for carrying out the inspection shall be given 30 days before the scheduled contract delivery date. The Inspection date/s given by the Supplier shall be on firm basis. For local Suppliers the Notice period of Inspection shall be 10 working days.

c) Deviations, if any pointed out by the visiting Inspection team of BHEL shall be corrected and the items as per specification shall be dispatched on or before the contract delivery date after getting the MDCC.

d) The final inspection for acceptance will, however be carried out at BHEL's works at Ranipet.

e) The contract delivery date is the date of receipt at BHEL Stores for suppliers in India, applicable in the case of FOR Destination Contracts.

For ex-works contracts or FOR dispatching station indigenous contracts, the date of the Lorry way bill issued by the authorised transport carriers of BHEL / Railway Receipt / Courier Way bill / Airway bill or any such dispatch documents of carriage approved by BHEL would be considered as the Contract Delivery Date. In the case of CFR contracts with overseas suppliers, the B/L date shall be taken as the Contract Delivery Date

f) Travel & other local stay cost for the Inspectors sent by BHEL will be to BHEL account, but other Inspection Charges, if any shall be to the account of the Seller only.

g) The supplier shall arrange for packing suitably in all respects for normal transport by sea / rail / road and Materials shall be suitably protected against effect of tropical salt laden atmosphere in the event of shipment being delayed at ports / store yards and as per BHEL TDC.

h) Foreign suppliers shall dispatch on CFR agreed Sea-Port basis, according to the contract conditions. Indian suppliers shall dispatch on free delivery (door-delivery) at BHEL stores basis only. Unloading the materials at BHEL Stores would be to the account of BHEL only.

i) In the event of any short supply, it shall be the responsibility of the supplier to deliver such short supplied/ missing items on Free-of-Cost basis at BHEL stores, including customs clearances at Indian Ports in the case of foreign suppliers.

k) Terms of payment:

k.1) For Indigenous Suppliers: Unless otherwise agreed to by BHEL, the standard payment terms of BHEL shall be: For non-MSE suppliers 100% payment made directly through EFT within 90 days from the date of receipt and acceptance of materials at BHEL Stores, Ranipet or 90 days from the date of acknowledgement of receipt of materials at destination specified. If any supplier asks for payment terms other than the above specified, then suitable loading on cost will be considered. **Loading of any deviation in the payment terms w.r.t tender terms will be "Base rate of State Bank of India (SBI) (as applicable on the date of bid opening: Techno-commercial bid opening in case of two part bids) + 6%, will be considered for loading for the periods of relaxation sought by bidders.**

k.2) For MSE vendors (under Micro & Small category alone) 100% payment will be made within 45 days from the date of receipt and acceptance of materials at BHEL Stores, Ranipet or 45 days from the date of acknowledgement of receipt of materials at destination specified.

l) NOTE:

Where the destination specified is other than BHEL Stores Ranipet, for claiming payment, Supplier has to submit proof of receipt of the materials at the destination by furnishing a copy of the acknowledged despatch document (LR/RR/Courier receipt etc.) .

If the Bidder is bidding for the first time and wants to be considered as an MSE then, the Bidder shall submit document evidencing that they are an MSE along with a certificate from a Chartered Accountant certifying the status of their Unit / Works clearly specifying the address of the works which is to be considered as MSE and send the same to BHEL, Ranipet either before the tender opening date or upload it as a part of the tender document in the e-procurement portal. Where the document is submitted electronically a hard copy shall invariably be sent within a reasonable period (not exceeding 30 days) from the bid opening date for the purpose of BHEL's records. If the hard copy is not received within this specified time, then the supplier would be treated as a non-MSE. BHEL will not be responsible for any postal / courier / delivery delays.

For approved vendors the status as on the date of the bid opening as available with BHEL Ranipet's records shall be used for reckoning the status of the Bidder as an MSE or otherwise.

Offer/s received without these documents will be treated as non-MSE and order finalization will be done based on this premise. Documents submitted after Bid-opening will not be considered in this tender. This provision for MSE will apply subject to the condition that the participating MSE meets the tender requirements.

For approved suppliers, in case of any change in the MSE status, it shall be the responsibility of the Bidder to notify the change as a part of the Bid document. If at a later date it comes to the knowledge of BHEL, Ranipet that the change in the status has not been intimated by the Bidder and the order is obtained under the premise of an MSE then BHEL would cancel the pending order against this tender and take necessary steps

for suspension of the business dealing with the Bidder as per the procurement policy of BHEL. Similarly if a supplier claims MSE status after the Part I bid opening, then the same would not be considered in the tender.

In case after the bid opening it is seen that no MSE has become L1, then depending on the nature of the item, if it is not possible to split the tendered items / quantities on account of reasons like customer contract requirements of supplying one make for a given project or technical reasons like the tendered item being a system etc. then BHEL would not counter offer the L1 prices even though there may be MSE bidders within the +15% band of L1.

Other concessions for MSEs / Reserved sectors

In addition to the concessions specified above, MSE suppliers will be eligible for such other concessions as per the MSME Act 2006 and any other benefits / concessions that may be announced by the Government of India from time to time.. However, such concessions as applicable at the time of tender opening alone will be applicable. Any concessions advised after tender opening will not be considered for the current tender.

Items that are reserved for MSE and for any other items for which reservations for Indian manufacturers are notified by the Govt. Of India, such concessions as prevailing on the date of tender opening shall apply as a part of this tender conditions.

ii) Foreign Suppliers "100% thru' irrevocable & unconfirmed LC at sight within 3 weeks from the PO date through any one of our Bankers listed elsewhere in the tender conditions for 100% value (less Agency Commission, if any) valid up to the PO delivery period and 15 days thereafter for negotiation. All bank charges in India to BHEL's account and all other charges outside India to Supplier's account. **BHEL would load the price of foreign suppliers in order to bring them on common platform as per Indigenous Suppliers on the account of differential payment terms to Indigenous Suppliers. Loading of payment terms will be "Base rate of State Bank of India (SBI) (as applicable on the date of bid opening: Techno-commercial bid opening in case of two part bids) + 6%, will be considered for loading for the periods of relaxation compared to indigenous suppliers i.e. 90 days.**

m) Any incidence of tax like Income tax, Service Tax and Withholding any other similar tax / duties /levies imposed by the Government of India, or the State Government, where the BHEL Unit is located, deductible at Source, during the tenure of the Order shall be deducted by BHEL and necessary certification of the deduction (Tax deduction at Source) would be given. This is subject to the supplier fulfilling the necessary documentation as specified by the Government of India. (e.g. Tax Residency Certificate, PAN Number etc.)

n) The Guarantee period shall start from the "Date of receipt and acceptance of the materials at BHEL Stores."

o) ***Where any bidder gives extended credit period over and above that offered by BHEL, then all other Non-MSE bidders and foreign bidders would have to match the extended period of payment terms. This information would be given to such bidders after opening of the techno-commercial bids; but before opening the price bids. However bidders would not be allowed to change their price bid for purpose of confirming the extended credit period. In the event such bidder/s do not accept the extended credit period for payment, then their offer would be loaded to the extent of the differential between their offered payment terms and the revised payment terms offered by BHEL as explained above.***

E] Liquidated Damages Clause:

BHEL will levy penalty as Liquidated Damages (LD), for delay in delivery. The damages shall be at the rate of ½% per week or part thereof subject to a maximum of 10%. The contract delivery date for purpose of L.D

is the date of receipt at BHEL Stores for suppliers in India for F.O.R. Destination Contract and the date of dispatch clearance given by BHEL for overseas suppliers. For ex-works or F.O.R dispatching station contracts, the date of the dispatch document will be reckoned as the date of delivery for computing the LD. Supplier shall deduct the applicable LD from the first payment when raising the claim for the same. The applicable LD if any would be communicated by BHEL along with the dispatch clearance. It is taken by BHEL that Foreign Suppliers have confirmed their acceptance to BHEL for opening the LC for value which is the value of the order reduced by the applicable LD. The LD would apply on the undelivered portion only. In case of reasons attributable to BHEL for the delay in delivery (for e.g. delay in arranging the pre-inspection) then the delivery time would be reset to the extent of the time delay attributable to BHEL, with waiver of the LD. Delivery being the essence of BHEL's contract requirements, Unless otherwise specified the LD would apply on the undelivered portion of the contracted items. **In the event that a Supplier does not accept the LD condition above, the offer would be loaded to the extent of the shortfall with respect to upper limit specified above.**

F) Miscellaneous

i) Role of Principals and Agents:

BHEL will deal directly with indigenous manufacturers only.

BHEL strongly discourages the engagement of Agents in India by foreign principals, to deal with BHEL, in BHEL's tenders.

BHEL will not enter into any correspondence with an Indian Agent.

The Indian Agent will not be extended the privilege given to the principals, such as that of attending the tender openings, attending technical discussions, commercial discussions or price negotiations and such like.

In case, in spite of the above, a foreign principal insists on engaging an Indian Agent, It is made clear by BHEL that:

It is the sole responsibility of the foreign principal to ensure the Agent does not represent any other foreign principal in a given tender.

An undertaking to this effect shall be given by the foreign principal that his / her Agent does not represent any other foreign principal in the tender. This document shall form a part of the techno-commercial offer.

A Principal shall authorise only one Agent to quote against each BHEL's tender. In the event a Principal authorises more than one agent to quote against a BHEL's tender, then all such offers will be rejected by BHEL in that tender. Principals are also advised to include BHEL's tender Number / Reference in their authorisation issued to the Agent.

If at any stage of the tender, BHEL finds that an Indian Agent has represented more than one foreign principal, all such offers of and all the foreign principals would be disqualified summarily in the tender inquiry.

BHEL will only give an intimation of notice of the disqualification. No correspondence would be entertained by BHEL, on their decision. Such decision of BHEL shall be irrevocable, firm and final and shall be binding on the tenderer.

BHEL, due to business reasons would ban, would have banned Indian agents from dealing with BHEL.

Any foreign principal who engages such a banned agent, or an employee of the banned agency, or any other person connected with the banned agency, at any time during the tender proceedings, would be disqualified from the tender proceedings. The decision of BHEL in this regard shall be final and be binding on the OEM.

Hence in their own interests, prospective tenderers may check with BHEL, the status of their proposed agent vis-à-vis BHEL.

In view of the requirement of BHEL, it is strongly suggested that in their own interest, foreign principals may desist from engaging any Indian agent and deal with BHEL directly and it is stressed that any Main producer proposing to deal with BHEL by engaging and through an Indian Agent does so at their own risk.

BHEL shall in no way be responsible for any consequences that may arise to the foreign principal on account of the antecedents / actions of their Indian Agent.

In the event of the foreign principal engaging an Indian Agent:

a) The Supplier shall furnish an authenticated copy of the Agency Agreement with his agent detailing the precise relationship between them and their mutual interest in the business along with techno-commercial bid.

b) The Supplier shall furnish original authorization letter for the Indian Agent. The letter shall contain name, contact person, complete postal address including phone, fax and e-mail ID. It shall also spell out the type of services to be rendered by Indian Agent.

c) Indian Agent & Agency commission: An Indian Agent can represent only one Foreign Manufacturer against a particular Tender. The FOB price quoted by the foreign bidder shall include the agency commission. However, the agency commission component payable to their Indian Agents shall be shown separately in the Offer, either as a lump-sum or as a percentage of the quoted price. This will be paid by BHEL in Indian Rupees, on satisfactory receipt & acceptance of the materials. For calculation of Rupee equivalent of Agency Commission, exchange rate as prevailing on the date of Purchase Order will be taken and

d) For all discussions, technical clarification and negotiations etc. only the principal would be authorized for interaction with BHEL. The Agent shall not be a party to the discussions / negotiations and would not be normally allowed to participate.

ii) Terms & Conditions of Letter of Credit (L/C) for overseas suppliers (indicated for acceptance).

a) Unconfirmed irrevocable Letter of Credit at Sight only will be opened by BHEL. Confirmation of L/C is not preferred by BHEL. Also L.C will be opened in Lots in line with the staggered delivery.

b) All Bank charges out side India are to the Supplier's account and within India to BHEL's account.

c) In case of L/C extension caused by delays attributable to the Supplier, the L/C extension / commitment charges are to be borne by the Supplier.

iii) Other terms & conditions for letter of credit: - Documents for negotiation

a) Signed Commercial invoice in quadruplicate, for a value not exceeding the draft amount, quoting the import Licence No and certifying goods evidencing shipment of the merchandise are as per Applicant's Purchase Order. The amount of invoice after deducting Indian Agent's commission, if any, should not exceed the Credit amount. (The Indian agent's commission, if any, is payable in India in Indian rupees only.)

b) Certificate of Country of Origin, from the country of manufacture, issued by the Chamber of Commerce.

c) One set of Original and two sets of Non-negotiable copies of 'signed', 'unmarked', 'clean on board' Ocean Bill of Lading, showing Shipper as "Government of India" Account M/s. Bharat Heavy Electrical Ltd, Unit: BHEL, Ranipet as consignee (The opening bank should not be notified as consignee), marked freight payable / prepaid at destination.

d) Packing list in 4 copies in English, indicating Size wise Number of bundles / pieces shipped and weight.

e) Certified copy of the fax / e-mail sent by the beneficiary to the applicant giving the following particulars of shipment, as the insurance is to be arranged by the Applicant in India: (a) Purchase Order Number & date; (b) Bill of Lading Number & date (c) Name of vessel; (d) Port of Loading; (e) Number of bundles / pieces and weight; (f) Invoice Number, date and value (g) Purchase Order item number's despatched. The cable / fax is to be sent within 2 working days of shipment.

f) Beneficiary's certificate showing the relevant airmail / courier reference no. and date that the following clauses have been complied with:

1] Beneficiary to forward by Registered Airmail / Courier one complete set of original documents and one set of non-negotiable documents within 3 working days of obtaining shipping documents to Regional Manager (ROD), Bharat Heavy Electricals Ltd, No. 165, Thambu-Chetty Street, Chennai – 600 001. India. (Phone: +91-44-25341249, 25341240 / Fax - +91-44-25340787; e-mail: raja@rodchn.bhel.co.in)

2] Beneficiary to courier at his cost 3 copies of complete set of non-negotiable documents to the Officer who released the Purchase Order.

3] Declaration by the Supplier certifying that the contents in each case are not less than those entered in the invoices / packing list and that the invoicing for the supplies effected is strictly in accordance with agreed rates as stipulated in the Purchase Order.

4] Declaration to the effect that all other documents as per purchase order has been couriered to the Purchase order releasing authority

5) The carrying steamer should be seaworthy, less than 25 years of age and approved by Lloyds / Classification Societies / General Insurance Corporation of India from time to time and

6) Copy of Dispatch Clearance / Instruction issued by BHEL.

iv) Documents to be sent directly to the Purchaser prior to shipment

a) Manufacturer's Original Internal Inspection / Test certificate in triplicate.

b) Manufacturer's Original Guarantee certificate as per Purchase Order. The material shall be guaranteed for a period of 12 months from the date of acceptance of the materials at BHEL stores or 18 months from the date of dispatch whichever is earlier. The acceptance would be evidenced by the Stores Receipt Voucher (SRV) which will be raised by BHEL.

c) Inspection / Test Certificate issued by BHEL / Inspection agency specified in the Purchase Order. In the event that Inspection prior to dispatch is not carried out by the Engineers of BHEL, the Inspection certificate of the third party so authorized by BHEL and

d) Any other documentation as specified in the Purchase Order.

v) Conditions for transportation:

a) All shipping documents shall show the Purchase Order Number & Date, Import Licence Number & Date, and Letter of Credit Number & Date.

b) Transhipment is to be avoided.

c) Loading on deck is not permitted. The transport document must not contain a provision that goods may be carried on deck.

d) A transport document which is produced or appearing to have been produced by reprographic, automated or computerized systems or as carbon copy will be accepted as an original document provided that it is marked as original and is ink-signed.

e) The transport document must contain all the conditions of carriage on the original document.

f) The transport document must not indicate the place of destination as being different from the port of discharge.

g) The transport document must not contain the indication 'intended' or similar qualification in relation to the vessel or other means of transport or port of loading or port of discharge.

h) The transport document must be issued by the carrier or his agent and not by any freight forwarder.

i) Transport documents bearing reference by stamp or otherwise, to costs additional to the freight charges are not acceptable.

j) The Bills of Exchange must be dated and presentation of documents for negotiation must not be later than 15 days after the date of shipment and in any case not later than the expiry date of the Credit.

l) Indian suppliers shall dispatch the materials on freight prepaid and on door-delivery basis (FOR Destination – Destination: BHEL Stores) and

m) In the event there is a delay by the Supplier in negotiating / submitting the document, any demurrage / wharfage arising out of the same shall be to the account of the Supplier and shall be deducted from the final payment. Also, in such cases, the Supplier shall authorize the Steamer / Shipping agent / transporter to freely release the consignment to BHEL by providing a "Surrender Bill of Lading". Over-seas Suppliers have to give a No-Objection Certificate to BHEL, authorizing BHEL to get the Delivery Order from the Steamer Agent without producing the Original Bill of Lading. This is required to ensure avoidance of incidence of demurrage at Chennai Sea-port that may arise in case of delayed presentation of documents by the Seller.

G) Reverse auction (RA) / on-line bidding on internet:

1."BHEL reserves the right to go for Reverse Auction (RA) (Guidelines as available on www.bhel.com) instead of opening the sealed envelope price bid, submitted by the bidder. This will be decided after techno-commercial evaluation. Bidders shall give their acceptance with their offer for participation in RA. Non-acceptance to participate in RA may result in non-consideration of the bids, in case BHEL decides to go for RA."

2. Those bidders who have given their acceptance to participate in Reverse Auction will have to necessarily submit 'Process compliance form' (to the designated service provider) as well as 'Online sealed bid' in the Reverse Auction. Non-submission of 'Process compliance form' or 'Online sealed bid' by the agreed bidder(s) will be considered as tampering of the tender process and will invite action by BHEL as per extant guidelines for "Suspension of Business Dealings with Suppliers/ Contractors (as available on www.bhel.com)."

3. The philosophy followed for reverse auction shall be English Reverse (No ties).

4. For the proposed reverse auction, technically and commercially acceptable bidders only shall be eligible to participate.

5. BHEL will engage the services of a service provider who will provide all necessary training and assistance before commencement of on line bidding on internet.

6. In case of reverse auction, BHEL will inform the bidders the details of Service Provider to enable them to contact & get trained.

7. Business rules like event date, time, bid decrement, extension etc. also will be communicated through service provider for compliance.

8. Bidders have to fax the Compliance form (annexure IV) before start of Reverse auction. Without this, the bidder will not be eligible to participate in the event.

9. Reverse auction will be conducted on scheduled date & time.

Note: Decision to go for RA or not will be on case to case basis.

10. At the end of Reverse Auction event, the lowest bidder value will be known on auction portal.

11. The lowest bidder has to fax/e-mail the duly signed and filled-in prescribed format for price breakup including that of line items, to the Service provider within two working days of Auction without fail.

12. Bidders are be required to read the "Terms and Conditions" section of the auctions site of Service provider, using the Login IDs and passwords given to them by the service provider before reverse auction event. Bidders should acquaint themselves of the „Business Rules of Reverse Auction", which will be communicated before the Reverse Auction.

13. If the Bidder or any of his representatives are found to be involved in Price manipulation/ cartel formation of any kind, directly or indirectly by communicating with other bidders, action as per extant BHEL guidelines, shall be initiated by BHEL and the results of the RA scrapped/ aborted.

14. The Bidder shall not divulge either his Bids or any other exclusive details of BHEL to any other party.

15. The bidders have to necessarily submit online sealed bid less than or equal to their envelope sealed price bid already submitted to BHEL along with their offer. The envelope sealed price bid of successful L1 bidder in RA, if conducted, would also be opened after the RA and the order will be placed on lower of the two bids (RA closing price & envelope sealed price) thus obtained. It is considered that the bidder having submitted their offer specifically agrees to this condition and undertakes to execute the contract on thus awarded rate/s.

16. If it is found that L1 bidder has quoted higher in the online sealed bid in comparison to the envelope sealed bid for any item(s), the bidder will be issued a warning letter to this effect. However, if the same bidder again defaults on this count in any subsequent tender, it will be considered as fraud and will invite action by BHEL as per extant guidelines for suspension of business dealings with suppliers/ contractors (as available on www.bhel.com)."

17. The calculation sheet e.g. excel sheet (which will help to arrive at 'Total Cost to BHEL') will be communicated to respective bidders of RA by BHEL. In line with the NIT terms, BHEL will provide the calculation sheet (e.g., EXCEL sheet) which will help to arrive at "Total Cost to BHEL" like Packing &

forwarding charges, Taxes and Duties, Freight charges, Insurance, Service Tax for Services and loading factors (for non-compliance to BHEL standard Commercial terms & conditions) for each of the bidder to enable them to fill-in the price and keep it ready for keying in during the Auction.]

18. This calculation sheet will be finalized based on the evaluation criteria specified in the NIT.

19. Suppliers are required to submit their best price bid in a separate sealed cover along with techno-commercial bid. After evaluation of Techno-Commercial Bids:

a) In case BHEL decides not to conduct RA, the envelope sealed price bids of all techno-commercially qualified bidders, along with price impact, if any, would be opened and processed as per extant the internal Purchase/ Works Policy as applicable to BHEL.

b) In case BHEL decides to conduct RA, business rules of RA will be sent to service provider.(See Annexure for Model General Business Rules of RA.)

20. Generally the start price for the RA would be the lowest of

a) Lowest online sealed bid and

b) Internal Estimate of BHEL

Note: Wherever more than one lowest online sealed bids are identical and lower than the estimate, the start price, would be that price arrived by reducing the lowest online sealed bid by maximum of one decrement.

21. Reverse auction process would deemed to have started upon receipt of 'Online Sealed Bids' from the bidders within the prescribed time frame as per Business Rules.

22. After receipt of 'online sealed bids', the start price & bid decrement will be decided by BHEL and the same would be communicated to the service provider, to start the bidding process.

23. Only those bidders who have submitted the 'online sealed bid' within the scheduled time would be eligible to participate further in RA process. However, the H1 bidder (whose quote is highest in online sealed bid) will not be allowed to participate in further RA process provided minimum three bidders are left after removal of H1 bidder. In case of tie for H1 bid (identical online sealed bids), 15 minutes additional time would be provided and all the participating bidders would be informed by mail/ message on bidding screen to enable bidders submit revised online sealed bids so as to break the tie.

24. If the lowest online sealed bid is the starting price, then the lowest bidder in online sealed bid shall be shown as current L1 automatically by the system. System would have the provision to indicate this bid as current L1 for further bidding.

25. If the start price is lower than the lowest online sealed bid, on acceptance of such start price by any bidder, this bid would be indicated as current L1 for further bidding.

26. In case of no further bidding, RA will be deemed to have been successful with current L1 bidder.

27. All bidders who had given online sealed bid would be able to see their rank and L1 price and their ranking L1, L2 etc. would be based on their last quoted price irrespective of quote received in RA or online sealed bid.

28. RA shall be treated as failed in the following scenarios:

a) In cases where the start price is (a) estimate or (b) one decrement (maximum) lower than the lowest of the online sealed bids and no bidder accepts the start price.

b) In cases where the number of online sealed bids are less than four before removal of highest bidder.

c) In cases of tie among H1 bidders, even after extension of submission of online sealed bids once by 15 minutes.

d) Wherever, the evaluation is done for individual line items, RA shall be treated as failed only for those line item(s) for which any of the above a), b) or c) satisfies.

29. In cases of failure of RA, sealed envelope price bids (of item(s) for which RA has failed) of all the techno-commercially qualified bidders would be opened and the tender would be processed accordingly. However, the envelope sealed bid(s) of techno-commercially acceptable bidder(s) who had agreed to participate in the RA and had failed to submit the online sealed bid would not be opened.

30. After declaring L1 upon completion of RA, the envelope sealed price bid of L1 bidder would also be opened for placement of order on lower of the two bids (RA closing price & envelope sealed price) and the offers would be processed as per extant their internal Purchase/ Works policy provisions of BHEL. Action as per NIT terms would be taken if online sealed bid is higher than the envelope sealed bid.

31. Relative position of bidders (for usage in cases of predefined splitting the quantities) would also include bidders who have given 'online sealed bids' but have not given further bids in auction. In case of splitting requirement, H1 bidder may be considered for counter offer if the pre-stated (NIT) numbers of suppliers do not accept the counter offer. However, principle of splitting to N-1 bidder would be maintained.

32. In case H1 bidder happen to be MSE and was removed from further bidding but is within L1 + 15% band, then this bid would be considered and to be processed in line with 'Public Procurement Policy for Micro & Small Enterprises (MSEs) order, 2012'.

33. For providing preference to domestically manufactured Electronic Products, in accordance with Department of Electronics and Information Technology (DeitY) Gazette Notification No. 33(3)/2013-IPHW dated 23.12.2013 and its related notifications issued from time to time, H1 bidder removed from further bidding would be considered for counter-offer to meet domestic bidder requirement for the item(s) under procurement.

34. In case BHEL decides not to go for Reverse Auction for the tender enquiry, the Price bids and price impacts, if any, already submitted and available with BHEL would be opened as per BHEL's standard practice.

35. In case of enquiry through e-Procurement, the sealed electronic price bid (e-bid) would be treated as sealed envelope price bid.

Note: In order to bring more transparency and to address any queries of Bidders on Reverse Auction, an abridged version of BHEL's "Common Guidelines for conducting Reverse Auction (RA)" has been hosted in BHEL's web site www.bhel.com under the links "Supplier Registration Page" and "Tender Notification". All Bidders are requested to visit the link and familiarize themselves with BHEL's RA procedures and guidelines before submission of their bid/s. Submission of Bid shall mean that the Bidder has read and understood BHEL's RA procedures and the bid is in agreement with the same.

H] Force Majeure

If at any time during the currency of this contract, the performance in whole or in part, by either party of any obligations under this contract shall be prevented or delayed by reason, of any war, hostilities, acts of the public enemy, civil commotion, sabotage, fires, explosions, epidemics, quarantine, restrictions or acts of

GOD (hereinafter referred to as events), then provided notice of happening of any such events is given by either party to other within ten days from the date of occurrence thereof, neither party shall reason of such events be entitled to terminate this contract nor shall either party have any such non performance and delay is resumed as soon as practicable after such events has come to an end or ceased to exist. If the performance in whole or part of any obligation under this contract is prevented or delayed by reason or any such event claims for extension of time shall be granted for period considered reasonable by the purchaser subject to prompt notification by the seller to the purchaser of the particulars of the events and supply to the purchaser if required of any supporting evidence. Any waiver of time in respect of partial installment shall not be deemed to be a waiver of time in respect of remaining deliveries.

I] Cancellation of Order:

In the event of non-performance of the contract by the Supplier, BHEL reserves the right to cancel the order with issue of a written notice. BHEL would provide a curing period of 30 days, for the Supplier to rectify the situation. If the Supplier fails to rectify the reason/s that led to the issue of cancellation notice by BHEL, then the cancellation order would be issued automatically by BHEL, without further recourse to the Seller. BHEL will not pay any cancellation charges or any other charges / damages to the Supplier, arising out such cancellation. In the event of the non-performance of the supply contract, by the Supplier, the rights of BHEL include, in addition to cancelling the order, to take alternate purchase action at the cost and risk of the supplier. The additional expenditure to be incurred by BHEL in such alternate purchase would be to the account of the supplier. (Risk Purchase). This remedy would be in addition to the invoking of the CEBG on grounds of failure of the Supplier in executing the Contract and any other legal remedies." BHEL reserves the right to initiate the alternate purchase action at the cost and risk of the erring supplier by issue of a simple notice of intention for the alternate purchase action duly sent by any electronic means and / or by a letter. The cancellation of the order would not be a pre-condition for initiation of the alternate purchase action.

J] Contract Execution Bank Guarantee:

To demonstrate the fidelity of the successful bidder, in executing the Contract, on receipt of the Letter of Intent / Purchase Order, the Supplier shall arrange to provide a contract execution bank guarantee (CEBG). The format of the CEBG is a part of this enquiry. The format may be downloaded and necessary stamping may be obtained from the Banker towards submission of the CEBG. The indigenous suppliers have to provide the CEBG from any one of the Nationalized Banks, listed in the annexure to these terms. Overseas suppliers can submit the CEBG from any of the reputed International / National Bankers. However the CEBG is to be confirmed by any of the Bankers listed by us. In the event of failure by the Supplier to execute the contract either fully or partially, BHEL would encash the entire CEBG. The CEBG shall be valid for the period covering the agreed delivery date of the order with a further claim period of 3 months on the last specified delivery date. In the event of the failure of delivery BHEL would proceed with encashing the CEBG without reference to the Supplier. In the event of BHEL granting extension of the delivery dates, then the CEBG validity shall also be got extended by the Supplier to the extent of the extended delivery times together with the claim period as specified elsewhere. **The CEBG shall be for a value of 2% of the Purchase order.**

Suppliers who are all already registered with BHEL and having a vendor performance rating of A or A+ grade would be exempted from submission of CEBG.

Performance Bank Guarantee

Where ever so required, the Supplier shall arrange to provide a Performance bank guarantee (PBG). The indigenous suppliers have to provide the PBG from any one of the Nationalized Banks, listed in the tender

terms. Overseas suppliers can submit the PBG from any of the reputed International / National Bankers. However the PBG shall be confirmed by any of the Bankers listed by us. The PBG shall guarantee the performance of the equipment / materials / items supplied and shall cover the guarantee period. The PBG shall have a claim period of 3 months in addition to the guarantee period. In the event of failure of the supplies made within the guarantee period, BHEL would encash the entire PBG. **The PBG shall be for a value of 10% of the Purchase order.**

The supplier/s have to get the PBG format (pre-printed) from BHEL and get the same stamped by the Banker. Change of PBG terms either by the supplier's Banker or by the supplier, after servicing of the order is not acceptable. Similarly PBG prepared by the supplier (typed by them) will also not be acceptable to BHEL. The pre-printed form issued by BHEL shall be used for making the PBG.

K] Post-order submission of documents for approval

In the event of the release of Letter of Intent (LoI) / Purchase order/s (PO) against this tender, Bidders have to submit the applicable documents as called for in the tender / LoI / PO/s, such as drawings, data sheets, design calculations etc. These documents for approval have to be submitted within the agreed timelines between BHEL and Bidder. Normally the time period for submission for approval is 15 days from the date of receipt of the LoI / PO by the supplier. The actual time period within which the documents have to be submitted for approval would be specified in the LoI / PO.

Such documents would be subjected to evaluation and approval by BHEL and / or by BHEL's customer / Consultant / Customer's Consultant. Bidders have to give their specific acceptance for this.

After approval of such documents and after getting clearance from BHEL, only the items ordered can be taken up for manufacture.

Any changes required by BHEL / Customer etc. in the documents submitted for approval shall be incorporated by the Bidder and no extra cost would be payable by BHEL for such changes.

In the event that the Bidder does not carry out the required corrections, then the LoI / PO would be liable for cancellation by BHEL and BHEL would resort to alternate purchase action at the risk and cost of the Bidder under the Risk Purchase Condition of the Purchase Order.

Note: After receiving the LoI / PO, supplier shall also forward the acknowledgement / acceptance of the LoI / PO by signing and returning the second copy of the LoI / PO as the token of acceptance.

L] Others

a) In case of any contradiction in the terms and conditions given here and elsewhere in the other documents of the tender, it shall be the responsibility of the tenderer to get it clarified from BHEL. The officer authorized to provide such clarifications is the tender issuing officer.

b) Alterations to the conditions of the Tender can be done only by the authorized officer, at any time before the date and time of tender opening and would be duly communicated through a corrigendum.

c) **Suspension of Business dealings with Suppliers**:

(i) Before submitting offer, prospective bidders are advised to visit our web-site www.bhel.com / supplier registration to familiarize themselves with BHEL's policy and procedures of Suspension of Business Dealings with Suppliers.

Submission of offer shall be deemed to be evidence of the Bidder to have read and understood the above said policy.

ii) **Treatment of Banned / Under-performing Vendors**:

Any supplier who has been put on "Hold" or "Banned" from having business dealings with BHEL, Ranipet or any other unit of BHEL shall not submit their offer against this tender. If any such offers are received they would be summarily rejected and sent back. During the processing of tender, if any unit of BHEL puts a supplier on "Ban" then further processing of the offer will not be taken up and in case an order is placed, BHEL, Ranipet may resort at their discretion to cancel the PO either fully or partially.

If any of the supplier who is supplying similar material to BHEL, Ranipet has a Vendor Performance Rating (VPR) score of 'C' or below, then offer given by such parties will not be considered for ordering in this tender.

Offers of such of those bidders against whom action for suspension of business dealings has been initiated by BHEL, Ranipet or any other Units/Division of BHEL will also not be considered in this tender.

d) **Fraud Prevention Policy**:

The Bidder along with its associate/ collaborators/ sub-contractors/ sub-vendors/ consultants/ service providers shall strictly adhere to BHEL Fraud Prevention Policy displayed on BHEL website http://www.bhel.com and shall immediately bring to the notice of BHEL Management about any fraud or suspected fraud as soon as it comes to their notice.

e) **Applicability of Integrity Pact**:-

IP is a tool to ensure that activities and transactions between the company and its Bidders/ Contractors ate handled in a fair, transparent and corruption free manner. A panel of Independent External monitor (IEMs) have been appointed to oversee implementation of IP in BHEL.

The IP as enclosed with the tender is to be submitted (duly signed by authorized signatory who signs in the offer) along with techno-commercial bid. Only those bidders who have entered into such an IP with BHEL would be competed to participate in the bidding. In other words, entering into pact would be a preliminary qualification.

A detail of IEM for this tender is furnished below:

Name _____
Address _____
Email _____

Please refer section-8 of the IP for Role and Responsibilities of IEMs. In case of any complaint arising out of the tendering process, the matter may be referred to the IEM mentioned in the tender.

No routine correspondence shall be addressed to the IEM (phone / post/ email) regarding the clarifications, time extensions or any other administrative queries, etc. on the tender issued. All such clarification/issues shall be addressed directly to the tender issuing (procurement) department".

Integrity Pact are applicable for all the BHEL enquiries whose estimated value is equal to or more than Rupees 05 Crores.

Copy of Integrity Pact with applicable nominated IEM is attached along with the tender documents for ready reference of Suppliers.

If any Supplier attempts to bribe, or pay commission, gift or any advantage or bring in undue influence either by himself or on his behalf any one including a stranger to the tender, in addition to instituting legal proceedings as per the extant laws prevailing, will disqualify the supplier from this tender and all future tenders of BHEL. Decision of the Purchaser would be final in this matter.

f) The laws governing this transaction shall be the laws in India.

g) Wherever not specified, Inco terms 2010 shall be used to interpret the Commercial terms and conditions and

h) In the event of an order, Supplier shall agree to settlement of disputes or differences, if any, by way of arbitration, in accordance with the "Rule of Arbitration" of the Indian Council of Arbitration.

The language in the tender documents downloaded by the Bidders shall at no point of time be changed, altered or modified in any manner by the Tenderer. If such changes are made by any tenderer, it shall be considered as tampering with BHEL's terms and the offer shall be summarily rejected, whenever it is noticed by BHEL. Such Bidders would be disqualified from the Bidding Process and their offers would be forfeited / Bank Guarantees invoked. They would also not be allowed to participate in future tenders of BHEL.

M. Conditions for rejection of offers:

Following is the list of situations which would lead to rejection of offer/s.

This list is not exhaustive but only indicative.

BHEL reserve the right to reject one or all offers without assigning any reason. The decision of BHEL will be final in this regard.

1. *If the offer fails to meet the technical requirements/specifications of the tendered item/s.*
2. *If the offer does not meet the commercial terms & conditions, such as but not limited to delivery period specified in the tender, Delivery terms, payment terms, Liquidated damages, Risk Purchase, cancellation clause etc., including the load factors specified in the tender.*
3. *If the bidder fails to respond to clarification sought, within a reasonable period. In case of doubts / lack of clarity on the technical and commercial offer of the bidder, BHEL will seek clarifications. Bidders are required to respond completely to such BHEL's queries within 3 working days unless otherwise agreed to in writing by BHEL for period beyond 3 days. If supplier fails to respond within 3 working days or maximum 2 working days on a reminder thereon, the offer of such bidders will be automatically dis-qualified in the tender without further recourse to informing the bidder.*

N. Special Note:

BHEL is a Government of India Undertaking. Its procurement practices are governed by the (Internal) Purchase Policy issued by the management of the company and as per Annexure B applicable at the time of finalising the order against this tender.

-O-

Record of Revisions:

Revision No.	Revision Date	Modification
01	17.08.2016	Payment terms for Foreign suppliers modified wrt loading- Clause k.ii
02	29.08.2016	Treatment of banned vendors – Para 3 added - Clause L.ii
03	14.09.2016	Opening of offers – clause B – sub clause 'b' included and existing clause 'b' renamed as 'c'.
04	14.09.2016	Opening of offers – Note – sub clause (ii) modified
05	12.10.2016	Clause N. Special Note added
06	22.10.2016	Clause G Reverse Auction modified. Annexure on General Business Rules for Reverse Auction appended Role of Principals added under 'Miscellaneous'

ANNEXURE

Model General Business Rules for Reverse Auction

This has reference to tender no **{tender number….date…}**. BHEL shall finalise the Rates for the supply of {item name} through Reverse Auction mode. BHEL has made arrangement with M/s. {Service provider}, who shall be BHEL's authorized service provider for the same. Bidders should
go through the instructions given below and submit acceptance of the same.
The technical & commercial terms are as per (a) BHEL Tender Enq. No. {…} dated {...}, (b) Bidders' technical & commercial bid (in case of two part bid) and (c) subsequent correspondences between BHEL and the bidders, if any.

1. Procedure of Reverse Auctioning
i. Online Sealed Bid: This duration of online sealed bid will be {…} minutes. All bidders to submit their online sealed bids during this period.
ii. Online Reverse Auction: The 'opening price' i.e. start price for RA and 'bid decrement' will be decided by BHEL.
iii. If BHEL decides the lowest online sealed bid as the starting price, then the lowest bidder in online sealed bid shall be shown as current L1 automatically by the system and no acceptance of that price is required. System shall have the provision to indicate this bid as current L1.
iv. Bidders by offering a minimum bid decrement or the multiples thereof can displace a standing lowest bid and become "L1" and this continues as an iterative process.
v. After the completion of the online reverse auction, the Closing Price (CP) shall be available for further processing.

2. Schedule for Reverse Auction: The Reverse Auction is tentatively scheduled on {date}:
and the duration of online sealed bid will be {…} minutes. All bidders to submit their online sealed bids during this period.

- Online Sealed Bid:-
• {Start Time:
• Close Time: }

- Online Reverse Auction:-
• {Start Time:
• Close Time:}

3. Auction extension time:

If a bidder places a bid in the last {…} minutes of closing of the Reverse Auction and if that bid gets accepted, then the auction's duration shall get extended automatically for another {…} minutes, for the entire auction (i.e. for all the items in the auction), from the time that bid comes in. Please note that the auto-extension will take place only if a bid comes in those last {…} minutes and if that bid gets accepted as the lowest bid. If the bid does not get accepted as the lowest bid, the auto-extension will not take place even if that bid might have come in the last {…} minutes. In case, there is no bid in the last {…} minutes of closing of Reverse Auction, the auction shall get closed automatically without any extension. However, bidders are advised not to wait till the last
minute or last few seconds to enter their bid during the auto-extension period to avoid complications related with internet connectivity, network problems, system crash down,
power failure, etc.
The above process will continue till completion of Reverse Auction.
Complaints/ Grievances, if any, regarding denial of service or any related issue should be
given in writing thru e-mail/ fax to M/s. {Service provider} with a copy to BHEL within 15
minutes prior to initial closing time of Online Reverse Auction.

4. Bid price: The Bidder has to quote the {……} Price inclusive of Packing & Forwarding charges, all the routine & type tests as per tender scope, ED + cess, CST against C-form, Freight (bidder to

provide original Freight paid receipt), insurance charges, etc. including loading (if indicated by BHEL due to deviations in technical/ commercial terms) for the Items specified. Details are as shown in Excel Sheet for calculation of total cost to BHEL(To be specified by Unit as per NIT conditions).

5. Bidding currency and unit of measurement:
Bidding will be conducted in *Indian Rupees per Unit* of the material as per the specifications {...}
In case of foreign currency bids, exchange rate (TT selling rate of State Bank of India) as on scheduled date of tender opening (Part-I bid) shall be considered for conversion in Indian Rupees. If the relevant day happens to be a Bank holiday, then the forex rate as on the previous bank (SBI) working day shall be taken.

6. Validity of bids: Price shall be valid for {… *days*} from the date of reverse auction. These shall not be subjected to any change whatsoever.

7. Lowest bid of a bidder: In case the bidder submits more than one bid, the lowest bid at the end of Online Reverse Auction will be considered as the bidder's final offer to execute the work.

8. Bidders shall be assigned a **Unique User Name** & **Password** by M/s. *{Service provider}*.Bidders are advised to change the Password and edit the information in the Registration Page after the receipt of initial Password from M/s. *{Service provider}* to ensure confidentiality. All bids made from the Login ID given to the bidders will be deemed to have been made by the bidders/ bidders 'company.

9. Post auction procedure: BHEL will proceed with the Lowest Bid in the Reverse Auction for further processing.

10. Any commercial/ technical loading shall be intimated to bidders prior to RA. The excel sheet provided in this regard shall cover all these aspects. Commercial/ technical loading if any, shall be added by the respective bidder in its price during online sealed bid & Online Reverse Auction. Modalities of loading & de-loading shall be separately intimated to the bidders. The responsibility for correctness of total cost to BHEL shall lie with the bidders.

11. Computerized reverse auction shall be conducted by BHEL (through M/s. {Service Provider}), on pre-specified date, while the bidders shall be quoting from their own offices/ place of their choice. Internet connectivity shall have to be ensured by bidders themselves.
During the RA process if a bidder is not able to bid and requests for extension of time by FAX/ email/ phone then time extension of additional 15 minutes will be given by the service provider provided such requests come before 5 minutes of auction closing time. However, only one such request per bidder can be entertained. Despite this extension if bidder fails to upload his prices due to extreme case of failure of Internet connectivity, (due to any reason whatsoever may be) it is the bidders'
responsibility/ decision to send fax communication immediately to M/s. {Service provider}, furnishing the price the bidder wants to bid online with a request to the service provider to upload the faxed price online so that the service provider will up load that price online on behalf of the Bidder. It shall be noted clearly that the concerned bidder communicating this price to service provider has to solely ensure that the fax message is received by the service provider in a readable/ legible form and also the Bidder should simultaneously check up with service provider about the clear receipt of the price faxed. It shall also be clearly understood that the bidder shall be at liberty to send such fax communications of prices to be uploaded by the service provider only within the closure of Bid time and under no circumstance it shall be allowed beyond the closure of Bid time /reverse auction. It shall also be noted that the service provider should be given a reasonable required time by the bidders, to upload such prices online and if such required time is not available at the disposal of the Service provider at the time of receipt of the fax message from the bidders,
the service provider will not be uploading the prices and either BHEL or the service provider are not responsible for this unforeseen circumstances. In order to ward-off such contingent situation bidders are requested to make all the necessary arrangements/ alternatives whatever required so that they are able to circumvent such situation and still be able to participate in the reverse auction successfully. Failure of power or loss of connectivity at the premises of bidders during the Reverse auction cannot be the cause for not participating in the reverse auction. On account of this, the time for the auction cannot be extended and neither BHEL nor M/s. *{Service provider}* is responsible for such eventualities.

12. Proxy bids: Proxy bidding feature is a pro-bidder feature to safeguard the bidder's interest of any internet failure or to avoid last minute rush. The proxy feature allows bidders to place an automated bid in the system directly in an auction and bid without having to enter a new amount each time a competing bidder submits a new offer. The bid amount that a bidder enters is the minimum that the bidder is willing to offer. Here the software bids on behalf of the bidder. This obviates the need for the bidder participating in the bidding process until the proxy bid amount is decrementally reached by other bidders. When proxy bid amount is reached, the bidder (who has submitted the proxy bid) has an option to start participating in the bidding process.
The proxy amount is the minimum amount that the bidder is willing to offer. During the course of bidding, the bidder cannot delete or change the amount of a proxy bid. Bids are submitted in decrements (decreasing bid amounts). The application automates proxy bidding by processing proxy bids automatically, according to the decrement that the auction originator originally established when creating the auction, submitting offers to the next bid decrement each time a competing bidder bids, regardless of the fact whether the competing bids are submitted as proxy or standard bids. However, it may please be noted that if a manual bid and proxy bid are submitted at the same instant manual bid will be recognized as the L1 at that instant. In case of more than one proxy bid, the system shall bid till it crosses the threshold value of 'each lowest proxy bid' and thereafter allow the competition to decide the final L1 price. Proxy bids are fed into the system directly by the respective bidders. As such this information is privy only to the respective bidder(s).

13. Bidders are advised to get fully trained and clear all their doubts such as refreshing of screen, quantity being auctioned, tender value being auctioned etc. from M/s. *{Service provider}*.

14. M/s. *{Service provider}*, shall arrange to demonstrate/ train the bidder or bidder's nominated person(s), without any cost to bidders. M/s. *{Service provider}*, shall also explain the bidders, all the business rules related to the Reverse Auction. Bidders are required to submit their acceptance to the terms/ conditions/modalities before participating in the Reverse Auction in the process compliance form as enclosed. Without this, the bidder will not be eligible to participate in the event.

15. Successful bidder shall be required to submit the final prices (L1) in prescribed format (Annexure-VI) for price breakup including that of line items, if required, quoted during the Online Reverse Auction, duly signed and stamped as token of acceptance without any new condition (other than those already agreed to before start of auction), after the completion of auction to M/s. *{Service provider}* besides BHEL within two working days of Auction without fail.

16. Any variation between the final bid value and that in the confirmatory signed price breakup Document will be considered as tampering the tender process and will invite action by BHEL as per extant guidelines for suspension of business dealings (as available on www.bhel.com).
17. Bidders' bid will be taken as an offer to execute the work/ supplies of the item as per enquiry No. {…} dt. {…}. Bids once made by the bidder, cannot be cancelled/ withdrawn and bidder shall be bound to execute the work as mentioned above at bidder's final bid price. Should bidder back out and not execute the contract as per the rates quoted, BHEL shall take action as per extant guidelines for suspension of business dealings (as available on www.bhel.com).

18. Bidders shall be able to view the following on their screen along with the necessary fields during Online Reverse Auction:
a. Leading (Running Lowest) Bid in the Auction (only total price of package).
b. Bid Placed by the bidder.
c. Start Price.
d. Decrement value.
e. Rank of their own bid during bidding as well as at the close of auction

19. BHEL's decision on award of contract shall be final and binding on all the Bidders.

20. BHEL reserves the right to extend, reschedule or cancel the Reverse Auction process at any time, before ordering, without assigning any reason, with intimation to bidders.

21. BHEL shall not have any liability to bidders for any interruption or delay in access to the site irrespective of the cause. In such cases, the decision of BHEL shall be binding on the
bidders.

22. Other terms and conditions shall be as per bidder's techno-commercial offers and other correspondences, if any, till date.

23. If there is any clash between this business document and the FAQ available, if any, in the website of M/s. *{Service provider}*, the terms & conditions given in this business document will supersede the information contained in the FAQs. Any changes made by BHEL/ service provider (due to unforeseen contingencies) after the first posting shall be deemed to have been accepted if the bidder continues to access the portal after that time..

24. Bidder shall not divulge either his Bids or any other exclusive details of BHEL to any other party. If the Bidder or any of his representatives are found to be involved in Price manipulation/ cartel formation of any kind, directly or indirectly by communicating with other bidders, action as per extant BHEL guidelines for suspension of business dealings (as available on www.bhel.com), shall be initiated by BHEL.

RA price confirmation and breakup
(To be submitted by L1 bidder after completion of RA)

To
- M/s. Service provider
- Postal address

CC: M/s BHEL

BOILER AUXILIARIES PLANT
INDIRA GANDHI INDUSTRIAL COMPLEX
RANIPET – 632406
TAMILNADU
INDIA.

Sub: Final price quoted during Reverse Auction and price breakup

Dear Sir,

We confirm that we have quoted.

Rs.{ _____in value & in words_____ } for item(s) covered under tender enquiry No. {...} dt.{…}

Total price of the items covered under above cited enquiries is inclusive of {Packing & forwarding, E.D. , C.S.T. , freight and insurance charges up to {……} District,{……..} State and Type Test Charges etc., (exclusive of service tax), other as per NIT}

as our final landed prices as quoted during the Reverse Auction conducted today {date} which will be valid for a period of { ___ in nos. & in words ___ } days.

The price break-up including that of line items is as given below.

	========
Total	- Rs.in value & in words
	========

Thanking you and looking forward to the valuable order from BHEL.

Yours sincerely,
For _____
Name:
Company:
Date:
Seal:

बी एच ई एल BHEL Ranipet	**Standard Quality Plan for Thermostat for ESP Application for NTPC and NON NTPC projects.**	
REF. NO.	REVISION NO.	EFFECTIVE DATE
QP:E :842	00	26 03 2016

TITLE : **Standard Quality Plan for Thermostat for ESP Application.**

		SIGNATURE
PREPARED BY :	CH ANIL SINGH / ASST.ENGINEER	
REVIEWED :	S SHEELA / SR.ENGINEER	
APPROVED BY :	C SRINIVASAN / DGM	26/03/2016

ISSUED & CONTROLLED BY : *QUALITY ASSURANCE*
BHEL, RANIPET - 632 406.

DOCUMENT STATUS ☐ INFORMATION COPY

☐ CONTROL COPY

✓ It is a control copy only if the mark against the control copy is in other than black colour. Otherwise it will be an uncontrolled copy. Check for current revision.

ISSUED TO:	CONTROL COPY NO :

RECORD OF REVISION

REV. NO	EFFECTIVE DATE	REMARKS
00	26 03 2016	Original Issue.

Ranipet	BHARAT HEAVY ELECTRICALS LTD BOILER AUXILIARIES PLANT, RANIPET – 632 406. QUALITY ASSURANCE	STANDARD QUALITY PLAN FOR THERMOSTAT FOR ESP APPLICATION.	PROJECT: STANDARD QULAITY PLAN FOR NTPC AND NON NTPC PROJECTS	QP Ref : QP:E:842 REV. NO: 00 DATE: 26 03 2016 Page 1 of 1

Sl. No.	COMPONENT / ASSEMBLY / OPERATION/TESTS		CHARACTE -RISTICS	CLASS	TYPE OF CHECK	QUANTUM OF CHECK		REFERENCE DOCUMENT	ACCEPTANCE STANDARD	FORMAT OF REC		AGENCY			REMARKS
						M	B/ C					M	B	C	
1	2		3	4	5	6		7	8	9	D*	**	10		11
1.0	Review of Raw Material TC for		Chemical Composition	Major	Chemica l	Sample	Sample	APRD DWG/PO Spec.	APRD DWG/PO Spec.	TC		P	V	V	
2.0	Visual Inspection	a)	Make	Major	Visual	100%	10%	APRD DWG/PO Spec.	APRD DWG/PO Spec.	-		P	V	V	
		b)	Sl.no	Major	Visual	100%	10%	APRD DWG/PO Spec.	APRD DWG/PO Spec.	-		P	V	V	
		c)	Verification of cable glands	Major	Visual	100%	10%	APRD DWG/PO Spec.	APRD DWG/PO Spec.	-		P	V	V	
3.0	Dimensional check Including Thermo well	a)	Dimensional	Major	Visual	100%	10%	APRD DWG/PO Spec.	APRD DWG/PO Spec.	IR		P	W	V	
4.0	Functional Check	a)	Hydraulic Test	Major	Measure ment	100%	10%	APRD DWG/Drawing.	APRD DWG/Drawing.	IR		P	W	V	
		b)	Over temperature	Major	Measure ment	100%	10%	APRD DWG/Drawing.	APRD DWG/Drawing.	IR		P	W	V	
		c)	Low temperature test	Major	Measure ment	100%	10%	APRD DWG/Drawing.	APRD DWG/Drawing.	IR		P	W	V	
		d)	Calibration & Accuracy Test	Major	Measure ment	100%	10%	APRD DWG/Drawing.	APRD DWG/Drawing.	IR		P	W	V	
		a)	IR test before and after HV test	Major	Visual	100%	10%	PO Spec.	IR>10 0Mega Ohms	IR		P	W	V	
		b)	HV test	Major	Elect.	100%	10%	PO Spec.	HV 1.5 KV per 1 min	IR		P	W	V	
5.0	Type test reports	a)	Over load test	Major	Mech	Sample	Sample	PO Spec.	PO Spec.	TC/TR		P	V	V	5 years valid test report from date of enquiry to be submitted for review
		b)	Moisture resistance test	Major	Elect.	Sample	Sample	PO Spec.	PO Spec.	TC/TR		P	V	V	
		c)	Resistance to Rusting	Major	Elect.	Sample	Sample	PO Spec.	PO Spec.	TC/TR		P	V	V	
		d)	Vibration test	Major	Mech	Sample	Sample	PO Spec.	PO Spec.	TC/TR		P	V	V	
		e)	Endurance test Thermal & mechanical	Major	Mech	Sample	Sample	PO Spec.	PO Spec.	TC/TR		P	V	V	
		f)	Degree of Protection(IP 55)	Major	Measure	Sample	Sample	PO Spec.	PO Spec.	TC/TR		P	V	V	
6.0	Painting & Packaging		Visual	Major	Visual	100%	100%	APRD DWG/PO Spec.	APRD DWG/PO Spec.	IR		P	W	V	

LEGEND: * RECORDS IDENTIFIED WITH "TICK" SHALL BE ESSENTIALLY INCLUDED BY SUPPLIER IN QA DOCUMENTATION.
** M: MANUFACTURER /SUB-SUPPLIER, C: SUPPLIER/NAMINATED INSPECTION AGENCY, B=BHEL /BHEL AIA, P: PERFORM, W: WITNESS AND V: VERIFICATION

APRD DWG – APPROVED DATA SHEET, SPEC. – NTPC SPECIFICATION, TC - TEST CERTIFICATE, COC – CERTIFICATE OF COMPLAINCE
CC – CALIBRATION CERTIFICATE, PO Spec. – Purchase Order Specification. IR = Internal Inspection Reportss

DOCUMENT TITTLE : TECHNICAL SPECIFICATION FOR BOUGHT OUT ITEMS FOR ELECTROSTATIC PRECIPITATOR

ITEM : THERMOSTAT

PROJECT : BHEL STANDARD

	NAME	DESIGNATION	SIGNATURE	DATE
PREPARED BY	G.M.KUMAR	EAE	G.M.Kumar	06.08.2016
REVIEWED BY	M.JAYAMURUGANAND	SDGM		06.08.2016
APPROVED BY	K.P.MANIMALA	AGM		06.08.2016

ISSUED BY:
EDC/ECI

REVISION NO:03	CL.NO. 4.5, 4.7, 4.13, 4.15, 4.16, 4.18 ,4.33,8.0, 9.2 ALTERED & 8.4 DELETED	06.08.2016
REVISION NO:02	CL.NO. 4.13, 4.15, 4.16 & 4.18 ALTERED	20.05.2014
REVISION NO:01	GENERALLY REVISED	20.08.2008
REVISION NO:00	INITIAL RELEASE	29.01.2004

1.0 SCOPE:

The scope shall include design, development, manufacture, inspection, testing, packing and supply of THERMOSTATS as per Enquiry / PURCHASE Order.

2.0 APPLICABLE STANDARDS	:	IS4165, IS13947
3.0 APPLICATION	:	To control the ESP Bottom Hopper wall temperature and to control the air temperature inside the Insulator Housing.

4.0 TECHNICAL PARTICULARS:

4.1 INSTALLATION LOCATION	:	(i) Outdoor, highly polluted with abrasive dust. (ii) The Thermostat will be subjected to constant vibration during operation.
4.2 SENSING	:	Liquid Expansion
4.3 SENSING BULB MATERIAL	:	Copper
4.4 CAPILLARY MATERIAL	:	Copper
4.5 CAPILLARY LENGTH	:	280mm /400mm (As per enquiry / P.O) 03
4.6 THERMOWELL MATERIAL	:	STAINLESS STEEL – SS 316L
4.7 THERMOWELL LENGTH	:	To suit 280mm/400mm thermostat capillary (As per enquiry / P.O). 03
4.8 MOUNTING	:	Direct mounting on hopper wall & Insulator housing of ESP.
4.9 PROCESS CONNECTION	:	½" BSP (Male)
4.10 OPERATING RANGE	:	90 deg. C-160 deg. C
4.11 MAXIMUM PROCESS TEMPERATURE	:	200 Deg.C
4.12 MAX. AMBIENT TEMPERATURE	:	6 deg.C to 60 deg.C
4.13 MAXIMUM AMBIENT TEMPERATURECOMPENSATION	:	To be provided
4.14 INDICATING DIAL	:	To be provided internally (over the operating range)

4.15 HOUSING	:	DIE CAST ALUMINIUM/ABS Plastic with paint shade 631 as per IS 5. 03
4.16 HOUSING COVER	:	DIE CAST ALUMINIUM/ABS Plastic with paint shade 631 as per IS 5. 03
4.17 LINK CHAIN FOR HOUSING COVER	:	To be provided
4.18 INGRESS PROTECTION	:	IP55 as per IS13947 03
4.19 MICRO SWITCH	:	SPDT – 1No.
4.20 MICRO SWITCH RATING	:	230V, 5A, AC, INDUCTIVE
4.21 CONTACT ACTION	:	On increasing temperature
4.22 CONTACT RESISTANCE	:	BELOW 50 mΩ
4.23 SET POINT	:	Adjustable throughout entire operating range.
4.24 RESET	:	Auto Reset
4.25 TEMPERATURE SETTING	:	(i) Internal and (ii)Field setting
4.26 SWITCHING DIFFERENTIAL	:	7 deg.C (max.)
4.27 SCALE ACCURACY	:	Plus or Minus 2% FSR
4.28 REPEAT ACCURACY	:	Plus or Minus 1% FSR
4.29 INTERNAL WIRING	:	With 1.5 sq.mm multi stranded copper conductor with high temperature TEFLON coating
4.30 ELECTRICAL CONNECTION (EXTERNAL)	:	3C-2.5sqmm stranded Copper, Armoured PVC Cable.
4.31 CABLE GLAND TYPE	:	Double compression, Nickel Plated Brass glands with grommet
4.32 CABLE GLAND MAKE	:	COMMET/BRACCO/SUNIL&CO
4.33 CABLE GLAND SIZE	:	CBW 01 or BHEL approved Equivalent 03
4.34 CABLE GLAND QUANTITY	:	1 No.

4.35 CABLE LUG TYPE	:	Annealed Tinned Copper, Insulated Crimping type.
4.36 CABLE LUG MAKE	:	DOWELLS
4.37 CABLE LUG SIZE	:	CPI 19
4.38 CABLE LUG QUANTITY	:	3 Nos.
4.39 EXTERNAL EARTHING PROVISION	:	Shall be provided (min. M6).
4.40 TERMINAL BLOCK	:	(i) 650 V grade (ii)Shall be suitable for terminating 3C– 2.5sq.mm copper stranded cable.
4.41 INSULATION RESISTANCE	:	> 100 MΩ at 500 V DC for 1 minute
4.42 HIGH VOLTAGE TEST	:	1500 V AC , 50 Hz for 1 minute

5.0 DOCUMENTS TO BE SUBMITTED ALONG WITH OFFER:

5.1 Compliance to enquiry technical specification.

5.2 Technical particulars of the offered model.

6.0 DOCUMENTS TO BE SUBMITTED ON PLACEMENT OF ORDER FOR APPROVAL:

6.1 Six copies of Technical data sheet for the offered model covering all aspects of Enquiry / Order technical specification shall be submitted within 10 days from the date of Purchase order.

6.2 Six copies of GA Drawing indicating various dimensions and parts of THERMOSTAT shall be submitted within 10 days from the date of Purchase order.

6.3 Draft manual covering Dos & Don'ts, packing, storage, mounting, calibration, commissioning, trouble shooting, operation principle, technical datasheet, GA drawing, typical routine test certificate etc. of the THERMOSTAT, shall be submitted to BHEL for approval.

6.4 Forty-five copies of printed copy of the manual prepared based on BHEL/RANIPET approved draft manual, shall be submitted to BHEL along with the THERMOSTAT supply.

6.5 In addition, one set of manual shall be supplied in CD.

7.0 PROTOTYPE APPROVAL:

Before starting bulk manufacturing, the vendor shall submit the prototype sample of the THERMOSTAT to BHEL for approval.

8.0 INSPECTION & TESTING:

8.1 TYPE TESTS:

The vendor shall conduct the following TYPE TESTS in the presence of BHEL/BHEL Authorized Inspection Agency for each Type/Design. However, if the vendor has already conducted all the TYPE TESTS on identical design/type which is not older than 5 years from Purchase Order date, the same shall be submitted to BHEL/ BHEL Authorized Inspection Agency for review and acceptance. Other wise vendor has to conduct type test in presence of BHEL/BHEL Authorized Inspection Agency without any cost implication to BHEL.

8.2 LIST OF TYPE TESTS:

a) Moisture resistance test
b) Resistance to Rusting
c) Overload test
d) Degree of protection
e) Vibration test
f) Endurance test-Thermal & Mechanical

8.3 ROUTINE TESTS:

For all THERMOSTATS, all routine tests/Functional checks as per BHEL Standard quality plan ref.QP:E:842 (Latest revision) shall be carried out.

8.4 INSPECTION:

The THERMOSTAT will be inspected by BHEL/BHEL Authorized Inspection Agency based on the following documents at vendor's works.

a) BHEL Purchase Order
b) BHEL Technical Specification
c) BHEL Standard Quality Plan
d) Vendor data sheets & drawings approved by BHEL.

9.0 PACKING:

9.1 Each THERMOSTAT shall be packed in separate packing consisting of Thermocol or bubbled polythene sheet and hard board. The packing shall be done such that, the THERMOSTAT will not get damaged during transport, storage and handling. The packing material shall withstand long storage kept inside covered area. 03

10.0 DESPATCH:

The Thermostats shall be dispatched from vendor's works only after obtaining written clearance from BHEL.