ಭಾರತ್ ಹೆವಿ ಎಲೆಕ್ಟ್ರಿಕಲ್ಸ್ ಲಿಮಿಟೆಡ್
भारत हेवी इलेक्ट्रिकल्स लिमिटेड
PHONE : 080 - 26998377
Fax : 080 -26989217
E-MAIL pragadeeshtg@bhel.in

Bharat Heavy Electricals Limited
(A Government of India Undertaking)
ELECTRONICS DIVISION
P.O. Box No. 2606, Mysuru Road, Bengaluru - 560 026
An ISO 9001, ISO 14001, OHSAS 18001 & ISO/IEC 27001:2005 Company

E-Tender

The Quotations are invited under two part bid system for Design, Supply, Installation and Commissioning of 220 kV switchyard bay and Interconnection between solar plant and Switchyard for 20MW (AC) Solar Photovoltaic Grid-connected Power plant at NTPC Gandhar, Gujarat

RFQ NO and date	TGPBOS0054 dated 28.09.2020 (e-tender)
RFQ due date & time	08.10.2020 up to 13.00 hrs (IST)
Date, Time & Venue of Part-I Bid Opening	08.10.2020 after 13.30 hrs (IST)
Date, Time & Venue of Price Bid opening	Will be intimated later for technically accepted vendors
Address for Commercial Communication & Contact Person in BHEL (MM dept)	Mr. T.G.Pragadeesh (9742576787) Manager Telephone number: 080 26998377, Email: pragadeeshtg@bhel.in Mr. Vivek Kumar Yadav (9449039232), Deputy General Manager Telephone number: 080 26998237 Email: vivekyadav@bhel.in SC&PV Materials Management, BHEL Electronics Division, PB NO 2606, Mysuru road, Bengaluru-560 026. INDIA
Address for Technical Communication & Contact Person in BHEL with CC to MM dept	Mr. Sheetal Prasad (9739913232) Deputy Manager Telephone number: 080 26989551, Email: sheetalprasad@bhel.in Mrs. Prachi Rao (9980160918) Additional General Manager Telephone number: 080 26998276, Email: prachi.rao@bhel.in SC&PV ENGINEERING Department, BHEL Electronics Division, PB NO 2606, Mysuru road, Bengaluru-560 026. INDIA

ಭಾರತ್ ಹೆವಿ ಎಲೆಕ್ಟ್ರಿಕಲ್ಸ್ ಲಿಮಿಟೆಡ್
भारत हेवी इलेक्ट्रिकल्स लिमिटेड
PHONE : 080 - 26998377
Fax : 080 -26989217
E-MAIL pragadeeshtg@bhel.in

Bharat Heavy Electricals Limited
(A Government of India Undertaking)
ELECTRONICS DIVISION
P.O. Box No. 2606, Mysuru Road, Bengaluru - 560 026
An ISO 9001, ISO 14001, OHSAS 18001 & ISO/IEC 27001:2005 Company

Name and address of the Independent External Monitor for this tender	1. Shri Arun Chandra Verma, IPS (Retd.) Flat No. C -1204, C Tower, Amrapali,Platinum Complex,Sector 119, Noida (U.P.) acverma1@gmail.com 2. Shri Virendra Bahadur Singh, IPS (Retd.) H. No. B-5/64, Vineet Khand, Gomti Nagar,Lucknow – 226010 vbsinghips@gmail.com

Any Deviations from or additions to the "General Conditions of Contract" or "Special Conditions of Contract" require BHEL's express written consent. The General Terms of Business or Sale of the Bidder shall not apply to this tender.

Pre-Qualification Criteria (PQC)

1) The bidder should have designed, constructed/erected, tested and commissioned atleast one (1) Air insulated Substation/ Switchyard of 220 kV or above voltage class having atleast One (1) bay which should have been in successful operation for minimum two(2) years prior to the date of technocommercial bid opening. Evidence in the form of Purchase Orders and satisfactory operation certificate from end customer shall be submitted along with the technical offer.
   NOTE: For the purpose of qualifying requirement for clause no. 1, one no. of bay shall be considered as a bay comprising of atleast one circuit breaker, two disconnectors and single phase current transformers.

1	Whether bidder/Subcontractor have designed, constructed/erected, tested and commissioned atleast one (1) Air insulated Substation/ Switchyard of 220 kV or above voltage class having atleast One (1) bay which should have been in successful operation for minimum two(2) years prior to the date of techno-commercial bid opening.	(Yes / No)
2	Name of the sub-station and its location	
3	Client name and its address, Fax and Tel no.	
4	Name and designation of the responsible person in client's organisation	
5	Contract No. & Date	
6	Details of substation/switchyard a. Whether Air insulated or not b. Voltage rating for Switchyard c. No. of bays in Switchyard	
7	Scope of work executed for aforesaid substation/switchyard included the following : a. Designed b. Constructed/Erected c. Tested d. Commissioned	 (Yes / No) (Yes / No) (Yes / No) (Yes / No)
8	Date of commissioning of Substation/Switchyard	
9	Certificate(s) from the client(s) are enclosed along with the bid	

REQUEST FOR QUOTATION

MMI:PU:RF:003

BHARAT HEAVY ELECTRICALS LIMITED
Electronics Division
PB No. 2606, Mysore Road Bangalore - 560026
INDIA

RFQ NUMBER:
TGPBOS0054

RFQ DATE :
28.SEP.2020

Due Date
08.OCT.2020
Time: 13:00 HRS

VENUE :EPS
TENDER

PURCHASE FILE COPY

(for all correspondence)
Purchase Executive : TG Pragadeesh
Phone : 080 26998377
Fax :
E-mail: pragadeeshtg@bhel.in

Sl No.	Description	Qty	Unit	Delivery qty	Delivery Date
1	Interconnection-Solarplant to NTPC SY/CR	1	AU	1	20.FEB.2021
2	I&C of items related to 220kv switchyard Interconnection from Solar plant to Power Transformer/Control room for 220 KV Switchyard Interconnection from Solar plant to Power T	1	AU	1	20.FEB.2021
3	PS0679083162 Supply of items for 220kv switchyard and items for 33KV Interconnection from solar plant to 220KV Switchyard Test Certificate	1	ST	1	20.JAN.2021
4	PS0679083189 supply of spare items Test Certificate	1	ST	1	20.JAN.2021

Total Number of Items - 4

For and On behalf of BHEL.

Annexure-1

INTEGRITY PACT

Between

Bharat Heavy Electricals Ltd. (BHEL), a company registered under the Companies Act 1956 and having its registered office at "BHEL House", Siri Fort, New Delhi - 110049 (India) hereinafter referred to as "The Principal", which expression unless repugnant to the context or meaning hereof shall include its successors or assigns of the ONE PART

and

_____, (description of the party along with address), hereinafter referred to as "The Bidder/ Contractor" which expression unless repugnant to the context or meaning hereof shall include its successors or assigns of the OTHER PART

Preamble

The Principal intends to award, under laid-down organizational procedures, contract/s for _____ _____ _____. The Principal values full compliance with all relevant laws of the land, rules and regulations, and the principles of economic use of resources, and of fairness and transparency in its relations with its Bidder(s)/ Contractor(s).

In order to achieve these goals, the Principal will appoint Independent External Monitor(s), who will monitor the tender process and the execution of the contract for compliance with the principles mentioned above.

Section 1- Commitments of the Principal

1.1 The Principal commits itself to take all measures necessary to prevent corruption and to observe the following principles:-

1.1.1 No employee of the Principal, personally or through family members, will in connection with the tender for, or the execution of a contract, demand, take a promise for or accept, for self or third person, any material or immaterial benefit which the person is not legally entitled to.

1.1.2 The Principal will, during the tender process treat all Bidder(s) with equity and reason. The Principal will in particular, before and during the tender process, provide to all Bidder(s) the same information and will not provide to any Bidder(s) confidential/ additional information through which the Bidder(s) could obtain an advantage in relation to the tender process or the contract execution.

1.1.3 The Principal will exclude from the process all known prejudiced persons.

1.2 If the Principal obtains information on the conduct of any of its employees which is a penal offence under the Indian Penal Code 1860 and Prevention of Corruption Act 1988 or any other statutory penal enactment, or if there be a substantive suspicion in this regard, the Principal will inform its Vigilance Office and in addition can initiate disciplinary actions:

Section 2 - Commitments of the Bidder(s)/ Contractor(s)

2.1 The Bidder(s)/ Contractor(s) commit himself to take all measures necessary to prevent corruption. He commits himself to observe the following principles during his participation in the tender process and during the contract execution.

2.1.1 The Bidder(s)/ Contractor(s) will not, directly or through any other person or firm, offer, promise or give to the Principal or to any of the Principal's employees involved in the tender process or the execution of the contract or to any third person any material, immaterial or any other benefit which he/ she is not legally entitled to, in order to obtain in exchange any advantage of any kind whatsoever during the tender process or during the execution of the contract.

2.1.2 The Bidder(s)/ Contractor(s) will not enter with other Bidder(s) into any illegal or undisclosed agreement or understanding, whether formal or informal. This applies in particular to prices, specifications, certifications, subsidiary contracts, submission or non-submission of bids or any other actions to restrict competitiveness or to introduce cartelization in the bidding process.

2.1.3 The Bidder(s)/ Contractor(s) will not commit any penal offence under the relevant Indian Penal Code (IPC) and Prevention of Corruption Act; further the Bidder(s)/ Contractor(s) will not use improperly, for purposes of competition or personal gain, or pass on to others, any information or document provided by the Principal as part of the business relationship, regarding plans, technical proposals and business details, including information contained or transmitted electronically.

2.1.4 Foreign Bidder(s)/ Contractor(s) shall disclose the name and address of agents and representatives in India and Indian Bidder(s)/ Contractor(s) to disclose their foreign principals or associates. The Bidder(s)/ Contractor(s) will, when presenting his bid, disclose any and all payments he has made, and is committed to or intends to make to agents, brokers or any other intermediaries in connection with the award of the contract.

2.2 The Bidder(s)/ Contractor(s) will not instigate third persons to commit offences outlined above or be an accessory to such offences.

2.3 The Bidder(s)/ Contractor(s) shall not approach the Courts while representing the matters to IEMs and will await their decision in the matter.

Section 3 - Disqualification from tender process and exclusion from future contracts

If the Bidder(s)/ Contractor(s), before award or during execution has committed a transgression through a violation of Section 2 above, or acts in any other manner such as to put his reliability or credibility in question, the Principal is entitled to disqualify the Bidder(s)/ Contractor(s) from the tender process or take action as per the separate "Guidelines on Banning of Business dealings with Suppliers/ Contractors", framed by the Principal.

Section 4 - Compensation for Damages

4.1 If the Principal has disqualified the Bidder from the tender process prior to the award according to Section 3, the Principal is entitled to demand and recover the damages equivalent Earnest Money Deposit/ Bid Security.

4.2 If the Principal has terminated the contract according to Section 3, or if the Principal is entitled to terminate the contract according to section 3, the Principal shall be entitled to

demand and recover from the Contractor liquidated damages equivalent to 5% of the contract value or the amount equivalent to Security Deposit/ Performance Bank Guarantee, whichever is higher.

Section 5 - Previous Transgression

5.1 The Bidder declares that no previous transgressions occurred in the last 3 years with any other company in any country conforming to the anti-corruption approach or with any other Public Sector Enterprise in India that could justify his exclusion from the tender process.

5.2 If the Bidder makes incorrect statement on this subject, he can be disqualified from the tender process or the contract, if already awarded, can be terminated for such reason.

Section 6 - Equal treatment of all Bidders/ Contractors / Sub-contractors

6.1 The Principal will enter into agreements with identical conditions as this one with all Bidders and Contractors. In case of sub-contracting, the Principal contractor shall be responsible for the adoption of IP by his sub-contractors and shall continue to remain responsible for any default by his sub-contractors.

6.2 The Principal will disqualify from the tender process all bidders who do not sign this pact or violate its provisions.

Section 7 - Criminal Charges against violating Bidders/ Contractors /Subcontractors

If the Principal obtains knowledge of conduct of a Bidder, Contractor or Subcontractor, or of an employee or a representative or an associate of a Bidder, Contractor or Subcontractor which constitutes corruption, or if the Principal has substantive suspicion in this regard, the Principal will inform the Vigilance Office.

Section 8 - Independent External Monitor(s)

8.1 The Principal appoints competent and credible Independent External Monitor for this Pact. The task of the Monitor is to review independently and objectively, whether and to what extent the parties comply with the obligations under this agreement.

8.2 The Monitor is not subject to instructions by the representatives of the parties and performs his functions neutrally and independently. He reports to the CMD, BHEL.

8.3 The Bidder(s)/ Contractor(s) accepts that the Monitor has the right to access without restriction to all contract documentation of the Principal including that provided by the Bidder(s)/ Contractor(s). The Bidder(s)/ Contractor(s) will grant the monitor, upon his request and demonstration of a valid interest, unrestricted and unconditional access to his contract documentation. The same is applicable to Sub-contractor(s). The Monitor is under contractual obligation to treat the information and documents of the Bidder(s)/ Contractor(s) / Sub-contractor(s) with confidentiality in line with Non- disclosure agreement.

8.4 The Principal will provide to the Monitor sufficient information about all meetings among the parties related to the contract provided such meetings could have an impact on the contractual relations between the Principal and the Contractor. The parties offer to the Monitor the option to participate in such meetings.

8.5 The role of IEMs is advisory, would not be legally binding and it is restricted to resolving issues raised by an intending bidder regarding any aspect of the tender which allegedly restricts competition or bias towards some bidders. At the same time, it must be understood that IEMs are not consultants to the Management. Their role is independent in nature and the advice once tendered would not be subject to review at the request of the organization.

8.6 For ensuring the desired transparency and objectivity in dealing with the complaints arising out of any tendering process, the matter should be examined by the full panel of IEMs jointly as far as possible, who would look into the records, conduct an investigation, and submit their joint recommendations to the Management.

8.7 The IEMs would examine all complaints received by them and give their recommendations/ views to CMD, BHEL, at the earliest. They may also send their report directly to the CVO and the Commission, in case of suspicion of serious irregularities requiring legal/ administrative action. IEMs will tender their advice on the complaints within 10 days as far as possible.

8.8 The CMD, BHEL shall decide the compensation to be paid to the Monitor and its terms and conditions.

8.9 IEM should examine the process integrity, they are not expected to concern themselves with fixing of responsibility of officers. Complaints alleging mala fide on the part of any officer of the organization should be looked into by the CVO of the concerned organisation.

8.10 If the Monitor has reported to the CMD, BHEL, a substantiated suspicion of an offence under relevant Indian Penal Code/ Prevention of Corruption Act, and the CMD, BHEL has not, within reasonable time, taken visible action to proceed against such offence or reported it to the Vigilance Office, the Monitor may also transmit this information directly to the Central Vigilance Commissioner, Government of India.

8.11 The number of Independent External Monitor(s) shall be decided by the CMD, BHEL.

8.12 The word `Monitor' would include both singular and plural.

Section 9 - Pact Duration

9.1 This Pact shall be operative from the date IP is signed by both the parties till the final completion of contract for successful bidder and for all other bidders 6 months after the contract has been awarded. Issues like warranty / guarantee etc. should be outside the purview of IEMs.

9.2 If any claim is made/ lodged during currency of IP, the same shall be binding and continue to be valid despite the lapse of this pact as specified above, unless it is discharged/ determined by the CMD, BHEL.

Section 10 - Other Provisions

10.1 This agreement is subject to Indian Laws and jurisdiction shall be registered office of the Principal, i.e. New Delhi.

10.2 Changes and supplements as well as termination notices need to be made in writing. Side agreements have not been made.

10.3 If the Contractor is a partnership or a consortium, this agreement must be signed by all partners or consortium members.

10.4 Should one or several provisions of this agreement turn out to be invalid, the remainder of this agreement remains valid. In this case, the parties will strive to come to an agreement to their original intentions.

10.5 Only those bidders / contractors who have entered into this agreement with the Principal would be competent to participate in the bidding. In other words, entering into this agreement would be a preliminary qualification.

---	---
For & On behalf of the Principal	For & On behalf of the Bidder/ Contractor
(Office Seal)	(Office Seal)
Place----------	
Date----------	
Witness:_____	Witness:_____
(Name & Address) _____	(Name & Address) _____
_____	_____

////////Pl get letter from M/s……(OEM/TECHNOLOGY PARTNER) ON their letter head" //////////

Ref: Date:

To

BHARAT HEAVY ELETRICALS LIMITED
ELECTRONICS DIVISION,
MYSURU ROAD,
BENGALURU-560026.
INDIA.

Kind Attention: (Tender Officer Name) Mr.
Ref: <<<<RFQ no>>>>>
Subject: Autorisation letter for……..

We, M/s…… …….. here by inform BHEL that M/s. …… is the only authorized representative of M/s……. in India and we do not have any other authorized representative for our company in India. Also we hereby authorize M/s….., India to receive tender enquiries , submit quotation, participate in tendering process in BHEL –EDN-Bengaluru - 560026 like technical and commercial negotiation, Reverse Auction on behalf of M/s……(OEM).

M/s…….. (OEM) will not quote directly to customers like BHEL in India. We honour all the commitments made by M/s……,India on behalf of M/s…….,(OEM) for all the tenders w.r.t technical and commercial terms finalised between BHEL and our authorized representative. M/s……..,(OEM) will supply material from ---------- based on the purchase order placed by BHEL and based on the commitment made by our authorized representative M/s. …….

We, M/s…….(OEM) will also stand guarantee for the system supplied by M/s……. for period of …….as per RFQ no……

(AUTHORISED SIGNATORY)

Format no 2A Rev 03

Self-Certification on the letter head of the company

In line with Government Public Procurement Order No. P-45021/2/2017-BE-II dt. 15.06.2017, P-45021/2/2017-PP (BE-II) dated 28.05.2018, P-45021/2/2017-PP (BE-II) dated 29.05.2019 and P-45021/2/2017-PP (BE-II) dated 16.09.2020, we hereby certify that

……

(Supplier name) are local supplier meeting requirement of minimum local content (50%) defined in as above orders for the material against Enquiry No

……

……

……

Details of location at which local value addition will be made is as follows:

……

……

……

We also understand, false declarations will be in breach of the Code of Integrity under Rule 175(1)(i)(h) of the General Financial Rules for which a bidder or its successors can be debarred for up to two years as per Rule 151 (iii) of the General Financial Rules along with such other actions as may be permissible under law.

Date:
Place:

Signature:
Name and Designation:
Mobile no:
Office Telephone No:
Email ID:
Office Seal:

ANNEXURE C

List of Documents to be submitted by Vendors/Subcontractors for SPV Contracts.		Confirmation on submission	DEVIATION OR REMARKS
IR Documents (Type - A): For all Civil & I&C & O&M			
Sl No.	**Documents**		
1	Wage Sheet (Form 17)	YES	
2	Attendance Register (w.r.t Sl No.1)	YES	
3	Workman Policy & Additional Insurance (Automotive Liability, Group Service Insuarnce Policy etc	YES	
4	PF Challan	YES	
5	ESI (Employee State Insurance)	YES	
6	ECR (Electronic Challan Receipt)	YES	
7	Bank Statement for PF deposit	YES	
8	RCS (Remittance Confirmation Slip)	YES	
Quality Documents (Type - B): For all MMS Civil Works			
Sl No.	**Documents**		
1	FQA (Field Quality Assuarance)	NA	
2	Field Content, Slump Test	NA	
3	Gradiation of Aggregate (10mm, 20mm)	NA	
4	Fine Aggregate Test (for Sand)	NA	
5	Cube Test Registered	NA	
6	Material Test Certificate for Steel & Cement	NA	
7	Consumption Register for Steel & Invoice	NA	
8	Pour Card for Concreting purpose	NA	
9	Royalty Reports (10mm, 20mm, Sand)	NA	
10	Sand Soundess Test Reports	NA	
11	Slump Test Register	NA	
12	Sieve Analysis, Flakiness Index, Elongation Index - Register to be maintained	NA	
13	Moisture Content Coarse and Fine Aggregate - Register to be maintained	NA	
14	Water Test Report for Concrete	NA	
15	Design Mix Report for Concrete	NA	
Quality Documents (Type - B): For all Civil related Works			
Sl No	**Documents**		
1	FQA (Field Quality Assuarance)	NA	
2	Field Content, Slump Test	NA	
3	Gradiation of Aggregate (10mm, 20mm)	NA	
4	Fine Aggregate Test (for Sand)	NA	
5	Cube Test Registered	NA	
6	Material Test Certificate for Steel & Cement	NA	
7	Consumption Register for Steel & Invoice	NA	
8	Pour Card for Concreting purpose	NA	
9	Royalty Reports (10mm, 20mm, Sand)	NA	
10	Sand Soundess Test Reports	NA	
11	Warpage of Bricks Test Reports	NA	
12	Core Cutting (Compaction Test) - Roads & Pathways	NA	
13	Slump Test Register	NA	
14	Sieve Analysis, Flakiness Index, Elongation Index - Register to be maintained	NA	
15	Moisture Content Coarse and Fine Aggregate - Register to be maintained*	NA	
16	Brick Test Reports	NA	
17	Plastering profile and thickness	NA	
18	Compaction test beneath floor of all buildings. - Reports	NA	
19	Test Certificates for Paint, Glan, Glazing, etc.	NA	
20	Test Certificates Aluminium Section for doors and windows (Anodisation Certificates also)	NA	
21	BBS for Buildings	NA	
22	Water Test Report for Concrete	NA	
23	Design Mix Report for Concrete	NA	

Quality Documents: for Electrical & Mechanical Installation Works (BOS)			
Sl No	Documents		
1	FQA (Field Quality Assuarance)	YES	
2	Inspection Reports	YES	
3	Guarantee Certificates	YES	
4	Factory Acceptance Test Reports	YES	
5	Commissioning Reports	YES	

NOTE:

*** This list of documents is indicative and intended towards all Solar Projects.**

*** Apart from the above, any other document required by the Customer and which are mandatory for Billing by BHEL to the Customer, the same respective vendors.**

GUIDELINES FOR
REVERSE AUCTION - 2020

(AA:SSP:RA:04)
revised as on 04.03.2020

(applicable for all NITs issued on or after 04.06.2020)

Note: Abridged version for information of the bidders

ABRIDGED VERSION

SOURCING STRATEGY & POLICY
CORPORATE OPERATIONS MANAGEMENT

BHARAT HEAVY ELECTRICALS LIMITED

Regd. Office: BHEL House, Siri Fort, New Delhi – 110049, India
Website: www.bhel.com
CIN: L74899DL1964GOI004281

1.0 Scope

This document describes the guidelines to be followed by each Unit/ Division/ Region for conducting Reverse Auction (RA) for procurement of material/ works/ services. These guidelines will be applicable for all purchases/ contracts to be awarded under Purchase/ Works policy and the RA shall follow the philosophy of English Reverse (No ties).

English Reverse (No ties) is a type of auction where the starting price and bid decrement are announced before start of online reverse auction. The interested bidders can thereupon start bidding in an iterative process wherein the lowest bidder at any given moment can be displaced by an even lower bid of a competing bidder, within a given time frame. The bidding is with reference to the current lowest bid in the reverse auction. All bidders will see the current lowest quoted price and their rank. The term 'No ties' is used since more than one bidder cannot give an identical price, at a given instant, during the reverse auction. In other words, there shall never be a tie in the bids.

3.0 Upfront declaration in NIT

Wherever it is felt that procurement may be done through Reverse Auction, the bids shall be invited in two parts/ three parts or single part bid (Price Bid) where Techno-Commercial MoU already exists. Wherever, the evaluation is done for individual line item, separate sealed envelope price bid for each line item shall be taken.

Decision to go for RA would be taken before floating of the tender. In case it is decided to go for RA, same shall be declared upfront in NIT by inserting the following **clause:**

"BHEL shall be resorting to Reverse Auction (RA) (Guidelines as available on www.bhel.com) for this tender. RA shall be conducted among all the techno-commercially qualified bidders.

Price bids of all techno-commercially qualified bidders shall be opened and same shall be considered as initial bids of bidders in RA. In case any bidder(s) do(es) not participate in online Reverse Auction, their sealed envelope price bid along with applicable loading, if any, shall be considered for ranking."

ABRIDGED VERSION

6.0 Business rules for RA

Model Annexure-I is attached.

7.0 Role of Service Provider

- Acknowledge the receipt of mandate from BHEL.
- Contact the bidders, provide business rules and train them, as required.
- Get the process compliance form signed by all the participating bidders before RA event.
- Conduct the event as per the contract and business rules.
- Submit the Login Reports, Results, History sheet and authorized final bid from the bidders.
- To obtain price breakup from successful bidder and submit the same to BHEL.

10.0 Reverse Auction Process

10.1 Reverse Auction will be conducted if three or more bidders are techno-commercially qualified. In case of more than four techno-commercially qualified bidders, H1 bidder (whose quote is highest in sealed envelope price bid) shall not be allowed to participate in RA. However, there will be no H1 removal in case H1 happens to be MSE or qualifying under PPP-MII, Order 2017 irrespective of the number of bidders qualifying techno-commercially.

In case of multiple H1 bidders, all H1 bidders (excluding MSEs and bidders qualifying under PPP-MII, Order 2017) shall be removed provided minimum three bidders remain in fray, else no H1 removal.

10.2 During RA, all bidders will see their rank and current L1 price and their ranking L1, L2 etc. on the screen. Once the RA is done, the ranking status would be based on the last quoted price of the bidder(s) irrespective of the quote received in RA or sealed envelope price bid.

10.3 No bidder shall be allowed to lower its bid below the current L1 by more than 5 decrements at one go.

ABRIDGED VERSION

13.0 Processing of case after RA

13.1 Wherever the evaluation is done on total cost basis, after Reverse Auction, prices of individual line items shall be reduced on pro-rata basis.

13.2 In case of splitting requirement, H1 bidder(s) who were removed from participation in RA may also be considered for counter offer if the pre-stated (NIT) numbers of suppliers do not accept the counter offer.

15.0 Others

15.2 In case of enquiry through e-Procurement, the sealed electronic price bid (e-bid) is to be treated as sealed envelope price bid.

15.3 BHEL will inform bidders the details of service provider who will provide business rules, all necessary training and assistance before commencement of online bidding.

15.4 Bidders are advised to read the 'Business Rules' indicating details of RA event carefully, before reverse auction event.

---xxx---

ABRIDGED VERSION

Doc. No. AA:SSP:RA:04
Dated: 04.03.2020

Business Rules for Reverse Auction

Annexure – I

This has reference to tender no ***{tender number….date**…}*. BHEL shall finalise the Rates for the supply of *{item name}* through Reverse Auction mode. BHEL has made arrangement with M/s. *{Service provider},* who shall be BHEL's authorized service provider for the same. Bidders should go through the instructions given below and submit acceptance of the same.

The technical & commercial terms are as per (a) BHEL Tender Enq. No. {…} dated {...}, (b) Bidders' technical & commercial bid (in case of two part bid) and (c) subsequent correspondences between BHEL and the bidders, if any.

1. Procedure of Reverse Auctioning

i. Price bids of all techno-commercially qualified bidders shall be opened.

ii. **Online Reverse Auction**: The 'bid decrement' will be decided by BHEL.

iv. Bidders by offering a minimum bid decrement or the multiples thereof can displace a standing lowest bid and become "L1" and this continues as an iterative process. However, no bidder shall be allowed to lower its bid below the current L1 by more than 5 decrements at one go.

v. After the completion of the online reverse auction, the Closing Price (CP) shall be available for further processing.

vi. Wherever the evaluation is done on total cost basis, after Reverse Auction, prices of individual line items shall be reduced on pro-rata basis.

2. Schedule for reverse auction: The Reverse Auction is tentatively scheduled on *{date}: ;{start time}: ;{Close Time: }*.

3. Auction extension time: If a bidder places a bid in the last {…} minutes of closing of the Reverse Auction and if that bid gets accepted, then the auction's duration shall get extended automatically for another {…} minutes, for the entire auction (i.e. for all the items in the auction), from the time that bid comes in. Please note that the auto-extension will take place only if a bid comes in those last {…} minutes and if that bid gets accepted as the lowest bid. If the bid does not get accepted as the lowest bid, the auto-extension will not take place even if that bid might have come in the last {…} minutes. In case, there is no bid in the last {…} minutes of closing of Reverse

ABRIDGED VERSION

Auction, the auction shall get closed automatically without any extension. However, bidders are advised not to wait till the last minute or last few seconds to enter their bid during the auto-extension period to avoid complications related with internet connectivity, network problems, system crash down, power failure, etc.

The above process will continue till completion of Reverse Auction.

Complaints/ Grievances, if any, regarding denial of service or any related issue should be given in writing thru e-mail/ fax to M/s. {Service provider} with a copy to BHEL within 15 minutes prior to initial closing time of Online Reverse Auction.

4. **Bid price:** The Bidder has to quote the {……} Price inclusive of Packing & Forwarding charges, all the routine & type tests as per tender scope, taxes, duties, freight and insurance as specified in tender document. including loading (if indicated by BHEL due to deviations in technical/ commercial terms) for the Items specified. Details are as shown in Excel Sheet for calculation of total cost to BHEL (To be specified by Unit as per NIT conditions).

5. **Bidding currency and unit of measurement:** Bidding will be conducted in *Indian Rupees* per *Unit* of the material as per the specifications {...}

   In case of foreign currency bids, exchange rate (TT selling rate of State Bank of India) as on scheduled date of tender opening (Part-I bid) shall be considered for conversion in Indian Rupees. If the relevant day happens to be a Bank holiday, then the forex rate as on the previous bank (SBI) working day shall be taken.

6. **Validity of bids:** Price shall be valid for {… *days}* from the date of reverse auction. These shall not be subjected to any change whatsoever.

7. **Lowest bid of a bidder**: In case the bidder submits more than one bid, the lowest bid at the end of Online Reverse Auction will be considered as the bidder's final offer to execute the work.

8. Unique user IDs shall be used by bidders during bidding process. All bids made from the Login ID given to the bidders will be deemed to have been

ABRIDGED VERSION

made by the bidders/ bidders' company.

9. **Post auction procedure**: BHEL will proceed with the Lowest Bid in the Reverse Auction for further processing.

11. Computerized reverse auction shall be conducted by BHEL (through M/s {*Service Provider*}), on pre-specified date, while the bidders shall be quoting from their own offices/ place of their choice. Internet connectivity shall have to be ensured by bidders themselves.

    During the RA process if a bidder is not able to bid and requests for extension of time by FAX/ email/ phone then time extension of additional 15 minutes will be given by the service provider provided such requests come before 5 minutes of auction closing time. However, only one such request per bidder can be entertained.

    In order to ward-off contingent situation of connectivity failure bidders are requested to make all the necessary arrangements/ alternatives whatever required so that they are able to circumvent such situation and still be able to participate in the reverse auction successfully. Failure of power or loss of connectivity at the premises of bidders during the Reverse auction cannot be the cause for not participating in the reverse auction. On account of this, the time for the auction cannot be extended and neither BHEL nor M/s. {*Service provider*} is responsible for such eventualities.

12. Proxy bids: Proxy bidding feature is a pro-bidder feature to safe guard the bidder's interest of any internet failure or to avoid last minute rush. The proxy feature allows bidders to place an automated bid in the system directly in an auction and bid without having to enter a new amount each time a competing bidder submits a new offer. The bid amount that a bidder enters is the minimum that the bidder is willing to offer. Here the software bids on behalf of the bidder. This obviates the need for the bidder participating in the bidding process until the proxy bid amount is decrementally reached by other bidders. When proxy bid amount is reached, the bidder (who has submitted the proxy bid) has an option to start participating in the bidding process.

    The proxy amount is the minimum amount that the bidder is willing to offer. During the course of bidding, the bidder cannot delete or change the

ABRIDGED VERSION

amount of a proxy bid.

Bids are submitted in decrements (decreasing bid amounts). The application automates proxy bidding by processing proxy bids automatically, according to the decrement that the auction originator originally established when creating the auction, submitting offers to the next bid decrement each time a competing bidder bids, regardless of the fact whether the competing bids are submitted as proxy or standard bids. However, it may please be noted that if a manual bid and proxy bid are submitted at the same instant manual bid will be recognized as the L1 at that instant.

In case of more than one proxy bid, the system shall bid till it crosses the threshold value of 'each lowest proxy bid' and thereafter allow the competition to decide the final L1 price.

Proxy bids are fed into the system directly by the respective bidders. As such this information is privy only to the respective bidder(s).

13. Bidders are advised to get fully trained and clear all their doubts such as refreshing of Screen, quantity being auctioned, tender value being auctioned etc from M/s {*Service provider*}.

14. M/s. {*Service provider*}, shall arrange to demonstrate/ train the bidder or bidder's nominated person(s), without any cost to bidders. M/s. {*Service provider*}, shall also explain the bidders, all the business rules related to the Reverse Auction. Bidders are required to submit their acceptance to the terms/ conditions/ modalities before participating in the Reverse Auction in the process compliance form as enclosed. Without this, the bidder will not be eligible to participate in the event.

15. Successful bidder shall be required to submit the final prices (L1) in prescribed format for price breakup, quoted during the Online Reverse Auction, duly signed and stamped as token of acceptance without any new condition (other than those already agreed to before start of auction), after the completion of auction to M/s. {*Service provider*} besides BHEL within two working days of Auction without fail.

16. Any variation between the final bid value and that in the confirmatory signed price breakup document will be considered as tampering the tender

ABRIDGED VERSION

process and will invite action by BHEL as per extant guidelines for suspension of business dealings (as available on www.bhel.com).

17. Bidders' bid will be taken as an offer to execute the work/ supplies the item as per enquiry no. {…} dt. {…}. Bids once made by the bidder, cannot be cancelled/ withdrawn and bidder shall be bound to execute the work as mentioned above at bidder's final bid price. Should bidder back out and not execute the contract as per the rates quoted, BHEL shall take action as per extant guidelines for suspension of business dealings (as available on www.bhel.com).

18. Bidders shall be able to view the following on their screen along with the necessary fields during Online Reverse Auction:

    a. Leading (Running Lowest) Bid in the Auction (only total price of package)
    b. Bid Placed by the bidder
    c. Start Price
    d. Decrement value
    e. Rank of their own bid during bidding as well as at the close of auction.

19. BHEL's decision on award of contract shall be final and binding on all the Bidders.

20. BHEL reserves the right to extend, reschedule or cancel the Reverse Auction process at any time, before ordering, without assigning any reason, with intimation to bidders.

21. BHEL shall not have any liability to bidders for any interruption or delay in access to the site irrespective of the cause. In such cases, the decision of BHEL shall be binding on the bidders.

22. Other terms and conditions shall be as per bidder's techno-commercial offers and other correspondences, if any, till date.

23. If there is any clash between this business document and the FAQ available, if any, in the website of M/s. {*Service provider*}, the terms & conditions given in this business document will supersede the information contained in the FAQs. Any changes made by BHEL/ service provider (due to unforeseen contingencies) after the first posting shall be deemed to have been

ABRIDGED VERSION

accepted if the bidder continues to access the portal after that time.

24. Bidder shall not divulge either his Bids or any other exclusive details of BHEL to any other party. If the Bidder or any of his representatives are found to be involved in Price manipulation/ cartel formation of any kind, directly or indirectly by communicating with other bidders, action *as per extant BHEL guidelines for suspension of business dealings (as available on www.bhel.com)*, shall be initiated by BHEL.

ABRIDGED VERSION

On the letter head of the bidder

REF: <<<internal reference of vendor>>>

Declaration to be mandatorily submitted by the Bidder, as a compliance to Rule 144(xi) of GFR, 2017 amendment dt 23.07.2020 issued by Ministry of Finance, Govt. of India.

"I have read the clause regarding restrictions on procurement from a bidder of a country which shares a land border with India; I certify that this bidder is not from such a country or, if from such a country, has been registered with the Competent Authority. I hereby certify that this bidder fulfils all requirements in this regard and is eligible to be considered."

DATE: Authorized signatory

Office seal

Place:

COPYRIGHT AND CONFIDENTIAL

The information on this document is the property of Bharat Heavy Electricals Limited.

It must not be used directly or indirectly in anyway detrimental to the interest to the company

Technical specification

for

Design, Supply, Installation and Commissioning
of 220kV switchyard bay
and
Interconnection between solar plant and Switchyard
for 20MW (AC) Solar Photovoltaic Grid-connected Power plant
at

Gandhar, Gujarat

Revision details :	Prepared by	Approved by	Date
	Sheetal Prasad	Rachi	18-09-2020

CONTENTS

1	Introduction	
	1.1	Overall project outline
	1.2	Brief outline of vendor scope
	1.3	Location/ site address of power plant
	1.4	Enclosures to this specification
	1.5	Other indicative details to the bidders for tender purpose
2	List of deliverables to be offered by vendor	
3	Documents to be submitted along with offer	
4	Detailed scope of BHEL and vendor	
	4.1	220kV switchyard at NTPC SUBSTATION
	4.2	33kV Cable from SPV power plant to NTPC substation
	4.3	Pre-commissioning / commissioning / State, CEIG clearances / Liaison etc
	4.4	General conditions applicable during supply, installation and commissioning phase
5	Technical Data	
	5.1	Scope and general information
	5.2	Services to be performed by the equipment supplied
	5.3	Site supervision of equipment
	5.4	Clearances
	5.5	System Parameters
	5.6	Type Test Requirements for Equipments
	5.7	RIV Test
	5.8	Circuit breaker
	5.9	Control and Protection
	5.10	Disconnectors and earth switches (Isolators and accessories)
	5.11	Instrument transformers
	5.12	Surge arrestor
	5.13	Post insulator
	5.14	Metering System
	5.15	Fire Protection System
	5.16	33KV Items
	5.17	Requirement of auxiliary items
	5.18	Installation methodology
6	Switchyard Civil Works Design Consideration	
	6.1	Submissions
	6.2	Design Criteria
	6.3	Design Parameters for Gantry Towers & Beams, Lightning Mast and Equipment Supporting Structures (as applicable)
	6.4	Loads and Loading Conditions
	6.5	Factor of safety
	6.6	Design consideration for Equipment support

	6.7	Special design consideration for Lightning Mast (as applicable):
	6.8	Minimum Thickness of Members & Galvanization
	6.9	Design consideration for Foundation
	6.10	Gravel Filling
	6.11	Cable Trenches
	6.12	Switchyard Drains (as applicable)
	6.13	Switchyard Road (as applicable)
	6.14	Switchyard Fence (as applicable)
	6.15	Corrosion protection measures
	6.16	Miscellaneous Specifications
	6.17	Requirements for Concrete
	6.18	Materials
	6.19	Drawings
	6.20	Codes and Standards
7	Safety Management	

1.0 INTRODUCTION

1.1 Overall project outline

Bharat Heavy Electricals Limited (BHEL), Electronics Division, Bangalore is setting up a Solar photovoltaic (SPV) power plant for NTPC at Gandhar, Distt Bharuch, Gujarat within Gas Based Power Plant Installation.
Solar PV modules employed at the plant generates DC electricity that in turn is inverted to AC in the range 600-800 V. Output of each solar block (5 MWp) is stepped up to 33kV. All the blocks are combined to achieve the 20MW output as per the power plant rating at main pooling switchgear.
From main pooling switchgear, cable/ transmission line shall be run upto Power transformer in 220KV Switchyard bay proposed for solar plant in existing NTPC Switchyard. The 220 kV Switchyard shall be with Double Main Bus & Transfer Switching Scheme as indicated in Tender SLD.
Details are given in subsequent clauses.

1.2 Brief outline of vendor scope

Vendor scope includes activities but not limited to design, engineering, drafting of drawings, obtaining approval from BHEL/NTPC/STU/PGCIL/CEIG /CEA whichever is applicable for the drawings, manufacture/ testing/ inspection at manufacturer's works, packing, supply, transportation, transit insurance, delivery to site, unloading, storage, erection of switchyard structures/equipment (excluding civil foundation work), coordination / liaison with concerned state / central authorities such as GETCO/ CEIG/ CEA/ GEDA etc, and commissioning for the following activities of the project:

(1) 33kV/220kV switchyard at NTPC substation consisting of 1 no of 220kV bay with all equipment viz CTs, CVTs, SF6 Breaker, Isolators (with & without earth switch), Surge Arrestors, metering panel etc including erection and commissioning of 20MVA, 33/220kV power transformer along with Fire water spray system.

(2) This 33/220 KV switchyard bay will be replica of existing adjacent 33/220 KV switchyard bay. In view of this, vendor shall visit the Switchyard site at Gandhar and obtain all necessary details from site before they participate in tender.

(3) Interconnection between 33 KV Main pooling station at Solar PV Plant and Power Transformer at NTPC Switchyard shall be partly cable laying (underground), partly cable laying in air in RCC cable trench/ on cable tray and partly 33KV transmission line. The distance between Main pooling station and power transformer is 1 KM approximately. All design, supply, installation including civil works required for Interconnection between SPV power plant Main pooling station to switchyard bay and extension further to 33 KV side of Power transformer at 220 KV substation will be in vendor's scope. There shall be multiple crossings of road, existing control cable trench, drain, Switchyard fencing. Part of cable trench route is within existing switchyard and part of the cable trench route is narrow space between fence/RCC trench/ Drain. Vendor shall submit the interconnection methodology for BHEL/ NTPC approval prior to start of the work. All items e.g. 33KV cable, cable termination kit on both ends, cable jointing kit, cable support structure, cable trays, Isolator, Insulators, Pole, BPI, 30 KV LA, LA equipment structure, cable route markers, hume pipes for crossings, cutting and repair works for fencing/drain/road/ control cable trenches etc including all civil works will be in scope of vendor.

(4) DC power will be extended from NTPC's existing switchyard control room to Main control room in Solar plant through Copper cable. Vendor shall supply, lay and terminate the cable at both

ends. Vendor shall supply and install suitable DB for extending DC supply from existing source to switchyard items and for solar plant. All item like cables, DBs, termination hardware and accessories for the same will be in scope of vendor.

(5) OFC cables will be laid and terminated between solar plant main control room and Switchyard control room for interconnection. Cable supply and termination accessories will be BHEL scope. Laying and termination of cables will be in scope of vendor.

(6) Obtaining statutory clearance from the relevant agencies (PGCIL, STU, GETCO, GEDA, CEA, CEIG, GUVNL, SLDC etc whichever applicable) required **for Charging 33/220 KV substation bay and 33KV installation (as in vendor's scope) for charging and commissioning of 20 MW Solar plant**.

(7) Vendor shall follow NTPC approved vendor's list (attached along with specifications) for ordering of items.

The vendor shall have design capability for substation / switchyard. In case they do not have design/drafting capability, after receiving purchase order from BHEL, the vendor shall tie up with competent design consultants in which case vendor shall submit the credentials of the proposed consultants to BHEL for approval by BHEL/NTPC. Vendor shall award the supplies on the NTPC approved Vendors only. All drawings/ design documents shall be originated by the consultants, endorsed by the vendor clearly stating the name of the project, names of clients (BHEL/NTPC), drawing/document number, revision number, number of sheets etc.

All works shall be tested as per BHEL/NTPC/PGCIL/STU approved FQP that will be issued during course of project execution. All third party testing shall be carried out only at NABL accredited laboratories (or) Government laboratories.

Note: The above is only a broad outline of vendor scope for the sake of introduction. The detailed vendor scope is listed under sections 4.0 and 5.0 and elaborated in various other sections of this specification.

1.3 Location/ site address of power plant:

The 20 MW Solar PV Plant shall be setup at NTPC Gandhar Gas Power Plant in Gujarat.

District	Bharuch, Gujarat
Nearest Highway	NH 64 (10 km)
Nearest Railway Station	Bharuch Jn (25 km)
Nearest Commercial Airport	Vadodara (78 km)
Indicative Coordinate	21°49'19.0"N 73°06'53.0"E

1.4 Enclosures to this specification

(a) Tentative AC SLD of the overall 20 MW SPV plant including 220KV bay SLD
(b) Tentative Existing 220 KV NTPC Substation SLD
(c) Tentative Solar plant layout indicating main pooling Station and 220 KV Switchyard bay
(d) Tentative Earth mat design in existing 220KV Switchyard
(e) Tentative Equipment structure drawings
(f) Indicative Manufacturing Quality plan, Field quality plans and Quality assurance chapters
(g) List of NTPC approved vendors

Note that the documents are tentative and for tender purpose only. The same may change based on final drawing approval from NTPC, as submitted during detailed engineering by bidder

1.5 Other indicative details to the bidders for tender purpose:

(a) Distance between Main pooling station in Solar plant to location of power transformer in 220kV switchyard: 1 km approx.

(b) At NTPC substation side, AC/DC aux supplies for ABT metering panel and 220kV switchyard equipments in vendor scope shall be taken from the ACDB/ DCDB panels in NTPC 220KV substation Control room (2nd floor) located at approx. 1 km away from switchyard.

(c) Vendor shall visit project site prior to submission of bids so as to make a clear assessment of site conditions such as:
(1) land terrain,
(2) Nature of soil,
(3) Arrangement of existing bus (Main bus1-, Main bus-2 and Transfer bus) at NTPC substation to which the feeder extension bay will be hooked up
(4) Other details like location of extension bay and the C&R Panel Room/Main Substation Control Room for the purpose of power supply / control cabling works.
(5) Details of Earth mat extension and cable trenching and laying works
(6) Cable Routing for 33kV Underground Cable from Plant to NTPC substation.

(d) **BIDDER SHALL EMPLOY MINIMUM 70% OF LOCAL WORK FORCE (BELONGING TO DHUVARAN, GUJARAT) DURING EXECUTION OF WORKS.**

2.0 LIST OF DELIVERABLES TO BE OFFERED BY VENDOR

#	Deliverables	Qty
2.1	**Supply of all electrical equipment and other materials of 220kV switchyard at NTPC SUBSTATION:** such as CTs, CVTs, surge arrestors / lightning arrestors, Bus post insulators/ Bus Tension Insulators / Bushings, HDB / Tandem Isolators / dis-connectors, Earth switches, Motors & related controls for isolators/dis-connectors / earth switches, SF6 circuit breakers, ACSR conductors, Electrical cables & cable trays, Marshalling boxes / panels / distribution boards, ABT meter for Internal plant metering, TEM meters, Metering Panel with Main & Check and standby Meters, Control and Relay panel with BCPU, SCADA connectivity from switchyard equipment, RTU Panel for SLDC connectivity, SAS, Earth wire, Earth mat items (rods/risers etc.), Earth strips/ electrodes etc together with all related accessories (disc insulators, clamps, connectors/ bimetallic where required, cable glands/lugs/ties etc.) and complete set of hardware required to meet the electrical requirements of the switchyard , also all the related items required to hook up to the existing bay of NTPC substation, communication system as per NTPC/PGCIL/SLDC/RLDC/GETCO requirement, integration of new feeder bays with existing Communication/SCADA system at NTPC substation with all required equipment like Ethernet fiber switch, kiosk, LIU etc. as per NTPC requirement. There are three overhead 220 KV bus namely Main Bus 1, Main Bus 2 and Transfer bus. The output power of solar plant shall be hooked to these buses. Vendor scope shall also include supply of items for extension of existing High pressure water spray system for Power transformer fire protection. Detailed scope as per clause 5.15.2 of this spec.	1 Set

2.2	**Supply of structural items of 220kV switchyards:** for mounting the electrical equipment together with all related accessories and complete set of hardware required to meet the structural support requirements of the switchyards. This shall include suitable J-bolts, foundation hardware as may be applicable.	1 Set
2.3	**Supply of items towards Interconnection between Outgoer at solar plant and Power Transformer at 220KV Switchyard including OFC cabling and extending DC power to solar plant** Conducting of detailed route survey is in Vendor scope. Based on the route study, 33 KV Cables/ ACSR shall be supplied, laid and terminated by vendor suitably (underground in trenches and over cable trays/ in RCC trench with required steel structural supports (Corrosion resistance treated) and 33KV Transmission line as applicable). The methodology will be submitted to BHEL/NTPC for approval. The distance between Main pooling station and power transformer is 1 KM approximately. All supply required for Interconnection between SPV power plant Main pooling station to switchyard bay and extension further to 33 KV side of Power transformer at 220 KV substation will be in vendor's scope. There shall be multiple crossings of road, existing control cable trench, drain, Switchyard fencing. Part of cable trench route is within existing switchyard and part of the cable trench route is narrow space between fence/RCC trench/ Drain. All items e.g. 33KV cable, cable termination kit on both ends, cable jointing kit, cable support structure, cable trays, Isolator, Insulators, Pole, BPI, 30 KV LA, LA equipment structure, cable route markers, hume pipes for crossings etc will be in scope of vendor. DC power will be extended from NTPC's existing switchyard control room to Main control room in Solar plant through Copper cable (Minimum 2CX16 sqmm copper cable). Vendor shall supply, lay and terminate the cable at both ends. Vendor shall supply and install suitable DB for extending DC supply from existing source to switchyard items and for solar plant. All item like cables, DBs, termination hardware and accessories for the same will be in scope of vendor. OFC cables will be laid and terminated between solar plant main control room and Switchyard control room for interconnection. Cable supply and termination accessories will be BHEL scope. Laying and termination of cables will be in scope of vendor. Detailed scope as per section 4 of this spec.	1 set
2.4	**Supply of spare items for 220 kV switchyards:** Following spares shall be supplied along with main equipment:	1 set

Sl.No	Item Description	Quantity
1	220 kV Protection Current Transformer	1 No
2	216 kV Surge Arrester	1 No
3	Following spare for 220 kV HCB Isolator with 1E/S	
a	Male and female contact finger	1 set
b	Isolator Limit switch	1 set
c	One complete pole of Isolator with 1E/S alongwith Insulator & operating mechanism	1 No

2.5	**Installation of 220kV Switch Yard :** Vendor shall install Power transformer with accessories, all vendor supplied electrical equipment's and steel structures. Civil foundation work including RCC control cable trench construction, jelly spreading is in scope of BHEL. Earthing chambers will be made by Vendor. Mounting of cable trays and laying of cables, cable terminations / interconnections, installation of earthing electrodes, construction of earthing chambers with lids, earthing terminations extension of earth grid to existing earth mat of NTPC substation, together with all related activities etc., marking of all electrical equipment / cables, installation of sign / danger boards etc. and hooking up the switchyard to the existing bus (Main bus 1, Main bus 2 and Transfer bus) at 220KV substation. Scope shall also include installation of (vendor-supplied) ABT and TEM metering panels along with PQM meter for PPC (Class-A type) compliance as per CERC 2019 regulations including & all related electrical works such as cable trenching, laying, terminations, interconnections (including aux AC/DC supply & distribution boards as required for Metering Panels and other equipment), and earthing connections. Vendor scope shall also include extension work of existing High pressure water spray system for Power transformer fire protection. Detailed scope as per section 4.0 of this spec.	1 AU
2.6	**I&C for Interconnection between Outgoer at solar plant and Power Transformer at 220KV Switchyard including OFC cabling and extending DC supply to solar plant** (1 km approx) Conducting of detailed route survey is in Vendor scope. Based on the route study, Cables/ ACSR shall be laid suitably (underground in trenches and over cable trays/ in RCC trench with required steel structural supports (Corrosion resistance treated) and 33KV Transmission line as applicable). The methodology will be submitted to BHEL/NTPC for approval. The distance between Main pooling station and power transformer is 1 KM approximately. All design and installation works including civil and fabrication works required for Interconnection between SPV power plant Main pooling station to switchyard bay and extension further to 33 KV side of Power transformer at 220 KV substation will be in vendor's scope. There shall be multiple crossings of road, existing control cable trench, drain, Switchyard fencing. Part of cable trench route is within existing switchyard and part of the cable trench route is narrow space between fence/RCC trench/ Drain. All cutting and repair works for fencing/drain/road/ control cable trenches etc including related civil works will be in scope of vendor. Vendor shall submit the interconnection methodology for BHEL/ NTPC approval prior to start of the work. DC power will be extended from NTPC's existing switchyard control room to Main control room in Solar plant through Copper cable (Min 2CX16sqmm	1 AU

	Copper cable). Vendor shall supply, lay and terminate the cable at both ends. Vendor shall supply and install suitable DB for extending DC supply from existing source to switchyard items and for solar plant. All item like cables, DBs, termination hardware and accessories for the same will be in scope of vendor. OFC cables will be laid and terminated between solar plant main control room and Switchyard control room for interconnection. Cable supply and termination accessories will be BHEL scope. Laying and termination of cables will be in scope of vendor. Detailed scope as per section 4.0 of this spec.	
2.7	**Pre-commissioning inspections: All** checks / tests on 220kV switchyard equipment's / Power transformer / 33KV cabling/Line / C&R panel / CT / CVT / Isolator / SF6 Breaker / ABT metering panel etc and coordination / liaison activities with related state / central departments / GETCO/GUVNL/CEIG/GEDA/SLDC etc as applicable for necessary approvals/ clearances for drawings/ documents/ inspection at equipment manufacturers' works and at site by NTPC/PGCIL/STU/GETCO/ CEIG / GEDA /CEA and also for plant commissioning activities viz line-charging/ grid synchronization. Detailed scope as per section 4.0 of this spec	1 AU

Note 1: Final scope of supply and installation works for the feeder bay at NTPC substation and the 33KV Interconnection shall be as per customer requirement.

Note 2: There are no separate charges for design/ drafting of engineering documents viz drawings/ schemes/ layouts/ calculations etc. and consultancy, as these charges shall be deemed to be absorbed in the above line items.

3.0 DOCUMENTS TO BE SUBMITTED ALONG WITH OFFER

a) Statement expressing compliance to this BHEL specification (NIL deviation statement).
b) Acceptance to Indicative Manufacturing Quality plan, Field quality plans and quality assurance chapters

4.0 DETAILED SCOPE OF BHEL AND VENDOR

4.1 220kV switchyard at NTPC SUBSTATION

All 220kV Equipment Ratings shall be as per attached Single Line Diagram.

This switchyard bay area to be developed is located at existing NTPC substation and this Sub-station bay shall be replica of the existing sub-station bays next to area to be developed. The overall size and **layout of switchyard with 1 bay shall be proposed by the vendor** (for approval by BHEL/NTPC) based on the space required to accommodate the electrical equipment (including the 20 MVA power transformer that is in BHEL scope of supply, duly considering the spacing / clearances between the various electrical equipment as per relevant standards and Indian

electricity rules (1956), CBIP, state electricity board / GETCO/ DISCOM/ CEA/ CEIG regulations/ PGCIL/ any other statutory directives etc.

Accordingly, the respective scopes of BHEL and the vendor are listed as below, whereas detailed specifications are provided in other sections of this specification.

4.1.1 BHEL scope

	Scope description	**Quantity**
1	Supply of Outdoor, Oil Immersion type, 3-phase, 20MVA ONAF/12MVA ONAN, 220/33kV, YNYn0 Vector Group Power Transformer along with RTCC panel	1 No
2	Supply of OFC cables along with termination accessories and HDPE pipe for interconnection between solar plant and 220KV Switchyard control room will be supplied by BHEL.	1 No
3	Bushing NCTs and Bushing CT 400/1A for Transformer differential protection as part of power transformer	1 set
4	Construction of 20 MW solar power plant till 33KV Main pooling Switchgear installation	1 set
5	Construction of all civil foundations (220KV equipment foundations, power transformer foundation, oil pit construction, control cable trench construction within switchyard, spreading of stone jelly, fencing, major levelling and grading except for excavation/ levelling towards earthing and 33KV cable trench work). NOTE- i. Earthing chambers, pipeline works, Switchyard soil sterilization / antiweed treatment and any other related works not mentioned here and that may be required for bay construction shall be in vendor scope. ii. All civil foundation design will be prepared and submitted by vendor for BHEL/NTPC approval. iii. It will be vendor's responsibility to supervise the 220 KV foundation works being executed by Civil contractor of BHEL in line with approved drawings iv. Any civil works towards Interconnection work between solar plant and 220KV Switchyard/ control room shall be in vendor's scope. ***Civil design will be in vendor's scope.** ***Civil design and works for Interconnection work from solar plant to 220KV Switchyard will be in vendor's scope.**	1 set
6	Auxiliary supply (AC and DC) shall be tapped from existing 220KV substation control room. AC/DC Distribution boards, as required shall be in Vendor's scope.	1 set
7	SCADA system with GPS Time Synchronizing System	1 set

4.1.2 Vendor's scope

(a) Supply, Installation and commissioning

Supply, Unloading including BHEL supplied items for switchyard, installation, testing and commissioning as per relevant standards, Indian electricity rules (1956), CBIP, State electricity board / GETCO/ DISCOM/ CEA/ CEIG regulations/ GERC/Electricity Act-2003 etc. will be in vendor's scope and shall be as approved by BHEL/NTPC.

The new bay for this project shall be constructed by the vendor at the designated location in NTPC substation. Further, the bay shall be hooked up by the vendor to the existing bus.
It shall be the absolute responsibility of the Vendor to make an accurate assessment of the exact requirements of supply and installation as per site conditions. **ACCORDINGLY, VENDOR SHALL VISIT THE SITE PRIOR TO SUBMISSION OF OFFER.**

The vendor scope of supplies and works are listed here below, whereas detailed specifications of individual equipment / activities are provided in various sections of this specification.

1	Design calculations for equipment mounting structure, civil foundation, earth mat grid, Relay settings, Conductor sizing calculation etc for 220kV switchyard in Designated place at NTPC SUB STATION.
2	Unloading, Installation, testing and commissioning of 20MVA, 33/220 kV, YNyn0 Power transformer along with RTCC panel. **Note: RTCC panel shall be installed inside the existing NTPC Switchyard Control room which is 1 KM away approximately.**
3	Supply and installation of Control and relay panels along with the numerical relays and other components as required as per SLD. **Note: Control and Relay panel shall be installed inside the existing NTPC Switchyard Control room which is 1 KM away approximately.**
4	Supply, installation and commissioning of following outdoor switchyard items including mechanical operations (bolting, bending, welding etc.), electrical cabling, ACSR conductor terminations, terminations at marshalling boxes for CT/ CVT (PT) / bay marshalling kiosks, other related panels/ distribution boards and hardware, earthing connections etc. (a) 216kV, 10kA nominal discharge current, class-3 gapless metal oxide surge arrestor (LA) – 3 Nos (exclusive of spare quantity) (b) 245kV CVT (PT) (2-core) – 3 Nos for metering (c) 245kV CVT (PT) (3-core) – 3 Nos for protection (d) 245kV CT (1-core) – 3 Nos for metering (e) 245kV CT (5-core) – 3 Nos for protetction (f) 245kV 2000A Tandem Isolator, horizontal central break, triple pole, with Single earth switch, motor operated (locally) – 1 set (g) 245kV 2000A Tandem Isolator, horizontal central break, triple pole, with Double earth switch, motor operated (locally) – 1 set (h) 245kV 2000A Tandem DB Isolator, horizontal Double break, triple pole, without earth switch, motor operated (locally) – 2 sets (i) 245kV SF6 Motorized breaker with local/remote operation – 1 set (j) ABT meter- for internal metering network of NTPC as detailed in relevant clause along with PQM meter for PPC (Class-A type) compliance as per CERC 2019 regulations

	(k) 3 nos of TEM meters for tariff metering (Main, Check and Standby) along with metering panel (l) Bus post Insulator (BPI) and Bus Tension Insulator as per site requirement. (m) Switchyard structures Gantry, beams and towers– as per NTPC requirement (n) ACSR conductor and Al tubular conductor for connecting to Bus 1,2 & Transfer bus and normal ACSR conductor for connecting of LA, CT & PTs etc. (o) Control panel, Relay panel shall be supplied, erected and commissioned at Main control room located at 1 KM approx. away from switchyard. (p) Auxiliaries system such as Illumination system, DBs (q) Fire protection system (r) Special maintenance tools and tackles. (s) Power, control & special cables, earthing & lighting protection system etc. (t) GI structures with all necessary hardware for mounting the above electrical equipment's. (u) Disc insulators (suspension/ tension) along with other accessories such as clamps, hardware etc. – quantity as required. (v) ACSR conductor with related accessories for termination such as connectors/ bimetallic where required, clamps, hardware etc. – quantity as required. (w) Marshalling boxes for CTs/PTs – quantity as required (x) Bay marshalling kiosks – quantity as required (y) Motors and motor control boxes for GOS isolators/ earth switches (z) LT aux power supply cables and control cables (aa) Cable trays for laying of cables in cable trenches (bb) Underground earth mat grid items comprising of risers, electrodes, earth rods, earth chambers etc (cc) GI earth strips for earthing of structures, electrical equipment's, panels/ DBs/ marshalling boxes etc. (dd) Earth pits / chambers with lids. **Note:** LA shall have separate earthing. Any other items considered essential to meet the functional / operational requirements of the 220kV switchyard as per relevant standards or Indian Electricity rules (1956), CBIP, state electricity board/ GETCO/ DISCOM/ CEA/ CEIG/ any other statutory requirements etc.
5	Supply, Installation, Testing and commissioning of Substation Automation System (SAS) for SLDC Connectivity- both at 33kV and 132 kV feeder level. Real time data communication from SPV Plant (RTU) and extension of this data (Communication equipments) to SLDC as per LDC requirements shall be in the scope of the vendor.
6	**Telemetry Requirement:** The arrangement to transmit data required by the Load Dispatch Centre (LDC) from Solar plant to NLDC/RLDC/SLDC as per extant regulations and procedures for grid management upto switchyard at NTPC Gas power project shall be in vendor's scope. Necessary software and Hardware, including laying of Communication/Fibre Optic cable upto NTPC Switchyard substation required for communication of Solar plant data from Solar plant SCADA to Load Dispatch Center (LDC) is included in the vendor's scope. Communication link and communication controller/Gateway used for data communication to LDC shall be redundant (one for normal operation and other as hot standby). It is vendor's responsibility to update themselves with State LDC requirement for compliance related to Automatic Meter Reading (AMR), telemetry data, channel and procedures for engineering of telemetry solution accordingly.

	Cable supply, laying and termination in solar plant SCADA (at Main control room of solar plant) will be in vendor's scope.
7	Installation of BHEL supplied SCADA panel in NTPC control room and cable laying and termination for aux power and communication of all switchyard items in BHEL supplied SCADA. All associated items like cables, hardware etc supply as required will be in scope of vendor.
8	Extension of existing Heavy Water Spray system for fire protection of Power transformer as detailed in relevant clause. This include civil work in Vendor's scope.
9	Other switchyard related activities such as (a) marking / installation of all the switchyard equipment's and earthing locations, (b) all relevant danger and sign boards, (c) painting of steel structures etc. for protection against erosions and corrosions.
10	Sign boards, danger boards with inscriptions in three languages, Gujarati, Hindi and English as per Customer requirements.
11	Supply shall be as per final approved technical specifications / datasheets/drawings as approved by NTPC.

(b) Design, drawings, guaranteed technical particulars, quality plan, manuals for 220kV switchyard.

Vendor shall submit the following documents for BHEL/NTPC for approval within 7 days after receipt of purchase order or at every stage of project implementation as applicable and as mutually agreed with BHEL/NTPC.

1	Design calculations, as per relevant standards, together with drawings, layout and bill of materials shall be submitted for underground earth mat grid required for earthing of 220kV switchyard equipments for BHEL/NTPC approval. Vendor shall also obtain approval from concerned state / central approval agency such as GETCO/ DISCOM/ CEA/ CEIG etc. as applicable before commencement of supplies and works.
2	Preparing and obtaining approval of NTPC for Civil design. Civil work will be done by BHEL based on drawings as submitted by vendor.
3	Layout drawing of the complete 220kV switchyard, showing locations of various electrical equipment (including transformers), earth chambers, earthing of all structures cable trenches, marshalling boxes, other panels (if any), chain link fencing, stone jelly, steel gates etc.
4	Cross section diagram of 220kV switchyard, showing the overall dimensions (such as height, width, clearances etc.) of various electrical equipment mounted on the structures, gantries / beams etc.
5	The switchyard shall be suitable for outdoor application having saline atmosphere and shall have tropical and fungicidal treatment.
6	Detailed bill of materials of 220kV switchyard, with item description, rating, make, model number, item quantity shall be submitted.
7	Manufacturing quality plan with routine/ type / acceptance tests, sampling plan, applicable test standards shall be submitted for BHEL/NTPC approval for all the vendor-supplied items including but not limited to 220kV switchyard equipment's (SF6 breaker, CTs, PTs, GOS isolators, Earth switches, BPI etc.), Control panel, Relay panel, marshalling boxes of individual electrical equipment, bay marshalling kiosks, other panels (if any applicable), HT/LT/ control cables, ACSR conductors, steel

	structures, cable trays, towers, gantries, beams, motors & motor control boxes/panels and all related accessories such as insulators of all types, clamps, connectors etc.
13	The conductor size of tubular bus and stranded conductors shall also be sized considering short circuit conditions, corona / voltage gradient and effect of solar radiation.
15	Complete Switchyard shall be designed to withstand the Seismic acceleration as per relevant IS.
16	Submission of Guaranteed technical particulars, datasheets, GA drawings, O&M manuals of all the electrical equipment's/panels/boxes, structures, towers, beams, cables, cable trays, other accessories such as insulators of all types, clamps, connectors etc.
17	The following design calculations shall be provided for BHEL for review during detailed engineering of the switchyard. • Sag tension calculation • Earthing calculation • Lightning protection system calculation • SC forces for sizing conductor • Bus bar sizing calculation • Short circuit forces on support insulators • Design calculation for spacer Span • CTs, PTs, CVTs burden calculation • Relays settings calculations 220V DC Battery sizing calculation supported with DBR.

4.2 Interconnection between solar plant to 220KV Switchyard/ control room including OFC cabling

Distance: 1000m approx.

4.2.1 BHEL scope

	Scope description	Quantity
1	Supply of OFC cables along with termination accessories and HDPE pipe for interconnection between solar plant and 220KV Switchyard control room will be supplied by BHEL.	1 No
2	Construction of 20 MW solar power plant till 33KV Main pooling Switchgear installation	1 set
3	SCADA system supply	1 set

4.2.2 Vendor scope

Interconnection between 33 KV Main pooling station at Solar PV Plant and Power Transformer at NTPC Switchyard shall be partly cable laying (underground), partly cable laying in air in RCC cable trench/ on cable tray and partly 33KV transmission line. The distance between Main pooling station and power transformer is 1 KM approximately. All design, supply, installation including civil and fabrication works required for Interconnection between SPV power plant Main pooling station to switchyard bay and extension further to 33 KV side of Power transformer at 220 KV substation will be in vendor's scope. There shall be multiple crossings of road, existing control cable trench, drain, Switchyard fencing. Part of cable trench route is within existing switchyard and part of the

cable trench route is narrow space between fence/RCC trench/ Drain. Vendor shall submit the interconnection methodology for BHEL/ NTPC approval prior to start of the work. Any other item and works, if required for statutory clearance by CEA/ CEIG for 33KV interconnection between Main pooling switchgear and power transformer shall be in scope of vendor. STU/ All items e.g. 33KV cable, cable termination kit on both ends, cable jointing kit, cable support structure, cable trays, Isolator, Insulators, Pole, BPI, 30 KV LA, LA equipment structure, cable route markers, hume pipes for crossings, cutting and repair works for fencing/drain/road/ control cable trenches etc including all civil works will be in scope of vendor.

OFC cables will be laid and terminated between solar plant main control room and Switchyard control room for interconnection. Cable supply and termination accessories will be BHEL scope. Laying and termination of cables will be in scope of vendor.

Conducting of detailed route survey is in Vendor scope. Based on the route study, Cables/ ACSR/ OFC shall be laid suitably (underground in trenches and over cable trays/ in RCC trench with required steel structural supports (Corrosion resistance treated) and 33KV Transmission line as applicable). The methodology will be submitted to BHEL/NTPC for approval.

(a) Installation, testing and commissioning as per relevant standards, Indian electricity rules (1956), CBIP, GETCO/ DISCOM/ CEIG/GEDA regulations etc. and as shall be approved by BHEL/NTPC/GETCO

(b) Design, drawings, guaranteed technical particulars, quality plan, manuals

Vendor shall submit the required documents for BHEL/NTPC approval within 7 days after receipt of purchase order or at every stage of project execution as applicable and as mutually agreed with BHEL/NTPC

1. Route survey for Interconnection from Solar plant to 220KV Switchyard/ Existing NTPC Switchyard control room
2. Supply items GA, GTP, QP as applicable
3. Civil design documents

4.3 Pre-commissioning / commissioning / State, CEIG clearances / Liaison etc

#	Scope description
1	Pre-commissioning inspections / checks / tests, MRT tests and coordination / liaison activities with state / central departments / GETCO/ DISCOM/ CEIG / CEA / SLDC etc for necessary approvals / clearances for commissioning, synchronization with grid and post-commissioning operation of the plant. (Clearances shall include obtaining prior approvals for all applicable drawings / documents etc from concerned state / central departments / GETCO / DISCOM/ CEA / CEIG etc.) A Basic checks A1 Tightness checks: 1) Terminations of HT(33kV)/LT/Control cables at 33/220kV transformer, C&R panels, ABT-TEM metering panels, marshalling boxes, bay marshalling kiosks, motor/ control boxes etc 2) ACSR conductor terminations 3) Fasteners of all the switchyard structures: bolts/nuts/washers 4) Fasteners at earthing chambers: bolts/nuts/washers

	A2	Electrical continuity checks
	A3	Cable megger checks: All LT cables
	A4	IR test and Hi Pot test on 33 KV cable
	A5	AC/DC power supply checks at all electrical equipments/ panels/ DBs
	A6	Check ground connections for quality of weld and application of zinc rich paint over weld joint of galvanized surfaces.
	A7	All checks and tests specified by the manufactures in their drawings and manuals as well as all tests specified in the relevant code of erection.
	A8	Pressure test on all pneumatic lines at 1.5 times the rated pressure shall be conducted.
B	Pre-commissioning electrical tests:	
	B1	33/220kV transformer
		1. Oil filtration: Equipment of adequate evacuation/ heating/ oil circulation capacity shall be deployed at site for this purpose. Filtration shall be carried out adequately in order to achieve the BDV, ppm, tan delta values within the limits as per relevant standards and as measured by NABL accredited laboratory. The machine shall have built-on BDV measuring set up for in-situ checking of BDV during filtration process. 2. IR tests LV-HV, HV-E, LV-E 3. Vector group 4. Voltage ratio 5. Magnetizing current 6. Magnetic balance 7. Winding resistance at all taps 8. Capacitance, tan delta of HV/LV bushings 9. Fault simulation checks from C&R panel: Buchholz, OTI, WTI, PRV, LOLA, REF etc
	B2	Outdoor CT
		1) IR tests (all cores): Pri-Sec, Sec-Sec, Pri-E, Sec-E 2) Ratio tests / primary injection 3) Ratio identification test-checking of all ratios on all cores by primary injection of current. 4) Dielectric test of oil (wherever applicable). 5) Magnetizing characteristics test. 6) Capacitance and tan delta measurement at minimum 10kV.
	B3	Outdoor PT/CVT
		1) IR tests (all cores): Pri-Sec, Sec-Sec, Pri-E, Sec-E 2) Voltage ratio test 3) Polarity test 4) Dielectric test of oil (if applicable). 5) Capacitance and tan delta measurement at minimum 10kV.
	B4	SF6 breaker
		1) IR tests of each pole 2) Contact resistance measurement (CRM) 3) Timing test: close/ open/ close-open 4) Slow and power closing operation and opening 5) Functional checks: breaker open/close, control circuits, interlocks, tripping through protective relays, spring-charged motor 6) Functional checking of compressed air plant and all accessories 7) Trip free and anti pumping operation

				8) Minimum pick up volts of coils 9) Insulation resistance of control circuits, motor etc 10) Resistance of closing and tripping coils 11) Remote operation from C&R panel: open/close, command/status, lamp indications 12) Check adjustments, if any, suggested by manufacturer
			B5	GOS isolator / Earth switch
				IR tests of each pole Contact resistance measurement (CRM) Functional checks: open/close manual, open/close motorized operation Manual and electrical operation on interlocks Insulation resistance of control circuits and motors. Ground connections Proper alignment to minimise the vibration to the extreme possible during operation. Measurement of operating torque for isolator and Earth switch Resistance of operating and interlocking coils.
			B6	Surge arrestor (LA)
				1) IR tests 2) Grading leakage current. 3) Resistance of ground connection. 4) Resistive current drawn at rated voltage after energisation.
			B7	Phasing Out
				The phasing out of all supplies in the station system shall be carried out.
			B8	Bus post insulator
				IR tests
			B9	Neutral CT for transformer
				IR tests
			B10	Numerical relays at C&R panel
				1. Relay calibration using applicable kit/ software 2. Overcurrent/ earth fault pickup/ tripping time tests
			B11	Earth resistance measurements for all chambers
				1. With electrode connected to grid 2. Without connecting electrode to grid 3. Check soil resistivity 4. Check continuity of grid wires 5. Check for weld joint and application of zinc rich paint on galvanised surface. 6. Dip test on earth conductor prior to use
			B12	Conductor Stringing and Power Connectors
				1) Line megger test 2) Physical check for finish 3) Electrical clearance check 4) Testing of torque by torque by torque wrenches on all bus power connectors and other accessories 5) Sag and tension check on conductors.

C	Testing agency		
		Credentials of testing agency to be submitted to BHEL for approval prior to awarding of work.	
D	Coordination and Liaison activities to be carried out by vendor:		
		1. Vendor shall prepare and submit the drawings/ schemes/ layouts/ calculations (earth mat etc) to the concerned state/central agency GETCO/ DISCOM/ CEIG/ CEA etc for their approval after clearance from BHEL. 2. Submission of site test reports to customer (NTPC/CEA/CEIG etc) after obtaining approval from BHEL. 3. Preparation of application (along with supporting documents: drawings, factory test reports, site test reports etc) to concerned agency (CEIG/CEA etc) for site inspection, obtaining signatures from customer (NTPC) and submission to the inspection agency. 4. Coordination with customer (NTPC) and liaison with inspection agency (CEIG/CEA etc) for inviting the inspectors for site inspection prior to plant commissioning. 5. Vendor shall organize inspection at site by above agency with all suitable technical and commercial arrangements. All necessary testing kits/ instruments shall be arranged as per the requirements of inspection agency. Basic instruments such as digital multimeter, 5kV digital megger, earth resistance meter etc shall be organized at site at the time of inspection. Competent electrical technical shall also be made available at the site. 6. Subsequent to site inspection, vendor shall follow-up with the inspection agency, coordinate with the customer to obtain early clearance for plant commissioning. 7. Vendor shall implement all the observations of CEA/ CEIG so as to secure their final approval that is mandatory to continue with regular operation of the plant. **Notes:** 1. Vendor shall take frontline lead in obtaining the clearance of inspection agency. 2. Vendor shall suitably interact with the contractors of BHEL executing the other portions of solar plant (from solar array up to 33kV side of solar plant) and mobilize all necessary inputs/ documents required from them in the process of getting approval of the inspecting agency for commissioning. 3. Scope of coordinating with concerned state/central electricity departments, GETCO/ DISCOM/ CEIG/ CEA etc to get their clearances / approvals for licensed/ statutory operation of the power plant on a continuous basis includes all transactions required for successful liaison and clearances. Application fees and renewal fees (say, in the form of DD/ web-based online payment) to be enclosed with application/ renewal documents shall be in the scope of BHEL/NTPC. All other expenses in the above process shall be in the scope of vendor.	

				Statutory Approvals shall also include: Obtaining statutory approvals /clearances/ compliances on behalf of the Employer from various Government Departments, not limited to, the following: - • Pollution control board clearance, if required • Mining Department, if required • Forest Department, if required • All other approval as and when, as necessary for setting up of a solar power plant including CEIG/ CEA, connectivity, power evacuation etc. as per the suggested guidelines -All other statutory approvals and permissions and their respective compliances, not mentioned specifically but are required to carry out hassle free Construction of the plant. -The Contractor shall comply with the provision of all relevant acts of Central or State.
	E	Commissioning of power plant		
				1) Vendor shall organize all necessary tools/ measuring instruments required to operate the various electrical equipments on 220kV side of power plant at the time of commissioning. 2) It is the responsibility of the vendor to interact technically with the substation for successful charging of 220kV grid line followed by charging of 33/220kV transformer. 3) Vendor shall suitably interact with the contractors of BHEL executing the other portions of solar plant (from solar array up to 33kV side) to enable successful grid synchronization of inverters. 4) Vendor shall participate actively in the commissioning until it is established that there is successful flow of power through the 220kV portion of power plant following the synchronization of inverters with grid. 5) Vendor shall deploy competent technicians at site to effectively interact with the substation on every technical aspect so as to ensure resolution of any technical problems related to grid encountered during commissioning.

4.5 General conditions applicable during supply, installation and commissioning phase

1	Vendor shall arrange for safe storage of all the vendor/BHEL supplied materials. For this purpose, vendor shall construct appropriate storage shed with gates, locks and keys. Security watch and ward shall be deployed round the clock. Insurance of the vendor-supplied items shall be in vendor scope until the end of trial run following the commissioning of the power plant.
2	Vendor shall organize power supply on their own. Accordingly, DG sets of suitable capacity shall be deployed by the vendor for construction works.
3	Similarly, water required for construction works shall be organized by vendor.
4	All machinery such as cranes, hydra, JCBs, forklifts, transport trucks, trolleys etc necessary for movement and installation of materials / panels / equipment etc shall be organized by the vendor.

5	All necessary tools and tackles such as crimping tool, screw driver set, power screw drivers, cutting pliers, nose pliers, spanner sets, adjustable spanners, hole saw cutter set, bending tools, torque wrenches, hack saw blades, pipe wrenches, flat / round files, HV termination tools, drilling machines, welding machines, concrete mixers, steel bar bending tools / templates for RCC works, spade, shovel, hammer etc shall be organized by the vendor.
6	All necessary measuring instruments such as digital multimeter, electrical testers, digital meggers (1kV, 2.5kV, 5kV) with feature to display, earth resistance meters, weighing machines, water level indicators etc shall be organized by the vendor.
7	Vendor shall make their own arrangements for necessary food, drinking water and accommodation for their labour and employees posted at the site. Similarly, food and drinking water required at the site, during the construction operations, shall also be in scope of vendor.
8	Vendor shall organize all necessary steps to meet statutory requirements such as labour license, PF, ESI etc and also ensure compliance with relevant acts such as minimum wages act, income tax act, employee insurance act etc for their labour deployed at site.
9	Vendor shall maintain updated labour register, with name, age, qualification, salary, attendance details etc at the site.
10	Vendor shall use danger boards, appropriate warning/sign boards, wherever required, to ensure safety of the persons during the work at site.
11	Vendor shall adhere to all necessary safety norms such as use of helmet, goggles, hand gloves, gumboots, aprons etc. It is the ultimate responsibility of the vendor in all respect to prevent accidents at the site and safeguard their labour from accidents.
12	Vendor shall, at the completion of every work, clear off the debris, which resulted out of the work. In case of excavation work such as cable trench etc, vendor shall finish the land neatly with necessary leveling, rolling etc.
13	Vendor shall carry out the work without causing inconvenience to other contractors of BHEL at site. In case of conflicts with other contractors, it is the responsibility of the vendor to ensure that the matter is resolved at once amicably so that the progress of work is not affected.
14	Any damages on the building, structures etc attributable to the acts of labour / employees of vendor shall be rectified and made good by the vendor at their own cost.
15	No child labour shall be employed for execution of the present contract.
16	Any miscellaneous materials, which are found essential for technical completion of the contract but not mentioned explicitly in this specification, shall be deemed to be included in the specification. Accordingly, such materials shall be included by the vendor as part of the offer.
17	BHEL/NTPC shall witness routine/ acceptance/ type tests performed at manufacturer works for the items supplied by vendor. Vendor shall accordingly provide inspection call to BHEL with submission of internal test results in advance. For the items bought out from dealers, test certificates, as per relevant IS / IEC standards, as issued by manufacturer shall be submitted to BHEL. However, prior approval shall be obtained from BHEL/NTPC for procurement of the item from dealers.
18	Field Quality Plan / Quality control system Vendor shall set up a field quality control laboratory with full set up to facilitate testing of all civil construction materials in accordance with FQP (Field quality control plan) that shall be submitted to BHEL for approval by BHEL/NTPC. Similarly, FQP for electrical works in respect of switchyards / transmission tower line shall also be submitted to BHEL. Vendor shall deploy a well experienced quality control engineer to monitor all QC activities at site as per approved FQP. Specifically, with reference to civil works, vendor shall submit all concrete mix designs and bituminous mix designs for BHEL/NTPC approval before starting of work. All the third

	party testing should be conducted in laboratories approved by BHEL/NTPC for which relevant details shall be submitted to BHEL prior to taking up work with the laboratory.
19	Any deviations shall be discussed with BHEL/NTPC site engineers and implementation shall be taken up only after approval from BHEL/NTPC.
20	Vendor shall submit periodic status report, on daily as well as weekly consolidated basis, to BHEL on the progress of the contract.

The Contractor shall comply with the provision of all relevant Acts of Central or State Governments including payment of Wages Act 1936, Minimum Wages Act 1948, Employer's Liability Act 1938, Workmen's Compensation Act 1923, Industrial Dispute Act 1947, Maturity Benefit Act 1961, Employees State Insurance Act 1948, Contract Labor (Regulations & Abolishment) Act 1970 or any modification thereof or any other law relating whereto and rules made there under from time to time.

5.0 TECHNICAL DATA

5.1 SCOPE AND GENERAL INFORMATION

5.1.1. This specification intends to cover the following activities, services and works in respect of Interconnection with existing 220 kV switchyard (220 KV bay construction in existing 220KV switchyard is in scope of vendor) & execution of 33kV Interconnection (approx. 1 KM distance) from Main pooling switchgear at Solar plant to 220KV NTPC Substation at Gandhar Gas Power Project situated in the state of Gujarat, India. The brief scope is as mentioned below-

a) Complete design and engineering of all the systems, sub-systems, equipment, material and services including civil/ electrical/ mechanical designs. AC SLD is attached for reference.
b) Providing engineering data, drawings and O&M manuals for BHEL/NTPC review, approval and records.
c) Manufacturing, supply, testing, packing, transportation from the manufacturer's work to the site.
d) Receipt, storage, security, preservation and conservation of equipment at the site.
e) Fabrication, pre-assembly (if any), erection, testing and putting into satisfactory operation of all the equipment/material including successful commissioning.
f) Furnishing of spares.
g) Satisfactory completion of the system

5.1.2 The Bidder shall be responsible for providing all material, equipment and services specified or otherwise which are required to fulfill the intent of ensuring operability, maintainability and the reliability of the complete work covered under this specification. The systems, sub-systems and equipment shall conform in all respect to high standards of engineering, design and workmanship, and shall be capable of performing in continuous commercial operation.

5.1.3 The 220 kV Switchyard shall be with Double Main Bus & Transfer Switching Scheme as indicated in AC SLD. The scope of work shall comprise, but not limited to the design, engineering, manufacture, testing and inspection at manufacturer's works, packing, supply, transportation, transit insurance, delivery to site, unloading, storage and equipment erection, associated structural works. Further, it shall include cabling, lighting, lightning protection, earthing, association of sub vendors if any in the erection, supervision, site testing, inspection and commissioning of 220 kV Switchyard & Interconnection work.
I) 220 kV Bay details : Execution of Solar bay at Existing 220 kV Switchyard
- One no. of 33/220 kV Tie-Transformer bay

II) 33 kV Interconnection work-
Interconnection between 33 KV Main pooling station at Solar PV Plant and Power Transformer at NTPC Switchyard shall be partly cable laying (underground), partly cable laying in air in RCC cable trench/ on cable tray and partly 33KV transmission line. The distance between Main pooling station and power transformer is 1 KM approximately. All design, supply, installation including civil works required for Interconnection between SPV power plant Main pooling station to switchyard bay and extension further to 33 KV side of Power transformer at 220 KV substation will be in vendor's scope. There shall be multiple crossings of road, existing control cable trench, drain, Switchyard fencing. Part of cable trench route is within existing switchyard and part of the cable trench route is narrow space between fence/RCC trench/ Drain. Vendor shall submit the interconnection methodology for BHEL/ NTPC approval prior to start of the work. All items e.g. 33KV cable, cable termination kit on both ends, cable jointing kit, cable support structure, cable trays, Isolator, Insulators, Pole, BPI, 30 KV LA, LA equipment structure, cable route markers, hume pipes for crossings, cutting and repair works for fencing/drain/road/ control cable trenches etc including all civil works will be in scope of vendor.
DC power will be extended from NTPC's existing switchyard control room to Main control room in Solar plant through Copper cable. Vendor shall supply, lay and terminate the cable at both ends. Vendor shall supply and install suitable DB for extending DC supply from existing source to switchyard items and for solar plant. All item like cables, DBs, termination hardware and accessories for the same will be in scope of vendor.
OFC cables will be laid and terminated between solar plant main control room and Switchyard control room for interconnection. Cable supply and termination accessories will be BHEL scope. Laying and termination of cables will be in scope of vendor.
Interconnection between 33 KV Main pooling station at Solar PV Plant and Power Transformer at NTPC Switchyard shall be partly cable laying (underground), partly cable laying in air in RCC cable trench/ on cable tray and partly 33KV transmission line. OFC cables will be laid and terminated between solar plant main control room and Switchyard control room for interconnection. Cable supply and termination accessories will be BHEL scope. Laying and termination of cables will be in scope of vendor.

5.1.4 This scope covers all the work required for mobilization of necessary equipment/ machinery, providing necessary engineering supervision and technical personnel, preparations for the type of foundations and the safe bearing capacity for different sizes of foundations for 220 bay.

5.1.5 The equipment and materials to be supplied by the Contractor shall form a complete 220 kV switchyard bay & Interconnection work including terminations on both ends. The equipment and services as detailed in all sections of the specification and as shown on the tender drawings shall be within the scope of supply of the Contractor.

5.1.6 The following is the list of items under the scope of contractor. However any items though not specifically mentioned but which are required to make the 220 kV switchyard & 33 kV cabling work complete in all respects for its safe, efficient, reliable and trouble free operation shall be supplied and erected by the Contractor, unless they are specifically excluded in the text of exclusions given elsewhere.
220 kV Switchyard :
- 220kV equipment: Circuit Breakers, Isolators (with and without earth switches), Current Transformers, Surge arresters, Bus post insulators, Capacitor voltage transformers, Control and Relay panel, SAS, TEM and ABT meters with metering panel.
- Extension of Existing High pressure water spray system for Power Transformer fire protection
- 220kV Switchyard materials:
    - 4" EHIPS Aluminum tube
    - ACSR 'Moose' Conductor

- 10.98 dia G.S. Earthwire
- Insulator, Insulator string and hardware
- Clamps, connectors and spacers
- Bay Marshalling kiosks

- Complete earthing grid (inclusive of supply of 40mm dia MS rod and GI flat) earthing of all switchyard equipment and its connection to existing earthing grid.
- Direct Stroke Lightning Protection of 220 kV switchyard either through LM or through Shield wire based on detail engineering as applicable.
- Armoured Power, Control and Screen cables, cabling (including interpole and interpanel), Cabling between Contractor supplied equipment and BHEL supplied/ Existing equipment (Existing LT switchgear, DCDB etc.)
- Armoured Power, Control cables, optical fibre cable, screen cable and Cabling among Contractor supplied equipment and BHEL supplied/ Existing equipment
- Cable support angles & accessories necessary for cable erection and any other items such as glands, lugs, clamps for cables, ferrules, cable ties, hume pipe etc. cable route markers for buried cable trench are also included in the scope.
- Power & Control cable schedule & termination schedules, optical fibre cable & screened cable shall be prepared by the Contractor.
- Outdoor lighting system for 220 kV switchyards.
- BCU and BPU for all the bays including Disturbance Recorder. Standalone Event logger and Time synchronizing equipment for bays under present scope and owners use as well.
- Modification in the existing control and protection scheme including supply of hardware/ software for integration of bays under present scope with the existing system like bus bar protection, islanding system etc.
- Interfacing with the existing RTU for extending the data from bays under present scope to RLDC.
- Relay setting calculations shall be prepared by the Contractor and approved by BHEL/NTPC
- Supply, erection, commissioning of Automatic start/ stop type centrifugal pump for sump pit.

33 kV Interconnection from Main pooling switchgear in Solar plant to 220KV NTPC Substation:

- All items and accessories in vendor's scope except for OFC cable as detailed in clause 4.2.
- All works including civil and fabrication works in scope of vendor.

5.1.7 SERVICES AND ITEMS

The scope also include but not limited to the following services/items described herein and elsewhere in specification:

a) System design and engineering
b) Supply of equipment and material
c) Structural works
d) Erection works
e) Project management and site supervision
f) Testing and commissioning
g) Interface coordination
h) Performance testing
i) Clearance from statutory authority. Owner shall provide support for this activity.

5.1.8 System Design and Engineering

a) The Contractor shall be responsible for detailed design and engineering of overall system, sub-systems, elements, system facilities, equipments, auxiliary services, etc. It shall include proper definition and execution of all interfaces with systems, equipment, material and services of NTPC for proper and correct design, performance and operation of the project.

b) Contractor shall provide complete engineering data, drawings, reports, manuals, etc. for BHEL/NTPC review, approval and records.
c) The scope shall also include the design and engineering as per details elaborated elsewhere in this specification.
d) For all structural works, the Contractor shall prepare design and fabrication drawings. Similarly for civil works, the detailed construction drawings shall be prepared for those items whose design is to be done by the Contractor.

5.1.9 Supply of Equipment and Material
a) The Contractor shall be responsible for design, engineering, manufacture, testing, inspection at manufacturer's works, supply, transportation, delivery at site, unloading, storage, in plant transportation at site, complete erection & supervision, site testing & inspection, and successful commissioning of all the equipment and material as detailed elsewhere in specification and as shown on the tender drawings. Any item though not specifically mentioned, but is required to complete the project works in all respects for its safe, reliable, efficient and trouble free operation shall be supplied and erected by the Contractor unless it is explicitly excluded as given elsewhere in the chapter.
b) All consumables, wastages and damages shall be to the account of Contractor.

5.1.10 Structural Works
The scope of structural works shall include design, engineering & construction of all structural works including supply of all materials complete for all equipments, gantry structures and associated facilities for the Switchyard & 33KV cabling.
a) Detailed design criteria including basis of design shall be prepared by the Bidder based on various requirements specified elsewhere in the specifications. All the above documents shall be finalised after BHEL/NTPC's approval and the same shall form the basis of Detailed Engineering Work.
b) Structural works associated with switchyard gantry structure (Towers & Beams) and Lightning Mast including proto assembly and substructure as required complete.
c) Structural works associated with switchyard equipment supporting structures and cable sealing ends including proto assembly and substructure as required complete.
d) Installation of Control & protection panels etc. in Existing Switchyard control room building and all other related works complete as per system requirement.
e) Structural works of rails for movement of Transformers, arrangement for cabling etc. all complete.
f) Civil & Structural works associated with 33 kV cabling, Cable sealing ends
g) All necessary embedments, inserts, supporting structures, supporting members as per requirement. All cable tray supporting structures including angles/bends/insert plates etc. inside existing control room building are also in scope of bidder.
h) All pipe and cable supporting arrangement/structures, pipe and cable trenches etc.
j) Supply of all materials for the construction of structures / facilities in the switchyard extension area. Bidder has to make arrangements for supply of all materials.
k) Soil sterilization /anti-weed treatment
l) Foundation for Lighting Poles.
m) Any other facility / structure that would be required as per system requirements.
n) All protection measures to prevent any damage to the adjoining structures / facilities.
o) Scope of the Bidder shall also include supply and laying of 40mm dia MS Rods as earthing mat as per requirement.

5.1.11 All works relating to design, preparation of drawings including fabrication drawings, procurement of material, fabrication, proto assembly, mass fabrication, transportation to site, handling, storage and erection of all Towers & Beams, Lightning Mast and Equipment supporting

structures (both lattice type and pipe type) for the switchyard extension area as per design and drawings to be prepared by the Contractor and approved by the BHEL/NTPC. This shall also include all types of bolts, nuts, hangers, shackles, clamps, step bolts etc. and any other items those are required to complete the job.
The Contractor shall construct, erect and install all structures, equipments and material of switchyard extension area. He shall be responsible for provision of all labour, tools and plant, and supervisory staff for safe, reliable, proper and correct erection of project components.
The tools and plant shall include, but not limited to, special hoisting equipment, cranes, stringing equipment, slings, consumables and all other articles and supplies as required.
The Contractor shall ensure periodic cleaning of work sites and removal of all waste material, packing material, surplus earth and left-overs and their proper disposal.

5.1.12 Testing and Commissioning
a) The scope includes testing and commissioning of all equipment, subsystems and systems of the project and putting them into successful commercial operation. The scope shall include but not limited to the requirements given elsewhere in the specification.
b) The Contractor shall be responsible to provide all necessary testing and commissioning personnel, tools and plant, test equipment, etc.

5.1.13 **Interface Coordination**
a) The Contractor shall identify all interface issues with BHEL/NTPC and other agencies, and shall be responsible for such interfacing, coordination and exchange of all necessary information.
b) The Contractor shall submit all drawings for review and approval of BHEL/NTPC. Contractor shall list the detailed requirements of interface between Contractor's work and the material and services to be provided by BHEL/NTPC.

5.1.14 **SPARES**
All spares supplied under this specification shall be strictly interchangeable with the parts for which they are intended for replacement. The spares shall be treated and packed for long term storage in the climatic conditions prevailing at the site. Small items shall be packed in sealed transparent plastic covers with desiccant bags as necessary.
Each spare part shall be clearly marked and labeled on the outside of the packing together with the description when more than one spare part is packed in single case.
A general description of the contents shall be shown on outside of the case and detailed list enclosed. All cases, containers and other packages must be suitably marked and numbered for the purpose of identification.

5.1.15 DETAILED SCOPE OF WORK - ELECTRICAL
5.1.15.1 Contractor shall be responsible for design and engineering of overall system/station, and all elements, systems, sub-systems, facilities, equipments, material, etc. The Contractor shall submit design calculations, drawings, codes, codes of practices, construction drawings, etc. for BHEL/NTPC approval.
5.1.15.2 The basic design based on tender SLD shall include, but not limited to, the following:
a) Development of general arrangement.
b) Development of detailed layout (plan & section/elevation) drawings.
c) Protection and control philosophy and selection of protection, control and annunciation schemes.
d) Development of interlocking schemes.
e) Development of switchyard structure loading details.
f) Development of earthing system
g) Development of direct stroke lightning protection system.
h) Insulation coordination of the EHV equipment.

i) Calculation of static and dynamic force load, and selection of spacer spans and equipment terminal loading.
j) Development of clearance diagrams.
k) Lighting design, Lux level calculation and conduit wiring diagram.
l) Development of power & control cable laying and termination schedules.
m) Relay setting calculations.
n) Development of erection key diagram with bill of material.
o) Foundation design and construction drawings.
p) Development of cable trench layout and sections and construction drawings.
q) Effect of nearby conductors due to electric field adjoining building and providing shielding.

5.1.15.3 Contractor shall furnish detailed drawings for the various equipments covered in their scope for BHEL/NTPC approval. The equipment shall conform to type tests as per specification and applicable standards and reports of the same shall be furnished for approval.

5.1.15.4 Contractor shall furnish design calculations and construction drawings for all civil works showing details of pockets to be left in foundations and embedments to be provided in cable trenches.

Contractor shall furnish the schematics, general arrangement drawings, cable schedules, interconnection schedules, panel wiring diagrams, etc. for various control and relay panels for BHEL/NTPC approval. Contractor shall also furnish the recommended relay settings to be adopted.

5.1.15.5 The Contractor shall note that the list of standards specified elsewhere in this specification is not complete. Whenever necessary the list of standards shall be considered in conjunction with specification, IS & IEC. In case governing standards for the equipment is different from IS or IEC, the salient points shall be clearly brought out along with English language version of the same.

5.1.15.6 Exposed live parts shall be placed high enough above ground to meet the requirements of Indian Electricity Rules and other statutory codes. All responsibilities regarding co-ordination with Electrical Inspection Agencies and obtaining clearance certificate from them rests with the Contractor.

5.1.15.7 For 220kV switchyard, the Main buses (Bus I & II) shall be Quad ‘moose’ ACSR conductor & Transfer Bus shall be Twin moose ACSR conductor. The equipment interconnections shall be through 4” IPS Al. tube/Twin moose ACSR conductor. The spacing for Twin moose ACSR conductor shall be 450 mm. All the ‘T’ off connections shall be provided with a bye pass utilizing two PG clamps for each ‘T’ off. As far as possible the conductor shall pass without cut/joints unless otherwise necessary for planned shutdown/ maintenance.

All equipment shall be supplied with suitable terminal connectors. The terminal connector shall be well coordinated with the type/size of conductor and equipment to be connected. The conductor terminations for equipment shall be either rigid or expansion type suitable for 4” IPS Al. tube or horizontal or vertical take-off suitable for Quad/Twin moose ACSR conductor. The exact requirement & type of terminal clamps would be finalised by the Contractor in consultation with BHEL/NTPC based on layout requirement. The terminal pads shall preferably be capable of taking the required conductor span under normal, short circuit and meteorological conditions, without affecting the performance of the equipment.

5.1.15.8 The rigid busbars for equipment inter connections shall have rigid connections at one end and expansion /flexible at other end. The tubular Al .connections shall have not more than one joint per span. Since no wastages are permissible, the bidder shall workout the cut lengths of Aluminium tube based on the finalised layout, & dispatch the same to site without requiring BHEL/NTPC approval. Corona Bell shall be provided at the end of the rigid busbars. The connectors and clamps shall be rated same as `the connected equipments.

5.1.15.9 The minimum vertical distance from the bottom of the lowest porcelain part of the bushing, porcelain enclosures or supporting insulators to the bottom of the equipment base, where

it rests on the foundation pad shall be 2.55 meters The various minimum heights of the switchyard shall be as given below from plinth level:
(i) Gandhar Power station

Voltage level Eqpt./	1st Level Bus	2nd Level Bus	3rd Level Bus
220 kV	6000 mm	11700 mm	16200 mm

The peak of towers of 220 kV shall be 5000 mm.+ 2000mm spike
The indicative structure heights of equipment such as CT, CVT, LA, Isolator, BPI etc. for Gandhar has been mentioned in tender drawings, however, bidder to note that the total height of the equipment along with structure shall match with existing bay equipment height.
5.1.15.10 The Bay width (Beam Span) for 220kV Switchyard Gantry structures should be 18 m.
5.1.15.11 Circuit breakers shall be supplied with necessary interpole cabling, and its cost shall be included in the cost of equipment.
5.1.15.12 All equipment shall be suitable for hot line washing.
5.1.15.13 The Contractor shall cooperate in all respects and exchange the necessary technical data/ drawings with other agencies and Employer's other Contractors under intimation to Employer to ensure proper coordination and completion of work in time.
5.1.15.14 Short circuit force calculation shall be submitted by the bidder as per relevant IEC for flexible & rigid bus as applicable. This short circuit force shall be considered for designing of Tower, Girder and equipment structure and their foundation as applicable.
5.1.15.15 The sag tension, conductor spacing, short circuit forces, spacer location, conductor swing and clearances shall be carried out in accordance with IEC 60865 to achieve the specified clearances.
5.1.15.16 All overhead stringing shall be carried out by minimum double tension String insulator assembly.
5.1.15.17 All the cables used for the switchyard shall be armoured type, irrespective of whether they are laid in ground or air.
5.1.15.18 The towers and gantries shall be suitable for a normal conductor tension of minimum 1.5T/conductor in case of Quad moose ACSR conductor and 2T/conductor in case of Twin/Single moose ACSR conductor & Shield wire tension shall be min. 0.8T. The foundations and structures if required shall be designed accordingly.
5.1.15.19 In 220 kV switchyard per feeder one bay marshalling box (BMK) is to be provided. The duplicated power supplies for BMK shall be extended.
5.1.15.20 The space for placing CRP and other installations in on second (2nd) floor in the existing Switchyard Control Room Building. The control & protection panels shall be located in this building.
5.1.15.21 The Contractor shall lay the cables properly dressed and clearly identifiable along the control cable trench as there shall be other existing bay's cables running along the trench.
5.1.15.22 For earthing 50x6 mm GS flat shall be used in all cabinets, MOM boxes, panels and balance all other earthing such as all equipments, towers, LM, cable trenches etc shall be through 75x12mm GS Flat.
5.1.15.23 Two (2) nos. of suitable industrial socket and suitable power cable for oil filtration equipment for Transformers shall be provided for future use.
5.1.15.24 The illumination level shall be 20 lux in general and 50 lux on equipment boxes. Lighting Mast/Lightning Mast shall be used for mounting lighting fixtures for outdoor switchyard lighting. No lighting fixture shall be mounted on towers/gantries.
5.1.15.25 Voltage drop for sizing of power cables shall not be more than 6%. The connectors and clamps shall be rated same as the connected equipments.

5.2 Services to be performed by the equipment being supplied

All the equipment/materials covered in this specification shall perform all its function satisfactorily without undue strain, restrike etc. under normal operating voltage conditions.

5.3 Site Supervision of Equipments

The contractor shall ensure that, erection, testing and commissioning of Transformer, Circuit Breaker, Isolator, Instrument Transformer, Surge Arrestor, Substation Automation System, Control & Protection System & Protective relays is carried out under the supervision of manufacturer of respective equipment.

5.4 Clearances

The minimum clearances shall be as given below:

Clearance	220 KV	33 KV
Phase to earth clearance	2100 mm	320 mm
Phase to phase clearance	2100 mm	320 mm
Section clearance	5000 mm	3000 mm

The Contractor shall supply the structures suitable to meet the above clearances.

5.5 SYSTEM PARAMETERS

The system parameters shall be as under:

	220 KV	33 KV
Highest system voltage	245 KV rms	36 KV rms
Lightning Impulse voltage	±1050kVp	±170kVp
Power frequency withstand for 1 min. (rms)	460 KV rms	70 KV rms
Max. fault level (1 sec.)	40 kA	12.5 kA
Minimum creepage distance	8575 mm	1260 mm
Rated ambient temperature	50 deg C	50 deg C
System earthing	Effectively earthed	
Rated frequency	50 Hz	
Max. Radio Interference level at 156 kVfor 0.5 MHz to 2.0 MHz	1000 microvolt	

5.6 TYPE TEST REQUIREMENTS FOR EQUIPMENTS

5.6.1 All equipments to be supplied shall be of type tested design. During detail engineering, the contractor shall submit for BHEL/NTPC's approval the reports of all the type tests as listed in this specification and carried out not earlier than ten years prior to the date of techno –commercial bid opening. These reports should be for the test conducted on the equipment similar to those proposed to be supplied under this contract and the test(s) should have been either conducted at an independent laboratory or should have been witnessed by a Client.

5.6.2 However if contractor is not able to submit report of the type test(s) conducted within last ten years from the date of bid opening, or in the case of type test report(s) are not found to be meeting the specification requirements, the contractor shall conduct all such tests under this contract at no additional cost to the owner either at third party lab or in presence of client/ owners representative and submit the reports for approval.

5.6.3 All acceptance and routine tests as per the specification and relevant standards shall be carried out. Charges for these shall be deemed to be included in the equipment price.

5.7 RIV TESTS:

The RIV tests shall confirm to the requirements as per below:

5.7.1 **General**

Unless otherwise stipulated, all equipment together with its associated connectors where applicable shall be tested for measurement of radio interference voltage (RIV).

5.7.2 **Test Levels**

The test voltage levels for measurement of external RIV are listed under the relevant clauses of the specification.

5.7.3 **Test Methods for RIV:**

5.7.3.1 RIV tests shall be made according to measuring circuit as per International Special – committee on Radio Interference (CISPR) Publication 16 -1 (1993) Part – I. The measuring circuit shall preferably be tuned to frequency with 10 % of 0.5 MHz but other frequencies in the range of 0.5 MHZ to 2 MHz may be used, the measuring frequency being recorded. The result shall be in microvolts.

5.7.3.2 Alternatively, RIV tests shall be in accordance with NEMA standard Publication No. 107 – 1964 except otherwise noted herein.

5.7.3.3 In measurement of RIV temporary additional external corona shielding may be provided. In measurement of RIV only standard fittings of identical type supplied with the equipment and a simulation of the connections as used in the actual installation will be permitted in the vicinity within 3.5 meters of terminals.

5.7.3.4 Ambient noise shall be measured before and after each series of tests to ensure that there is no variation in ambient noise level. If variation is present, the lowest ambient noise level will form basis for the measurements. RIV levels shall be measured at increasing and decreasing voltages of 85%, 100%, 115% and 130% for the specified RIV test voltage for all equipment unless otherwise specified. The specified RIV test voltage for 220 KV is listed in the detailed specification together with maximum permissible RIV level in microvolts.

5.7.3.5 The metering instruments shall be as per CISPR recommendations or equivalent device so long as it has been used by other testing authorities.

5.7.3.6 The RIV measurement may be made with a noise meter. A calibration procedure of the frequency to which noise meter shall be tuned shall establish the ratio of voltage at the high voltage terminal to the voltage read by the noise meter.

5.8 **CIRCUIT BREAKER**

5.8.1 **GENERAL**

Circuit Breakers shall be outdoor type, comprising three identical single pole units, complete in all respects with all fittings and wiring. The circuit breakers and accessories shall conform to IEC-62271-100 or equivalent Indian Standard. The requirement of control switching is as clause 5.8.10 of this chapter.

5.8.2 **DUTY REQUIREMENTS**

5.8.2.1 Circuit breaker shall be totally restrike free(C-2 class) under all duty conditions and shall be capable of performing their duties without opening resistor. 220 kV Circuit Breaker shall meet M1 class of mechanical endurance requirements as per IEC. The circuit breaker shall meet the duty requirement of any type of fault or fault location and shall be suitable for line charging and dropping when used on 220 kV effectively grounded or ungrounded systems and perform make and break operations as per the stipulated duty cycles satisfactorily.

5.8.2.2 The circuit breaker shall be capable for breaking the steady & transient magnetizing current corresponding to 220/33 kV transformers upto 250MVA 3 phase rating. It shall be capable of breaking line charging currents as per IEC-62271-100 with a voltage factor of 1.4. The rated transient recovery voltage for terminal fault and short line faults shall be as per IEC:62271-100.

5.8.2.3 The Bidder may note that total break time of the breaker shall not be exceeded under any duty conditions specified such as with the combined variation of the trip coil voltage, pneumatic/hydraulic pressure and arc extinguishing medium pressure, etc. While furnishing the

proof of the total break time of complete circuit breaker, the Bidder may specifically bring out the effect of non-simultaneity between same pole and poles and show how it is covered in the guaranteed total break time. While furnishing particulars regarding the D.C. component of the circuit breaker, the Bidder shall note that IEC-62271-100 requires that this value should correspond to the guaranteed minimum opening time under any condition of operation.

5.8.3 **CONSTRUCTIONAL FEATURES**

5.8.3.1 All making and breaking contacts shall be sealed and free from atmospheric effect. In the event of leakage of extinguishing medium to a value, which cannot withstand the dielectric stresses specified in the open position, the contacts shall preferably self close. Main contacts shall be easily accessible for inspection and replacement. If there are no separately mounted arcing contacts, then the main contacts shall be easily accessible for inspection and replacement. Main contacts shall have ample area and contact pressure for carrying the rated current under all conditions. The interrupter sectional drawing showing the following conditions shall be furnished for information:

a) Close position
b) Arc initiation position
c) Full arcing position
d) Arc extinction position
e) Open position.

5.8.3.2 All the three poles of the breaker shall be linked together either electrically/ pneumatically or electro hydraulically.

5.8.3.3 Circuit breakers shall be provided with two (2) independent trip coils, suitable for trip circuit supervision. The trip circuit supervision relay would also be provided. Necessary terminals shall be provided in the central control cabinet of the circuit breaker.

5.8.4 **SULPHUR HEXAFLOURIDE (SF6) GAS CIRCUIT BREAKER**

5.8.4.1 Circuit breakers shall be single pressure type.

5.8.4.2 Each pole shall form an enclosure filled with SF6 gas independent of two other poles. Common monitoring of SF6 gas can be provided for the three poles of circuit breaker having a common drive. The interconnecting pipes in this case shall be such that the SF6 gas from one pole could be removed for maintenance purposes.

5.8.4.3 The SF6 gas density monitor shall be adequately temperature compensated to model the density changes due to variations in ambient temperature within the body of circuit breaker as a whole. It shall be possible to dismantle the monitor without removal of gas. Temperature compensated SF6 pressure gauge shall be provided which will be visible from ground level.

5.8.4.4 Sufficient SF6 gas shall be supplied to fill all the circuit breakers installed plus an additional 20% of the quantity as spare.

5.8.5 **OPERATING MECHANISM**

5.8.5.1 Circuit breaker shall be operated by pneumatic mechanism or electrically spring charged mechanism or electro-hydraulic mechanism or a combination of these. It shall be gang operated for 3-phase reclosing operation.

5.8.5.2 The pneumatically operated mechanism shall offer unit compressor with each circuit breaker with the breaker local air receivers having a capacity for two ‘CO’ operations of the breaker at the lowest pressure for reclose duty without refilling.

5.8.5.3 The Spring operated mechanism shall be complete with motor, opening spring & closing spring with limit switch for automatic charging and other necessary accessories to make the mechanism a complete operating unit. As long as power is available to the motor, a continuous sequence of closing and opening operations shall be possible. The motor shall have adequate thermal rating for this duty. After failure of power supply to the motor, one close-open operation shall be possible with the energy contained in the operating mechanism. Motor ratings shall be such that it requires not more than 30 seconds for fully charging the closing spring.

5.8.5.4 The hydraulic mechanism shall be suitable for at least two close open operations after failure of ac supply to the motor starting at pressure equal to lowest pressure of auto-reclose duty.

All hydraulic joints shall have no oil leakage under the site conditions and joints shall be tested at factory against oil leakage at a minimum of 1.5 times maximum working pressure.

5.8.6 **FITTINGS AND ACCESSORIES**

5.8.6.1 The insulators and terminal connectors shall conform to requirements stipulated elsewhere. All routine tests shall be conducted on the insulators as per relevant IEC.

5.8.6.2 UNIT COMPRESSED AIR SYSTEM

a) The unit compressed air system for each breaker shall be provided with compressed air piping, piping accessories, control and non-return valves, filters, coolers of adequate capacity, pressure reducing valves(if any), isolating valves, drain ports, etc. The air compressor shall be driven by automatically controlled motor. It shall be of air cooled type complete with preferably oil-less cylinder lubrication. The compressors or pumps shall be mounted within the operating mechanism housing or a separate weatherproof and dust-proof housing. Each compressor shall be equipped with a time totaliser.

b) The compressor size shall be such that it is capable of performing following operations satisfactorily:

i) Total running time of compressor not exceeding 45 minutes per day, considering 2% leakage and 2 CO-operations.

ii) Air charging time not exceeding 20 minutes after one CO operation of the breaker.

c) Air Receivers:

i) The capacity of receivers shall be sufficient for two (2) CO operations of the breaker.

ii) Air receiver shall be designed in accordance with the latest edition of the ASME Code for Pressure Vessel - Section VIII of BS:5179. A corrosion allowance of 3.0 mm shall be provided for shell and dished ends.

Receivers shall be hot dip galvanized.

d) Controls and Control Equipment:

i) The compressor control shall be of automatic start stop type initiated by pressure switches on the receiver. Supplementary manual control shall also be provided.

ii) All control equipment shall be housed in a totally enclosed cabinet. Pressure gauges and other indicating devices, control switches shall be mounted on the control cabinet.

iii) Facility to annunciate failure of power supply to the compressor control shall also be provided.

e) Compressed Air Piping, Valves and Fittings:

i) The flow capacity of all valves shall be at least 20% greater than the compressor capacity.

ii) The high pressure system shall be such that after one 0 - 0.3 Sec – CO operation, the breaker shall be capable of performing one CO operation within 3 minutes.

iii) All compressed air piping shall be bright annealed, seamless phosphorous Deoxidized Non-Arsenical Copper alloy or stainless steel pipe (C-106 of BS:2871).

5.8.7 **TESTS**

5.8.7.1 **TYPE TESTS**

Circuit breaker shall confirm to type tests as per IEC in accordance with the requirement stipulated under clause no. 5.5.

5.8.7.2 **Routine Tests**

Routine tests as per IEC-62271-100 on the complete breaker/ pole along with its own operating mechanism and pole column shall be performed on all circuit breakers.

5.8.7.3 **SITE TESTS**

All routine tests except power frequency voltage dry withstand test on breaker shall be repeated on the completely assembled breaker at site.

5.8.8 **PARAMETERS**

a) Type of circuit breaker- Outdoor SF6, single pressure, Live tank type

b) Rated frequency- 50 Hz

c) Number of poles- Three (3)

d) Rated operating duty cycle- O - 0.3 sec. - CO - 3min. – CO

e) Reclosing- Three phase high speed auto reclosing
f) Total closing time- Not more than 150 ms.
g) Maximum difference in the instants of closing/opening of contacts- As per IEC
h) Trip and closing coil voltage- 110/220V DC
i) Auxiliary contacts- As required plus 10 NO and 10 NC contacts per pole as spare. The contacts shall have continuous rating of 10A and breaking capacity of 2A with circuit time constant of minimum 20 millisecond at 220V DC.
j) Noise level- Maximum 140dB at 50m distance from base of circuit breaker
k) Rated terminal load- Adequate to withstand 100kg static load as well as wind, seismic and short circuit forces without impairing reliability or current carrying capacity.
l) Type of operating mechanism- Pneumatic/spring/hydraulic/or a combination of these
m) Rated ambient temp- 50 deg C
n) System neutral earthing- Effectively earthed
o) Support structure height- Adequate so that lowest part of support insulator of equipment is minimum 2550 mm from plinth level

5.8.9 **245 kV Class Circuit Breakers**

a) Rated voltage- 245kVrms
b) Rated continuous current- 2000 Amp (min.) at rated amb.
c) Rated short circuit breaking- 40kA with percentage of DC current at rated voltage component as per IEC corresponding to minimum opening time under operating conditions specified
d) Symmetrical interrupting- 40 kA rms Capability
e) Short time current carrying- 40 kA rms for One (1) second Capability
f) Short circuit making current- 100kAp Capability
g) Rated out-of-phase breaking- 10 kA rms
h) Rated line charging breaking- As per IEC Current (voltage factor of 1.4)
i) Rated small inductive current Switching capability with over voltage less than 2.3 pu - Corresponding to interrupting steady and transient magnetising current upto 500 MVA transformers
j) First pole to clear factor- 1.3
k) Maximum total break time under any duty condition for any current under limiting condition of voltage and pressure- 65ms
l) Rated one minute power frequency withstand voltage (Dry & Wet) between line terminals and ground 460 kV rms between terminals with CB open- 530 kV rms
m) Rated Insulation levels :
Full wave impulse withstand voltage (1.2/50 micro sec.)
between line terminals and ground ± 1050 kV peak
between terminals with CB open ± 1200 kV impulse on one terminal & other terminal earthed
n) Max. radio interference voltage for Frequency between 0.5 MHz and 2 MHz at 156 kV rms (Micro volts) both in open and closed position- 1000
o) Phase to phase spacing 4500 mm (other type tested spacing are also acceptable)

5.8.10 Requirement of Controlled Switching Device for 220KV Circuit Breaker

The circuit breaker with controlled switching as indicated in single line diagram shall meet the following requirement:
1. The Switching controlled Device shall be used to reduce increased over voltages, re-ignition between circuit breaker contacts that may be caused by normal switching of high voltage circuit breakers and hence optimize the stresses on circuit breaker while switching the circuit. The switching controlled device will be called device henceforth. The switching controlled device shall make suitable adjustments to the switching instants of Main/Tie breakers so as to optimise the switching behaviour of Generator transformers and Bus reactors. These switching controlled devices shall be installed in Main and Tie breakers of Generator transformers and Bus reactors.

The switching controlled device for Generator transformers shall be primarily used for charging of Generator transformers from the grid side and optimisation of switching behaviour.
2. The device shall be such that only switching commands (for operating purpose) are processed in the device. Open command triggered by protection on fault shall be forwarded directly to the breaker. In these cases switching instance is not controlled.
3. Circuit breaker should be able to be switched while switching controlled device is not in operation e.g. during maintenance work or power supply is not connected, a bypass shall be provided to the device. In these cases the switching commands will then be forwarded directly to the circuit breaker via this Bypass. The switching time will not be controlled with these switching operations.
4. The device shall meet the requirements of IEC-60255-4 Appendix 'E' class III regarding HF disturbance test, and fast transient test shall be as per IEC-61000 – 4 level III and insulation test as per 60255 – 27.
5. The device shall have functions for switching ON & OFF the circuit breakers.
6. The device shall get command to operate the breakers manually or through auto re-close relay at random. The controller shall be able to analyze the current and voltage waves available through the signals from secondaries of CTs & CVTs for the purpose of calculation of optimum moment of the switching the circuit breaker and issue command to circuit breaker to operate.
7. The device shall also have an adaptive control feature to consider the next operating time of the breaker in calculation of optimum time of issuing the switching command and optimize the switching behavior as necessary. In calculation of next operating time of the breaker the controller must consider all factors that may affect the operating time of the breaker.
8. The device should have display facility at the front for the settings and measured values.
9. The device shall have self monitoring facility.
10. The device shall be suitable for operation considering transient and dynamic state values of the current and voltage from the secondary of the CTs and CVTs.
11. During the switching operations, current and voltage waveforms and other parameters shall be recorded and saved together with calculated values. The control switching device provided shall be networked to an Engineering work station (EWS) located in the switchyard control room. It shall be possible to extract the switching oscillographic records and also to do CSD parameterization from this EWS. All necessary software & hardware shall be in bidder's scope. Alternatively, a laptop shall be supplied to facilitate downloading of oscillographic records and CSD parameterization locally.
12. It shall have self monitoring facilities. Faults which impair the functioning of the device or peripheral components, failure of trip voltage or sensors shall be displayed visually and shall give alarm.
13. The device shall be designed to operate correctly and satisfactorily with the excursion of auxiliary A/C & DC voltages and frequency as specified elsewhere in the specification.
14. The device shall have time setting resolution of 0.1 ms or better
15. The device shall have sufficient number of output/input potential free contacts for connecting the monitoring equipment and annunciation system available in the control room. Necessary details shall be worked out during engineering the scheme.
16. Supply of all the necessary accessories required for the successful operation of controlled switching device shall be in the scope of supplier of the device.

5.9 CONTROL AND PROTECTION

5.9.1 GENERAL REQUIREMENTS FOR CONTROL AND PROTECTION

5.9.1.1 The Bidder's scope of work shall include the supply, delivery, installation, testing and commissioning of control, metering and protection system for 33/220kV Transformer bay, integration of new 220kV bay to Bus Bar protection of existing 220kV switchyard.
5.9.1.2 All associated power and control cabling shall be in the Bidder scope.

5.9.1.3 Interlocking to prevent unsafe operation of Switchyard equipment such as circuit breakers, isolators, earth switches etc. shall be implemented.

5.9.1.4 A portable engineering station (Laptop PC) with all the licensed software required for IED configuration, testing commissioning, DR & Event log downloading, Energy Meter & chartless recorder data downloading shall be provided.

5.9.1.5 Bay control and protection panels shall be placed at inside Switchyard control room. Bidder scope also includes all associated works required for the above purpose.

5.9.1.6 The communication protocol used for all devices including Bay Control Unit (BCU) and Bay Protection Units (BPU) shall be the IEC61850 protocol and BCU and BPUs shall be integrated into solar SCADA system.

5.9.2 OPERATIONAL REQUIREMENTS FOR NUMERICAL RELAYS AND AUXILIARY RELAYS

5.9.2.1 All protection relays to be supplied under this package shall be of Numerical type.

5.9.2.2 All numerical relays, auxiliary relays and devices shall be of latest version, reputed make and types proven for the application, satisfying requirement covered elsewhere and shall be subject to Owner's approval. Relays and timers shall have appropriate setting ranges, accuracy, resetting ratio, transient overreach and other characteristics to provide required sensitivity to the satisfaction of the Owner.

5.9.2.3 Numerical relays shall be suitable for efficient and reliable operation of the protection scheme. Necessary auxiliary relays, timers, trip relays, etc. required for complete scheme, interlocking, alarm, logging, etc. shall be provided. No control relay, which shall trip the circuit breaker when relay is de-energized, shall be employed in the circuits.

5.9.2.4 Relays shall be provided with self-reset contacts except for the trip lockout relays, which shall have manual reset facility.

5.9.2.5 Suitable measures shall be provided to ensure that transients present in CT & VT connections due to extraneous sources in EHV system do not cause damage to the numerical and other relays. CT saturation shall not cause mal-operation of numerical relays.

5.9.2.6 Except for event logging, alarm and annunciation type of non-trip functions, protective relay contact multiplier relay shall be high speed trip relay only.

5.9.2.7 Only DC/DC converters shall be provided in the solid state devices / numerical relays wherever necessary to provide a stable auxiliary supply for relay operation.

DC batteries in protective relays and timers necessary for relay operation shall not be acceptable. Equipment shall be protected against voltage spikes in auxiliary DC supply.

5.9.2.8 The internal clock of all the numerical relays being supplied under this package shall be synchronized through the GPS Time Synchronizing System.

5.9.2.9 All Protection Relays shall be provided with self-diagnosis and supervision functions to ensure maximum availability. An alarm contact shall be provided for hardware failures, failures of internal and external auxiliary supplies etc.

5.9.2.10 Each numerical relay shall have a serial interface on the front for local communication through PC. Further, all the numerical relays being supplied under this package shall have a rear communication port suitable for forming an engineering LAN(in future). Facilities shall be provided to access each discrete protection function including modification in the relay settings and monitoring of the relays through a portable engineering workstation. Necessary licensed software (latest version) for the above purpose shall be in the scope of the bidder. Display of various measured parameters during normal as well as fault condition on segregated phase basis shall be provided. Numerical relays shall also have LEDs and back lit LCD screen for visual indication and display of messages related to major trips / alarms generated in the relays. Necessary multilevel password protection shall be provided.

5.9.2.11 The sampling rate of analog inputs, the processing speed and processing cycle of digital values shall be selected so as to achieve the operating times of various protection functions specified. In case Bidder does not have all the protections specified, as a part of the standard

numerical relay, separate discreet numerical relays can be provided for such protection. The reasons for providing the same shall be clearly brought out in the bid.

5.9.2.12 All numerical relays shall be IEC61850 compliant.

5.9.2.13 The protection system shall be arranged to provide two independent, high performance and reliable systems with separate monitored DC supplies, separate CT/VT cores, separate cables and trip relays to obtain 100% redundancy.

Associated trip relays of the two systems shall be separate, having sufficient number of contacts for all the functions. Each protection shall energize both trip coils of the circuit breakers to be tripped.

5.9.2.14 The numerical relays shall be provided with built-in disturbance recorder to record the analogue form of instantaneous values of the current and voltage during faults and disturbances for the pre-fault and post-fault periods. The disturbance recorder shall have the facility to record the following external digital channel signals in addition to the digital signals pertaining to the differential relay itself: HV breaker (main and tie) status, LV breaker status, Buchholtz /On-load tap-changer, Buchholtz alarm/trip, Winding temperature/ Oil temperature/Pressure relief alarm/trip and other transformer mechanical protection signal.. The data from DR function shall be available in IEEE/COMTRADE format and compatible with the dynamic relay test system being supplied in this contract.

5.9.2.15 The manufacturer of the offered numerical protection system shall carry out complete engineering, testing & commissioning at site of the offered protections including the associated relay & protection panels.

5.9.2.16 The numerical relays offered shall have self-diagnostic features to reduce the down time of the relay and provide useful diagnostic information on detection of an internal fault to speed up the maintenance. Necessary support documentation explaining the self-diagnostic features of the numerical relays in detail shall be furnished for owner's use.

5.9.2.17 Pick up range of the Binary inputs shall be minimum 70 V DC /AC.

5.9.2.18 All the numerical relays shall have adequate processor capability to carry out programmable scheme logics (PSL) required for implementing approved protection and control schemes over and above its inbuilt protection functions algorithm. All numerical relays shall be supplied with all protection functions / features in disabled condition.

5.9.2.19 All the numerical relays shall have built in disturbance recording function. The built in DR function shall be used to record the graphic form of the instantaneous values of analog inputs such as voltages and currents in the case of a short circuit and a disturbance in the Power System. Fault/disturbance logs shall be clearly identified by Fault ID, Fault date and time (hour, minutes, seconds and ms). Time stampings on fault records shall be synchronized with a GPS clock. Shall have Scan rate of 1000 Hz or better for sampling each of the analog channels having a fundamental frequency of 50 HZ. The fault data from the Digital Fault Recording feature shall be available in IEEE / COMTRADE format.

5.9.3 PROTECTIONS FOR EHV SYSTEM

5.9.3.1 The general protection requirements for the 220 kV Transformer are indicated in the tender drawing for switchyard protection SLD.

5.9.3.2 The minimum fault current could be as low as 20% of the rated current. The characteristics shall be such as to provide satisfactory operation under such extremely varying conditions.

5.9.3.3 The protection and control equipment and circuitry, shall be arranged to provide two independent, high performance and reliable protection systems with separate DC supplies, separate CT/VT cores and separate cables and self reset (single phase) hand reset (three phase) trip relays to obtain 100% reliability. The DC supplies to these protections shall be monitored.

5.9.3.4 Associated trip relays of the two systems shall be separate having sufficient number of contacts for all the functions.

5.9.3.5 Each protection system shall energize both trip coils of the circuit breaker.

5.9.4 EHV CIRCUIT-BREAKER PROTECTION

Each 220kV circuit breaker being supplied under this package shall be provided with following protection functions:

5.9.4.1 **Numerical Local Breaker Back up Protection Function**: Duplicated LBB protection function shall be provided for each 220kV circuit breaker supplied under this package. The LBB function as a built-in function of Bay Protection unit is acceptable provided it meets all the requirements specified below. In addition, the LBB protection function shall meet following criteria:

- Be three pole type having three single phase units
- Shall operate for stuck breaker conditions
- Have an operating/resetting time each of less than 15 ms.
- The LBB function shall be initiated by external trip contacts from various protection functions and after a set time delay shall energize the trip bus in the bus bar protection scheme on which the stuck breaker is connected for tripping of all breakers connected to the particular bus. **In addition, an instantaneous repeat trip command from LBB shall be given to the primary breaker through two different self reset trip relays on different DC supply.** The interlocking between different relays to achieve the LBB functionality shall be achieved by hard-wired logic.
- Have a setting range of 5 to 80% of rated current
- Have a continuous thermal withstand of 2 times rated current irrespective of the setting.
- Have time delay feature with a continuously adjustable setting range of 0,1 to 1 s.
- Shall be an individual phase comprehensive scheme.
- Shall not operate during the single-phase auto-reclosing period.
- Shall provide end-fault protection that initiates a direct transfer trip to the remote end.

5.9.4.2 **Trip Coil Supervision:** A Trip Coil supervision function shall be provided for each lockout trip relay and each of the circuit-breaker trip coils. It shall incorporate both the pre-close and post-close supervision of trip coils and associated trip circuits. An audible alarm shall be given in the event of operation of trip coil supervision function. It shall have a time delay on drop-off of not less than 200ms. Trip coil supervision function as a built in feature of BPU is also acceptable provided it meets all the specified requirements.

5.9.4.3 **DC Supply Supervision**

5.9.4.4 **Pole Discrepancy Protection for each CB under this package.**

5.9.4.5 **High Speed Trip Relays** supplied under this package shall be:

- With operating time of less than 10ms.
- With reset time of less than 20ms.
- Provided with operation indicator for each element/coil.
- Have adequate contacts to meet the scheme requirements of trip, interlock, LBB, auto-reclose, DR, fault locator, etc.
- Hand reset or self reset, depending on the application. Further, the trip relays shall be provided with a feature to receive manual reset command from engineering workstation located in remote.

5.9.5 INTERFACE WITH EXISTING SYSTEM PROTECTION

5.9.5.1 The bidder shall provide all interfacing requirements with the existing 220 kV bus bar protection scheme.

5.9.5.2 The bidder shall provide the Busbar relay setting calculations and revised relay settings, if required on account of new bays getting added to the switchyard for Gandhar. AT Gandhar Project, All trip relays, multiplication relays, two nos of Busbar protection peripheral unit as per existing system, any other hardware, associated cabling required to achieve the interfacing of the new 220kV bays covered in this package with existing Busbar protection shall be under the bidder's scope.

5.9.5.3 Supply of ABT meter and necessary interface with the existing ABT metering network are in the scope of Bidder. All required hardware shall be provided by the bidder. ABT meter shall be similar to the existing ABT meters of other 220kV bays. AT Gandhar Project, For ABT meter integration purpose, Bidder shall provide the following hardware:

(a) MOXA convertor- 01 No.
(b) 16-port Ethernet switch-01 No.
(c) LAN Cable-200 meters
ABT meter data will be connected to plant SCADA as well.

5.9.6 INTERFACE WITH RLDC AND SOLAR SCADA SYSTEM

5.9.6.1 Necessary interface for extending status of circuit breaker, isolators, Trip relays, transformer tap position, MW/MVAR (4-20mA) data etc of new bays to RLDC through the existing RTU shall be in bidder's scope. Necessary contact multiplication relays, transducers, cable and cabling shall be in bidder's scope. Complete scope augmentation of existing RTU/interface system for sending data of 220kV Bay data as per regulatory requirements are in the Bidder scope.

5.9.6.2 Necessary interface with Solar SCADA system for extending status/alarm/trip signal of 220 bay equipments, protection and control panel, transformer including OLTC system & firefighting system, energy meter data etc of new bays to Solar SCADA system shall be in bidder's scope

5.9.7 TRANSFORMER PROTECTION

5.9.7.1 The Bay Protection Unit offered for each transformer should be such that it provides a comprehensive protection for the equipment for all types of faults and abnormal operating conditions.

5.9.7.2 The numerical relays, comprising the Bay Protection Unit, for transformer shall be configured into two protection groups operating on two separate DC supplies, such that one protection group shall always be available to detect and operate for any type of fault in the transformer, under condition of failure of other protection group or of associated DC supply of the other protection group.

5.9.7.3 The following protections shall be provided for 220/33 kV Transformer:
- 3 Winding Differential Protection (87T)
- Restricted E/F Protection (64T- HV & LV side)
- Directional Back up over current and E/F protection on HV and LV (67/67N)
- Back up over current and E/F protection on HV and LV (50/51/50N/51N)
- Back-up neutral E/F protection (51N)
- Over fluxing Protection (99T)
- Multiplication relays for the following : trip of Buchholtz /Pressure Relief Device / Sudden Pressure Relay and Fire protection etc

5.9.7.4 Should the protection functions specified for the transformer be available as a single discrete numerical relay, two such relays shall be supplied to meet the requirements of relevant clause above.

5.9.7.5 Differential , Back-up E/F in one channel and REF, Back-up O/C in another channel

5.9.7.6 Differential Protection shall:

(a) be of numerical type and shall have continuous self-monitoring and diagnostic features;

(b) be three-pole type, with faulty phase identification/indication. The operating time of the relay shall not be greater than 30ms at 5 times the setting.

(c) be stable for magnetizing inrush currents and shall be stable under normal over-fluxing conditions. Magnetizing inrush stability shall not be achieved through the use of an intentional time delay;

(d) have an internal feature in the relay to take care of the angle and ratio correction;

(e) have a disturbance recording feature to record the analogue form of instantaneous values of the current in all three windings (i.e. nine analog channels) during faults and disturbances for the pre-fault and post-fault periods. The disturbance recorder shall have the facility to record the following external digital channel signals in addition to the digital signals pertaining to the differential relay itself:
- HV breaker (main and transfer) status
- LV breaker status

- On-load tap-changer position
- Buchholtz alarm/trip
- Alarm/trip of transformer on winding temperature/oil temperature/ pressure relief

The necessary hardware and software for downloading the data captured by the disturbance recording function to portable engineering station shall be included in the scope.

5.9.7.7 Restricted Earth Fault Protection shall:

(a) be single-pole type;
(b) be of current/voltage operated high impedance type;
(c) have a suitable non-linear resistor to limit the peak voltage
(d) shall have setting range from 5-80%

5.9.7.8 Over fluxing Protection shall

(a) Operate on the principle of voltage to frequency ratio.
(b) Have inverse time characteristics compatible to transformer over fluxing withstand capability and also a separate high set feature.
(c) Provide an independent alarm with continuously adjustable time delay.
(d) Tripping time shall be governed by V/ F Vs time characteristic of the relay.
(e) Have a set of characteristics for various multiplier settings.
(f) Have a resetting ratio of 98% or better

5.9.7.9 Back-up Over current Protection with High-set Function (50/51)

(a) Shall be triple pole type
(b) Shall be of definite time characteristic & have built-in timer with suitable range
(c) Shall have a low transient, overreach high-set instantaneous unit
(d) Shall have an adjustable setting range for current and time setting
(e) Shall include hand-reset indication per phase.

5.9.7.10 Backup Earth Fault Protection (50N/51N)

(a) Shall be single pole type
(b) Shall be of definite time characteristic & have built-in timer with suitable range
(c) Shall have a low transient, overreach high-set instantaneous unit
(d) Shall have an adjustable setting range for current and time delay
(e) Shall include hand reset indication

5.9.7.11 Directional Back up Over Current and E/F Protection

(a) Shall have three over current and one earth fault element(s) which shall be either independent or composite unit(s) and shall have built-in timer with suitable range;
(b) shall be of numerical type;
(c) the scheme shall include the necessary VT fuse failure relays for alarm purposes;
(d) the over current function shall:

- have a low transient, overreach high-set instantaneous unit;
- include hand-reset indication.

(e) the earth fault function shall:

- have a low transient, over-reach high set instantaneous unit;
- include hand reset indication;
- Include the necessary separate interposing voltage transformers or have an internal feature in the relay for open delta voltage to the relay.

The ranges mentioned above are only indicative only and the final ranges shall be finalized during detailed engineering

5.9.8 CONTROL PANELS

IEC 61850 compliant Panel mounted bay control unit (BCU) based Control Panels shall be provided for 33/230kV transformer bay. Control Panels shall comprise minimum of the equipment as listed:

a) Bay Control Unit (one no).
b) Annunciation windows with test, accept and reset-push buttons.

5.9.8.1 **Bay Control Unit (One No.)**

The Bay Control Unit shall have following built-in functions:

i. Mimic control panel to display graphically the bay configuration, status of the plant, analogue measurands, alarms, and offer bay level control.

ii. Switching of Switchyard Bay Equipment depending on conditions such as interlocking, control mode, or external status condition. Adequate safety features like prevention of double operation, command supervision, block/deblock, over-riding the interlocking etc. shall be provided. All such security features shall be finalized and approved by Owner during detailed engineering.

iii. Status Supervision of switchyard equipment

iv. Interlocking Function to prevent unsafe operation of switchyard equipment such as circuit breakers, isolators, earth switches etc. Interlocking shall be implemented on bay level, by user-friendly, menu-driven configuration software within the BCU. The auxiliary contacts of each of the equipment shall be wired to the BCU for this purpose. An over-riding / bypass function for baylevel interlocking shall be provided at appropriate security level for maintenance or during emergency conditions. The interlocking logic shall be defined during the details engineering phase to prevent illegal operation.

v. Analogue Measurements for bay voltage (per phase), current (per phase), frequency, MW and MVAR, tap position / gas parameters / winding temperature of Transformers. These measurements shall not require the use of any intermediate transducers. The accuracy of measurement shall be 0.5% for voltage, current and frequency, and 1.0% for MW and MVAR. The measured and computed values shall be displayed locally on BCU.

vi. Event and Alarm Handling: BCUs shall acquire all the bay level alarms and events from field inputs with a resolution and time tagging of 1 milli sec and shall transfer these to Solar SCADA through SCADA LAN.

5.9.8.2 Annunciation System

The annunciation system shall be either relay based or based on state of the art static system of proven design. The annunciation facia shall be at least of 35mm x 50mm size for each point. The system shall have accept, reset and test facilities for alarms in each control panel. Annunciation alarm shall be provided for failure of annunciation dc supply by means of separate AC supply. No of annunciation windows per control panel shall be decided during detailed engineering.

5.9.8.3 Controlled Switching Device

Bidder to refer 220kV switchyard chapter for details specification and actual requirement for controlled switching device.

5.9.8.4 Any contact multiplication relays required to multiply the contacts of existing isolators, CBs, trip relays etc to be used in the scheme logics related to bays under present scope shall be provided by the bidder. Any cabling between the bidder's panels and existing control & relay panels for this purpose shall also be in bidder's scope. Any modification and associated cabling in existing scheme logics required due to addition of new bays in the existing switchyards shall also be in the bidder's scope. All such existing schemes shall be revised to show the modifications and submitted to NTPC for reference.

5.9.8.5 CONSTRUCTIONAL FEATURES

5.9.8.5.1 Panels:

a) Shall be free standing, floor mounting type and completely metal enclosed. Cable entries shall be from bottom.

b) Shall have removable gland plates with glands made of brass and suitable for armoured cables.

c) Panels shall be of IP 31 class or better.

d) Panels shall be painted. For panels to be located in the existing switchyard control room, the color of paint for exterior/interior of the panel and the dimensions of the panel shall be in line with that of the existing control/relay panels at site.

e) Relays/Energy meters shall be flush mounted on the front with connections at the rear; shall be draw out or plug-in type/modular case with proper testing facilities. Provision shall be made for easy isolation of trip circuits for testing and maintenance.

f) The dimensions of control / relay panel shall be matching with the existing panels at site, details of which shall be furnished during the detailed engineering.
g) Shall be supplied complete with interconnecting wiring between all devices mounted therein.
h) All equipment mounted on front and rear side of the panels shall have individual name plates with equipment designation engraved. Each panel shall also have circuit/feeder designation name plate.
i) Each panel shall be provided with a 240V AC fluorescent lighting fixture controlled by door switch as well as a 5A, 240V AC switch-socket unit.
j) Shall be provided with necessary arrangements for receiving, distributing, isolating and fusing of AC & DC supplies for various circuits for control, signaling, lighting, interlocking, etc. Selection of main and sub-circuit fuse rating shall ensure selective clearance of the sub-circuit faults.
k) Voltage circuits for protection and metering shall be protected by fuses. Suitable fuse failure relays shall be provided to give an alarm for voltage circuits of protection/metering. Voltage selection scheme based on relays shall be provided for meters wherever possible.
l) The DC supplies at the individual relay and protection panels shall be monitored by suitable relays and failure of DC supplies shall be annunciated.
m) Panels shall have a lockable front Plexiglas door and a swing frame. Panels shall facilitate direct access to any component mounted inside and shall have at least 20% free space for future expansion.
5.9.8.5.2 Earthing:
a) The panels shall be equipped with an earth bus of at least 50x6 mm2 galvanized steel flat or equivalent copper.
b) Earth buses of adjoining panels shall be connected for continuity. The continued earth bus so formed shall be connected to main earth grid at both ends.
c) All metallic cases of the mounted equipment shall be connected to the earth bus by 2.5mm2 copper wires.
d) One breach in such earthing shall not cause loss of earthing of any equipment.
e) CT/VT neutral secondary shall only be earthed at the terminal block of the panel through links, such that earthing of one group may be removed without disturbing others.
f) An independent Electronic Earth System shall be provided as per bidder's standard. The electronic earth shall be connected to the substation earth mat through a dedicated riser.
5.9.8.5.3 Control Supply:
a) Owner shall provide two set of DC and AC supply feeder panels for control and protection panel use. Necessary cabling including termination shall be in the scope of the Bidder.
5.9.8.5.4 Wiring
a) Internal wiring to be connected to external equipment shall terminate on terminal blocks.
b) The terminal blocks for CTs and VTs shall be provided with test links and isolating facilities. The CT terminal blocks shall be provided with short circuiting and earthing facilities.
c) Shall have 20% terminals as spare terminals in each panel.
d) All wiring shall be with 660V grade, single core, PVC insulated stranded copper conductor.
e) Wires shall be vermin proof. Minimum size of conductor shall be 1.5 sqmm in general, but for CT & VT circuits it shall be 2.5 mm2. Minimum number of strands shall be three. Contractor shall be solely responsible for completeness and correctness of all the wiring, and for proper functioning of the connected equipment.
5.9.8.5.5 Colour Mimic
Colour mimic diagram showing the exact representation of the system shall be provided in front of the control panel. Mimic colour shall be matching with that of the existing 220 kV control panels and the details shall be furnished by the Owner during detailed engineering.
5.9.8.5.6 Auxiliary Equipment
All control and instrumentation switches shall be rotary operated type with escutcheon plate showing the operating position and circuit designation. All switches shall be flush mounted. Handles of different shapes shall be provided as approved by Owner. Control switches for breaker

or disconnecting switch shall be of spring return to neutral type, while all other shall be stay-put type all the synchronizing switches shall have a removable common handle, removable only in off-position. Lockable type switches shall be provided for same application as specified by the Owner. The contact combination and their operation shall ensure completeness of the scheme function and interlock requirements. Contact ratings of the switches shall be as per relevant standards. Contacts shall be spring assisted and contact faces shall be made pure silver. Cluster type LED indicating lamps shall be provided.Position indicators for the earth switches of semaphore type shall be provided as specified in the mimic diagram. It shall be suitable for DC operation.

5.9.8.5.7 INDICATING INSTRUMENTS

a) Shall conform to IS: 1248

b) Shall be suitable for the instrument transformers as indicated in the drawings enclosed and shall be calibrated to read directly the primary quantities.

c) Shall be calibrated and adjusted at works and shall also be tested and calibrated at site before commissioning. All these instruments shall be flush mounted.

d) Shall be transducer operated, having 240 deg. scale and a dial of 96x96 mm2, have an accuracy of 1.5 class and resolution of at least 50% of accuracy class

e) Current coils shall be 120% of rated current and 10 times for 0.5 sec. without losing accuracy.

5.9.8.5.8 TRANSDUCERS

a) Shall conform to IEC: 688-1.

b) The output of the transducers shall be 4-20mA/0-10mA/10-0-10mA dc as necessary for the instruments.

c) Accuracy class shall be 0.5 or better except for frequency transducer, which shall have an accuracy of 0.2.

d) Summation transducer shall be suitable for taking multiple inputs from individual MW/MVAR transducers.

e) Shall have dual output. One output shall be used for the indicating instrument/recorder provided and other shall be wired up to terminal block of the panel for Owner's use in future.

f) Energy transducers shall be suitable for 3 phase, 4 wire connection.

5.9.9 CONTROL CABLING PHILOSOPHY

5.9.9.1 Each secondary core of each phase CT/CVT shall be brought to the equipment marshalling box through independent cables.

5.9.9.2 Each three phase secondary core of CT/CVT shall be brought to the associated control/relay panel from the equipment marshalling box through independent cables.

5.9.9.3 Duplicated cores with at least 4 mm2 equivalent core cross-sectional area per connection shall be used for connection of all CT/CVT circuits.

5.9.9.4 VT leads used for tariff metering shall have an equivalent core cross-sectional area of at least 10 mm2 per phase/neutral connection.

5.9.9.5 Duplicate channels of protection shall have independent cables for tripping, DC supply, etc. Duplicated cores shall be used for all closing/tripping commands and interlocking signals involving long cable lengths.

5.9.9.6 For the following applications multiple cores with at least 4 mm2 equivalent core cross - sectional area per connection shall be used.

a) DC supply to Bay Marshalling box

b) DC supply to circuit breaker cubicle

c) DC looping for closing and tripping circuits of circuit breaker

5.9.9.7 Any special cable required for hooking up 4-20 mA signals from yard to control room is in the scope of the bidder.

5.9.9.8 Spare cores shall be provided as per following norms,

Up to 3 core cable Nil

5 Core Cable Min. 1 core

7 to 14 core cable Min. 2 cores

More than 14 cores Min. 3 cores

5.9.10 SITE / COMMISSIONING TESTS

5.9.10.1 Site tests shall include all tests to be carried out at site upon receipt of equipment. It shall include but not be limited to testing calibration, configurations and pre commissioning trials start up tests, trial operation and performance and guarantee tests. The bidder shall be responsible for all site/commissioning tests.

5.9.10.2 The bidder shall maintain all tests, calibration records in NTPC approved formats, and these shall be countersigned by authorized quality assurance personnel of the bidder supervising these works.

5.9.10.3 The bidder shall maintain master checklists to ensure that all tests and calibration for all equipment/devices furnished under these specifications are satisfactorily completed under the supervision of the authorized quality assurance personnel of the bidder.

5.9.10.4 The site / commissioning tests shall be categorized under following categories:

(a) Start up tests
(b) Calibration and configuration checks
(c) Pre-commissioning tests
(d) Trial Operation
(e) Availability Tests

5.9.10.5 Point-to-point testing of all the I/O signals under the present scope of work shall be done by the bidder at the plant and protection equipment end and the terminal end.

5.9.10.6 Point-to-point testing shall include:

- Verification of all status indications by operating the plant
- Verification of event / alarm indications by simulating alarm conditions
- Verification of all analogue indications by injection testing
- Verification of all controls by operating the plant

5.9.11 TYPE TEST REQUIREMENTS

Test reports for following type tests shall be submitted for all numerical relays/ DR. Test reports / certificates of tests conducted in accredited laboratories (accredited by the national accreditation body of the country where the lab is located) are also acceptable.

5.9.11.1 Numerical Relays

A. Insulation Tests:

S No	Description	Standard
1	Dielectric Withstand Tests	IEC 60255-5 2kV rms for 1 minute between all case terminals connected together and the case earth. 2kV rms for 1 minute between all terminals of independent circuits with terminals on each independent circuit connected together. ANSI/IEEE C37.90-1989 1kV rms for 1 minute across the open contacts of the watchdog relays. 1kV rms for 1 minute across open contacts of changeover output relays. 1.5kV rms for 1 minute across open contacts of normally open output relays.
2	High Voltage Impulse Test, class III	IEC 60255-5 5 kV peak; 1.2/50 μsec; 0.5 J; 3 positive and 3 negative shots at intervals of 5 sec

B. Electrical Environment Tests:

1	DC Supply Interruption	IEC 60255-11
2	AC Ripple on DC supply	IEC 60255-11
3	AC voltage dips and short Interruptions	IEC 61000-4-11
4	High Frequency Disturbance	IEC 60255–22–1, class III At 1MHz, for 2s with 200Ω source impedance: 2.5 kV peak; 1 MHz; T = 15 μsec; 400 shots/sec; duration 2 sec between independent circuits and independent circuits and case earth. 1.0kV peak across terminals of the same circuit
5	Fast Transient Disturbance	IEC 60255-22-4, class IV 4kV, 2.5kHz applied directly to auxiliary supply 4kV, 2.5kHz applied to all inputs.
6	Surge Withstand Capability	EEE/ANSI C37.90.1 (1989) 4kV fast transient and 2.5kV oscillatory applied directly across each output contact, optically isolated input and power supply circuit.
7	Electrostatic Discharge	IEC 60255-22-2 Class 4 15kV discharge in air to user interface, display and exposed metal work.
8	Surge Immunity	IEC 61000-4-5: 1995 Level 4 4kV peak, 1.2/50ms between all groups and case earth. 2kV peak, 1.2/50ms between terminals of each group.

C. EMC Tests:

S No	Description	Standard
1	Radiated Immunity	C37.90.2: 1995 25MHz to 1000MHz
2	Radiated Electromagnetic Field Disturbance Test	IEC 60255-22-3 80-1000MHz, 80% Amplitude Modulated
3	Disturbances Induced by Radio Frequency fields, Amplitude Modulated (Conducted Immunity)	IEC 60255-22-6 150kHz – 80 MHz; 80%
4	Power Frequency Magnetic Field	IEC 61000-4-8, class IV
5	Interference Voltage, Aux. Voltage (Conducted Emission)	EN 50081-2, 1994 or equivalent 150 kHz to 30 MHz
6	Interference Field Strength (Radiated Emission)	EN 50081-2, 1994 or equivalent 30 MHz to 1000 MHz

D. Atmospheric Environment Tests:

S No	Description	Standard
1	Temperature	IEC 60255-6 IEC 60068-2-1 for Cold IEC 60068-2-2 for Dry heat
2	Humidity	IEC 60068-2-3 56 days at 93% RH and +40ºC

E. Mechanical Stress Tests:

S No	Description	Standard
1	Vibration (during Operation and Transportation)	IEC 255-21-1; IEC 68-2-6
2	Shock (during Operation and Transportation)	IEC 255-21-2, class 1, IEC 68-2-27
3	Seismic Vibration (during Operation)	IEC 60255-21-3

5.9.12 SETTINGS

The bidder shall provide BHEL/NTPC a philosophy document clearly setting out the philosophy the bidder will use in determining setting levels. Each setting will have a brief description of the specific function or element. The setting calculation and formula will also be shown on the document. All relevant system parameters, transformer data additionally used for calculating the setting will appear in the setting document. The bidder will conduct system studies in determining fault levels on different locations. These study results will also form part of the setting document. Any additional information required to complete this exercise shall be timely requested by the bidder.

The setting document will be presented and discussed with the Employer prior to final issue of the document. The final accepted setting document should be made available to the Employer in PDF format.

It is the bidder's responsibility to configure each protection relay to provide the protection and control facilities required. A full set of relay configuration and setting files shall be included in the design and documentation submissions. The bidder will issue three sets of setting documents once accepted.

5.10 DISCONNECTORS AND EARTH SWITCHES (ISOLATORS AND ACCESSORIES)

5.10.1 **GENERAL**

5.10.1.1 The isolators and accessories shall conform in general to IEC 62271-102 (or equivalent Indian standard) except to the extent explicitly modified in specification.

5.10.1.2 Earth switches shall be provided on isolators wherever called for.

5.10.1.3 The isolators and earth switches shall be A. C. motor operated.

5.10.1.4 Isolators shall be Horizontal Centre Break type

5.10.2 **DUTY REQUIREMENTS**

5.10.2.1 Isolators and earth switches shall be capable of withstanding the dynamic and thermal effects of the maximum possible short circuit current of the system in their closed position. They shall be constructed such that they do not open under influence of short circuit current and wind pressure together. The earth switches wherever provided shall be constructional interlocked so that the earth switches can be operated only when the isolator is open and vice-versa.

5.10.2.2 In addition to the constructional interlock, isolator and earth switches shall have provision to prevent their electrical and manual operation unless the associated and other interlocking conditions are met. All these interlocks shall be of fail safe type. Suitable individual interlocking coil arrangements shall be provided. The interlocking coil shall be suitable for continuous operation from DC supply and within a variation range as stipulated in relevant section. The interlock coil shall be provided with adequate contacts for facilitating permissive logic for 'DC' control scheme of the isolator as well as for AC circuit of the motor to prevent opening or closing of isolators when the interlocking coil is not energised.

5.10.2.3 The earthing switches shall be capable of discharging trapped charges of the associated lines. Isolator and earth switches shall be able to bear on the terminals the total forces including wind loading and electrodynamic forces on the attached conductor without impairing reliability or current carrying capacity.

5.10.2.4 The isolator shall be capable for making/breaking normal currents when no significant change in voltage occurs across the terminals of each pole of the isolator on account of making/breaking operation.
5.10.2.5 All isolators of class above 72.5 kV shall be of mechanical endurance class M2 as per IEC. All earth switches shall be of class M0 duty.
5.10.3 **CONSTRUCTIONAL FEATURES**
5.10.3.1 The isolators shall be provided with high pressure current carrying contacts on the hinge/ jaw ends and all contact surfaces shall be silver plated. The thickness of silver plating wherever provided should not be less than 25 microns.
5.10.3.2 The isolator shall be provided with a galvanised steel base provided with holes and designed for mounting on a lattice/pipe support structure. The base shall be rigid and self supporting. The position of movable contact system (main blades) of each of the isolator and earthing switch shall be indicated by a mechanical indicator at the lower end of the vertical rod of shaft for the isolator and earthing switch. The indicator shall be of metal and shall be visible from operating level.
5.10.3.3 All metal parts shall be of non-rusting and non-corroding metal. Current carrying parts shall be from high conductivity electrolytic copper/aluminium. Bolts, screws and pins shall be provided with lock washers. Keys or equivalent locking facilities, if provided on current carrying parts, shall be made of copper silicon alloy or equivalent. The live parts shall be designed to eliminate sharp joints, edges and other corona producing surfaces.
5.10.3.4 The isolators shall be so constructed that the switch blade will not fall to the closed position if the operating shaft gets disconnected. Isolators and earthing switches including their operating parts shall be such that they cannot be dislodged from their open or closed positions by gravity, wind pressure, vibrations shocks or accidental touching of the connecting rods of the operating mechanism. The switch shall be designed such that no lubrication of any part is required except at very infrequent intervals.
5.10.3.5 The insulator of the isolator shall conform to the requirements stipulated elsewhere and shall have a min. cantilever strength of 800 kg.
5.10.4 **EARTHING SWITCHES**
Where earthing switches are specified these shall include the complete operating mechanism and auxiliary contacts. The earthing switches shall form an integral part of the isolator and shall be mounted on the base frame of the isolator. Earthing switches shall be suitable for local operation only. The earthing switches shall be constructional interlocked with the isolator so that the earthing switches can be operated only when isolator is open and vice versa.
5.10.5 **OPERATING MECHANISM AND CONTROL**
5.10.4.1 The Contractor shall offer, motor operated switches having padlock arrangement for both ‘ON’ and ‘OFF’ positions.
5.10.4.2 Limit switches for control shall be fitted on the isolator/ earth switch shaft, within the cabinet to sense the open and close positions of the isolators and earth switches.
5.10.4.3 It shall not be possible, after final adjustment has been made for any part of the mechanism to be displaced at any point in the travel sufficient enough to allow improper functioning of the isolator when the isolator is opened or closed at any speed.
5.10.4.4 Control cabinet/operating mech. box shall conform to requirements stipulated under auxiliary equipment mentioned elsewhere in the chapter and IS:5039/IS 8623/IEC 60439 as applicable.
5.10.5 **OPERATION**
5.10.5.1 Isolator shall be electrically/mechanically gang operated for main blades and earth switches. The operation of the three poles shall be well synchronised and interlocked.
5.10.5.2 The design shall be such as to provide maximum reliability under all service conditions. All operating linkages carrying mechanical loads shall be designed for negligible deflection. The length of inter insulator and interpole operating rods shall be capable of adjustments.

5.10.5.3 The design of linkages and gears be such so as to allow one man to operate the handle with ease for isolator and earth switch.

5.10.6 **TESTS**

5.10.6.1 In continuation to the requirements stipulated elsewhere the isolator alongwith operating mechanism shall conform to the type tests and shall be subjected to routine tests and acceptance tests in accordance with IEC 62271-102. During final testing of isolator sequential closing/ opening of earth switch shall also be checked only after isolator is fully open/close.

5.10.6.2 The insulator shall conform to all the type tests as per IEC 60168. In addition to all type, routine and acceptance tests, as per IEC-60168, the following additional routine/ acceptance tests shall also be carried out:

a) Bending load test in four directions at 50% min. bending load guaranteed in all insulators.

b) Bending load test in four directions at 100% min. bending load guaranteed on sample insulators in a lot.

c) Torsional test on sample insulator of a lot.

5.10.7 **PARAMETERS**

a) Type of isolator- Outdoor type

b) Rated frequency- 50 Hz

c) Number of poles- Three (3)

d) Operating time- Not more than 12 sec.

e) Control voltage- 110/220V DC

f) Auxiliary contacts on Isolator- As required plus 8NO and 8NC contacts per pole/isolator as spare. The contacts shall have continuous rating of 10A and breaking capacity of 2A with circuit time constant of minimum 20 millisecond at 220V dc. Additionally MBB contacts as required shall also be provided.

g) Auxiliary contacts on earth switch- Total 6NO and 6NC

h) Rated mechanical terminal load- As per table III of IEC 62271-102

i) Temperature rise over- As per IEC:62271-102 ambient

j) Rated ambient temperature- 50 deg C

k) System neutral earthing- Effectively earthed

l) Support structure height- Adequate so that lowest part of support insulator of equipment is min. 2550 mm from plinth level

m) Rated mechanical terminal- As per table III of IEC 62271-102 Load

n) Operating mechanism of Motor operated Isolator and Earth Switch- AC/DC/Universal

o) Temperature rise- As per Table III of IEC 60694 for an ambient of 50 deg C

5.10.8 **245 kV Class Isolators** :

a) Rated voltage- 220 kV

b) Highest System voltage- 245 kV

c) Rated current at 50°C ambient min. temperature- 2000 Amp

d) Rated short time withstand current for 1 sec of isolator and earthswitch- 40 kA rms

e) Rated dynamic short circuit withstand current of isolator and earthswitch- 100kAp

f) Rated Insulation levels

	1.2/50 micro sec. lightning impulse withstand voltage (+ ve or – ve polarity) earth) impulse on one terminal and other terminal earthed	One minute power freq. withstand voltage (Between live terminal and
To earth	+/-1050 kV (Peak)	460 kV (rms)
Across isolating distance	+/-1200 kV peak	530 kV (rms)

g) Phase to phase spacing- 4500 mm (other type tested spacing are also acceptable)

h) Max. Radio interference between 0.5MHz to 2.0 MHz at 156 kV (rms)- 1000 micro volts

5.11 **INSTRUMENT TRANSFORMER**

5.11.1 **CODES AND STANDARDS**

Current transformers IEC 60044, BS:3938, IS: 2705 IEC 61869
Voltage transformers IEC 60044 IEC 60358, IS:3156 IEC 61869
Insulating oil IS: 335

5.11.2 **GENERAL REQUIREMENTS**

5.11.2.1 The instrument transformers i.e. current and voltage transformers shall be single phase transformer units and shall be supplied with a common marshaling box for a set of three single phase units.

5.11.2.2 The tank as well as top metallics shall be hot dip galvanised or painted with Grey color of shade RAL 9002.

5.11.2.3 The instrument transformers shall be hermetically sealed units. The instrument transformers shall be provided with filling and drain plugs.

5.11.2.4 Polarity marks shall indelibly be marked on each instrument transformer and at the lead terminals at the associated terminal block.

5.11.2.5 The insulators shall have a cantilever strength of more than 350 kg.

5.11.2.6 No Oil shall come into direct contact with Zinc galvanized surface.

5.11.2.7 Metering terminal box shall be provided in a separate compartment for Instrument Transformers (CT & CVT) with separate locking Arrangement.

5.11.3 **CURRENT TRANSFORMERS (OIL FILLED CTs) (Metering and protection CTs)**

5.11.3.1 The CTs shall have single primary of either ring type or hair pin type or bar type. The Wound Primary type is not acceptable.

In case of "Bar Primary" inverted type CTs, the following requirements shall be met:

The secondaries shall be totally encased in metallic shielding providing a uniform equipotential surface for even electric field distribution. The lowest part of insulation assembly shall be properly secured to avoid any risk of damage due to transportation stresses.

The upper part of insulation assembly sealing on primary bar shall be properly secured to avoid any damage d
uring transportation due to relative movement between insulation assembly and top dome. The insulator shall be one piece without any metallic flange joint

5.11.3.2 The CT shall be provided with oil sight glass which should be clearly visible to maintenance personnel standing on ground.

5.11.3.3 The core lamination shall be of cold rolled grain oriented silicon steel or other equivalent alloys. The cores shall produce undistorted secondary current under transient conditions at all ratios with specified parameters. The CTs shall be suitable for high speed auto-reclosing.

5.11.3.4 Different ratios shall be achieved by secondary taps only, and primary reconnections shall not be accepted.

5.11.3.5 The guaranteed burdens and accuracy class are to be intended as simultaneous for all cores.

5.11.3.6 The instrument security factor at all ratios shall be less than five (5) for metering core. If any auxiliary CT/reactor is used, then all parameters specified shall be met treating auxiliary CTs/reactors as integral part of CT. The auxiliary CT/reactor shall preferably be in-built construction of the CT. In case it is separate, it shall be mounted in secondary terminal box.

5.11.3.7 The physical disposition of protection secondary cores shall be in the same order as given under CT requirement table(s) given below.

5.11.3.8 The secondary terminals shall be terminated on stud type suitable no's of nondisconnecting and disconnecting terminal blocks as required inside the terminal box of degree of protection IP:55 at the bottom of CT. The CTs shall be suitable for horizontal transportation.

5.11.3.9 The CTs shall have provision for taking oil samples from bottom of CT without exposure to atmosphere to carry out dissolved gas analysis periodically. Contractor shall give his

recommendations for such analysis, i.e. frequency of test, norms of acceptance, quantity of oil to be withdrawn, and treatment of CT.
5.11.3.10 The CT shall have provision for measurement of capacitance and tan delta as erected at site.

5.11.4 VOLTAGE TRANSFORMERS (CVTs) (Metering and protection CVTs)

5.11.4.1 Voltage transformers shall be of capacitor voltage divider type with electromagnetic unit.
5.11.4.2 The CVTs shall be thermally and dielectrically safe when the secondary terminals are loaded with guaranteed thermal burdens.
5.11.4.3 The electro-magnetic unit (EMU) shall comprise of compensating reactor, intermediate transformer and protective and damping devices. The oil level indicator of EMU with danger level marking shall be clearly visible to maintenance personnel standing on ground.
5.11.4.4 The secondaries shall be protected by HRC cartridge type fuses for all windings In addition fuses shall also be provided for protection and metering windings for connection to fuse monitoring scheme. The secondary terminals shall be terminated on stud type non-disconnecting terminal blocks via the fuse inside the terminal box of degree of protection IP: 55. The access to secondary terminals shall be without the danger of access to high voltage circuit.
5.11.4.5 The damping device shall be permanently connected to one of the secondary winding and shall be capable of suppressing ferro-resonance oscillations.
5.11.4.6 CVTs shall be suitable for high frequency (HF) coupling for power line carrier communication. Carrier signals must be prevented from flowing into potential transformer (EMU) metering circuit by means of RF choke/reactor suitable for effective blocking the carrier signals over the entire frequency range of 40 to 500 kHz. HF terminal shall be brought out through a suitable bushing and shall be easily accessible for connection to the coupling filters of the carrier communication equipment. The HF terminal shall be provided with earthing link with fastener.
5.11.4.7 A protective surge arrester/spark gap shall preferably be provided to prevent break down of insulation by incoming surges and to limit abnormal rise of terminal voltage of shunt capacitor, tuning reactor, RF choke, etc. due to short circuit in transformer secondary. The details of this arrangement (or alternative arrangement) shall be furnished by Contractor for Employer's review.
5.11.4.8 The protection cores shall not saturate at about 1.5 times the rated voltage for a min. duration of 30 secs.
5.11.4.9 The accuracy of metering core shall be maintained through the entire burden range upto 75VA on all three windings without any adjustments during operations
5.11.4.10 **MARSHALLING BOX**
Marshaling box shall conform to all requirements as given elsewhere. The wiring diagram for the interconnection of three phase instrument transformer shall be pasted inside the box. Terminal blocks in the marshaling box shall have facility for star/delta formation, short circuiting and grounding of secondary terminals. The box shall have enough terminals to wire all control circuits plus 20 spare terminals.

5.11.5 **PARAMETERS FOR CURRENT TRANSFORMERS**

5.11.5.1 **General Parameters**

a) One minute power frequency withstand voltage between secondary terminal and earth- 5 kV
b) Partial discharge level- 10 pico Coulombs max.
c) Temperature rise- As per IEC 60044
d) Type of insulation- Class A
e) Number of cores- As per AC SLD
f) Installation- Outdoor (up right)
g) Number of terminals in marshalling box- All terminals of control circuits wired upto marshalling box plus 20 terminals spare.
h) System Neutral earthing- Effectively earthed

5.11.5.2 **220 kV Current Transformers**

a) Highest System voltage- 245 kV

b) Rated short time thermal current- 40 kA for 1 sec.
c) Rated dynamic current- 100 kA (peak)
d) Rated extended primary current- 120% of rated primary current.
e) Rated insulation level :
i) 1.2/50 micro seconds (impulse voltage)- 1050 kV (Peak)
ii) 1 minute (dry and wet) power frequency withstand voltage- 460 kV (rms)
f) Maximum temperature rise at an ambient temperature of 50 deg C- As per IEC-60044
g) Max. Radio interference voltage at 156kV (rms)- 1000 micro volts
h) Partial discharge level immediately After p.f. test- 10 picocoulumbs (max.)

5.11.6 **PARAMETERS FOR CVTs**

5.11.6.1 **General Parameters**

a) Installation Outdoor
b) Standard reference range of frequencies for which the accuracies are valid 96% to 102% for protection and 99% to 101% for measurement.
c) High frequency capacitance for entire carrier frequency range within 80% to 150% of rated capacitance
d) Equivalent resistance over entire carrier frequency range Less than 40 ohms
e) Stray capacitance and stray conductance of LV terminal over entire carrier frequency range As per IEC:60358
f) One minute power frequency withstand voltage
a) between LV (HF) terminal and earth 10kV rms for exposed terminals or 4 kV rms for terminals enclosed in a weather proof box.
b) For secondary winding 2 kV rms
g) Temp. rise over an ambient temp. of 50 deg. C As per IEC 60044-2
h) Number of terminals in control Cabinet All terminals of control circuits wired upto marshalling box plus 10 terminals spare.
i) Rated total thermal burden 225 VA
j) Partial discharge level 10 pico Coulombs max.
k) Number of cores As per details given in Tables below.
l) Rated Voltage factor 1.2 continuous , 1.5 – 30sec

5.11.6.2 **220 kV Voltage Transformers**

a) Rated system voltage 245 kV (rms)
b) Rated insulation levels
c) 1.2 micro sec. impulse ±1050 kV (peak)
d) 1 min (dry& wet) power frequency withstand voltage 460 kVrms
e) HF capacitance 8800 pf (nominal)
f) RIV at 156 kV rms 1000 microvolts (max)

5.11.7 **TESTS**

The current and voltage transformers shall confirm to type tests and shall be subjected to routine & acceptance tests in accordance with the relevent IS/IEC.
CTs & CVTs shall also conform to the following additional type tests as applicable:
(i) Radio Interference Voltage test
(ii) Thermal withstand test i.e. application of rated voltage and rated current simultaneously by synthetic test circuit(For CT only)
(iii) Thermal co-efficient test i.e. measurement of Tan-Delta as function of temperature (at ambient and between 80 deg. C and 90 deg. and voltage (at 0.3, 0.7, 1.0 and 1.1 Um/√3)(For CT only)
(iv) Multiple chopped impulse test on Primary winding.

TABLE – IA
CORE DETAILS OF 220 KV PROTECTION CT (Metering CTs will be as per AC SLD)

Core No	Application	Current Ratio (A)	Output Burden (VA)	Accuracy Class as per IEC 185	Min. knee point voltage (V)	Max. CT Sec. wdg. Resistance (ohms)	Max. exciting current in mA at knee point voltage
1	Bus Diff. Check	2000/1000/1	--	PS	2000/1000	10/5	30/60
2	Bus Diff. Main	2000/1000/1	--	PS	2000/1000	10/5	30/60
3	Metering and synchronizing	200/100/1	20	0.2s	--	--	--
4	Trans. Back up/ Line protection	2000/1000/500/1	--	PS	2000/1000/500	10/5/2.5	30/60/120
5	Trans. Diff./ Line protection	2000/1000/500/1	--	PS	2000/1000/500	10/5/2.5	30/60/120

Note:
The rated extended primary current of the CTs shall be 120% continuous of 2000 A. ISF for metering core should be less than 5.

TABLE-IB
CORE DETAILS OF 220 KV PROTECTION CVTs (Metering CVTs will be as per AC SLD)

	Secondary 1	Secondary 2	Secondary 3
Rated secondary voltage	110 / √ 3	110 / √ 3	110 / √ 3
Application	Protection	Protection	Metering
Accuracy	3P	3P	0.2
Output Burden (minimum)	75 VA	75 VA	75 VA

Note : The accuracy of 0.2 on secondary should be maintained through the entire burden range up to 75 VA on all the three windings without any adjustments during operation.

5.12 **SURGE ARRESTOR**
5.12.1 **GENERAL**
5.12.1.1 The surge arrestors shall conform in general to IEC-60099-4 and IS:3070 except to the extent modified in the specification.
5.12.1.2 Arrestors shall be hermetically sealed units, self-supporting construction, suitable for mounting on lattice/tubular type support structures.
5.12.2 **DUTY REQUIREMENTS**
5.12.2.1 The Surge Arresters (SAs) shall be capable of discharging over-voltages occurring due to switching of unloaded transformers, reactors and long lines.
5.12.2.2 The reference current of SAs shall be high enough to eliminate the influence of grading and stray capacitance on the measured reference voltage.

5.12.2.3 The SAs shall be fully stabilised thermally to give a life expectancy of one hundred (100) years under site conditions and take care of effect of direct solar radiation.
5.12.2.4 The SAs shall be suitable for circuit breaker duty cycle in the given system. The SAs shall be capable of withstanding meteorological and short circuit forces under site conditions.
5.12.2.5 The SAs shall protect power transformers, circuit breakers, disconnecting switches, instrument transformers, etc. with insulation levels specified in this specification.
5.12.2.6 The SAs shall be capable of withstanding meteorological and short circuit forces under site conditions.
5.12.3 **CONSTRUCTIONAL FEATURES**
5.12.3.1 Each Surge Arrester (SA) shall be hermetically sealed single phase unit.
5.12.3.2 The non-linear blocks shall be sintered metal oxide material. The SA construction shall be robust with excellent mechanical and electrical properties.
5.12.3.3 SAs shall have pressure relief devices and arc diverting ports suitable for preventing shattering of porcelain housing and to provide path for flow of rated fault currents in the event of SA failure.
5.12.3.4 The SA shall not fail due to insulator contamination.
5.12.3.5 Seals shall be effectively maintained even when SA discharges rated lightning current.
5.12.3.6 Porcelain shall be so coordinated that external flashover will not occur due to application of any impulse or switching surge voltage up to maximum design value for SA. The cantilever strength of the insulator shall be minimum 350kg.
5.12.3.7 The end fittings shall be non-magnetic and of corrosion proof material.
5.12.3.8 The Contractor shall furnish the following:
a) The heat treatment cycle details with necessary quality checks used for individual blocks along with insulation layer formed across each block.
b) Metalizing coating thickness for reduced resistance between adjacent discs alongwith procedure for checking the same.
c) Details of thermal stability test for uniform distribution of current on individual discs.
d) Detailed energy calculations to prove thermal capability of discs.
5.12.4 **FITTINGS AND ACCESSORIES**
5.12.4.1 Each SA shall be complete with insulating base for mounting on structure.
5.12.4.2 SAs shall be provided with grading and/or corona rings as required.
5.12.4.3 Self contained discharge counters, suitably enclosed for outdoor use (IP:55 degree of protection) and requiring no auxiliary or battery supply shall be fitted with each SA along with necessary connections to SA and earth. Suitable leakage current meters shall also be supplied in the same enclosure. The reading of milliammeter and counter shall be visible through an inspection glass panel to a man standing on ground. A pressure relief vent/suitable provision shall be made to prevent pressure build up. The earth connection for the Surge Arrester shall be carried out in such a manner so that the discharger current path is diverted to earth and the path through structure is avoided.
5.12.5 **PARAMETERS**
5.12.5.1 **General**
a) System neutral earthing Effectively earthed
b) Installation Outdoor
c) i) Nominal discharge current 10 kA of 8/20 microsec. wave
ii) Discharge current at which Insulation coord. is done 20 kA of 8/20 microsec. wave
d) Rated frequency 50 Hz
e) Long duration discharge class 3
f) Current for pressure relief test 40 kA rms
g) Prospective symmetrical fault current 40 kA rms for 1 second
h) Low current long duration test value (2000 micro sec.)As per IEC
i) Pressure relief class Class A of Table VII of IS:3070 or equiv. IEC.
j) Partial discharge at 1.05 MCOV (Continuous operating voltage) Not more than 50 p.C.

k) Siesmic acceleration 0.3 g horizontal
l) Reference ambient temp. 50 deg. C
5.12.5.2 **220kV class Surge Arrestors**
a) Rated system voltage 245 kV
b) Rated arrestor voltage 216 kV(not less than)
c) Minimum discharge capability 5 kJ/kV (referred to rated arrestor voltage corresponding to min. discharge characteristics
d) Continuous operating voltage (COV) at 50 deg. C 168 kV rms
e) Maximum Switching surge residual voltage (1 kA) 500kVp
f) Maximum residual voltage at
i) 10kA nominal discharge current as per IEC
ii) 20kA nominal discharge current As per IEC
g) Max. steep current residual voltage at 10 kA 650 kVp
h) Long duration discharge class 3
i) Current for Pressure Relief test 40 kArms
j) High current short duration test value (4/10 microsec. wave) 100 kAp
k) One minute dry/wet power frequency 460 kV (rms)
l) Impulse withstand voltage of arrestor withstand voltage of arrestor housing (dry & wet) 1050kVp housing with 1.2/50 micro sec. wave.
m) Radio interference voltage at 156 KV Not more than 1000 micro volt
n) Partial discharge at 1.05 MCOV (continuous operating voltage) Not more than 50 p.c.
The surge arrestors are provided to protect the following equipment whose insulation levels are indicated in the table I given below. The contractor shall carry out the insulation coordination studies for deciding the location of the surge arrestors.
TABLE – I

S No	EQUIPMENT TO BE PROTECTED	INSULATION LEVEL LIGHTNING IMPULSE (kVp) FOR 220 KV SYSTEM
1	Power Transformer	± 1050
2	Instrument Transformer	± 1050
3	CB/Isolator	± 1050

5.12.6 **TESTS**
5.12.6.1 Surge Arrestors shall conform to all type tests as per IEC and shall be subjected to routine and acceptance tests in accordance with IEC-60099-4.
5.12.6.2 The resistive current drawn by the arrestor at rated voltage shall be indicated in the routine test report.

5.13 **POST INSULATOR**
5.13.1 **GENERAL**
The post insulators shall conform in general to latest IS:2544 and IEC – 60815, 60168.
5.13.2 **CONSTRUCTIONAL FEATURES**
5.13.2.1 Post type insulators shall consist of a porcelain part permanently secured in a metal base to be mounted on the supporting structures. They shall be capable of being mounted upright. They shall be designed to withstand any shocks to which they may be subjected to by the operation of the associated equipment. Only solid core insulators shall be accepted. Height of post insulator shall be preferably as given under parameters of this part.
5.13.2.2 The other requirements of insulator as given under auxiliary requirements shall also be applicable.

5.13.3 **TESTS**

5.13.3.1 In accordance with the stipulations elsewhere the post insulators shall conform to type tests and acceptance, sample and routine tests as per IS:2544, IEC-60168 shall be carried out.

5.13.3.2 In addition to acceptance/sample/routine tests as per IS:2544, IEC-60168, the following tests shall also be carried out.

a) Ultrasonic tests on all cutshells as routine check.

b) Visual examination and magnaflux test on all flanges prior to fixing.

c) Check for uniformity of thickness and weight of zinc coating as a sample test from each lot of flanges prior to fixing.

d) Bending load test shall be carried out at 50% minimum failing load in four directions as a routine test.

e) Bending load in four directions at 100% minimum bending load guaranteed on samples as per clause-2.3 of IEC. Subsequently this post insulator shall not be used.

f) Tests for deflection measurement at 20, 50, 70% of specified minimum failing load on sample.

5.13.3.3 The post insulator shall conform to following type tests as applicable according to voltage class :

a) Switching Impulse withstand test (dry & wet)

b) Lightning Impulse withstand test (dry)

c) Power frequency withstand test (dry & wet)

d) Test for deflection under load.

e) Test for mechanical strength

f) Measurement of RIV

5.13.4 **PARAMETERS**

220 kV class Bus Post Insulators

a) Type Solid core

b) Voltage class (kV) 245

c) Dry and wet one minute power frequency withstand voltage (kV) 460

d) Dry impulse withstand positive and negative(kVp) 1050

e) Max. radio interference voltage (Microvolts) for any frequency between 0.5 MHz to 2 MHz at voltage of 156 kV (rms) between phase to ground 1000

f) Total min. cantilever strength (Kg) 800

g) Min. torsional moment (Kg m) As per IEC

h) Total height of insulator (mm) 2300

i) Top p.c.d. (mm) 127

Bottom p.c.d. (mm) 254

j) No. of bolts : Top 4 : Bottom 8

k) Diameter of bolt holes (mm) : Top M16 : Bottom M16

l) Pollution level as per IEC-815 Class III, Heavy

5.14 METERING SYSTEM

As per AC SLD, Bidder has to supply and connect 1 no of ABT Meter (for internal NTPC metering network) and 3 Nos of TEM meters (for Commercial metering- Main, Check and Standby meters) with metering panels.

Supply of ABT meter and necessary interface with the existing ABT metering network are in the scope of Bidder. All required hardware shall be provided by the bidder. ABT meter shall be similar to the existing ABT meters of other 220kV bays. AT Gandhar Project, For ABT meter integration purpose, Bidder shall provide the following hardware:

(a) MOXA convertor- 01 No.

(b) 16-port Ethernet switch-01 No.

(c) LAN Cable-200 meters

5.14.1 Energy meter (0.2s accuracy class suitable for ABT-TOD requirement with metering panel as required conforming to STU/PGCIL requirement.
5.14.2 Meter shall be suitable for interfacing for synchronizing the built-in clock of the meter by GPS time synchronization equipment. Bidder shall synchronize the meter using GPS time synchronization equipment.
5.14.3 The ABT meters supplied under this contract shall also meet the requirement of respective RLDC/State power Utilities.
5.14.4 This metering system shall have following features:
i. Meters shall be microprocessor-based MWH meters having an accuracy class of 0.2S or better. MVARH meters shall have accuracy class of 0.5 or better.
ii. These meters shall have provision for downloading of data through an optical port and /or through RS 232/485 port.
iii. Even under absence of VT input, energy meter display shall be available and it shall be possible to download data from the energy meters.
5.14.5 **Technical Requirements of Energy Meters for ABT Requirement**
Contractor shall supply energy meters along with metering station, 4 Nos. machine Clients, 20 nos web client license. MRI or lap top (as applicable) as per the technical specification given below:
a) Shall be microprocessor-based conforming to IEC 62052-11, IEC 62053-22, IS 14697
b) Shall carry out measurement of active energy (both import and export) and reactive energy (both import and export) by 3-phase, 4 wire principle suitable for balanced/ unbalanced 3 phase load.
c) Shall have an accuracy of energy measurement of at least Class 0.2S for active energy and at least Class 0.5 for reactive energy.
d) The active and reactive energy shall be directly computed in CT & VT primary ratings.
e) The reactive energy shall be recorded for each metering interval in four different registers as MVARh (lag) when active export, MVARh (Lag) when active import, MVARh (lead) when active export, MVARh (Lead) when active import.
f) Two separate registers shall be provided to record MVARH when system voltage is >103% and when system voltage is < 97%.
g) Shall compute the net MWh and MVARh during each successive 15-minute block metering interval along with a plus/minus sign, instantaneous MWh, instantaneous MVARh, average frequency of each 15 minutes, net active energy at midnight, , net reactive energy for voltage low and high conditions at each midnight.
h) Each energy meter shall have a display unit. It shall display the net MWh and MVARh with a plus/minus sign and average frequency during the previous metering interval; peak MWh demand since the last demand reset; accumulated total (instantaneous) MWh and MVARh with a plus/minus sign, date and time; and instantaneous current and voltage on each phases.
i) All the registers shall be stored in a non-volatile memory. Meter registers for each metering interval, as well as accumulated totals, shall be downloadable.
All the net active/reactive energy values displayed or stored shall be with a plus /minus sign for export/import.
j) At least the following data shall be stored before being over-written for the following parameters.

Parameters	**Details**	**Min No of days**
Net MWH	15 min block	40days in meter
Aver Freq	15 min block	40days in meter
Net MVARH for V > 103%	15min block	40days in meter
Net MVARH for V < 97%	15min block	40days in meter
Cumulative Net MWH at every midnight		10 days in meter/40 days in PC

Cumulative Net MVARH for V> 103% at every midnight		10 days in Meter/40 days in PC
Cumulative Net MVARH for V < 97% at every midnight		10 days in Meter/40 days in PC
Date and time blocks of VT failure on any phase		

k) Shall have a built in clock and calendar with an accuracy of less than 15 seconds per month drift without assistance of external time synchronizing pulse.
l) Date/time shall be displayed on demand. The clock shall be synchronized by GPS time synchronization equipment being supplied by the contractor.
m) The voltage monitoring of shall be inbuilt feature provided to signal failures to the Substation Automation System, The meter shall be suitable to operate with power drawn from the VT supplies. The burden of the meters shall be less than 2 VA.
n) The power supply to the meter shall be healthy even with a single-phase VT supply. An automatic backup, in the event of non-availability of voltage in all the phases, shall be provided by a built in long life battery and shall not need replacement for at least 10 years with a continuous VT interruption of at least 2 years. Even under absence of VT input, energy meter display shall be available and it shall be possible to download data from the energy meter.
Incase data downloading is not possible in absence of VT supply, meter with provision of 220V DC auxiliary power shall be provided. Date and time of VT interruption and restoration shall be automatically stored in a non-volatile memory.
o) Shall have an optical port on the front of the meter for data collection from either a hand held meter reading instrument (MRI) having a display for energy readings or from a notebook computer with suitable software . The contractor shall supply the MRI and/or notebook complete with all optical interface unit required.
p) The meter shall have means to test MWh and MVARh accuracy and calibration at site in-situ and test terminal blocks shall be provided for the same.
q) Each meter shall have a unique identification code provided by the Owner and shall be permanently marked on the front of the meter and stored in the non-volatile memory of the meter.
5.14.6 **Type Test requirement for Energy Meter**
All Type Test Reports shall be provided as per IEC 62052-11, IEC 62053-22, IS 14697.

5.15 FIRE PROTECTION SYSTEM

The Switchyard bay shall be equipped with suitable fire protection & fire fighting systems for protection of entire equipment switchyard & Switchyard control room as per CEA/ CEIG requirements.
The installation shall meet all applicable statutory requirements, safety regulations in terms of fire protection.
The fire fighting system for the proposed installation for fire protection shall be consisting of:
a) Sand buckets
b) Portable fire extinguishers
c) Extension of existing Automatic fire detection cum High Velocity Water (HVW) Spray System.

5.15.1 Portable Fire Extinguishers and Sand Buckets

Bidder to provide following minimum numbers of type tested portable fire extinguishers as per relevant code in the switchyard location as per scope of the specification as mentioned below.
DCP Type (ABC type) (10 Kg. Capacity)- 2 nos
CO2 Type 9 kg capacity- 2 nos
Sand Buckets- 1 set

5.15.2 EXTENSION OF EXISTING AUTOMATIC FIRE DETECTION CUM HIGH VELOCITY WATER (HVW) SPRAY SYSTEM

5.15.2.1 SCOPE OF SUPPLY & SERVICES

5.15.2.1.1 Automatic Fire Detection cum high velocity water (HVW) spray system for the following equipment(s) as per technical specification and required Quantities shall be supplied, erected and commissioned for 33/220 kV Tie Transformer at Switchyard bay.

5.15.2.1.2 The scope of equipment to be furnished and erected under this specification shall cover all the systems and equipments as indicated hereunder.

i) Hydrant System

Bidder shall suitably extend the existing Fire hydrant in switchyard area as per technical specification in required Quantities for HVW spray system and connection of fire hose.

ii) Civil work

Construction of Deluge Valve Housings/Pipe Pedestals and supply of Hume Pipes as per requirement and associated civil work is included in bidder scope.

iii) General

a) Supply and installation of other system and equipment including cables, structural supports, hanger, valves, fastener, packing, gasket and all accessories required to complete erection and commissioning shall be in bidder's scope.

b) Supply & application of protective coatings and wrapping for buried pipes and pipes in RCC trenches, and painting for above ground piping, valves, pipe supports, etc. as per specifications.

c) Any other item and services, needed to make the system complete, safe and sound in operation shall be included under the scope of work by the Bidder at no extra to BHEL.

d) All pylons required for transformers shall be anchored to soak pit base slab using anchor fasteners of adequate capacity. Subsequent to fixing the pylons, lower part of pylon which would be within filled up gravel portion shall be encased with concrete for corrosion protection.

5.15.2.2 GENERAL DESIGN CRITERIA

5.15.2.2.1 The existing main fire protection system consists of a fire water hydrant system and fire water spray system serving the whole station including NTPC's plant/ facilities/ buildings.

5.15.2.2.2 All major equipments/system components of complete fire detection & protection system shall have the approval from one of the following :

a) Underwriters Laboratories of USA
b) LPCB –UK
c) VDS
d) FM-USA
e) BIS (For the approval of pumps and valves).

5.15.2.2.3 Design of fire detection & protection system shall be done as per the guidelines of TAC.

5.15.2.2.4 Any other additional equipment not specifically mentioned in the technical specification for the scope of works identified under this package but are found necessary to meet the requirements of TAC and also for safe and sound operation of the plant shall deemed to be included in the total package cost quoted by the Bidder.

5.15.2.3 **Fire Water Source**

For fire hydrant protection system, tap-off shall be taken from the existing ring main in the switchyard. Further, for spray protection system tap-off shall be taken from the existing nearby spray line. Necessary taps off shall be taken from the existing fire water hydrant headers and spray headers by the bidder in consultant with Engineer-In-Charge.

Isolation valves (gate valves) shall be provided at the point from where taps for the proposed system shall be taken.

5.15.2.4 **HVW SPRAY SYSTEM FOR INTERCONNECTING TRANSFORMERS**

5.15.2.4.1 **General**

a) System shall be pressurized continuously to normal working pressure up to the Deluge valves and spray nozzles.

b) It shall consist of water mains network, Deluge valves, Isolation valves, Y-type strainers, spray nozzles/projectors / spray nozzles piping network, detection system, instrumentation, local control panels, cables etc.
c) The system shall be automatic and shall be activated by a dedicated detection system to be provided for each of the equipment/area.
5.15.2.5 **Design Philosophy (Minimum Requirements)**
a) Minimum running water pressure at any projector/spray nozzle shall maintained for HVW spray system as per site available pressure without much drop.
b) Design discharge density shall be as per the rules of water spray system of Tariff Advisory Committee (TAC) and/or NFPA standards.
c) An isolation valve shall be provided at both upstream and downstream of each of the deluge valve and alarm valve. The size shall be same as that of the deluge valve and alarm valve.
d) Deluge valves shall be of diaphragm design type. Deluge valve along with trims shall be UL/FM or equivalent approved / listed. The deluge valve (auto resetting type) assembly shall consist of accessories such as pressure gauge (two nos.), water motor gong, alarm test valves, drain valves, strainers for these valves, hydraulic releasing system, etc. Solenoid valve for remote operation shall also be provided.
e) A strainer ('Y' type) shall be provided at upstream of deluge valve.
f) Strainer wire shall be SS (AISI 316), 30 SWG, 30 mesh. Strainer area shall be at least 4 times the pipe cross section at the pipe inlet. Pressure drop across strainer in clean condition shall not exceed 1.5 kg/cm2 at design flow of deluge valve.
g) Pressure gauges and pressure switches at upstream and downstream of deluge valves shall be provided.
h) The design features and make of all the projectors/ spray nozzles shall be UL/FM or equivalent approved / listed. Material of construction for projectors / spray nozzles shall be Stainless Steel.
i) Pressure switches shall be provided in spray and detector piping to exhibit "FIRE" and "SPRAY ON" annunciations and interlock for tripping of respective equipment wherever applicable.
j) Wet type detector network shall be provided for spray system using quartzoid bulb detectors.
k) Remote manual operation of the deluge valves shall be possible from the existing fire alarm cum control panel through the available existing operator interface if such fire alarm cum control panel exist at site. To achieve this, necessary hardware modules (for interfacing of pressure switches, limit switches and solenoids of Deluge valves) shall be provided by the contractor. These modules must be compatible to the existing Fire Alarm Panel located at Switchyard. Apart from the automatic operation of the deluge valve, the system shall have provision for manual operation of the deluge valve by means of hand operated lever close to the deluge valve assembly. There shall also be a provision to operate deluge valve electrically from a nearby local panel.
l) Each outdoor deluge valve housing shall be provided with brick wall housing on three sides and RCC roof. The fourth side of the enclosure shall be in a direction away from protected equipment.
m) All pylons required for transformers shall be anchored to soak pit base slab of individual transformer etc. using anchor fasteners of adequate capacity. No separate foundation / pedestal for pylon shall be provided by Employer. Subsequent to fixing the pylons, lower part of pylon which would be within filled up gravel portion shall be encased with concrete by contractor for corrosion protection.
5.15.2.6 **PIPING AND VALVES**
5.15.2.6.1 **GENERAL**
a) Inserts / Embedment required for all pipe / valve / equipment supports, clamps, channels, bolts, nuts, etc. to support / mount piping / valves / equipments shall be supplied and erected by the Contractor.
b) Piping for all fire protection systems shall generally be laid over ground

5.15.2.6.2 **Material of Construction**

a) Mild steel as per IS:1239 (Part-I) medium grade (upto 150 NB) & as per IS:3589 Gr 410 (above 200 NB) or Equivalent for pipes normally filled with water.

b) Mild steel as per IS:1239 (Part-I) medium grade (upto 150 NB) & as per IS:3589 Gr.410 (above 200 NB) or Equivalent and galvanised as per IS:4736 for pipes normally empty and periodically charged with water and foam system application.

c) Pipe thickness:

i) For Pipe sizes upto 150 NB and above: As per IS:1239 Part-I medium grade

ii) Pipes for size 200 NB & above shall confirm to IS: 3589 Grade 410 with wall thickness not less than 6.3 mm below 350 NB. For pipe size 350 NB and above, wall thickness shall be 8.0 mm.

d) All valves shall be as per applicable IS/BS codes and shall be provided with locking arrangement (with locks) in open or close condition. Further, all gate/butterfly valves of size 200 mm & above shall be provided with spur gear reduction unit.

e) Unless otherwise specified all elbows / bends shall be long radius type and all the flanges and counter flanges shall conform to ANSI B 16.5 Cl 150.

f) For pipe fittings the material shall conform to ASTM A 234 Gr WPB or ASTM A 105 or equivalent and dimensional standard conforming to ANSI B16.11 (socket & threaded type), ANSI B 16.9 (for butt welded fittings) and ANSI B16.5 (for flanges and flanged fittings) as the case may be. Further, Galvanised malleable Cast Iron fittings as per IS 1879 or Cast Iron fittings as per BS-1641 are also acceptable.

g) Grooved coupling : Vendor may also use mechanical grooved couplings type fittings in GI pipe lines for HVW / MVW spray system. All materials and products shall be either Underwriters Laboratories (UL) Listed or Factory Mutual (FM) Approved and installed in accordance with NFPA Standard 13 / equivalent Standard.

h) Fabricated fittings shall not be acceptable up to pipe size of 300 NB. For sizes 350 NB and above, fittings may be fabricated as per BS:2633 / BS:534. Set on set in type fittings shall not be acceptable. The fittings shall be galvanized as per IS:4736 for galvanized pipe application.

i) Welding of Galvanised iron pipes/fittings would be permitted provided the same is carried out by means of electrodes suitable for the above application and the same shall be approved by Employer. After welding, welded portions shall be applied with three coats of Zinc silicate treatment /rich paint over one coat of suitable primer. Further the Contractor shall provide proper zinc paint at the point of welding.

5.15.2.6.3 **PAINTING**

All the Equipments shall be protected against external corrosion by providing suitable painting. The surfaces of stainless steel, Gunmetal, brass, bronze and non-metallic components shall not be applied with any painting.

All Steel Surfaces (external) exposed to atmosphere (outdoor installation)

i) **Surface Preparation :** The steel surfaces to be applied with painting shall be thoroughly cleaned before painting by wire brushing, air blowing, etc.

ii) **Painting:** One (1) Coat of red oxide primer of thickness 30 to 35 microns followed up with three coats synthetic enamel paint, with 25 microns as thickness of each coat.

Painting of all equipments shall be as per manufacturer's standard practice or as detailed below whichever is superior in quality. However after erection, painting shall be done at site as per relevant clause as mentioned above in this section.

Environment	**Paint scheme**	**Total DFT**
Normal / Mild Corrosive Environment	Primer- zinc filled epoxy Finish – Aliphatic Polyurethane (shade RAL3000)(P.O Red)	Min 125 microns

5.15.2.7 **Quartzoid bulb heat detection system**

For equipments protected by HVW spray system. Upon detection of fire by QB detectors, the spray system shall be initiated.

5.15.2.8 **SPECIFICATION FOR PRESSURE GAUGE**

S No	FEATURES	ESSENTIAL/MINIMUM REQUIREMENTS
1	Sensing Element and material	Bourdon for high pressure, Diaphragm/Bellow for low pr. Of 316 SS
2	Body material	Die-cast aluminium
3	Dial size	150mm
4	End connection	1/2 inch NPT (F)
5	Accuracy	±1% of span
6	Scale	Linear, 270° arc graduated in metric units
7	Range selection	Cover 125% of max. of scale
8	Over range test	Test pr. for the assembly shall be 1.5 to the max. design pr. at 38 deg C.
9	Housing	Weather and dust proof as per IP-55
10	Zero/span adjustment	Provided
11	Accessories	Blow out disc, siphon, snubber, pulsation dampener, chemical seal (if required by process) gauge isolation valve
12	Material of Bourdon/ movement	316 SS / 304 SS

5.15.2.9 **PROCESS ACTUATED SWITCHES**

FEATURES	ESSENTIAL/MINIMUM REQUIREMENTS
Sensing Element	Piston actuated for high pressure and diaphragm or bellows for low pr./ vacuum
Material	316 SS
End connection	½ inch NPT (F)
Over range proof pressure	150% of max. design pr.
Repeatability	+ 0.5% of full range
No of contacts	2 No.+2NC. SPDT snap action dry contact
Rating of contacts	60 V DC, 6 VA (or more if required by or PLC)*
Elect connection	Plug in socket
Set point/ Dead band adjustment	Provided over full range
Enclosure	Weather and dust proof as per IP-55

Accessories	Syphon, snubber, chemical seal, pulsation dampeners as required by process
Mounting	Suitable for enclosure/ rack mounting or direct mounting

5.15.2.10 **SOLENOID VALVES**

Solenoid valves shall fulfill the following requirements: **-**

a) Type 2/3/4 way SS 316/ forged brass (depending on the application subject to Employer's approval during detailed engg.)

b) Power supply – As available at site or offered by bidder.

c) Plug in connector connection.

d) Insulation : Class "H"

5.15.2.11 **DATA SHEET FOR HYDRANT VALVE**

S No	FEATURES	ESSENTIAL/MINIMUM REQUIREMENTS
1	Type	Oblique female type as per IS: 5290
2	Size	63 mm
3	Dimensional specification	Conforming to IS: 5290 Type A
4	Working Pressure (Kg/cm2)	Max. 7.0 Min. 3.5
5	Construction Features:	
5.1	Bonnet	Screwed / Bolted
5.2	Stem	Rising
6	Material of Construction	
6.1	Body & Bonnet	SS-304 / SS-316 (for corrosive environment)
6.2	Stop valve, valve seat, trim, etc.	SS-304 / SS-316 (for corrosive environment)
7	Operation	Hand wheel.
8	Direction of Hand wheel to open	As indicated by an arrow head on the hand wheel
9	Ends	
	a) Inlet	Flanged (flat faced) drilled as per ANSI B16.5, Cl.150.

5.15.2.12 **DATA SHEET FOR BUTTERFLY VALVE**

1	Size Range	50 MM & Above
2	Design Code & Rating	Double flanged or lugged wafer type of low leakage rate confirming to AWWA C-504/BS:EN:593/API 609/equivalent
3	Pressure Rating	PN 16
4	End Connection	Flanged as per ANSI B.16.5 Class 150 / BSEN 1092
5	Operating Condition	

5.1	Working Pressure	12 Kg/cm2
5.2	Working Temperature	ambient (50OC)
5	Service	Water
6	Material of Construction	
6.1	Body & Disc	Cast Iron
6.2	Shaft	SS 410 / SS 420
6.3	Seat Rings	EPDM

Accessories Required
a) Position Indicator
b) Draining arrangement for Valve Seat
c) Locking Facility with lock
d) Spur gear reduction unit for valve size 200 NB and above.
Notes:-
1. The body shall be permanently marked with an “arrow” inscription indicating the direction of flow of the fluid.
2. Manufacturer’s catalogue and dimensional Drg. for the valves shall be furnished by the Contractor.
3. Valve shall be approved by BIS.
4. Inspection and Testing shall be as per NTPC approved QAP & TAC regulation if any.

5.16 33 kV OUTDOOR EQUIPMENT

5.16.1 ISOLATORS
The isolators and accessories shall conform in general to IEC 62271-102 (or equivalent Indian standard) except to the extent explicitly modified in specification.
Earth switches shall be provided on isolators wherever called for.

Operating mechanism of Isolator and earth switch	Manual/Electrically Operated
Nominal system voltage	33kV
Highest system voltage	36kV
Type	Outdoor
Rated continuous current	Min. 630A at rated ambient temperature current capacity
Rated short time current of isolator and earth switch	12.5 kA for 1 sec
Rated dynamic short time withstand current of isolator and earth switch	31.25kA (peak)
Impulse withstand voltage with 1.2/50 micro sec. wave	170kVp to earth 195 kVp across isolating distance
One minute power frequency withstand Voltage	70 kV (rms) to earth & 80 kV (rms) across isolating distance
Temperature rise	As per Table-IV of IS: 9921
Rated mechanical terminal load	As per 62271-102
Creepage distance (Total)	1260 mm
Line charging breaking capacity	6.3 A
Transformer off-load breaking capacity	6.3 A

Isolator shall be gang operated for main blades and earth switches. The operation of the three poles shall be well synchronised and interlocked.
The design of linkages and gears shall be such so as to allow one man to operate the handle with ease for isolator and earth switch.

They shall be constructed such that they do not open under influence of short circuit current and wind pressure together. The earth switches wherever provided shall be constructional interlocked so that the earth switches can be operated only when the isolator is open and vice-versa. The insulator of the isolator shall have a min. cantilever strength of 350 kg.
In addition to the constructional interlock, isolator and earth switches shall have provision to prevent their electrical and manual operation unless the associated and other interlocking conditions are met. All these interlocks shall be of fail safe type. Suitable individual interlocking coil arrangements shall be provided. The interlocking coil shall be suitable for continuous operation from DC supply and within a variation range as stipulated in relevant section. The interlock coil shall be provided with adequate contacts for facilitating permissive logic for 'DC' control scheme of the isolator as well as for AC circuit of the motor to prevent opening or closing of isolators when the interlocking coil is not energised.

5.16.2 INSTRUMENT TRANSFORMER

a) General Requirement

The instrument transformers i.e. current and voltage transformers shall be single phase transformer units and shall be supplied with a common marshaling box for a set of three single phase units.
The tank as well as top metallics shall be hot dip galvanised or painted Grey color as per RAL 9002. No oil shall come in contact with zinc galvanized surface.
The instrument transformers shall be oil filled hermetically sealed units. The instrument transformers shall be provided with filling and drain plugs.
Polarity marks shall indelibly be marked on each instrument transformer and at the lead terminals at the associated terminal block.
The insulators shall have cantilever strength of more than 350 kg.

b) MARSHALLING BOX

The wiring diagram for the interconnection of three phase instrument transformer shall be pasted inside the box in such a manner so that it is visible and it does not deteriorate with time. Terminal blocks in the marshaling box shall have facility for star/delta formation, short circuiting and grounding of secondary terminals. The box shall have enough terminals to wire all control circuits plus 20 spare terminals.

c) CURRENT TRANSFORMERS (CTs)

The CTs shall have single primary of either ring type or hair pin type or bar type. In case of "Bar Primary" inverted type CTs, the following requirements shall be met:
The secondaries shall be totally encased in metallic shielding providing a uniform equi-potential surface for even electric field distribution.
The lowest part of insulation assembly shall be properly secured to avoid any risk of damage due to transportation stresses.
The upper part of insulation assembly sealing on primary bar shall be properly secured to avoid any damage during transportation due to relative movement between insulation assembly and top dome.
The insulator shall be one piece without any metallic flange joint. The CT shall be provided with oil sight glass/oil level indicator.
The core lamination shall be of cold rolled grain oriented silicon steel or other equivalent alloys. The cores shall produce undistorted secondary current under transient conditions at all ratios with specified parameters.
Different ratios shall be achieved by secondary taps only, and primary reconnections shall not be accepted.
The guaranteed burdens and accuracy class are to be intended as simultaneous for all cores.
The instrument security factor at all ratios shall be less than five (5) for metering core. If any auxiliary CT/reactor is used, then all parameters specified shall be met treating auxiliary

CTs/reactors as integral part of CT. The auxiliary CT/reactor shall preferably be in-built construction of the CT. In case it is separate, it shall be mounted in secondary terminal box.
The secondary terminals shall be terminated on stud type suitable no's of nondisconnecting and disconnecting terminal blocks inside the terminal box of degree of protection IP:55 at the bottom of CT.
The CTs shall be suitable for horizontal transportation.
The CTs shall have provision for taking oil samples from bottom of CT without exposure to atmosphere to carry out dissolved gas analysis periodically. Contractor shall give his recommendations for such analysis, i.e. frequency of test, norms of acceptance, quantity of oil to be withdrawn, and treatment of CT.
The CT shall have provision for measurement of capacitance and tan delta as erected at site.

d) PARAMETERS FOR CURRENT TRANSFORMERS

GENERAL PARAMETERS

Highest system Voltage(Um)	36 kV
Rated frequency	50 Hz
System neutral earthing	effective earthed
Installation	Outdoor
Rated short time thermal current	12.5 kA for 1 sec
Rated dynamic current	31.25kA (peak)
Rated min power frequency withstand voltage (rms value)	70kV
Rated lightning impulse withstand voltage (peak value)	170kV
Partial discharge level	10 pico Coulombs max.
Minimum Creepage distance	35 mm/kV of highest system voltage
Temperature rise	As per IEC 60044
Type of insulation	Class A
Number of cores	Tariff CTs shall be single metering core with 0.2S accuracy class.
Number of terminals in marshalling box	All terminals of control circuits wired upto marshalling box plus 20 terminals spare

VOLTAGE TRANSFORMERS (VTs)

Voltage transformers shall be of Outdoor type, Oil filled, bottom and dead Tank type electromagnetic, with sealing arrangement as per IS-316-1992. It is also to be equipped with protective and damping devices Oil level indicator with danger level marking is also to be provided. They shall be of the oil immersed, self-cooled type and provided alternatively with an inert gas cushion or with metallic bellows above the-insulating oil level. A pressure relief device valve type may also be provided if permitted to design.
The VTs may be built up of high-grade non ageing cold rolled grain oriented silicon steel lamination, conforming to IS: 3024, of low hysterisis losses and high permeability to ensure high accuracy at both normal rated and above rated voltages.
The limits of temperatures rise shall not exceed the values specified in Table 3 of IS: 3156 (Part-1) 1998. However, if the voltage transformers has an inert gas cushion above the oil at the top of the tank or housing shall not exceed 50º C. The oil shall be mineral insulating oil conforming to IS: 335-1983.
The HV neutral end terminal shall not be earthed directly to the metal body of the VT but shall be brought out through a porcelain 2 KV class bushing. A tinned copper link of the bolted type shall be provided to connect the HV neutral end terminal and the earth bushing. Both the HV neutral end bushing and the earth bushing shall be housed in a. dust tight, vermin proof box with a front access bolted type gasketted cover.

The secondaries shall be protected by HRC cartridge type fuses for all windings. In addition fuses shall also be provided for protection and metering windings for connection to fuse monitoring scheme. The secondary terminals shall be terminated on stud type non-disconnecting terminal blocks via the fuse inside the terminal box of degree of protection IP55. The access to secondary terminals shall be without the danger of access to high voltage circuit.
The accuracy of metering core shall be maintained through the entire burden range upto 50VA on all three windings without any adjustments during operations.

f) PARAMETERS FOR VOLTAGE TRANSFORMERS

GENERAL PARAMETERS

Highest System Voltage(Um)	36 kV
System neutral earthing	effective earthed
Installation	Outdoor
System Fault level	12.5 kA for 1 sec
Rated min power frequency withstand voltage (rms value)	70kV
Rated lightning impulse withstand voltage (peak value)	170kV
Standard reference range of frequencies for which the accuracy are valid	96% to 102% for protection and 99% to 101% for measurement
Rated voltage factor	1.2 continuous & 1.5 for 30 sec
Class of Accuracy	For tariff metering VT - 0.2 Other VTs – 0.2
Stray capacitance and stray conductance of LV terminal over entire carrier frequency range	As per IEC:358
One Minute Power frequency Withstand voltage for secondary winding	2 kV rms
Temp. rise over an ambient temp. of 50 deg. C	As per IEC 60044
Number of terminals in control spare.	All terminals of control circuits wired Cabinet upto marshalling box plus 10 terminals
Min Creepage distance	35mm/kV of Highest voltage
Rated total thermal burden	150 VA
Partial discharge level	10 pC max.

5.16.3 **SURGE ARRESTOR**

The surge arrestors (SAs) shall conform in general to IEC 60099-4 or IS: 3070 except to the extent modified in the specification. Arresters shall be of hermetically sealed units, self-supporting construction, suitable for mounting on lattice type support structures. Bidder shall furnish the technical particulars of Surge arrester. The SAs shall be of heavy duty station class and gapless Metal Oxide type without any series or shunt gaps. The SAs shall be capable of discharging over-voltages occurring during switching of unloaded transformers, and long lines.
Arrestors shall be complete with insulating base for mounting on structure. Selfcontained discharge counters, suitably enclosed for outdoor use and requiring no auxiliary or battery supply for operation shall be provided for each single pole unit with necessary connection. Suitable leakage current meters should also be supplied within the same enclosure. The reading of millimeter and counters shall be visible through an inspection glass panel The surge arrestors shall conform to type tests and shall be subjected to routine and acceptance tests in accordance with IEC-60099-4
Rated System Voltage 36 kV
Rated Arrester Voltage 30 kV
Nominal discharge current 10 kA of 8/20 micro-sec wave
Minimum discharge capability 5 kilo joule/kV(referred to rated arrestor voltage corresponding to minimum discharge characteristics)

Maximum continuous operating 24 kV rms
Max. residual voltage (1 kA) 70 kVp
Max. residual voltage at 10 kA nominal discharge current (8/20 micro sec wave) 85 kVp
Max. switching impulse residual Voltage at 500A peak 70 kVp
Max. steep current residual voltage 93 kVp at 10kA
High current short duration test Value (4/10 micro-sec-wave) 100 kAp
Current for pressure relief test 12.5kA rms
One minute power frequency withstand voltage of arrestor housing (dry and wet) 70 kV (rms)
Impulse withstand voltage of arrestor housing with 1.2/50 micro sec. Wave 170 kV (Peak)
Partial discharge at 1.05 MCOV (continuous operating voltage) Not more than 50 p.c

15.16.4 **POST INSULATOR**

The post insulators shall conform in general to latest IS:2544 and IEC – 60815, 60168.
Post type insulators shall consist of a porcelain part permanently secured in a metal base to be mounted on the supporting structures. They shall be capable of being mounted upright. They shall be designed to withstand any shocks to which they may be subjected to by the operation of the associated equipment. Only solid core insulators shall be accepted. Height of post insulator shall be preferably as given under parameters of this part.
Other requirements of insulator as given under auxiliary requirements shall also be applicable.
In accordance with the stipulations elsewhere the post insulators shall conform to type tests and acceptance, sample and routine tests as per IS:2544, IEC-60168 shall be carried out.
Type Solid core
Voltage class 36kV
Rated one minute power frequency withstand Voltage 70 kV (rms)
Rated Lightning Impulse withstand voltage with 1.2/50 micro sec. wave 170kVp
Total min. cantilever strength As per IEC 60273
Min. torsional moment (Nm) As per IEC 60273 Creepage distance (Total) min. 1260 mm
i) Top p.c.d (mm) 76
ii) Bottom p.c.d (mm) 76
No. of bolts : Top : 4
Bottom : 4
Diameter of bolt holes (mm)
Top : M12
Bottom : M12

15.16.5 HT CABLES

15.16.5.1 CODES & STANDARDS

All standards, specifications and codes of practice referred to herein shall be the latest editions including all applicable official amendments and revisions as on date of opening of bid. In case of conflict between this specification and those (IS : codes, standards, etc.) referred to herein, the former shall prevail. All the cables shall conform to the requirements of the following standards and codes:
IS:7098 Cross linked polyethylene insulated PVC sheathed cable for (Part -II) working voltage from 3.3 KV upto & including 33 KV .
IS : 3961 Recommended current ratings for cables
IS : 3975 Low Carbon Galvanized steel wires, formed wires and tape for armouring of cables.
IS : 4905 Methods for random sampling.
IS : 5831 PVC insulation and sheath of electrical cables.
IS : 8130Conductors for insulated electrical cables and flexible cords.
IS : 10418 Specification for drums for electric cables.
IS : 10810 Methods of tests for cables.
ASTM-D -2843 Standard test method for density of smoke from the burning or decomposition of plastics.

ASTM-D-2863 Standard method for measuring the minimum oxygen concentration to support candle like combustion of plastics.
IEC-754 (Part-I) Test on gases evolved during combustion of electric cables.
IEEE-383 Standard for type test of Class IE Electric Cables.
IEC -332 Tests on Electric cables under fire conditions. Part-3 : Tests on bunched wires or cables (category -B)

15.16.5.2 TECHNICAL REQUIREMENTS

The cables shall be suitable for laying on racks, in ducts, trenches, conduits and underground (buried) installation with chances of flooding by water.
Cables shall be flame retardant, low smoke (FRLS) type designed to withstand all mechanical, electrical and thermal stresses develop under steady state and transient operating conditions as specified elsewhere in this specification.
Copper/aluminium conductor used in power cables shall have tensile strength as per relevant standards. Conductors shall be multi stranded.
XLPE insulation shall be suitable for continuous conductor temperature of 90 deg.C and short circuit conductor temperature of 250 deg C. For single-core armoured cables, the armouring may constitute the metallic part of insulation screening.
The cable cores shall be laid up with fillers between the cores wherever necessary. It shall not stick to insulation and inner sheath. All the cables, other than single core cables, shall have distinct extruded PVC inner sheath of black colour as per IS: 5831. In case of single core cables where there are both metallic screening and armouring, there shall be extruded inner sheath between them.
For single core armoured cables, armouring shall be of aluminum wires. For multi core armoured cables armouring shall be of galvanized steel as follows: -

Calculated nominal dia. of cable under armour	**Size and Type of armour**
Upto 13 mm	1.4mm dia GS wire
Above 13 & upto 25mm	0.8 mm thick GS formed wire / 1.6 mm dia GS wire
Above 25 & upto 40 mm	0.8mm thick GS formed wire / 2.0mm dia GS wire
Above 40 & upto 55mm	1.4 mm thick GS formed wire /2.5mm dia GS wire
Above 55 & upto 70 mm	1.4mm thick GS formed wire /3.15mm dia GS wire
Above 70mm	1.4 mm thick GS formed wire / 4.0 mm dia GS wire

The aluminium used for armouring shall be of H4 grade as per IS:8130 with maximum resistivity of 0.028264 ohm-sq. mm/ mtr. at 20 deg.C. The types and sizes of aluminium armouring shall be same as indicated for galvanised steel. The gap between armour wires / formed wire shall not exceed one armour wire / formed wire space and there shall be no cross over / over-riding of armour wire / formed wire. The minimum area of coverage of armouring shall be 90%. The breaking load of armour joint shall not be less than 95% of that of armour wire / formed wire. Zinc rich paint shall be applied on armour joint surface of GS wires/formed wires.
Distinct extruded PVC inner sheath of black colour as per IS:5831 shall be provided for the cables as follows:
a) For all multicore cables.
b) For single core armoured cables, where armouring is not being used as metallic screen
Outer sheath shall be of PVC black in colour. In addition to meeting all the requirements of Indian standards referred to, outer sheath of all the cables shall have the following FRLS properties.
(a) Oxygen index of min. 29 (to ASTMD 2863)
(b) Acid gas emission of max. 20% (to IEC-754-I).
(c) Smoke density rating shall not be more than 60% during Smoke Density Test as per ASTMD-2843.

Cores of the cables of unto 3 cores shall be identified by colouring of insulation or by providing coloured tapes helically over the cores with Red, Yellow & Blue colours.
In addition to manufacturer's identification on cables as per IS, following marking shall also be provided over outer sheath:
(a) Cable size and voltage grade - To be embossed
(b) Word 'FRLS' at every 5 metre - To be embossed
(c) Screen Fault current _ _ _KA for _ _ _ Sec. (Value of current & time shall be indicated)
(d) Sequential marking of length of the cable in metres at every one metre. -To be embossed / printed
The embossing / printing shall be progressive, automatic, in line and marking shall be legible and indelible.
All cables shall meet the fire resistance requirement as per IEEE - 383 with cable installations made in accordance with 'Flammability Test' and as per Category-B of IEC 332 Part -3.
Allowable tolerances on the overall diameter of the cables shall be +\-2 mm maximum over the declared value in the technical data sheets.
In plant repairs to the cables shall not be accepted. Pimples, fish eye, blow holes etc. are not acceptable.
The cross-sectional area of the metallic screen strip/tape shall be considered in design calculations.
The eccentricity shall be calculated as

$$\frac{t_{max} - t_{min}}{t_{max}} \times 100$$

and the ovality shall be calculated as

$$\frac{d_{max} - d_{min}}{d_{max}} \times 100$$

Where t-max/t-min is the maximum/minimum thickness of insulation and dmax/ d-min is the maximum / minimum diameter of the core.
The eccentricity of the core shall not exceed 10% and ovality not to exceed 2%

Cable selection & sizing

HT cables shall be sized based on the following considerations:
a) Rated current of the equipment
b) As per protection time grading requirement subject to min. of 0.5 sec. For final power evacuation feeder connecting to the GCP, the time shall be min. 1.0 sec.

De rating Factors

De rating factors for various conditions of installations including the following shall be considered while selecting the cable sizes:
a) Variation in ambient temperature for cables laid in air
b) Grouping of cables
c) Variation in ground temperature and soil resistivity for buried cables.
Cable lengths shall be considered in such a way that straight through cable joints are avoided. Cables shall be armoured type if laid directly buried.

15.16.5.3 CONSTRUCTIONAL FEATURES OF 11 KV AND ABOVE GRADE CABLES

Cables shall conform to IS: 7098 Part - II. These cables shall have mutli-stranded, compacted circular, aluminium conductors, XLPE insulated, metallic screened suitable for carrying the system earth fault current, PVC outer sheathed. The conductor screen and insulation screen shall both be of extruded semiconducting compound and shall be applied along with the XLPE insulation in a single operation of triple extrusion process so as to obtain continuously smooth interfaces.

Method of curing for cables shall be “dry curing / gas curing”. The metallic screen of each core shall consist of copper tape with minimum overlap of 20%. However for single core armoured cables, the armouring shall constitute the metallic part of the screening.

15.16.5.4 CABLE DRUMS

Cables shall be supplied in non-returnable wooden or steel drums of heavy construction. The surface of the drum and the outer most cable layer shall be covered with water proof cover. Both the ends of the cables shall be properly sealed with heat shrinkable PVC/ rubber caps secured by 'U' nails so as to eliminate ingress of water during transportation, storage and erection. Wood preservative anti-termite treatment shall be applied to the entire drum. Wooden drums shall comply with IS: 10418.

Each drum shall carry manufacturer's name, purchaser's name, address and contract number, item number and type, size and length of cable and net gross weight stencilled on both sides of the drum. A tag containing same information shall be attached to the leading end of the cable. An arrow and suitable accompanying wording shall be marked on one end of the reel indicating the direction in which it should be rolled.

The standard length for HT power cables shall be 1000 meter for all single core cables and 750 meters for 3 core cables. The length per drum shall be subjected to a maximum tolerance of +/-5% of the standard drum length. The Employer shall have the option of rejecting cable drum with shorter lengths. One drum length of each cable size can be of non standard length (not less than 250 meter) so as to match the ordered quantity. For each size, the variance of total quantity, adding all the supplied drum lengths, from the ordered quantity, shall not exceed +/-2% and the payment shall be made based on the actual cable length supplied within this limit.

15.16.5.5 TYPE, ROUTINE AND ACCEPTANCE TESTS

All equipments to be supplied shall be of type tested design. During detailed engineering, the contractor shall submit for Owner’s approval the reports of all the type tests as listed in this specification and carried out within last ten years from the date of bid opening. These reports should be for the test conducted on the equipment similar to those proposed to be supplied under this contract and the test(s) should have been either conducted at an independent laboratory or should have been witnessed by a client.

All acceptance and routine tests as per the specification and relevant standards shall be carried out. Charges for these shall be deemed to be included in the equipment price.

The type test reports once approved for any projects shall be treated as reference. For subsequent projects of NTPC, an endorsement sheet will be furnished by the manufacturer confirming similarity and “No design Change”. Minor changes if any shall be highlighted on the endorsement sheet.

All types and sizes of cables being supplied shall be subjected to type tests, routine tests and acceptance tests as specified below and according to relevant standards.

The following type tests shall be carried out at no extra cost to NTPC, if the relevant reports are not available, on one cable of each size and/or design of HT Cables.

Size of the cable shall be decided by the employer during detailed engineering.

Type Test	Remarks
Conductor	
Resistance test	
For Armour Wires / Formed Wires	
Measurement of Dimensions	
Tensile Test	
Elongation test	For GS wires
Torsion test	For GS round wires only
Wrapping test	
Resistance test	
Mass & uniformity of Zinc Coating tests	For GS wires/formed wires only
Adhesion test	For GS wires/formed wires only
For XLPE insulation & PVC Sheath	
Test for thickness	
Tensile strength and elongation test before ageing and after ageing	
Ageing in air oven	
Shrinkage test	
Hot set test	For XLPE insulation only
Water absorption test	For XLPE insulation only
Loss of mass test	For PVC outer sheath only.
Hot deformation test	For PVC outer sheath only.
Heat shock test	For PVC outer sheath only
Thermal stability test	For PVC outer sheath only
Oxygen index test	For PVC outer sheath only
Smoke density test	For PVC outer sheath only
Acid gas generation test	For PVC outer sheath only
Flammability test as per IEC-332 Part-3 (Category -B)	For completed cable only
Insulation resistance test- Volume Resistivity method	
High voltage test	
Partial discharge test	
Bending test	
Dielectric power factor test	
a) As a function of voltage	
b) As a function of temperature	
Heating cycle test	
Impulse withstand test	

Indicative list of tests/ checks, Routine and Acceptance tests shall be as per Quality Assurance & Inspection table of H.T. Cables enclosed with this chapter.

15.16.6 Terminations & Straight Through Joints

Termination and jointing kits for 33kV, 11kV, 6.6 kV and 3.3 kV grade XLPE insulated cables shall be of proven design and make which have already been extensively used and type tested.

Termination kits and jointing kits shall be premoulded type, taped type or heat shrinkable type. 33kV, 11kV and 6.6 kV grade joints and terminations shall be type tested as per IS:13573. 3.3kV grade joints and terminations shall be type tested as per VDE0278. Critical components used in cable accessories shall be of tested and proven quality as per relevant product specification/ESI specification. Kit contents shall be supplied from the same source as were used for type testing. The kit shall be complete with the aluminium solderless crimping type cable lugs & ferrule as per DIN standard.
Straight through joint and termination shall be capable of withstanding the fault level for the system.

5.17 **REQUIREMENT OF AUXILIARY ITEMS (FOR BOTH 220 kV & 33 kV)**
5.17.1 **ALUMINIUM TUBULAR CONDUCTOR**
5.17.1.1 The aluminium tube shall be grade 63401 WP(range2) as per IS 5082.
5.17.1.2 There shall be no negative tolerance on OD and thickness of the tube. Other tolerances shall be as per IS:2678 and 2673.
5.17.1.3 Tests: In accordance with stipulations of specification routine tests shall be conducted on tubular conductor as per IS:5082. Also, the wall thickness and ovality shall be measured by ultrasonic method. In addition 0.2% proof tests on both parent material and aluminium tube after welding shall be conducted.
For 220kV
a) Size 4" IPS (EH type),
b) Outer diameter 114.20mm with no negative tolerance
c) Thickness of tube 8.51 mm with no negative tolerance
d) Cross-sectional area 2825.61 sq. mm.
e) Weight 7.7 kg/m
f) Aluminum grade 63401 WP(range 2) conforming to IS:5082
ACSR CONDUCTOR
The conductor shall be Aluminium Core Steel Reinforced (ACSR) type. The conductor shall confirm to IS:398 (Part-II) except where otherwise specified herein
MOOSE CONDUCTOR (For 220 kV Switchyard)
a) Code and standard IS 398
b) Name MOOSE ACSR
c) Overall diameter 31.77 mm
d) Weight 2.004 kg/m
e) Ultimate tensile strength 161.2 kN minimum
f) Strands and wire diameter of
- Aluminium 54 / 3.53 mm
- Steel 7 / 3.53 mm
DOG CONDUCTOR (For 33 kV ACSR Connections)
a) Code and standard IS 398
b) Name DOG ACSR
c) Overall diameter 14.15 mm
d) Weight 0.394 kg/m
e) Ultimate tensile strength 32.41 kN minimum
f) Strands and wire diameter of
- Aluminium 6 / 4.72 mm
- Steel 7 / 1.57 mm
RABBIT CONDUCTOR (For 33 kV ACSR Connections)
a) Code and standard IS 398
b) Name RABBIT ACSR
c) Overall diameter 10.05 mm
d) Weight 0.214 kg/m

e) Ultimate tensile strength 18.25 kN minimum
f) Strands and wire diameter of
- Aluminium 6 / 3.35 mm
- Steel 1 / 3.35 mm

5.17.2 **CLAMPS AND CONNECTORS**

5.17.2.1 The material of clamps and connectors shall be Aluminium alloy casting conforming to designation A6 of IS:617 for connecting to equipment terminals and conductors of aluminium. In case equipment terminals are of copper, the same clamps/connectors shall be used with 2mm thick bimetal.

5.17.2.2 The material of clamps and connectors shall be Galvanised mild steel for connecting to G.S.shield wire.

5.17.2.3 Bolts, nuts and plain washers shall be hot dip galvanised mild steel for sizes M12 and above. For sizes below M12, they shall be electro-galvanised mild steel. The spring washers shall be electro-galvanised mild steel.

5.17.2.4 All castings shall be free from blow holes, surface blisters, cracks and cavities. All sharp edges and corners shall be rounded off to meet specified corona and radio interference requirements.

5.17.2.5 They shall have same current rating as that of the connected equipment. All current carrying parts shall be at least 10 mm thick. The connectors shall be manufactured to have minimum contact resistance.

5.17.2.6 Flexible connectors, braids or laminated strips shall be made up of copper/aluminium.

5.17.2.7 Current rating and size of terminal/conductor for which connector is suitable shall be put on a suitable sticker on each component which should last atleast till erection time.

5.17.3 **INSULATORS & INSULATOR STRING HARDWARES**

5.17.3.1 Porcelain insulator shall comply IS: 731-1976 or equivalent international standard and shall be homogenous, free from laminations, cavities and other flaws or imperfections that might affect the mechanical or dielectric quality and shall be thoroughly vitrified, tough and impervious to moisture. Hollow porcelain should be in one integral piece in green & fired stage

5.17.3.2 Pin insulators shall be used on all poles in straight line and disc or shackle insulators on angle and dead end poles.

5.17.3.3 Strain insulators shall be used at line sectionalizing locations, dead end locations, major crossings and locations where the angle of deviation of line is more than 10 deg.

5.17.3.4 For 33KV, Ball & Socket type strain insulators with fittings shall be used.

5.17.3.5 The pins for insulators shall be fixed in the holes provided in the cross-arms and the pole top brackets. The insulators shall be mounted in their places over the pins and tightened. In the case of strain or angle supports, where strain fittings are provided for this purpose, one strap of the strain fittings is placed over the crossarm before placing the bolt in the hole of cross-arms. The nut of the straps shall be so tightened that the strap can move freely in horizontal direction.

5.17.3.6 The insulator hardware shall be of bolted type and shall be of forged steel except for insulator cap, which can be of malleable cast iron. It shall also generally meet the requirements of clamps and connectors as specified above.

5.17.3.7 In one span, Tension string assembly at one end shall be supplied with suitable turn buckle.

5.17.4 **DISC INSULATOR**

The disc insulator shall meet the following parameters:
a. Type : Antifog type insulator
b. Size of insulator : 255x145
c. Electro mechanical strength : 120kN
d. Leakage distance (mm) : 430mm minimum or as required to meet the total creepage.
e. Power frequency withstand voltage: 85 kV (dry), 50kV (wet)

5.17.5 **INSULATOR STRING**

The insulator string shall meet the following parameters

		220 KV	**33KV**
	Type	Porcelain type	Porcelain type /composite type
a	Creepage distance	8575 mm	1260 mm
b	PF withstand voltage	460 KV(rms) 1 min (dry and wet)	130 kV & 80 kV rms (dry and wet)
c	L / I withstand voltage	+/- 1050 KV	+/-170KV
d	No. of disc insulator (min.) (Porcelain type)	15 nos	4 nos.
e	Electro mechanical strength	120 KN / string-porcelain 160kN for composite type	
f	Pollution Level (as per IEC 71)	Class-III, Heavy	

5.17.6 EARTHING CONDUCTOR

a) The main conductor buried in earth shall be 40mm dia MS rod for main and auxiliary mat. The earthing conductors over the ground shall be of 75x12 mm GS flat. The earthing leads for columns and auxiliary structures, cable trenches shall be of 75x12 mm GS flat. The earthing of the lighting fixtures shall be carried out by 16 SWG wire.

b) All earthing conductors above the ground level shall be galvanised steel only.

c) Earthing terminal of each surge arrester, capacitor voltage transformer and lightning down conductors shall be directly connected to rod electrode which in turn, shall be connected to station earthing grid.

d) Earthing mat comprising of closely spaced (300mm x 300mm) conductors shall be provided at 300 mm below ground the operating handles of the isolators/earthswitch.

e) Earthing conductor shall be buried 2000mm outside the switchyard fence. Every post of the fence and gates shall be connected to earthing loop.

5.17.7 LIGHTNING PROTECTION

Direct stroke lightning protection (DSLP) shall be provided in the switchyard by LM/shield wires.

Lightning protection System down conductors shall not be connected to other conductors above ground level. Also, no intermediate earthing connection shall be made to Surge arrester, Voltage Transformer, earthing leads for which shall be directly connected to earth electrode.

Every down conductor shall be provided with a test joint at about 1000mm above ground level. The test joint shall be directly connected to the earthing system.

Down conductors shall be cleated on the structures at 2000mm interval.

The lightning protection system shall not be in direct contact with underground metallic service ducts and cables.

Lightning protection system installation shall be in strict accordance with the latest editions of Indian Electricity Rules, Indian Standards and Codes of practice and Regulations existing in the locality where the system is installed.

5.17.8 Earthwire for Lightning Protection

a) Number of strands 7 of steel
b) Strand diameter 3.66 mm
c) Overall diameter 10.98 mm
d) Weight 583 kg/km approx.
e) Ultimate tensile strength 68.4 kN minimum
f) Total cross-sectional area 73.65 sq.mm.
g) Calculated d.c. resistance 2.5 ohms/km at 20 deg.C.
h) Direction of lay of outer layer Right hand
i) Protective coating for storage Boiled linseed oil to avoid wet storage stains (white rust)

The earth wire shall be preformed and post formed quality.

5.17.9 Earthwire Compression type tension Clamp & Flexible Copper Bond

5.17.9.1 TENSION CLAMP FOR EARTHWIRE

The details shall be as per IS:2121 part-3. Compression type tension clamp shall be used to hold 7/3.66 mm galvanised steel earthwire. Anchor shackle shall be supplied which shall be suitable for attaching the tension clamp to strain plates. The strain plates supplied with the towers will have a minimum thickness of 8 mm with a hole of 17.5 mm diameter. Suitable lugs for jumper connection shall also be supplied alongwith necessary bolts and nuts.

The dimensions and the dimensional tolerance of the tension clamp shall be as given below:

Item	Dimensions before compression		Dimension after Compression	
	Inner Dia.(mm)	outer Dia. (mm)	Corner to Corner width (mm)	Face to face Width (mm)
Steel Dead-end	11.1±0.2	21±0.5	20.2±0.5	17.5±0.5

5.17.9.2 Flexible copper bond: as detailed in IS: 2121 Part 3. The flexible copper bond shall be fitted with 2 nos. Tinned copper connecting lugs which will be pressed jointed to either ends of the bond. One lug shall be suitable for 12 mm dia bolt and other for 16 mm dia bolt. The complete assembly shall also include one 16 mm dia 40 mm lug with MS bolt hot dip galvanised with nut and lock washer.

5.17.10 BUSHINGS, HOLLOW COLUMN INSULATORS, SUPPORT INSULATORS, AND DISC INSULATORS

5.17.10.1 Bushings shall be manufactured and tested in accordance with IS:2099& IEC:60137 while hollow column insulators shall be manufactured and tested in accordance with IEC 62155/IS 5284. The support insulators shall be manufactured and tested as per IS:2544 / IEC 60168/IEC 60273. The insulators shall also conform to IEC 60815 as applicable having alternate long and short sheds.

Support insulators/ bushings/ hollow column insulators shall be designed to have ample insulation, mechanical strength and rigidity for the conditions under which they will be used.

5.17.10.2 Porcelain used shall be homogenous, free from laminations, cavities and other flaws or imperfections that might affect the mechanical or dielectric quality and shall be thoroughly vitrified, tough and impervious to moisture.

5.17.10.3 Glazing of the porcelain shall be uniform brown in colour, free form blisters, burns and other similar defects.

5.17.10.4 The design of the insulator shall be such that stresses due to expansion and contraction in any part of the insulator shall not lead to deterioration. All ferrous parts shall be hot dip galvanised.

5.17.10.5 Post type insulators shall consist of a porcelain part permanently secured in metal base to be mounted on supporting structures. They shall be capable of being mounted upright. They shall be designed to withstand all shocks to which they may be subjected to during operation of the associated equipment.

5.17.10.6 Bushing porcelain shall be robust and capable of withstanding the internal pressures likely to occur in service. The design and location of clamps, the shape and the strength of the porcelain flange securing the bushing to the tank shall be such that there is no risk of fracture. All portions of the assembled porcelain enclosures and supports other than gaskets, which may in any way be exposed to the atmosphere shall be composed of completely non hygroscopic material such as metal or glazed porcelain.

5.17.10.7 All iron parts shall be hot dip galvanised and all joints shall be air tight. Surface of joints shall be trued, porcelain parts by grinding and metal parts by machining. Insulator/ bushing design shall be such as to ensure a uniform compressive pressure on the joints.

5.17.10.8 In accordance with the requirements stipulated elsewhere, bushings, hollow column insulators and support insulators shall conform to type tests and shall be subjected to routine tests and acceptance test/ sample test in accordance with relevant standards.

5.17.11 **SPACERS**

5.17.11.1 Spacers shall conform to IS: 10162. They shall be of non-magnetic material except nuts and bolts, which shall be of hot dip galvanised mild steel.

5.17.11.2 Spacers shall generally meet the requirements of clamps and connectors as specified above. Its design shall take care of fixing and removing during installation and maintenance.

5.17.11.3 In addition to the type tests as per IS:10162, clamp slip test should have been conducted. In this test the sample shall be installed on test span of twin/quad bundle string at a tension of 44.2 kN (4500 kg). One of the clamps when subjected to a longitudinal pull of 2.5 kN (250 kg) parallel to the axis of conductor shall not slip, i.e. permanent displacement between conductor and clamp after the test shall not exceed 1.0 mm. This test should have been performed on all other clamps of the sample.

5.17.12 **CABINETS, BOXES, KIOSKS, PANELS, ETC.**

5.17.12.1 All types of control cabinets, junction boxes, marshaling boxes, lighting panels, terminal boxes, operating mechanism boxes, Kiosks etc. shall generally conform to IS:5039, IS:8623 and IEC:439 as applicable.

5.17.12.2 They shall be of Stainless steel or Aluminium. The thickness of Stainless steel sheet shall be 1mm.The thickness of aluminium shall be 3mm and shall provide rigidity. Top of the boxes shall be sloped towards rear of the box. However, the junction and switch boxes shall be of hot dip galvanised sheet steel of 1.6mm thickness. The paint shade shall be grey RAL 9002 outside and glossy white inside.

5.17.12.3 The cabinets/boxes/kiosks/panels shall be free standing or wall mounting or pedestal mounting type. They shall have hinged doors with padlocking arrangement. All doors, removable covers and plates shall be gasketed all around with neoprene gaskets.

5.17.12.4 The degree of protection of all the outdoor boxes shall not be less than IP 55 as per IS 2147.

5.17.12.5 The cable entry shall be from bottom, for which removable gasketed cable gland plates shall be provided.

5.17.12.6 Suitable 240V, single phase, 50Hz ac heaters with thermostats controlled by switch and fuse shall be provided to maintain inside temperature 10deg. above the ambient.

5.17.12.7 The size of enclosure and the layout of equipment inside shall provide generous clearances. Each cabinet/box/kiosk/panel shall be provided with a 15A, 240V ac, 2 pole, 3 pin industrial grade receptacle with switch. For incoming supply, MCB of suitable rating shall be provided. Illumination of each compartment shall be with door operated incandescent lamp. All control switches shall be of rotary switch type.

5.17.12.8 Each cabinet/box/kiosk/panel shall be provided with two earthing pads to receive 75mmx12mm/50mmx6mm GS flat. The connection shall be bolted type with two bolts per pad. The hinged door shall be connected to body using flexible wire. The cabinets/ boxes/ kiosks/ panels shall also be provided with danger plate, and internal wiring diagram pasted on inside of the door. The front label shall be on a 3mm thick plastic plate with white letters engraved on black background.

5.17.13 **BAY MARSHALLING BOX**

5.17.13.1 Bay Marshaling Box located at a convenient location to receive and distribute cables shall be provided as required. It shall meet all the requirements as specified for cabinets/boxes.

5.17.13.2 It shall have three separate distinct compartments for following purposes:

- To receive two incoming 415V, three phase, AC supplies controlled by 100A four pole MCBs with auto changeover provision, and to distribute five (5) three phase ac supplies controlled by 32A four pole MCBs. It shall also be provided with 63A, 3 phase 4 pin industrial grade receptacle with rotary switch.

- To receive three phase incoming from first compartment and to distribute ten (10) single phase ac supplies controlled by 16A two pole MCBs.
- 200 nos. terminal blocks in vertical formation for interlocking facility.

5.17.14 **AUXILIARY SWITCH**

The auxiliary switch shall conform of following type tests:

a) Electrical endurance test - A minimum of 1000 operations for 2A. D.C. with a time constant greater than or equal to 20 milliseconds with a subsequent examination of mV drop/ visual defects/ temperature rise test.

b) Mechanical endurance test - A minimum of 5000 operations with a subsequent checking of contact pressure test/ visual examination

c) Heat run test on contacts

d) IR/HV test, etc.

5.17.15 TERMINAL BLOCKS

5.17.15.1 They shall be non-disconnecting stud type of extensible design equivalent to Elmex type CAT-M4.

5.17.15.2 The terminal blocks shall be of min. 650 V grade, and rated to continuously carry maximum expected current. The conducting part shall be tinned or silver plated.

5.17.15.3 They shall be of moulded, non-inflammable thermosetting plastic. The material shall not deteriorate with varied conditions of temperature and humidity. The terminal blocks shall be fully enclosed with removable covers of transparent, nondeteriorating plastic material. Insulating barriers shall be provided between the terminal blocks so that the barriers do not hinder the wiring operation without removing the barriers.

5.17.15.4 The terminals shall be provided with marking tags for wiring identification.

5.17.15.5 Unless otherwise required (expected current rating) or specified, terminal blocks shall be suitable for connecting the following conductors on each side:

All CT & VT circuits - Min. four 2.5 sq.mm. copper flexible conductor

AC & DC power supply -Two 16 sq.mm. aluminium conductor Circuits

Other control circuits - Min. two 2.5 sq.mm. copper flexible conductor

5.17.15.6 The terminal blocks for CT and VT secondary leads shall be provided with test links and isolating facilities. CT secondary leads shall also be provided with short circuiting and earthing facilities.

5.17.16 **LT POWER & CONTROL CABLES**

LT Power & control cables shall be of minimum 1100 volts grade XLPE / PVC insulated conforming to IS 1554 for utilization voltages less than equal to 415 V.

All standards, specifications and codes of practice referred to herein shall be the latest editions including all applicable official amendments and revisions as on date of opening of bid. In case of conflict between this specification and those (IS codes, standards, etc.) referred to herein, the former shall prevail. All the cables shall conform to the requirements of the following standards and codes:

IS :1554 - I	PVC insulated (heavy duty) electric cables for working voltages upto and including 1100V.
IS : 3961	Recommended current ratings for cables
IS : 3975	Low carbon galvanised steel wires, formed wires and tapes for armouring of cables.
IS : 5831	PVC insulation and sheath of electrical cables.
IS:7098 (Part -I)	Cross linked polyethylene insulated PVC sheathed cables for working voltages upto and including 1100V.
IS : 8130	Conductors for insulated electrical cables and flexible cords.
IS : 10418	Specification for drums for electric cables.

IS : 10810	Methods of tests for cables.
ASTM-D -2843	Standard test method for density of smoke from the burning or decomposition of plastics.
IEC-754 (Part-I)	Tests on gases evolved during combustion of electric cables.
IEC-332	Tests on electric cables under fire conditions. Part-3: Tests on bunched wires or cables (Category-B).

The cables shall be suitable for laying on racks, in ducts, trenches, conduits and underground (buried) installation with chances of flooding by water.
All cables shall be flame retardant, low smoke (FRLS) type designed to withstand all mechanical, electrical and thermal stresses developed under steady state and transient operating conditions as specified elsewhere in this specification.
If cables are to be laid underground, laying shall be as per latest relevant IS code. Copper/aluminium conductor used in power cables shall have tensile strength as per relevant standards. Conductors shall be stranded.
XLPE insulation shall be suitable for a continuous conductor temperature of 90 deg.C and short circuit conductor temperature of 250 deg C.
PVC insulation shall be suitable for continuous conductor temperature of 70 deg C and short circuit conductor temperature of 160 deg. C.
The cable cores shall be laid up with fillers between the cores wherever necessary.
It shall not stick to insulation and inner sheath. All the cables, other than single core cables, shall have distinct extruded PVC inner sheath of black colour as per IS:5831. Single core cables shall have no Inner sheath as per IS: 7098 Part-I
For single core armoured cables, armouring shall be of copper/aluminium wires/ formed wires. For multicore armoured cables, armouring shall be of galvanised steel as follows:

Calculated nominal dia. of cable under armour	**Size and Type of armour**
Upto 13 mm	1.4mm dia GS wire
Above 13 & upto 25mm	0.8 mm thick GS formed wire / 1.6 mm dia GS wire
Above 25 & upto 40 mm	0.8mm thick GS formed wire / 2.0mm dia GS wire
Above 40 & upto 55mm	1.4 mm thick GS formed wire /2.5mm dia GS wire
Above 55 & upto 70 mm	1.4mm thick GS formed wire /3.15mm dia GS wire
Above 70mm	1.4 mm thick GS formed wire / 4.0 mm dia GS wire

The aluminium used for armouring shall be of H4 grade as per IS: 8130 with maximum resistivity of 0.028264 ohm mm^2 per meter at 20 deg C. The sizes of aluminium armouring shall be same as indicated above for galvanized steel.
The gap between armour wires / formed wires shall not exceed one armour wire / formed wire space and there shall be no cross over / over-riding of armour wire / formed wire. The minimum area of coverage of armouring shall be 90%. The breaking load of armour joint shall not be less than 95% of that of armour wire / formed wire. Zinc rich paint shall be applied on armour joint surface of GS wire / formed wire.
Outer sheath shall be of PVC as per IS: 5831 & black in colour for power cables. In addition to meeting all the requirements of Indian standards referred to, outer sheath of all the cables shall have the following FRLS properties.
(a.) Oxygen index of min. 29 (as per IS 10810 Part-58).
(b.) Acid gas emission of max. 20% (as per IEC-754-I).
(c.) Smoke density rating shall not be more than 60 % (as per ASTMD-2843).

Cores of the cables shall be identified by colouring of insulation. Following colour scheme shall be adopted:
1 core - Red, Black, Yellow or Blue
2 core - Red & Black
3 core - Red, Yellow & Blue
4 core - Red, Yellow, Blue and Black
For reduced neutral conductors (in case of power cable), the core shall be black.
For control cables having more than 5 cores, core identification shall be done by numbering the insulation of cores sequentially, starting by number 1 in the inner layer (e.g. say for 10 core cable, core numbering shall be from 1 to 10). The number shall be printed in Hindu-Arabic numerals on the outer surfaces of the cores. All the numbers shall be of the same colour, which shall contrast with the colour of insulation. The colour of insulation for all the cores shall be grey only. The numerals shall be legible and indelible. The numbers shall be repeated at regular intervals along the core, consecutive numbers being inverted in relation to each other. When the number is a single numeral, a dash shall be placed underneath it. If the number consists of two numerals, these shall be disposed one below the other and a dash placed below the lower numeral. The spacing between consecutive numbers shall not exceed 50 mm.

In addition to manufacturer's identification on cables as per IS, following marking shall also be provided over outer sheath.
(a.) Cable size and voltage grade - To be embossed
(b.) Word 'FRLS' at every 5 metre - To be embossed
(c.) Sequential marking of length of the cable in metres at every one metre
-To be embossed / printed
The embossing shall be progressive, automatic, in line and marking shall be legible and indelible.
All cables shall meet the fire resistance requirement as per Category-B of IEC 332 Part-3.
Allowable tolerances on the overall diameter of the cables shall be +\-2 mm maximum, over the declared value in the technical data sheets.
Repaired cables shall not be accepted. Pimples, fish eye, blow holes etc. are not acceptable.
Control cables shall be sized based on the following considerations:
(a) The minimum conductor cross-section shall be 1.5 sq.mm.
(b) The minimum number of spare cores in control cables shall be as follows:

No. of cores in cable	**Min. No. of spare cores**
2C, 3C	NIL
5C	1
7C-12C	2
14C & above	3

For a fuse protected circuit, cable should be sized to withstand the let out energy of the fuse. For breaker controlled feeder, cable shall be capable of withstanding the system fault current level for total breaker tripping time inclusive of relay pickup time.

CONSTRUCTIONAL FEATURES FOR LT POWER CABLES

1.1 KV grade XLPE power cables shall have compacted aluminium/ copper conductor, XLPE insulated, PVC inner-sheathed (as applicable), armoured/ unarmoured, PVC outer-sheathed conforming to IS:7098. (Part-I). Cables which are directly buried shall be armoured.
1.1KV grade PVC power cables shall have aluminium/copper conductor (compacted type for sizes above 10 sq.mm), PVC Insulated, PVC inner sheathed (as applicable) armoured/ unarmoured, PVC outer-sheathed conforming to IS:1554 (Part-I).

CONSTRUCTIONAL FEATURES FOR LT CONTROL CABLES

1.1 KV Grade Control Cables shall have stranded copper conductor and shall be multicore PVC or XLPE insulated, PVC inner sheathed, armoured / unarmoured, FRLS PVC outer sheathed conforming to IS: 1554. (Part-I).

Indicative list of tests/checks, Routine and Acceptance tests shall be as per Quality Assurance & Inspection table of LT power and control cables enclosed at relevant section.
All acceptance and routine tests as per the specification and relevant standards shall be carried out. Charges for these shall be deemed to be included in the equipment price.
All cables to be supplied shall be of type tested design.

CABLE DRUMS

(a) Cables shall be supplied in non-returnable wooden or steel drums of heavy construction. The surface of the drum and the outer most cable layer shall be covered with water proof cover. Both the ends of the cables shall be properly sealed with heat shrinkable PVC/ rubber caps secured by 'U' nails so as to eliminate ingress of water during transportation, storage and erection.
However, For Single core cables upto 6 Sq. mm size, supplier can do alternative packaging of whole Drum/Spool to eliminate ingress of water during transportation, storage and erection. Wood preservative anti-termite treatment shall be applied to the entire drum. Wooden drums shall comply with IS: 10418.
(b) Each drum shall carry manufacturer's name, purchaser's name, address and contract number, item number and type, size and length of cable and net gross weight stenciled on both sides of the drum. A tag containing same information shall be attached to the leading end of the cable. An arrow and suitable accompanying wording shall be marked on one end of the reel indicating the direction in which it should be rolled.

5.17.17 COMMUNICATION CABLE (Optic Fibre Cable)

Optic Fiber cable shall be **8/12** core, galvanized corrugated steel taped armored, fully water blocked with dielectric central member for outdoor /indoor application so as to prevent any physical damage. The cable shall have multiple single-mode or multimode fibers on as required basis so as to avoid the usage of any repeaters. The outer sheath shall have Flame Retardant, UV resistant properties and are to be identified with the manufacturer's name, year of manufacturing, progressive automatic sequential on-line marking of length in meters at every meter on outer sheath.
The cable core shall have suitable characteristics and strengthening for prevention of damage during pulling viz. Steel central number, Loose buffer tube design, 4 fibers per buffer tube (minimum), Interstices and buffer tubes duly filled with Thixotropic jelly etc. The cable shall be suitable for maximum tensile force of 2000 N during installation, and once installed, a tensile force of 1000 N minimum. The compressive strength of cable shall be 3000 N minimum & crush resistance 4000 N minimum. The operating temperature shall be -20 deg. C to 70 deg. C.
All testing of the optic fiber cable being supplied shall be as per the relevant IEC, EIA and other international standards.
Bidder to ensure that minimum 50% (but not less 4) cores are kept as spare in all types of optical fiber cables
Cables shall be suitable for laying in conduits, ducts, trenches, racks and underground buried installation.
Spliced/ Repaired cables are not acceptable.
Penetration of water resistance and impact resistance shall be as per IEC standard.

Communication Cable (Modbus)

Data (Modbus) Cable to be used shall be shielded type with stranded copper conductor based on VDE 0881 . Cable shall have minimum 2 pair each with conductor size of 0.5 SQMM and core identification shall comply with DIN 47100.

Cable shall be flame retardant according to IEC 60332-1-2. or equivalent Standard Surge protection device to be provided shall be approved from UL/CSA or any national/international approved lab.

5.17.18 Instrumentation Cables

Common Requirement

Property	Requirement
Voltage grade	225 V (peak value)
Codes and standard	All instrumentation cables shall comply with VDE 0815, VDE 0207, Part 4, Part 5, Part 6, VDE 0816, VDE 0472, SEN 4241475, ANSI MC 96.1, IS-8784, IS-10810 (latest editions) and their amendments read along with this specification.
Continuous operation suitability	At 70 deg. C for all types of cables
Progressive automatic on-line sequential marking of length in meters	To be provided at every one meter on outer sheath.
Marking to read 'FRLS	To be provided at every 5 meters on outer sheath
Allowable Tolerance on overall diameter	+/- 2 mm (maximum) over the
Variation in diameter	Not more than 1.0 mm throughout the length of cable.
Ovality at any cross-section	Not more than 1.0 mm
Others	a) Durable marking at intervals not exceeding 625 mm shall include manufacturer's name, insulation material, conductor's size, number of pairs, voltage rating, type of cable, year of manufacturer to be provided. b) Cables shall be suitable for laying in conduits, ducts, trenches, racks and underground-buried installation c) Repaired cables shall not be acceptable.
Color	The outer sheath shall be of blue Blue

Specific Requirement

	Property	Requirement
	Type of cable	F and G Type cables
A. Conductors		
	Cross section area	0.5 sq. mm
	Conductormaterial	High conductivity Annealed bare copper
	Colour code	As per VDE-815
	Conductor Grade	Electrolytic
	No & dia of strands	7x0.3 mm (nom)
	No. of Pairs	4,8,12,16,24,48
	Max. conductor resistance per Km (in ohm) at 20 deg. C	73.4 (loop)
	Reference Standard	VDE 0815
B. Insulation		
	Material	Extruded PVC type YI 3

	Thickness in mm (Min/Nom/Max)	0.25/0.3/0.35
	Volume Resistivity(Min) in ohm-cm	1 x 1014 at 20 deg. C & 1x1011 at 70 deg. C.
	Reference	VDE 0207 Part 4
	Core diameter above insulation	Suitable for cage clamp connector
C. Pairing and Twisting		
	Single layer of binder tape on each pair provided	Yes
	Bunch(Unit formation) for more than 4P	To be provided
	Conductor /pair identification as per VDE081	To be provided
D. Shielding		
	Type of shielding	Al-Mylar tape
	Individual pair shielding	To be provided for F-type cable
	Minimum thickness of Individual pair shielding	28 micron
	Overall cable assembly shielding	To be provided
	Minimum thickness of Overall cable assembly shielding	55 micron
	Coverage Overlapping	100% coverage with 20% overlapping
	Drain wire provided for individual shield	Yes (for F-type) Size=0.5mm2, No.of strands=7, Dia of strands =0.3 mm, Annealed Tin coated copper
	Drain wire provided for overall shield	Yes. Size=0.5 mm2, No.of strands=7,Dia of strands=0.3mm Annealed Tin coated copper
E. Fillers		
	Non-hygroscopic, flame retardant	To be provided
F. Outer Sheath		
	Material	Extruded PVC compound YM1 with FRLS properties
	Minimum Thickness at any point	1.8 mm
	Nominal Thick-ness at any point	>1.8 mm
	Resistant to water, fungus, termite & rodent attack	Required
	Minimum Oxygen index as per ASTMD-2863	29%
	Minimum Temperature index as per ASTMD- 2863	250 deg.C
	Maximum acid gas generation by weight as per IEC-60754-1	20%

	Maximum Smoke Density Rating as per ASTMD-2843	Maximum 60% To be provided (defined as the average area under the curve when the results of smoke density test plotted on a curve indicating light absorption vs. time as per ASTMD- 2843)
	Reference standard	VDE207 Part 5,VDE-0816
G. Electrical parameters		
	Mutual Capacitance Between Conductors At 0.8khz (max)	120 nF/km for F type 100 nF/km for G-type
	Insulation Resistance(Min.)	100 M Ohm/Km
	Cross Talk Figure (Min.) At 0.8 Khz	60 dB
	Characteristic Impedance (Max) At 1 Khz	320 OHM FOR F-TYPE 340 OHM FOR G-TYPE
	Attenuation Figure At 1 Khz (Max)	1.2 db/km
H. Complete Cable		
	Complete Cable assembly	Shall pass Swedish Chimney test as per SENSS 4241475 class F3.
	Flammability	Shall pass flammability as per IEEE-383 read in conjunction to this specification
I. Tests		
	Routine & Acceptance tests	Refer Type Test requirement of Specification for C & I System
	Type tests	
J. Cable Drum		
	Type	Non-returnable wooden drum (wooden drum to be constructed from seasoned wood free from defects with wood preservative applied to the entire drum) or steel drum.
	Outermost layer covered with waterproof paper	Yes
	Painting	Entire surface to be painted
	Length	1000 m + 5% for up to & including 12 pairs 500 m + 5% for above 12 pairs

5.17.19 WIRING

5.17.19.1 All wiring shall be carried out with 1100 V grade stranded copper wires. The minimum size of the stranded conductor used for internal wiring shall be as follows:

a) All circuits except CT circuits 2.5 sq.mm

b) CT circuits 4 sq. mm (minimum number of strands shall be 3 per conductor).
5.17.19.2 All internal wiring shall be securely supported, neatly arranged readily accessible and connected to equipment terminals and terminal blocks.
5.17.19.3 Wire terminations shall be made with solderless crimping type of tinned copper lugs which firmly grip the conductor and insulation. Insulated sleeves shall be provided at all the wire terminations. Engraved core identification plastic ferrules marked to correspond with the wiring diagram shall be fitted at both ends of each wire. Ferrules shall fit tightly on the wires shall not fall off when the wires and shall not fall off when the wire is disconnected from terminal blocks.
5.17.19.4 All wires directly connected to trip circuit breaker shall be distinguished by the addition of a red coloured unlettered ferrule. Number 6 & 9 shall not be included for ferrules purposes.
5.17.19.5 All terminals including spare terminals of auxiliary equipment shall be wired upto terminal blocks. Each equipment shall have its own central control cabinet in which all contacts including spare contacts from all poles shall be wired out. Interpole cabling for all equipment's shall be carried out by the Contractor.
5.17.20 **Type tests Requirement for Auxiliary Items**
All equipment with their terminal connectors, control cabinets, main protective relays, etc. as well as insulators, insulator strings with hardwares, clamps and connectors, marshalling boxes, etc.,shall conform to type tests as per relevant standards and shall be subjected to routine and acceptance tests in accordance with the requirements stipulated under respective equipment sections.

5.18 CABLE INSTALLATION METHODOLOGY

5.18.1 CODES AND STANDARDS

All standards, specifications and codes of practice referred to herein shall be the latest editions including all applicable official amendments and revisions as on date of opening of bid. In case of conflict between this specification and those (IS codes, standards, etc.) referred to herein, the former shall prevail. All work shall be carried out as per the following standards/ codes as applicable.

IS:513	Cold rolled low carbon steel sheets and strips.
IS:802	Code of practice for the use of Structural Steel in Overhead Transmission Line Towers.
IS:1079	Hot Rolled carbon steel sheet & strips
IS:1239	Mild steel tubes, tubulars and other wrought steel fIttings
IS:1255	Code of practice for installation and maintenance of power cables upto and including 33 KV rating
IS:1367 Part-13	Technical supply conditions for threaded Steel fasteners. (Hot dip galvanized coatings on threaded fasteners).
IS:2147	Degree of protection provided by enclosures for low voltage switchgear and control gear
IS:2309	Code of Practice for the protection of building and allied structures against lightning.
IS:2629	Recommended practice for hot dip galvanising of iron & steel
IS:2633	Method for testing uniformity of coating on zinc coated articles.
IS:3043	Code of practice for Earthing
IS:3063	Fasteners single coil rectangular section spring washers.
IS:6745	Methods for determination of mass of zinc coating on zinc coated iron & steel articles.

IS:8308	Compression type tubular in- line connectors for aluminium conductors of insulated cables
IS:8309	Compression type tubular terminal ends for aluminium conductors of insulated cables.
IS:9537	Conduits for electrical installation.
IS:9595	Metal - arc welding of carbon and carbon manganese steels - recommendations.
IS:13573	Joints and terminations for polymeric cables for working voltages from 6.6kv upto and including 33kv performance requirements and type tests.
BS:476	Fire tests on building materials and structures
IEEE:80	IEEE guide for safety in AC substation grounding
IEEE:142	Grounding of Industrial & commercial power systems
DIN 46267 (Part-II)	Non tension proof compression joints for Aluminium conductors.
DIN 46329	Cable lugs for compression connections, ring type ,for Aluminium conductors
VDE 0278	Tests on cable terminations and straight through joints
BS:6121	Specification for mechanical Cable glands for elastomers and plastic insulated cables.
	Indian Electricity Act.
	Indian Electricity Rules.

Equipment complying with other internationally accepted standards such as IEC, BS, DIN, USA, VDE, NEMA etc. will also be considered if they ensure performance and constructional features equivalent or superior to standards listed above. In such a case, the Bidder shall clearly indicate the standard(s) adopted, furnish a copy in English of the latest revision of the standards along with copies of all official amendments and revisions in force as on date of opening of bid and shall clearly bring out the salient features for comparison.

5.18.2 Trenches

PCC flooring of built up trenches shall be sloped for effective drainage with sump pits and sump pumps.

5.18.3 General

The cable slits to be used for motor/equipment power/control supply shall be sand filled & covered with PCC after cabling.

Sizing criteria, derating factors for the cables shall be met as per respective chapters. However for the power cables, the minimum conductor size shall be 6 sq.mm. for aluminium conductor and 2.5 sq.mm. for copper conductor cable.

Conscious exceptions to the above guidelines may be accepted under special conditions but suitable measures should be taken at such location to:

- Meet all safety requirements
- Safeguard against fire hazards, mechanical damage, flooding of water, oil accumulation, electrical faults/interferences, etc

5.18.4 EQUIPMENT DESCRIPTION

Cable trays, Fittings & Accessories

Cable trays shall be ladder/perforated type as specified complete with matching fittings (like brackets, elbows, bends, reducers, tees, crosses, etc.) accessories (like side coupler plates, etc. and hardware (like bolts, nuts, washers, G.I. strap, hook etc.) as required. Cable tray shall be ladder type for power & control cables and perforated for instrumentation cables.
Cable trays, fittings and accessories shall be fabricated out of rolled mild steel sheets free from flaws such as laminations, rolling marks, pitting etc. These (including hardware) shall be hot dip galvanized as per relevant IS.
Cable trays shall have standard width of 150 mm, 300 mm & 600 mm and standard lengths of 2.5 metre. Thickness of mild steel sheets used for fabrication of cable trays and fittings shall be 2 mm. The thickness of side coupler plates shall be 3 mm.
Cable troughs shall be required for branching out few cables from main cable route. These shall be U-shaped, fabricated of mild steel sheets of thickness 2 mm and shall be hot dip galvanised as per relevant IS. Troughs shall be standard width of 50 mm & 75 mm with depth of 25 mm

Support System for Cable Trays

Cable tray support system shall be pre-fabricated similar or equivalent to "Unistrut make".
Support system for cable trays shall essentially comprise of the two components i.e. main support channel and cantilever arms. The main support channel shall be of two types : (i) C1:- having provision of supporting cable trays on one side and (ii) C2:-having provision of supporting cable trays on both sides. The support system shall be the type described hereunder:
a. Cable supporting steel work for cable racks/cables shall comprise of various channel sections, cantilever arms, various brackets, clamps, floor plates, all hardwares such as lock washers, hexagon nuts, hexagon head bolt, support hooks, stud nuts, hexagon head screw, channel nut, channel nut with springs, fixing studs, etc.
b. The system shall be designed such that it allows easy assembly at site by using bolting. All cable supporting steel work, hardwares fitings and accessories shall be prefabricated factory galvanised.
c. The main support and cantilever arms shall be fixed at site using necessary brackets, clamps, fittings, bolts, nuts and other hardware etc. to form various arrangements required to support the cable trays. Welding of the components shall not be allowed. However, welding of the bracket (to which the main support channel is bolted) to the overhead beams, structural steel, insert plates or reinforcement bars will be permitted. Any cutting or welding of the galvansied surface shall be brushed and red lead primer, oil primer & aluminium paint shall be applied
d. All steel components, accessories, fittings and hardware shall be hot dip galvanised after completing welding, cutting, drill ing and other machining operation.
e. Support system shall be able to withstand

- weight of the cable trays
- weight of the cables (75 Kg/Metre run of each cable tray)
- Concentrated load of 75 Kg between every support span.
- Factor of safety of minimum 1.5 shall be considered.

PIPES, FITTINGS & ACCESSORIES

Pipes offered shall be complete with fittings and accessories (like tees, elbows, bends, check nuts, bushings, reducers, enlargers, coupling caps, nipples etc.) The size of the pipe shall be selected on the basis of maximum 40% fill criteria GI Pipes shall be of medium duty as per IS:1239
Duct banks shall be High Density PE pipes encased in PCC (10% spare of each size, subject to minimum one) with suitable water-proof manholes.
Hume pipes shall be NP3 type as per IS 458

Junction Boxes

Junction Boxes with IP:55 degree of protection, shall comprise of a case with hinged door constructed from cold rolled sheet steel of thickness 2mm. Top of the boxes shall be arranged to slope towards rear of the box. Gland plate shall be 3mm thick sheet steel with neoprene/synthetic rubber gaskets. All junction boxes shall be of adequate strength and rigidity, hot dip galvanised

as per relevant IS, and suitable for mounting on wall, columns, structures etc. The boxes shall include brackets, bolts, nuts, screws M8 earthing stud etc. required for installation.
Terminal blocks shall be 1100V grade, 10Amps rated, made up of unbreakable polyamide 6.6 grade. The terminals shall be screw type or screw-less (spring loaded) / cage clamp type with lugs. Marking on terminal strips shall correspond to the terminal numbering in wiring diagrams. All metal parts shall be of non-ferrous material. In case of screw type terminals the screw shall be captive, preferably with screw locking design. All terminal blocks shall be suitable for terminating on each side two (2) nos. stranded copper conductors of size upto 2.5 sq mm each. All internal wiring shall be of minimum 1.5 sq. mm cu. Conductor PVC wire.

Terminations & Straight Through Joints

Termination and jointing kits for 33kV, 11kV, 6.6 kV and 3.3 kV grade XLPE insulated cables shall be of proven design and make which have already been extensively used and type tested. Termination kits and jointing kits shall be premoulded type, taped type or heat shrinkable type. 33kV, 11kV and 6.6 kV grade joints and terminations shall be type tested as per IS:13573. 3.3kV grade joints and terminations shall be type tested as per VDE0278. Critical components used in cable accessories shall be of tested and proven quality as per relevant product specification/ESI specification. Kit contents shall be supplied from the same source as were used for type testing. The kit shall be complete with the aluminium solderless crimping type cable lugs & ferrule as per DIN standard.
Straight through joint and termination shall be capable of withstanding the fault level for the system.
1.1 KV grade Straight Through Joint shall be of proven design.

Cable glands

Cable shall be terminated using double compression type cable glands. Cable glands shall conform to BS:6121 and be of robust construction capable of clamping cable and cable armour (for armoured cables) firmly without injury to insulation.
Cable glands shall be made of heavy duty brass machine finished and nickel chrome plated. Thickness of plating shall not be less than 10 micron. All washers and hardware shall also be made of brass with nickel chrome plating Rubber components shall be of neoprene or better synthetic material and of tested quality.
Cable glands shall be suitable for the sizes of cable supplied/erected.

Cable lugs/ferrules

Cable lugs/ferrules for power cables shall be tinned copper solderless crimping type suitable for aluminium compacted conductor cables. Cable lugs and ferrules for control cables shall be tinned copper type. The cable lugs for control cables shall be provided with insulating sleeve and shall suit the type of terminals provided on the equipments. Cable lugs and ferrule shall conform to relevant standard

Trefoil clamps

Trefoil clamps for single core cables shall be pressure die cast aluminum or fibre glass or nylon and shall include necessary fixing accessories like G.I. nuts, bolts, washers, etc. Trefoil clamps shall have adequate mechanical strength to withstand the forces generated by the peak value of maximum system short circuit current.

Cable Clamps & Straps

The cable clamps required to clamp multicore cables on vertical run shall be made up of Aluminium strip of 25x3 mm size. For clamping the multicore cables, selflocking, de-interlocking type nylon clamps/straps shall be used. The clamps/straps shall have sufficient strength and shall not get affected by direct exposure to sun rays and outdoor environment

Receptacles

Receptacles boxes shall be fabricated out of MS sheet of 2mm thickness and hot dipped galvanised or of die-cast aluminium alloy of thickness not less than 2.5 mm.
The boxes shall be provided with two nos. earthing terminals, gasket to achieve IP55 degree of protection, terminal blocks for loop-in loop-out for cable of specified sizes, mounting brackets

suitable for surface mounting on wall/column/structure, gland plate etc. The ON-OFF switch shall be rotary type heavy duty, double break,AC23 category, suitable for AC supply. Plug and Socket shall be shrouded Die-cast aluminium. Socket shall be provided with lid safety cover. Robust mechanical interlock shall be provided such that the switch can be put ON only when the plug is fully engaged and plug can be withdrawn only when the switch is in OFF position. Also cover can be opened only when the switch is in OFF position.

Wiring shall be carried out with 1100 V grade PVC insulated stranded aluminium/copper wire of adequate size. The Terminal blocks shall be of 1100 V grade. The Terminal blocks shall be of 1100 V grade made up of unbreakable polymide 6.6 grade with adequate current rating and size. The welding receptacles shall be provided with inbuilt ELCB rated for suitable mA sensitivity.

Galvanising

Galvanising of steel components and accessories shall conform to IS:2629 , IS4759 & IS:2633. Additionally galvanising shall be uniform, clean smooth, continuous and free from acid spots.

The amount of zinc deposit over threaded portion of bolts, nuts, screws and washers shall be as per IS:1367 . The removal of extra zinc on threaded portion of components shall be carefully done to ensure that the threads shall have the required zinc coating on them as specified

Welding

The welding shall be carried out in accordance with IS:9595. All welding procedures and welders qualification shall also be followed strictly in line with IS:9595

5.18.5 INSTALLATION

Cable tray and Support System Installation

Cables shall run in cable trays mounted horizontally or vertically on cable tray support system which in turn shall be supported from floor, ceiling, overhead structures, trestles, pipe racks, trenches or other building structures.

Horizontally running cable trays shall be clamped by bolting to cantilever arms and vertically running cable trays shall be bolted to main support channel by suitable bracket/clamps on both top and bottom side rails at an interval of 2000 mm in general. For vertical cable risers/shafts cable trays shall be supported at an interval of 1000mm in general. Fixing of cable trays to cantilever arms or main support channel by welding shall not be accepted. Cable tray installation shall generally be carried out as per the approved guidelines/ drawings. Vendor shall design the support system along with tray, spacing etc in line with relevant standard.

The cantilever arms shall be positioned on the main support channel with a minimum vertical spacing of 300 mm unless otherwise indicated.

The contractor shall fix the brackets/ clamps/ insert plates using anchor fasteners. Minimum size of anchor fasteners shall be M 8 X 50 and material shall be stainless steel grade 316 or better. Anchor fastener shall be fixed as recommended by manufacturer and as approved by site engineer. For brick wall suitable anchor fasteners shall be used as per the recommendations of manufacturer. Make of anchor fasteners subject to QA approval.

All cable way sections shall have identification, designations as per cable way layout drawings and painted/stenciled at each end of cable way and where there is a branch connection to another cable way. Minimum height of letter shall be not less than 75 mm. For long lengths of trays, the identification shall be painted at every 10 meter. Risers shall additionally be painted/stenciled with identification numbers at every floor.

In certain cases it may be necessary to site fabricate portions of trays, supports and other non standard bends where the normal prefabricated trays, supports and accessories may not be suitable. Fabricated sections of trays, supports and accessories to make the installation complete at site shall be neat in appearance and shall match with the prefabricated sections in the dimensions. They shall be applied with one coat of red lead primer, one coat of oil primer followed by two finishing coats of aluminium paint.

Conduits/Pipes/Ducts Installation

The Contractor shall ensure for properly embedding conduit pipe sleeves wherever necessary for cabling work. All openings in the floor/ roof/ wall/ cable tunnel/ cable trenches made for conduit

installation shall be sealed and made water proof by the Contractor **either with any proven fire sealing system rated for one hour or** Modular multi-diameter cable sealing system consisting of frames, blocks, Compression wedge and its accessories. **The Cable sealing system should have been tested for fire insulation for min. 1 hr as per BS 476 and shall also provide water sealing. System shall be anti- rodent and anti- termite. #1** GI pull wire of adequate size shall be laid in all conduits before installation. Metallic conduit runs at termination shall have two lock nuts wherever required for junction boxes etc.

Conduit runs/sleeves shall be provided with PVC bushings having round edge at each end. All conduits/pipes shall have their ends closed by caps until cables are pulled. After cables are pulled, the ends of conduits/pipes shall be sealed with Glass wool/Cement Mortar/Putty to prevent entrance of moisture and foreign material

Exposed conduit/pipe shall be adequately supported by racks, clamps, straps or by other approved means. Conduits /pipe support shall be installed square and true to line and grade with an average spacing between the supports as given below, unless specified otherwise

Conduit /pipe size (dia).	Spacing
Upto 40 mm	1 M
50 mm	2.0 M
65-85 mm	2.5 M
100 mm and above	3.0 M

For bending of conduits, bending machine shall be arranged at site by the contractor to facilitate cold bending. The bends formed shall be smooth.

Junction Boxes Installation

Junction boxes shall be mounted at a height of 1200mm above floor level or as specified in the drawings and shall be adequately supported/mounted on masonry wall by means of anchor fasteners/ expandable bolts or shall be mounted on an angle, plate or other structural supports fixed to floor, wall, ceiling or equipment foundations.

Cable Installation

Cable installation shall be carried out as per IS:1255 and other applicable standards.

For Cable unloading, pulling etc following guidelines shall be followed in general :

- Cable drums shall be unloaded, handled and stored in an approved manner on hard and well drained surface so that they may not sink. In no case shall be drum be stored flat i.e. with flange horizontal. Rolling of drums shall be avoided as far as possible. For short distances, the drums may be rolled provided they are rolled slowly and in proper direction as marked on the drum. In absence of any indication, the drums may be rolled in the same direction as it was rolled during taking up the cables. For unreeling the cable, the drum shall be mounted on suitable jacks or on cable wheels and shall be rolled slowly so that cable comes out over the drum and not from below. All possible care shall be taken during unreeling and laying to avoid damage due to twist, kink or sharp bends.

Cable ends shall be provided with sealed plastic caps to prevent damage and ingress of moisture.

- While laying cable, ground rollers shall be used at every 2 meter interval to avoid cable touching ground. The cables shall be pushed over the rollers by a gang of people positioned in between the rollers. Cables shall not be pulled from the end without having intermediate pushing arrangements. Pulling tension shall not exceed the values recommended by cable manufacturer. Selection of cable drums for each run shall be so planned so as to avoid using straight through joints. Care should be taken while laying the cables so as to avoid damage to cables. If any particular cable is damaged, the same shall be repaired or changed to the satisfaction of Project Manager.

Cables shall be laid on cable trays strictly in line with cable schedule Power and control cables shall be laid on separate tiers in line with approved guidelines/drawings. The laying of different voltage grade cables shall be on different tiers according to the voltage grade of the cables. In

horizontal tray stacks, H.T. cables shall be laid on topmost tier and cables of subsequent lower voltage grades on lower tiers of trays. Single core cable in trefoil formation shall be laid with a distance of four times the diameter of cable between trefoil center lines and clamped at every two meter. All multi core cables shall be laid in touching formation.

Power and control cables shall be secured fixed to trays/support with self-locking type nylon cable straps with de-interlocking facilities. For horizontal trays arrangements, multi core power cables and control cables shall be secured at every five meter interval. For vertical tray arrangement, individual multi core power cables and control cables shall be secured at every one meter by nylon cable strap. After completion of cable laying work in the particular vertical tray, all the control cables shall be binded to trays/supports by aluminium strips at every five meter interval and at every bend.

Bending radii for cables shall be as per manufacturer's recommendations and IS: 1255.

Where cables cross roads/rail tracks, the cables shall be laid in hume pipe/ HDPE pipe.

No joints shall be allowed in trip circuits, protection circuits and CT/PT circuits. Also joints in critical equipment in main plant area shall not be permitted. Vendor shall identify and accordingly procure the cable drum length.

In each cable run some extra length shall be kept at suitable point to enable one LT/two HT straight through joints to made, should the cable develop fault at a later stage. Control cable termination inside equipment enclosure shall have sufficient lengths so that shifting of termination in terminal blocks can be done without requiring any splicing.

Wherever few cables are branching out from main trunk route troughs shall be used.

Wind loading shall be considered for designing support as well Cable trays wherever required.

Where there is a considerable risk of steam, hot oil or mechanical damage cable routes shall be protected by barriers or enclosures.

The installation work shall be carried out in a neat workman like manner & areas of work shall be cleaned of all scraps, water, etc. after the completion of work in each area every day. Contractor shall replace RCC/Steel trench covers after the Installation work in that particular area is completed or when further work is not likely to be taken up for some time

Separation

At least 300mm clearance shall be provided between :

- HT power & LT power cables,
- LT power & LT control/instrumentation cables,

Directly Buried Cables

- Cable trenches shall be constructed for directly buried cables. Construction of cable trench for cables shall include excavation, preparation of sieved sand bedding, riddled soil cover, supply and installation of brick or concrete protective covers, back filling and compacting, supply and installation of route markers and joint markers. Laying of cables and providing protective covering shall be as per IS:1255.
- RCC cable route and RCC joint markers shall be provided wherever required. The voltage grade of the higher voltage cables in route shall be engraved on the marker. Location of underground cable joints shall be indicated with cable marker with an additional inscription "Cable Joint". The marker shall project 150 mm above ground and shall be spaced at an interval of 30 meters and at every change in direction. They shall be located on both sides of road crossings and drain crossings. Top of cable marker/joint marker shall be sloped to avoid accumulation of water/dust on marker.

Cable tags shall be provided on all cables at each end (just before entering the equipment enclosure), on both sides of a wall or floor crossing, on each duct/conduit entry, and at every 20 meters in cable tray/trench runs. Cable tags shall also be provided inside the switchgear, motor control centers, control and relay panels etc. where a number of cables enter together through a gland plate.

Cable tag shall be of rectangular shape for power cables and control cables. Cable tag shall be of 2 mm thick aluminum with number punched on it and securely attached to the cable by not less

than two turns of 20 SWG GI wire conforming to IS:280. Alternatively, the Contractor may also provide cable tags made of nylon, cable marking ties with cable number heat stamped on the cable tags While crossing the floors, unarmoured cables shall be protected in conduits upto a height of 500 mm from floor level if not laid in tray.

Cable Terminations & Connections

The termination and connection of cables shall be done strictly in accordance with cable termination kit manufacturer" instructions, drawings and/or as directed by Project Manager. Cable jointer shall be qualified to carryout satisfactory cable jointing/termination. Contractor shall furnish for review documentary evidence/experience reports of the jointers to be deployed at site.

Work shall include all clamps, fittings etc. and clamping, fitting, fixing, plumbing, soldering, drilling, cutting, taping, preparation of cable end, crimping of lug, insulated sleeving over control cable lugs, heat shrinking (where applicable), connecting to cable terminal, shorting and grounding as required to complete the job to the satisfaction of the Project Manager.

The equipment will be generally provided with undrilled gland plates for cables/conduit entry. The Contractor shall be responsible for punching of gland plates, painting and touching up. Holes shall not be made by gas cutting. The holes shall be true in shape. All cable entry points shall be sealed and made vermin and dust proof. Unused openings shall be effectively sealed by 2mm thick aluminium sheets.

Control cable cores entering control panel/switchgear/MCC/miscellaneous panels shall be neatly bunched, clamped and tied with self-locking type nylon cable ties with de interlocking facility to keep them in position.

All the cores of the control cable to be terminated shall have identification by providing ferrules at either end of the core, each ferrule shall be indelible, printed single tube ferrule and shall include the complete wire number and TB number as per the drawings. The ferrule shall fit tightly on the core. Spare cores shall have similar ferrules with suffix sp1, sp2, ---etc along with cable numbers and coiled up after end sealing.

All cable terminations shall be appropriately tightened to ensure secure and reliable connections.

5.18.6 **BAY EQUIPMENT**

5.18.6.1 The disposition of equipment to be supplied are shown in enclosed tender drawings.

5.18.6.2 The Contractor shall prepare layout drawings and submit the same for approval of the Employer. The approval of drg. shall not absolve Contractor from his responsibility regarding designing & engineering of switchyard and Contractor shall be fully responsible for all works covered in the scope of this specification.

5.18.7 **EQUIPMENT ERECTION NOTES**

a) All support insulators, circuit breaker interrupters and other fragile equipment shall be handled with cranes with suitable booms and handling capacity.

b) Where, assemblies are supplied in more than one section, Contractor shall make all necessary mechanical and electrical connections between sections including the connection between buses. Contractor shall also do necessary adjustments/alignments necessary for proper operation of circuit breakers, isolators and their operating mechanisms. All components shall be protected against damage during unloading, transportation, storage, installation, testing and commissioning. Any equipment damaged due to negligence or carelessness or otherwise shall be replaced by the Contractor at his own expense. The contractor shall strictly follow manufacturer’s recommendations for handling and erection of equipment.

c) The slings shall be of sufficient length to avoid any damage to insulator due to excessive swing, scratching by sling ropes etc. Handling equipment, sling ropes etc. should be tested before erection and periodically thereafter for strength.

d) Bending of piping should be done by a bending machine and through cold bending only. Bending shall be such that inner diameter of pipe is not reduced. The pipes shall be thoroughly cleaned before installation.

e) Cutting of the pipes wherever required shall be such as to avoid flaring of the ends. Hence only a proper pipe cutting tool shall be used. Hack saw shall not be used.
For cleaning the inside and outside of hollow insulators only Muslin or leather cloth shall be used.
f) The rigid busbars for equipment interconnections shall have rigid connections at one end and expansion / flexible at the other end. The tubular aluminium connections shall have not more than one joint per span. Since no wastages are permissible, the bidder shall work out the cut lengths of aluminum tube based on finalized layout and dispatch the same to site without requiring owners's approval. Corona bells shall be provided at the end of the rigid busbars.

5.18.8 **CABLING**

5.18.8.1 Cabling shall be on cable racks, in trenches, vertical shafts, excavated trenches for direct burial, pulled through pipes and conduits run clamped on steel structures etc. in accordance with the requirements specified elsewhere in the specification.

5.18.8.2 Cables inside the switchyard shall be laid on GI angle supports at 600mm spacing with separate tiers for control and power cables. The GI angles shall be bolted / welded to galvanized insert plates inside RCC trenches.

5.18.8.3 Cables shall be generally located adjoining the electrical equipment through the pipe insert embedded in the ground. In the case of equipment located away from cable trench either pipe inserts shall be embedded in the ground connecting the cable trench and the equipment or in case the distance is small, notch/opening shall be provided. In all these cases necessary bending radii as recommended by the cable supplier shall be maintained.

5.18.8.4 Cabling in the control room shall be done on ladder type cable trays with supports at an interval of 2000mm.

5.18.8.5 All interpole cables (both power & control circuit) for equipments shall be laid in cable trenches/G.I. Conduit Pipe of NB 50/100mm which shall be burried in the ground at a depth of 300mm.

5.18.9 **EARTHING SYSTEM**

a) EARTHING NOTES FOR SWITCHYARD

i. **GENERAL**

Earthing of operating boxes, cubicles shall be done by 50 X 6 mm GS flat while cable trenches, equipments and structure by 75 X 12 mm GS flat.

ii. Neutral points of systems of different voltages, metallic enclosures and frame works associated with all current carrying equipments and extraneous metal works associated with electric system shall be connected to a single earthing system unless stipulated otherwise.

iii. Earthing system installation shall be in strict accordance with the latest editions of Indian Electricity Rules, relevant Indian Standards and Codes of practice and Regulations existing in the locality where the system is installed.

b) **DETAILS OF EARTHING SYSTEM**

Item	**Size**	**Material**
Main Earthing conductor	40mm dia rod	Mild steel
Conductor above ground & earthing leads (for equipment)	75X12/50X6 mm	GS
Rod Electrode	40mm dia, 3000mm	Mild steel
Pipe Electrode	40mm dia, 3000mm	GS
G.I. Earthwire	7/8 SWG	GI

c) For Step and Touch Potential the following parameters shall be considered
i) Current distribution factor – 1 (one)
ii) Duration of fault current – 0.5 sec
iii) Human body weight – 50kg

d) Grid resistance shall be less than 1(one) ohm.

e) **EARTHING CONDUCTOR LAYOUT**

i. Earthing conductors in outdoor areas shall be buried atleast 600mm below finished grade level unless stated otherwise.

ii. Spacing between rod electrodes shall be provided based on the earthmat design calculations.

iii. Wherever earthing conductors cross cable trenches, underground service ducts, pipes, tunnels, railway tracks etc., it shall be laid atleast 300mm below them and shall be re-routed in case it fouls with equipment/structure foundations.

iv. Tap connections from the earthing grid to the equipment/structure to be earthed, shall be terminated on the earthing terminals of the equipment/structure, if the equipment is available at the time of laying the grid.

Otherwise, “earth insert” with temporary wooden cover or “earth riser” shall be provided near the equipment foundation/pedestal for future connections to the equipment earthing terminals.

v. Earthing conductor along their run on cable trench ladder columns, beams, walls, etc. shall be supported by suitable welding/cleating at intervals of 750mm. Earthing conductors along cable trenches shall be on the wall nearer to the equipment. Wherever it passes through walls, floors etc. galvanized iron sleeves shall be provided for the passage of the conductor. Both ends of the sleeves shall be sealed to prevent the passage of water through the sleeves.

vi. Earthing conductor around the building shall be buried in earth at a minimum distance of 1500mm from the outer boundary of the building. In case high temperature is encountered at some location, the earthing conductor shall be laid minimum 1500mm away from such location.

vii. In outdoor areas, tap connections shall be brought 300mm above ground level for making connections in future, in case equipment is not available at the time of grid installations.

viii. Earthing conductors crossing the road shall be either installed in hume pipes or laid at greater depth to suit the site conditions.

ix. Earthing conductors embedded in the concrete fibre shall have approximately 50mm concrete cover.

f) EQUIPMENT AND STRUCTURE EARTHING

i. The connection between earthing pads and the earthing grid shall be made by short and direct earthing leads free from kinks and splices. In case earthing pads are not provided on the item to be earthed, same shall be provided in consultation with engineer.

ii. Metallic pipes, conduits and cable tray sections for cable installation shall be bonded to ensure electrical continuity and connected to earthing conductors at regular interval. Apart from intermediate connections, beginning points shall also be connected to earthing system.

iii. Metallic conduits shall not be used as earth continuity conductor.

iv. A separate earthing conductor shall be provided for earthing lighting fixtures, lighting poles, receptacles, switches, junction boxes, lighting conduits, etc.

v. Wherever earthing conductor crosses or runs along metallic structures such as gas, water, steam, conduits, etc. and steel reinforcement in concrete it shall be bonded to the same.

vi. Cable and cable boxes/glands, lockout switches etc. shall be connected to the earthing conductor running alongwith the supply cable which, in turn, shall be connected to earthing grid conductor at minimum two points, whether specifically shown or not.

vii. Railway tracks within switchyard area shall be bonded across fish plates and connected to earthing grid at several locations.

viii. Earthing conductor shall be buried 2000mm outside the switchyard fence. Every post of the fence and gates shall be connected to earthing loop by one lead.

ix. Flexible earthing connectors shall be provided where flexible conduits are connected to rigid conduits to ensure continuity.

x. Equipment earthing (Riser & welding of two conductors) shall be done as per standard drawing enclosed in this part.

g) **JOINTING**

i. Earthing connections with equipment earthing pads shall be of bolted type. Contact surfaces shall be free from scales, paint, enamel, grease, rust or dirt. Two bolts shall be provided for making

each connection. Equipment bolted connections, after being checked and tested, shall be painted with anticorrosive paint/compound.
ii. Connection between equipment earthing lead and between main earthing conductors shall be welded/brazed type. For rust protections, the welds should be treated with red lead and afterwards thickly coated with bitumen compound to prevent corrosion.
iii. Steel to copper connections shall be brazed type and shall be treated to prevent moisture ingression.
iv. Resistance of the joint shall not be more than the resistance of the equivalent length of the conductor.
v. All ground connections shall be made by electric arc welding. All welded joints shall be allowed to cool down gradually to atmospheric temperature before putting any load on it. Artificial cooling shall not be allowed.
vi. Bending of large diameter rod/thick conductor shall be done preferably by gas heating.
vii. All arc welding with large diameter conductors shall be done with low hydrogen content electrodes.
h) **POWER CABLE EARTHING**
Metallic sheaths and armour of all multi core power cables shall be earthed at both equipment and switchgear end. Sheath and armour of single core power cables shall be earthed at switchgear end only.

6 SWITCHYARD CIVIL WORKS DESIGN REQUIREMENT

6.1 SUBMISSIONS

The following documents shall be submitted by the vendor for approval of the BHEL/NTPC. This list is not exhaustive but indicative only:
1. G. A. drawing showing co-ordinates of various Gantry structures and facilities.
2. Drawing showing underground facilities with co-ordinates of all facilities such as Tower/LM foundations, equipment foundations, Transformer foundations R.C.C cable trenches, cable ducts, drains, sump pits, culverts, other foundations etc.
3. Proposed erection / construction scheme for various structural and civil works envisaged as per design requirement.
4. Foundation design & drawing for equipment supports, their control cubicles, bus post supports and bay marshalling kiosks.
5. Details of RCC cable trenches and duct banks with necessary precast RCC removable covers with lifting facility, sump pits, cable tray supports etc.
6. Foundation design & drawing for Solar Power Transformer as required including associated rail tracks, oil soak pits, oil separation pits, firewall etc.
7. Design & drawing of roads and drains including road/drain/trench crossings.
8. Site preparation, soil sterilization / antiweed treatment including gravel filling, but excluding major leveling as required.
9. Fencing along with gate for the switchyard extension area wherever required.
10. Modification required in the existing Switchyard control room building for installation of Control & protection panels, as applicable.
11. Structural steel fabrication drawings and Reinforcement bar bending schedules for reference.
12. Electronic soft copy of all the approved drawings/calculations in Cat-II / Cat-I.

6.2 DESIGN CRITERIA

6.2.1 General

6.2.1.1 All switchyard structures Gantry Towers & Beams, Lightning mast, Equipments supporting structures, Transformer foundations including oil pit, rail track, fire wall, cable trenches, Roads, Culvert, Drains, sewers, water supply, fencing with gates, gravel filling & antiweed treatment, disposal of soil, leveling/dressing of switchyard extension area etc. and other related works all complete, as applicable are covered in the specification.

6.2.1.2 Structures shall be designed for the most critical combinations of dead loads, imposed loads, equipment loads, crane loads, piping loads (static and dynamic), wind loads, seismic loads and temperature loads. In addition, loads and forces developed due to differential settlement shall also be considered.

6.2.2 Loading

6.2.2.1 **Dead Loads**

Dead loads shall include the weight of structure complete with finishes, fixtures and partitions and shall be taken as per IS: 875 (Part - I).

6.2.2.2 **Imposed Loads**

Imposed loads in different areas shall include live, erection, operation and maintenance loads. Equipment loads (which constitute all loads of equipment to be supported on the building frame) are not included in the imposed loads furnished below and shall be considered in addition to imposed loads.

For consideration of imposed loads on structures, IS: 875 (Part – II) "Code of practice for design loads (other than earthquake) for buildings & structures" shall be followed. The following minimum imposed loads as indicated for some of the important areas shall, however, be considered for the design. If actual expected load is more than the specified minimum load, then actual load is to be considered.

a) Roads As per IRC and MOST

b) Road Culverts and its allied structures including RCC pipes Crossings & Road Crossings of Trenches Design for Class - 'AA' loading (wheeled and tracked both) and checked for Class - 'A' loading as per IRC standards.

c) Underground structures such sumps, pits, trenches, drains etc. In addition to the earth pressure and ground water pressure, the surcharge of 2000 Kg / Sq.m shall also be considered.

d) Cable Trench Covers 400 Kg / Sq.m (General)

e) Rail Culverts As per Railway 'Bridge Rules'

6.2.3 **Equipment loads**

Loads of all equipment like Electrical control and relay panels, cable load, Pipe load (static and dynamic), Tanks, etc. shall be considered over and above the imposed loads. Cable and piping loads not less than 5 kN/sq.m hanging from the underside, shall also be considered additionally for floors where these loads are expected.

6.2.4 **Crane Loads**

For crane loads, an impact factor of 25% and lateral crane surge of 10% (of lifted weight + trolley weight) shall be considered in the analysis of frame according to the provisions of IS: 875. The longitudinal crane surge shall be 5% of the static wheel load.

Monorail load shall be considered in the analysis of frame according to provisions of IS: 875 (latest revision).

6.2.5 **Wind Load**

a) Switchyard gantries, towers, equipment supporting structures and lightning mast shall be designed as per IS: 802. The wind load calculations shall be made as per IS: 802 considering the basic wind speed (V_b) and terrain category.

b) All other structures covered under the present package shall be designed as per IS: 456 / IS: 800. The wind load calculations to be made as per IS: 875.

6.2.6 **Seismic Load**

Seismic forces shall be considered as specified in Chapter-General of this specification. Response spectrum method shall be used for the seismic analysis using at least first five modes of vibration.

6.3 Design Parameters for Gantry Towers & Beams, Lightning Mast and Equipment Supporting Structures (as applicable)

6.3.1 Gantry structure, which consists of open web towers connected by girders, shall be made of structural steel conforming to Grade IS:2062 or IS:8500 and duly galvanized conforming to IS: 2629 and IS: 4759. All joints shall be bolted connections.

6.3.2 The analysis of towers and gantries shall be carried out with combined model of critical configuration of towers and gantries using any established structural analysis software like STADD Pro. etc.
6.3.3 All bolts for connections shall be of 16mm dia conforming to IS: 12427, property class 5.6 as specified in IS: 1367 (Part 3).Nuts shall conform to I.S 1363 (Part 3) of property class 5. Foundation bolts shall conform to IS: 5624, property class 4.6 as specified in IS: 1367 (Part 3).
6.3.4 Butt splice shall be used for splicing the main members and splice shall be located away from the node point.
6.3.5 IS: 802 "Code of practice for use of structural steel in overhead transmission line towers" shall be followed for design of structures. Height & type of towers shall be established based on electrical requirements. A provision of ± 30 degree angle of deviation of line in horizontal plane and ± 20 degree deviation in vertical plane is considered and the resulting worst combination of forces shall be considered for design.

6.4 Loads and Loading Conditions

Switchyard structures shall be designed for the worst combination following loads:
1) Dead loads (load of wires/conductors, insulator, electrical equipment and structural members),
2) live loads,
3) Wind load on bus bars, shield wires, insulator strings, electrical equipment, structural members etc as per IS:802,
4) seismic loads,
5) loads due to deviation of conductor (gantries shall be checked for + 30 deg deviation in horizontal plane and ± 20 degree deviation in vertical plane),
6) loads due to unbalanced tension in conductor/wire,
7) Torsional load due to unbalanced vertical and horizontal forces,
8) Erection loads,
9) Short circuit forces including snap in case of bundled conductors, etc.

Note:
(i) The occurrence of earthquake and maximum wind pressure is unlikely to take place at the same time. The structure shall be designed for either of the two. However, temperature stresses can be ignored, as these towers are freestanding structure in open space.
(ii) Short circuit force and wind shall be considered to act simultaneously for the purpose of structure design.
(ii) Direction of wind shall be assumed such as to produce maximum stresses in any member for the combination of wind load with conductor tensions. The wind acting perpendicular and parallel to bus conductor and shield wire shall be considered separately.
(iii) The conductor tension shall be assumed as acting on only one side of the gantry for the analysis and design of switchyard gantries for both normal and short circuit condition.

6.5 Factor of safety:

The factor of safety for the design of members for switchyard structures shall be considered as 2.0 for normal condition and 1.5 for short circuit condition.

6.6 Design consideration for Equipment support:

The supporting structure for B.P.I., LA, CVT and Isolator equipment's shall be comprised of GI (ERW) pipe of grade YST:210 or of higher grade conforming to IS: 1161 & shall be designed as per IS:806 "Code of Practice for use of steel tubes in general building construction".
Minimum diameter of the pipe type support for 220kV structures shall be 200NB. The supporting structure for CT equipment shall be comprised of lattice structural steel conforming to IS 2026 and shall be designed as per IS: 802. Common raft foundation shall be provided for each pole of isolator.

6.7 Special design consideration for Lightning Mast (as applicable):

Diagonal wind condition shall be considered for Lightning Mast. Diagonal wind shall be taken as 1.2 times the wind calculated on longitudinal/transverse side. Lightning mast shall be provided with minimum two nos. of platforms as per requirement and an internal ladder for climbing purpose

shall be provided up to the platforms. Top of platform shall have grating, railing and two guard plates. The minimum width of platform shall be 900mm.
Live load of 300kg/m2 above platforms shall be considered for design of Lightning Mast.
The fabrication and erection of the switchyard works shall be carried out generally in accordance with IS: 802 and IS: 800. All materials shall be completely shop fabricated and galvanized.

6.8 Minimum Thickness of Members & Galvanization

All steel work used in construction of switchyard structures such as Towers & Beams, Lightning mast and equipment supporting structures including nuts, bolts and washers shall be galvanized. Minimum section thickness shall not be less than 4 mm. Weight of zinc coating shall be at least 0.610 kg/m2 and foundation bolts shall have heavier zinc coating of at least 0.80 kg/m2.

6.9 Design consideration for Foundation

The F.O.S. for foundation shall be 10% more than factor of safety for supporting structure i.e. 2.2 for normal condition and 1.65 for short-circuit condition

6.10 GRAVEL FILLING (AS APPLICABLE)

Gravel filling shall be provided in the switchyard extension area inside the fence as indicated in the tender drawing with broken stone filling which shall consist of two layers. The first layer shall be 75mm thick base course of 20mm of normal size and second layer shall be 75mm thick surface course of 40mm nominal size. Each layer shall be compacted by using half ton roller with 4-5 passes and suitable water sprinkling. Before laying the gravel/stone fill, the top layer of the soil shall be treated for anti-weed considering the type of weeds found in the vicinity. The anti-weed - soil sterilization details such as manufacturer's name, their specification, test certificate, etc. shall be furnished for Owner's approval. Any modification if required in the proposed anti-weed treatment chemical shall have to be done by the contractor at no extra cost to the Owner.
The contractor shall be required to furnish a performance guarantee of three years for the anti-weed treatment. This guarantee shall be commenced from the date of completion of work or date of handing over, whichever is later.

6.11 CABLE TRENCHES (AS APPLICABLE)

Cable trenches shall be provided for routing of cables as required and shall be of adequate size. The trenches located within switchyard shall project at least 300 mm above the finished formation level so that no storm water shall enter into the trench. The bottom of trench shall be provided with a longitudinal slope of 1:500. The downstream end of cable trenches shall be connected to sump pits. The precast RCC covers shall be as per tender drawing Lifting hooks shall be provided in the precast covers. Trenches shall be given a slope of 1:250 in the direction perpendicular to the run of the trenches. Angle of size 50x50x6 mm (minimum) with lugs shall be provided in the edges of RCC cable trenches and any other place where breakage of corners of concrete is expected.

6.12 SWITCHYARD DRAINS (AS APPLICABLE)

Open RCC storm water drains shall be provided on both sides of the road and inside switchyard area for proper drainage. All drains shall be designed for maximum runoff velocity of 1.8 m/sec. The thickness of side wall and bottom slab of RCC drains shall be minimum 100 mm. RCC box/pipe culvert shall be provided for road, rail and trench crossings.

6.13 SWITCHYARD ROAD (AS APPLICABLE)

All roads shall be concrete roads. The road construction shall be as per section shown in Tender Drawing and shall conform to IRC standards and MORTH Specifications for Road and Bridge Works.
The sub grade shall be consolidated with 6 to 8 passes of power road roller of 8 to 12 tonne capacity. The sub grade shall be dressed to camber and consolidated with road roller. Any undulations shall be made good and the sub grade shall be rerolled to avoid any weak or soft spot.
Granular Sub-base (GSB) of minimum 300mm thickness shall consist of close graded material conforming to Grade-II (size range 53mm to 0.075mm) as per MORTH specifications. The granular material shall be spread in layer with motor grader on prepared surface and compacted

with roller to achieve at least 98% of maximum dry density of the material. The thickness of each compacted layer shall not exceed 100mm if vibratory roller is not used.

Dry Lean Cement (DLC) concrete sub base of minimum 150mm thickness shall be laid over the granular sub-base with coarse and fine aggregate conforming to IS:383. The size of coarse aggregate shall not exceed 25mm and aggregate cement ratio shall be limited to 15:1. The cement content shall not to be less than 150 Kg/cum and optimum moisture content shall be determined during trial length construction. The concrete shall be mixed in a batching plant and its strength shall not to be less than 10 MPa at 7 days. The concrete shall be compacted preferably using double drum smooth-wheeled vibratory roller of min 8-10 tonne static weight.

The minimum dry density obtained shall be 97% of the dry density achieved during trial length construction and the density achieved at the edges (i.e. upto 0.5m from the edge) shall be not less than 95% of that achieved during trial length construction.

Cement Concrete Pavement of minimum 225mm thickness of M-35 grade concrete shall be placed with controlled deposition on the dry lean concrete subbase in panels of 2.25m x 4.5m. Construction of the concrete pavement shall include compacting, spraying of abrasion spray on the wearing course, finishing, including drilling of holes, grooves, providing all contraction, expansion, construction and longitudinal joints, dowel and tie bars, joint filler, joint sealants of specified grade (bitumen sealant of Grade-A of IS-1834) including impermeable polyethylene film of 125 microns laid flat without creases (min lap of 300mm) between concrete pavement and DLC, caulking strip, de-bonding strip, application of brush surface texture, filler, keys, admixture etc. as per MORTH specifications and instructions of the Engineer. The minimum cement content shall not be less that 350 kg per cum of concrete and shall not exceed 425 kg per cum of concrete

6.14 Switchyard Fence (as applicable)

The chain link fencing shall compromise of G.I chain link fencing with mesh size 75x75 mm and of minimum 3 mm diameter and diameter of bare galvanised wire shall not be less than 3.5 mm as per IS 278.

The chain link fencing material requirement shall confirm to IS: 2721. The chain link fence fabric shall have zinc coating of type ―medium‟ as given in IS 4826.

The G.I. chain link wire mesh will be stretched and attached by clips to 3 strands of High Tensile Spring Steel (HTSS) wire of 3.5 mm dia interwoven in chain link wire mesh and kept under tension which in turn are attached to the fence post with security nuts and bolts. On every fourth post a clamping strip will be threaded through the links of chain link and bolted to the fence post with the help of security nuts and bolts. All nuts, fasteners, bolts, clamping strips, clamps, clips, etc. shall be galvanized. Above the chain link fence three rows of galvanized barbed wire, twisted around minimum 2.5mm galvanized bare wire shall be provided in the Half Y steel post at a maximum spacing of 175 mm c/c. Reinforced barbed wire will be attached to angle iron posts vertical height 400 mm. The type of section for fence shall be as mentioned in the fencing drawing and details of scope of work of fencing in plot layouts.

All fence posts shall be 75X75X6 MS angles spaced at 2.5 m c/c distance. All corner fence posts will have two stay posts in orthogonal directions and every tenth post will have a stay post in the direction of the fence. All stay posts shall be 75X75X6 MS angles. Concrete foundations for the angle iron posts and stays shall be provided as per the drawing. Toe wall shall be provided between the fence posts all along the run of the fence with foundation as per the tender drawing. All MS angles and members used in posts shall also be galvanized in line with relevant codal provisions.

Suitable foundation/fencing arrangement shall be made in the fencing scheme to ensure intact fencing/safety in the water body/drains entry and exit points in the plot area. The same may be provided with a grid of MS angles of 75X75X6 sizes with foundation

6.15 CORROSION PROTECTION MEASURES

All structural steel and RCC members/ structures shall have to be provided with corrosion protection treatment unless specified otherwise.

6.15.1 **Structural Steel**

Corrosion Protection

i) General

a) All Painting shall be done as per approved painting scheme of the Vendors/ Manufacturers, which shall be submitted by the Bidder and as approved by the Employer. Painting scheme shall also include Item codification/ Description of all Coats of Paints for manufacturer's, from whom the Paint is intended to be procured.

b) All Steel structures (except those embedded in Concrete), unless specified otherwise shall be provided with painting as given below which is designed for a minimum maintenance free life of Ten (10) years (expected life, long range Ten (10) years & expected life, long range Ten (10) to Twenty (20) years , as per BS : 5493.

c) All Paints shall be of high build constitution.

ii) Painting of Steel Surfaces embedded in Concrete

For the portion of Steel surfaces embedded in Concrete, the surface shall be prepared by Manual Cleaning and provided with Primer Coat of Chlorinated Rubber based Zinc Phosphate Primer of Minimum 50 Micron Dry Film Thickness (DFT).

iii) Painting of Steel Surface

a) All Steel surfaces shall be provided with self curing Inorganic Zinc Silicate Primer Coat (Solid by Volume Minimum 60%) of Minimum 75 Micron Dry Film Thickness (DFT) applied over blast cleaned surface to near white metal conforming to Sa 2 ½ finish of Swedish standard SIS –05-5900.

b) Primer Coat shall be followed with the application of Intermediate Coat of Polyamide Cured pigmented Titanium Dioxide (TiO2) or Micaceous Iron Oxide (MIO) Epoxy based Paint (Solid by Volume Minimum 60%) of Minimum 75 Micron DFT. This coat shall be applied in Shop after an interval of Minimum overnight (from the application of Primer Coat).

c) Intermediate Coat shall be followed with the application of Finish Coat of Polyamide Cured colour pigmented Epoxy based paint (Solid by Volume Minimum 60%) of Minimum 75 Micron DFT. This Coat shall be applied after an interval of Minimum overnight and maximum indefinite (from the application of Intermediate Coat) either before Erection by Airless spray technique or after Erection by brush and / or spray. Colour and shade of the Coat shall be as approved by the Employer. The Finish Coat thickness of 75 Micron can be built up either in Single application at Shop or in two applications one at Shop and the other at Site.

d) Finish Coat shall be followed with the application of Final Finish Coat of Polyurethane based colour pigmented Paint (Solid by Volume Minimum 40%) of Minimum 30 Micron DFT. This Coat shall be applied within Seven (7) days (from the completion of Finish Coat) after Erection by brush and/ or spray. Colour and shade of the Coat shall be as approved by the Employer.

iv) Touch-up Painting on damaged areas

a) For Coatings damaged up to metal surface Surface preparation shall be carried out by Manual Cleaning. Minimum 6 inches adjoining area with existing Coating shall be roughened by Wire brushing, emery paper rubbing etc., for best adhesion of patch Primer. Primer Coat of self-priming Epoxy Touch-up Primer applied by brush immediately after the surface preparation. (Minimum DFT 100 Microns). Over this Primer Coat, Intermediate Coat, Finish Coat and Final Finish Coat shall be applied as covered above by brush with Intermediate Coat applied within maximum seven (7) days of application of touch up Primer.

b) For Coatings damaged up to Intermediate Coatings (i.e. where Primer Coat is intact).

Damaged area including Minimum 6 inches adjoining area with existing Coating should be roughened by wire brushing emery paper rubbing etc., for best adhesion of patch Primer without damaging the Primer Coat. Touch-up Primer, Intermediate, Finish and Final Finish Coats shall be applied as specified above for Coatings damaged up to metal surface.

v) Painting of Welded areas / painting of areas exposed after removal of temporary supports/ Touch-up Painting on damaged areas of Employer's Structures, where inter-connection, Welding/ modification etc. has been carried out by the Bidder.

a) Clean the surface to remove flux spatters and loose rust, loose Coatings in the adjoining areas of Weld seams by wire brush and emery paper.
b) Painting procedure to be followed as mentioned above for Touch-up Painting on damaged areas.
vi) Coating for Mild Steel parts in contact with Water
All mild Steel parts coming in contact with water or water vapour shall be hot dip galvanised. The Minimum Coating of zinc shall be 610 gms/ Sq. m. for galvanised Structures and shall comply with IS: 4759 and other relevant Codes. Galvanising shall be checked and tested in accordance with IS: 2629.
OR
All mild steel parts coming in contact with water or water vapour shall be pointed with sealed sprayed zinc coating, conforming to BS:5493 (Table -3, part-8) for very long (20 or more) years of maintenance interval.
vii) Gratings
All gratings shall be blast cleaned to Sa 2 ½ finish of Swedish standard SIS–05-5900 and shall be hot dip galvanised at the rate of 610 gms / Sq.M.
viii)Hand Railings and Ladders
All handrails and ladders shall be galvanised at the rate of 610 gms / Sq.M as per IS: 4736.
6.15.2 **RCC Members (Superstructure)**
The following preventive measures are required to be adopted by the bidder as minimum requirement.
i) For Indoor RCC Members
a) Dense and durable concrete is to be used. Minimum grade of concrete shall be M25.
b) Water/ cement ratio shall generally be restricted to 0.5. Plasticizer, if required may be used.
ii) For Outdoor (or exposed) RCC Members
a) Dense and durable concrete is to be used. Minimum grade of concrete shall be M25.
b) Water/ cement ratio shall generally be restricted to 0.5. Plasticizer, if required may be used.
10.03.00 **RCC Members (Underground Sub-Soil Condition)**
The type of corrosion protection measures for concrete reinforcement steel and structural steel for under ground structures/ facilities shall be as specified elsewhere in specification.
Protective measures shall be according to Geotechnical investigation and foundation system. In addition Water/ cement ratio shall generally be restricted to 0.45.
6.16 MISCELLANEOUS SPECIFICATIONS
6.16.1 Two - part polysulphide sealant conforming to IS: 12118 shall be used for sealing of joints.
6.16.2 Preformed bitumen impregnated fibre board conforming to IS: 1838 shall be used as joint filler.
6.16.3 Monorails, monorail girders and fixtures shall be provided, wherever required to facilitate erection/ maintenance of equipment.
6.16.4 The height of RCC fire protection wall between transformers shall be as per system requirement.
6.16.5 MS Angles of minimum size 50 x 50 x 6 mm with 8mm dia - 150mm Long MS lugs @ 150mm c / c shall be provided for edge protection around all cutouts / openings in floor slabs / walls, edges of drains supporting grating / pre-cast covers, edges of cable trench supporting pre-cast covers or chequered plates, edges of manhole supporting covers, around periphery of all removable pre-cast covers and any other place where breakage of corners of concrete is expected.
6.16.6 Grouting of all pockets, blockouts, sleeves and the openings around the embedment, inserts, bolts etc. and under pinning below the base / sole plate shall be with non - shrink flowable grout. Grade of grout shall be one grade higher than concrete. However minimum grade of grout shall be M - 30.
6.16.7 In areas where vehicular loads would be coming precast RCC covers of suitable thickness without perforations and designed for the vehicular loading shall be provided.

6.16.8 Anti termite chemical treatment shall be given to all vulnerable areas susceptible to termite including column pits, wall trenches, foundations of buildings, filling below the floors etc. as per IS: 6313 and other relevant Indian Standards.
6.16.9 Wherever possible minimum 900 mm high hand railing shall be provided around all floor/ roof openings, projections/ balconies, platforms, walkways etc. All handrails and ladder pipes shall be 32 mm nominal bore MS pipes (medium class) conforming to IS: 1161 and shall be galvanised as per IS: 4736 and IS: 1239. All rungs and ladders shall also be galvanised. Minimum weight of galvanising shall be 610g/ sq.m.
6.16.9 Duct banks consisting of PVC conduits for cables shall be provided with proper sealing arrangement consisting of fire retardant sealing compound.
6.16.10 Unless specified all sand filling shall be compacted to minimum 80% of the relative density and backfilled earth shall be compacted to minimum 90% of the Standard proctor density at OMC. However, sub - grade for the roads shall be compacted to minimum 95% of the Standard Proctor density at Optimum moisture content (OMC).
6.16.11 Non - shrink flowable grout shall be used for under - pinning work below base plates. Nominal thickness of grout shall be 50 mm. Non - shrink cum plasticizer admixture shall be added in the grout. Crushing strength of the grout shall generally be one grade higher than that of the base concrete. Minimum grade of grout shall be M-30.
6.16.12 Suitable expansion joints shall be provided in the longitudinal direction wherever necessary with provision of twin columns.
6.16.13 Design, construction and joints of all the structures shall be as per relevant Indian Standard Codes unless specified otherwise.
6.16.14 All foundation embedments, inserts, blockouts required for mounting of equipments and supporting any other facility like pipes etc. shall be provided.
6.16.15 All cable trenches shall be provided with suitable insert plates for fixing support angles of cable trays.
6.16.16 Earthing mat shall be provided around buildings and structures as per specifications / approved drawings.
6.16.17 Detailed scheme for dewatering shall be prepared before starting of deep excavation work. IS: 9758 shall be followed as general guidance for dewatering.
6.16.18 Broad gauge rail (52kg/m minimum) shall be used for rail tracks required for movement of Transformer.

6.17 REQUIREMENTS FOR CONCRETE

6.17.1 Structural concrete shall be of design mix complying with the relevant provisions of IS Codes or any International Code of Practice as approved by the Employer. All concreting shall be carried out using centralized batching plant, transit mixers and concrete pumps. Numbers and capacity of batching plant, transit mixers and concrete pumps to be deployed by the bidder to achieve the required progress of work shall be specified in the relevant schedules of the bid documents.
6.17.2 Minimum grade of structural concrete shall be M25 as follows conforming to IS: 456:
Blinding concrete below foundations, cable trenches shall be 75mm thick PCC of minimum grade M-7.5 and under brick foundations minimum 150mm thick PCC of minimum grade M-10.
6.17.3 Coarse and fine aggregates shall be specially selected to ensure that they are not susceptible to alkali/ chloride attack or prone to disintegration at high temperatures.
In particular, limestone aggregates shall never be used. The maximum size of coarse aggregate shall not be larger than 1/8th of narrowest dimension between reinforcement bars nor more than 20 mm.
6.17.4 Washing and screening of coarse and fine aggregates to remove fines, dirt of other deleterious materials shall be carried out by approved means if desired by the Employer.
6.17.5 The maximum water cement ratio by weight shall be 0.45 or 0.50 as specified elsewhere, including moisture in the aggregates, and slump should be suitably decided to provide good quality concrete work, as specified elsewhere in the specification.

6.17.6 **Admixture**

Admixtures may be permitted to be used in accordance with relevant IS codes to modify the rate of hardening or setting, to improve workability or as an aid to control concrete quality. The Employer reserves the right to direct the Bidder to conduct laboratory tests or use test data, or other satisfactory reference before granting approval. The cost of all tests conducted shall be borne by the Bidder. The admixture shall be used in strict accordance with the manufacturer's directions and/ or as directed by the Employer. No extra payment will be made to the Bidder on account of using admixtures.

6.17.7 Removal of air and water at the form surface shall be by vibration and rodding. Particular attention shall be paid to accurately shape the corners at the openings.

6.17.8 Point of discharge of the concrete in to the forms shall be 1500 mm above the concrete surface. Concrete shall be deposited in layers of approximately uniform level not greater than 400 mm deep unless permitted otherwise.

6.17.9 Sampling and testing of concrete shall be carried out as stated elsewhere in Technical Specification and as per relevant Indian Standard Codes.

6.17.10 **Cover to Reinforcement**

Unless indicated otherwise the clear concrete cover for reinforcement shall be as per IS Codes. The correct cover shall be maintained by cement mortar cubes or other approved means. Reinforcement for footings/ pile caps, grade beam, and slabs on subgrade shall be supported on precast concrete cover block as approved by Employer. The use of pebbles or stones as cover blocks shall not be permitted.

6.17.11 The 28 days crushing strength of cement mortar cubes/ precast concrete cover block shall be atleast equal to the specified strength of concrete in which the cubes/ blocks are embedded.

6.17.12 The minimum clear distance between reinforcing bars shall be in accordance with IS: 456 (Latest edition) or as specified elsewhere in this specification.

6.17.13 All lapping of reinforcement bars shall be by lapping as per relevant codal provisions. Prior approval of the Employer shall be taken for deciding the method of lapping the reinforcement bars.

6.18 MATERIALS

6.18.1 **Cement**

Ordinary portland cement of Grade 43 conforming to IS : 8112 or fly ash based portland pozzolana cement conforming to (IS : 1489 Part -1) with minimum 28 days compressive strength of 43N/mm^2 shall be used for all concrete construction. However, in place of fly ash based portland pozzolana cement, OPC mixed with fly ash can be used. Batching plant shall have facility for mixing fly ash. Fly ash shall conform to IS 3812 (Part I & Part II). Percentage of fly ash to be mixed in concrete shall be based on trial mix. Mix design shall be done with varying percentage of fly ash with cement.

6.18.2 **Aggregates**

a) Coarse aggregate - Coarse aggregate for concrete shall be chemically inert, hard, strong durable against weathering, of limited porosity and free from deleterious materials. It shall be properly graded. It shall meet the requirements of IS: 383.

b) Sand - Sand shall be hard, durable, clean and free from adherent coatings of organic matter and clay balls or pellets. Sand, when used as fine aggregate in concrete shall conform to IS: 383. For plaster, it shall conform to IS: 1542 and for masonry work to IS: 2116.

6.18.3 **Reinforcement Steel**

All reinforcement bars shall be TMT (Thermo Mechanically Treated) of grade Fe 500 conforming to IS: 1786 with minimum percentage elongation of 14.5 %.

Mild steel & medium tensile steel bars and hard drawn steel wire shall conform to grade - 1 of IS: 432 (Part - I). Welded wire fabric shall conform to IS: 1566.

6.18.4 **Structural Steel**

Structural steel (including embedded steel) shall be straight, sound, free from twists, cracks, flaw, laminations and all other defects. Structural steel shall be of tested quality and shall be of Mild steel of Grade 'A' upto 20mm thickness and of Grade 'B' normalised for thickness above 20 mm and shall conform to IS: 2062. High Strength low alloy steel (HSLA) conforming to IS: 8500 may also be used in place of Mild steel. Chequered plate shall conform to IS: 3502 and pipes for hand rail shall conform to medium grade IS: 1611.

All gratings shall be pressure locked/ electroforged. Minimum thickness of the grating shall be 40mm. The opening size shall not be more than 30mm x 100mm.The minimum thickness of the main bearing bar shall be 3mm. All gratings located inside the building shall be sand blasted and provided with two coats of suitable primer and two coats of finish paint(black colour) as per approved painting system. All gratings located outside the building shall be hot double dip galvanised at the rate of 610 gms / Sq. M. Supply of all structural steel shall be in Bidder's scope.

6.18.5 **Bricks**

Bricks shall be table moulded/machine made of uniform size, shape and sharp edges and shall have minimum compressive strength of 75 kg/cm^2. Burnt clay fly ash bricks and fly ash lime bricks shall conform to IS: 13757 and IS: 12894 respectively. Minimum fly ash content in fly ash based bricks shall be minimum 25%. Common burnt clay bricks shall conform to IS: 1077. In case bricks of compressive strength 75 kg/cm^2 are not available then bidder may also use hollow concrete blocks (minimum grade M 25) for super structure works and solid concrete blocks (minimum grade M 25) for substructure works.

6.18.6 **Water**

Water used for cement concrete, mortar, plaster, grout, washing of coarse aggregate, soaking of bricks, etc., shall be clean and free from oil, acids, alkalis, organic matters or other harmful substances in such amounts that may impair the strength or durability of the structure. Potable water shall generally be considered satisfactory for all masonry and concrete works, including curing. The Bidder shall carry out necessary tests in advance to prove the suitability of the water proposed to be used. When water from the proposed sources is used for making the concrete, the maximum permissible impurities, development of strength and initial setting time of concrete shall meet the requirements of IS: 456.

6.19 DRAWINGS

The successful Bidder shall first submit the structural design calculations along with general arrangement drawings for approval. After the approval of the design calculations by the BHEL/NTPC, detailed construction drawings shall be prepared and submitted for approval along with revised design calculations. Required number of sets of design calculations, drawings and documents shall be submitted by the Contractor. All documents including design calculations shall be prepared in MS office and all drawings shall be drafted using AutoCAD (Release - 2000 or higher version). During every submission one soft copy of the document shall also be submitted. When final approval is obtained from the Employer the Contractor shall submit all the documents in TWO sets of CD ROM (One + One Back - up) together with minimum three sets of distribution prints well documented and page controlled with details of Employer's approval marked thereon. Approval of drawings / documents shall not relieve the contractor of the responsibility regarding the adequacy of design and correctness of drawings.

6.20 CODES AND STANDARDS

6.20.1 All standards, specifications, acts and code of practice referred to herein shall be the latest editions including all applicable official amendments and revisions.

6.20.2 In case of conflict between this specification and those (IS standards, codes etc.) referred to here - in, the former shall prevail.

6.20.3 Some of the relevant Indian standards, Acts and Codes are referred to here below:

(a.) EXCAVATION AND FILLING

IS : 2720 (Part - II, IV TO VIII, XIV, XXI, XXIII, XXIV, XXVII TO XXIX, XL)

Methods of test for soils - determination for water content etc.

IS : 4701 Code of practice for earth work on canals.
IS : 9758 Guide lines for Dewatering during construction
IS : 10379 Code of practice for field control of moisture and compaction of soils for embankment and sub - grade.

(b.) PROPERTIES, STORAGE AND HANDLING OF COMMON BUILDING MATERIALS

IS : 280 Specification for mild steel wire for general engineering purposes.
IS : 456 Code of practice for plain and reinforced concrete.
IS : 457 Code of practice for general construction of plain & reinforced concrete for dams & other massive structures.
IS : 516 Method of test for strength of concrete.
IS : 650 Specification for standard sand for testing of cement.
IS : 1199 Methods of sampling and analysis of concrete.
IS : 1791 General requirements for batch type concrete mixers.
IS : 1838 Specification for preformed fillers for expansion
(Part - I) joints in concrete pavements and structures (non – extruding and resilient type).
IS : 2438 Specification for roller pan mixer.
IS : 2502 Code of practice for bending and fixing of bars for concrete reinforcement.
IS : 2505 General requirements for concrete vibrators, immersion type.
IS : 2506 General requirements for concrete vibrators, screed board type.
IS : 2514 Specification for concrete vibrating tables.
IS : 2645 Specification for Integral cement water proofing compounds.
IS : 2722 Specification for portable swing weigh batches for concrete. (single and double bucket type)
IS : 2750 Specification for Steel scaffolding.
IS : 2751 Code of practice for welding of mild steel plain and deformed bars for reinforced concrete construction.
IS : 3025 Methods of sampling and test waste water.
IS : 3366 Specification for Pan vibrators.
IS : 3370 (Part I to IV) Code of practice for concrete structures for the storage of liquids.
IS : 3414 Code of practice for design and installation of joints in buildings.
IS : 3550 Methods of test for routine control for water used in industry.
IS : 3558 Code of practice for use of immersion vibrators for consolidating concrete.
IS : 4014 (Parts I & II) Code of practice for steel tubular scaffolding.
IS : 4326 Code of practice for earthquake resistant design and construction of buildings.
IS : 4656 Specification for form vibrators for concrete.
IS : 4925 Specification for batching and mixing plant.
IS : 4990 Specification for plywood for concrete shuttering work.
IS : 5256 Code or practice for sealing joints in concrete lining on canals.
IS : 5525 Recommendations for detailing of reinforcement in reinforced concrete work.
IS : 5624 Specification for foundation bolts.
IS : 6461 Glossary of terms relating to cement concrete.
IS : 6494 Code of practice for water proofing of underground water reservoirs and swimming pools.
IS : 6509 Code of practice for installation of joints in concrete pavements.
IS : 7861 Code of practice for extreme weather concreting. (Parts I & II)
IS : 9012 Recommended practice for shot concreting.
IS : 9103 Specification for admixtures for concrete.
IS : 9417 Recommendations for welding cold worked steel bars for reinforced concrete construction.
IS : 10262 Recommended guidelines for concrete mix design.
IS : 11384 Code of practice for composite construction in structural steel and concrete.
IS : 12118 Specification for two - parts poly sulphide.

IS : 12200 Code of practice for provision of water stops at transverse contraction joints in masonry and concrete dams.
IS : 13311 Method of non - destructive testing of concrete.
Part - 1 Ultrasonic pulse velocity.
Part - 2 Rebound hammer.
SP : 23 Handbook of concrete mixes
SP : 24 Explanatory Handbook on IS : 456 - 1978
SP : 34 Handbook on concrete reinforcement and detailing.

(c.) CAST - IN - SITU CONCRETE AND ALLIED WORKS

IS : 280 Specification for mild steel wire for general engineering purposes.
IS : 456 Code of practice for plain and reinforced concrete.
IS : 457 Code of practice for general construction of plain & reinforced concrete for dams & other massive structures.
IS : 516 Method of test for strength of concrete.
IS : 650 Specification for standard sand for testing of cement.
IS : 1199 Methods of sampling and analysis of concrete.
IS : 1791 General requirements for batch type concrete mixers.
IS : 1838 Specification for preformed fillers for expansion (Part - I) joints in concrete pavements and structures (non - extruding and resilient type).
IS : 2438 Specification for roller pan mixer.
IS : 2502 Code of practice for bending and fixing of bars for concrete reinforcement.
IS : 2505 General requirements for concrete vibrators, immersion type.
IS : 2506 General requirements for concrete vibrators, screed board type.
IS : 2514 Specification for concrete vibrating tables.
IS : 2645 Specification for Integral cement water proofing compounds.
IS : 2722 Specification for portable swing weigh batches for concrete. (single and double bucket type)
IS : 2750 Specification for Steel scaffolding.
IS : 2751 Code of practice for welding of mild steel plain and deformed bars for reinforced concrete construction.
IS : 3025 Methods of sampling and test waste water.
IS : 3366 Specification for Pan vibrators.
IS : 3370 (Part I to IV) Code of practice for concrete structures for the storage of liquids.
IS : 3414 Code of practice for design and installation of joints in buildings.
IS : 3550 Methods of test for routine control for water used in industry.
IS : 3558 Code of practice for use of immersion vibrators for consolidating concrete.
IS : 4014 (Parts I & II) Code of practice for steel tubular scaffolding.
IS : 4326 Code of practice for earthquake resistant design and construction of buildings.
IS : 4656 Specification for form vibrators for concrete.
IS : 4925 Specification for batching and mixing plant.
IS : 4990 Specification for plywood for concrete shuttering work.
IS : 5256 Code or practice for sealing joints in concrete lining on canals.
IS : 5525 Recommendations for detailing of reinforcement in reinforced concrete work.
IS : 5624 Specification for foundation bolts.
IS : 6461 Glossary of terms relating to cement concrete.
IS : 6494 Code of practice for water proofing of underground water reservoirs and swimming pools.
IS : 6509 Code of practice for installation of joints in concrete pavements.
IS : 7861 Code of practice for extreme weather concreting. (Parts I & II)
IS : 9012 Recommended practice for shot concreting.
IS : 9103 Specification for admixtures for concrete.

IS : 9417 Recommendations for welding cold worked steel bars for reinforced concrete construction.
IS : 10262 Recommended guidelines for concrete mix design.
IS : 11384 Code of practice for composite construction in structural steel and concrete.
IS : 12118 Specification for two - parts poly sulphide.
IS : 12200 Code of practice for provision of water stops at transverse contraction joints in masonry and concrete dams.
IS : 13311 Method of non - destructive testing of concrete.
Part - 1 Ultrasonic pulse velocity.
Part - 2 Rebound hammer.
SP : 23 Handbook of concrete mixes
SP : 24 Explanatory Handbook on IS : 456 - 1978
SP : 34 Handbook on concrete reinforcement and detailing.

(d.) PRECAST CONCRETE WORKS

SP : 7 (PartVI / Sec.7))
National Building Code - Structural design of prefabrication and systems building.
IS : 10297 Code of practice for design and construction of floors and roofs using precast reinforced / prestressed concrete ribbed or cored slab units.
IS : 10505 Code of practice for construction of floors and roofs using pre - cast reinforced concrete units.

(e.) MASONRY AND ALLIED WORKS

IS : 1905 Code of Practice for Structural Safety of Buildings – Masonry walls.
IS : 2212 Code of Practice for Brickwork.
IS : 2250 Code of Practice for Preparation and use of Masonry Mortar.
SP : 20 Explanatory hand book on masonry code.

(f.) SHEETING WORKS

IS : 277 Galvanised steel sheets (plain or corrugated).
IS : 459 Unreinforced corrugated and semi - corrugated asbestos cement sheets.
IS : 513 Cold - rolled carbon steel sheets.
IS : 730 Specification for fixing accessories for corrugated sheet roofing.
IS : 1626 Specification for Asbestos cement building pipes and pipe fittings, gutters and gutter fittings and roofing fittings.
IS : 2527 Code of practice for fixing rain water gutters and down pipe for roof drainage.
IS : 3007 Code of practice for laying of asbestos cement sheets.
IS : 5913 Methods of test for asbestos cement products.
IS : 7178 Technical supply conditions for tapping screw.
IS : 8183 Bonded mineral wool.
IS : 8869 Washers for corrugated sheet roofing.
IS : 12093 Code of practice for laying and fixing of sloped roof covering using plain and corrugated galvanised steel sheets.
IS : 12866 Plastic translucent sheets made from thermosetting polyester resin (glass fibre reinforced).
IS : 14246 Specification for continuously pre - painted galvanised steel sheets and coils.

(g.) FABRICATION AND ERECTION OF STRUCTURAL STEEL WORK

IS : 2016 Specification for plain washers.
IS : 814 Specification for covered Electrodes for Metal Arc Welding for weld steel.
IS : 1852 Specification for Rolling and Cutting Tolerances for Hot rolled steel products.
IS : 3502 Specifications for chequered plate.
IS : 6911 Specification for stainless steel plate, sheet and strip.
IS : 3757 Specification for high strength structural bolts
IS : 6623 Specification for high strength structural nuts.
IS : 6649 High Tensile friction grip washers.

IS : 800 Code of practice for use of structural steel in general building construction.
IS : 816 Code of practice for use of Metal Arc Welding for General Construction.
IS : 4000 Code of practice for assembly of structural joints using high tensile friction grip fasteners.
IS : 9595 Code of procedure of Manual Metal Arc Welding of Mild Steel.
IS : 817 Code of practice for Training and Testing of Metal Arc Welders.
IS : 1811 Qualifying tests for Metal Arc Welders(engaged in welding structures other than pipes)
IS : 7215 Tolerances for fabrication steel structures.
IS : 12843 Tolerance for erection of structural steel.
IS : 4353 Recommendations for submerged arc welding of mild steel and low alloy steels.
SP : 6 (Part 1 to 7) ISI Hand book for structural Engineers.
IS : 1608 Method of Tensile Testing of Steel products other than sheets, strip, wire and tube.
IS : 1599 Method of Bend Tests for Steel products other than sheet, strip, wire and tube
IS : 802(1977) Code of practice for use of Structural Steel inOver head Transmission Line Towers.
IS : 228 Methods of chemical Analysis of pig iron, cast iron and plain carbon and low alloy steel.
IS : 2595 Code of Practice for Radio graphic testing.
IS : 1182 Recommended practice for Radiographic Examination of fusion welded butt joints in steel plates.
IS : 3664 Code of practice for Ultra sonic Testing by pulse echo method.
IS : 3613 Acceptance tests for wire flux combination for submerged Arc Welding.
IS : 3658 Code of practice for Liquid penetrant Flaw Detection.
IS : 5334 Code of practice for Magnetic Particle Flaw Detection of Welds.

(h.) PLASTERING AND ALLIED WORKS

IS : 1635 Code of practice for field slaking of Building lime and preparation of putty.
IS : 1661 Application of cement and cement lime plaster finishes.
IS : 2333 Plaster - of - paris.
IS : 2402 Code of practice for external rendered finishes.
IS : 2547 Gypsum building plaster.
IS : 3150 Hexagonal wire netting for general purpose.

(i.) WATER SUPPLY, DRAINAGE AND SANITATION

IS : 458 Specification for concrete pipes.
IS : 554 Dimensions for pipe threads, where pressure tight joints are made on thread.
IS : 651 Specification for salt glazed stoneware pipes.
IS : 774 Flushing cisterns for water closets and urinals.
IS : 775 Cast iron brackets and supports for wash basins and sinks.
IS : 778 Copper alloy gate, globe and check valves for water works purposes.
IS : 781 Cast copper alloy screw down bib taps and stop valves for water services.
IS : 782 Caulking lead.
IS : 783 Code of practice for laying of concrete pipes.
IS : 1172 Basic requirements for water supply, drainage and sanitation.
IS : 1230 Cast iron rain water pipes and fittings.
IS : 1239 Mild steel tubes, tubulars and other wrought steel fittings.
IS : 1536 Centrifugally cast (Spun) iron pressure pipes for water, gas and sewage.
IS : 1537 Vertically cast iron pressure pipes for water, gas and sewage.
IS : 1538 Cast iron fittings for pressure pipe for water, gas and sewage.
IS : 1703 Ball valves (horizontal plunger type) including float for water supply purposes.
IS : 1726 Cast iron manhole covers and frames.
IS : 1729 Sand cast iron spigot and socket, soil, water and ventilating pipes, fittings and accessories.
IS : 1742 Code of practice for building drainage.
IS : 1795 Pillar taps for water supply purposes.
IS : 1879 Malleable cast iron pipe fittings.
IS : 2064 Code of practice for selection, installation and maintenance of sanitary appliances.

IS : 2065 Code of practice for water supply in building.
IS : 2326 Automatic flushing cisterns for urinals.
IS : 2470 (Part – I & II) Code of practice for installation of septic tanks.
IS : 2501 Copper tubes for general engineering purposes.
IS : 2548 Plastic seat and cover for water - closets.
IS : 2556 (Part 1 to 15) Vitreous sanitary appliances (vitreous china).
IS : 2963 Non - ferrous waste fittings for wash basins and sinks.
IS : 3114 Code of practice for laying of cast iron pipes.
IS : 3311 Waste plug and its accessories for sinks and wash basins.
IS : 3438 Silvered glass mirrors for general purposes.
IS : 3486 Cast iron spigot and socket drain pipes.
IS : 3589 Electrically welded steel pipes for water, gas and sewage (200mm to 2000mm nominal diameter).
IS : 3989 Centrifugally cast (Spun) iron spigot and socket soil, waste and ventilating pipes, fittings and accessories.
IS : 4111 (Part I to IV) Code of practice for ancillary structure in sewerage system.
IS : 4127 Code of practice for laying of glazed stone - ware pipes.
IS : 4764 Tolerance limits for sewage effluents discharged into inland - surface waters.
IS : 4827 Electro plated coating of nickel and chromium on copper and copper alloys.
IS : 5329 Code of practice for sanitary pipe work above ground for buildings.
IS : 5382 Rubber sealing rings for gas mains, water mains and sewers.
IS : 5822 Code of practice for laying of welded steel pipes for water supply.
IS : 5961 Cast iron grating for drainage purpose.
IS : 7740 Code of practice for road gullies.
IS : 8931 Cast copper alloy fancy bib taps and stop valves for water services.
IS : 8934 Cast copper alloy fancy pillar taps for water services.
IS : 9762 Polyethylene floats for ball valves.
IS : 10446 Glossary of terms for water supply and sanitation.
IS : 10592 Industrial emergency showers, eye and face fountains and combination units.
IS : 12592 Specification for precast concrete manhole covers and frames.
IS : 12701 Rotational moulded polyethylene water storage tanks.
SP : 35 Hand book on water supply and drainage. - Manual on Sewerage and sewage treatment (Published by CPH & EEO) As updated.

(j.) PILING AND FOUNDATION

IS : 1080 Code of practice for design and construction of simple spread foundations.
IS : 1904 Code of practice for design and construction of foundations in Soils; General Requirements.
IS : 2950 (Part-I) Code of practice for designs and construction of Raft foundation.
IS : 2974 (Part -I TO V) Code of practice for design and construction of machine foundations.
IS : 6403 Code of practice for determination of Allowable Bearing pressure on Shallow foundation.
IS : 8009 Code of practice for calculation of settlement of foundation subjected to symmetrical vertical loads.
Part - I Shallow foundations.
Part – II Deep foundations.
IS : 12070 Code of practice for design and construction of shallow foundations on rocks.
DIN : 4024 Flexible supporting structures for machines with rotating machines.
VDI : 2056 Criteria for assessing mechanical vibrations of machines.
VDI : 2060 Criteria for assessing rotating imbalances in machines.

(k.) ROADS

IRC : 5 Standard specifications and Code of practice for road bridges, section - I general Features of Design.
IRC : 14 Recommended practice of 2cm thick bitumen and tar carpets.

IRC : 16 Specification for priming of base course with bituminous primers.
: 19 Standard specifications and code of practice for water bound macadam.
IRC : 21 Standard specifications and Code of practice for road bridges, section - III - Cement concrete (plain and reinforced).
IRC : 37 Guidelines for the Design of flexible pavements.
IRC : 86 Geometric Design standards for urban roads in plains.
IRC : SP : 13 Guidelines for the design of small bridges & culverts.
IRC – Publication Ministry of Surface Transport (Roads Wing), Specifications for road and bridge works.
IS : 73 Specification for paving bitumen

(l.) Loading

IS : 875 (Pt. I to V) Code of practice for design loads other than earthquake) for buildings and structures.
IS : 1893 Criteria for earthquake resistant design of structures.
IS : 4091 Code of Practice for design and construction of foundation for transmission line towers & poles.
IRC : 6 Standard specifications & code of practice for road bridges, Section - II Loads and stresses.
M.O.T. Deptt. of railways Bridge Rules.

(m.) SAFETY

IS : 3696 (Part I & II) Safety code for scaffolds and ladders.
IS : 3764 Safety code for excavation work.
IS : 4081 Safety code for blasting and related drilling \ operations.
IS : 4130 Safety code for demolition of buildings.
IS : 5121 Safety code for piling and other deep foundations.
IS : 5916 Safety code for construction involving use of hot bituminous materials.
IS : 7205 Safety code for erection on structural steelwork.
IS : 7293 Safety code for working with construction machinery.
IS : 7969 Safety code for handling and storage of building materials
IS : 11769 Guidelines for safe use of products containing asbestos.
Indian Explosives Act . 1940 as updated.

7.0 SAFETY MANAGEMENT

8.1 Vendor shall follow the site safety plan at site.
8.2 During the execution of the contract, the bidder and it's sub-vendor(if any) shall follow safety procedures for the safety of the personnel and the equipments during erection, testing, commissioning, operation and the maintenance during the contract period as per NTPC/BHEL safety plan, as per the regulatory requirements and the as per the original equipment manufacturer's recommendations.
8.3 All the expenses, charges towards compliance of the safety norms by the bidder as per the Safety Plan, Safety Policy, and the Safety Coordination Procedures are deemed to be included in the bid price. No additional claims shall be entertained towards meeting the safety requirements
8.4 Safety sign board to be provided near all construction area/ installations.

LIST OF DOCUMENTS ATTACHED WITH TENDER

1. Tentative Plant AC SLD (2 sheets)
2. Tentative Array layout
3. Existing 220KV NTPC Switchyard layout
4. Existing 220KV NTPC Switchyard SLD
5. Tentative 220 KV Equipment structure Drawing
6. Tentative existing 220KV Substation Earthing layout
7. List of NTPC approved vendors- List 1
8. List of NTPC approved vendors- List 2
9. Indicative Manufacturing and Field Quality Plans
10. Quality assurance Chapter

FIRST ANGLE PROJECTION

ALL DIMENSIONS ARE IN mm

DRAWING NO.

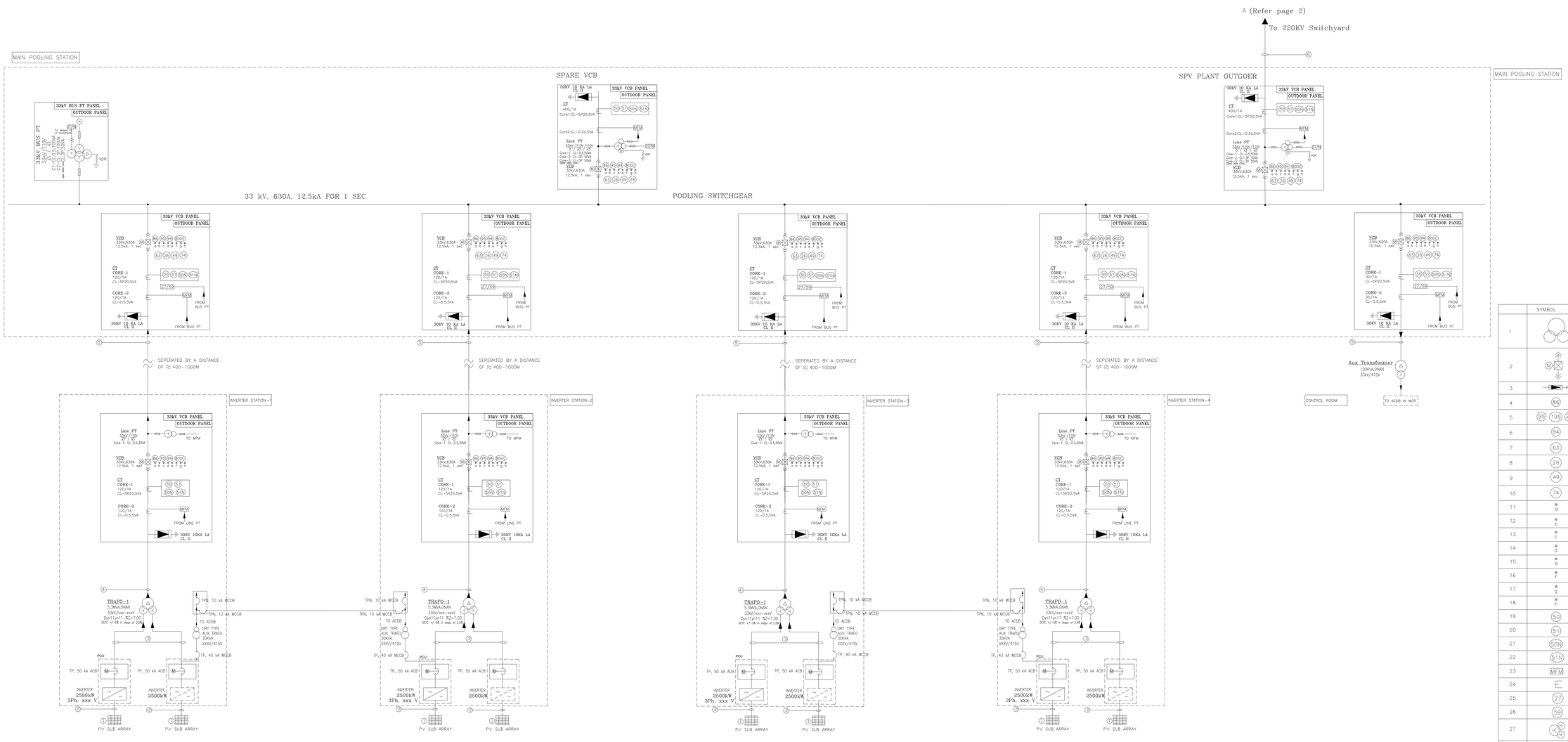

	SYMBOL	DESCRIPTION
1		INVERTER TRANSFORMER
2		VCB (OUTDOOR PANEL) 33kV,630A 12.5kA, 1 sec
3		SURGE DIVERTER, 30kV/10kA Cl II
4	86	MASTER TRIP RELAY
5	95 195 295	TRIP CIRCUIT SUPERVISION RELAY
6	94	ANTI PUMPING RELAY
7	63	BUCHHOLZ RELAY
8	26	MAGNATIC OIL LEVEL GAUGE
9	49	WINDING TEMP INDICATOR AND OIL TEMP INDICATOR
10	74	PRESSURE RELIEF DEVICE
11	a	VCB ON
12	b	VCB OFF
13	c	SPRING CHARGE
14	d	AUTO TRIP
15	e	TRIP CIRCUIT HEALTHY
16	f	SERVICE POSITION
17	g	TEST POSITION
18	h	DC FAILURE
19	50	INST OVER CURRENT RELAY
20	51	IDMT OVER CURRENT RELAY
21	50N	NEUTRAL INSTANTANEOUS OVER CURRENT RELAY
22	51N	IDMT EARTH FAULT RELAY
23	MFM	MULTI FUNCTION METER
24		CURRENT TRANSFORMER
25	27	UNDER VOLTAGE RELAY
26	59	OVER VOLTAGE RELAY
27		POTENTIAL TRANSFORMER
28		FUSE
29		LIGHTNING ARRESTOR
30	87T	TRANSFORMER DIFFERENTIAL RELAY
31		ISOLATOR WITH EARTH SWITCH
32	50LBB	LOCAL BREAKER BACKUP RELAY
33	ABT	TARIFF ENERGY METER
34	80DC	DC FAILURE INDICATION
35		INVERTER, 2500kW (Containerised system)

NOTE :

① * STRING to SMB: 1.8KV, 1RX1CX4 SQMM (for each +ve/-ve input) TINNED FLEXIBLE COPPER CONDUCTOR, EBXL XLPO INSULATED & SHEATHED SOLAR GRADE CABLE

② * SMU to PCU: 3.3KV, 1RX1CX400 SQMM (for each +ve/-ve input) ALUMINIUM CONDUCTOR, XLPE INSULATED, ARMOURED, PVC OUTER SHEATHED DC POWER CABLE

③ * PCU to TRANSFORMER: 3.3KV 6RX1CX400 SQMM (per phase) ALUMINIUM CONDUCTOR, XLPE INSULATED, UNARMOURED, PVC OUTER SHEATHED LT POWER CABLE

④ * TRANSFORMER to VCB Panel: 33kV(E), 1RX1CX240sqmm (per phase) ALUMINIUM CONDUCTOR, XLPE INSULATED, ARMOURED, PVC OUTER SHEATHED CABLE

⑤ * INVERTER STATION to MAIN POOLING STATION: 33kV(E), 1RX1CX240sqmm (per phase) ALUMINIUM CONDUCTOR, XLPE INSULATED, ARMOURED, PVC OUTER SHEATHED CABLE

⑥ * MAIN POOLING STATION to 220KV SWITCHYARD: design in vendor's scope

*CABLE SIZES MENTIONED ARE INDICATIVE ONLY, ACTUAL SIZES WILL BE AS PER CABLE SIZING CALCULATIONS

INVERTER VOLTAGE AND ACB RATING SHALL BE AS PER THE INVERTER MANUFACTURER'S STANDARD DESIGN. INVERTER VOLTAGE SHALL RANGE BETWEEN 590V TO 690V TENTATIVELY.

DRY TYPE AUXILIARY TRANSFORMER WILL BE PROVIDED IN EACH INVERTER STATION. VOLTAGE RATIOON SHALL BE AS PER PCU VOLTAGE

PCUS SHALL BE CONTAINERISED SYSTEM, SCADA SHALL BE OUTDOOR AND SMBS WILL BE PROVIDED WITH WIRELESS COMMUNICATION.

VCB BREAKERS SHALL BE OUTDOOR PANELS

NAME OF CUSTOMER/PROJECT

PROJECT : 20 MWp SOLAR PV PLANT

CUSTOMER: NTPC, GANDHAR

BHARAT HEAVY ELECTRICALS LIMITED. ELECTRONICS DIVISION, BANGALORE

	NAME	SIGN.	DATE
DRN	SP		05.06.20
CKD	SP		05.06.20
APPD	PR		05.06.20

REV.	DATE	ALTERED	CHECKED	APPROVED
03	10.08.20	SP	SP	PR
02	16.07.20	SP	SP	PR
01	22.06.20	SP	SP	PR

DEPT. SC&PV

CODE 439

FOR UNSPECIFIED-TOLERANCES REFER ED 0230499

SCALE | WEIGHT(Kg) | REF. TO ASSY. DRG. | ITEM NO. | No.OF ITEM | No.OF VAR

TITLE: SINGLE LINE DIAGRAM-AC

DRAWING NO. | REV. 03

SHEET NO. 01 | NO. OF SHEETS 02

A1 SIZE

The information on this document is the property of Bharat Heavy Electricals Limited.
It must not be used directly or indirectly in anyway detrimental to the interest of the Company.
COPYRIGHT AND CONFIDENTIAL

REF. DRG.NO. | SIGN. & DATE | INVENTORY NO.

COPYRIGHT AND CONFIDENTIAL
The information on this document is the property of Bharat Heavy Electricals Limited.
It must not be used directly or indirectly in anyway detrimental to the interest of the Company

INVENTORY NO. | SIGN & DATE | REF. DRG.NO.

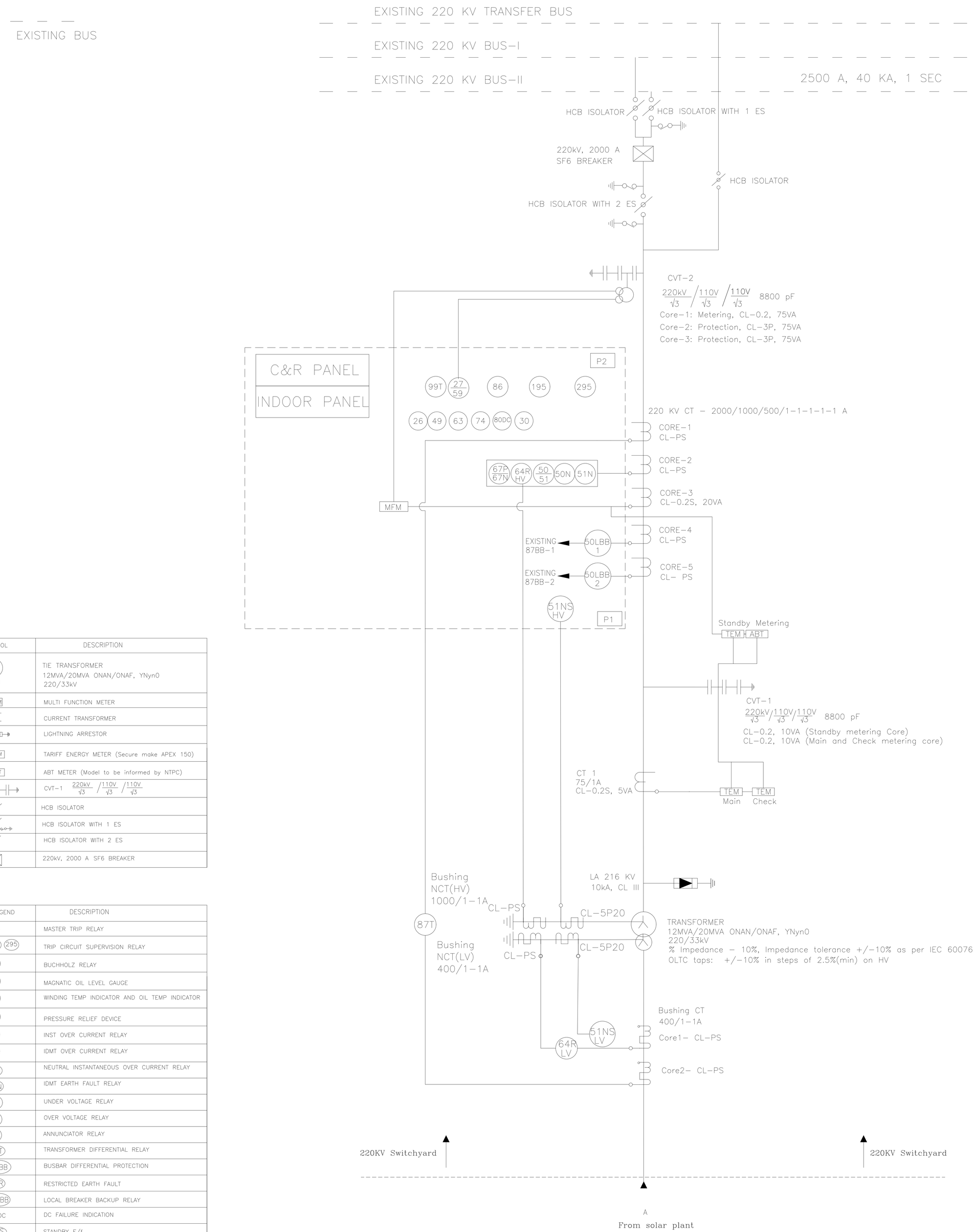

	SYMBOL	DESCRIPTION
1		TIE TRANSFORMER 12MVA/20MVA ONAN/ONAF, YNyn0 220/33kV
2	MFM	MULTI FUNCTION METER
3		CURRENT TRANSFORMER
4		LIGHTNING ARRESTOR
5	TEM	TARIFF ENERGY METER (Secure make APEX 150)
6	ABT	ABT METER (Model to be informed by NTPC)
7		CVT-1 220kV/√3 / 110V/√3 / 110V/√3
8		HCB ISOLATOR
9		HCB ISOLATOR WITH 1 ES
10		HCB ISOLATOR WITH 2 ES
11		220kV, 2000 A SF6 BREAKER

	RELAY LEGEND	DESCRIPTION
1	86	MASTER TRIP RELAY
2	95 195 295	TRIP CIRCUIT SUPERVISION RELAY
3	63	BUCHHOLZ RELAY
4	26	MAGNATIC OIL LEVEL GAUGE
5	49	WINDING TEMP INDICATOR AND OIL TEMP INDICATOR
6	74	PRESSURE RELIEF DEVICE
7	50	INST OVER CURRENT RELAY
8	51	IDMT OVER CURRENT RELAY
9	50N	NEUTRAL INSTANTANEOUS OVER CURRENT RELAY
10	51N	IDMT EARTH FAULT RELAY
11	27	UNDER VOLTAGE RELAY
12	59	OVER VOLTAGE RELAY
13	30	ANNUNCIATOR RELAY
14	87T	TRANSFORMER DIFFERENTIAL RELAY
15	87BB	BUSBAR DIFFERENTIAL PROTECTION
16	64R	RESTRICTED EARTH FAULT
17	50LBB	LOCAL BREAKER BACKUP RELAY
18	80DC	DC FAILURE INDICATION
19	51NS	STANDBY E/f
20	99T	OVERFLUXING PROTECTION
21	67P	3 PHASE DIRECTIONAL OVERCURRENT PROTETION
22	67N	EARTH FAULT DIRECTIONAL OVERCURRENT PROTECTION

PROTECTION CVT

Core No	Rated Secondary Voltage	Application	Accuracy	Burden (VA)
1	110V/sqrt (3)	Protection	3P	75
2	110V/sqrt (3)	Protection	3P	75
3	110V/sqrt (3)	Metering	0.2	75

METERING CVT

Core No	Rated Secondary Voltage	Application	Accuracy	Burden (VA)
1	110V/sqrt (3)	Main and Check metering	0.2	75
2	110V/sqrt (3)	Standby Metering	0.2	75

PROTECTION CT

Core No	Application	Curent Ratio (A)	Output Burden (VA)	Accuracy Class as per IEC 185	Min. knee point voltage (V)	Max. CT Sec. wdg. Resistance (ohms)	Max. exciting current in mA at knee point voltage	Instrument Safety Factor
1	87T	2000/1000/500/1		PS	2000/1000/500	10/5/2.5	30/60/120	
2	64RHV, 67P/67N, 50/51, 50N, 51N	2000/1000/500/1		PS	2000/1000/500	10/5/2.5	30/60/120	
3	Standby metering & Synchronizing	200/100/1	20	0.2s				<5
4	50LBB1, 87BB1	2000/1000/1		PS	2000/1000	10/5	30/60	
5	50LBB2, 87BB2	2000/1000/1		PS	2000/1000	10/5	30/60	

METERING CT

CT Ref	Application	Curent Ratio (A)	Output Burden (VA)	Accuracy Class as per IEC 185	Instrument Safety Factor
CT-1	Main and Check metering	75/1	15	0.2s	<5

NOTE : CT and PT parameters will be as per design calculations and shall comply to protection requirement.

REV.	DATE	ALTERED / CHECKED / APPROVED
03	10.08.20	SP / SP / PR
02	16.07.20	SP / SP / PR
01	22.06.20	SP / SP / PR

NAME OF CUSTOMER/PROJECT
PROJECT : 20 MWp SOLAR PV PLANT
CUSTOMER: NTPC, GANDHAR

BHARAT HEAVY ELECTRICALS LIMITED.
ELECTRONICS DIVISION, BANGALORE

DEPT. | CODE | FOR UNSPECIFIED TOLERANCES REFER ED 0230499 | SCALE | WEIGHT(kg)

TITLE: SINGLE LINE DIAGRAM-AC

	NAME	SIGN.	DATE
DRN	SP		05.06.20
CKD	SP		05.06.20
APPD	PR		05.06.20

REF. TO ASSY. DRG. | ITEM NO. | No.OF ITEM | No.OF VAR

DRAWING NO. | REV. 03 | SHEET NO. 02 | NO. OF SHEETS 02

DRAWING NO. | FIRST ANGLE PROJECTION | ALL DIMENSIONS ARE IN mm | A1 SIZE

FIRST ANGLE PROJECTION

ALL DIMENSIONS ARE IN mm

DRAWING NO.

	PLANT BOUNDARY
TOTAL AREA	104 Acres.

BIG TABLES – 1364
SMALL TABLES – 252
TOTAL – 1616

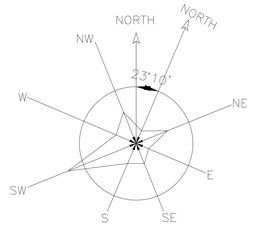

WIND ROSE

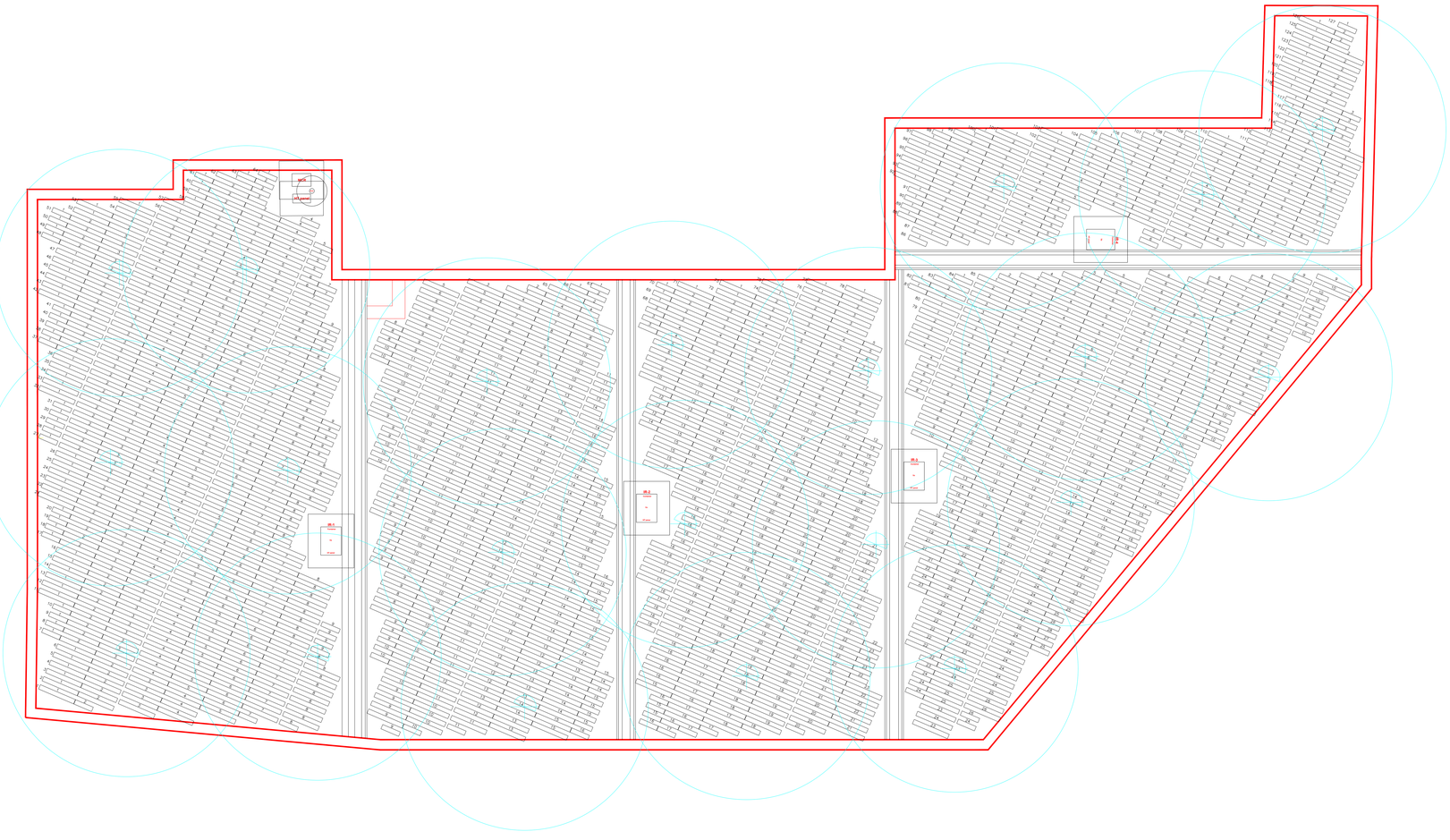

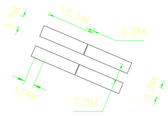

(A).30 MODULE TABLE

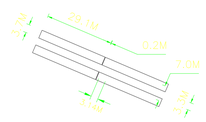

(B).60 MODULE TABLE

LEGEND:–

1. ROADS (i) SINGLE LANE
   (ii) DOUBLE LANE
2. EMBANKMENT
3. BOUNDARY WALL (EXISTING)
4. FENCING
5. LAND ACQUISITION LINE
6. FACILITIES FOR STAGE – I
7. SOLAR PLANT AREA
8. WATCH TOWER
9. FORMATION LEVEL (+)23.20M
10. SWITCHYARD AREA FOR SOLAR PLANT
11. MMS TABLES
12. ROAD AND DRAINS IN SOLOR PLANT AREA

PV ARRAY CAPACITY	20 MW(AC)
TOTAL no.of PV Modules	89400 nos.
PV Modules per series string	30 nos.
Total No. of strings	2980 nos.
LA	21 nos
Main Control Room	1 set
No. of equipment platforms	4 nos
Center to center Inter Row Gap	Refer tables A&B
Land Area	104 Acres.

NOTE:

1.ARRAY LAYOUT HAS BEEN MADE IN REFERENCE TO TOPOGRAPHICAL AND CONTOUR SURVEY DRAWING NO. 5734–004(R)–POC–A–001 Rev.no.B
2.MMS TABLES ARE OF 30/60 PV MODULE CONFIGURATION.

COPYRIGHT AND CONFIDENTIAL
The information on this document is the property of Bharat Heavy Electricals Limited.
It must not be used directly or indirectly in any communication to a third party without the prior consent of the Company

REV.	DATE	ALTERED / CHECKED / APPROVED
00	04.08.20	

	NAME	SIGN	DATE
DRAWN			04.08.20
CHECKED			04.08.20
APPROVED			04.08.20

DISTRIBUTION OF PRINTS

DEPT.	CODE
SCS&PV	439

PROJECT : JHANOR GANDHAR SOLAR POWER PROJECT

CUSTOMER : NTPC

BHARAT HEAVY ELECTRICALS LIMITED.
ELECTRONICS DIVISION, BANGALORE

TITLE: SOLAR PV ARRAY LAYOUT

No. OF SHEETS	02
SHEET No.	01
REV.	00

BHEL DRG. No. 5734–004–PVE–F–001

AO SIZE

This document is the property of N T P C LTD.
No part of this document will be reproduced by any means without the written permission.

REV. NO.

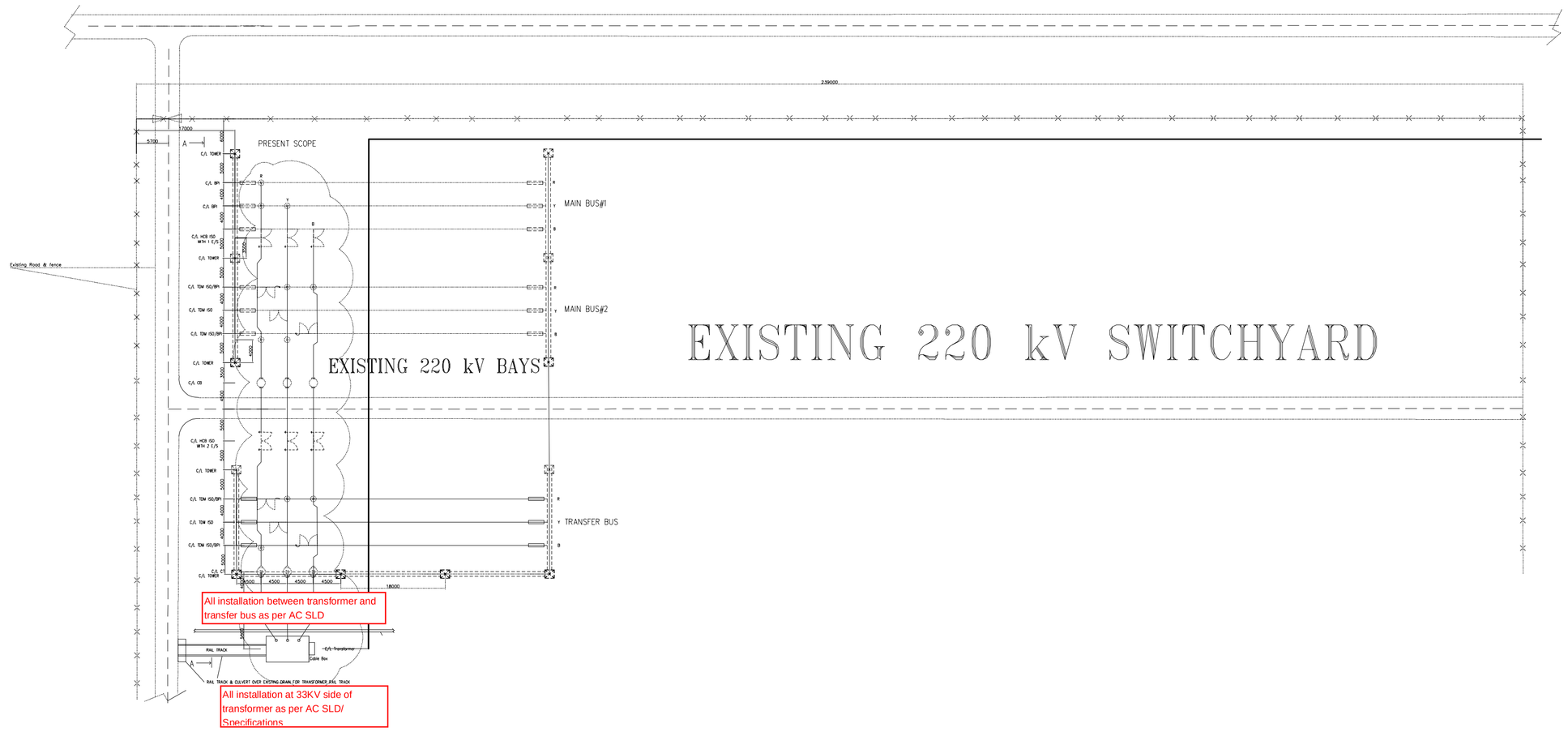

LAYOUT PLAN

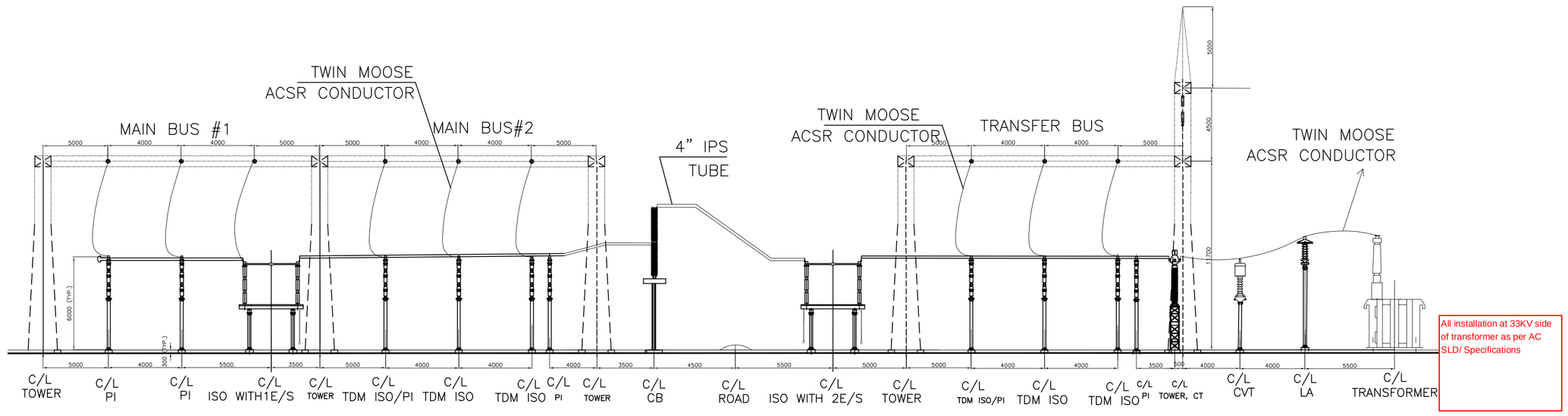

SECTION A-A

MAIN EQUIPMENT BOQ :

220kV (PRESENT SCOPE)			
SYMBOL	ITEM DESCRIPTION	RATING	QUANTITY (NOS.)
	CIRCUIT BREAKER (3ø)	220kV, 40kA, 2000A min.	01
	TANDEM ISOLATOR WITHOUT E/S (3ø)	220kV, 40kA, 2000A min.	02
	HCB ISOLATOR WITH ONE E/S (3ø)	220kV, 40kA, 2000A min.	01
	HCB ISOLATOR WITH TWO E/S (3ø)	220kV, 40kA, 2000A min.	01
	CURRENT TRANSFORMER (1ø)	220kV, 2000A (120% RATED PRIMARY CURRENT)	03
	CAPACITIVE VOLTAGE TRANSFORMER (1ø)	220kV, 8800 pf	03
	LIGHTNING ARRESTOR (1ø)	216kV, 10kA GAPLESS TYPE	03
	POST INSULATOR	220kV	10
All other items as per AC SLD and Detailed specifications			

NOTES:

THE FOLLOWING MINIMUM CLEARANCES SHALL BE ADOPTED

	220 kV
PHASE TO PHASE	2100 mm
PHASE TO EARTH	2100 mm
SECTION CLEARANCE	5000 mm
Vertical clearance bet. lowest part of the insulator & plinth level	2550 mm

LAYOUT SHOWN IS INDICATIVE ONLY, DETAILED LAYOUT SHALL BE FINALISED DURING DETAILED ENGINEERING.

. CONNECTION TYPES

	LEVEL FROM PLINTH	220 kV
(a) MAIN BUS 1 & 2	11700 mm	QUAD MOOSE ACSR
(b) TRANSFER BUS	11700 mm	TWIN MOOSE ACSR
(c) JACK BUS	16200 mm	TWIN MOOSE ACSR
(d) EQPT INTERCONNECTION	6000 mm	4" IPS AL. TUBE/TWIN MOOSE ACSR

SUB-CONDUCTOR SPACING FOR QUAD/TWIN MOOSE ACSR MOOSE CONDUCTOR SHALL BE 450 MM.

THE TRANSVERSE, VERTICAL AND LONGITUDINAL LOADS SHALL BE CONSIDERED AS PER IS 802:1977

. ALL HEIGHT ARE WITH REFERENCE TO PLINTH LEVEL OF 300 MM ABOVE GROUND LEVEL.

DISMANTLING AND RE-ROUTING OF EXISTING FIRE-WATER PIPE LINE AS INDICATED IS IN THE SCOPE OF THE BIDDER.

LEGEND:

——— PRESENT SCOPE

- - - - - EXISTING/NOT IN SCOPE

NORMAL CONDUCTOR TENSION:

QUAD ACSR MOOSE : 1.5T/CONDUCTOR

SINGLE/TWIN ACSR MOOSE: 2.0T/CONDUCTOR

SHIELD WIRE : 0.8T

FOR TENDER PURPOSE ONLY

REV.NO	DESCRIPTION	DRAWN	DESIGN	CHKD.	ELEC.	CLEARED BY	APPD.	DATE
A	TENDER DRAWING							

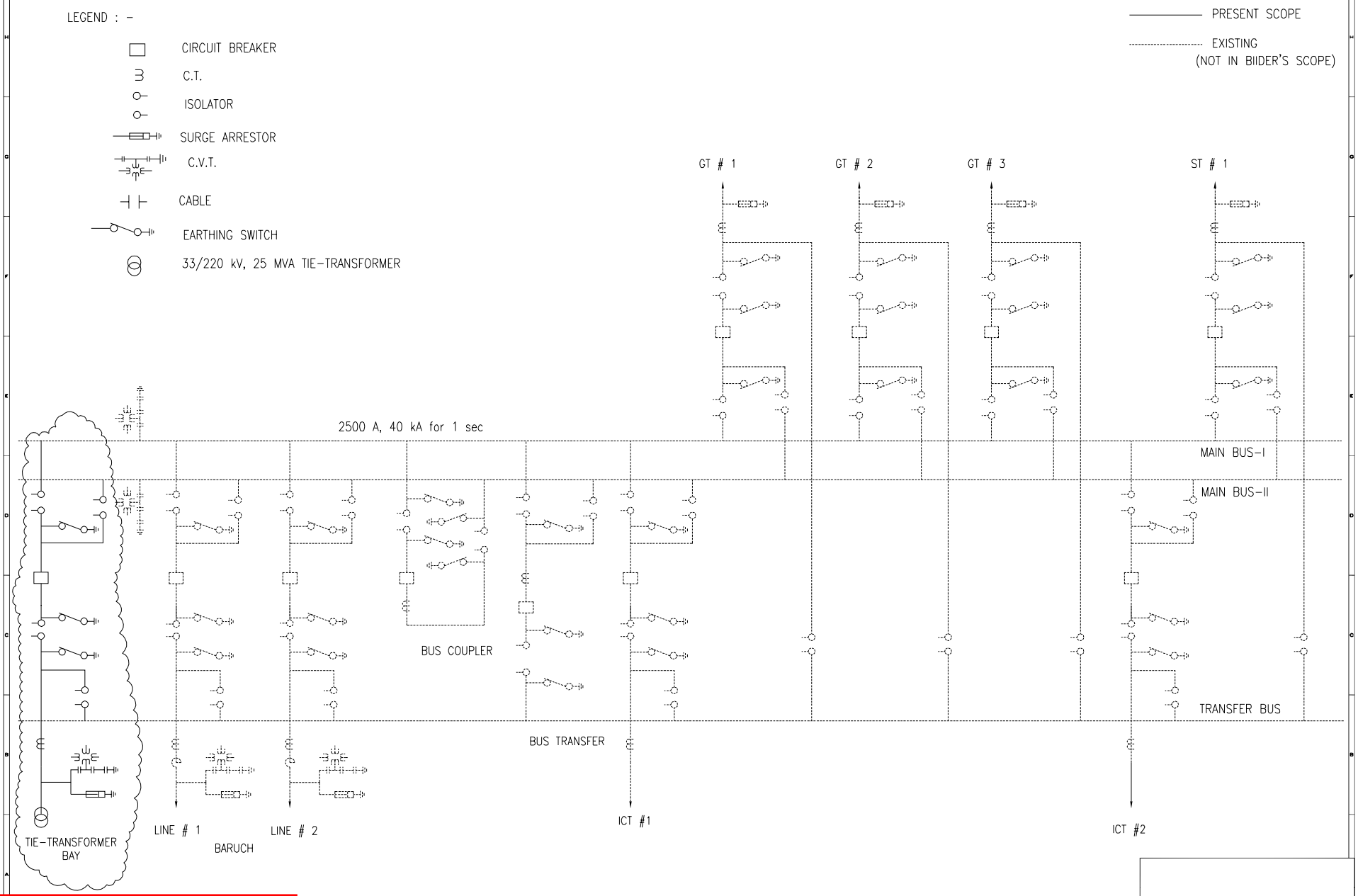

All other items and installation as per AC SLD and Switchyard detailed specifications

REV.	DESCRIPTION	RIVM DRAWN	DESIGN	CHKD.	C	M	E	C&I	CHD APPD	DATE
					CLEARED BY					

This document is the property of NHPC LIMITED, No part of this document shall be reproduced by any means without the written permission.

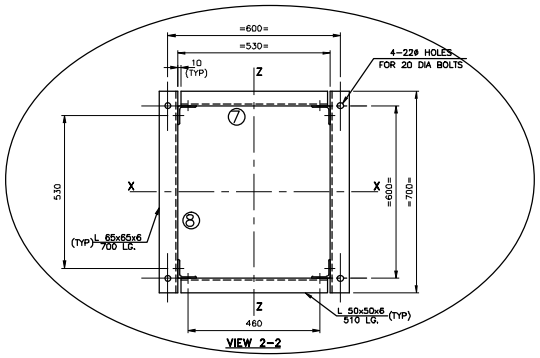

VIEW 2-2

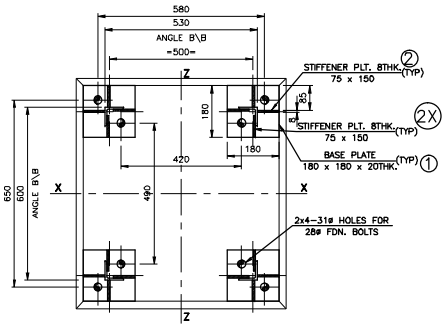

DETAIL OF BASE PLATE FOR CT(1600A)

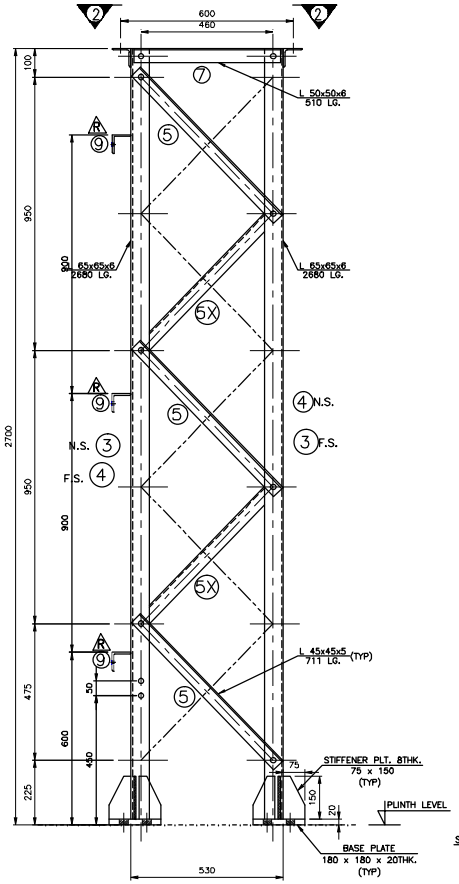

ELEVATION OF CT STRUCTURE
(ALONG X-X)

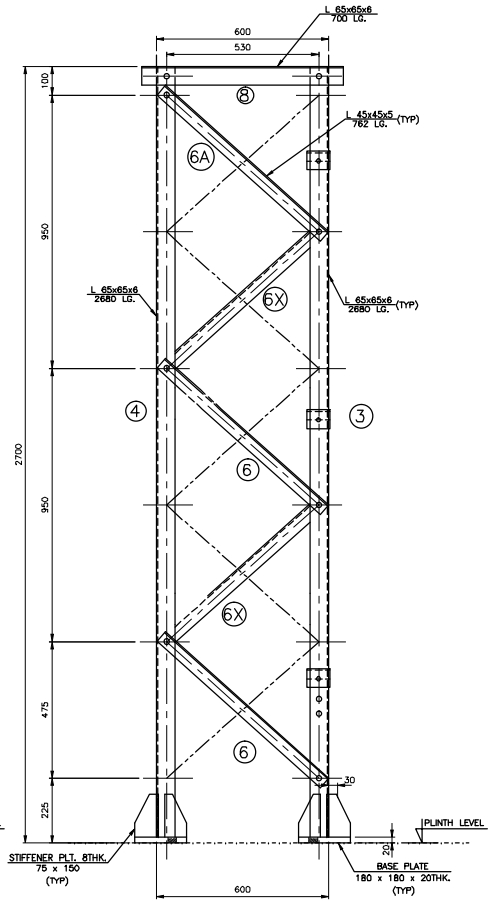

SIDE VIEW OF C1 STRUCTURE
(ALONG Z-Z)

SPECIFIC NOTES

1. ALL DIMENSIONS ARE IN mm.
2. ALL STEEL AS PER IS:2062 (E350, E250) & FABRECATION SHALL BE AS PER IS:802.
3. BOLTS & NUTS SHALL BE PROPERTY CLASS 5.6 & 5.0 RESPECTIVELY AS PER IS:12427, PACK WASHER TO IS:2016 & SPR. WASHER TO IS:3063
4. GALVANISING SHALL BE 0.610 KG/SQM. AS PER IS 2629/4759
5. ALL HOLES 17.5 mm DIA FOR M16 mm DIA BOLT IF NOT STATED OTHERWISE.
6. UNNOTED BRACING ARE L 45X45X4 WITH 23 mm BACK MARK.
7. WELDING SHALL BE DONE AS PER IS:816 (LATEST REVISION) FOR ELECTRIC WELDING.
8. ALL WELDS ARE 6mm FILLET CONTINOUS WELD UNLESS OTHERWISE SPECIFIED.
9. FOUNDATION BOLTS SHALL CONFORM TO IS:5624 & PROPERTY CLASS SHALL BE 4.6 AS PER IS:1367(PART 3)
10. FOUNDATION BOLTS SHALL BE HOT DIP GALVANIZED WITH MINIMUM WEIGHT OF ZING COATING AS 0.8 KG/SQM.
11. THIS DRAWING SHALL BE READ IN CONJUNCTION WITH TECHNICAL SPECIFICATION.
12. DIMENSIONS A1 AND A2 SHALL BE MARKED IN THE PROTO-CORRECTED DRAWING.

NTPC LIMITED (A Govt. of India Enterprise)
PROJECT : DEVELOPMENT OF 65 MW KAWAS & 21 MW GANDHAR SPV PROJECT IN GUJARAT
TITLE : STRUCTURE DRAWING OF 220 kV CT
DRG.NO. : 5732/5734-004-POE-A-005 REV NO. 00

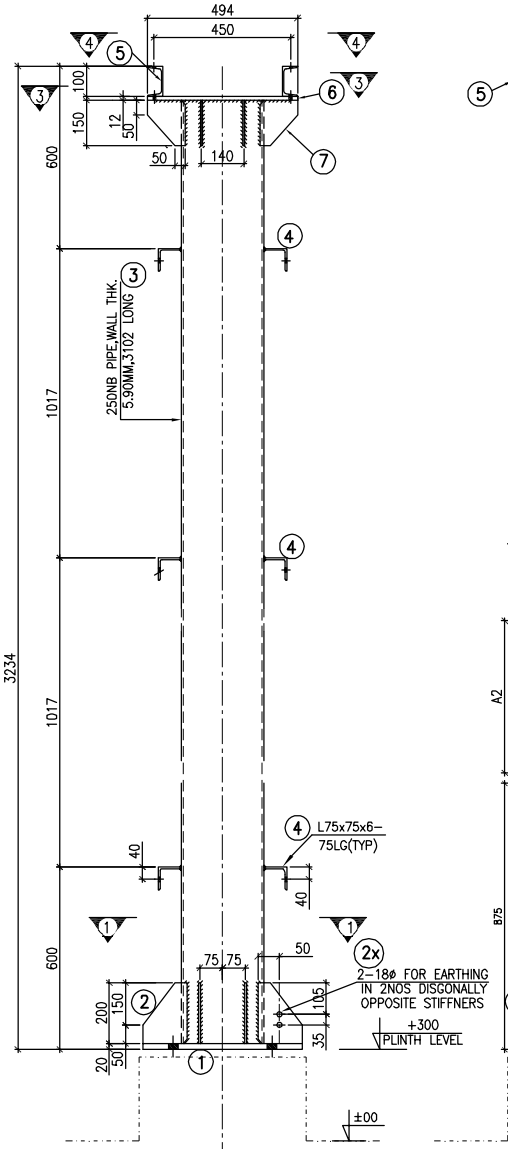

ELEVATION

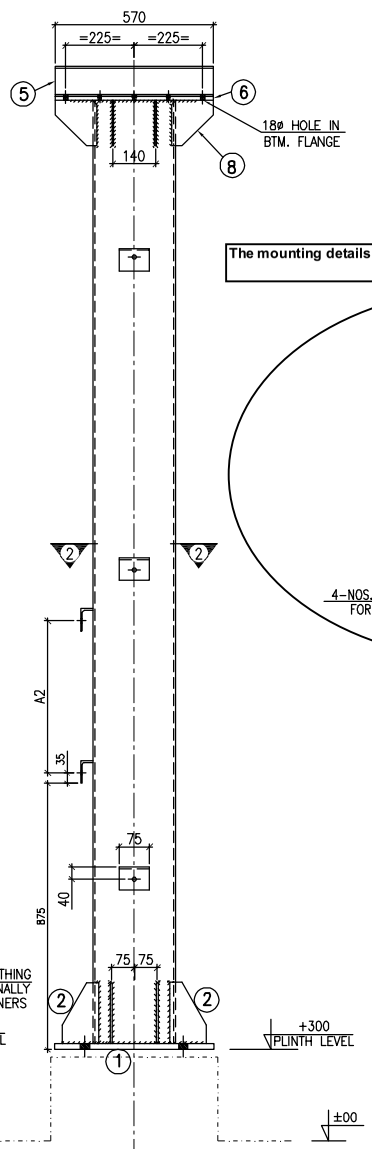

SIDE VIEW

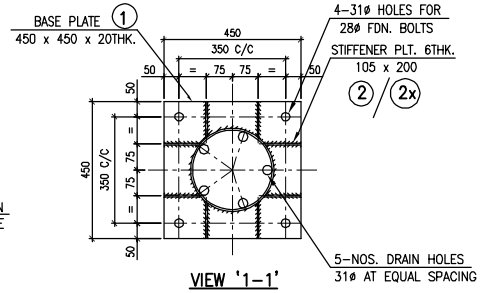

VIEW '1-1'

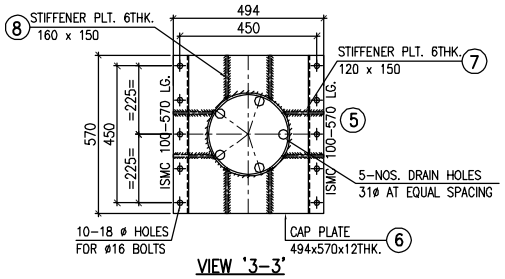

VIEW '3-3'

The mounting details i.e. spacing between the holes & hole dia. shall be as per OGA drg. of the equipment

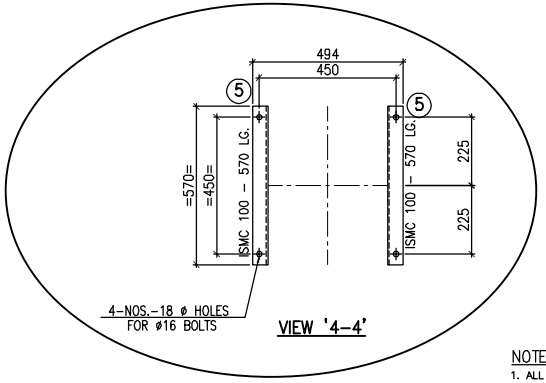

VIEW '4-4'

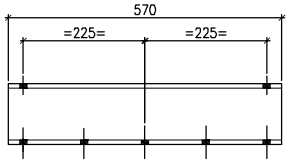

ENLARGED DETAIL OF ITEM NO. 5

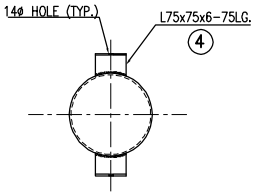

VIEW '2-2'

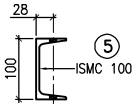

SEC. VIEW-MK.-5

NOTES

1. ALL DIMENSIONS ARE IN mm.
2. ALL STEEL AS PER IS:2062 GRADE-A (E350, E250) & FABRECATION SHALL BE AS PER IS:802.
3. BOLTS & NUTS SHALL BE PROPERTY CLASS 5.6 & 5.0 RESPECTIVELY AS PER IS:12427, PACK WASHER TO IS:2016 & SPR. WASHER TO IS:3063
4. GALVANISING SHALL BE 0.610 KG/SQM. AS PER IS 2629/4759
5. ALL HOLES 17.5 mm DIA FOR M16 mm DIA BOLT IF NOT STATED OTHERWISE.
6. UNNOTED BRACING ARE L 45X45X4 WITH 23 mm BACK MARK.
7. WELDING SHALL BE DONE AS PER IS:816 (LATEST REVISION) FOR ELECTRIC WELDING.
8. ALL WELDS ARE 6mm FILLET CONTINOUS WELD UNLESS OTHERWISE SPECIFIED.
9. FOUNDATION BOLTS SHALL CONFORM TO IS:5624 & PROPERTY CLASS SHALL BE 4.6 AS PER IS:1367(PART 3)
10. FOUNDATION BOLTS SHALL BE HOT DIP GALVANIZED WITH MINIMUM WEIGHT OF ZING COATING AS 0.8 KG/SQM.
11. THIS DRAWING SHALL BE READ IN CONJUNCTION WITH TECHNICAL SPECIFICATION.
12. DIMENSIONS A1 AND A2 SHALL BE MARKED IN THE PROTO-CORRECTED DRAWING.

NTPC LIMITED (A Govt. of India Enterprise)
PROJECT : DEVELOPMENT OF 65 MW KAWAS & 21MW GANDHAR SPV PROJECT IN GUJARAT
TITLE : STRUCTURE DRAWING OF 220 kV CVT
DRG.NO. : 5732/5734-004-POE-A-006 REV NO. 00

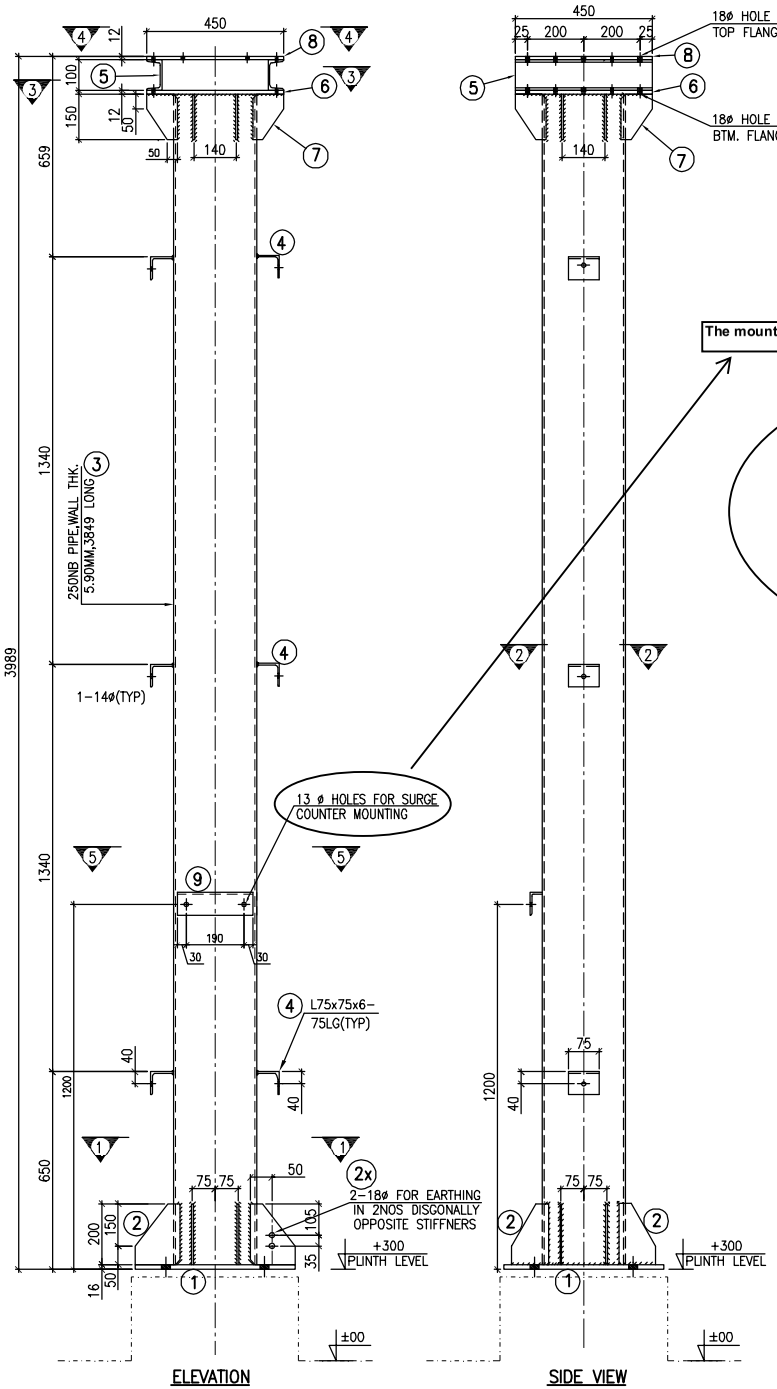

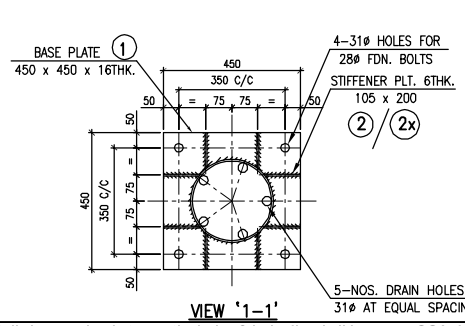

VIEW '1-1'

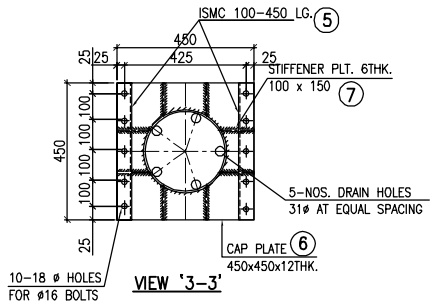

VIEW '3-3'

The mounting details i.e. spacing between the holes & hole dia. shall be as per OGA drg. of the equipment

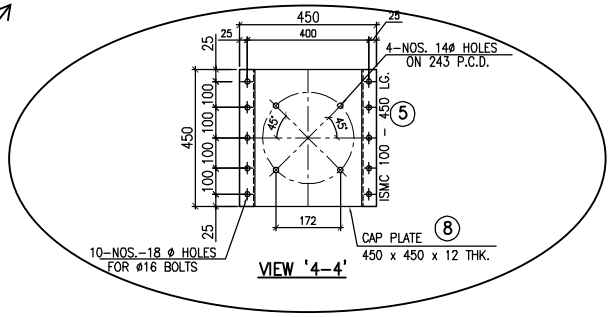

VIEW '4-4'

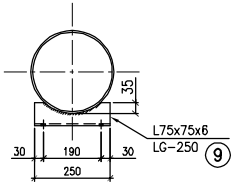

VIEW '5-5'
(SURGE COUNTER MOUNTING DETAILS)

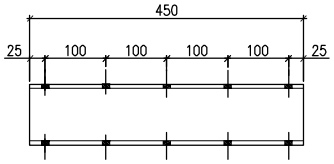

ENLARGED DETAIL OF ITEM NO. 5

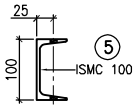

SEC. VIEW-MK.-5

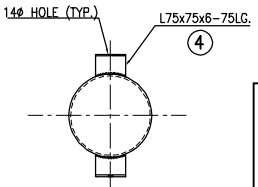

VIEW '2-2'

NOTES

1. ALL DIMENSIONS ARE IN mm.
2. ALL STEEL AS PER IS:2062 GRADE-A (E350, E250) & FABRECATION SHALL BE AS PER IS:802.
3. BOLTS & NUTS SHALL BE PROPERTY CLASS 5.6 & 5.0 RESPECTIVELY AS PER IS:12427, PACK WASHER TO IS:2016 & SPR. WASHER TO IS:3063
4. GALVANISING SHALL BE 0.610 KG/SQM. AS PER IS 2629/4759
5. ALL HOLES 17.5 mm DIA FOR M16 mm DIA BOLT IF NOT STATED OTHERWISE.
6. UNNOTED BRACING ARE L 45X45X4 WITH 23 mm BACK MARK.
7. WELDING SHALL BE DONE AS PER IS:816 (LATEST REVISION) FOR ELECTRIC WELDING.
8. ALL WELDS ARE 6mm FILLET CONTINOUS WELD UNLESS OTHERWISE SPECIFIED.
9. FOUNDATION BOLTS SHALL CONFORM TO IS:5624 & PROPERTY CLASS SHALL BE 4.6 AS PER IS:1367(PART 3)
10. FOUNDATION BOLTS SHALL BE HOT DIP GALVANIZED WITH MINIMUM WEIGHT OF ZING COATING AS 0.8 KG/SQM.
11. THIS DRAWING SHALL BE READ IN CONJUNCTION WITH TECHNICAL SPECIFICATION.

NTPC LIMITED (A Govt. of India Enterprise)
PROJECT: DEVELOPMENT OF 65 MW KAWAS &21MW GANDHAR SPV PROJECT IN GUJARAT
TITLE : STRUCTURE DRAWING OF 220 kV LA
DRG.NO. : 5732/5734-004-POE-A-007 REV NO. 00

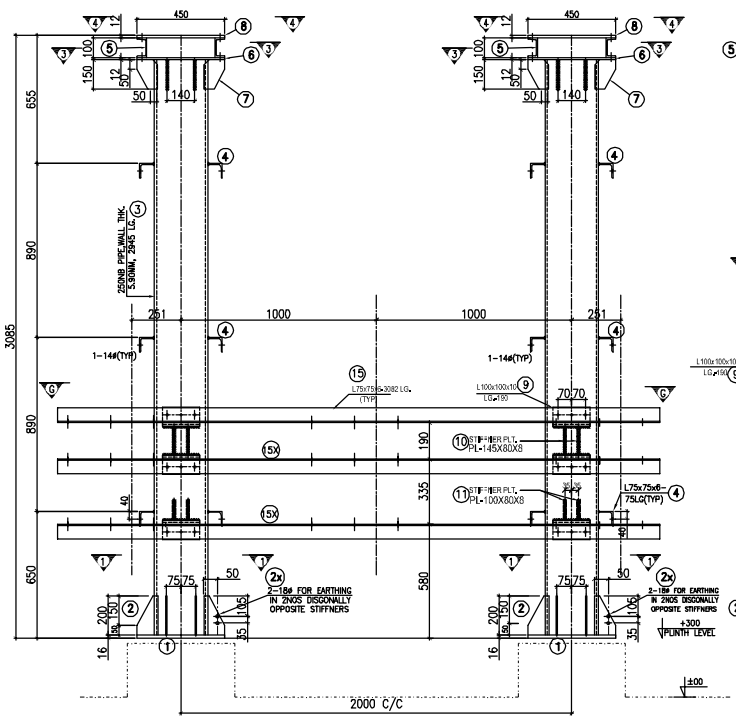

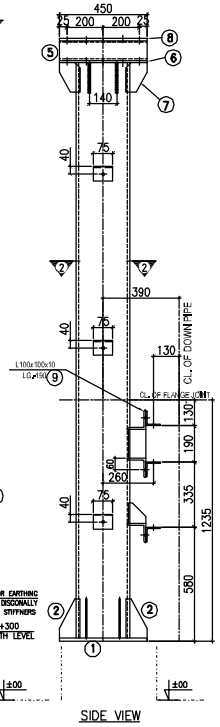

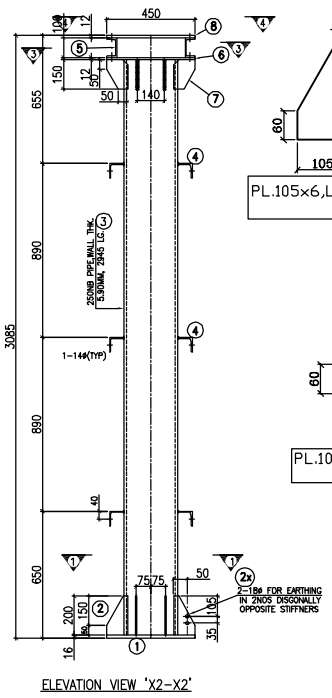

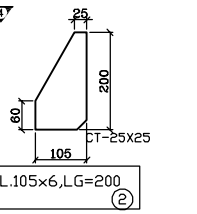

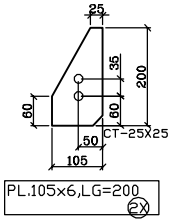

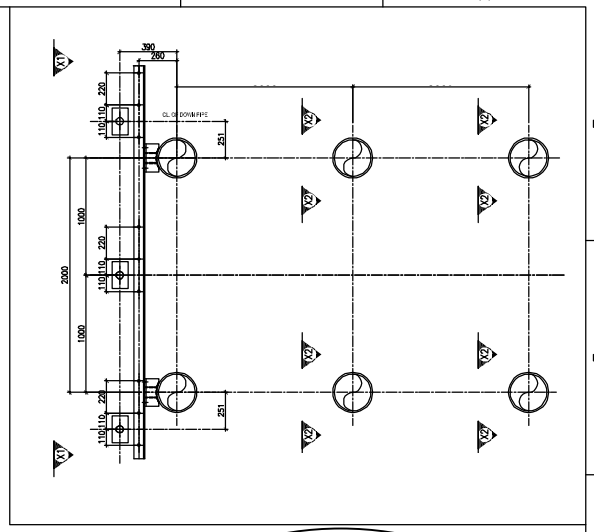

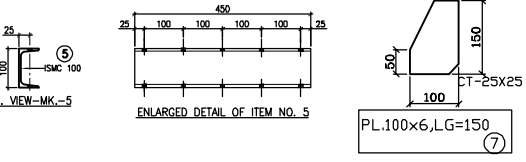

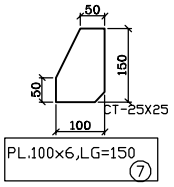

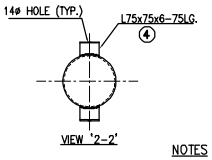

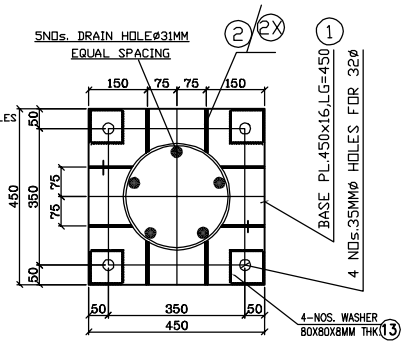

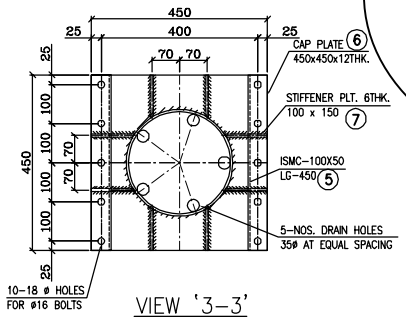

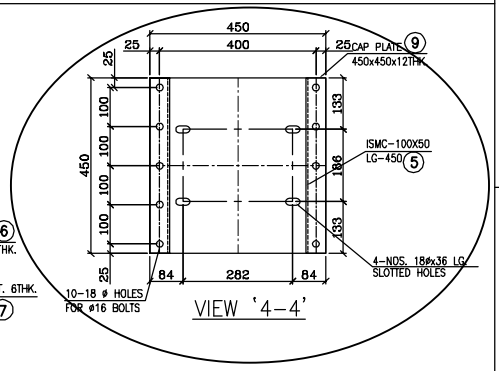

The mounting details i.e. spacing between the holes & hole dia. shall be as per OGA drg. of the equipment

12. The mounting details of Isolator Operating mechanism boxes are indicative only, the same shall be as per OGA drg. of the equipment.

BOLTS & NUTS STATEMENTS

TYPE	SIZE IN MM	2ISM2E
E	ø16MM X50MM	-
F	ø16MM X45MM	158
	ø12MM X40MM	36
Spring Washer 3.5THK.		158
Spring Washer 2.5THK.		36

NOTES

1. ALL DIMENSIONS ARE IN mm.
2. ALL STEEL AS PER IS:2062 GRADE-A (E350, E250) & FABRICATION SHALL BE AS PER IS:802.
3. BOLTS & NUTS SHALL BE PROPERTY CLASS 5.6 & 5.0 RESPECTIVELY AS PER IS:12427, PACK WASHER TO IS:2016 & SPR. WASHER TO IS:3063
4. GALVANISING SHALL BE 0.610 KG/SQM. AS PER IS 2629/4759
5. ALL HOLES 17.5 mm DIA FOR M16 mm DIA BOLT IF NOT STATED OTHERWISE.
6. UNNOTED BRACING ARE L 45X45X4 WITH 23 mm BACK MARK
7. WELDING SHALL BE DONE AS PER IS:816 (LATEST REVISION) FOR ELECTRIC WELDING
8. ALL WELDS ARE 6mm FILLET CONTINOUS WELD UNLESS OTHERWISE SPECIFIED.
9. FOUNDATION BOLTS SHALL CONFORM TO IS:5624 & PROPERTY CLASS SHALL BE 4.6 AS PER IS:1367(PART 3)
10. FOUNDATION BOLTS SHALL BE HOT DIP GALVANIZED WITH MINIMUM WEIGHT OF ZING COATING AS 0.8 KG/SQM.
11. THIS DRAWING SHALL BE READ IN CONJUNCTION WITH TECHNICAL SPECIFICATION.

NTPC LIMITED (A Govt. of India Enterprise)
PROJECT :DEVELOPMENT OF 65 MW KAWAS & 21MW GANDHAR SPV PROJECT IN GUJARAT
TITLE : STRUCTURE DRAWING OF 220 kV ISOLATOR WITH 2E/S, 1E/S
DRG.NO. : 5732/5734-004-POE-A-008, SH. 1 OF 2
REV NO. 00

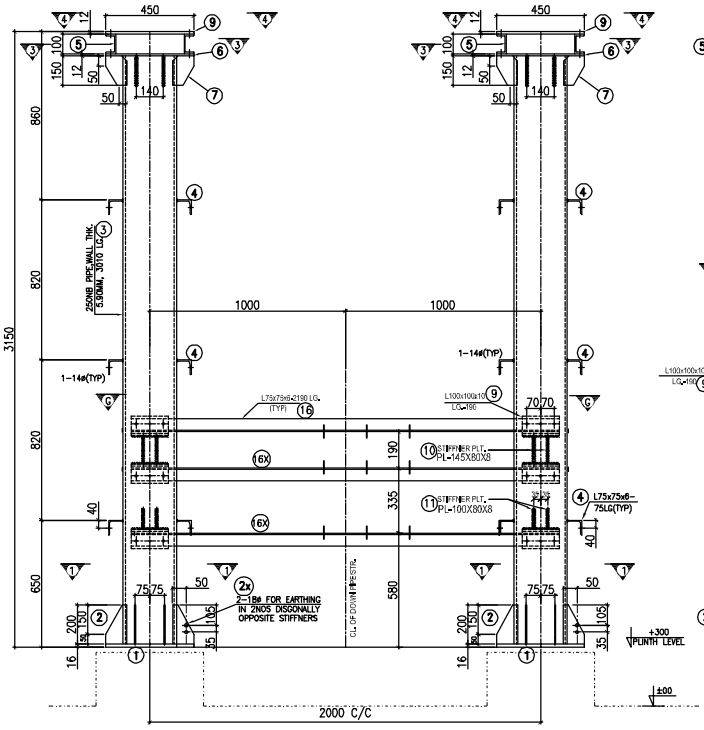

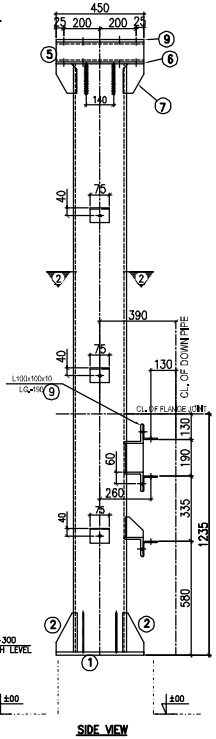

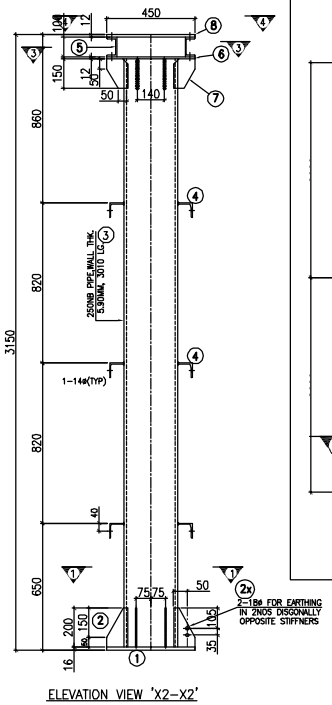

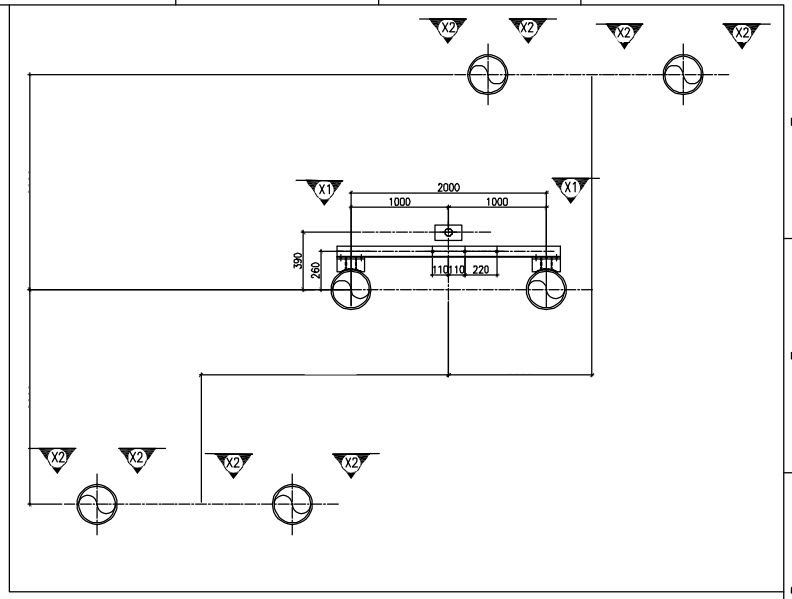

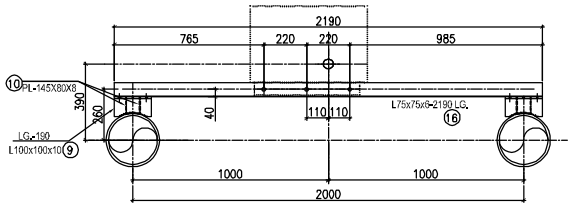

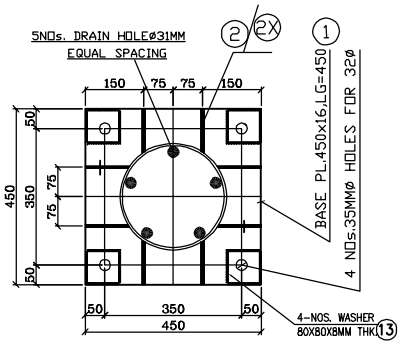

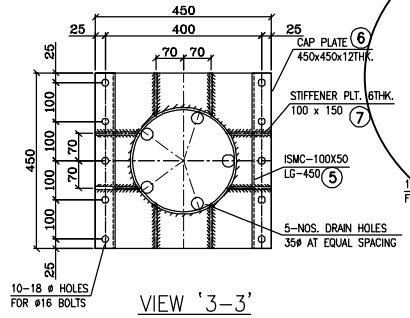

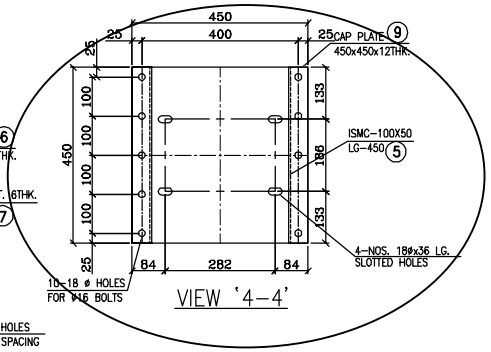

The mounting details i.e. spacing between the holes & hole dia. shall be as per OGA drg. of the equipment

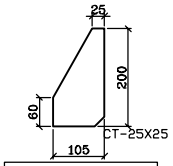

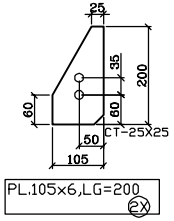

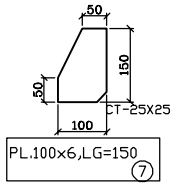

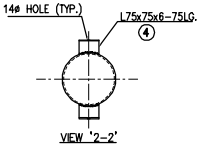

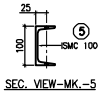

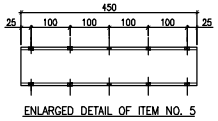

BOLTS & NUTS STATEMENTS

TYPE	SIZE IN MM	2TISM
E	ø16MM X50MM	-
F	ø16MM X45MM	158
	ø12MM X40MM	36
Spring Washer 3.5THK.		158
Spring Washer 2.5THK.		36

NOTES

1 ALL DIMENSIONS ARE IN mm.
2. ALL STEEL AS PER IS:2062 GRADE-A (E350, E250) & FABRICATION SHALL BE AS PER IS:802.
3. BOLTS & NUTS SHALL BE PROPERTY CLASS 5.6 & 5.0 RESPECTIVELY AS PER IS:12427, PACK WASHER TO IS:2016 & SPR. WASHER TO IS:3063
4 GALVANISING SHALL BE 0.610 KG/SQM. AS PER IS 2629/4759
5. ALL HOLES 17.5 mm DIA FOR M16 mm DIA BOLT IF NOT STATED OTHERWISE.
6. UNNOTED BRACING ARE L 45X45X4 WITH 23 mm BACK MARK
7. WELDING SHALL BE DONE AS PER IS:816 (LATEST REVISION) FOR ELECTRIC WELDING
8. ALL WELDS ARE 6mm FILLET CONTINOUS WELD UNLESS OTHERWISE SPECIFIED.
9. FOUNDATION BOLTS SHALL CONFORM TO IS:5624 & PROPERTY CLASS SHALL BE 4.6 AS PER IS:1367(PART 3)
10. FOUNDATION BOLTS SHALL BE HOT DIP GALVANIZED WITH MINIMUM WEIGHT OF ZING COATING AS 0.8 KG/SQM.
11. THIS DRAWING SHALL BE READ IN CONJUNCTION WITH TECHNICAL SPECIFICATION.
12. The mounting details of Isolator Operating mechanism boxes are indicative only, the same shall be as per OGA drg. of the equipment.

NTPC LIMITED (A Govt. of India Enterprise)
PROJECT : DEVELOPMENT OF 65 MW KAWAS & 21MW GANDHAR SPV PROJECT IN GUJARAT
TITLE : STRUCTURE DRAWING OF 220 kV ISOLATOR WITHOUT E/S
DRG.NO. : 5732/5734-004-POE-A-008, SH. 2 OF 2
REV NO. 00

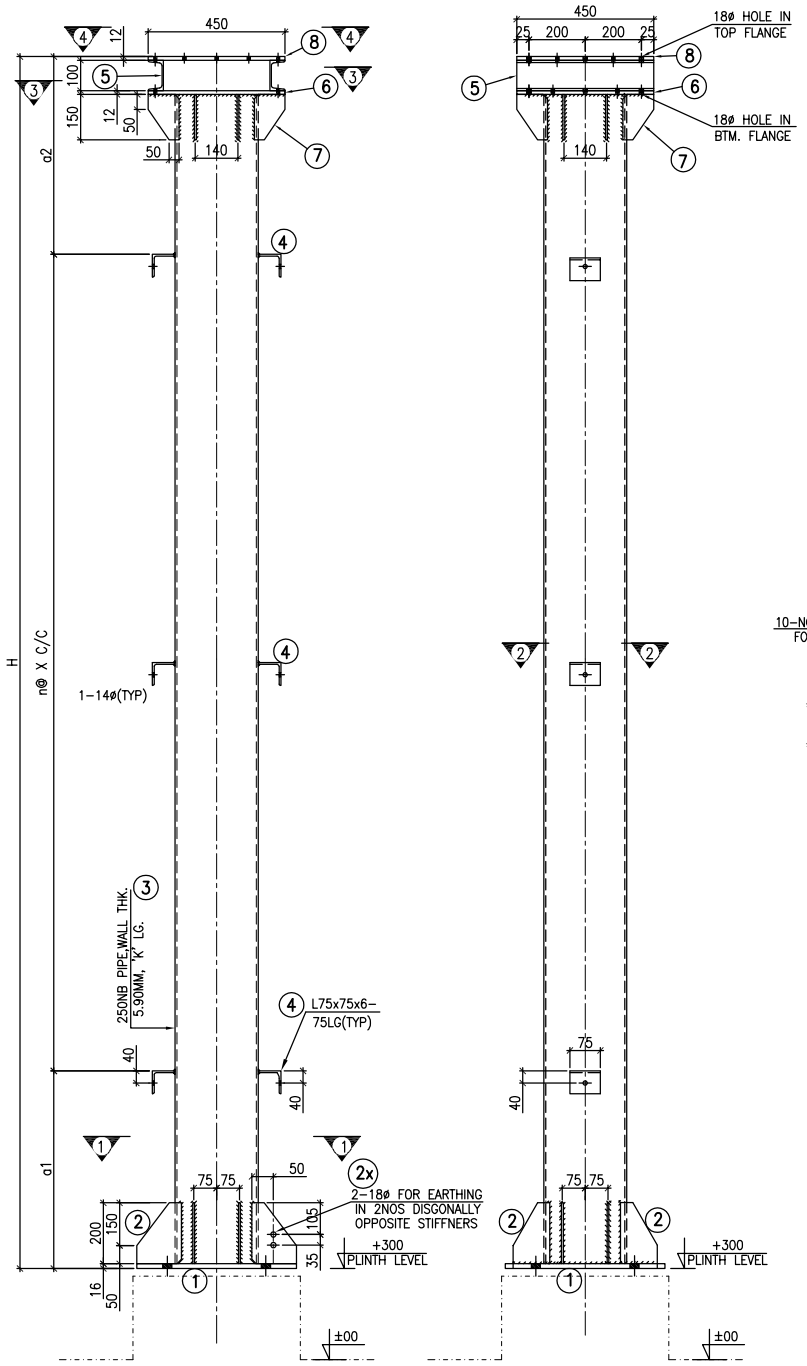

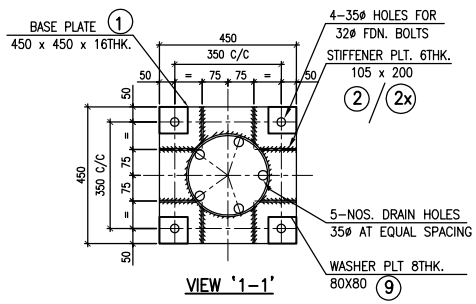

VIEW '1-1'

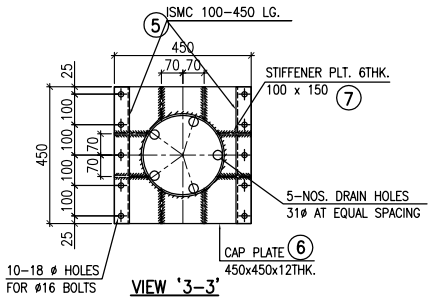

VIEW '3-3'

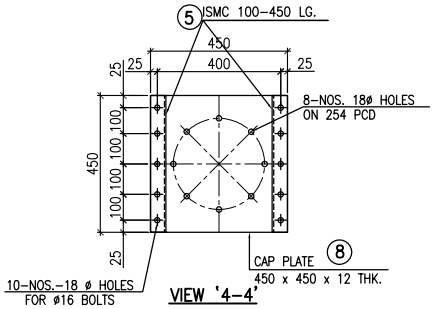

VIEW '4-4'

		2BPI-1 (6 M.)
1	H	3585
2	a1	650
3	a2	655
4	n	2
5	X	1140
6	K	3445

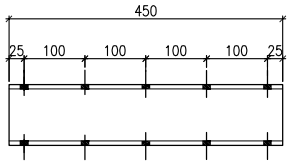

ENLARGED DETAIL OF ITEM NO. 5

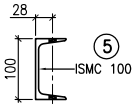

SEC. VIEW-MK.-5

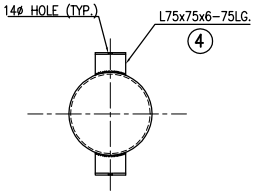

VIEW '2-2'

NOTES

1. ALL DIMENSIONS ARE IN mm.
2. ALL STEEL AS PER IS:2062 (E350, E250) & FABRECATION SHALL BE AS PER IS:802.
3. BOLTS & NUTS SHALL BE PROPERTY CLASS 5.6 & 5.0 RESPECTIVELY AS PER IS:12427, PACK WASHER TO IS:2016 & SPR. WASHER TO IS:3063
4. GALVANISING SHALL BE 0.610 KG/SQM. AS PER IS 2629/4759
5. ALL HOLES 17.5 mm DIA FOR M16 mm DIA BOLT IF NOT STATED OTHERWISE.
6. UNNOTED BRACING ARE L 45X45X4 WITH 23 mm BACK MARK.
7. WELDING SHALL BE DONE AS PER IS:816 (LATEST REVISION) FOR ELECTRIC WELDING.
8. ALL WELDS ARE 6mm FILLET CONTINOUS WELD UNLESS OTHERWISE SPECIFIED.
9. FOUNDATION BOLTS SHALL CONFORM TO IS:5624 & PROPERTY CLASS SHALL BE 4.6 AS PER IS:1367(PART 3)
10. FOUNDATION BOLTS SHALL BE HOT DIP GALVANIZED WITH MINIMUM WEIGHT OF ZING COATING AS 0.8 KG/SQM.
11. THIS DRAWING SHALL BE READ IN CONJUNCTION WITH TECHNICAL SPECIFICATION.

NTPC LIMITED (A Govt. of India Enterprise)
PROJECT : DEVELOPMENT OF 65MW KAWAS & 21MW GANDHAR SPV PROJECT AT GUJARAT
TITLE : STRUCTURE DRAWING OF 220 kV BPI
DRG.NO. : 5732/34-004-POE-A-009 REV NO. 00

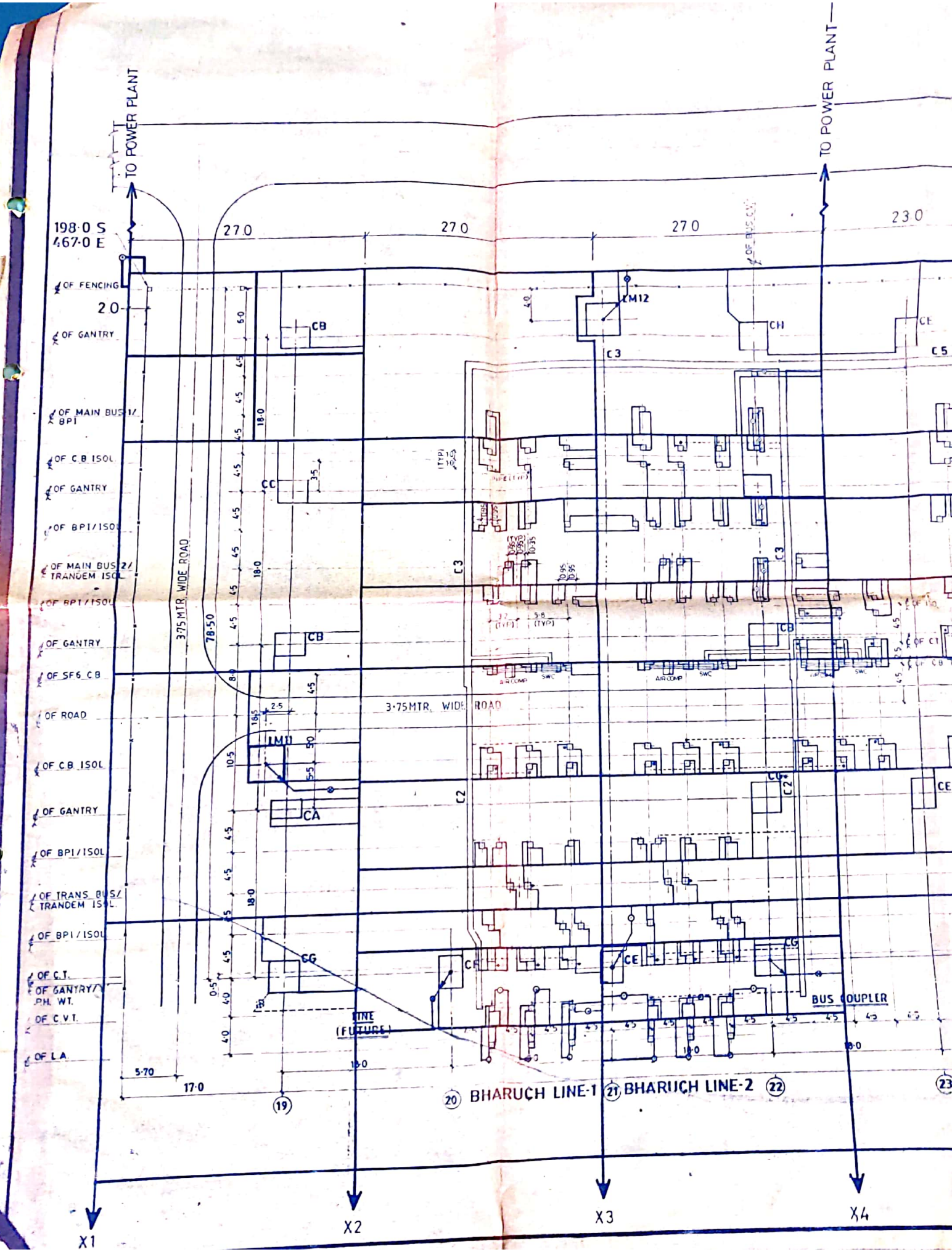

Scanned with CamScanner

REFER DRG. NO. GKWG 520032

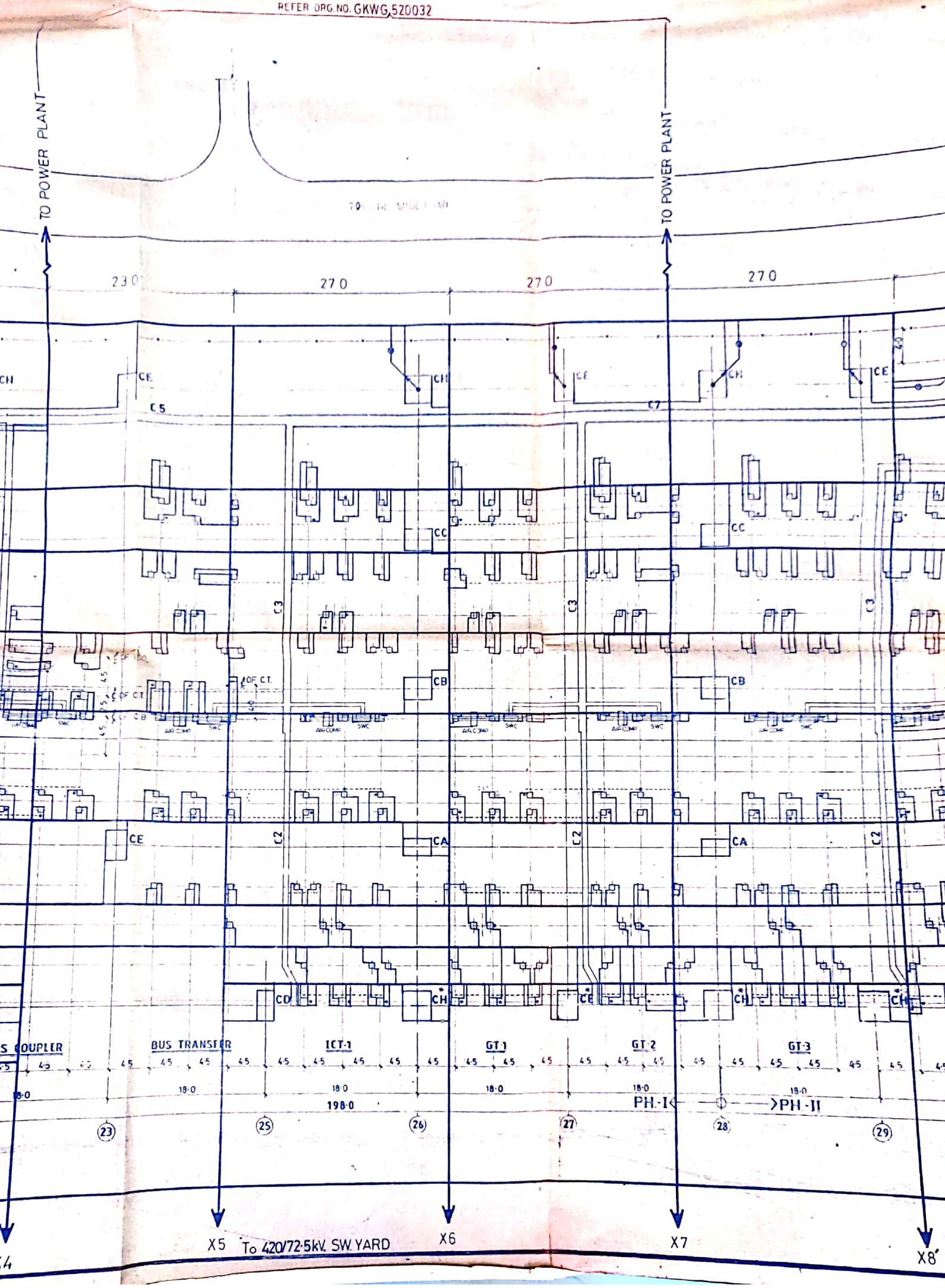

Scanned with CamScanner

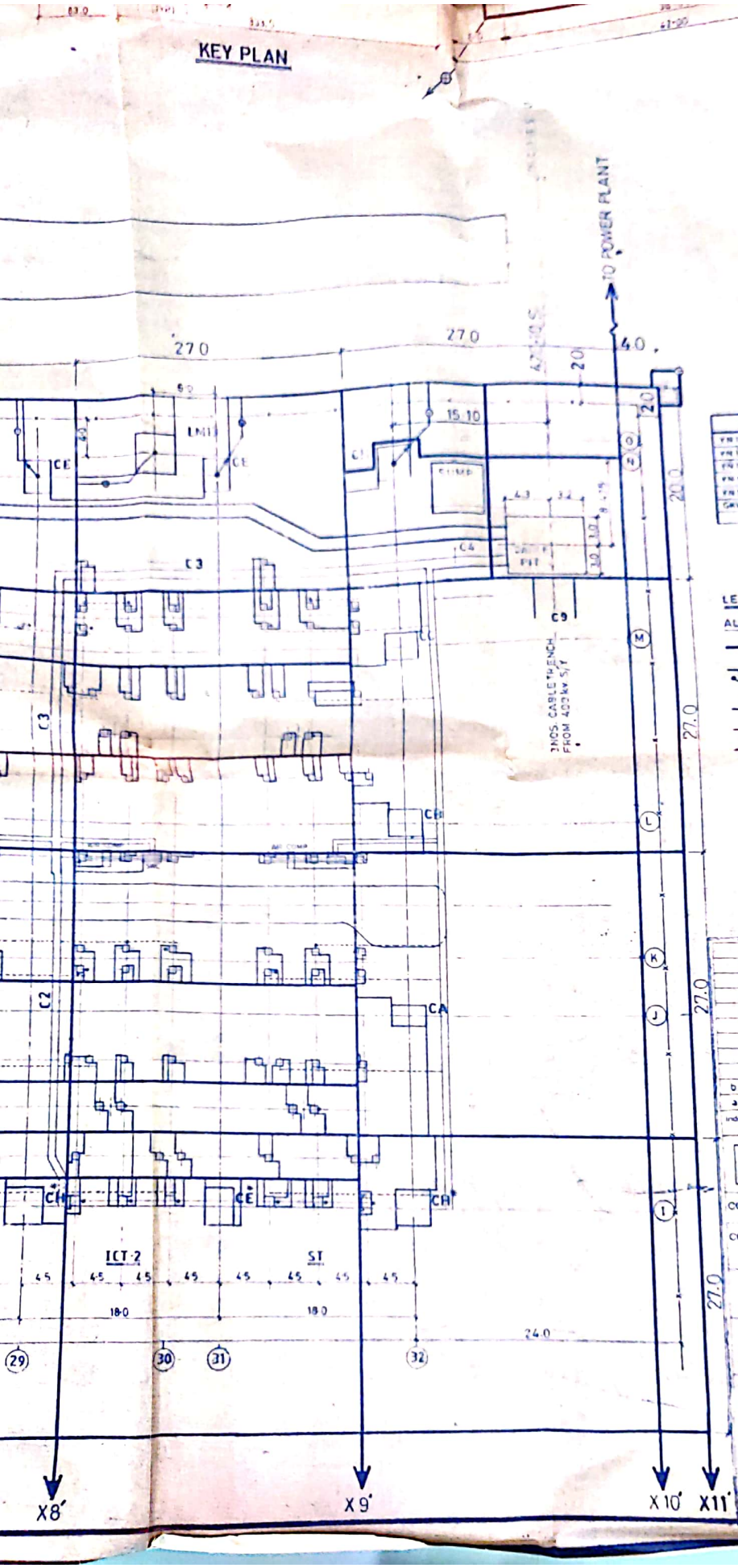

DRAWING REFERENCE	
YN1H 300 003-036	EARTHING NOTES
YN1H 300 003-401	EARTHING ELECTRODE
YN1H 300 003-016	TERTIARY EARTHING LAYOUT
YN1H 300 003-031	420kV SWYARD EARTHING LAYOUT
YN1H 300 003-601	EQUIPMENT EARTHING
GA WG 520017	POWER PLANT EARTHING SYSTEM OUT DOOR AREA

LEGENDS

ALL DIMENSIONS ARE IN METER

- MAIN EARTH GRID - 40 mm ø M.S. ROD
- RISER INTER CONNECTIONS - 40 mm ø M.S. ROD BELOW G.L.
- DOWN WARD EARTH CONDUCTOR
- ROD EARTH ELECTRODE (DRIVEN TYPE)
- ROD EARTH ELECTRODE
- PIPE ELECTRODE (TREATED PIT)
- AUX. EARTHMAT (1.5x1.5 M.) OF 40 mm M.S. BELOW ISO. DRIVE
- ASTERISK MARKED TOWERS ARE WITHOUT PEAK

Index	Date	Remarks	Approved	Date	Issued
b	17-12-92	MODIFIED AS PER NTPC COMMENTS		17-8-92	
a	26-7-92	NTPC COMMENTS INCORPORATED		2-7-92	

NTPC National Thermal Power Corporation Ltd.
(A Government of India Enterprise)

CONTRACT NO: CC 9524.001

N.T.P.C DRAWING NO.

NTPC CONSULTANT COMMENTS LTR NO / DATE

JHANOR-GANDHAR - Gas Power Project
(Stage-1)

ABB ASEA BROWN BOVERI

CONTRACT PACKAGE NO. 01/C.C - 9524-001 / LOA-4 / 2473

DOC NO. Y N 1 A G 1

245kV SWITCHYARD EARTHING LAYOUT

UNIT NO.
SCALE 1:250
DRAWN 27.6.92
CHECKED
APVD
AUTHOD

ABB ASEA BROWN BOVERI

YN1H 300003-029

Scanned with CamScanner

Appendix-2

एनटीपीसी NTPC	**PROJECT** : **21 MW GANDHAR SOLAR PHOTO VOLTAIC PROJECT IN GUJARAT** **PACKAGE :** DEVELOPMENT OF 21 MW GANDHAR SOLAR PHOTO VOLTAIC PROJECT IN GUJARAT **CONT. NO. :**	**INDICATIVE VENDOR LIST**	**DOC NO. : BID DOC. NO: RECS-5734-004(R)-9** **REVISION NO.** 00 **DATE :** 09.08.2017 **PAGE :** 1

Sl. No.	ITEM	QP / INS CAT.	QP No. -	ACCEPTABLE SUPPLIER AS PER DATABASE	PLACE	SC APPL STATUS	REMARKS
1.	SPV module	I	Q-001	BHEL	Bangalore	A@	@- vendor acceptance subject to Sub-QR clearance
				Warree	Surat	A@	
				Emmvee	Bangalore	A@	
				Vikram Solar	Parganas	A@	
				Lanco Solar	Chattisgarh	A@	
				Tata Power Solar	Bangalore	A@	
				Alpex	Solan	A@	
				Synergy	Durgapur	A@	
				Photonix	Satara	A@	
				HHV Solar	Bangalore	A@	
2.	Power Conditioning Unit (PCU)	I	Q-002	Schneider	Bangalore	A	Conditions apply
				ABB	Bangalore	A	Conditions apply
				Bongfiglioli	Germany	A	Conditions apply
				Fecon	Germany	A	Conditions apply
				AEG	Bangalore	A	Conditions apply
				Hitachi-Hirel	Gandhinagar	A	Conditions apply
				Hitachi-Hirel	Sananad	A	Conditions apply
				Vacon	Bangalore	A	Conditions apply
3.	String Monitoring Box (SMB)	II	Q-003	Trinity Touch	Palwal	A	Conditions apply

Indicative

Sl. No.	ITEM	QP / INS CAT.	QP No. -	ACCEPTABLE SUPPLIER AS PER DATABASE	PLACE	SC APPL STATUS	REMARKS
				Hensel	Sriperumbudur	A	Conditions apply
				AEG	Bangalore	A	Conditions apply
				Statcon	Pilkhuwa	A	Conditions apply
				Weidmuller	Spain	A	Conditions apply
4.	Weather station panel (comprising of Pyranometer, anemometer & thermometer etc.)	III		Any make-model with VDE/ CE/UL/ CSA marking or BIS approved with CML no. (Refer Note-6)			
5.	DC Cable Connector	III		Any make-model which is Type Tested as per EN 50521 or having marking of VDE/ CE/UL/ CSA/ "BIS with CML no." (Refer Note-1)			
6.	Floor mounted Draw out type indoor LT Switchgear Panel (MCC etc.) Refer Note-5	I	Q-004	L&T	Mumbai / Coimbatore/Ahmednagar	A	BOIs preferably with VDE/CE/UL/CSA marked or BIS approved with valid CML no.
				GE	Bangalore	A	
				C&S Electric	Noida / Hardwar	A	
				Schneider	Nasik	A	ACB from Schneider, France
				Unilec	Gurgaon	A	
				Siemens	Kalwa	A	Conditions apply

Indicative

Sl. No.	ITEM	QP / INS CAT.	QP No. -	ACCEPTABLE SUPPLIER AS PER DATABASE	PLACE	SC APPL STATUS	REMARKS
				Tricolite	Manesar	A	Conditions apply
7.	LV Air Circuit Breaker	*		C&S Electric	Noida	A	*(part of Swgr MQP)
				L&T	Mumbai	A	
				GE	Bangalore	A	
				Siemens	Germany	A	
				Schneider	France	A	
8.	Floor mounted Fixed type indoor LT Switchgear Panel (ACDB / DCDB / MLDB etc.) Refer Note-5	I	Q-005	Switching Circuits	Kolkata	A	BOIs preferably with CE/VDE/UL/CSA marked or BIS approved with valid CML no.
				Tricolite	Sahibabad / Manesar	A	
				Hindustan Control & equipment Ltd	kolkata	A	With fabrication & painting at unit II & MP Electrical Narendrapur
				Maktel	Vadodara	A	Prior Type Testing
				Jakson	Greater Noida	A	
				Vidyut Control	Gaziabad	A	
				Adlec Power	Rohad (Jhajjar)	A	
				Pyrotech	Udaipur	A	

Indicative

Sl. No.	ITEM	QP / INS CAT.	QP No. -	ACCEPTABLE SUPPLIER AS PER DATABASE	PLACE	SC APPL STATUS	REMARKS
				Conquerent Control System	Manesar	A	Condition apply ,upto 1250A
				Control & Schematics	Hyderabad	A	
				Positronics	Vadodara	A	
				Anand Power Ltd.	Noida	A	
				Nitya Electrocontrols	Noida	A	
				Additionally all vendors identified for Floor mounted Draw out type indoor LT Switchgear Panel			
9.	Wall mounted fixed type indoor / outdoor LT Switchgear non compartmentalized Panel (Lighting panels / AC / DC Fuse boards etc.) Refer Note-5	I	Q-006	Control Devices	Kolkata	A	BOIs preferably with CE/VDE/UL/CSA marked or BIS approved with valid CML no.
				Conquerent Control Systems	Manesar	A	
				Jasper	Noida	A	
				Havells	Faridabad	A	
				Novateur Electrical & distribution systems	Murthal	A	
				Avaid Technovator	Manesar	A	

Indicative

Sl. No.	ITEM	QP / INS CAT.	QP No. -	ACCEPTABLE SUPPLIER AS PER DATABASE	PLACE	SC APPL STATUS	REMARKS
				Additionally all vendors identified for Floor mounted Draw out type indoor LT Switchgear Panel			
				Additionally all vendors identified for Floor mounted fixed type indoor LT Switchgear Panel			
10.	Lighting & Welding Transformer	II	Q-007	Southern Electric	Chennai	A	
				Indcoil	Thane	A	
				Pragati	Thane	A	
				Prayog	Pune	A	
				Precise	Mumbai	A	
				Logicstat	Delhi	A	
				Gujarat Plug in	Vadodara	A	
				AE	Thane	A	
				Power Pack Enterprises	Mumbai	A	
				Amex Impex,	Ahmedabad	A	
11.	LT CT/PT/CBCT/ Control Transformer	III		Kappa	Bangalore	A	
				Southern Electric	Chennai	A	

Indicative

Sl. No.	ITEM	QP / INS CAT.	QP No. -	ACCEPTABLE SUPPLIER AS PER DATABASE	PLACE	SC APPL STATUS	REMARKS
				Precise	Mumbai	A	
				G&M	Baroda	A	CBCT Only
				Silkaans	Mumbai	A	
				Ind Coil	Mumbai	A	
				Pragati	Thane	A	
				Prayog	Pune	A	
				AE	Mumbai	A	
				Logicstat	Delhi	A	For control transformer only
				C&S Electric	Noida	A	For CT only
				Newtek	Aurangabad	A	For CT/PT/Control transformer
12.	1.1Kv LT Power Cable (From SMB to PCU)	Refer Note-2	Q-008	Universal Cable Ltd.	Satna	A	
				NICCO	Shamnagar, Kolkata	A	
				Torrent Cable Ltd	Nadiad	A	
				Incab	Pune	A	
				Hindustan Vidyut Products Ltd	Faridabad	A	
				KEI Industries	Bhiwadi	A	
				Delton Cable Ltd	Faridabad	A	A) Unarmoured cable all sizes. B) Armoured cable up to 3.5 x 240 sq. Mm with GI strip armour and 1CX70 sq mm with Al strip armour

Indicative

Sl. No.	ITEM	QP / INS CAT.	QP No. -	ACCEPTABLE SUPPLIER AS PER DATABASE	PLACE	SC APPL STATUS	REMARKS
				Paramount Cable	Khushkhera	A	
				Polycab Wires Pvt. Ltd	Daman	A	
				Gemscabs Industries	Bhiwadi	A	
				Cords Cables	Bhiwadi	A	
				Havells India Ltd.	Alwar	A	
				Sri ram Cables	Bhiwadi	A	
				Ravin Cables	Pune	A	
				Thermocables	Hyderabad	A	
				Sbee Cables	Bangalore	A	
				Suyog Cables	Vadodara	A	
				Gupta Power Cables	Khurda	A	
				Finolex	Pune	A	
				Scot Innovation wires and cables	Baddi	A	
				Anhui Hualing	China	A	
				LS Cable	Korea	A	
				Radiant Cables	Hyderabad	A	
				Tirupati Plastomatics	Jaipur	A	
				Apar Industries	Umbergaon	A	
				Special Cables	Rudrapur	A	
13.	1.1 KV Control Cable	Refer Note-2	Q-009	Universal Cable Ltd.	Satna	A	

Indicative

Sl. No.	ITEM	QP / INS CAT.	QP No. -	ACCEPTABLE SUPPLIER AS PER DATABASE	PLACE	SC APPL STATUS	REMARKS
				NICCO	Shamnagar , Kolkata	A	
				Torrent Cable Ltd	Nadiad	A	
				Incab	Pune	A	
				Polycab WiresPvt. Ltd	Daman	A	
				Hindustan Vidyut Products Ltd	Faridabad	A	
				KEI Industries	Bhiwadi	A	
				Delton Cable Ltd	Faridabad	A	
				Paramount Cable	Khushkher a	A	
				Gemscabs Industries	Bhiwadi	A	
				Cords Cables	Bhiwadi	A	
				SPM Cables	Hyderabad	A	
				Elkay Telelink	Faridabad	A	
				Havells India Ltd.	Alwar	A	
				R.R. Kabel	Silvasa	A	
				Ravin Cables	Pune	A	
				Gupta Power cable	Khurda	A	
				Thermocables	Hyderabad	A	
				Finolex	Pune	A	
				Sbee Cables	Bangalore	A	
				Suyog Cables	Vadodara	A	
				Scot Innovation wires and Cables	Baddi	A	
				Anhui Hauling	China	A	

Indicative

Sl. No.	ITEM	QP / INS CAT.	QP No. -	ACCEPTABLE SUPPLIER AS PER DATABASE	PLACE	SC APPL STATUS	REMARKS
				LS Cable	Korea	A	
				Radiant Cables	Hyderabad	A	
				Tirupati Plastomatics	Jaipur	A	
				Apar Industries	Umbergaon	A	
				Special Cables	Rudrapur	A	
14.	HT Cable Upto 11KV	Refer Note 2	Q-010	Universal Cable Ltd.	Satna	A	
				NICCO	Shamnagar, Kolkata	A	
				Torrent Cable Ltd	Nadaid	A	
				Incab	Pune	A	
				Polycab Wires Pvt. Ltd	Daman	A	
				KEI Industries	Bhiwadi	A	
				Havells India Ltd.	Alwar	A	
				Sri ram Cables	Bhiwadi	A	
				Krishna Electrical Industries Ltd	Gwalior	A	
				Apar Industries	Valsad	A	
				Finolex	Pune	A	
				KEC International	Vadodara	A	
				Tirupati Plastomatics	Jaipur	A	
				Gupta Power	Kashipur	A	
				Paramount	Khuskhera	A	

Indicative

Sl. No.	ITEM	QP / INS CAT.	QP No. -	ACCEPTABLE SUPPLIER AS PER DATABASE	PLACE	SC APPL STATUS	REMARKS
				Gemscab	Bhiwadi	A	
				Sterlite	Haridwar	A	
				Gupta Power	Kashipur	A	
15.	HT Cable upto 33KV	Refer Note 2	Q-011	Universal Cable Ltd.	Satna	A	
				Torrent Cable Ltd	Nadiad	A	
				Polycab Wires Pvt. Ltd	Daman	A	
				KEI Industries	Bhiwadi	A	
				Havells India Ltd.	Alwar	A	
				Apar Industries	Valsad	A	
				Finolex	Pune	A	
				KEC International	Vadodara	A	
				Gupta Power	Kashipur	A	
				Paramount	Khuskhera	A	
				Gemscab	Bhiwadi	A	
				Sterlite	Haridwar	A	
				Gupta Power	Kashipur	A	
16.	DC Cable (Interconnecting SPV Modules, SPV Module to SMB) As per NTPC specification	I	Q-012	Siechem	Pondicherry	A	Upto 35 sq.mm.

Indicative

Sl. No.	ITEM	QP / INS CAT.	QP No. -	ACCEPTABLE SUPPLIER AS PER DATABASE	PLACE	SC APPL STATUS	REMARKS
				Apar	Khatalwada	A	Conditions apply
17.	Battery (Ni-Cd)	II	Q-013	M/S HBL-Power System	Hyderabad	A	Up to 990 Ah with conditions
				M/S Amcosaft	Bangalore	A	8Ah to 990Ah- KPH type 10Ah to 1365 Ah- KPM type 11Ah to 1550Ah – KPL type
18.	Battery Plante /Tubular	II	Q-014	M/s Exide	Kolkata	A	
				Hoppeke	Brilon,Germany	A	
19.	Battery charger	II	Q-015	M/s Amararaja	Tirupati	A	
				M/s HBL- Power System	Hyderabad	A	
				M/s Chhabi electrical	Jalgaon	A	
				M/s. Chloride Power	Kolkatta	A	
				M/s Statcon	Hapur	A	Up to 220, V 850 A
				M/s Dubas	Bangalore	A	Up to 220 V, 250 A
				M/s Saft Nife Power Systems	Singapore	A	
				M/s Masstek	Jalgaon	A	
20.	Earthing & Lightning Protection Material like GI Strip/GI Wire etc	III		Main contractor Approved Sources box subject to galvanization at NTPC approved sources as per Note-4			

Indicative

Sl. No.	ITEM	QP / INS CAT.	QP No. -	ACCEPTABLE SUPPLIER AS PER DATABASE	PLACE	SC APPL STATUS	REMARKS
21.	HT Cable Termination Kits & Straight Through Jointing Kit (Heat shrinkable type)	III		M/s 3M Electro & Communication	Pune	A	Upto 33KV
				Raychem	Halol	A	Upto 33KV
				Hari Consolidated	Delhi	A	Upto 11KV(conditions apply)
22.	Lighting fixtures with accessories including lamp (Filament type)	II	Q-016	M/s Crompton	Mumbai	A	
				M/s Bajaj Electricals	Mumbai	A	
				M/s Philips	Noida	A	
				M/s Wipro	Mumbai	A	
				M/s Surya Roshni	Noida	**A**	Conditions apply
23.	Lighting fixtures with accessories including lamp (LED type)	II	Q-017	M/ s Wipro	Pune	A	Conditions apply
				M/s Surya Roshni	Noida	A	Conditions apply
				M/s Bajaj	Mumbai	A	Conditions apply
				M/s Goldwyn	Noida	A	Conditions apply
24.	MCB Boxes/Junction boxes / Link Boxes/ Test Link Box/	III		Main Contractor approved sources with galvanization from NTPC approved sources			BOIs preferably with CE/VDE/UL/CSA marked or BIS approved with valid CML no, Refer Note-6

Indicative

Sl. No.	ITEM	QP / INS CAT.	QP No. -	ACCEPTABLE SUPPLIER AS PER DATABASE	PLACE	SC APPL STATUS	REMARKS
	Adopter box, Switch Boxes, Pull Boxes (Hot Dip Galvanized)						
25.	Industrial /welding receptacles & boxes	III		Schneider	Nasik	A	
				M/s BCH	Faridabad	A	
				M/s Ajmera	Mumbai	A	
				M/s. Sakthi & Crown	Chennai	A	
				Any other make having CE / UL / CSA mark or BIS approval with valid CML number.			
26.	PVC conduit/hume pipe/lighting wire/GI pipes/HDPE pipe/Structural Steel/ GI steel rigid conduit/ epoxy conduit	III		BIS licensee with valid CML number / ISI marked with valid CML number			
27.	MV Switchgear Panel (Refer Note-5)	I	Q-018	BHEL	Bhopal	A	Upto 33KV
				Megawin	Salem	A	Upto 33KV
				L&T	Ahmednagar	A	Upto 33KV
				Siemens	Mumbai	A	Upto 33KV

Indicative

Sl. No.	ITEM	QP / INS CAT.	QP No. -	ACCEPTABLE SUPPLIER AS PER DATABASE	PLACE	SC APPL STATUS	REMARKS
				Jyoti	Vadodara	A	Upto 33KV
				ABB	Nasik	A	Upto 33KV
				Schneider	Kolkata	A	Upto 11KV -Salt lake works -VG series Interrupter made at Salt Lake Works
28.	MV Vacuum Type Circuit Breaker	(part of Swgr MQP)		Siemens	Mumbai	A	Upto 33kv
				BHEL	Bhopal	A	Upto 33kv
				L&T	Ahmednagar	A	Upto 33kv
				ABB	Nasik	A	Upto 33kv
				Megawin	Salem	A	Upto 33kv
				Jyoti	Vadodara	A	Upto 33kv
				Schneider	Kolkata	A	Upto 11kv
29.	IEC 61850 compliant Numerical Protection Relays	(Part of Swgr MQP)		SEL	Pullman, USA	A	
				ALSTOM T&D	Stafford, UK	A	P14X, P34X, P44X, P64X, P74X models only.
				ALSTOM T&D	Chennai	A	P14X, P24X, P34X, P44X, P64X, P74X models only.
				ABB	Finland	A	

Indicative

Sl. No.	ITEM	QP / INS CAT.	QP No. -	ACCEPTABLE SUPPLIER AS PER DATABASE	PLACE	SC APPL STATUS	REMARKS
				ABB	Baroda	A	For 6XX Series
				GE Multilin	Zamudio, Vizcaya, Spain/ Markham, Ontario, Canada	A	F-650 only
				Schneider	Stone, UK	A	PX30, PX40, VAMP 5X and VAMP 2XX models only.
				Siemens	Germany	A	7SX Series only
				Siemens	Goa	A	7SR2X series only
30.	Single Rod Air Terminal Type Solar Array Lightning Arrestor	III		Main Contractor approved sources: subject to manufacturer / supplier having valid Type Test Report as per IS 2309 or equivalent Standard			
31.	ESE Type Solar Array Lightning Arrestor	III		Main Contractor approved sources: subject to manufacturer / supplier having valid Type Test Report as per latest version of NF C 17-102 & country of origin documents			
32.	Lighting Poles	III		BIS Licensee as per IS 2713			

Indicative

Sl. No.	ITEM	QP / INS CAT.	QP No. -	ACCEPTABLE SUPPLIER AS PER DATABASE	PLACE	SC APPL STATUS	REMARKS
33.	Cable Lug	III		M/s Dowell	Mumbai	A	
				M/s Billets Elektro Werke Ltd. (3 D)	Umbergaon	A	
				M/s Chetna	Nasik	A	
				Additional Vendors with Make-Model having mark of VDE/ UL /CSA / BIS with CML no. Refer Note-1			
34.	Cable Gland	III		Any Make-Model having mark of VDE/ UL /CSA / BIS with CML no. Refer Note-1			
35.	GI Cable Tray, fitting, accessories including bends	Refer Note-3	Q-019	Inar Profiles Ltd	Enkapalli (Vishakhapatnam)	A	
				Vatco	Mumbai	A	Galvanization at Sigma Mumbai
				Indiana cable trays	Mumbai	A	Galvanization at Karamtara galvanizer- Mumbai
				Industrial Perforation	Kolkata	A	Galvanized and offered for inspection at M/s Industrial Perforation Pvt Ltd, Ganganagar , Kolkata, WB
				Ratan Projects	Howrah	A	Galvanization at DMP Projects- Howrah
				India Electric Syndicate	Kolkata	A	Galvanization at BMW Industries/B.P Projects- Howrah
				Steelite engg.	Mumbai	A	
				Premier Power Products	Howrah	A	Galvanising at Neha Galvaniser- Howrah
				Indiana Gratings	Pune	A	
				M.J. Engineering	Okhla/ Bhiwadi	A	
				T.R.G	Chennai	A	Galvanization at TM Radhakrishna Chetty & Co-Chennai
				Amtech	Pune	A	Galvanization at B.G. Shirke - Pune

Indicative

Sl. No.	ITEM	QP / INS CAT.	QP No. -	ACCEPTABLE SUPPLIER AS PER DATABASE	PLACE	SC APPL STATUS	REMARKS
				Kannade Anand Udyog	Mumbai	A	Fabrication at their units: Plot No. 42, Morivali, MIDC Thane & Plot No.: D-35 Anand Nagar MIDC, Addl. Ambernath , Dist.Thane Galvanization and offer the galvanized cable trays for inspection at D-34 Anand Nagar MIDC, Addl. Ambernath, Dist.Thane.
				Rukmani	Raipur	A	Ladder type cable trays only
				Passive Infra	Hasangarh (Rohtak)	A	
				Unitech Fabricators & Engineers	Howrah/ Hoogly (Kolkata)	A	
				Patny System	Hyderabad	A	
				Rabi Engg	Kolkata	A	Galvanizing from NTPC approved sources
				MKSD Industries	Taloja	A	Galvanising at Encorp Power trans PVT Ltd, Palghar
				Reliable Sponge	Kalunga	A	
				Rukmani	Hoogly	A	Galvanization at Rukmani Fab & Gal- Howrah
36.	Cable Tray Flexible Tray Support System	Refer Note-3	Q-020	Vatco	Mumbai	A	Galvanising at Sigma Mumbai
				Inar profiles	Enkapalli	A	
				Industrial perforations	Kolkata	A	

Indicative

Sl. No.	ITEM	QP / INS CAT.	QP No. -	ACCEPTABLE SUPPLIER AS PER DATABASE	PLACE	SC APPL STATUS	REMARKS
				Premier power products	Howrah	A	Galvanising at Neha Galvaniser- Howrah
				Steelite engg.	Mumbai	A	
				Indiana gratings	Pune	A	Galvanising at Poona Galvaniser- Pune
				Amtech	Pune	A	Galvanising at B.G. Shirke- Pune
				Ratan Projects	Howrah	A	Galvanization at NTPC approved sources
				MKSD Industries	Taloja	A	Galvanising at Encorp Power trans PVT Ltd, Palghar
37.	Piping – ERW (IS 1239)	III		Main Contractor approved sources; with valid BIS license			
38.	INSTRUMENTATION CABLE	REFER NOTE-2	Q-031	DELTON CABLES LTD	FARIDABAD	A	PVC, FRLS TYPE
				PARAMOUNT COMMUNICATION LTD	KHUSHKHERA	A	PVC, FRLS TYPE
				CORDS CABLE INDUSTRIES LTD	BHIWADI/ KAHARANI	A	PVC, FRLS TYPE
				KEI INDUSTRIES LTD	BHIWADI	A	PVC, FRLS TYPE
				POLYCAB WIRES PVT. LTD	DAMAN	A	PVC, FRLS TYPE
				THERMOCABLES	HYDERABAD	A	PVC, FRLS TYPE
				ELKAY TELELINKS	FARIDABAD	A	PVC, FRLS TYPE
				GUPTA POWER	KHURDHA	A	PVC, FRLS TYPE
				CMI	Faridabad	A	PVC, FRLS TYPE
				Universal Cables	Satna	A	PVC, FRLS TYPE

Indicative

Sl. No.	ITEM	QP / INS CAT.	QP No. -	ACCEPTABLE SUPPLIER AS PER DATABASE	PLACE	SC APPL STATUS	REMARKS
39.	FIRE ALARM PANEL (-MICROPROCESSOR BASED) & MANNUAL CALL POINTS	II	Q-032	NOTIFIER	USA	A	
				TYCO	USA	A	SIMPLEX BRAND
				AUTRONICA	NORWAY	A	
				SCHRACK	AUSTRIA	A	
				EDWARDS	USA	A	
				Shield Fire Safety	UK	A	
40.	ADDRESSABLE DETECTORS (MULTI SENSOR), INTERFACE UNITS ,HOOTER CUM STROBE & HOOTER	II	Q-033	NOTIFIER	USA/GURGAON	A	
				TYCO	USA	A	SIMPLEX BRAND
				AUTRONICA	NORWAY	A	
				SCHRACK	AUSTRIA	A	
				EDWARDS	USA	A	
				Shield Fire Safety	UK	A	

Indicative

Sl. No.	ITEM	QP / INS CAT.	QP No. -	ACCEPTABLE SUPPLIER AS PER DATABASE	PLACE	SC APPL STATUS	REMARKS
41.	FIBRE OPTIC CABLES	III		BIRLA ERICSSON OPTICAL	REWA	A	
				AKSH FIBER	BHIWADI	A	
				FINOLEX	PUNE/GOA	A	
				R&M	SWITZERLAND	A	
				HFCL	GOA	A	
				Molex	UK	A	
				Corning	USA	A	
42.	PLC BASED SCADA SYSTEM	I	Q-034	SIEMENS	NASIK	A	
				SCHNEIDER ELECTRIC	BANGALORE	A	
				ROCKWELL AUTOMATION	SAHIBABAD	A	
				ABB	BANGALORE	A	
				GE INTELLIGENT PLATFORM	BANGALORE	A	
43.	ENCLOSURE FOR PANELS	*		PYROTECH	UDAIPUR	A	*Part of PLC Based SCADA System
				PENTAIR (HOFFMAN)	BANGALORE	A	*Part of PLC Based SCADA System
				RITTAL	BANGALORE	A	*Part of PLC Based SCADA System
				MPP	Bangalore	A	*Part of PLC Based SCADA System

Indicative

Sl. No.	ITEM	QP / INS CAT.	QP No. -	ACCEPTABLE SUPPLIER AS PER DATABASE	PLACE	SC APPL STATUS	REMARKS
44.	UPS SYSTEM with ACDB	I	Q-036	FUJI ELECTRIC	JAPAN	A	
				Vertiv Energy (Emerson)	AMBERNATH	A	APPROVED UP TO 160 KVA, 1Φ
				HITACHI HIREL	GANDHINAGAR	A	APPROVED UP TO 160 KVA, 1Φ
				Vertiv Energy (DB Power)	PUNE	A	APPROVED UP TO 125 KVA, 1Φ
				KELTRON	TRIVENDRUM	A	APPROVED UP TO 150 KVA, 1Φ
				GUTOR	SWITZERLAND	A	
				AEG(Saft)	Germany	A	
45.	CCTV COMPONENTS IP Based (Refer Note-7)	II	Q-037	BOSCH	BANGALORE	A	1.All active main CCTV components like Camera, Server / Storage, Joystick, Video management software will be of Bosch make and to be procured from ***M/s. Bosch Ltd., Bangalore*** [Work address: ***Hosur Road, Adugodi, Bangalore – 560 030***]. 2.Other items like workstation, keyboard, monitors, network switches, media converters, interconnecting cables will be supplied as per LOA agreed source.
				Axis	Sweden	A	1-CCTV components will be of Axis communication AB,Sweden make & Video Management Software will be of Milestone Brand. 2.To make the system complete, other indigenous items like server/OWS/PC, Network Switch, Cables etc are to be procured from NTPC approved sources which will be tied up during the finalization MQP 3. Toshniwal Industries Pvt lts (works address: industrial Estate, Makhupura, Ajmer-305002, Rajasthan, India) will

Indicative

Sl. No.	ITEM	QP / INS CAT.	QP No. -	ACCEPTABLE SUPPLIER AS PER DATABASE	PLACE	SC APPL STATUS	REMARKS
							do the complete integration of CCTV System and installation at site which is noted by NTPC.
				Honeywell	Gurgoan	A	CCTV active component including explosion proof camera along with VMS will be honeywell china make
46.	Fire Extinguisher	III		BIS approved sources with valid BIS License.			
47.	Circuit Breaker upto 220 Kv (SF6 & outdoor type)	I	Q-023	Siemens	Aurangabad	A	
				ABB	Vadodara	A	
				CGL	Nasik	A	
				BHEL	Hyderabad	A	
				GE	Kanchipuram	A	
48.	Isolator upto 220 kv (outdoor type)	I	Q-024	GR Power	Hyderabad	A	
				Hivelm	Chennai	A	
				S&S	Pondicherry	A	
				Switchgear & Structurals	Hyderabad	A	
				Siemens Ltd	Hyderabad	A	
49.	PT (Outdoor Type, upto 33Kv)	I	Q-025	Mehru	Bhiwadi	A	
				ABB	Vadodara	A	

Indicative

Sl. No.	ITEM	QP / INS CAT.	QP No. -	ACCEPTABLE SUPPLIER AS PER DATABASE	PLACE	SC APPL STATUS	REMARKS
				GE	Hosur	A	
				CGL	Nasik	A	
50.	CT (Outdoor Type, upto 220 Kv Oil Filled type)	I	Q-026	Mehru	Bhiwadi	A	
				GE	Hosur	A	
				ABB	Vadodara	A	
				CGL	Nasik	A	
				BHEL	Jhansi/Bhopal	A	
				Vishal Transformer	Meerut	A	UP TO 33 KV CT ONLY
				Heptacare	Meerut	A	UP TO 33 KV CT ONLY
51.	CVT (Outdoor Type, upto 220 Kv	I	Q-027	GE	Hosur	A	
				ABB	Vadodara	A	
				CGL	Nasik	A	
				BHEL	Jhansi/Bhopal	A	
52.	LA (Outdoor Type, upto 220 Kv)	I	Q-028	Oblum	Hyderabad	A	
				Lamco	Hyderabad	A	
				Elektrolite	Jaipur	A	UP TO 33 KV ONLY.
				CGL	Nasik	A	

Indicative

Sl. No.	ITEM	QP / INS CAT.	QP No. -	ACCEPTABLE SUPPLIER AS PER DATABASE	PLACE	SC APPL STATUS	REMARKS
53.	AB Tariff energy meter	II	Q-029	SEMS	Udaipur/Solan	A	Inspection with representative from Local Electricity Board.
				Elster	Mumbai	A	
				L&T	Mysore	A	With CMS software.
54.	Conductor	III		Smita	Ghaziabad	A	
				Gupta Power Infra	Bhubaneswar	A	
				Saravathy	Bangalore	A	
				Galaxy	Sangli	A	
				Hindustan Vidyut products	Faridabad	A	
				Apar Industries	Vadodara / Silvassa	A	
				Hira Cables	Hirakud	A	
				JSK	Silvasa	A	
				Cabcon	Kolkatta	A	
55.	Disc Insulator/Long Rod Insulator	III		Aditya Birla	Rishra	A	
				IEC	Bhopal	A	
				WSI	Chennai	A	
				BHEL	Bangalore	A	
				Imperial Ceramics	Bikaner	A	Upto 90KN
				Modern Insulator	Abu Road	A	
				Goldstone	Hyderabad	A	For Long Rod Insulator only

Indicative

Sl. No.	ITEM	QP / INS CAT.	QP No. -	ACCEPTABLE SUPPLIER AS PER DATABASE	PLACE	SC APPL STATUS	REMARKS
56.	Bus Post Insulator	III		Aditya Birla	Halol	A	
				IEC	Bhopal	A	
				WSI	Chennai	A	
				MODERN Insulator	Abu Road	A	
				SARAVANA Global Energy	Cuddalore	A	
57.	Clamps & connectors	III		KLEMMEN ENGG	CHENNAI	A	
				MILIND	MUMBAI	A	
				EMI	MUMBAI	A	
				NOOTAN ENGG	MUMBAI	A	
				TAG CORPORATION	CHENNAI	A	
				ITPL	MUMBAI	A	
				RASHTRAUDYOG	KOLKATA	A	
				PEE VEE ENGG	BANGALORE	A	
				MEGHA Engg	CHENNAI	A	
				EXALT	Mumbai	A	
58.	Insulator hardware, conductor accessories & earthwire accessories	III		RASHTRA UDYOG	KOLKATA	A	
				IAC	KOLKATA	A	

Indicative

Sl. No.	ITEM	QP / INS CAT.	QP No. -	ACCEPTABLE SUPPLIER AS PER DATABASE	PLACE	SC APPL STATUS	REMARKS
				ITPL	MUMBAI	A	
				EMI	MUMBAI	A	
				EMTT	Kolkatta	A	
59.	Aluminium tube	III		HINDALCO	RENUKUT	A	
				INDALCO	ALUPURAM	A	
				CENTURY EXTRUSIONS	KOLKATA	A	
				JINDAL ALUMINUM TUBE	BANGALORE	A	
				ALOM EXTRUSIONS	KOLKATA	A	
				BALCO	KORBA	A	
				SUDAL	NASIK	A	
				Banco	Vadodara	A	
60.	Switchyard Control & Relay Panel / SAS	I	Q-030	GE (Alstom)	Chennai	A	
				Siemens	Kalwa/Goa	A	
				ABB	Peenya	A	
				Schneider	Noida	A	
				BHEL	Bhopal	A	Approved for C&R Panel only
61.	Numerical Relays for Switchyard	(part of C&R MQP)		GE	UK/Chennai	A A	
				Siemens	Germany	A	

Indicative

Sl. No.	ITEM	QP / INS CAT.	QP No. -	ACCEPTABLE SUPPLIER AS PER DATABASE	PLACE	SC APPL STATUS	REMARKS
				ABB	Sweden/ Bangalore	A	
				Schneider	UK	A	
62.	Transformer (Oil filled type) Refer Note-8	I	Q-021	BHEL	Bhopal	A	up to 400 kV Class
				GE (T&D)	Naini	A	up to 400 kV Class
				Toshiba	Hyderabad	A	up to 400 kV Class
				TELK	Agnamaly, Kerala	A	up to 400 kV Class
				ABB	Vadodara	A	up to 400 kV Class
				CG Power & Industrial Solutions Ltd.	Kanjur Marg	A	up to 400 kV Class
				EMCO	Thane	A	up to 400 kV Class
				BHEL	Jhansi	A	up to 220 kV Class
				Schneider	Vadodara	A	up to 50 MVA, 132 kV Class
				T&R	Ahmedabad	A	up to 16 MVA, 132 kV Class
				Kanohar	Merrut	A	up to 16 MVA, 33 kV Class
				EMCO	Jalgaon	A	up to 16 MVA, 33 kV Class
				Kirloskar	Mysore	A	up to 16 MVA, 33 kV Class
				Andrew Yule	Chennai	A	up to 10 MVA, 33 kV Class
				Tesla (unit-2)	Bhopal	A	up to 5.0 MVA, 33 kV Class
				Indotech Transformers	Chennai	A	up to 16 MVA, 11 kV Class
				PETE Hammond	Hyderabad	A	up to 10 MVA, 33 kV Class

Indicative

Sl. No.	ITEM	QP / INS CAT.	QP No. -	ACCEPTABLE SUPPLIER AS PER DATABASE	PLACE	SC APPL STATUS	REMARKS
				CG Power & Industrial Solutions Ltd.	Malanpur	A	up to 7.5 MVA, 33 kV Class
				ECE	Sonepat	A	up to 4.0 MVA, 11 kV Class
				Voltamp	Savli	A	up to 3.5 MVA, 33 kV Class
				Kirloskar	Pune	A	up to 2.0 MVA, 33 kV Class
				RAYCHEM RPG	Pune	A	Up to 5 MVA, 33 kV Class
				Esennar	Medak	A	Up to 16 MVA, 66 kV Class
				Technical Associate Ltd	Sitarganj	A	up to 16 MVA, 33 kV Class, Conditions Apply
				Prime Meiden Ltd	Nellur	A	up to 63 MVA, 132 kV Class
				KRYFS Power Components Ltd	Silvassa	A	Up to 2.5 MVA, 33 kV Class
				Sudhir Transformers	Bangalore	A	Upto 12.5 MVA, 33KV Class
63.	Dry Type	I	Q-022	ABB	Savli	A	up to 8 MVA, 24 kV Class
	Transformer			Raychem	Pune	A	Up to 3.5 MVA, 33 kV Class
	(refer note-8)			Toshiba	Hyderabad	A	Up to 2.0 MVA, 33 kV Class
				BHEL	Jhansi	A	Up to 6.3 MVA, 33 kV Class
				Kirloskar	Pune	A	Up to 4.0 MVA, 33 kV Class
				Voltamp	Savli	A	Up to 3.25 MVA, 33 kV Class
				PETE Hammond	Hyderabad	A	Up to 95 KVA, 33 kV Class

Under Sub Supplier approval status as per NTPC column:
A: mean that manufacturer proposed main contractor for this items is acceptable to NTPC.
CA: mean that manufacturer proposed by main contractor is acceptable to NTPC with certain conditions

Indicative

DR-mean that manufacturer proposed by main contractor for the items will be assessed by NTPC. Main contractor is obliged to procure the item from "DR" category manufacturer only after written approval from NTPC

Under QP / INSPN CATEGORY column:

CAT-I : For these items the Quality Plans approved by NTPC & final acceptance will be on physical inspection & witness by NTPC

CAT-II : For these items the Quality Plans approved by NTPC. However no physical inspection shall be done by NTPC. The final acceptance by NTPC shall be on basis of verification of documents as per approved QP

CAT-III : For these items Main supplier approves the Quality Plans. The final acceptance by NTPC shall be on basis of certificate of conformance by the main supplier.

General Notes:

1) Vendor list & category of the mandatory spares shall be as mentioned above.
2) For item not appearing in the above list, Main Contractor to approach NTPC for acceptable vendors & inspection categorization of the same.
3) NTPC Approval conditions to above identified vendors shall be adhered to. Vendor's approval conditions will be informed on specific request of Main Contractor.

Note-1- "TYPE TEST REPORT AS PER EN 50521" OR "VDE / CE / UL / CSA MARKING CERTIFICATION PREFERABLY FROM THIRD PARTY AGENCY" OR "BIS APPROVAL LETTER" SHALL BE SUBMITTED FOR NTPC's VERIFICATION /INFORMATION.

Note-2-

Category of inspection for Instrumentation cable/LT Cable(Power & controls) :

TOTAL CONTRACT QUANTITY PER SIZE	CATEGORY OF INSPECTION
LESS THAN EQUAL TO 1KM PER SIZE/TYPE	CAT-III AND SUBMISSION OF TC AND CERTIFICATE OF CONFORMANCE BY MAIN CONTRACTOR
TOTAL QUANTITY UPTO 2.5 KM PER SIZE/TYPE	CAT-II

Indicative

TOTAL QUANTITY MORE THAN 2.5 KM PER SIZE/TYPE	CAT-I

Category of inspection for HT cables

TOTAL CONTRACT QUANTITY PER SIZE/TYPE	CATEGORY OF INSPECTION
LESS THAN EQUAL TO 500 M	CAT-III
GREATER THAN 500 M	CAT-I

Note-3-

FOR CABLE TRAYS THE CATEGORY OF INSPECTION SHALL BE AS FOLLOWS

TOTAL CONTRACT QUANTITY PER SIZE /TYPE	CATEGORY OF INSPECTION
LESS THAN EQUAL TO 1KM	CAT-III AND SUBMISSION OF TC AND CERTIFICATE OF CONFORMANCE BY MAIN CONTRACTOR
GREATER THAN 1 KM AND LESS THAN EQUAL TO 5 KM	CAT-II
GREATER THAN 5 KM	CAT-I

FOR CABLE TRAYS SUPPORT SYSTEM:

THE CATEGORY OF INSPECTION SHALL BE AS FOLLOWS

TOTAL CONTRACT QUANTITY PER TYPE	CATEGORY OF INSPECTION
LESS THAN EQUAL TO 1KM OF SUPPORT CHANNEL	CAT-III AND SUBMISSION OF TC AND CERTIFICATE OF CONFORMANCE BY MAIN CONTRACTOR

Indicative

Sl. No.	ITEM	QP / INS CAT.	QP No. -	ACCEPTABLE SUPPLIER AS PER DATABASE	PLACE	SC APPL STATUS	REMARKS

GREATER THAN TO 1KM AND LESS THAN 5 KMS OF SUPPORT CHANNEL	CAT-II
GREATER THAN TO 5KM OF SUPPORT CHANNEL	CAT-I

TOTAL CONTRACT QUANTITY PER SIZE / TYPE	CATEGORY OF INSPECTION
LESS THAN EQUAL TO 500 NOS. OF CANTILEVER ARMS	CAT-III AND SUBMISSION OF TC AND CERTIFICATE OF CONFORMANCE BY MAIN CONTRACTOR
GREATER THAN TO 500 NOS. AND LESS THAN 2500 NOS CANTILEVER ARMS	CAT-II
GREATER THAN TO 2500 NOS. CANTILEVER ARMS	CAT-I

Note-4-

1. M/s M J Engg,Delhi 2. M/s Jamna Metal,Delhi 3. M/s A.V. Engg, Kolkata 4. M/s Inar Profiles, Vishakapatnam 5. M/s Anand Udyog, Mumbai 6. M/s Techno Engg,Chandigarh 7. M/S Steelite Engg, Mumbai	8. M/s National Galvanizer, Kolkata 9. M/s Unistar Galvanizer, Kolkata 10. M/s B.P. Project. Kolkata 11. M/s Bajaj Pune 12. M/s Electrocare Industries, Mumbai 13. M/s B.G. Shirke, Pune 14. M/s Gurpreet Galvanizer, Hyderabad	15. M/s Sigma, Mumbai 16. M/s Radhakrishnan Shetty, Chennai 17. Karamtara Mumbai 18.Poona Galvanizers Pune 19. Neha Galvanizer- Kolkata 20. Unitech Fabricators & Galvanizers- Hoogly 21. Patny Systems- Mehdak	22. Indian Gratings, Pune 23. Encorp Power trans PVT Ltd, Palghar 24. Reliable Sponge, Kalunga 25- Rukmani Fab & Gal- Howrah

Indicative

Note-5:

a. Raw material & Bought Out components for main equipment will be finalized with vendor identified by Main Contractor.

Note-6: "VDE / CE / UL / CSA MARKING CERTIFICATION PREFERABLY FROM THIRD PARTY AGENCY" OR "BIS APPROVAL LETTER" SHALL BE SUBMITTED FOR NTPC's VERIFICATION /INFORMATION.

Note-7: CCTV Components consists of Camera with motorized zoom lens, Enclosure, Pan Tilt arrangement, Matrix Switcher, Key Board with LCD, Digital Video Recorder, Monitor, Receiver Driver Unit, Code Distribution unit, Amplifier etc. shall be supplied from the principal manufacturer of CCTV and shall be identical make. Other than this item can be supplied from Indigenous local source approved by NTPC or Principal Manufacturer's approved source.

Note-8:

8.1 Raw material & bought out components for main equipment will be finalized with vendor identified by Main Contractor.

8.2 For Auxiliary Transformers (Oil Filled & Dry Type- below 1.0 MVA, 11 KV Class):

a. Main Contractor's approved sub-vendors will also be acceptable subject to sub-vendor shall have minimum two years of supply experience for similar rating & type of transformers.

b. NTPC will review the Routine Test Inspection Report, witnessed by Main Contractor as per IS 2026/IS 1180 for Oil Filled Transformer and as per IS 11171 for Dry type Transformer

Indicative

	PROJECT: **21 MW GANDHAR SOLAR PHOTO VOLTAIC PROJECT IN GUJARAT**	LIST OF ITEMS REQUIRZING QUALITY PLAN AND SUB- SUPPLIER APPROVAL				NTPC DOC NO	
	PACKAGE: DEVELOPMENT OF 21 MW GANDHAR SOLAR PHOTO VOLTAIC PROJECT IN GUJARAT					REV. NO.	0
	MAIN SUPPLIER:	SUB SYSTEM: CIVIL WORKS				DATE	07.08.2017
	CONTRACT NO.:						
SR. NO.	ITEM	QAP / INSP. CAT	QAP NO.	PROPOSED SUB SUPPLIER	PLACE OF MANUFACTURING	APPROVAL STATUS / CATEGORY	REMARKS
1.	**CEMENT**	**III**	-	BIS APPROVED SOURCES HAVING VALID BIS LICENCE	-	-	
2.	**CONSTRUCTION CHEMICALS - ADMIXTURES, PLASTISIZERS, RETARDERS WATER PROOFING COMPOUNDS GROUTS**	**III**	-	SIKA INDIA LTD	-	A	
				CICO TECHONOLOGIES LTD	-	A	
				FOSROC CHEMICALS (I) PVT LTD	-	A	
				BASF	-	A	
3.	**PAINT AND PAINTING SYSTEM**	**III**	-	BERGER	-	A	
				SHALIMAR PAINTS	-	A	
				JENSON AND NICHOLSON	-	A	
				KANSAI NEROLAC	-	A	
				AKZO NOBEL	-	A	
				ASIAN PAINTS	-	A	
4.	**GI PIPES**	**III**	-	BIS APPROVED SOURCES HAVING VALID BIS LICENCE	-		
5.	**BITUMEN ASPHALT**	**III**	-	ALL GOVERNMENT REFIINARIES	-		
6.	**PLASTIC/ PVC PIPES**	**III**	-	BIS APPROVED SOURCES HAVING VALID BIS LICENCE	-		
7.	**BITUMEN IMPREGNATED FIBER BOARD JOINT FILLER , BITUMEN SEALING COMPOUND**	**III**	-	BIS APPROVED SOURCES HAVING VALID BIS LICENCE	-		

INDICATIVE LIST

	PROJECT: **21 MW GANDHAR SOLAR PHOTO VOLTAIC PROJECT IN GUJARAT**	LIST OF ITEMS REQUIRZING QUALITY PLAN AND SUB- SUPPLIER APPROVAL				NTPC DOC NO	
	PACKAGE: DEVELOPMENT OF 21 MW GANDHAR SOLAR PHOTO VOLTAIC PROJECT IN GUJARAT					REV. NO.	0
	MAIN SUPPLIER:	SUB SYSTEM: CIVIL WORKS				DATE	07.08.2017
	CONTRACT NO.:						
SR. NO.	ITEM	QAP / INSP. CAT	QAP NO.	PROPOSED SUB SUPPLIER	PLACE OF MANUFACTURING	APPROVAL STATUS / CATEGORY	REMARKS
8.	**CERAMIC / VITRIFIED TILES**	**III**	-	BIS APPROVED SOURCES HAVING VALID BIS LICENCE	-	-	
9.	**PARTICLE BOARDS, PLYWOOD, MDF**	**III**	-	BIS APPROVED SOURCES HAVING VALID BIS LICENCE	-	-	
10.	**HIGH SOLID CONTENT LIQUID APPLIED URETHANE BASED ELASTOMERIC MEMBRANE FOR WATER PROOFING**	**III**	-	STP	-	A	
				IWL INDIA LTD	-	A	
				LLOYDS	-	A	
				CICO TECHONOLOGIES LTD	-	A	
				FOSROC CHEMICALS (I) PVT LTD	-	A	
11.	**POLYTHENE WATER STORAGE TANKS**	**III**	-	BIS APPROVED SOURCES HAVING VALID BIS LICENCE	-		
12.	**MINERAL WOOL FOR THERMAL INSULATION**	**III**		ROCKWOOL INDIA LTD.	HYDERABAD	A	
				PUNJSTAR INSULATION FIBRE COMPANY	BHILAI	A	
				LAPINUS	MALANPUR (MP)	A	
				MINWOOL	RAJANANDGAON	A	
				LLOYD INSULATION	BHILAI	A	
				GOENKA ROCKWOOL (I) PVT LTD	RAIPUR	A	
				SHREERAM EQUITECH PVT LTD	DURG	A	
				U.P. TWIGA	BULENDSHAHAR	A	

INDICATIVE LIST

	PROJECT: **21 MW GANDHAR SOLAR PHOTO VOLTAIC PROJECT IN GUJARAT**	LIST OF ITEMS REQUIRZING QUALITY PLAN AND SUB- SUPPLIER APPROVAL				NTPC DOC NO	
	PACKAGE: DEVELOPMENT OF 21 MW GANDHAR SOLAR PHOTO VOLTAIC PROJECT IN GUJARAT					REV. NO.	0
	MAIN SUPPLIER:	SUB SYSTEM: CIVIL WORKS				DATE	07.08.2017
	CONTRACT NO.:						
SR. NO.	ITEM	QAP / INSP. CAT	QAP NO.	PROPOSED SUB SUPPLIER	PLACE OF MANUFACTURING	APPROVAL STATUS / CATEGORY	REMARKS
13.	**CI PIPES**	**III**	-	BIS APPROVED SOURCES HAVING VALID BIS LICENCE			
14.	**MODULE MOUNTING STRUCTURES (MMS)**	**III**		MAIN CONTRACTOR'S APPROVED SOURCES			
15.	**GALAVANISED STEEL STRUCTURES FOR TRANSMISION LINE**	**I**		L&T	PITAMPUR	A	
				NAMPA STEEL	HOWRAH	A	
				UNITECH POWER TRANSMISSION LTD.	NAGPUR	A	
				L&T	PONDICHERRY	A	
				ASSOCIATED POWER STRUCTURES	VADODARA	A	
				GOOD LUCK STEEL TUBES	SIKANDRABAD	A	
				R.S. INFRAPROJECTS PVT. LTD	SURAJPUR	A	
				ADVANCE STEEL TUBE	SAHIBABAD	A	
				RICHARDSON & CRUDDAS (1972) LTD	NAGPUR	A	
16.	**GALVANISED STEEL STRUCTURE (LATTICE & PIPE)**	**I**		GOOD LUCK STEEL TUBES	SIKANDRABAD	A	
				RICHARDSON & CRUDDAS (1972) LTD	NAGPUR	A	
				L&T	PONDICHERY	A	
				L&T	PITAMPUR	A	
				R.S. INFRAPROJECTS PVT. LTD	SURAJPUR	A	
				VIJAY TRANSMIISION P. LTD	RAIPUR	A	
				UNIQUE STRUCTURES & TOWERS LTD.	RAIPUR	A	

INDICATIVE LIST

	PROJECT: **21 MW GANDHAR SOLAR PHOTO VOLTAIC PROJECT IN GUJARAT**	LIST OF ITEMS REQUIRZING QUALITY PLAN AND SUB- SUPPLIER APPROVAL				NTPC DOC NO	
	PACKAGE: DEVELOPMENT OF 21 MW GANDHAR SOLAR PHOTO VOLTAIC PROJECT IN GUJARAT					REV. NO.	0
	MAIN SUPPLIER:	SUB SYSTEM: CIVIL WORKS				DATE	07.08.2017
	CONTRACT NO.:						
SR. NO.	ITEM	QAP / INSP. CAT	QAP NO.	PROPOSED SUB SUPPLIER	PLACE OF MANUFACTURING	APPROVAL STATUS / CATEGORY	REMARKS
				VATCO ELEC-POWER PVT. LTD.	NAVIMUMBAI	A*	*Galvanising at M/s Sigma Galvaniser, Navi Mumbai
				R.S. INFRAPROJECTS PVT. LTD	GHAZIABAD	A	
				ADVANCE STEEL TUBE ,	SAHIBABAD	A	
				SANGAM STRUCTURES LTD.	ALLAHABAD	A	
				NEW MODERN TECHNOMECH	MAYURBHANJ (OR)	A	
				UNITECH POWER TRANSMISSION LTD.	NAGPUR	A	
				ASSOCIATED POWER STRUCTURES	VADODARA	A	
				RELIABLE SPONGE PVT LTD,	KALUNGA, ODISHA	A	
17	**FOUNDATION BOLT**	**III**		MAIN CONTRACTOR'S APPROVED SOURCES			

INDICATIVE LIST

	PROJECT: **21 MW GANDHAR SOLAR PHOTO VOLTAIC PROJECT IN GUJARAT**	LIST OF ITEMS REQUIRZING QUALITY PLAN AND SUB- SUPPLIER APPROVAL				NTPC DOC NO	
	PACKAGE: DEVELOPMENT OF 21 MW GANDHAR SOLAR PHOTO VOLTAIC PROJECT IN GUJARAT					REV. NO.	0
	MAIN SUPPLIER:	SUB SYSTEM: CIVIL WORKS				DATE	07.08.2017
	CONTRACT NO.:						
SR. NO.	ITEM	QAP / INSP. CAT	QAP NO.	PROPOSED SUB SUPPLIER	PLACE OF MANUFACTURING	APPROVAL STATUS / CATEGORY	REMARKS

LEGENDS:
1. SYSTEM SUPPLIER/SUB-SUPPLIER APPROVAL STATUS CATEGORY (SHALL BE FILLED BY NTPC)
A – For these items proposed vendor is acceptable to NTPC. To be indicated with letter “A” in the list along with the condition of approval, if any.
DR – For these items “Details required” for NTPC review. To be identified with letter “DR” in the list.

2. QP/INSPN CATEGORY:
CAT-I : For these items the Quality Plans are approved by NTPC and the final acceptance will be on physical inspection witness by NTPC.
CAT-II : For these items the Quality Plans approved by NTPC. However no physical inspection shall be done by NTPC. The final acceptance by NTPC shall be on the basis review of documents as per approved quality plan.
CAT-III : For these items Main Supplier approves the Quality Plans.
UNITS/ WORKS : Place of manufacturing Place of Main Supplier of multi units/works.

NOTE 1: For the items placed in CAT-III for Civil Works, the review and final acceptance shall be done by NTPC-EIC/ FQA on the basis of MTC / certificate of conformance in line with Indicative FQP / Technical Specifications.
NOTE 2: Clearance from NTPC Engineering required wherever the Proveness / Sub-QR criteria mentioned against that particular BOIs or Sub-Suppliers in the Technical specifications.

INDICATIVE LIST

Sl No	Equipment	Make	Make	Make	Make
1	Switchyard - Sub Vendor	Srex -220 kV	Siemens -132 kV	GE -220 kV	Hartek -132 kV
1.1	CB	Siemens	Siemens-3150 A		
1.2	ISO	Siemens	Siemens-1250 A	GR Power-1250 A	
1.3	CT	Mehru	Hepatcare	GE-400/1-1	
1.4	CVT	Siemens	GE-220kV/110V, 75VA, 8800pF		
1.5	BPI	IEC	Modern Insulators	Aditya Birla-220 kV	
1.6	LA	Oblum	Lamco	Oblum-216 kV, 10kA, Class -III, Polymer	
1.7	Disc Insulator	IEC	IEC-11 kV Disc, 120kN		
1.8	ACSR	Cabcon India	Cabcon India-Moose		
1.9	IPS Al tube	Banco			
1.10	GI Shield wire	Cabcon India			
1.11	Clamps & connectors	Legion Energy	Exalt Engineering		
1.12	Insulator hardware & accessories				
1.13	CRP	Siemens	GE		
1.14	Bay marshilling kiosk,	Pyrotech Electronics			
1.15	Metering CT	GE-400/1-1	Mehru		
1.16	Metering PT				
2	HT Cable	Polycab	KEC	Havells-1Cx300	CMI
3	LT Cable	Havells	Polycab	KEC	Special
4	LT Switchgear	Pyrotech Electronics			
5	HT Switchgear	Tri Square CMCS I/D	Siemens-CMCS I/D	BHEL	
6	ABT	Secure			
7	EHV cable	Diamer Kabel			

NTPC	SYSTEM EQUIPMENT: TRANSFORMERS UPTO 100 MVA, 132 kV CLASS SUB-SYSTEM:	STANDARD FIELD QUALITY PLAN CONFORMANCE TO: NTPC SPECIFICATION	QP No: 0000-999-QOE-J-001 REV No: 0 DATE: 01.11.2006 PAGE: 1 of 5 VALID UPTO: 31.10.2009	REVIEWED BY H Shekhar S D Singh O P Niranjan	APPROVED BY U R Khosla

Sl No	ACTIVITY AND OPERATION	CHARACTERISTICS	CLASS# OF CHECK	TYPE OF CHECK	QUANTUM OF CHECK	REFERENCE DOCUMENT	ACCEPTANCE NORMS	FORMAT OF RECORD	D*	REMARKS
1	2	3	4	5	6	7	8	9		10
1.00	**MATERIAL RECEIPT AND STORAGE**									
1.01		Inspection of item on receipt at site	B	Visual	100%	Packing List	Packing List	Logbook		
1.02		Condition of packages	B	Visual	-do-	Packing List	Good Condition	-do-		Material Damage Report in case of damage
1.03		Check for short supply, if any	C	Verify	-do-	Packing list	No item short	-do-		Report to Manufacturing Unit for short supply.
1.04		N2 pressure in transformer on receipt at site, if transformer is send with N2 - N2 pressure gauge	B	Visual	At the time of receipt & every fortnight	Mfr's Erection & Maint. Manual	Positive pressure/ Mfr Manual	-do-		In case pressure is zero, inform manufacturer for further necessary action.
1.05		Check oil level in the transformer, if transformer is send with oil - Oil level gauge	B	Visual	At the time of receipt & every fortnight	-do-	Upto the mark	-do-		In case oil level is low & winding is exposed, call manufacturer representative.
1.06		Check reading of shock recorder on receipt at site - Impact Recorder	B	Visual	At the time of receipt	-do-	Mfr's Erection & Maint. Manual	-do-		In case data recorded is above normal, inform manufacturer for further necessary action.
1.07		Safe unloading of material at site	C	Visual	Each Package		No damage			Material Damage Report in case of damage
1.08		Check safe storage & position for bushings	C	Visual	During storage	Mfr's Erection & Maint. Manual	Mfr's Erection & Maint. Manual	-do-		
1.09		Check oil level in condensor bushings - Oil level	B	Visual	At the time of receipt & every fortnight	-do-	Upto the mark	-do-		Fill in case the same is low
1.10		Check blanking of radiators (if sent separately)	B	Visual	100%		Intactness of blanking plates	-do-		In case of radiators blanks are missing, finshing of the same to be done & cover with new blanking plate.
1.11		Ensure covered storage for identified items (fans, pumps, WTI, OTI, breather, etc)	C	Visual	-do-	Mfr's Erection & Maint. Manual	No physical damage	-do-		Store Indoor
1.12		Safe storage of other materials (oil, conservator, radiator, etc)	C	Visual	-do-	-do-	No physical damage	-do-		Store in outdoor covered with tarpulin.

LEGEND: * RECORDS INDENTIFIED WITH "TICK" (√) SHALL BE ESSENTIALLY INCLUDED BY SUPPLIER IN QA DOCUMENTATION.

LEGEND TO BE USED: CLASS# : A = CRITICAL, B=MAJOR, C=MINOR; 'A' SHALL BE WITNESSED BY NTPC FQA, 'B' SHALL BE WITNESSED BY NTPC ERECTION / CONSTRUCTION DEPTT. AND 'C' SHALL BE WITNESSED BY MAIN SUPPLIER. (A & B SHALL BE NTPC CHP STAGE)

NTPC	SYSTEM EQUIPMENT: TRANSFORMERS UPTO 100 MVA, 132 kV CLASS SUB-SYSTEM:	STANDARD FIELD QUALITY PLAN CONFORMANCE TO: NTPC SPECIFICATION	QP No: 0000-999-QOE-T-001 REV No: 0 DATE: 01.11.2006 PAGE: 2 of 5 VALID UPTO: 31.10.2009	REVIEWED BY H Shekhar S D Singh O P Niranjan	APPROVED BY O K Shukla

Sl No	ACTIVITY AND OPERATION	CHARACTERISTICS	CLASS# OF CHECK	TYPE OF CHECK	QUANTUM OF CHECK	REFERENCE DOCUMENT	ACCEPTANCE NORMS	FORMAT OF RECORD	D*	REMARKS
1	2	3	4	5	6	7	8	9		10
1.13		Ensure horizontal storage & protection of oil drums from water	C	Visual	At the time of receipt & monthly	-do-	No leakage	-do-		Check for seal intactness & tampering
1.14		Marshalling box to be stored vertically in their respective cases.	C	Visual	At the time of storage	-do-	No physical damage			In case supplied loose.
2.00	**PRE-ERECTION**									
2.01		Check availability of relevant drgs., T&P, protocols etc.	C	Verify	Once before erection	Mfr's Erection & Maint. Manual	Available as per list	Logbook		
2.02		Check availability of proper tools and tackles including jacking pad for carrying out erection	C	Visual	-do-	-do-	-do-			
2.03		Where rollers are applicable, check that rollers are greased properly before assembly of transformer	C	Visual	100%	-do-	Free movement of rollers			
2.04		Check for pipe cleaning before erection	B	Visual	100%	-do-	No dust / Moisture ingress	-do-		Oil flushing to be done, if required
2.05		Check insulation resistance between core to earth -500 V meggar	B	Measure	Once before erection	-do-	IR>1 Mega Ohm			If core earthing is done outside the transformer tank.
2.06		Check general condition of core-coil assly. Including wedging of core through inspection covers	A	Visual	As Reqd.	-do-	No damage/distortion	-do-		Material Damage Report in case of damage / misalignment
2.07		Check oil parameters (as per specification) before & after filling in transformer.	B	Measure	As Reqd.	NTPC Specification	NTPC Specification	-do-		
2.08		Oil filling under vacuum (for N2 filled jobs)	B	Measure	As Reqd.	Mfr's Erection & Maint. Manual		-do-		
2.09		Oil filteration using filter machine	B	Testing	Before erection	NTPC Specification for oil parameters	NTPC Specification			Use new filters in filter machine and ensure M/c is moisture free
2.10		Check IR value between core & earth after oil filling -500v meggar	B	Measure	-do-	-do-	IR>1 Mega Ohm	-do-	√	If core earthing is done outside the transformer tank.

LEGEND: * RECORDS INDENTIFIED WITH "TICK" (√) SHALL BE ESSENTIALLY INCLUDED BY SUPPLIER IN QA DOCUMENTATION.

LEGEND TO BE USED: CLASS# : A = CRITICAL, B=MAJOR, C=MINOR; 'A' SHALL BE WITNESSED BY NTPC FQA, 'B' SHALL BE WITNESSED BY NTPC ERECTION / CONSTRUCTION DEPTT. AND 'C' SHALL BE WITNESSED BY MAIN SUPPLIER. (A & B SHALL BE NTPC CHP STAGE)

NTPC	SYSTEM EQUIPMENT: TRANSFORMERS UPTO 100 MVA, 132 kV CLASS SUB-SYSTEM:	STANDARD FIELD QUALITY PLAN CONFORMANCE TO: NTPC SPECIFICATION	QP No: 0000-999-QOE-T-001 REV No: 0 DATE: 01.11.2006 PAGE: 3 of 5 VALID UPTO: 31.10.2009	REVIEWED BY H Shekhar S D Singh O P Niranjan	APPROVED BY C K Khosla

Sl No	ACTIVITY AND OPERATION	CHARACTERISTICS	CLASS# OF CHECK	TYPE OF CHECK	QUANTUM OF CHECK	REFERENCE DOCUMENT	ACCEPTANCE NORMS	FORMAT OF RECORD		REMARKS
1	2	3	4	5	6	7	8	9	D*	
2.11		Check all bushings are free from damage and oil level upto the mark - Oil level gauge	C	Visual	-do-	-do-	Upto the mark	-do-		In case of condenser bushing.
2.12		Check all condenser bushings for IR value & capacitance / tan delta test at 10 kV - (2.5 kV megger)	A	Measure	100%	-do-	IR > 5000 M ohms tan delta < 0.007	Logbook	√	
2.13		Verify tan delta tap is set back to normal earthed position and record the same	A	Physical	100%			-do-		
2.14		Ensure new gaskets during final erection of turrets, bushings and piping	B	Physical	Once before erection	-do-				
3.00	**ERECTION**									
3.01		Foundation readiness as per layout drawing	B	Measure	100%	Drawing	As per drawing	Log book		
3.02		Proper erection & alignment of all accessories	B	Visual	Each Unit	Mfr's Erection & Maint. Manual	As per drawing			
3.03		Operational checks on fans, oil pumps prior to installation	C	Testing	Each Unit	Mfr's Erection & Maint. Manual	To operate smoothly	Log book		
3.04		Manually operate OLTC / OCTC to raise & lower all taps, before electrical operation	C	Manual	-do-	-do-	To operate smoothly	-do-		
3.05		Direction of rotation of fans & pumps	C	Visual	-do-	-do-	Rotation as per mark	-do-		
3.06		Lubrication of fans & pumps	C	Visual	Each Unit	-do-	No abnormal noise	-do-		As applicable
3.07		Check tightness of core earthing after IR measurement between core to earth	A	Physical	-do-	-do-	No looseness	-do-		If core earthing is done outside the transformer tank.
3.08		Check earthing connections between transformer tank & cover, radiator bank, tank & OLTC head, main tank.	B	Physical	-do-	-do-	To be tight	-do-		
3.09		Check continuity & IR value of internal wiring in marshalling box - 500 V megger	B	Test	-do-	-do-	IR>1 Mega Ohm	-do-		
3.10		Ferruling of cables at both ends for identification	C	Visual	-do-	-do-	As per drg	-do-		
3.11		Ratio of CT (for WTI)	B	Visual	-do-	Test report	Test report	-do-		

LEGEND: * RECORDS INDENTIFIED WITH "TICK" (√) SHALL BE ESSENTIALLY INCLUDED BY SUPPLIER IN QA DOCUMENTATION.

LEGEND TO BE USED: CLASS# ; A = CRITICAL, B=MAJOR, C=MINOR; 'A' SHALL BE WITNESSED BY NTPC FQA, 'B' SHALL BE WITNESSED BY NTPC ERECTION / CONSTRUCTION DEPTT AND 'C' SHALL BE WITNESSED BY MAIN SUPPLIER (A & B SHALL BE NTPC CHP STAGE)

NTPC	SYSTEM EQUIPMENT: TRANSFORMERS UPTO 100 MVA, 132 kV CLASS SUB-SYSTEM:	STANDARD FIELD QUALITY PLAN CONFORMANCE TO: NTPC SPECIFICATION	QP No: 0000-999-QOE-T-001 REV No: 0 DATE: 01.11.2006 PAGE: 4 of 5 VALID UPTO: 31.10.2009	REVIEWED BY: H Shekhar, S D Singh, O P Nigam	APPROVED BY: U R Khetta

Sl No	ACTIVITY AND OPERATION	CHARACTERISTICS	CLASS# OF CHECK	TYPE OF CHECK	QUANTUM OF CHECK	REFERENCE DOCUMENT	ACCEPTANCE NORMS	FORMAT OF RECORD		REMARKS
1	2	3	4	5	6	7	8	9	D*	
3.12		Oil filling under vacuum (for N2 filled jobs)	B	Measure	As Reqd.	Mfr's Erection & Maint. Manual		-do-		
3.13		Proper cleaning of transformer after erection & oil filteration	C	Visual	-do-	Mfr's Erection & Maint. Manual	No sweating of oil	-do-		
3.14		Neutral grounding arrangement	B	Visual	100%	Drawing		-do-		
3.15		Connection check for neutral formation & core, if applicable	B	Visual	100%	Mfr's Erection & Maint. Manual		-do-		
3.16		Insulation resistance measurement between following by 500V/1kV megger a) high voltage winding to earth b) low voltage winding to earth c) high voltage to low voltage windings	A	Test	100%	Mfr's Erection & Maint. Manual	Minimum IR value is (kV+1) M Ohms	Log book	√	
3.17		Polarity of CT's	B	Measure	100%	-do-		-do-		
3.18		Check readiness of alarm / trip of safety & protection equipment	C	Visual	-do-	-do-		-do-		
3.19		Check continuity between HV winding & neutral, while OLTC in operation	A	Visual	-do-	-do-	Continuity should not break, while OLTC in operation	-do-		
3.20		Check oil level in transformer - Oil level gauge	B	Visual	Each unit	-do-	Upto the mark	-do-		Fill processed oil in case oil is below the mark.
3.21		Test on oil samples taken from main tank top & bottom after 24 hours of oil settling for BDV, moisture content, etc.	A	Testing	Each Unit	Mfr's Erection & Maint. Manual / NTPC Specification	Mfr's Erection & Maint. Manual / NTPC Specification	-do-	√	
3.22		Oil leakage test at normal head plus 35 kN/sq m measured at the base of tank for 24 hrs - Pressure Gauge	B	Visual	Tank Assly.	-do-	No leakage	-do-		As per NTPC Specification
3.23		Check bushing connections at line ends	B	Visual	Each Unit	-do-	-do-	-do-		
3.24		Check IR values between bushing terminal & flange of bushings-1/2.5 kV megger	B	Measure	Once	-do-	IR>(kV+1)M ohms	-do-		

LEGEND: * RECORDS INDENTIFIED WITH "TICK" (√) SHALL BE ESSENTIALLY INCLUDED BY SUPPLIER IN QA DOCUMENTATION.

LEGEND TO BE USED: CLASS# : A = CRITICAL, B=MAJOR, C=MINOR; 'A' SHALL BE WITNESSED BY NTPC FQA. 'B' SHALL BE WITNESSED BY NTPC ERECTION / CONSTRUCTION DEPTT. AND 'C' SHALL BE WITNESSED BY MAIN SUPPLIER (A & B SHALL BE NTPC CHP STAGE)

NTPC	SYSTEM EQUIPMENT: TRANSFORMERS UPTO 100 MVA, 132 kV CLASS SUB-SYSTEM:	STANDARD FIELD QUALITY PLAN CONFORMANCE TO: NTPC SPECIFICATION	QP No: 0000-999-QOE-T-001 REV No: 0 DATE: 01.11.2006 PAGE: 5 of 5 VALID UPTO: 31.10.2009	REVIEWED BY: H Shekhar, S D Singh, O P Niranjan	APPROVED BY: U R Khosla

Sl No	ACTIVITY AND OPERATION	CHARACTERISTICS	CLASS# OF CHECK	TYPE OF CHECK	QUANTUM OF CHECK	REFERENCE DOCUMENT	ACCEPTANCE NORMS	FORMAT OF RECORD	D*	REMARKS
1	2	3	4	5	6	7	8	9	10	11
3.25		Functioning of oil pump from manual, local and remote controls.	B	Physical	100%	Schematic Drawing		-do-		
3.26		Sequential operation of cooling system on auto operation.	B	Physical	100%	Schematic Drawing		Log book		
3.27		Touch up painting to be carried out, wherever necessary.	C	Physical	Once before erection	-do-				
3.28		Check for tightness of joints and connections	B	Physical	100%	Mfr's Erection & Maint. Manual	Mfr's Erection & Maint. Manual	-do-		
3.29		Check the readiness of fire alarm system and fire protection system.	B	Test	100%			-do-		
3.30		Record of OLTC - multimeter/stopwatch a) motor current b) operating time c) control voltage	B	Measure	100%	Mfr's Erection & Maint. Manual	Instruction Manual	-do-		
3.31		Check the completeness of erection	A	Visual	100%	Mfr's Erection & Maint. Manual / Apprvd Drg	Mfr's Erection & Maint. Manual / Apprvd Drg	-do-		

LEGEND: * RECORDS INDENTIFIED WITH "TICK" (√) SHALL BE ESSENTIALLY INCLUDED BY SUPPLIER IN QA DOCUMENTATION.

LEGEND TO BE USED: CLASS# : A = CRITICAL, B=MAJOR, C=MINOR; 'A' SHALL BE WITNESSED BY NTPC FQA, 'B' SHALL BE WITNESSED BY NTPC ERECTION / CONSTRUCTION DEPTT. AND 'C' SHALL BE WITNESSED BY MAIN SUPPLIER (A & B SHALL BE NTPC CHP STAGE)

एनटीपीसी NTPC	SYSTEM EQUIPMENT: EARTHING SYSTEM SUB-SYSTEM :	STANDARD FIELD QUALITY PLAN CONFORMING TO CODE: IS 3043 & INDIAN ELECTRICITY RULES/ ACTS	QP NO.: 0000-999-QO – E - I-003 REV. NO.: 00 DATE : 26/03/08 PAGE 1 OF 3 VALID UPTO : 25/03/11	REVIEWED BY: I.J.SINGH VIKRAM TALWAR S.D.SINGH O.P.NIRANJAN	APPROVED BY U.R.KHOSLA U.R. KHOSLA उप महाप्रबंधक (एफएचएम) Dy. General Manager (FHM) एनटीपीसी लिमिटेड NTPC Limited A-8A, Sector-24, Noida-201 301 (U.P.)

SL. NO	ACTIVITY AND OPERATION	CHARACTERISTICS / INSTRUMENTS	CLASS# OF CHECK	TYPE OF CHECK	QUANTUM OF CHECK	REFERENCE DOCUMENT	ACCEPTANCE NORMS	FORMAT OF RECORD	D*	REMARKS
1.	2.	3.	4.	5.	6.	7.	8.	9.		10.
1.	RECIEPT AND STORAGE									
1.00	EARTHING MATERIAL	--	V	C	100%	DELIVERY CHALLAN/ NTPC SPECTS.	DELIVERY CHALLAN/ NTPC SPECTS.	REGIS TER		
1.01	PROPER STORAGE	CHECK FOR PROPER STORAGE STORAGE LEVEL " A"	V	C	100%	PROPER STACKING	PROPER STACKING			FREE FROM WATER LOGGING
2.	PRE ERECTION									
2.01	CHECK FOR DAMAGE TO THE MATERIAL	MECH	V	C	100%	FREE FROM DAMAGE/ RUST/ CORROSION	FREE FROM DAMAGE/ RUST/ CORROSION	Register		
2.02	EARTHING OF METALLIC FRAME OF ALL ELECTRICAL EUIPMENTS & STRUCTURES	--DO--	V	B	100%	NTPC TECH. SPECTS.	NTPC TECH. SPECTS.	--DO-		
2.03	EARTHING OF CRANE RAILS, TRACKS, METAL PIPES & CONDUITS	--DO--	V	B	100%	--DO--	--DO--	--DO-		
2.04	STEEL RCC COLUMNS, METTALIC STIAIRS ETC EARTHING	--DO--	V	B	100%	--DO--	--DO--	--DO--		
2.05	NEUTRAL POINT OF H T TRANSFORMER	--DO-	V	B	100%	NTPC TECH. SPECTS. & APPR. DRGS.	SHALL BE EARTHED THROUGH NG RESISTOR	--DO--		
2.06	APPLICATION OF PROTECTIVE PAINTING ON EQUIPMENT BOLTED CONNECTIONS	--DO--	V	B	100%	NTPC TECH. SPECTS.	PAINTING WITH ANTI CORROSIVE PAINT/ COUMPOUND	--DO--		
2.07	CONNECTIONS BETWEEN EQUIPMENT EARTHING LEADS & BETWEEN EARTHING CONDUCTOR SAHLL BE OF WELDED TYPE. CHECK WELDING SLAG HAS BEEN REMOVED BEFORE APPLICATION OF PROTECTIVE COATING.	MECH	V	C	100%	WELDS IS TO BE TREATED WITH RED LEAD COUMPOUND & BITUMEN COMPOUND	WELDS IS TO BE TREATED WITH RED LEAD COUMPOUND & BITUMEN COMPOUND	--DO--		USAGE OF PROPER WELDING ELECTRODE

LEGEND: * RECORDS, INDENTIFIED WITH "TICK" (√) SHALL BE ESSENTIALLY INCLUDED BY SUPPLIER IN QA DOCUMENTATION.
LEGEND TO BE USED: CLASS # : A = CRITICAL, B=MAJOR, C=MINOR; 'A' SHALL BE WITNESSED BY NTPC FQA, 'B' SHALL BE WITNESSED BY NTPC ERECTION / CONSTRUCTION DEPTT. AND 'C' SHALL BE WITNESSED BY MAIN SUPPLIER (A & B CHECK SHALL BE NTPC CHP STAGE)

एनटीपीसी NTPC	SYSTEM EQUIPMENT: EARTHING SYSTEM SUB-SYSTEM :	**STANDARD FIELD QUALITY PLAN** CONFORMING TO CODE: IS 3043 & INDIAN ELECTRICITY RULES/ ACTS	QP NO.: 0000-999-QO – E - 1-003 REV. NO.: 00 DATE : 26/03/08 PAGE 2 OF 3 VALID UPTO : 25/03/11	REVIEWED BY: I.J.SINGH VIKRAM TALWAR S.D.SINGH O.P.NIRANJAN	APPROVED BY U.R.KHOSLA

उमेश राज खोसला
उप महाप्रबंधक
Dy. General Manager
एनटीपीसी लिमिटेड, NTPC Limited
A-8A, Sector-24, Noida-201 301 (U.P.)

SL. NO	ACTIVITY AND OPERATION	CHARACTERISTICS / INSTRUMENTS	CLASS# OF CHECK	TYPE OF CHECK	QUANTUM OF CHECK	REFERENCE DOCUMENT	ACCEPTANCE NORMS	FORMAT OF RECORD	D*	REMARKS
1.	2.	3.	4.	5.	6.	7.	8.	9.	D*	10.
2.08	RESISTANCE OF JOINTS	ELEC	MEAS	B	100%	NOT MORE THAN THE RESISTANCE OF EQUIVALENT LENGTH OF CONDUCTOR	NOT MORE THAN THE RESISTANCE OF EQUIVALENT LENGTH OF CONDUCTOR	--DO--		
2.09	EARTHING CONDUCTORS BURIED, EMBEDDED	MECH	V	C	100%	NTPC LAY OUT DRGS. & NTPC TECH. SPECTS	NTPC LAY OUT DRGS. & NTPC TECH. SPECTS	--DO--		
2.10	EARTH PITS ARE PROPERLY PREPARED FOR ELCTRODES	MECH	V	B	100%	IS 3043/ NTPC TECH. SPECTS.	IS 3043/ NTPC TECH. SPECTS.	-DO--		
2.11	CLAMPING / SUPPORT OF EARTHING CONDUCTORS ALONG WALL, COLUMN ETC.	-DO--	V	C	100%	NTPC TECH. SPECTS.	ONE METER INCASE OF WELDING / 750MM IN CASE OF CLEAT SUPPORT	-DO--		
3.00										
3.01	CONTINUITY OF EARTH CONDUCTORS & EFFICIENCY OF ALL BONDS & JOINTS CHECKING	ELEC	MEGGER	A	100%	IS3043-1987	IS3043-1987	--DO-		
3.02	EARTH RESISTANCE OF TREATED EARTH PIT ONLY	ELEC	EARTHING RESISTANCE TESTER	A	100%	--DO--	-DO--	--DO-		

LEGEND: * RECORDS, INDENTIFIED WITH "TICK" (√) SHALL BE ESSENTIALLY INCLUDED BY SUPPLIER IN QA DOCUMENTATION.
LEGEND TO BE USED: CLASS # : A = CRITICAL, B=MAJOR, C=MINOR; 'A' SHALL BE WITNESSED BY NTPC FQA, **'B'** SHALL BE WITNESSED BY NTPC ERECTION / CONSTRUCTION DEPTT. AND **'C'** SHALL BE WITNESSED BY MAIN SUPPLIER (A & B CHECK SHALL BE NTPC CHP STAGE)

एनटीपीसी NTPC	SYSTEM EQUIPMENT: EARTHING SYSTEM SUB-SYSTEM :	**STANDARD FIELD QUALITY PLAN** CONFORMING TO CODE: IS 3043 & INDIAN ELECTRICITY RULES/ ACTS	QP NO.: 0000-999-QO – E - I-003 REV. NO.: 00 DATE : 26/03/08 PAGE 3 OF 3 VALID UPTO : 25/03/11	REVIEWED BY: I.J.SINGH VIKRAM TALWAR S.D.SINGH O.P.NIRANJAN	APPROVED BY U.R.KHOSLA उ.र. खोसला/U.R.KHOSLA उप महाप्रबन्धक (गुणवत्ता आश्वासन) Dy. General Manager (QA) एनटीपीसी लिमिटेड/NTPC Limited A-8A, Sector-24, Noida-201 301 (U.P.)

SL. NO	ACTIVITY AND OPERATION	CHARACTERISTICS / INSTRUMENTS	CLASS# OF CHECK	TYPE OF CHECK	QUANTUM OF CHECK	REFERENCE DOCUMENT	ACCEPTANCE NORMS	FORMATION OF RECORD		REMARKS
1.	2.	3.	4.	5.	6.	7.	8.	9.	D*	10.

LEGENDS USED FOR 'STORAGE LEVEL'	
STORAGE LEVEL "A"	OUTSIDE WITH NO PROTECTIVE COVER (OPEN SPACE /YARD ON RAISED SURFACE, PROPERLY STACKED AND FREE FROM WATER LOGGING AND LOADING / UNDUE WEIGHT)
STORAGE LEVEL "B"	OUTSIDE WITH PROTECTIVE COVER (OPEN SPACE /YARD ON RAISED SURFACE, PROPERLY STACKED AND FREE FROM WATER LOGGING AND LOADING / UNDUE WEIGHT, COVERED WITH PVC/TARPAULIN)
STORAGE LEVEL "C"	INDOOR SHELF ITEMS (STORED IN PUCCA SHED, IN STORE)
STORAGE LEVEL "D	INDOOR CLEAN CONDITIONS (STORED IN PUCCA SHED, IN STORE. THE STORAGE AREA SHALL BE DRY AND FREE FROM DUST AND THERE SHALL NOT BE ACID/ CHEMICALS IN VICINITY)
STORAGE LEVEL "E"	INDOOR TEMPERATURE AND HUMIDITY CONTROLLED – AIR CONDITIONED (STORED IN PUCCA SHED, IN STORE WITH CONTROLLED ATMOSPHERE)

LEGEND: * RECORDS, INDENTIFIED WITH "TICK" (√) SHALL BE ESSENTIALLY INCLUDED BY SUPPLIER IN QA DOCUMENTATION.
LEGEND TO BE USED: CLASS # : A = CRITICAL, B=MAJOR, C=MINOR; 'A' SHALL BE WITNESSED BY NTPC FQA, **'B'** SHALL BE WITNESSED BY NTPC ERECTION / CONSTRUCTION DEPTT. AND **'C'** SHALL BE WITNESSED BY MAIN SUPPLIER (A & B CHECK SHALL BE NTPC CHP STAGE)

	SYSTEM EQUIPMENT : STATION LIGHTING SUB-SYSTEM :	STANDARD FIELD QUALITY PLAN CONFORMING TO CODE:	QP NO.: 0000-999-QOE-I - 002 REV. NO.: 00 DATE : 26/03/08 PAGE 1 OF 8 VALID UPTO : 25/03/11	REVIEWED BY: I.J.SINGH V. TALWAR S.D. SINGH O.P. NIRANJAN	APPROVED BY U.R. KHOSLA

उमेश खोसला/U.R. KHOSLA
उप महाप्रबन्धक (गुणवत्ता आश्वासन)
Dy. General Manager (QA)
एनटीपीसी लिमिटेड/NTPC Limited
A-8A, Sector-24, Noida-201 301 (U.P.)

SL. NO	ACTIVITY AND OPERATION	CHARACTERISTICS / INSTRUMENTS	CLASS # OF CHECK	TYPE OF CHECK	QUANTUM OF CHECK	REFERENCE DOCUMENT	ACCEPTANCE NORMS	FORMAT OF RECORD	D*	REMARKS
1.	2.	3.	4.	5.	6.	7.	8.	9.		10.
1	**RECEIPT & STORAGE**									
1.1	RECEIVING INSPECTION (COMPLETENESS OF DOCUMENTS, TEST CERTIFICATES ETC.)	-	C	V	100%	CHP/ MDCC	CHP/MDCC	REGISTER		
1.2	CHECK FOR TYPE AND NOS. OF LIGHTING FIXTURE	-	C	V	100%	CHP/ MDCC	CHP/ MDCC	REGISTER		
1.3	VISUAL EXAMINATION A) CHECK FOR ANY DAMAGE IN TRANSIT B) THEFT/ LOSS	-	C	V	100%	--DO--	FREE FROM DAMAGE	REGISTER		REPORT DAMAGES/ THEFT/ TO NTPC
1.4	**STORAGE**									
1.41	LIGHTING FIXTURES	CHECK FOR PROPER STORING STORAGE LEVEL " D""	C	V	100%	NO DAMAGE	NO DAMAGE	REGISTER		
1.42	LIGHTING PANEL, SWITCH BOXES, RECEPTACLES AND JUNCTION BOXES	CHECK FOR PROPER STORING STORAGE LEVEL "D"	C	V	100%	NO DAMAGE	NO DAMAGE	REGISTER		
1.43	STREET LIGHTING POLES, FLOOD LIGHTING POLES, LIGHTING MASTS	CHECK FOR PROPER STORING STORAGE LEVEL "A"	C	V	100%	NO DAMAGE	NO DAMAGE	REGISTER		
1.44	GI CONDUIT	CHECK FOR PROPER STORING STORAGE LEVEL "A"	C	V	100%	NO DAMAGE	NO DAMAGE	REGISTER		

LEGEND: * RECORDS, INDENTIFIED WITH "TICK" (√) SHALL BE ESSENTIALLY INCLUDED BY SUPPLIER IN QA DOCUMENTATION.
LEGEND TO BE USED: CLASS # : A = CRITICAL, B=MAJOR, C=MINOR; 'A' SHALL BE WITNESSED BY NTPC FQA, **'B'** SHALL BE WITNESSED BY NTPC ERECTION / CONSTRUCTION DEPTT. AND **'C'** SHALL BE WITNESSED BY MAIN SUPPLIER (A & B CHECK SHALL BE NTPC CHP STAGE)

एनटीपीसी NTPC	SYSTEM EQUIPMENT : STATION LIGHTING SUB-SYSTEM :	STANDARD FIELD QUALITY PLAN CONFORMING TO CODE:	QP NO.: 0000-999-QOE-I - 002 REV. NO.: 00 DATE : 26/03/08 PAGE 2 OF 8 VALID UPTO : 25/03/11	REVIEWED BY: I.J.SINGH V. TALWAR S.D. SINGH O.P. NIRANJAN	APPROVED BY U.R. KHOSLA

SL. NO	ACTIVITY AND OPERATION	CHARACTERISTICS / INSTRUMENTS	CLASS # OF CHECK	TYPE OF CHECK	QUANTUM OF CHECK	REFERENCE DOCUMENT	ACCEPTANCE NORMS	FORMAT OF RECORD	REMARKS	
1.	2.	3.	4.	5.	6.	7.	8.	9.	D*	
1.45	**CEILING FANS & REGULATORS**	CHECK FOR PROPER STORING STORAGE LEVEL "C"	C	V	100%	NO DAMAGE	NO DAMAGE	REGISTER		
1.5	TRANSPORTAION TO ERECTION SITE	-	C	V	100%	MECHANISED SYSTEM	MECHANISED SYSTEM	--		
2.0	**PRE ERECTION**									
2.1	AVAILABILITY OF CATALOGUE /NTPC SPETS./ NTPC APPR. DRGS.	-	C	V	100%	----	---	-		
2.2	AVAILABILITY OF ALL MATERIALS FOR ERECTION AS PER LAY OUT DRGS.	-	C	V	100%	--	--	-		
2.3	CIVIL/ FOUNDATION READINESS OF STREET LIGHTING POLES, FLOOD LIGHTING POLES, LIGHTING MASTS/ PANEL FOUNDATION ETC.	-	C	V	100%	CIVIL & STRUCTURAL DRAWING	CIVIL & STRUCTURAL DRAWING	-		
2.4	STEEL FABRICATIONS AS PER SPECIFIC SITE REQUIREMENTS	--	C	V	100%	APPROVED LAY OUT DRAWING	APPROVED LAY OUT DRAWING	-		ALL STEEL FABRICATIONS SHALL BE PAINTED WITH TWO COATS OF METAL PRIMER FOLLOWEED BY TWO COATS OF ALUMINIUM PAINT
3.0	**ERECTION**									
3.1	MOUNTING OF LIGHTING FIXTURES	--	C	V	100%	APPD. LAY OUT DRGS.& MANUF. CATALOGUE & NTPC SPECTS.	APPD. LAY OUT DRGS.& MANUF. CATALOGUE & NTPC SPECTS.	CHECK LIST		10% "B" CHECK ONFIXTURES MOUNTING IN LINE WITH MANUF. CATALOGUE/ MOUNTING INSTRUCTION

उमेश राज खोसला/U.R. KHOSLA
उप महाप्रबंधक (गुणवत्ता आश्वासन)
Dy. General Manager (QA)
एनटीपीसी लिमिटेड/NTPC Limited
A-8A, Sector-24, Noida-201 301 (U.P.)

LEGEND: * RECORDS, INDENTIFIED WITH "TICK" (√) SHALL BE ESSENTIALLY INCLUDED BY SUPPLIER IN QA DOCUMENTATION.
LEGEND TO BE USED: CLASS # : A = CRITICAL, B=MAJOR, C=MINOR; 'A' SHALL BE WITNESSED BY NTPC FQA, **'B'** SHALL BE WITNESSED BY NTPC ERECTION / CONSTRUCTION DEPTT. AND **'C'** SHALL BE WITNESSED BY MAIN SUPPLIER (A & B CHECK SHALL BE NTPC CHP STAGE)

	SYSTEM EQUIPMENT : STATION LIGHTING SUB-SYSTEM :	STANDARD FIELD QUALITY PLAN CONFORMING TO CODE:	QP NO.: 0000-999-QOE-I - 002 REV. NO.: 00 DATE : 26/03/08 PAGE 3 OF 8 VALID UPTO : 25/03/11	REVIEWED BY: I.J.SINGH V. TALWAR S.D. SINGH O.P. NIRANJAN,	APPROVED BY U.R. KHOSLA

उमेश राज खोसला/U.R. KHOSLA
उप महाप्रबन्धक (गुणवत्ता आश्वासन)
Dy. General Manager (QA)
एनटीपीसी लिमिटेड/NTPC Limited
A-8A, Sector-24, Noida-201 301 (U.P.)

SL. NO	ACTIVITY AND OPERATION	CHARACTERISTICS / INSTRUMENTS	CLASS # OF CHECK	TYPE OF CHECK	QUANTUM OF CHECK	REFERENCE DOCUMENT	ACCEPTANCE NORMS	FORMAT OF RECORD	REMARKS	
1.	2.	3.	4.	5.	6.	7.	8.	9.	D*	10.
3.2	FIXING OF LIGHTING FIXTURES INSTALLED ON/ UNDER PLATFORMS IN BOILER AREA / TG PEDESTALS	-	C	V	100%	APPROVED LAY OUT DRAWING & NTPC SPECTS.	VIBRATAION DAMPERS/ RUBBER CUSHIONS TO MINIMISE VIBRATIONS	CHECK LIST		
3.3	FLOOD LIGHTS MOUNTING	--	C	V	100%	--DO--	FLOOD LIGHT SHALL BE PROVIDED TO TURNS THE FIXTURES BY ABOUT 5 DEGREES	--DO--		
3.4	LIGHTING FIXTURES ON FALSE CEILING	--	C	V	100%	-DO--	LIGHTING FIXTURES SHALL BE SUPPORTED SEPARATELY BY FALSE SEALING GRID OR ROOF OVER FALSE CEILING	--DO--		
3.5	EMERGENCY AC FIXTURES FROM NORMAL AC FIXTURES	--	C	V	100%	--DO--	RED PAINTED CIRCULAR MARK ONE CM DIA SHALL BE PROVIDED ON EMERGENCY FIXTURES	--DO--		
3.6	STEEL INSTALLATIONS ACCESSORIES	--	C	V	100%	--DO--	PAINTING WITH RED LEAD PRIMER FOLLOWED BY TWO COATS OF ALUMINUM PAINT/ ENAMEL PAINT	--DO--		

LEGEND: * RECORDS, INDENTIFIED WITH "TICK" (√) SHALL BE ESSENTIALLY INCLUDED BY SUPPLIER IN QA DOCUMENTATION.
LEGEND TO BE USED: CLASS # : A = CRITICAL, B=MAJOR, C=MINOR; 'A' SHALL BE WITNESSED BY NTPC FQA, **'B'** SHALL BE WITNESSED BY NTPC ERECTION / CONSTRUCTION DEPTT. AND **'C'** SHALL BE WITNESSED BY MAIN SUPPLIER (A & B CHECK SHALL BE NTPC CHP STAGE)

	SYSTEM EQUIPMENT : STATION LIGHTING SUB-SYSTEM :	STANDARD FIELD QUALITY PLAN CONFORMING TO CODE:	QP NO.: 0000-999-QOE-I - 002 REV. NO.: 00 DATE : 26/03/08 PAGE 4 OF 8 VALID UPTO : 25/03/11	REVIEWED BY: I.J.SINGH V. TALWAR S.D. SINGH O.P. NIRANJAN	APPROVED BY U.R. KHOSLA उमेश राज खोसला/U.R. KHOSLA उप महाप्रबन्धक (गुणवत्ता आश्वासन) Dy. General Manager (QA) एनटीपीसी लिमिटेड/NTPC Limited A-8A, Sector-24, Noida-201 301 (U.P.)

SL. NO	ACTIVITY AND OPERATION	CHARACTERISTICS / INSTRUMENTS	CLASS # OF CHECK	TYPE OF CHECK	QUANTUM OF CHECK	REFERENCE DOCUMENT	ACCEPTANCE NORMS	FORMAT OF RECORD		REMARKS
1.	2.	3.	4.	5.	6.	7.	8.	9.	D*	10.
3.7	LIGHTING PANEL, SWITCH BOXES, RECEPTACLES AND JUNCTION BOXES a) CHECK MOUNTING IS PROPER AND PROPERLY BOLTED b) CHECK EARTHING OF PANELS c) PROPER SIZE CABLE GLAND ARE USED FOR CABLING	--	B	V	100%	APPROVED LAY OUT DRAWING	APPROVED LAY OUT DRAWING/ NTPC TEC. SPECTS.	--DO--		1.IN OFFICE AREAS AND CONTROL ROOMS, SWITCH BOXES SHALL BE FLUSH MOUNTED IN WALL AND JUNCTION BOXES SHALL BE RECESS MOUNTED. 2. NO GAS CUTTING SHALL BE USED FOR DRILLING / PUNCHING.
3.8	CONDUITS									
3.8	CONDUITS SUPPORTING	--	C	V	100%	NTPC TECH. SPECTS.	USING METTALIC SADDLES CLAMP SECURED TO NYLON RAWL PLUGS WITH SCREWS TO THE BUILDING STEEL AT AN INTERVAL OF NOT MORE THAN ONE METER, BUT EITHER SIDE OF COUPLER S, OR BENDSOR SIMILAR FITTINGS.	--DO--		SADDLES/ CLAMPS SHALL BE FIXED AT A DISTANCE OF 30CM FROM THE CENTRE OF SUCH FITTINGS.
3.81	EPOXY COATED G.I. CONDUITS & ACCESSORIES IN BATTERY ROOM, WATER TREATMENT PLANT ETC.	--	B	V	100%	APPROVED LAY OUT DRAWING	APPROVED LAY OUT DRAWING	--DO--		
3.82	CONDUITS CLAMPING	--	C	V	100%					
3.83	EXPOSED/ EMBEDDED CONDUITS FIXING	--	C	V	100%	APPROVEDLAY OUT DRAWING	NTPC TECH. SPECTS.	--DO--		
3.84	SEALING OF CONDUITS	--	C	V	100%	CEMENT MORTAR / PUTTY/ GLASS WOOL SEALING AFTER PULLING OF CABLES	CEMENT MORTAR / PUTTY/ GLASS WOOL SEALING AFTER PULLING OF CABLES	--DO-		

LEGEND: * RECORDS, INDENTIFIED WITH "TICK" (√) SHALL BE ESSENTIALLY INCLUDED BY SUPPLIER IN QA DOCUMENTATION.
LEGEND TO BE USED: CLASS # : A = CRITICAL, B=MAJOR, C=MINOR; 'A' SHALL BE WITNESSED BY NTPC FQA, **'B'** SHALL BE WITNESSED BY NTPC ERECTION / CONSTRUCTION DEPTT. AND **'C'** SHALL BE WITNESSED BY MAIN SUPPLIER (A & B CHECK SHALL BE NTPC CHP STAGE)

	SYSTEM EQUIPMENT : STATION LIGHTING SUB-SYSTEM :	STANDARD FIELD QUALITY PLAN CONFORMING TO CODE:	QP NO.: 0000-999-QOE-T- 002 REV. NO.: 00 DATE : 26/03/08 PAGE 5 OF 8 VALID UPTO : 25/03/11	REVIEWED BY: I.J.SINGH V. TALWAR S.D. SINGH O.P. NIRANJAN	APPROVED BY U.R. KHOSLA

SL. NO	ACTIVITY AND OPERATION	CHARACTERISTICS / INSTRUMENTS	CLASS # OF CHECK	TYPE OF CHECK	QUANTUM OF CHECK	REFERENCE DOCUMENT	ACCEPTANCE NORMS	FORMAT OF RECORD	REMARKS	
1.	2.	3.	4.	5.	6.	7.	8.	9.	D*	10.
3.85	PULL OUT BOXES FOR LONG CONDUITS	--	C	V	100%	NTPC TECH. SPECTS	PULL OUT BOXES SHALL BE PROVIDED AT SUITABLE INTERVALS NOT EXCEEDING 6 MTRS	--DO--		1.PULL OUT BOXES NOT REQUIRED WHEREVER JUNCTION BOXES EXISTS 2. HEAT SHALL NOT BE APPLIED FOR BENDING CONDUITS
3.86	METAL CONDUITS EARTHING	--	C	V	100%	--DO--	SHALL BE CONTINIOUS AND THOROUGHLY GROUNDED	--DO--		
3.87	DESIGNATION OF CONDUITS	--	C	V	100%	APPROVED LAY OUT DRAWING/ NTPC TECH. SPECTS	SHALL BE BY MEANS OF PAINTING FOR EACH RUN OF CONDUITS AT EACH END. WHERE CONDUITS TERMINATE AT PANELS, SWITCH BOXES , JUNCTION BOXES, OR OTHER ENCLOSURE, THE DESIGNATION SHALL ALSO BE PAINTED ON THE INSIDE OF ENCLOSURE ADJACENT TO CONDUITS.	--DO--		

LEGEND: * RECORDS, INDENTIFIED WITH "TICK" (√) SHALL BE ESSENTIALLY INCLUDED BY SUPPLIER IN QA DOCUMENTATION.
LEGEND TO BE USED: CLASS # : A = CRITICAL, B=MAJOR, C=MINOR; 'A' SHALL BE WITNESSED BY NTPC FQA, **'B'** SHALL BE WITNESSED BY NTPC ERECTION / CONSTRUCTION DEPTT. AND **'C'** SHALL BE WITNESSED BY MAIN SUPPLIER (A & B CHECK SHALL BE NTPC CHP STAGE)

	SYSTEM EQUIPMENT : STATION LIGHTING SUB-SYSTEM :	STANDARD FIELD QUALITY PLAN CONFORMING TO CODE:	QP NO.: 0000-999-QOE-I - 002 REV. NO.: 00 DATE : 26/03/08 PAGE 6 OF 8 VALID UPTO : 25/03/11	REVIEWED BY: I.J.SINGH V. TALWAR S.D. SINGH O.P. NIRANJAN	APPROVED BY U.R. KHOSLA उमेश राज खोसला/U.R. KHOSLA उप महाप्रबन्धक (गुणवत्ता आश्वासन) Dy. General Manager (QA) एनटीपीसी लिमिटेड/NTPC Limited A-8A, Sector-24, Noida-201 301 (U.P.)

SL. NO	ACTIVITY AND OPERATION	CHARACTERISTICS / INSTRUMENTS	CLASS # OF CHECK	TYPE OF CHECK	QUANTUM OF CHECK	REFERENCE DOCUMENT	ACCEPTANCE NORMS	FORMAT OF RECORD	REMARKS	
1.	2.	3.	4.	5.	6.	7.	8.	9.	D*	10.
3.9	LIGHTING POLE/ MAST	--	C	V	100%	APPROVED LAY OUT DRAWING./ NTPC TECH. SPECTS	APPROVED LAY OUT DRAWING./ NTPC TECH. SPECTS	--DO--		1.NO CUTTING OR DRILLING IS PERMITTED ON GALVANIZED STRUCTURE 2. LIGHTING POLE SHALL BE PAINTED WITH TWO COATS OF ALUMINIUM PAINT AFTER COMPLETION OF INSTALLATION
3.9.1	WIRING									
3.9.2	LIGHTING FIXTURES	--	C	V	100%	APPROVED LAY OIUT DRAWING./ NTPC TECH. SPECTS	APPROVED LAY OUT DRAWING./ NTPC TECH. SPECTS	--DO--		1. IT SHALL BE GENERALLY GROUP CONTROLLED DIRECTLY FROM LIGHTING PANEL. 2. FOR OFFICE AREA IT SHALL BE FROM SWITCH BOXES
3.9.3	AC NORMAL, AC EMERGENCY& DC SYSTEM	--	B	V	100%	APPROVED LAY OUT DRAWING./ NTPC TECH. SPECTS	WIRING SHALL BE IN DIFFERENT CONDUITS FOR INDIVIDUALS SYSTEM	--DO--		
3.9.4	RECEPTACLES & LIGHTING CITCUIT a) USE PROPER DIE FOR CRIMPING b) CRIMPING TOOL TO BE CALLIBRATED	--	B	V	100%	APPROVED LAY OUT DRAWING./ NTPC TECH. SPECTS	SHALL BE FED FROM DIFFERENT CIRCUITS	--DO-		
3.9.5	LIGHTING WIRES CRIMPING a) PULL WIRES TO CHECK CRIMPING QUALITY	--	C	V	100%	--DO--	CRIMPING SHALL BE SOLDERLESS	-DO-		

LEGEND: * RECORDS, INDENTIFIED WITH "TICK" (√) SHALL BE ESSENTIALLY INCLUDED BY SUPPLIER IN QA DOCUMENTATION.
LEGEND TO BE USED: CLASS # : A = CRITICAL, B=MAJOR, C=MINOR; 'A' SHALL BE WITNESSED BY NTPC FQA, **'B'** SHALL BE WITNESSED BY NTPC ERECTION / CONSTRUCTION DEPTT. AND **'C'** SHALL BE WITNESSED BY MAIN SUPPLIER (A & B CHECK SHALL BE NTPC CHP STAGE)

	SYSTEM EQUIPMENT : STATION LIGHTING SUB-SYSTEM :	STANDARD FIELD QUALITY PLAN CONFORMING TO CODE:	QP NO.: 0000-999-QOE-I-002 REV. NO.: 00 DATE : 26/03/08 PAGE 7 OF 8 VALID UPTO : 25/03/11	REVIEWED BY: I.J.SINGH V. TALWAR S.D. SINGH O.P. NIRANJAN	APPROVED BY U.R. KHOSLA उमेश राज खोसला/U.R. KHOSLA उप महाप्रबंधक (गुणवत्ता आश्वासन) Dy. General Manager (QA) एनटीपीसी लिमिटेड/NTPC Limite A-8A, Sector-24, Noida-201 301 (U.P.)

SL. NO	ACTIVITY AND OPERATION	CHARACTERISTICS / INSTRUMENTS	CLASS # OF CHECK	TYPE OF CHECK	QUANTUM OF CHECK	REFERENCE DOCUMENT	ACCEPTANCE NORMS	FORMAT OF RECORD	REMARKS	
1.	2.	3.	4.	5.	6.	7.	8.	9.	D*	10.
3.9.6	CEILING FANS & REGULATORS	--	C	V	100%	--DO--	APPROVED LAY PUT DRAWING./ NTPC TECH. SPECTS	--DO--		
3.10	EARTHING OF LIGHTING SYSTEM									
3.10 1	LIGHTING PANELS ETC. EARTHING	--	B	V	100%	APPROVED LAY OUT DRAWING./ NTPC TECH. SPECTS	TWO SEPARATE & DISTINCT CONNECTIONS WITH EMPLOYER EARTHING	--DO--		
3.10 2	SWITCH BOXES, LIGHTING FIXTURES, JUNCTION BOXES, FANS & SINGLE PHASE RECEPTACLES ETC. EARTHING	--	B	V	100%	--DO--	SHALL BE EARTHED BY SEPARATE EARTH CONTINUITY CONDUCTOR	--DO--		
3.10 3	CABLES EARTHING	--	B	V	100%	--DO--	CABLE ARMOUR S SAHLL BE EARTHED AT BOTH ENDS TO EARTHING SYSTEM	--DO--		
3.10 4	EARTHING CONDUCTORS	-	B	V	100%	-DO--	APPROVED DRAWING./ NTPC TECH. SPECTS	--DO-		
3.10 5	APPLICATION OF PROTECTIVE PAINTING ON EQUIPMENT BOLTED CONNECTIONS	--	C	V	100%	--DO--.	PAINTING WITH ANTI CORROSIVE PAINT/ COUMPOUND	--DO--		
4.00	**ERECTION CHECK**									

LEGEND: * RECORDS, INDENTIFIED WITH "TICK" (√) SHALL BE ESSENTIALLY INCLUDED BY SUPPLIER IN QA DOCUMENTATION.
LEGEND TO BE USED: CLASS # : A = CRITICAL, B=MAJOR, C=MINOR; 'A' SHALL BE WITNESSED BY NTPC FQA, **'B'** SHALL BE WITNESSED BY NTPC ERECTION / CONSTRUCTION DEPTT. AND **'C'** SHALL BE WITNESSED BY MAIN SUPPLIER (A & B CHECK SHALL BE NTPC CHP STAGE)

	SYSTEM EQUIPMENT : STATION LIGHTING SUB-SYSTEM :	STANDARD FIELD QUALITY PLAN CONFORMING TO CODE:	QP NO.: 0000-999-QOE-I-002 REV. NO.: 00 DATE : 26/03/08 PAGE 8 OF 8 VALID UPTO : 25/03/11	REVIEWED BY: I.J.SINGH V. TALWAR S.D. SINGH O.P. NIRANJAN	APPROVED BY U.R. KHOSLA

उमेश राज
उप महाप्रबन्धक
एनटीपीसी लिमिटेड
A-8A, Sector-24, Noida-201 301 (U.P.)

SL. NO	ACTIVITY AND OPERATION	CHARACTERISTICS / INSTRUMENTS	CLASS # OF CHECK	TYPE OF CHECK	QUANTUM OF CHECK	REFERENCE DOCUMENT	ACCEPTANCE NORMS	FORMAT OF RECORD	REMARKS	
1.	2.	3.	4.	5.	6.	7.	8.	9.	D*	10.
4.01	IR CHECK ON FIXTURES / PANELS/ SWITCH BOXES/ RECEPTACLES AND CABLES / WIRES	ELECTR.	A	MEGGER	100%	SHOULD NOT SHOW ZERO VALUE	SHOULD NOT SHOW ZERO VALUE	CHECK LIST		
4.02	CHECK CONTINUITY OF EARTHING	--DO--	B	--	100%	CONTINUITY OF EARTH CONDUCTORS	CONTINUITY OF EARTH CONDUCTORS	--DO--		

LEGENDS USED FOR 'STORAGE LEVEL'	
STORAGE LEVEL "A"	OUTSIDE WITH NO PROTECTIVE COVER (OPEN SPACE /YARD ON RAISED SURFACE, PROPERLY STACKED AND FREE FROM WATER LOGGING AND LOADING / UNDUE WEIGHT)
STORAGE LEVEL "B"	OUTSIDE WITH PROTECTIVE COVER (OPEN SPACE /YARD ON RAISED SURFACE, PROPERLY STACKED AND FREE FROM WATER LOGGING AND LOADING / UNDUE WEIGHT, COVERED WITH PVC/TARPAULIN)
STORAGE LEVEL "C"	INDOOR SHELF ITEMS (STORED IN PUCCA SHED, IN STORE)
STORAGE LEVEL "D	INDOOR CLEAN CONDITIONS (STORED IN PUCCA SHED, IN STORE. THE STORAGE AREA SHALL BE DRY AND FREE FROM DUST AND THERE SHALL NOT BE ACID/ CHEMICALS IN VICINITY)
STORAGE LEVEL "E"	INDOOR TEMPERATURE AND HUMIDITY CONTROLLED – AIR CONDITIONED (STORED IN PUCCA SHED, IN STORE WITH CONTROLLED ATMOSPHERE)

LEGEND: * RECORDS, INDENTIFIED WITH "TICK" (√) SHALL BE ESSENTIALLY INCLUDED BY SUPPLIER IN QA DOCUMENTATION.
LEGEND TO BE USED: CLASS # : A = CRITICAL, B=MAJOR, C=MINOR; 'A' SHALL BE WITNESSED BY NTPC FQA, **'B'** SHALL BE WITNESSED BY NTPC ERECTION / CONSTRUCTION DEPTT. AND **'C'** SHALL BE WITNESSED BY MAIN SUPPLIER (A & B CHECK SHALL BE NTPC CHP STAGE)

एनटीपीसी NTPC	SYSTEM EQUIPMENT: POWER & CONTROL CABLES AND ACCESSARY UP TO 33KV SUB-SYSTEM :	STANDARD FIELD QUALITY PLAN CONFORMING TO CODE: IS1255-1983 AND NTPC TECHNICAL SPECIFICATION	QP NO.: 0000-999-QO E - I-004 REV. NO.: 00 DATE : 26/03/08 PAGE 1 OF 6 VALID UPTO : 25/03/11	REVIEWED BY: I.J.SINGH VIKRAM TALWAR S.D.SINGH O.P.NIRANJAN	APPROVED BY U.R.KHOSLA

उपमहाप्रबंधक (गुणवत्ता आश्वासन)
Dy. General Manager (QA)
एनटीपीसी लिमिटेड/NTPC Limited
A-8A, Sector-24, Noida-201 301 (U.P.)

SL. NO	ACTIVITY AND OPERATION	CHARACTERISTICS / INSTRUMENTS	CLASS# OF CHECK	TYPE OF CHECK	QUANTUM OF CHECK	REFERENCE DOCUMENT	ACCEPTANCE NORMS	REMARKS		
1.	2.	3.	4.	5.	6.	7.	8.	9	10	
1	**RECEIPT & STORAGE**									
1.1	RECEIVING INSPECTION A) COMPLETENESS OF DOCUMENTS B) CABLES ARE RECEIVED AS PER MDCC / CHP C) STRAIGHT THROUGTH JOINTS & TERMINATION KITS	---	C	V	100%	DELIVERY CHALLAN	MDCC/CHP PACKING LIST OF DRUMS	MAIN CONTRACTOR PERFORMA		
1.2	VISUAL EXAMINATION A) DAMAGE TO DRUMS B) THEFT	---	C	V	100%	DRUMS ARE NOT DAMAGED	DRUMS ARE NOT DAMAGED	--DO-		DAMAGE/ THEFT TO BE REPORTED TO NTPC
1.3	PROPER STORAGE	CHECK FOR PROPER STORAGE STORAGE LEVEL " B "	C	V	100%	IS 1255 CL.7.0	CABLES DRUMS ARE PLACED ON RAISED PLATFORM, HARD & WELL DRAINED SURFACE	--DO--		IN NO CASE DRUMS SHALL NOT BE STORED IN FLAT I.E WITH FLANGE HORIZONTAL
1.4	TRANSPORATION TO ERECTION SITE	--	C	V	100%	MECHNISED SYSTEM	MECHNISED SYSTEM ENSURE SAFETY OF DRUMS & PERSONNELS			
2.0	**ERECTION**									
2.01	FOR H T CABLE:- SIZE OF CABLE/ ROUTE LENGTH	V	B	V	100%	APROVED CABLES SCHEDULE	APROVED CABLES SCHEDULE	--DO--		CABLE LENTGH IS TO BE PLANNED IN SUCH A WAY SO THAT MIMNMUM STRAIGHT THROUGH JOINTS ARE MADE

LEGEND: * RECORDS, INDENTIFIED WITH "TICK" (√) SHALL BE ESSENTIALLY INCLUDED BY SUPPLIER IN QA DOCUMENTATION.
LEGEND TO BE USED: CLASS # : A = CRITICAL, B=MAJOR, C=MINOR; 'A' SHALL BE WITNESSED BY NTPC FQA, **'B'** SHALL BE WITNESSED BY NTPC ERECTION / CONSTRUCTION DEPTT. AND **'C'** SHALL BE WITNESSED BY MAIN SUPPLIER (A & B CHECK SHALL BE NTPC CHP STAGE)

	SYSTEM EQUIPMENT: POWER & CONTROL CABLES AND ACCESSARY UP TO 33KV SUB-SYSTEM :	STANDARD FIELD QUALITY PLAN CONFORMING TO CODE: IS1255-1983 AND NTPC TECHNICAL SPECIFICATION	QP NO.: 0000-999-QO E - I-004 REV. NO.: 00 DATE : 26/03/08 PAGE 2 OF 6 VALID UPTO : 25/03/11	REVIEWED BY: I.J.SINGH VIKRAM TALWAR S.D.SINGH O.P.NIRANJAN	APPROVED BY U.R.KHOSLA

SL. NO	ACTIVITY AND OPERATION	CHARACTERISTICS / INSTRUMENTS	CLASS# OF CHECK	TYPE OF CHECK	QUANTUM OF CHECK	REFERENCE DOCUMENT	ACCEPTANCE NORMS	FORMAT OF RECORD		REMARKS
1.	2.	3.	4.	5.	6.	7.	8.	9.	D	10.
2.02	FOR L T CABLE:- SIZE OF CABLE/ ROUTE LENGTH	V	C	V	100%	--DO-	--DO--	--DO--		--DO--
2.03	MARKING IDENTIFICATION ON CABLE DRUMS	--	C	V	100%	IS1554-I, IS7098-I & 2	SHOULD MATCH WITH PACKING LIST	CHECK LIST		
2.04	REMOVAL OF WOODEN PLANK FROM CABLE DRUMS	--	C	MECH	100%	USE PROPER TOOL	CABLES ARE NOT DAMAGED	--DO-		
2.05	CABLE DRUMS ARE KEPT ELEVATED FROM GROUND WITH THE HELP OF CABLE DRUMS JACKS	CABLE DRUMS JACK	C	MECH	100%	IS1255 CL.8.0	CABLES DRUMS ARE NOT TOUCHED ON GROUND	--DO--		
2.06	CABLES LENGTH UNWOUNDING / PULLING TENSION	MECH	C	MECH	100%	IS1255 CL.5.0	IS1255 CL.5.0	--DO--		CABLES SHOULD NOT DAMAGE
2.07	1.GROUND ROLLERS SHALL BE USED AT EVERY 2 METER INTERVAL. 2. CABLES SHALL NOT BE PULLED FROM END WITHOUT HAVING INTERMEDIATE PUSHING ARRANGEMENT.	GROUND ROLLERS	C	MECH	100%	IS1255, CL 10.0 & NTPC TECH. SPECTS.	IS1255 /CABLES ARE NOT DRAGGED ON HARD GROUND	--DO--		
2.08	IN EACH CABLE RUN SOME EXTRA LENGTH SHALL BE KEPT TO ENABLE ONE LT/ TWO HT STRAIGHT THROUGH JOINTS TO BE MADE	--	C	V	100%	NTPC TECH. SPECTS.	NTPC TECH. SPECTS.	--DO--		
2.09	SINGLE CORE CABLE/ MULTI CORE CABLE	--	C	V	100%	NTPC APROVED LAY OUT DRGS./ CABLES SCHEDULE/ NTPC TECH. SPECTS. – REFER CABLE INSTALLATION	SINGLE CORE CABLE IN TREFOIL FORMATION SHALL BE LAID WITH A DISTANCE OF FOUR TIMES THE DIAMETER OF CABLE BETWEEN TREFOIL CENTRE LINES AND CLAMPED AT EVERY TWO METRE. ALL MULTI CORE CABLES SHALL BE LAID IN TOUCHING FORMATION	--DO--		

LEGEND: * RECORDS, INDENTIFIED WITH "TICK" (√) SHALL BE ESSENTIALLY INCLUDED BY SUPPLIER IN QA DOCUMENTATION.
LEGEND TO BE USED: CLASS # : A = CRITICAL, B=MAJOR, C=MINOR; 'A' SHALL BE WITNESSED BY NTPC FQA, **'B'** SHALL BE WITNESSED BY NTPC ERECTION / CONSTRUCTION DEPTT. AND **'C'** SHALL BE WITNESSED BY MAIN SUPPLIER (A & B CHECK SHALL BE NTPC CHP STAGE)

एनटीपीसी NTPC	SYSTEM EQUIPMENT: POWER & CONTROL CABLES AND ACCESSARY UP TO 33KV SUB-SYSTEM :	STANDARD FIELD QUALITY PLAN CONFORMING TO CODE: IS1255-1983 AND NTPC TECHNICAL SPECIFICATION	QP NO.: 0000-999-QO E - I-004 REV. NO.: 00 DATE : 26/03/08 PAGE 3 OF 6 VALID UPTO : 25/03/11	REVIEWED BY: I.J.SINGH VIKRAM TALWAR S.D.SINGH O.P.NIRANJAN	APPROVED BY U.R.KHOSLA

SL. NO	ACTIVITY AND OPERATION	CHARACTERISTICS / INSTRUMENTS	CLASS# OF CHECK	TYPE OF CHECK	QUANTUM OF CHECK	REFERENCE DOCUMENT	ACCEPTANCE NORMS	FORMAT OF RECORD		REMARKS
1.	2.	3.	4.	5.	6.	7.	8.	9.	10.	
2..10	SECURING OF CABLES	--	C	V	100%	NTPC APROVED LAY OUT DRGS./ CABLES SCHEDULE/ NTPC TECH. SPECTS REFER CABLE INSTALLATION	POWER& CONTROL CABLES SAHLL BE SECURED FIXED TO TRAYS/ SUPPORT WITH SELF LOCKING TYPE NYLON CABLE TRAYS TYPE STRAPS WITH DE-INTERLINKING FACILITIES. FOR HORIZONTAL TYAPS ARRANGEMENTS, MULTI POWER CABLES & CONTROL CABLES SHALL BE SECURED AT EVERY FIVE METER INTERVAL. FOR VERTICAL TRAYS ARRANGEMENT IN INDIVIDUAL MULICORE POWER CABLES AND CONTROL CABLESSAHLL BE SECURED AT EVERY ONE METER BY NYLON CABLE STRAP.	--DO--		
2.11	CONTROL CABLES SECURING IN VERTICAL TRAYS	--	C	V	100%	--DO--	CONTROL CABLES SHALL BE BINDED TO TRAYS / SUPPORTS BY ALUMINUM STRIPS AT EVERY FIVE METER INTERVAL & AT EVERY BEND	--DO--		

उमेश राज खोसला/U.R. KHOSLA
उप महाप्रबंधक (गुणवत्ता आश्वासन)
Dy. General Manager (QA)
एनटीपीसी लिमिटेड/NTPC Limited
A-8A, Sector-24, Noida-201 301 (U.P.)

LEGEND: * RECORDS, INDENTIFIED WITH "TICK" (√) SHALL BE ESSENTIALLY INCLUDED BY SUPPLIER IN QA DOCUMENTATION.
LEGEND TO BE USED: CLASS # : A = CRITICAL, B=MAJOR, C=MINOR; 'A' SHALL BE WITNESSED BY NTPC FQA, **'B'** SHALL BE WITNESSED BY NTPC ERECTION / CONSTRUCTION DEPTT. AND **'C'** SHALL BE WITNESSED BY MAIN SUPPLIER (A & B CHECK SHALL BE NTPC CHP STAGE)

एनटीपीसी NTPC	SYSTEM EQUIPMENT: POWER & CONTROL CABLES AND ACCESSARY UP TO 33KV SUB-SYSTEM :	STANDARD FIELD QUALITY PLAN CONFORMING TO CODE: IS1255-1983 AND NTPC TECHNICAL SPECIFICATION	QP NO.: 0000-999-QO E - I-004 REV. NO.: 00 DATE : 26/03/08 PAGE 4 OF 6 VALID UPTO : 25/03/11	REVIEWED BY: I.J.SINGH VIKRAM TALWAR S.D.SINGH O.P.NIRANJAN	APPROVED BY U.R.KHOSLA

SL. NO	ACTIVITY AND OPERATION	CHARACTERISTICS / INSTRUMENTS	CLASS# OF CHECK	TYPE OF CHECK	QUANTUM OF CHECK	REFERENCE DOCUMENT	ACCEPTANCE NORMS	FORMAT OF RECORD	*	REMARKS
1.	2.	3.	4.	5.	6.	7.	8.	9.	10.	
2.12	PROTECTION OF CABLES ON ROAD CROSSING	MECH	C	V	100%	NTPC APROVED LAY OUT DRGS./ CABLES SCHEDULE/IS1255	NTPC APROVED LAY OUT DRGS./ CABLES SCHEDULE/IS1255	--DO--		
2..13	LAYING OF CONTROL CABLES AND POWER CABLES IN DIFFERENT LAYERS OF TRAYS	--DO--	C	V	100%	NTPC APROVED LAY OUT DRGS./ CABLES SCHEDULE/IS1255/ NTPC TECHNICAL SPECIFICATION REFER CABLE INSTALLATION	HT CABLES SHALL BE LAID ON TOP MOST TIER & CABLES OF SUBSEQUENT LOWER VOLTAGE GRADES ON LOWER TIERS OF TRAYS	--DO--		
2.14	IR CHECK OF CABLES	MEGGER	C	V	100%	SHOULD NOT SHOW ZERO VALUE	SHOULD NOT SHOW ZERO VALUE	--DO--		
2..15	EARTHING AND BONDING (METAL SHEATHING , METAL SCREENING AND ARMOUR OF CABLE SHOULD BE EARTHED AT BOTH ENDS.)	MECH	B	V	100%	NTPC APROVED LAY OUT DRGS./ CABLES SCHEDULE/ NTPC TECHNICAL SPECIFICATION REFER EARTHING SYSTEM INSTALLATION	METALLIC SHEATH/SCREENS, AND ARMOUR OF MULTI-CORE CABLES SHALL BE EARTHED AT BOTH ENDS. METALLIC SHEATH AND ARMOUR OF SINGLE CORE CABLES SHALL BE EARTHED AT SWITCHGEAR END ONLY OR AS PER APPD. CABLE SCHEDULE.	--DO-		
2.16	CABLE IDENTIFICATION TAG	V	C	V	100%	NTPC APROVED LAY OUT DRGS./ CABLES SCHEDULE/IS1255/ NTPC TECHNICAL SPECIFICATION REFER CABLE INSTALLATION	NTPC APROVED LAY OUT DRGS /CABLES SCHEDULE/IS1255/ NTPC TECHNICAL SPECIFICATION REFER CABLE INSTALLATION	--DO--		

उमेश राज खोसला/U.R. KHOSLA
उप महाप्रबन्धक (गुणवत्ता आश्वासन)
Dy. General Manager (QA)
एनटीपीसी लिमिटेड/NTPC Limited
A-8A, Sector-24, Noida-201 301 (U.P.)

LEGEND: * RECORDS, INDENTIFIED WITH "TICK" (√) SHALL BE ESSENTIALLY INCLUDED BY SUPPLIER IN QA DOCUMENTATION.
LEGEND TO BE USED: CLASS # : A = CRITICAL, B=MAJOR, C=MINOR; 'A' SHALL BE WITNESSED BY NTPC FQA, **'B'** SHALL BE WITNESSED BY NTPC ERECTION / CONSTRUCTION DEPTT. AND **'C'** SHALL BE WITNESSED BY MAIN SUPPLIER (A & B CHECK SHALL BE NTPC CHP STAGE)

	SYSTEM EQUIPMENT: POWER & CONTROL CABLES AND ACCESSARY UP TO 33KV SUB-SYSTEM :	STANDARD FIELD QUALITY PLAN CONFORMING TO CODE: IS1255-1983 AND NTPC TECHNICAL SPECIFICATION	QP NO.: 0000-999-QO E - I-004 REV. NO.: 00 DATE : 26/03/08 PAGE 5 OF 6 VALID UPTO : 25/03/11	REVIEWED BY: I.J.SINGH VIKRAM TALWAR S.D.SINGH O.P.NIRANJAN	APPROVED BY U.R.KHOSLA

SL. NO	ACTIVITY AND OPERATION	CHARACTERISTICS / INSTRUMENTS	CLASS# OF CHECK	TYPE OF CHECK	QUANTUM OF CHECK	REFERENCE DOCUMENT	ACCEPTANCE NORMS	FORMAT OF RECORD	*	REMARKS
1.	2.	3.	4.	5.	6.	7.	8.	9.	10.	11.
2.17	STRAIGHT THROUGTH JOINTS & TERMINATION									
2..18	LT STRAIGHT THROUGTH JOINTS & TERMINATION	V	C	V	100%	NTPC APROVED LAY OUT DRGS./ CABLES SCHEDULE/IS1255/ NTPC TECHNICAL SPECIFICATION / TERMINATION MANUFACTURER RECCOMENDATIONS	--DO-	--DO-		1.CABLE JOINTER SHALL BE QUALIFIED TO CARRY OUT SATISFACTORY CABLE JOINTING / TERMINATION 2.CONTRACTOR SHALL FURNISH FOR REVIEW DOCUMENTARY EVIDENCE / EXPERIENCE REPORTS OF THE JOINTERS TO BE DEPLOYED AT SITE.
2.19	HT STRAIGHT THROUGTH JOINTS & TERMINATION	V	B	V	100%	-DO--	-DO	--DO--		--DO--
2.20	G.I. CONDUITS EARTHING	MECH	C	V	100%	IS3043-1966/ NTPC SPECTS.	IS3043-1966 / NTPC SPECTS.	--DO--		
2.21	SEALING OF END OF CONDUITS AFTER CABLE LAYING	--DO—	C	V	100%	NTPC TECH.SPECTS.	ENDS OF CONDUITS /PIPES SHALL BE SEALED WITH GLASS WOOL/CEMENT MORTAR/ PUTTY	--DO-		
2.22	CLEANING OF CABLE TRENCH & COVER THE CABLE TRENCH WITH COVERS	--DO--	C	V	100%	NTPC TECH. SPECTS	REPLACE RCC/STEEL TRENCH COVERS AFTER INSTALLATION WORK	--DO--		

उमेश राज खोसला/U.R. KHOSLA
उप महाप्रबन्धक (गुणवत्ता आश्वासन)
Dy. General Manager (QA)
एनटीपीसी लिमिटेड/NTPC Limited
A-8A, Sector-24, Noida-201 301 (U.P.)

LEGEND: * RECORDS, INDENTIFIED WITH "TICK" (√) SHALL BE ESSENTIALLY INCLUDED BY SUPPLIER IN QA DOCUMENTATION.
LEGEND TO BE USED: CLASS # : A = CRITICAL, B=MAJOR, C=MINOR; 'A' SHALL BE WITNESSED BY NTPC FQA, **'B'** SHALL BE WITNESSED BY NTPC ERECTION / CONSTRUCTION DEPTT. AND **'C'** SHALL BE WITNESSED BY MAIN SUPPLIER (A & B CHECK SHALL BE NTPC CHP STAGE)

एनटीपीसी NTPC	SYSTEM EQUIPMENT: **POWER & CONTROL CABLES AND ACCESSARY UP TO 33KV** **SUB-SYSTEM :**	**STANDARD FIELD QUALITY PLAN** **CONFORMING TO CODE: IS1255-1983 AND NTPC TECHNICAL SPECIFICATION**	**QP NO.: 0000-999-QO E - I-004** **REV. NO.: 00** **DATE : 26/03/08** **PAGE 6 OF 6** **VALID UPTO : 25/03/11**	**REVIEWED BY:** **I.J.SINGH** **VIKRAM TALWAR** **S.D.SINGH** **O.P.NIRANJAN**	**APPROVED BY** **U.R.KHOSLA**

SL. NO	ACTIVITY AND OPERATION	CHARACTERISTICS / INSTRUMENTS	CLASS# OF CHECK	TYPE OF CHECK	QUANTUM OF CHECK	REFERENCE DOCUMENT	ACCEPTANCE NORMS	FORMAT OF RECORD		REMARKS
1.	2.	3.	4.	5.	6.	7.	8.	9.	10.	
2.23	LAYING OF SAND BRICKS/ SLABS FOR BURRIED CABLES	--DO--	C	V	100%	NTPC APROVED LAY OUT DRGS./ CABLES SCHEDULE/IS1255	NTPC APROVED LAY OUT DRGS./ CABLES SCHEDULE/IS1255	--DO--		1. POWER CBALE SHOULD NOT BE LAID ABOVE TELECOMMUNICATION CABLE. 2. CABLE PROTECTIVE COVER MAY BE MARKED BY " POWER CABLE"
3.1	**ERECTION TESTS**									
3.2	FOR LT CABLES									
3.3	IR TEST	MEGGER	B	MEAS	100%	IS1255	IS1255	-DO-		
3.4	DC HV TEST	HV TESTER	B	MEAS	100%	IS1255	IS1255	--DO--		
3.5	FOR HT CABLES									
3.6	IR BEFORE AND AFTER LAYING	MEGGER	A	MEAS	100%	IS1255	IS1255	-DO--		
3.7	DC HV TEST ON EACH CORE	MEGGER	A	MEAS	100%	IS1255	IS1255	--DO--		

उमेश राज खोसला/U.R. KHOSLA
उप महाप्रबन्धक (गुणवत्ता आश्वासन)
Dy. General Manager (QA)
एनटीपीसी लिमिटेड/NTPC Limited
A-8A, Sector-24, Noida-201 301 (U.P.)

LEGENDS USED FOR 'STORAGE LEVEL'	
STORAGE LEVEL "A"	OUTSIDE WITH NO PROTECTIVE COVER (OPEN SPACE /YARD ON RAISED SURFACE, PROPERLY STACKED AND FREE FROM WATER LOGGING AND LOADING / UNDUE WEIGHT)
STORAGE LEVEL "B"	OUTSIDE WITH PROTECTIVE COVER (OPEN SPACE /YARD ON RAISED SURFACE, PROPERLY STACKED AND FREE FROM WATER LOGGING AND LOADING / UNDUE WEIGHT, COVERED WITH PVC/TARPAULIN)
STORAGE LEVEL "C"	INDOOR SHELF ITEMS (STORED IN PUCCA SHED, IN STORE)
STORAGE LEVEL "D	INDOOR CLEAN CONDITIONS (STORED IN PUCCA SHED, IN STORE. THE STORAGE AREA SHALL BE DRY AND FREE FROM DUST AND THERE SHALL NOT BE ACID/ CHEMICALS IN VICINITY)
STORAGE LEVEL "E"	INDOOR TEMPERATURE AND HUMIDITY CONTROLLED – AIR CONDITIONED (STORED IN PUCCA SHED, IN STORE WITH CONTROLLED ATMOSPHERE)

LEGEND: * RECORDS, INDENTIFIED WITH "TICK" (√) SHALL BE ESSENTIALLY INCLUDED BY SUPPLIER IN QA DOCUMENTATION.
LEGEND TO BE USED: CLASS # : A = CRITICAL, B=MAJOR, C=MINOR; 'A' SHALL BE WITNESSED BY NTPC FQA, **'B'** SHALL BE WITNESSED BY NTPC ERECTION / CONSTRUCTION DEPTT. AND **'C'** SHALL BE WITNESSED BY MAIN SUPPLIER (A & B CHECK SHALL BE NTPC CHP STAGE)

NTPC	EQUIPMENT : LT SWITCHGEAR	STANDARD FIELD QUALITY PLAN CONFORMING TO CODE : IS 8623	QP NO. 0000-999-QOE- T-002 REV NO. 0 DATE : 26 -12-2006 PAGE 1 OF 4 Valid upto : 25 -12-2009	REVIEWED BY AM VT OPN SDS	APPROVED BY (T.R.KHOSLA) HOD (QA-SPL)

S No	Activity & Operation	Characteristics / Instrument	Class of Check #	Type of Check	Quantum of Check	Reference Document	Acceptance Norms	Format Of Records		Remarks
1	2	3	4	5	6	7	8	9	10	10
Note for quantum of check		For "A" and "B" type checks quantum of check defined under column # 6 is for NTPC only. However contractor will carry out 100% quantum of check against all activities and operations identified in the SFQP								
A	MATERIAL RECEIPT & UNLOADING									
	Visual Inspection	Check identification marking on cases & quantity	C	Visual	100%	Challan / Packing slip	Challan / Packing slip			
		Check physical / external damages to packing for breakage	C	Visual	100%					
		If packing found damaged then check physical / external damages to panels for breakage, distortion or dents, cracks , scratches / removal of paint and rusting etc	C	Visual	100%					
		Ensure availability & use of proper material handling equipment (fork lift or suitable crane)	B	Visual	At random	Manufacturer's Manual	Manufacturer's Manual			
		Check for slinging points or handling instructions marked on the packing for proper handling	B	Visual	At random	Manufacturer's Manual	Manufacturer's Manual			
	Report theft / damages during transit	Report missing cases / equipment during transit and damages to panels / equipment for insurance claims	B	Visual	100%	Challan/ Packing slip	Challan/ Packing slip			
B	STORAGE OF EQUIPMENT									
	Storage Area	Storage area should be preferably covered or elevated floor (not prone to flooding,), non-corrosive & ventilated, safe, secure, clean and preferably vermin proof	B	Visual	100%					
	Storage handling	Panels to be covered with polythene sheet	C	Visual	100%					
		Panels should preferably be stored on wooden batons for further transportation or handling	C	Visual	100%					
C	PRE-EREECTION CHECKS									
	Availability of Documents	Ensure the availability of NTPC approved layout drg., GA drg. , BOM etc.	C	Visual	100%					

S No	Activity & Operation	Characteristics / Instrument	Class of Check #	Type of Check	Quantum of Check	Reference Document	Acceptance Norms	Format Of Records		Remarks
1	2	3	4	5	6	7	8	9	*	10
	Civil works & structures	Check readiness of switchgear location i.e., cut-outs, embedments have been provided at required locations	C	Visual	100%	NTPC appd. Drgs	NTPC appd. Drgs			
		Check the civil construction and ensure that there is no hindrance for erection of Switchgear panels	C	Visual	100%	NTPC appd. Drgs	NTPC appd. Drgs			
		Check civil work dimensions i.e. of floors, various openings, beams, columns, wall etc. as per NTPC approved drg.	C	Measure	100%	NTPC appd. Drgs	NTPC appd. Drgs			
	Check transportation route	Panel transportation route suitability / clearance	C	Visual	100%					
	Tools and tackles	Ensure availability of Tools, Tackles, erection hardware	C	Visual	100%	Manufacturer's Manual	Manufacturer's Manual			
	Transport panels to location	Ensure availability & use of proper material handling equipment (fork lift or suitable crane)	B	Visual	At random	Manufacturer's Manual	Manufacturer's Manual			
		Check for slinging points or handling instructions marked on the packing for proper handling	B	Visual	At random	Manufacturer's Manual	Manufacturer's Manual			
D	ERECTION CHECKS									
	Unpacking of panels	Check completeness of supply / availability of items	C	Visual	100%					
	Visual inspection	Verify Name plate, Label, caution plate	C	Visual	100%					
		Check physical / external damages to panels / component / equipments for breakage, distortion or dents, cracks , scratches and removal of paint/ rusting etc	C	Visual	100%					
	Handling of panels	Preferably use fork lifts for placing the panels onto foundations or if panels are rolled on to foundation then retain base plank to avoid damage to base frame	B	Visual	At random	Manufacturer's Manual	Manufacturer's Manual			
	Location of panels	Check for mounting of each panel as per NTPC approved layout drg.	B	Visual	100%	NTPC Appd Drg	NTPC Appd Drg			
	Alignment check	Check alignment of panels and accuracy of placement use shims if required	C	Visual	100%	Manufacturer's Manual	Manufacturer's Manual			

S No	Activity & Operation	Characteristics / Instrument	Class of Check #	Type of Check	Quantum of Check	Reference Document	Acceptance Norms	Format Of Records		Remarks
1	2	3	4	5	6	7	8	9	0 *	10
		Check alignment of all operating handles for all switches and CBs	B	Visual	At random					
		Check alignment of all power & control draw out contacts	B	Visual	At random					
	Installation checks	Check that insulators and conductors are thoroughly cleaned with dry air or scrubbed & cleaned suitably as required	B	Visual	At random					
		Ensure that insulators are handled carefully	C	Visual	100%					
		Remove oxide film preferably with sand paper or fine wire brush from the joint surfaces and then clean with Carbon Tetrachloride (CCl_4) or equivalent liquid	B	Visual	At random	Manufacturer's Manual	Manufacturer's Manual			
		Check alignment of busbars	C	Visual	100%	NTPC Appd Drg	NTPC Appd Drg			
		Verify use of proper washers Belleville / star /spring type	C	Visual	100%					
		Check tightness of bolts of joints of main bus bars, auxiliary buses	B	Visual	At random	NTPC approved drgs.	NTPC approved drgs.			
		Check connectors & tightness of connection of busduct entry. If these connections are to be done later, then ensure that the enclosure ends are kept closed / covered preventing entry of dust, water etc.	B	Visual	At random	NTPC approved drgs.	NTPC approved drgs.			
		Check that inter panels earthing busbar is properly connected and board is connected to station earth	B	Visual	At random					
		Check CT secondary shorting links & remove them where required for connection to relays & meters	B	Visual	At random	NTPC approved drgs.	NTPC approved drgs.			
		Check for inter panel gaskets	C	Visual	100%					
		Check alignment of MCC doors and free movement as well as interchangeability of similar modules	B	Visual	At random					
		Check operating mechanism physically for any looseness of links etc	B	Visual	At random	Manufacturer's Manual	Manufacturer's Manual			

S No	Activity & Operation	Characteristics / Instrument	Class of Check #	Type of Check	Quantum of Check	Reference Document	Acceptance Norms	Format Of Records	D *	Remarks
1	2	3	4	5	6	7	8	9		10
		Check Degree of protection by paper insertion method at the gasketted joints for IP 5X sections	B	Visual	At random					
		Check caution / danger plate provided	C	Visual	100%					
	Continuity check	Check continuity of main & auxiliary circuits	A	Elec	100%	NTPC approved drgs.	NTPC approved drgs.			
	IR check	Perform IR of main & auxiliary circuits with 500 V Meggar	A	Elec	100%	IS 8623	IS 8623			
	Earthing	Check earthing with grid	A	Visual	100%	NTPC approved drgs.	NTPC approved drgs.			
	Cabling checks	Check for completeness of control cable terminations	B	Visual	At random	NTPC approved drgs.	NTPC approved drgs.			
		Check for completeness of power cable terminations	B	Visual	At random	NTPC approved drgs.	NTPC approved drgs.			
		Check for completeness of communication cable terminations, if applicable	B	Visual	At random	NTPC approved drgs.	NTPC approved drgs.			
		Do not earth shielding on communication cable in MCC	B	Visual	At random	NTPC approved drgs.	NTPC approved drgs.			
		Check control and power cables are properly secured or clamped	B	Visual	At random					
		Check tightness of control and power cable terminations	B	Visual	At random	Manufacturer's Manual	Manufacturer's Manual			
		Plug all unused holes and openings including those for cable entries	C	Visual	100%					
E	**FINAL VISUAL INSPECTION**	Check no loose tools or hardware or any other unwanted material etc are left inside the Panels	B	Visual	100%					
		Check for any damage to paint finish and ensure touch up.	B	Visual	100%					
		Check all switches and CBs are in OFF position	C	Visual	100%					
		Check completeness of installation of Switchgear panels	B	Visual	100%					

एनटीपीसी NTPC	ITEM : Instrumentation Cables. SUB SYSTEM : Shielded Instrument/ TC extension/ Compensating PVC FRLS Cable	**STANDARD QUALITY PLAN**	To be filled by NTPC QP No.: 0000-999-QOI-S-035 Revision:00 Date:05/09/2012 Page:1 OF 5 Valid up to : 04/09/2015
			Reviewed By: Archana Nath, Rajeev Garg, S.samanta
			Approved By: A.K.GARG Dt..... Approved

Sl No	Component & Operations	Characteristics	Class	Type of check	Quantum of check M	Quantum of check C,N	Reference Document	Acceptance Norms	Format of record	D*	Agency M	Agency C	Agency N	Remarks
1	2	3	4	5	6		7	8	9		10			11
I.	RAW MATERIAL													
A	CONDUCTOR													
A1	COPPER ROD For Conductor/ Drain wire	a) Dimension	Maj.	Measu.	1 sample/lot	_	IS 613/IS 12444	IS:613/IS:12444	IMR/ TC		V	-	-	Make - As per Annexure enclosed
		b) Conductivity/ Resistivity	Cri.	Elec.	1 sample/lot	1 sample/lot	IS:613/IS 12444	IS:613/IS:12444	IMR/ TC		V	V	-	
A2	Conductor for compensating cable	a) Size	Min	Dimen	1 Sample / lot	_	APPROVED DATASHEET	APPROVED DATA SHEET	IMR/ TC		P	-	-	Make - As per Annexure enclosed
		b) Resistance check	Maj	Elec	1 Sample / lot	_	APPROVED DATASHEET	APPROVED DATA SHEET	IMR/ TC		P	-	-	
		c) Thermo emf	Cri	Elec	1 Sample / lot	_	ANSI MC 96.1	ANSI MC 96.1	IMR/ TC		P	-	-	
		d) Specific resistance, Temp. cofficient	Maj	Elec/Mech	1 Sample / lot	1 Sample / lot	Mfr. catalog	Mfr. catalog	IMR/ TC		V	V	V	
		e) Chemical composition.	Maj	Chem.	1 Sample / lot	1 Sample / lot	Mfr. catalog	Mfr. catalog	IMR/ TC		V	V	V	
B	PVC COMPOUND													
B1	PVC Compound (Insulation & Sheath) Type of compound as per NTPC Spec.	a) Thermal stability (for Insulation)	Maj.	Therm	1 sample/lot	1 sample/lot	VDE 207 Part -4/5	VDE 207 Part -4/5	IMR/ TC		P	V	-	
		b) TS & % Elongation Before and After aging and variation.	Maj.	Mech.	1 sample/lot	1 sample/lot	VDE 207 Part -4/5	VDE 207 Part -4/5	IMR/ TC		P	V	-	
		c) Loss of Mass (Sheath)	Maj	Therm.	1 sample/lot	1 sample/lot	VDE 207 Part -4/5	VDE 207 Part -4/5	IMR/ TC		P	V	-	
B2	FR Properties for Filler Compound	a) Oxygen index	Cri.	Chem	1 sample/lot	1 sample/lot	29 %(min)ASTMD2863	29%(min)ASTMD2863	IMR/ TC		P	V	-	
		b) Temperature index deg. C	Cri.	Chem	1 sample/lot	1 sample/lot	250 deg. C(min) ASTMD2863	250 deg. C(min) ASTMD2863	IMR/ TC		P	V	-	
B3	FRLS Properties for Sheath	a) Oxygen index	Cri	Chem	1 sample/lot	1 sample/lot	ASTMD2863/ APPROVED DATASHEET	ASTMD2863/ APPROVED DATASHEET	IMR/ TC		P	V	-	
		b) Temperature index	Cri	Chem	1 sample/lot	1 sample/lot	ASTMD2863/ APPROVED DATASHEET	ASTMD2863/ APPROVED DATASHEET	IMR/ TC		P	V	-	
		c) Smoke density rating	Cri.	Chem	1 sample/lot	1 sample/lot	ASTMD2843/ APPROVED DATASHEET	ASTMD2843/ APPROVED DATASHEET	IMR/ TC		P	V	-	
		d) HCL Emission	Cri.	Chem	1 sample/lot	1 sample/lot	IEC754-1/ APPROVED DATASHEET	IEC754-1/ APPROVED DATASHEET	IMR/ TC		P	V	-	
C	Tapes / Binders (Aluminium Mylar,Melinex & Binders)	a) Thickness	Maj.	Mesu.	1 Sample/ Lot	1 Sample/ Lot	APPROVED DATASHEET	APPROVED DATASHEET	IMR/ TC		P	V	-	
		b) Size	Maj.	Mesu.	1 Sample/ Lot	1 Sample/ Lot	APPROVED DATASHEET	APPROVED DATASHEET	IMR/ TC		P	V	-	
D	Armour (If applicable)	a) Dimension	Maj.	Mesu.	1 Sample/ Lot	1 Sample/ Lot	APPROVED DATASHEET	APPROVED DATASHEET	IMR/ TC		P	V	-	
		b) TS & %Elongation	Maj.	Mech	1 Sample/ Lot	1 Sample/ Lot	IS 3975	IS 3975	IMR/ TC		P	V	-	
		c) Zn Coating	Maj.	Chem	1 Sample/ Lot	1 Sample/ Lot	IS 3975	IS 3975	IMR/ TC		P	V	-	
		d) Resistivity	Maj.	Elect	1 Sample/ Lot	1 Sample/ Lot	IS 3975	IS 3975	IMR/ TC		P	V	-	

LEGEND * RECORDS, IDENTIFIED WITH " TICK" SHALL BE ESSENTIALLY INCLUDED BY SUPPLIER IN QA DOCUMENTATION .M:MANUFACTURER/ SUB SUPPLIER C:MAIN SUPPLIER,N:NTPC, P:PERFORM ,W: WITNESS and V: VERIFICATION AS APPROPRIATE, "CHP" NTPC SHALL INDICATED IN COLOUM "N" AS "W"

एनटीपीसी NTPC	ITEM : Instrumentation Cables. SUB SYSTEM : Shielded Instrument/ TC extension/ Compensating PVC FRLS Cable	STANDARD QUALITY PLAN	To be filled by NTPC QP No.: 0000-999-QOI-S-035 Revision:00 Date:05/09/2012 Page:2 OF 5 Valid up to : 04/09/2015	Reviewed By: Archana Nair Rajeev Garg S Samanta	Approved By A.K. GARG

Sl No	Component & Operations	Characteristics	Class	Type of check	Quantum of check M	Quantum of check C,N	Reference Document	Acceptance Norms	Format of record	D*	Agency M	Agency C	Agency N	Remarks
1	2	3	4	5	6		7	8	9		10			11
E	Wooden Drums	a) Constructional checks	Maj	Visu.	100%	_	IS 10418	IS 10418	IMR/ TC		P	-	-	
		b) Dimensions	Maj	Mesu.	1 Sample/ Lot	_	IS 10418	IS 10418	IMR/ TC		P	-	-	
II	INPROCESS INSPECTION													
A	Wire Drawing & Annealing	a)Size	Maj.	Dimn.	1 Sample at Start and 1 Sample at End	_	Approved Datasheet	Approved Datasheet	IMR/ TC		P	-	-	
		b) Surface finish	Maj	Visu.	100%	_	Surface shall be smooth	Surface shall be smooth	IMR/ TC		P	-	-	
		c) % of Elongation	Maj	Mech.	1 Sample/ Lot	_	IS 8130	IS:8130	IMR/ TC		P	-	-	
B	Tinning (Only for Drawn wire)	a) Size	Maj	Dimn.	1 Sample/ Lot	_	NTPC Tech.Specification /Approved Datasheet	NTPC Tech.Specification /Approved Datasheet	IMR/ TC		P	-	-	
		b) Percentage of Elongation	Maj.	Mech.	1 Sample/ Lot	1 Sample/ Lot	NTPC Tech.Specification /Approved Datasheet	NTPC Tech.Specification /Approved Datasheet	IMR/ TC		P	V	V	
C	Bunching	a) Dimension and No. of strand.	Maj	Measu	1 Sample/ Lot	_	NTPC Tech.Specification /Approved Datasheet	NTPC Tech.Specification /Approved Datasheet	IMR/ TC		P			
		b)Resistance	Cri	Elec	1 Sample/ Lot	1 Sample/ Lot	NTPC Tech.Specification /Approved Datasheet	NTPC Tech.Specification /Approved Datasheet	IMR/ TC		P	V	V	
D	Insulation	a) Surface finish	Maj.	Visu.	100%	_	Surface shall be smooth & free from scratches	Surface shall be smooth & free from scratches	IMR/ TC		P	-	-	
		b) Core Diameter	Maj.	Measu.	1 Sample/ Lot	_	NTPC Tech.Specification /Approved Datasheet	NTPC Tech.Specification /Approved Datasheet	IMR/ TC		P	-	-	
		c) Radial Thickness(Min & Max.)	Maj.	Measu.	1 Sample/ Lot	_	NTPC Tech.Specification /Approved Datasheet	NTPC Tech.Specification /Approved Datasheet	IMR/ TC		P	-	-	No Repairs are allowed on the Insulated core
		d) Spark Test	Maj.	Elec.	100%	100%	IS 10810(With 3KV ac)	No Spark failure is allowed	IMR/ TC		P	V	V	
		e) Volume Resistivity/ Insulation Resistance	Maj.	Elec.	1 Sample/ Lot	1 Sample/ Lot	VDE -0207/ Approved Datasheet	VDE -0207/ Approved Datasheet	IMR/ TC		P	V	V	
		f) Colour, Marking/ Identification	Maj.	Visual	100%	100%	NTPC Tech.Specification /Approved Datasheet	NTPC Tech.Specification /Approved Datasheet	IMR/ TC		P	V	-	
		g) TS & %Elongation	Maj.	Mech	1 Sample/ Lot	_	VDE -0207/ Approved Datasheet	VDE -0207/ Approved Datasheet	IMR/ TC		P	-	-	
E	Twisting	a) Lay length and Direction	Maj	Measu. &	1 Sample at Start and 1 Sample at End	_	NTPC Tech.Specification /Approved Datasheet	NTPC Tech.Specification /Approved Datasheet	IMR/ TC		P	-	-	
		b) Size/ Dimension	Maj.	Measu.	1 Sample/ Lot	_	NTPC Tech.Specification /Approved Datasheet	NTPC Tech.Specification /Approved Datasheet	IMR/ TC		P	-	-	
		c) Pair Colour	Maj	Visual	100%	_	NTPC Tech.Specification /Approved Datasheet	NTPC Tech.Specification /Approved Datasheet	IMR/ TC		P	-	-	

LEGEND : * RECORDS, IDENTIFIED WITH " TICK" SHALL BE ESSENTIALLY INCLUDED BY SUPPLIER IN QA DOCUMENTATION M:MANUFACTURER/ SUB SUPPLIER C:MAIN SUPPLIER,N:NTPC, P:PERFORM ,W: WITNESS and V: VERIFICATION AS APPROPRIATE, "CHP" NTPC SHALL INDICATED IN COLOUM "N" AS "W"

एनटीपीसी NTPC	ITEM : Instrumentation Cables. SUB SYSTEM : Shielded Instrument/ TC extension/ Compensating PVC FRLS Cable	STANDARD QUALITY PLAN	To be filled by NTPC QP No.: 0000-999-QOI-S-035 Revision 00 Date:05/09/2012 Page:3 OF 5 Valid up to : 04/09/2015	Reviewed By: Archana Nath Rajeev Garg S.samanta	Approved By A.K GARG/Approved अनुमोदित

Sl No	Component & Operations	Characteristics	Class	Type of check	Quantum of check M	Quantum of check C,N	Reference Document	Acceptance Norms	Format of record	D*	Agency M	Agency C	Agency N	Remarks
1	2	3	4	5	6		7	8	9		10			11
F	Laying of Pairs/ Taping/ Shielding (Wherever Applicable)	a) Construction	Maj.	Visu.	100%	_	NTPC Tech.Specification /Approved Datasheet	NTPC Tech.Specification /Approved Datasheet	IMR/ TC		P	-	-	
		b) Dimension	Maj.	Measu.	1 Sample/ Lot	_	NTPC Tech.Specification /Approved Datasheet	NTPC Tech.Specification /Approved Datasheet	IMR/ TC		P	-	-	
		c) Coverage/ Overlap	Maj.	Measu.	1 Sample/ Lot	_	NTPC Tech.Specification /Approved Datasheet	NTPC Tech.Specification /Approved Datasheet	IMR/ TC		P	-	-	
		d) Continuity	Maj	Dimn	1 Sample/ Lot	_	NTPC Tech.Specification /Approved Datasheet	NTPC Tech.Specification /Approved Datasheet	IMR/ TC		P	-	-	
G	Sheathing (Inner - if applicable)	a) Surface Finish	Maj.	Visual	100%	_	Smooth, free from visual defects #	Smooth, free from visual defects#	IMR/ TC			-	-	# Porosity, Burnt particles, Pimples (Repairs are not allowed)
		b) Colour	Maj	Visual	100%	_	NTPC Tech.Specification /Approved Datasheet	NTPC Tech.Specification /Approved Datasheet	IMR/ TC		P	-	-	
		c) Diameter / Thickness	Maj.	Measu.	1 Sample/ Lot	_	NTPC Tech.Specification /Approved Datasheet	NTPC Tech.Specification /Approved Datasheet	IMR/ TC		P	-	-	
H	Armouring (If applicable)	a) Surface finish	Maj.	Visual	100%	_	Smooth, free from visual defects like rusting etc.	Smooth, free from visual defects like rusting etc.	IMR/ TC		P	-	-	
		b) Direction of Lay & Coverage	Maj	Visual	100%	_	Smooth, free from visual defects like rusting etc.	Smooth, free from visual defects like rusting etc.	IMR/ TC		P	-	-	Min coverage shall be 90 %. Gap should not be more than 1 wire/ Strip dimension.
		c) Size of Wire/ Strip	Maj.	Measu.	1 Sample/ Lot	_	NTPC Tech.Specification /Approved Datasheet	NTPC Tech.Specification /Approved Datasheet	IMR/ TC		P	-	-	
		d) Diameter over Armouring	Maj.	Measu	1 Sample/ Lot	_	NTPC Tech.Specification /Approved Datasheet	NTPC Tech.Specification /Approved Datasheet	IMR/ TC		P	-	-	
I	Sheathing (Outer)	a) Surface Finish	Maj.	Visual	100%	_	Smooth, free from visual defects#	Smooth, free from visual defects#	IMR/ TC		P	-	-	# Porosity, Burnt particles, Pimples (No Repairs are allowed)
		b) Colour/ Marking/ Embossing	Maj.	Visual	100%	_	NTPC Tech.Specification /Approved Datasheet	NTPC Tech.Specification /Approved Datasheet	IMR/ TC		P	-	-	
		c) Overall Diameter, Thickness	Maj.	Measu	1 Sample/ Lot	_	NTPC Tech.Specification /Approved Datasheet	NTPC Tech.Specification /Approved Datasheet	IMR/ TC		P	-	-	
		d) TS & %Elongation	Maj.	Mech.	1 Sample/ Lot	_	NTPC Tech.Specification /Approved Datasheet	NTPC Tech.Specification /Approved Datasheet	IMR/ TC		P	-	-	
III. FINAL INSPECTION														
A.	TYPE TEST	Type test as per agreement with NTPC Engg. Review of type test clearence from NTPC Engg. before final Inspection - **CHP**												
B.	ROUTINE TEST	a) Cond.resistance (Cable & Drain wire)	Cri.	Elec.	100%	100%	NTPC Tech.Specification /Approved Datasheet	NTPC Tech.Specification /Approved Datasheet	FIR		P	V	V	
		b) HV Test	Cri.	Elec.	100%	100%	NTPC Tech.Specification /Approved Datasheet	NTPC Tech.Specification /Approved Datasheet	FIR		P	V	V	

LEGEND : * RECORDS, IDENTIFIED WITH " TICK" SHALL BE ESSENTIALLY INCLUDED BY SUPPLIER IN QA DOCUMENTATION M:MANUFACTURER/ SUB SUPPLIER C MAIN SUPPLIER,N NTPC, P.PERFORM ,W: WITNESS and V: VERIFICATION AS APPROPRIATE, "CHP" NTPC SHALL INDICATED IN COLOUM "N" AS "W"

एनटीपीसी NTPC	ITEM : Instrumentation Cables. SUB SYSTEM : Shielded Instrument/ TC extension/ Compensating PVC FRLS Cable	STANDARD QUALITY PLAN	To be filled by NTPC QP No.: 0000-099-QOI-S-035 Revision:00 Date:05/09/2012 Page:4 OF 5 Valid up to : 04/09/2015	Reviewed By: Archana Nath, Rajeev Garg, S.samanta	Approved By A K GARG

Sl No	Component & Operations	Characteristics	Class	Type of check	Quantum of check M	Quantum of check C,N	Reference Document	Acceptance Norms	Format of record	D*	Agency M	Agency C	Agency N	Remarks
1	2	3	4	5	6		7	8	9		10			11
		c) IR Test (on drum length)	Cri	Elec.	100%	100%	NTPC Tech Specification /Approved Datasheet	NTPC Tech.Specification /Approved Datasheet	FIR	√	P	V	V	
		d) Drain wire continuity	Cri.	Elec.	100%	100%	NTPC Tech.Specification /Approved Datasheet	NTPC Tech.Specification /Approved Datasheet	FIR	√	P	V	V	
C.	ACCEPTANCE TEST	a) Cond.resistance (Cable & Drain wire)	Cri	Elec	Samples as per IS 1554/8784	Samples as per IS 1554/8784	NTPC Tech Specification /Approved Datasheet	NTPC Tech.Specification /Approved Datasheet	FIR	√	P	W	W	
		b) HV Test	Cri	Elec.	Samples as per IS 1554/8784	Samples as per IS 1554/8784	NTPC Tech.Specification /Approved Datasheet	NTPC Tech Specification /Approved Datasheet	FIR	√	P	W	W	
		c) IR Test	Cri.	Elec.	Samples as per IS 1554/8784	Samples as per IS 1554/8784	NTPC Tech Specification /Approved Datasheet	NTPC Tech.Specification /Approved Datasheet	FIR	√	P	W	W	
		d) Constructional Details & Dimensions												
		i) Constructional Details	Maj.	Visual	Samples as per IS 1554/8784	Samples as per IS 1554/8784	NTPC Tech.Specification /Approved Datasheet	NTPC Tech Specification /Approved Datasheet	FIR	√	P	W	W	
		ii) Shield Al-mylar thickness	Maj.	Measu.	Samples as per IS 1554/8784	Samples as per IS 1554/8784	NTPC Tech.Specification /Approved Datasheet	NTPC Tech Specification /Approved Datasheet	FIR	√	P	W	W	
		iii) Insulation thickness	Maj	Measu.	Samples as per IS 1554/8784	Samples as per IS 1554/8784	NTPC Tech Specification /Approved Datasheet	NTPC Tech Specification /Approved Datasheet	FIR	√	P	W	W	
		iv) Inner/ Outer sheath thickness (as applicable)	Maj	Measu.	Samples as per IS 1554/8784	Samples as per IS 1554/8784	NTPC Tech.Specification /Approved Datasheet	NTPC Tech.Specification /Approved Datasheet	FIR	√	P	W	W	before and after ageing for insulation
		v) Diameter over outer sheath	Maj	Measu.	Samples as per IS 1554/8784	Samples as per IS 1554/8784	NTPC Tech Specification /Approved Datasheet	NTPC Tech.Specification /Approved Datasheet	FIR	√	P	W	W	
		e) Outer sheath - Colour, Marking/ Embossing & End sealing.	Maj.	Visual	Samples as per IS 1554/8784	Samples as per IS 1554/8784	NTPC Tech.Specification /Approved Datasheet	NTPC Tech.Specification /Approved Datasheet	FIR	√	P	W	W	
		f) Length checking.	Maj	Measu.	1 No. of each size & type per Lot	1 No. of each size & type per Lot	NTPC Tech.Specification /Approved Datasheet	NTPC Tech Specification /Approved Datasheet	FIR	√	P	W	W	
		g) Core - Band marking/ Numbering, Colour.	Maj	Visual	1 No. of each size & type per Lot	1 No. of each size & type per Lot	NTPC Tech.Specification /Approved Datasheet	NTPC Tech Specification /Approved Datasheet	FIR	√	P	W	W	
		h) Overall Coverage/overlap of shield & Continuity of drain wire.	Maj.	Visual	1 No. of each size & type per Lot	1 No. of each size & type per Lot	NTPC Tech Specification /Approved Datasheet	NTPC Tech.Specification /Approved Datasheet	FIR	√	P	W	W	Continuity shall be checked as per Manufacturer practice.

LEGEND : * RECORDS, IDENTIFIED WITH " TICK" SHALL BE ESSENTIALLY INCLUDED BY SUPPLIER IN QA DOCUMENTATION M:MANUFACTURER/ SUB SUPPLIER C:MAIN SUPPLIER, N:NTPC, P:PERFORM ,W: WITNESS and V: VERIFICATION AS APPROPRIATE. "CHP" NTPC SHALL INDICATED IN COLOUM "N" AS "W"

एनटीपीसी NTPC		ITEM : Instrumentation Cables. SUB SYSTEM : Shielded Instrument/ TC extension/ Compensating PVC FRLS Cable	STANDARD QUALITY PLAN					To be filled by NTPC QP No.: 0000-999-QOI-S-035 Revision:00 Date:05/09/2012 Page:5 OF 5 Valid up to : 04/09/2015		Reviewed By Archana Nath Rajeev Garg S.samanta			Approved By A.K.GARG	
Sl No	Component & Operations	Characteristics	Class	Type of check	Quantum of check M	Quantum of check C,N	Reference Document	Acceptance Norms	Format of record	D*	Agency M	Agency C	Agency N	Remarks
1	2	3	4	5	6		7	8	9		10			11
		i) Thermal EMF test (For compensating cable only)	Maj.	Elec.	Sample as per IS 8784	Sample as per IS 8784	NTPC Tech.Specification /Approved Datasheet	NTPC Tech.Specification /Approved Datasheet	FIR	Y	P	W	W	
		j) Thermal Stability (Insulation & Sheath)	Maj.	Chem	1 No. of each size & type per Lot	1 No. of each size & type per Lot	Spec /ADS/IS:5831	Spec /ADS/IS:5831	FIR	Y	P	W	W	
		k) Visual & Surface Finish	Maj.	Visual	1 No. of each size & type per Lot	1 No of each size & type per Lot	Smooth, free from visual defects #	Smooth, free from visual defects #	FIR	Y	P	W	W	# Like Porosity, Burnt particles, Pimples
		l) Electrical Parameters (Mutual capacitance, Cross talk, Attenuation, Characteristic Impedence as applicable)	Maj.	Elec.	1 No. of each size & type per Lot	1 No. of each size & type per Lot	NTPC Tech.Specification /Approved Datasheet	NTPC Tech.Specification /Approved Datasheet	FIR	Y	P	W	W	
		m) Persulphate Test (For Drain wire)	Maj	Chem.	1 No. of each size & type per Lot	1 No. of each size & type per Lot	NTPC Tech.Specification /Approved Datasheet	NTPC Tech.Specification /Approved Datasheet	FIR	Y	P	W	W	
		n) Swidesh chimney test (overall cable)	Maj.	Chem	1 No./ Complete lot offered $	1 No./ Complete lot offered $	NTPC Tech.Specification /Approved Datasheet	NTPC Tech.Specification /Approved Datasheet	FIR	Y	P	W	W	$ Irrespective of size & type.
		o) FRLS Test for outer sheath for OI(Oxygen Index), TI(Temperature Index), SDR(Smoke Density Rating) & HCL Emission.	Maj	Chem	1 No./ Complete lot offered $	1 No./ Complete lot offered $	NTPC Tech.Specification /Approved Datasheet	NTPC Tech.Specification /Approved Datasheet	FIR	Y	P	W	W	
		p) TS & % Elongation test of Insualtion & Sheath (Before & After aging)	Maj	Mech	1 No./ Complete lot offered $	1 No / Complete lot offered $	NTPC Tech.Specification /Approved Datasheet	NTPC Tech.Specification /Approved Datasheet	FIR	Y	P	W	W	
		q) Volume Resistivity (At room and Elevated Temperature)	Maj.	Elec	1 No / Complete lot offered $	1 No / Complete lot offered $	NTPC Tech.Specification /Approved Datasheet	NTPC Tech.Specification /Approved Datasheet	FIR	Y	P	W	W	
		r) Armouring Dimension & Zn coating. (If applicable)	Maj	Measu.	1 No / Complete lot offered $	1 No / Complete lot offered $	NTPC Tech.Specification /Approved Datasheet	NTPC Tech.Specification /Approved Datasheet	FIR	Y	P	W	W	
D.	Packaing and Dispatch	Stencileing, completeness & Verification with packing list	Maj.	Visual.	100%	-	Mfg Practice	Mfg Practice			P	-	-	

NOTE 1 : Where witnessing and verification of records is done only by main contractor (Coloum "C"), NTPC inspection Engineer may do a survilience Verification/ Witnessing as per his discretion.

NOTE 2 : IMR : Inword Material Register, TC : Test Certificates, Mfg. : Manufacturer, FIR : Final Inspection Report.

NOTE 3: NTPC Inspection Enginner to check,approval date,revision no of reference documents at the time of Inspection.

LEGEND * RECORDS IDENTIFIED WITH " TICK" SHALL BE ESSENTIALLY INCLUDED BY SUPPLIER IN QA DOCUMENTATION .M:MANUFACTURER/ SUB SUPPLIER C:MAIN SUPPLIER,N:NTPC, P:PERFORM ,W: WITNESS and V: VERIFICATION AS APPROPRIATE, "CHP" NTPC SHALL INDICATED IN COLOUM "N" AS "W"

Format No. :QS-01-QAI-P-09/F1-R1

ACCEPTABLE MAKES

COPPER ROD

M/S HCL
M/S STERLITE
M/S BIRLA COPPER
M/S INDO GULF
M/S LG INTERNATIONAL
IMPORTED VENDORS (LONDON METAL EXCHANGE REGISTERED VENDORS ONLY)

THERMOCOUPLE WIRES

ISABELLA HAUTE-GERMANY
SANDVIK - (KANTHAL INDIA, HOSUR)
JLC ELECTROMATE-JAIPUR (FOR KX AND SNX)

PVC COMPOUND FOR INSULATION AND FRLS SHEATH

M/S SHRIRAM
M/S KUND KUND POLYMER
M/S KALPANA INDUSTRIES
M/S AIRCON PNEUMATICS PVT. LTD., BHIWADI
M/S BIHANI MANUFACTURING COMPANY, NEW DELHI
M/S LG CHEMICALS
M/S CORDS CABLES, BHIWADI
M/S UNIVERSAL POLYCHEM, DELHI
M/S DELTON CABLE-FARIDABAD
M/S SCJ PLASTICS, NEW DELHI
M/S PARAGON
M/S BHARAT PLASTICS (POLYCAB GROUP)

MASTER BATCH

M/S SHRIRAM
M/S SARAS POLYPRODUCTS, BHIWADI
M/S SCJ PLASTICS, NEW DELHI
M/S BHARAT PLASTICS (POLYCAB GROUP)

Quality Assurance
Approved
Dt.....
J.T.P.C., Kolkata

	ITEM: (MATERIAL, CLASS, GRADE, RATING, SIZE ETC.) GALVANISED FLEXIBLE CABLE TRAYS SUPPORT SYSTEM	STANDARD QUALITY PLAN CONFORMING TO CODE: Design as per NTPC Specification	QP NO. 0000-999-QOE-S-38 REV.:00 DATE : 01.09.04 PAGE 1 OF 2 VALID UPTO:31.08.07	REVIEWED BY S.D.SINGH O.P.NIRANJAN I.J.SINGH	APPROVED BY ANIL GUPTA

SL. NO.	COMPONENT & OPERATIONS	CHARACTERISTICS	CLASS	TYPE OF CHECK	QUANTUM OF CHECK		REFERENCE DOCUMENT	ACCEPTANCE NORMS	FORMAT OF RECORD		AGENCY			REMARKS
					M	C/N				D*	M	C	N	
1.	2.	3.	4.	5.	6.		7	8	9		**	10		11
	Flexible cable trays Support Structure	1. In Black Condition a) Weld Quality	Major	Visual	100%	Random	Manufacturer's Plant Std	Manufacturer's Plant Std	Inspection Report		P	V	V	o
		b) Burs	Major	Visual	Rando m	-	No Burs	No Burs	-do-		P		-	
2.	Finished Galvanized	2. After Galvanising												
		2.1 General physical inspection including Galvanizing Quality/Defects, Dicromating, White Rusting etc.	Major	Visual	100%	5 Sample/L ot	IS-2629-1985 IS-4759-1996	IS-2629-1985 IS-4759-1996	-do-		P	W	W	
		2.2 Dimensional Check & Thickness Check	Major	Measurem ent	-do-	-do-	NTPC/Main Supplier Approved Drg.	NTPC/Main Supplier Approved Drg.	-do-		P	W	W	
		2.3 Galvanizing Tests												
		a) Coating thickness measurement survey by Elcometer	Critical	Measurem ent	IS-4759-1996	-do-	IS-4759-1996 IS-3203-1982	IS-4759-1996 IS-3203-1982	-do-		P	W	W	
		b) Mass of zinc coating	Critical	Measurem ent	-do-	1 coupon sample of each thickness	IS-6745-1972 IS-4759-1996	IS-6745-1972 IS-4759-1996	-do-		P	W	W	
		c) Uniformity of zinc coating/dip test	Critical	Measurem ent	-do-	-do-	IS-2633-1986 IS-4759-1996	IS-2633-1986 IS-4759-1996	-do-		P	W	W	
		d) Adhesion Test	Critical	Visual	-do-	-do-	IS-2629-1985	IS-2629-1985	-do-		P	W	W	

LEGEND: RECORDS IDENTIFIED WITH "TICK" SHALL BE ESSENTIALLY INCLUDED BY THE CONTRACTOR IN QA DOCUMENTATION

M: MANUFACTURER/SUB-SUPPLIER, C: **Main Supplier: NTPC, N: NTPC. INDICATE "P" PERFORM "W" WITNESS AND "V" VERIFICATION AS APPROPRIATE

"CHP" BY NTPC SHALL BE IDENTIFIED IN COLUMN "N" AS "W"

एनटीपीसी NTPC	ITEM: (MATERIAL, CLASS, GRADE, RATING, SIZE ETC.)	STANDARD QUALITY PLAN CONFORMING TO CODE: Design as per NTPC Specification	QP NO. 0000-999-QOE-S-38 REV.:00 DATE : 01.09.04 PAGE 2 OF 2 VALID UPTO: 31.08.07	REVIEWED BY S.D.SINGH O.P.NIRANJAN I.J.SINGH	APPROVED BY ANIL GUPTA QUALITY ASSURANCE APPROVED NTPC, New Delhi

SL. NO.	COMPONENT & OPERATIONS	CHARACTERISTICS	CLASS	TYPE OF CHECK	QUANTUM OF CHECK		REFERENCE DOCUMENT	ACCEPTANCE NORMS	FORMAT OF RECORD		AGENCY		
					M	C/N					M	C	N
1.	2.	3.	4.	5.	6.		7	8	9	D*	**	10	
		Proof Load Test as per note 6 Followed by Die Penetration Test (For 600 mm and above cable tray support system)	A	Meas/Visual	One Sample from each offered lot	One Sample from each offered lot	NTPC Technical Specification/ No visible cracks should develop on the weld part	NTPC Technical Specification/ No visible cracks should develop on the weld part	Inspection Report		P	W	W

Note :

1. The supplier to ensure procurement of steel from main producers like SAIL/TISCO, Rastriya Ispat/Ispat Ind. Jindal/Esser/Lloyds/IIS Co. and Zinc from Hindustan Zinc Ltd.
2. Welding shall be done by qualified welders as per supplier system.
3. Material shall be galvanized at NTPC approved sources only.
4. Pre-treatment of cable trays support system shall be carried out in seven tank process as per IS-2629. All the process parameters e.g. Concentration, temperature, density etc. to be maintained and recorded by the galvaniser.
5. The process of pre-treatment shall be verified by NTPC on surveillance basis during inspection of Galvanised Flexible Cable Trays support system.
6. (i) Test on Main support Channel shall be done if only CI channel are in scope of supply and cantilever arms shall be fitted on one side. This test shall be same as test 4 of type test as per tech. Spec.

   (ii) Test on Main Support Channel shall be done with C2 Channel and cantilever arms fitted on both sides, if C2 channels are in scope of supply. This test shall be same as test 2 A of type tests. Then test at (i) above shall not be repeated.

   (iii) Nut slip characteristic test (It shall support minimum load of 350 Kg. Before Nut Slips with bolt torque of 65 NM). This test shall be same as test 5 B of type tests.

   (iv) The procedure for carrying out above test shall be as per details given in Type Tests Specification.

LEGEND: RECORDS IDENTIFIED WITH "TICK" SHALL BE ESSENTIALLY INCLUDED BY THE CONTRACTOR IN QA DOCUMENTATION
M: MANUFACTURER/SUB-SUPPLIER, C: **Main Supplier, N: NTPC. INDICATE "P" PERFORM "W" WITNESS AND "V" VERIFICATION AS APPROPRIATE
"CHP" BY NTPC SHALL BE IDENTIFIED IN COLUMN "N" AS "W"

	ITEM:(MATERIAL,CLASS,GRADE,RATING, SIZE ETC.) GALVANIZED CABLE TRAYS (Perforated & Ladder type) & ACCESSORIES	STANDARD QUALITY PLAN CONFORMING TO CODE :	QP NO. 0000-999-[illegible]E-S-021 REV.: 1 DATE: 06.02.04 PAGE : 1 OF 1 VALID UPTO :05.02.07	REVIEWED BY A.K. Sharma Rana Vohra O.P. Niranjan	APPROVED BY ANIL GUPTA

SL. NO.	COMPONENT & OPERATIONS	CHARACTERSTICS	CLASS	TYPE OF CHECK	QUANTUM OF CHECK M	QUANTUM OF CHECK C/N	REFERENCE DOCUMENT	ACCEPTANCE NORMS	FORMAT OF RECORD	D*	AGENCY M**	AGENCY C	AGENCY N	REMARKS
1	2	3	4	5	6		7	8	9		10			11
	FINISHED CABLE TRAYS & ACCESSORIES	1 **In Black Condition**											-	**A)The cable trays shall be galvanised at NTPC approved sources only.**
		a) Weld Quality	Major	Visual	100%	Random	Manufacturer's Plant Std	Manufacturer's Plant Std	Inspection report		P		-	
		b) Burs	Major	Visual	Random		-	No Burs	-do-		P		-	**B) The supplier to ensure procurement of steel from main producers like SAIL/TISCO,Rastriya Ispat/Ispat Ind. Jindal/Esser/Lloyds/IIS Co. and Zinc from Hindustan Zinc Ltd.**
		2 **After Galvanising**												
		2.1 General Physical inspection including Galvanising Quality/ Defects, Dicromating, White rusting etc.	Major	Visual	IS-4759 -1996	5 sample/lot	IS-2629-1985 IS-4759-1996	IS-2629-1985 IS-4759-1996	-do-		P	W	W	**C)Welding shall be done by qualified welders as per supplier system**
		2.2 Dimensional check & Sheet Thickness	Major	Measurement	-do-	-do-	NTPC/Main Supplier Approved Drawing	NTPC/Main Supplier Approved Drawing	-do-		P	W	W	**D)Pre-tretment of fabricated cable trays shall be carried out in seven tank process as per IS 2629.All the process parameters e.g. Concentration, temperature, density etc. to be maintained and recorded by the Galvaniser**
		2.3 Galvanising tests												
		a) Coating thickness measurement survey by Elcometer	Critical	Measurement	-do-	-do-	IS-4759-1996 IS-3203-1982	IS-4759-1996 Table-I	-do-		P	W	W	
		b) Mass of zinc coating	Critical	Measurment	-do-	1 coupon sample of each thickness	IS-6745-1972 IS-2633-1986	IS-4759-1996 Table - I	-do-		P	W	W	**E)The process of pretreatment shall be varified by NTPC on surveillance basis during Inspection of cable trays**
		c) Uniformity of zinc coating/dip test	Critical	Measurment	-do-	-do- -do-	IS-2629-1985 IS-2633-1986 IS-4759-1996	IS-4759-1996 cl. 9.3	-do-		P	W	W	
		d) Adhesion test	Critical	Visual	-do-	-do-	IS-2629-1985	IS-2629-1985	-do-		P	W	W	***F* One piece each of 2.5 meter length size of cable tray of 300 mm & above shall be taken as sample from each offered lot for inspection. It shall be supported at both ends & loaded with uniformly distributed load of 76kg/ meter along the length of cable tray. The maximum deflection at mid span of each sample shall not exceed 7mm.**
		2.4 Deflection Test	Critical	Measurement	1 sample from each size type/ lot	1 sample from each size type/ lot	*F*	*F*	-do-		P	W	W	

LEGEND: RECORDS IDENTIFIED IDENTIFIED WITH **"TICK"** SHALL BE ESSENTIALLY INCLUDED BY THE CONTRACTOR IN QA DOCUMENTATION

** M: MANUFACTURER/SUB-SUPPLIER, C:CONTRACTOR/NOMINATED INSPECTION AGENCY. N: NTPC. INDICATE **"P"** PERFORM **"W"** WITNESS AND **"V"** VERIFICATION AS APPROPRIATE

"CHP" BY NTPC SHALL BE IDENTIFIED IN COLUMN **"N"** AS **"W"**.

	Item: 1.1 KV PVC Insulated FRLS Control cables	STANDARD QUALITY PLAN (CONFORMING TO CODE: IS 1554 PART 1 AND NTPC TECHNICAL SPECIFICATION)	QP. NO. 0000-999- QOE- S-040 REV-00 DATE : 25-11-11 Page 1 of 9 VALID UP TO: 24-11-14	REVIEWED BY INDERJIT SINGH VIKRAM TALWAR RAJEEV GARG	APPROVED BY A.K Garg

Sl. No	Component & Operations	Characteristics	Class	Type of check	Quantum of check M	Quantum of check C/N	Reference Document	Acceptance Norms	Record Format	Agency D*	Agency M	Agency C	Agency N	Remarks
1	2	3	4	5	6		7	8	9		10			11
Instructions: 1) Cable manufacturer to maintain records to show co- relation of raw materials to finished cables i,e raw material batch/ lot no. should be traceable to the cable drum. 2) Cable manufacturer to maintain all quality control records identified as per all QP stages enumerated below whether it is identified for NTPC verification or witness or not.														
A	Raw material/ Brought out Items													
1.01	Copper	1.Make	MA	Verify	100%	--	MANUFACTURER APPROVED SOURCES	MANUFACTURER APPROVED SOURCES	QCR		V	--	--	
		2. Resistivity	MA	Elect	As per cable Mnfr Std	--	IS 613	IS 613	-do--		P	--	--	
1.02	PVC compound for insulation	1. Make	MA	Verify	--do--	100%	MANUFACTURER APPROVED SOURCES	MANUFACTURER APPROVED SOURCES	--do--		V	V	--	
		2. Type/ Grade	MA	Verify	100%	100%	NTPC ADS	NTPC ADS	-do--		V	V	V	
		3. All acceptance test as per manufacturer norms including Thermal Stability test	MA	Verify	As per manufacturer norms	As per manufacturer norms	--do--	--do--	--do--		V	V	V	Refer note 1
1.03	PVC Compound for inner sheath	1. Make	MA	Verify	--do--	--do--	MANUFACTURER APPROVED sources	MANUFACTURER APPROVED sources	--do--		V	V	V	
		2. Type/ Grade	MA	Verify	--do--	--do--	NTPC ADS	NTPC ADS	--do--		V	V	V	
1.04	Steel wire / Formed Wire (As applicable)	1. Make	MA	Verify	--do--	--do--	MANUFACTURER APPROVED sources	MANUFACTURER APPROVED sources	--do--		V	V	V	
		2. Dimension	MA	Meas	1 sample from each size / lot	--	NTPC APPROVED DATA SHEET & IS 3975	NTPC APPROVED DATA SHEET & IS 3975	--do--		P	--	--	
		3. All acceptance tests as per IS 3975	MA	Verify	As per IS 3975	--	IS 3975	IS 3975	Supplier TC		V	V	--	
1.05	PVC compound for Sheath	1. Make	MA	Verfy	As per manufacturer norms	100%	MANUFACTURER APPROVED sources	MANUFACTURER APPROVED sources	QCR		V	V	--	
		2. Type / Grade	MA	Verify	100%	100%	NTPC ADS	NTPC ADS	--do--		V	V	V	
		3. All acceptance test as per manufacturer norms	MA	Verify	As per manufacturer norms	As per manufacturer norms	--do--	--do--	--do--		V	V	V	Refer note 1
		4. Thermal Stability	MA	Chem	One sample / Batch	--	NTPC ADS	NTPC ADS	QCR		P	--	--	
		5. Oxygen Index	MA	Chem	--do--	--	NTPC ADS/ IS 10810 Part 58	NTPC ADS	--do--		P	--	--	

LEGEND:- *RECORDS, IDENTIFIED WITH "TICK" UNDER COLUMN "D" SHALL BE ESSENTIALLY INCLUDED BY SUPPLIER IN QA DOCUMENTATION.
-M:MANUFACTURER/SUPPLIER, C:MAIN SUPPLIER, N:NTPC, P:PERFORM W:WITNESS,V:VERFICATION AS APPROPRIATE, CHP: NTPC SHALL IDENTIFY IN COLUMN "N" AS "W"

NTPC	Item: 1.1 KV PVC Insulated FRLS Control cables	STANDARD QUALITY PLAN (CONFORMING TO CODE: IS 1554 PART I AND NTPC TECHNICAL SPECIFICATION)	QP. NO. 0000-999- QOE- S-040 REV-00 DATE 25-11-11 Page 2 of 9 VALID UP TO: 24-11-14	REVIEWED BY INDERJIT SINGH VIKRAM TALWAR RAJEEV GARG	APPROVED BY A.K. Garg

Sl. No	Component & Operations	Characteristics	Class	Type of check	Quantum of check M	Quantum of check C/N	Reference Document	Acceptance Norms	Record Format	Agency D*	Agency M	Agency C	Agency N	Remarks
1	2	3	4	5	6		7	8	9		10			11
		6. Acid Gas Emission	MA	Chem	One sample / Batch	--	NTPC ADS / IEC60754	NTPC ADS	QCR		P	--	--	
1.06	Wooden Drum	1. Dimension	MI	Meas	Manuf. Std.	--	IS 10418	IS10418	-do--		P	--	--	
		2. Anti termite treatment	MI	Chem	Cable manuf. std	--	CABLE MANUF. STD	CABLE MANUF. STD.	COC		V	V	V	COC from drum manuf.
1.07	Steel Drum	1. Dimension	MI	Meas	--do--	--	--do--	--do--	QCR		P	--	--	
		2. Surface finish	MI	Meas	--do--	--	--do--	--do--	--do-		P	--	--	
II	Process & Stage Inspection													
2.01	Wire Drawing	1.Surface finish	MA	Visual	One sample/Setting of each size	--	SHOULD BE SMOOTH & FREE FROM SCRATCHES	SHOULD BE SMOOTH & FREE FROM SCRATCHES	QCR		P	--	--	
		2. Wire Diameter	MA	Meas	--do--	--	NTPC ADS	NTPC ADS	--do-		P	--	--	
		3. Annealing Test	CR	Mech	--do--	Same as 6M	IS8130/NTPC ADS	IS8130/NTPC ADS	---do--		P	V	V	Refer Sl. No. 3.03(iii).
2.02	Bunching / stranding	1. No. of wires	MA	Meas	--do--	--	NTPC ADS	NTPC ADS	--do-		P	--	--	
		2.Dia of wire	MA	Meas	-do--	--	--do--	--do--	--do--		P	--	--	
		3. Dimension of Conductor	MA	Meas	--do--		--do--	--do--	--do--		P	--	--	
		4.Direction of lay	MA	Visual	--do--	--	--do-	--do--	--do--		P	--	--	
		5.Records of strand breakage / welding during conductor stranding	MA	Verify	--do--	--	IS 8130	IS8130	--do--		P	--	--	
		6.Surface finish	MA	Visual	--do--	-	--do--	--do--	--do--		P	--	--	
		7. DC Resistance	CR	Meas	--do--	-	IS8130/NTPC ADS	IS8130/ NTPC ADS	--do---		P	--	--	
2.03	Insulation extrusion	1. Surface finish	MA	Visual	--do--	-	NTPC spec	SHOULD BE SMOOTH. NO POROSITY IS PERMITTED.	--do--		P	--	--	PVC compound shall be preferably loaded in to extruder by suction method.
		2.Colour of cores	MA	Visual	--do--	-	NTPC ADS	NTPC ADS	--do--		P	--	--	

LEGEND:- *RECORDS, IDENTIFIED WITH "TICK" UNDER COLUMN "D" SHALL BE ESSENTIALLY INCLUDED BY SUPPLIER IN QA DOCUMENTATION.
-M:MANUFACTURER/SUPPLIER, C:MAIN SUPPLIER, N:NTPC, P:PERFORM W:WITNESS,V:VERFICATION AS APPROPRIATE, CHP: NTPC SHALL IDENTIFY IN COLUMN "N" AS "W"

	Item: 1.1 KV PVC Insulated FRLS Control cables		STANDARD QUALITY PLAN (CONFORMING TO CODE IS 1554 PART I AND NTPC TECHNICAL SPECIFICATION)				QP NO. 0000-999- QOE- S-040 REV-00 DATE : 25-11-11 Page 3 of 9 VALID UP TO: 24-11-14	REVIEWED BY INDERJIT SINGH VIKRAM TALWAR RAJEEV GARG		APPROVED BY A.K. Garg				
Sl. No	Component & Operations	Characteristics	Class	Type of check	Quantum of check		Reference Document	Acceptance Norms	Record Format	Agency				Remarks
					M	C/ N				D*	M	C	N	
1	2	3	4	5	6		7	8	9		10			11
		3.Core identification	MA	Visual	One sample/Setting of each size	--	NTPC ADS	NTPC ADS	QCR		P	--	--	Core printing shall be legible & indelible
		4.Thickness	CR	Meas	--do--	--	--do-	-do-	--do--		P	--	--	
		5.Spark Test	CR	Elect	100%	100%	CABLE MANUF STD.	No FAILURE	--do--		P	V	V	1.Spark test failure record is to be verified. 2.Core repairing not permitted
2.04	Laying up	1. Core sequence	MA	Visual	One sample/Setting of each size	--	IS 1554 (Part I)	IS 1554 (Part I)	--do--		P	--	--	
		2. Direction of lay	MA	Visual	--do--	--	-do-	--do--	--do--		P	--	--	
		3. Dia over laid up core	MA	Meas	--do--	--	NTPC ADS	NTPC ADS	--do--		P	--	--	
2.05	Inner Sheath	1.Colour	MA	Visual	-do--	-	--do--	--do--	--do--		P	--	--	
		2. Surface Finish	MA	Visual	100%	-	NTPC SPECIFICATION	FISH EYE, BLOW HOLE NOT PERMITTED	--do--		P	--	-	
		3.Thickness	MA	Meas	One sample/Setting of each size	-	NTPC ADS	NTPC ADS	--do--		P	--	--	
		4.Dia over inner sheath	MI	Meas	--do--.	-	--do--	---do--	--do--		P	--	--	
2.06	Armouring (As Applicable)	1.Dimension	MA	Meas	--do--	-	--do--	--do--	--do--		P	--	--	
		2.No. of wires / strip	MA	Meas.	--do--	-	--do--	--do--	--do--		P	--	--	

LEGEND:- *RECORDS, IDENTIFIED WITH "TICK" UNDER COLUMN "D" SHALL BE ESSENTIALLY INCLUDED BY SUPPLIER IN QA DOCUMENTATION.
-M:MANUFACTURER/SUPPLIER, C:MAIN SUPPLIER, N:NTPC, P:PERFORM W:WITNESS,V:VERFICATION AS APPROPRIATE, CHP: NTPC SHALL IDENTIFY IN COLUMN "N" AS "W"

NTPC	Item: 1.1 KV PVC Insulated FRLS Control cables	STANDARD QUALITY PLAN (CONFORMING TO CODE: IS 1554 PART 1 AND NTPC TECHNICAL SPECIFICATION)	QP. NO. 0000-999- QOE- S-040 REV-00 DATE : 25-11-11 Page 4 of 9 VALID UP TO: 24-11-14	REVIEWED BY INDERJIT SINGH VIKRAM TALWAR RAJEEV GARG	APPROVED BY Approved Dt... A.K. Garg

Sl. No	Component & Operations	Characteristics	Class	Type of check	Quantum of check M	Quantum of check C/ N	Reference Document	Acceptance Norms	Record Format	Agency D*	Agency M	Agency C	Agency N	Remarks
1	2	3	4	5	6		7	8	9		10			11
		3. Direction of lay	MA	Visual	One sample/Setting of each size	--	IS 1554 (Part 1)	IS 1554 (Part 1)	QCR		P	--	--	
		4 Coverage & Quality of armouring	MA	Meas.	100%	--	Min. area of coverage of armouring shall be 90%. The gap between amour wires / formed wires shall not exceed one amour wire/ formed wire space & there shall be no cross over/ over riding of amour wire / formed wire. Zn rich paint shall be applied on amour joint surface of G.S. Wire /formed wire. The breaking load of amour wire joint shall not be less than 95% of that amour wire / formed wire. (As per NTPC specification)		--do--		P	--	--	
		5 Dia over armouring	MA	Meas.	One sample/Setting of each size	--	NTPC ADS	NTPC ADS	--do--		P	--	--	
2.07	Outer Sheath	1. Surface finish	MA	Visual	100%	--	Pimple, Fish Eye, Burnt particles, Blow Hole not permitted. Repairing on outer sheath not permitted. (As per NTPC specification)		--do--		P	--	--	PVC FRLS compound shall be preferably loaded in to extruder by suction method
		2.Colour of sheath	MA	Visual	One sample/Setting of each size	--	NTPC ADS	NTPC ADS	--do-		P	--	--	
		3. Dia over outer sheath	MA	Meas	--do--	--	--do-	--do--	--do--		P	--	--	
		4 Thickness of outer sheath	CR	Meas	--do--	-	--do--	--do--	--do--		P	--	--	
		5. Embossing quality	MA	Visual	100%	-	Drum no., IS1554 Part –1 , Cable size, Voltage grade & Words "FRLS" at every 5 meter is to be embossed. Embossing shall be automatic, in line & marking shall be legible & indelible. (As per NTPC specification)		--do--		P	--	--	Drum no. on cable may be embossed/ printed.

LEGEND:- *RECORDS, IDENTIFIED WITH "TICK" UNDER COLUMN "D" SHALL BE ESSENTIALLY INCLUDED BY SUPPLIER IN QA DOCUMENTATION.
-M:MANUFACTURER/SUPPLIER, C:MAIN SUPPLIER, N:NTPC, P:PERFORM W:WITNESS,V:VERFICATION AS APPROPRIATE, CHP: NTPC SHALL IDENTIFY IN COLUMN "N" AS "W"

NTPC	Item: 1.1 KV PVC Insulated FRLS Control cables	STANDARD QUALITY PLAN (CONFORMING TO CODE. IS 1554 PART 1 AND NTPC TECHNICAL SPECIFICATION)	QP NO. 0000-999- QOE- S-040 REV-00 DATE : 25-11-11 Page 5 of 9 VALID UP TO: 24-11-14	REVIEWED BY INDERJIT SINGH VIKRAM TALWAR RAJEEV GARG	APPROVED BY A.K. Garg

Sl. No	Component & Operations	Characteristics	Class	Type of check	Quantum of check M	Quantum of check C/ N	Reference Document	Acceptance Norms	Record Format	Agency D*	Agency M	Agency C	Agency N	Remarks
1	2	3	4	5	6		7	8	9	10				11
		6. Sequencial marking	MA	Visual	Full length	–	Sequencial marking of length of cable in meter at every one meter is to be embossed / printed. Embossing / printing shall be progressive, automatic, in line & marking shall be legible & indelible. (A s per NTPC specification)		QCR		P	–	–	
C	Finished Cables													
3.01	Type test reports clearance from NTPC Engineering	All type tests as per NTPC specification	CR	Doc	100%	100%	NTPC SPECIFICATION / NTPC ADS / IS 1554 (PartI)	NTPC SPECIFICATION / NTPC ADS / IS 1554 (PartI)	-do--	✓	P	V	V	
3.02	Routine Tests	1.High Voltage test at room temperature	CR	Elect	100%	100%	NTPC ADS / IS 1554 (Part I)	NTPC ADS / IS 1554 (Part I)	Test certificate	✓	P	W	W	Refer note 2
		2.Conductor Resistance	CR	Elect	100%	100%	NTPC ADS / IS 1554 (Part I)	NTPC ADS / IS 1554 (Part I)	--do--	✓	P	W	W	
3.03	Acceptance Tests													
3.03(i)	Construction of finished Cable	1. OD of Cable	MA	Meas	Each type & size of cables as per sampling plan of IS 1554 (Part 1)		NTPC ADS	NTPC ADS	--do--	✓	P	W	W	
		2. Laying of core	CR	Visual	--do--		IS 1554 (Part I)	NTPC ADS / IS 1554 (Part I)	-do--	✓	P	W	W	
		3. Core Identification	CR	Visual	--do--		--do--	--do--	--do--	✓	P	W	W	Core printing shall be legible & indelible
		4. Colour of outer sheath	MA	Visual	--do--		NTPC ADS	NTPC ADS	--do--	✓	P	W	W	
		5. Inner sheath thickness	CR	Meas	- do -		--do--	--do--	--do--	✓	P	W	W	
		6. Inner sheath colour	MA	Visual	- do -		- do -	- do -	--do--	✓	P	W	W	
3.03 (ii)	Armour wires/ Formed wires (if applicable)	1.Dimensions	CR	Meas	Each type & size of cables as per sampling plan of IS 1554 (Part 1)		NTPC ADS /IS1554(PartI)/IS3975	NTPC ADS /IS1554(PartI)/ IS3975	--do--	✓	P	W	W	
		2. No. of wires/ formed wire	CR	Mech	-- do --		--do--	--do--	--do--	✓	P	W	W	
		3. Tensile test	CR	Mech	--do--		--do-	--do--	--do--	✓	P	W	W	

LEGEND:- *RECORDS, IDENTIFIED WITH "TICK" UNDER COLUMN "D" SHALL BE ESSENTIALLY INCLUDED BY SUPPLIER IN QA DOCUMENTATION.
-M:MANUFACTURER/SUPPLIER, C:MAIN SUPPLIER, N:NTPC, P:PERFORM W:WITNESS,V:VERFICATION AS APPROPRIATE, CHP: NTPC SHALL IDENTIFY IN COLUMN "N" AS "W"

NTPC	Item: 1.1 KV PVC Insulated FRLS Control cables	STANDARD QUALITY PLAN (CONFORMING TO CODE: IS 1554 PART I AND NTPC TECHNICAL SPECIFICATION)	QP. NO. 0000-999- QOE- S-040 REV-00 DATE: 25-11-11 Page 6 of 9 VALID UP TO: 24-11-14	REVIEWED BY INDERJIT SINGH VIKRAM TALWAR RAJEEV GARG	APPROVED BY A.K. Garg

Sl. No	Component & Operations	Characteristics	Class	Type of check	Quantum of check M	Quantum of check C/N	Reference Document	Acceptance Norms	Record Format	Agency D*	Agency M	Agency C	Agency N	Remarks
1	2	3	4	5	6		7	8	9			10		11
		4. Elongation test	CR	Mech	Each type & size of cables as per sampling plan of IS 1554 (Part I)		NTPC ADS /IS1554(PartI)/IS3975	NTPC ADS /IS1554(PartI)/ IS3975	Test certific ate	✓	P	W	W	
		5.Torsion test (for round wires only)	CR	Mech	--do--		--do--	--do--	--do--	✓	P	W	W	
		6. Wrapping test	CR	Mech	--do--		--do--	--do--	--do--	✓	P	W	W	
		7. Resistance test	CR	Mech	--do--		--do--	--do-	--do-	✓	P	W	W	
		8.Mass of Zinc coating	CR	Meas	--do--		--do--	--do--	--do--	✓	P	W	W	
		9. Uniformity of Zinc Coating	CR	Chem.	--do--		--do--	--do--	--do--	✓	P	W	W	
		10.Adhesion test	CR	Mech	--do--		--do--	--do-	--do--	✓	P	W	W	
		11.Freedom from defects	CR	Visual	--do--		--do--	--do--	--do--	✓	P	W	W	
3.03 (iii)	Conductor	1. Annealing Test	CR	Mech	-do--		NTPC ADS/ IS 8130	NTPC ADS/ IS 8130	--do--	✓	P	V	V	Refer Sl. No. 2.01
		2.Resistance Test	CR	Elect	--do--		--do--	--do--	--do--	✓	P	W	W	
3.03 (iv)	PVC Insulation & PVC Sheath	1.Thickness of insulation & sheath	CR	Meas	--do-		NTPC ADS/ IS 1554(PartI)	NTPC ADS/ IS 1554(PartI)	--do--	✓	P	W	W	
		2.Tensile strength & elongation at break of insulation & outer sheath (before ageing)	CR	Mech	--do--		--do--	--do--	--do--	✓	P	W	W	Refer Note 3 also
		3.Tensile strength & elongation at break of insulation & outer sheath (after Ageing)	CR	Mech	Refer Note 3		NTPC ADS/ IS 1554(PartI)	NTPC ADS/ IS 1554(PartI)	--do-	✓	P	W	W	Refer Note 3
		4. Insulation resistance (Volume resistivity method)	CR	Elect	Each type & size of cables as per sampling plan of IS 1554 (Part I)		--do--	--do--	--do--	✓	P	W	W	
		5.High voltage test at room temperature	CR	Elect	--do--		--do--	--do--	--do--	✓	P	W	W	
		6.Thermal stability on PVC Insulation and outer sheath	CR	Chem	One sample of each offered lot of all offered sizes		-do--	--do--	--do--	✓	P	W	W	
		7.Oxygen index Test on outer sheath	CR	Chem	--do--		NTPC ADS / IS10810 Part 58	NTPC A.D.S	--do-	✓	P	W	W	
		8.Smoke density rating test on outer sheath	CR	Chem	--do--		NTPC ADS & ASTMD2843	NTPC ADS	-do--	✓	P	W	W	

LEGEND:- *RECORDS, IDENTIFIED WITH "TICK" UNDER COLUMN "D" SHALL BE ESSENTIALLY INCLUDED BY SUPPLIER IN QA DOCUMENTATION.
-M:MANUFACTURER/SUPPLIER, C:MAIN SUPPLIER, N:NTPC, P:PERFORM W:WITNESS,V:VERFICATION AS APPROPRIATE, CHP: NTPC SHALL IDENTIFY IN COLUMN "N" AS "W"

NTPC	Item: 1.1 KV PVC Insulated FRLS Control cables		STANDARD QUALITY PLAN (CONFORMING TO CODE IS 1554 PART 1 AND NTPC TECHNICAL SPECIFICATION)				QP. NO 0000-999- QOE- S-040 REV-00 DATE · 25-11-11 Page 7 of 9 VALID UP TO· 24-11-14	REVIEWED BY INDERJIT SINGH VIKRAM TALWAR RAJEEV GARG		APPROVED BY A.K. Garg					
Sl. No	Component & Operations	Characteristics	Class	Type of check	Quantum of check M	Quantum of check C/ N	Reference Document	Acceptance Norms	Record Format	Agency D#	Agency M	Agency C	Agency N	Remarks	
1	2	3	4	5	6		7	8	9	10				11	
		9.Acid gas generation test on outer sheath	CR	Chem	One sample of each offered lot of all offered sizes		NTPC ADS & IEC 60754-1	NTPC ADS	Test certificate	✓	P	W	W		
		10.Flammability test on completed cable	CR	Chem	Refer Note 4	Refer Note 4	NTPC ADS & IEC 60332 Part-3 Category-B)	NTPC ADS	--do--	✓	P	W	W		
		11.Surface finish & length measurement.	CR	Visual & Meas	One length of each size	One length of each size	(1) Drum no. (2) IS 1554 –Part-1 (3) Cable size, Voltage grade & Words " FRLS" at every 5 meter is to be embossed Embossing shall be automatic, in line & marking shall be legible & indelible. (4) Sequential marking of length of cable in meter at every one meter is to be embossed / printed Embossing / printing shall be progressive, automatic, in line & marking shall be legible & indelible		--do--	✓	P	W	W	Pimple, Fish Eye, Burnt particles, Blow Hole etc not permitted. Repairing on outer sheath not permitted.	
		12. Sequence of cores armour coverage, gap between two consecutive armour/ formed wire	CR	Visual & Meas	One length of each size	One length of each size	Min. area of coverage of armouring shall be 90%. The gap between armour wires / formed wires shall not exceed one armour wire/ formed wire space & there shall be no cross over/ over riding of armour wire / formed wire Zn rich paint shall be applied on armour joint surface of G.S. Wire /formed wire		--do--	√	P	W	W		
4	Packing	1. Sealing	MA	Visual	100%	100%	(1)IS1554(Part-I) (2) The surface of the drum and the outer most cable layer shall be covered with water proof cover. (3) Both the ends of cables shall be properly sealed with heat shrinkable PVC/ rubber caps secured by "U" nails		QCR	✓	P	–	–		
4.01	Identification	NTPC Sealing	MA	Visual	100%	100%	Sealing shall be visible	Sealing shall be visible	–do–	✓	P	V	V		

LEGEND:- *RECORDS, IDENTIFIED WITH "TICK" UNDER COLUMN "D" SHALL BE ESSENTIALLY INCLUDED BY SUPPLIER IN QA DOCUMENTATION.
-M:MANUFACTURER/SUPPLIER, C:MAIN SUPPLIER, N:NTPC, P:PERFORM W:WITNESS,V:VERFICATION AS APPROPRIATE, CHP: NTPC SHALL IDENTIFY IN COLUMN "N" AS "W"

Sl. No	Component & Operations	Characteristics	Class	Type of check	Quantum of check	Reference Document	Acceptance Norms	Record Format	Agency	Remarks

Notes:

1)	If the compound manufacturer is carrying out Ageing test , test report of compound manufacturer is to be reviewed. If the compound manufacturer is not carrying out ageing test, then cable manufacturer is to carry out ageing test & test report is to be reviewed (quantum of ageing test sample shall be one sample /batch)
2)	(a) **In case of manufacturers / supplier who have supplied cables in the past through Corporate Centre/ Regional Offices** :- Routine Test of manufacturer internal test report are to be verified by NTPC at the time of final inspection. 2(b) **In case of manufacturers / supplier WHO HAVE NOT SUPPLIED cables in the past through Corporate Centre/ Regional Offices**,:- Routine Test are to be witnessed by Main Contractor & NTPC. This is in addition to manufacturer internal test report to be verified by NTPC at the time of final inspection.
3)	**Refer table on page 8 of 8 for Sampling & Acceptance criteria.**
4)	The test shall be carried out on every size & type of control cable offered for inspection as an acceptance test. This test will be carried out using composite sampling i.e. irrespective of sizes of cables of a particular type, may be tested together as per calculations in line with the IEC (all sizes will be covered)
LEGEND:	**NTPC ADS: NTPC approved data sheet, QCR: quality control records of cable manufacturer, CABLE MANUF STD- cable manufacturer's internal plant standard, MI: minor, MA: major, CR: critical, COC- certificate of conformance**

Sl. No	Component & Operations	Characteristics	Class	Type of check	Quantum of check	Reference Document	Acceptance Norms	Record Format	Agency	Remarks

SAMPLING & ACCEPTANCE CRITERIA

Criteria	Manufacturer experience prerequisite	Condition	Testing procedure	Remarks
Samples as per relevant IS from every size of cable in the offered lot shall be tested for Tensile Strength & Elongation (before ageing). The values will be compared with corresponding values mentioned in the Type Test report accepted by NTPC. These values of Tensile Strength & Elongation (before ageing) should be within +/ - 15% tolerance (final values should be more than the minimum values indicated in relevant standard) of the Type Test report	In case of Manufacturers/ Supplier who have supplied cables in the past through Corporate Centre / Regional offices	In case of sizes which meet the criteria	1 Sample per type out of sizes which have met the criteria, will be put on accelerated ageing test (refer IRS specification no. IRS: S-63/2007 Rev 3.0). The samples shall be aged in air oven at temperature of 130°c+/- 2°c for 5 hours. After wards the samples shall be tested for Tensile Strength & Elongation. Acceptance norms shall be as per relevant IS. **This test shall be witnessed by NTPC.**	In case the samples do not meet the requirement in accelerated ageing test then 1 sample of that size will be put on ageing test as per IS.
		In case of size which do not meet the criteria	Particular size will be put on ageing test as per IS. **This test shall be witnessed by NTPC.**	----
	In case of Manufacturers/ Supplier WHO HAVE NOT SUPPLIED cables in the past through Corporate Centre / Regional offices	In case of size which meet the criteria	1 Sample per type out of all sizes which have met the criteria, will be put on aging test and **witnessed by NTPC as per relevant IS**	----
		In case of size which do not meet the criteria	Particular size will be put on ageing test as per IS. **This test shall be witnessed by NTPC**	----

NTPC	Item:- HT POWER FRLS CABLE (3.3 KV TO 33 KV)	STANDARD QUALITY PLAN (CONFORMING TO CODE:IS 7098 Part-II AND NTPC TECHNICAL SPECIFICATION)	QP. NO. 0000-999- QOE- S-042 REV-00 DATE : 12-04-12 Page 1 of 12 VALID UP TO: 11-04-15	REVIEWED BY INDERJIT SINGH VIKRAM TALWAR RAJEEV GARG	APPROVED BY Dr. A.K. Garg	1

Sl No	Component & Operation	Characteristics	Class	Type of check	Quantum of check M	Quantum of check C/N	Reference Document	Acceptance Norms	Record Format	Agency D*	Agency M	Agency C	Agency N	Remarks
1	2	3	4	5	6		7	8	9	10				11

Instructions: 1) Cable manufacturer to maintain records to show co- relation of raw materials to finished cables i e raw material batch/ lot no. should be traceable to the final cable drum number or batch number
2) Cable manufacturer to maintain all quality control records identified as per all QP stages enumerated below whether it is identified for NTPC verification or witness or not.
3) Sources of raw material shall be submitted at the time of submission of endorsement sheet for approval by NTPC.

A	Raw material/ Brought out Items													
1.01	Aluminium rod for conductor	1.Make	MA	Verify	100%	--	MANUFACTURER APPROVED SOURCES	MANUFACTURER APPROVED SOURCES	QCR		V	--	--	
		2. Grade	MA	--do--	--do--	--	NTPCADS	NTPC ADS	--do--		V	--	--	
		3. Resistivity	MA	Elect	As per cable mnfr std.	--	IS 5082	IS 5082	-do--		P	--	--	
1.02	Aluminium rod for Armouring (as applicable)	1. Make	MA	Verify	100%	--	MANUFACTURER APPROVED SOURCES	MANUFACTURER APPROVED SOURCES	Q.C.R		V	--	--	
		2. Grade	MA	Verify	As per mnfr std.	--	NTPC ADS	NTPC ADS	Manuf. TC		V	--	--	
		3. Resistivity	MA	Verify	-do-	-	IS 5082	IS 5082	-do--		P	--	--	
1.03	Copper rod (If applicable)	1. Make	MA	Verify	100%	--	Manufacturer approved vender	Manufacturer approved vender	QCR		V	--	--	
		2. Resistivity	MA	Verify	As per cable mnfr std.	--	IS 613	IS 613	--do--		P			
1.04	XLPE compound for insulation	1. Make	MA	Verify	--do--	100%	MANUFACTURER APPROVED SOURCES	MANUFACTURER APPROVED SOURCES	--do--		V	V	V	
		2. Type/ Grade	MA	Verify	100%	100%	NTPC ADS	NTPC ADS	--do--		V	V	V	
		3. Shelf life/ Storage condition	MA	Verify	100%	100%-	Compound manuf. Std	Compound manuf. Std	QCR		V	V	V	
		4. All acceptance test as per manufacturer norms	MA	Verify	As per manufacturer norms	As per manufacturer norms	NTPC ADS	NTPC ADS	Supplier TC		V	V	V	Refer note 1

LEGEND:- *RECORDS, IDENTIFIED WITH "TICK" UNDER COLUMN "D" SHALL BE ESSENTIALLY INCLUDED BY SUPPLIER IN QA DOCUMENTATION.
-M:MANUFACTURER/SUPPLIER, C:MAIN SUPPLIER, N:NTPC, P:PERFORM W:WITNESS,V:VERFICATION AS APPROPRIATE, CHP: NTPC SHALL IDENTIFY IN COLUMN "N" AS "W"

Sl No	Component & Operations	Characteristics	Class	Type of check	Quantum of check M	Quantum of check C/N	Reference Document	Acceptance Norms	Record Format	Agency D*	Agency M	Agency C	Agency N	Remarks
1	2	3	4	5	6		7	8	9	10				11
1.05	PVC Compound for inner sheath	1. Make	MA	Verify	As per manufacturer norms	--	MANUFACTURER APPROVED sources	MANUFACTURER APPROVED sources	Supplier TC		V	V	--	
		2. Type/ Grade	MA	Verify	--do--	--	NTPC ADS	NTPC ADS	--do--		V	V	--	
1.06	Semi Conducting Compound	1.Make	MA	Verify	100%	100%	NTPC Approved sources	NTPC Approved sources	--do--		P	V	V	
		2. Resistivity	MA	--do--	100%	100%	NTPCADS	NTPCADS	--do--		P	V	V	
		3. Shelf Life / Storage condition	MA	Verify	100%	100%	Compound manuf. recommendation	Compound manuf. recommendations	--do--		P	V	V	
1.07	Copper tape (Electrolytic High Conductivity Copper Foils)	1. Make	MA	Verify	100%	100%	NTPC Approved sources	NTPC Approved sources	--do--	V	P	V	V	
		2. Dimension	MA	Measu	As per cable mnfr std.	--	NTPC ADS	NTPC ADS	--do--		P	--	--	
		3. Resistivity	MA	Verify	100%	---	IS 613	IS 613	Supplier TC		V	V	V	
		4. Chem & Phy. properties	MA	Elec & Mech.	As per cable mnfr std.	--	As per cable mnfr std.	As per cable mnfr std.	--do--		V	V	-	
1.08	Polyester Tape (As applicable)	1.Make	MA	Verify	100%	100%	Manufacturer approved vendor	Manufacturer approved vendor	--do--		P	V	V	
		2. Dimension	Phy.	Meas	As per cable mnfr std.	--	Manuf. Data sheet	Manuf. Data sheet	--do--		P	-	-	
		3. T.S & Elongation	Phy.	Phy.	-do--	--	--do--	--do--	--do--		V	--	--	

LEGEND:- *RECORDS IDENTIFIED WITH "TICK" UNDER COLUMN "D" SHALL BE ESSENTIALLY INCLUDED BY SUPPLIER IN QA DOCUMENTATION.
-M:MANUFACTURER/SUPPLIER, C:MAIN SUPPLIER, N:NTPC, P:PERFORM W:WITNESS,V:VERFICATION AS APPROPRIATE, CHP: NTPC SHALL IDENTIFY IN COLUMN "N" AS "W"

Sl No	Component & Operations	Characteristics	Class	Type of check	Quantum of check M	Quantum of check C/N	Reference Document	Acceptance Norms	Record Format	Agency D*	Agency M	Agency C	Agency N	Remarks
1	2	3	4	5	6		7	8	9	10				11
1.09	Steel wire / Formed Wire (As applicable)	1. Make	MA	Verify	As per cable mnfr std.	100%	MANUFACTURER APPROVED sources	MANUFACTURER APPROVED sources	QCR		V	V	V	BIS licensee only
		2. Dimension	MA	Meas	1 sample from each size / lot	--	NTPC APPROVED DATA SHEET & IS 3975	NTPC APPROVED DATA SHEET & IS 3975	QCR		P	--	--	
		3. All acceptance tests as per IS 3975	MA	Verify	As per IS 3975	--	IS 3975	IS 3975	Supplier TC		V	V	--	
1.10	PVC compound for Sheath	1. Make	MA	Verify	As per manufacturer norms	100%	MANUFACTURER APPROVED sources	MANUFACTURER APPROVED sources	QCR		V	V	V	
		2. Type / Grade	MA	Verify	100%	100%	NTPC ADS	NTPC ADS	QCR		V	V	V	
		3. All acceptance test as per manufacturer norms	MA	Verify	As per manufacturer norms	As per manufacturer norms	Compound Mnfr standard	IS 5831	QCR		V	V	V	Refer note 1
		4. Thermal Stability	MA	Chem	One sample / Batch	--	IS 5831	IS 5831	QCR		P	--	--	
		5. Oxygen Index	MA	Chem	--do--	--	NTPC ADS/ IS 10810 Part 58	NTPC ADS	--do--		P	--	--	
1.11	Filler Material (As applicable	1. Type	MA	Verify	As per manuf. Std.	----	NTPC ADS	NTPC ADS	QCR	-	P	--	--	
1.12	Wooden Drum	1. Dimension	MI	Meas	Manuf. Std	--	IS 10418	IS10418	--do--		P	--	--	
		2. Anti termite treatment	MI	Chem	Cable manuf. std	--	CABLE MANUF. STD	CABLE MANUF. STD.	COC		V	V	V	COC from drum manuf
1.13	Steel Drum	1. Dimension	MI	Meas	--do--	--	--do--	--do--	QCR		P	--	--	
		2. Surface finish	MI	Meas	--do--	--	--do--	--do--	--do-		P	--	--	
II	Process & Stage Inspection													
2.01	Wire Drawing	1.Surface finish	MA	Visual	One sample/Setting of each size	--	SHOULD BE SMOOTH & FREE FROM SCRATCHES	SHOULD BE SMOOTH & FREE FROM SCRATCHES	QCR		P	--	--	
		2. Wire Diameter	MA	Meas	--do--	--	NTPC ADS	NTPC ADS	--do-		P	--	--	

LEGEND:- *RECORDS, IDENTIFIED WITH "TICK" UNDER COLUMN "D" SHALL BE ESSENTIALLY INCLUDED BY SUPPLIER IN QA DOCUMENTATION.
-M:MANUFACTURER/SUPPLIER, C:MAIN SUPPLIER, N:NTPC, P:PERFORM W:WITNESS,V:VERFICATION AS APPROPRIATE, CHP: NTPC SHALL IDENTIFY IN COLUMN "N" AS "W"

Sl No	Component & Operations	Characteristics	Class	Type of check	Quantum of check M	Quantum of check C/N	Reference Document	Acceptance Norms	Record Format	D*	M	C	N	Remarks
1	2	3	4	5	6		7	8	9	10				11
		3. Tensile test	CR	Mech	One sample/Setting of each size	One sample / Setting of each size	IS 8130	IS 8130	QCR		P	V	V	Refer Sl No.3.03(m)
		4. Wrapping test	CR	Mech	--do--	--do--	--do--	--do--	--do--		P	V	V	--do--
		5. Annealing Test	CR	Mech	--do--	--do--	--do--	--do--	-do-		P	V	V	--do--
2.02	Bunching / stranding	1. No. of wires	MA	Meas	--do--	--	NTPC ADS	NTPC ADS	--do-		P	--	--	
		2.Dia of wire	MA	Meas	-do-	--	--do--	--do--	--do--		P	--	--	
		3. Dimension of Conductor	MA	Meas	--do--	--	--do--	--do--	--do--		P	--	--	
		4.Direction of lay	MA	Visual	--do--	--	--do-	--do--	--do--		P	--	--	
		5.Records of strand breakage / welding during conductor stranding	MA	Verify	--do--	--	IS 8130	IS8130	--do--		P	--	--	
		6.Surface finish	MA	Visual	--do--	--	--do--	--do--	--do-		P	--	--	
		7. DC Resistance	CR	Meas	--do--	--	IS8130/NTPC ADS	IS8130/ NTPC ADS	--do--		P	--	--	
2.03	Insulation extrusion (Conductor screen, XLPE Insulation & Insulation screen)	1. Surface finish	MA	Visual	One sample / Setting of each size	--	Extrusion should be by triple extrusion technique Method of curing for cables shall be "dry curing / gas curing/ steam curing" up to 11KV & " dry curing/ gas curing " for 19/33 KV Insulation extrusion area should be preferably clean & dust free. Extrusion Should be smooth. No porosity is permitted		QCR		P	-	--	
		2.Thickness	CR	Meas	--do--	--	NTPC ADS	NTPC ADS	QCR		P	--	--	
		3. Eccentricity & Ovality	CR	Meas	--do--	--	Eccentricity of core shall not exceed 10% and Ovality not to exceed 2%	Eccentricity of core shall not exceed 10% and Ovality not to exceed 2%	--do--		P	--	--	
		3.Hot Set	CR	Mech	One sample/Setting of each size	--	IS 7098- Part II	IS 7098- Part II	--do--		P	--	--	Sample is to be taken from both top & bottom end

LEGEND:- *RECORDS, IDENTIFIED WITH "TICK" UNDER COLUMN "D" SHALL BE ESSENTIALLY INCLUDED BY SUPPLIER IN QA DOCUMENTATION.
M:MANUFACTURER/SUPPLIER, C:MAIN SUPPLIER, N:NTPC, P:PERFORM W:WITNESS,V:VERFICATION AS APPROPRIATE, CHP: NTPC SHALL IDENTIFY IN COLUMN "N" AS "W"

2.04	Copper Taping	1. Thickness	CR	Mech	One sample/Setting of each size	--	NTPC ADS	NTPCADS	QCR		P	--	--	
		2. No. of tape	CR	Meas	--do--	--	--do--	--do-	--do--		P	--	--	
		3. Tape application overlap	CR	Meas	--do--	--	--do--	---do--	--do--		P	--	--	
		4. Core identification tape	CR	Visual	--do--	--	--do--	---do--	--do--		P	--	--	
2.05	Laying up	1. Core sequence	MA	Visual	--do--	--	IS 7098- Part II	IS 7098- Part II	--do--		P	--	--	
		2. Direction of lay	MA	Visual	--do--	--	-do-	--do--	--do--		P	--	--	
		3. Lay Length	MA	Meas	--do--	--	Manuf. Std	Manuf. Std	--do-					
		4. Dia over laid up core	MA	Meas	--do--	--	NTPC ADS	NTPC ADS	--do--		P	--	--	
2.06	Inner Sheath	1.Colour	MA	Visual	-do--	-	--do--	--do--	--do--		P	--	--	
		2.Thickness	MA	Meas	One sample/Setting of each size	-	NTPC ADS	NTPC ADS	--do--		P	--	--	
		3.Dia over inner sheath	MI	Meas	--do--.	-	--do--	---do--	--do--		P	--	--	
2.07	Armouring (As Applicable)	1.Dimension	MA	Meas	--do--	-	--do--	--do--	--do--		P	--	--	
		2.No. of wires / strip	MA	Meas.	--do--	-	--do--	--do--	--do--		P	--	--	
		3. Direction of lay	MA	Visual	--do--	--	IS 7098- Part II	IS 7098- Part II	QCR		P	--	--	
		4.Coverage & Quality of armouring	MA	Meas.	100%	--	Min. area of coverage of armouring shall be 90%. The gap between amour wires / formed wires shall not exceed one amour wire/ formed wire space & there shall be no cross over/ over riding of amour wire / formed wire. Zn rich paint shall be applied on amour joint surface of G.S. Wire /formed wire. The breaking load of amour wire joint shall not be less than 95% of that amour wire / formed wire. (As per NTPC specification)		QCR		P	--	--	
		5.Dia over armouring	MA	Meas.	One sample/Setting of each size	--	NTPC ADS		--do--		P	--	--	--
2.08	Outer Sheath	1. Surface finish	MA	Visual	100%	--	Pimple, Fish Eye, Burnt particles, Blow Hole not permitted. Repairing on outer sheath not permitted (As per NTPC specification) PVC FRLS compound shall be preferably loaded in to		--do--		P	--	--	

LEGEND:- *RECORDS, IDENTIFIED WITH "TICK" UNDER COLUMN "D" SHALL BE ESSENTIALLY INCLUDED BY SUPPLIER IN QA DOCUMENTATION.
-M:MANUFACTURER/SUPPLIER, C:MAIN SUPPLIER, N:NTPC, P:PERFORM W:WITNESS,V:VERFICATION AS APPROPRIATE, CHP: NTPC SHALL IDENTIFY IN COLUMN "N" AS "W"

Sl. No	Component & Operations	Characteristics	Class	Type of check	Quantum of check M	Quantum of check C/N	Reference Document	Acceptance Norms	Record Format	D*	M	C/N	Remarks
1	2	3	4	5	6		7	8	9	10			11
							extruder by suction method.						
		2.Colour of sheath	MA	Visual	One sample/Setting of each size	–	NTPC ADS	NTPC ADS	QCR		P	--	--	
		3. Dia over outer sheath	MA	Meas	--do--	--	NTPC ADS	NTPC ADS	--do--		P	--	--	
		4.Thickness of outer sheath	CR	Meas	--do--	-	--do--	--do--	--do--		P	--	--	
		5. Embossing quality	MA	Visual	100%	-	Following shall be embossed or printed on outer sheath at every 5 meter length of cable: (1) Batch number or Drum number (2) IS 7098-II (3) Cable size (4) Voltage grade (5) word "FRLS" (marking shall be legible & indelible)	--do--			P	--	--	
		6. Sequencial marking	MA	Visual	Full length	–	Sequential marking of length of cable in meters at every one meter is to be embossed or printed. Embossing or printing shall be progressive, automatic, in line & marking shall be legible & indelible	--do--			P	--	--	
C	Finished Cables												
3.01	Type Test clearance from NTPC Engineering to be verified at the time of final inspection.												
3.02	Routine Tests	1.High Voltage test at room temperature	CR	Elect	100%	100%	NTPC ADS / IS 7098- Part II	NTPC ADS	Test certificate	✓	P	W	W	Refer note 2
		2.Conductor Resistance	CR	Elect	100%	100%	NTPC ADS / IS 7098- Part II	NTPC ADS	--do--	✓	P	W	W	Refer note 2
		3. Partial Discharge Test	CR	Elect	100%	100%	NTPC ADS / IS 7098- Part II	NTPC ADS	-do--	√	P	W	W	For Screened cable only/ Refer note 2
3.03	Acceptance Tests												
3.03 (i)	Construction of finished Cable	1. OD of Cable	MA	Meas	Each type & size of cables as per sampling plan of IS 7098- Part II		NTPC ADS	NTPC ADS	--do--	✓	P	W	W	
		2. Laying of core	CR	Visual	--do--		NTPC ADS / IS 7098- Part II	NTPC ADS / IS 7098- Part II	--do--	✓	P	W	W	
		3. Core Identification	CR	Visual	--do--		--do--	--do--	--do--	✓	P	W	W	

LEGEND:- *RECORDS, IDENTIFIED WITH "TICK" UNDER COLUMN "D" SHALL BE ESSENTIALLY INCLUDED BY SUPPLIER IN QA DOCUMENTATION.
-M:MANUFACTURER/SUPPLIER, C:MAIN SUPPLIER, N:NTPC, P:PERFORM W:WITNESS,V:VERFICATION AS APPROPRIATE, CHP: NTPC SHALL IDENTIFY IN COLUMN "N" AS "W"

Sl. No	Component & Operations	Characteristics	Class	Type of check	Quantum of check M	Quantum of check C/N	Reference Document	Acceptance Norms	Record Format	Agency D*	Agency M	Agency C	Agency N	Remarks
1	2	3	4	5	6		7	8	9	10				11
		4. Colour of outer sheath	MA	Visual	Each type & size of cables as per sampling plan of IS 7098- Part II		NTPC ADS	NTPC ADS	QCR	✓	P	W	W	
		5. Inner sheath thickness	CR	Meas	- do -		--do--	--do--	--do--	✓	P	W	W	
		6. Inner sheath colour	MA	Visual	- do -		- do -	- do -	--do--	✓	P	W	W	
		7. Copper tape / Wire dimension with overlap (As applicable)	CR	Phy	--do--		NTPC ADS/ Min overlap 20%	NTPC ADS/ Min. overlap 20%	--do--	✓	P	W	W	
3.03 (ii)	Armour wires/ Formed wires	1.Dimensions	CR	Meas	Each type & size of cables as per sampling plan of IS 7098- Part II		NTPC ADS/ IS7098-1;	NTPC ADS	Test Certific	✓	P	W	W	Test as applicable for Galvanized wires/ strips / Al wires
		2. No. of wires/ formed wire	CR	Mech	-- do --		--do--	--do--	--do--	✓	P	W	W	
		3. Tensile test	CR	Mech	--do--		IS 3975	IS 3975	--do--	✓	P	W	W	
		4. Elongation test	CR	Mech	--do--		--do--	--do--	--do--	✓	P	W	W	
		5.Torsion test (for round wires only)	CR	Mech	--do--		--do--	--do--	--do--	✓	P	W	W	
		6. Wrapping test	CR	Mech	--do--		--do--	--do--	--do--	✓	P	W	W	
		7. Resistance test	CR	Mech	--do--		--do--	--do-	--do-	✓	P	W	W	
		8.Mass of Zinc coating	CR	Meas	--do--		--do--	--do--	--do--	✓	P	W	W	
		9. Uniformity of Zinc Coating	CR	Chem	--do--		--do--	--do--	--do--	✓	P	W	W	
		10.Adhesion test	CR	Mech	--do--		--do--	--do-	--do--	✓	P	W	W	
		11.Freedom from defects	CR	Visual	--do--		--do--	--do--	--do--	✓	P	W	W	
3.03 (iii)	Conductor	1.Resistance Test	CR	Elect	--do--		--do--	--do--	--do--	✓	P	W	W	
		2.Tensile test	CR	Mech	Each type & size of cables as per sampling plan of IS 7098-Part-II		IS 8130	IS 8130	Test Certific ate	✓	P	W	W	Test report of manufacturer to be reviewed as per Sl. No. 2.01 for Tensile test & wrapping test

LEGEND:- *RECORDS, IDENTIFIED WITH "TICK" UNDER COLUMN "D" SHALL BE ESSENTIALLY INCLUDED BY SUPPLIER IN QA DOCUMENTATION.
-M:MANUFACTURER/SUPPLIER, C:MAIN SUPPLIER, N:NTPC, P:PERFORM W:WITNESS,V:VERFICATION AS APPROPRIATE, CHP: NTPC SHALL IDENTIFY IN COLUMN "N" AS "W"

Sl No	Component & Operations	Characteristics	Class	Type of check	Quantum of check M	Quantum of check C/N	Reference Document	Acceptance Norms	Record Format	Agency D*	Agency M	Agency C	Agency N	Remarks
1	2	3	4	5	6		7	8	9	10				11
		3.Wrapping test	CR	Mech	--do--		--do--	--do--	-do--	√	P	P	W	--do--
3.03 (iv)	XLPE insulation & PVC Sheath	1.Thickness of insulation & sheath	CR	Meas.	--do-		NTPC ADS & IS 7098-Part II	NTPC ADS	--do--	✓	P	W	W	
		2.Tensile strength & elongation at break of insulation & outer sheath (before ageing)	CR	Mech	--do--		IS 7098-Part II	IS 7098-Part II		✓	P	W	W	Refer Note 3 Also
		3.Tensile strength & elongation at break of insulation & outer sheath (after Ageing)	CR	Mech	Refer Note 3		IS 7098-Part II	IS 7098-Part II	Test Certificate	✓	P	W	W	Refer Note 3
		4. Insulation resistance (Volume resistivity method)	CR	Elect	Each type & size of cables as per sampling plan of IS 7098-Part II		--do--	--do--	--do--	✓	P	W	W	
		5. Partial Discharge test	CR	Elect.	--do--		--do--	--do--	--do--	√	P	W	W	For Screened cable only
		6.High voltage test at room temperature	CR	Elect	Each type & size of cables as per sampling plan of IS 7098-Part II		--do--	--do--	--do--	✓	P	W	W	
		7.Thermal stability on outer sheath	CR	Chem	One sample of each offered lot of all offered sizes		-do-	--do--	--do--	✓	P	W	W	

LEGEND:- *RECORDS, IDENTIFIED WITH "TICK" UNDER COLUMN "D" SHALL BE ESSENTIALLY INCLUDED BY SUPPLIER IN QA DOCUMENTATION.
-M:MANUFACTURER/SUPPLIER, C:MAIN SUPPLIER, N:NTPC, P:PERFORM W:WITNESS,V:VERFICATION AS APPROPRIATE, CHP: NTPC SHALL IDENTIFY IN COLUMN "N" AS "W"

Sl. No	Component & Operation	Characteristics	Class	Type of check	Quantum of check M	Quantum of check C/N	Reference Document	Acceptance Norms	Record Format	Agency D*	Agency M	Agency C	Agency R	Remarks
1	2	3	4	5	6		7	8	9	10				11
		8. Hot Set Test for insulation	CR	Mech	Each type & size of cables as per sampling plan of IS 7098-Part II		IS 7098-Part II	IS 7098-Part II	QCR	✓	P	W	W	For XLPE insulation only
		9.Smoke density test on outer sheath	CR	Chem	One sample of each offered lot of all offered sizes		NTPC ADS & ASTMD2843	NTPC ADS	-do--	✓	P	W	W	
		10.Acid gas generation test on outer sheath	CR	Chem	--do--		NTPC ADS & IEC 60754-1	NTPC ADS	--do--	✓	P	W	W	
		11. Oxygen Index	CR	Chem	-do--		NTPC ADS/ IS 10810 Part 58	--do--	--do--	√	P	W	W	
		12.Flammability test on completed cable	CR	Chem	One sample irrespective of size per voltage grade		NTPC ADS & IEC 60332 Part-3 (Category-B)	--do--	--do--	✓	P	W	W	
		13.Surface finish & length measurement.	CR	Visual & Meas	One length of each size	One length of each size	A) Following shall be embossed or printed on outer sheath at every 5 meter length of cable: (1) Batch number or Drum number (2) IS 7098-II (3) Cable size (4) Voltage grade (5) word "FRLS" (marking shall be legible & indelible) B) Sequential marking of length of cable in meters at every one meter is to be embossed or printed. Embossing or printing shall be progressive, automatic, in line & marking shall be legible & indelible		Test Certificate	✓	P	W	W	Pimple, Fish Eye, Burnt particles, Blow Hole etc. not permitted. Repairing on outer sheath not permitted.
		14. Sequence of cores armour coverage, gap between two consecutive armour/ formed wire	CR	Visual & Meas	One length of each size	One length of each size	Min. area of coverage of armouring shall be 90%. The gap between armour wires / formed wires shall not exceed one armour wire/ formed wire space & there shall be no cross over/ over riding of armour wire / formed wire. Zn rich paint shall be applied on armour joint surface of G.S. Wire /formed wire		--do-	√	P	W	W	
		15. Measurement of Eccentricity & Ovality	CR	Meas	--do--	--do--	Eccentricity of core shall not exceed 10% and Ovality not to exceed 2%		-do--	√	P	W	W	

LEGEND:- *RECORDS IDENTIFIED WITH "TICK" UNDER COLUMN "D" SHALL BE ESSENTIALLY INCLUDED BY SUPPLIER IN QA DOCUMENTATION.
-M:MANUFACTURER/SUPPLIER, C:MAIN SUPPLIER, N:NTPC, P:PERFORM W:WITNESS,V:VERFICATION AS APPROPRIATE, CHP: NTPC SHALL IDENTIFY IN COLUMN "N" AS "W"

Sl. No	Component & Operations	Characteristics	Class	Type of check	Quantum of check M	Quantum of check C/N	Reference Document	Acceptance Norms	Record Format	Agency D*	Agency M	Agency C	Agency N	Remarks
1	2	3	4	5	6		7	8	9	10				11
4	Packing	1. Sealing	MA	Visual	100%	100%	(1) IS 7098-Part II (2) The surface of the drum and the outer most cable layer shall be covered with water proof cover (3) Both the ends of cables shall be properly sealed with heat shrinkable PVC/ rubber caps secured by "U" nails		QCR	✓	P	--	--	
4.01	Identification	NTPC Sealing	MA	Visual	100%	100%	Sealing shall be visible		QCR	√	P	V	V	

Notes:

1) If the compound manufacturer is carrying out Ageing test , test report of compound manufacturer is to be reviewed. If the compound manufacturer is not carrying out ageing test, then cable manufacturer will carry out ageing test & the test report will be reviewed by NTPC (quantum of ageing test sample shall be one sample /batch)

2) (a) **In case of manufacturers / supplier who have supplied cables in the past through Corporate Centre/ Regional Offices** :- Routine Test of manufacturer internal test report are to be verified by NTPC at the time of final inspection. NTPC will also witness routine tests on cables on 10% sample basis on 1.9 KV/ 3.3 KV and 3.3KV/ 3.3 KV cables , other HT cables will be witnessed on 100% basis.
2(b) **In case of manufacturers / supplier WHO HAVE NOT SUPPLIED cables in the past through Corporate Centre/ Regional Offices**,:- Routine Test of manufacturer internal test report are to be verified by NTPC at the time of final inspection. NTPC will also witness routine tests on cables for the first order on 100% basis.

3) **Refer table on page 11& 12 of 12 for Sampling & Acceptance criteria.**

LEGEND:- *RECORDS, IDENTIFIED WITH "TICK" UNDER COLUMN "D" SHALL BE ESSENTIALLY INCLUDED BY SUPPLIER IN QA DOCUMENTATION.
-M:MANUFACTURER/SUPPLIER, C:MAIN SUPPLIER, N:NTPC, P:PERFORM W:WITNESS,V:VERFICATION AS APPROPRIATE, CHP: NTPC SHALL IDENTIFY IN COLUMN "N" AS "W"

Sl No	Component & Operation	Characteristics	Class	Type of check	Quantum of check M	Quantum of check C/N	Reference Document	Acceptance Norms	Record Format	Agency D*	Agency M	Agency C	Agency N	Remarks
1	2	3	4	5	6		7	8	9	10				11

LEGEND:	NTPC ADS: NTPC approved data sheet, QCR: quality control records of cable manufacturer, CABLE MANUF STD- cable manufacturer's internal plant standard, MI: minor, MA: major, CR: critical, COC- certificate of conformance

Sampling & Acceptance Criteria

Criteria	Manufacturer experience prerequisite	Condition	Testing procedure	Remarks
Samples as per relevant IS from every size/ type of cable in the offered lot shall be tested for Tensile Strength & Elongation (before ageing). The values will be compared with corresponding values mentioned in the Type Test report accepted by NTPC. These values of Tensile Strength & Elongation (before ageing) should be within +/ - 15% tolerance (final values should be more than the minimum values indicated in relevant standard) of the Type Test report	In case of Manufacturers/ Supplier who have supplied cables in the past through Corporate Centre / Regional offices	In case of sizes/ type which meet the criteria	1 Sample per size/ type out of sizes which have met the criteria, will be put on accelerated ageing test (refer IRS specification no. IRS: S-63/2007 Rev 3.0). The samples shall be aged in air oven at temperature of 130°c+/- 2°c for 5 hours. 1 Sample of XLPE insulation per type of cables offered which have met the criteria, will be put on ageing test as per IS 7098 -II . After wards the samples shall be tested for Tensile Strength & Elongation. Acceptance norms shall be as per relevant IS. **This test shall be witnessed by NTPC.**	In case the samples do not meet the requirement in accelerated ageing test **then 1 sample of that size/ type will be put on ageing test as per IS.**
		In case of size /type which do not meet the criteria	Particular size/ type will be put on ageing test as per IS. **This test shall be witnessed by NTPC.**	----

LEGEND:- *RECORDS, IDENTIFIED WITH "TICK" UNDER COLUMN "D" SHALL BE ESSENTIALLY INCLUDED BY SUPPLIER IN QA DOCUMENTATION.
-M:MANUFACTURER/SUPPLIER, C:MAIN SUPPLIER, N:NTPC, P:PERFORM W:WITNESS,V:VERFICATION AS APPROPRIATE, CHP: NTPC SHALL IDENTIFY IN COLUMN "N" AS "W"

Sl. No	Component & Operations	Characteristics	Class	Type of check	Quantum of check M	Quantum of check C/N	Reference Document	Acceptance Norms	Record Format	Agency D*	Agency M	Agency C	Agency N	Remarks
1	2	3	4	5	6		7	8	9	10				11
				In case of Manufacturers/ Supplier WHO HAVE NOT SUPPLIED cables in the past through Corporate Centre / Regional offices	In case of size /type which meet the criteria		1 Sample per sizes/ type out of all sizes which have met the criteria, will be put on aging test and **witnessed by NTPC as per relevant IS**							----
					In case of size/ type which do not meet the criteria		Particular size / type will be put on ageing test as per IS. **This test shall be witnessed by NTPC**							----

LEGEND:- *RECORDS, IDENTIFIED WITH "TICK" UNDER COLUMN "D" SHALL BE ESSENTIALLY INCLUDED BY SUPPLIER IN QA DOCUMENTATION.
M:MANUFACTURER/SUPPLIER, C:MAIN SUPPLIER, N:NTPC, P:PERFORM W:WITNESS,V:VERFICATION AS APPROPRIATE, CHP: NTPC SHALL IDENTIFY IN COLUMN "N" AS "W"

NTPC	ITEM : LIGHTING FIXTURES (Conventional and LED type)	STANDARD QUALITY PLAN	QP.NO:0000-999-QOE-S-062	REVIEWED BY	APPROVED BY
		CONFORMING TO CODE : As applicable	Rev No.: 00	SWAPNESWAR MISHRA	R.M.Jain
			Date: 02/11/15	VIKRAM TALWAR	
			VALID UPTO: 01/11/18	SUNIL MALANI	

Sl No	COMPONENT & OPERATIONS		CHARACTERISTICS / INSTRUMENTS	CLASS OF CHECK	TYPE OF CHECK	QUANTUM OF CHECK		REFERENCE DOCUMENT	ACCEPTANCE NORMS	FORMAT OF RECORD					REMARKS
						6 M	6 C/N					M	C	N	
1	2		3	4	5			7	8	9	0*	**	10		11
	Note: 1): Lighting fixtures supplier to ensure that constructional features of the lighting fixture (conventional & LED type) are as per NTPC specification requirements 2): Lighting fixture supplier to maintain all quality control records identified in this QP whether it is identified for NTPC verification or witness or not.														
	Conventional type Lighting Fixture														
A	**Bought out items / in-process checks**														
1	Lamps		Make, rating & type	Major	Visual	1 sample per type	1 sample per type	NTPC specification requirements for rating & type, Make to be BIS approved with CML number	NTPC specification requirements for rating & type, Make to be BIS approved with CML number			V	-	-	
1.1	Electronic Ballast (if applicable)	a	Certificate of compliance	Major	Visual	-	-	NTPC specification requirements	Certificate of compliance by ballast manufacturer / lighting fixture supplier that ballst meets all NTPC specification requirements	Certificate of compliance		V	-	-	
		b	THD and pf check	Major	Electrical	Mnfr std.	-	NTPC specification requirements	THD < =10% , pf >= 0.9 for FH type and pf >= 0.95 for other type of floresceent lighting fixtures	Inspection report		P/V *	-	-	P/V * - means test will be performed either by lighting fi supplier or their sub-vendor a Verified by lighting fixture su
1.2	Castings		Freedom from defects	Major	Visual	Mnfr std.	-	NTPC specification requirements	Castings shall be free from any defects such as blow holes, surface blisters, cracks and cavities etc.	Inspection report		P/V *	-	-	P/V * - means test will be performed either by lighting fi supplier or their sub-vendor a Verified by lighting fixture su
1.3	Sheet metal forming and fabrication		Freedom from defects	Major	Visual	Mnfr std.	-	NTPC specification requirements	sheet metal fabrication / forming etc should be as per manufacturer drgs	Inspection report		P/V *	-	-	P/V * - means test will be performed either by lighting fi supplier or their sub-vendor a Verified by lighting fixture su
1.4	Pre-treatment and powder coating		Pre-treatment process checks, Powder coating finish, thickness, uniformity of coating and adhesion	major	Visual, chemical & mech	Mnfr std.	-	Mnfr standard , NTPC specification requirements	Nominal coating thickness 50 microns or more	Inspection report		P/V *	-	-	P/V * - means test will be performed either by lighting fi supplier or their sub-vendor a Verified by lighting fixture su

LEGEND: * RECORDS, INDENTIFIED WITH "TICK" (√) SHALL BE ESSENTIALLY INCLUDED BY SUPPLIER IN QA DOCUMENTATION. ** M: MANUFACTURER/ SUB-SUPPLIER: C: MAIN SUPPLIER, N: NT
P: PERFORM W: WITNESS AND V: VERIFICATION. CHP: CUSTOMER HOLD POINT BY NTPC SHALL BE IDENTIFIED UNDER AGENCY COLUMN "N" AS 'W'.

NTPC	ITEM : LIGHTING FIXTURES (Conventional and LED type)	STANDARD QUALITY PLAN	QP.NO:0000-999-QOE-S-062	REVIEWED BY	APPROVED BY
		CONFORMING TO CODE : As applicable	Rev No.: 00	SWAPNESWAR MISHRA	K.N.Jain
			Date: 02/11/15	VIKRAM TALWAR	
			VALID UPTO: 01/11/18	SUNIL MALAN	

Sl No	COMPONENT & OPERATIONS		CHARACTERISTICS / INSTRUMENTS	CLASS OF CHECK	TYPE OF CHECK	QUANTUM OF CHECK 6 M	QUANTUM OF CHECK 6 C/N	REFERENCE DOCUMENT	ACCEPTANCE NORMS	FORMAT OF RECORD	D*	M	C	N	REMARKS
	2		3	4	5			7	8	9		**	10		11
3	**Acceptance Tests on conventional Lighting fixture**	a	Details of lot offered and Certificate of compliance that lighting fixture supplier has inspected the offered lot as per their own standard	Major	Visual	-	-	lighting fixture supplier to submit the details of lot offered for NTPC inspection (Type of lighting fixtures, their batch number, sub-vendor name, quantity)	COC	List		P	V	V	The list may be used by NTPC for sample selection
		b	Lamp make	Major	Visual	100%	100%	Make to be BIS approved with CML number	Make to be BIS approved with CML number	Certificate of compliance		V	V	V	
		c	Constructional features including: Internal wiring, terminal block, earthing terminal, safety chain (if applicable)	Major	Visual	1 sample per type	1 sample per type	NTPC specification and NTPC approved data sheet/drg.	NTPC specification and approved data sheet/drg.	Inspection report		P	W	W	
		d	Electronic Ballast (if applicable for offered lighting fixtures) THD and pf check	Major	Electrical	1 sample per type	1 sample per type	NTPC specification	THD <=10% , pf >= 0.9 for FH type and pf >= 0.95 for other type of floresceent lighting fixtures	Inspection report		P	W	W	At lighting fixture supplier test lab
		e	Resistance to moisture test in case of lighting fixtures having IP X4 and above rating	Major	Mechanical	1 sample per type	1 sample per type	NTPC approved data Sheet	IS 10322 Part 1	Inspection report		P	W	W	
		f	Resistance to dust (applicable if IP5X and above)	Major	optical	Mnfr std.	Mnfr std	NTPC approved Data sheet and accepted type test reports	Certificate of compliance	Certificate of compliance		P/V *	V	V	P/V * - means test will be performed either by lighting fixture supplier or their sub-vendor and Verified by lighting fixture supplier
		f	Photometry check	Major	optical	Mnfr std.	Mnfr std	NTPC accepted type test reports	Certificate of compliance for the batch : that offered lighting fixture LOR is not be less than 90% (refer IS 16107) with reference to type test reports	Certificate of compliance		P/V *	V	V	P/V * - means test will be performed either by lighting fixture supplier or their sub-vendor and Verified by lighting fixture supplier
		g	Dimensions	Major	Visual	1 sample per type	1 sample per type	NTPC specification and approved data sheet/drg.	NTPC specification and approved data sheet/drg.	Inspection report		P	W	W	
		h	HV & IR test	Major	Visual	#	#	IS 10322 part 1	IS 10322 part 1	Inspection report		P	W	W	# As per Table 1 (inspection Level S2) and Table 2C AQL 2.5 of IS 2500

LEGEND: * RECORDS, INDENTIFIED WITH "TICK" (√) SHALL BE ESSENTIALLY INCLUDED BY SUPPLIER IN QA DOCUMENTATION. ** M: MANUFACTURER/ SUB-SUPPLIER: C: MAIN SUPPLIER, N: NTPC
P: PERFORM W: WITNESS AND V: VERIFICATION. CHP: CUSTOMER HOLD POINT BY NTPC SHALL BE IDENTIFIED UNDER AGENCY COLUMN "N" AS 'W'.

NTPC	ITEM : LIGHTING FIXTURES (Conventional and LED type)	STANDARD QUALITY PLAN	QP.NO:0000-999-QOE-S-062	REVIEWED BY	APPROVED BY
		CONFORMING TO CODE : As applicable	Rev No.: 00	SWAPNESWAR MISHRA	K.M.Jain
			Date: 02/11/15	VIKRAM TALWAR	
			VALID UPTO: 01/11/18	SUNIL MALANI	

No	COMPONENT & OPERATIONS		CHARACTERISTICS / INSTRUMENTS	CLASS OF CHECK	TYPE OF CHECK	QUANTUM OF CHECK 6 M	QUANTUM OF CHECK 6 C/N	REFERENCE DOCUMENT	ACCEPTANCE NORMS	FORMAT OF RECORD	D*	M	C	N	REMARKS
	2		3	4	5			7	8	9		**	10		11
	LED type Lighting fixture														
	Bought out items / in-process checks														
	LED Chip		LED chip efficacy	Major	Visual	Mnfr Std.	Mnfr Std.	NTPC Spec/ Appd. Data sheet/ LM 80 report	NTPC Spec/ Appd Data sheet	LM 80 report		V	V	V	At the time of final inspection
			LED chip CRI and CCT	Major	Visual	Mnfr Std.	Mnfr Std.	NTPC Spec/ Appd. Data sheet/ LM 80 report	NTPC Spec/ Appd Data sheet	LM 80 report		V	V	V	At the time of final inspection
			Reported TM21 (L80) lifetime of LED chip	Major	Visual	Mnfr Std.	Mnfr Std.	NTPC Spec/ Appd. Data sheet/ LM 80 report	NTPC Spec/ Appd Data sheet	LM 80 report		V	V	V	At the time of final inspection
.1	LED Driver	a	Compatibility with LED module/chip, controls & protection features as per NTPC spec	Major	Visual	-	-	NTPC spec requirements	Certificate of compliance by LED driver manufacturer / lighting fixture supplier that driver meets all NTPC specification requirements	Certificate of compliance		V	V	V	
		b	THD and pf check	Major	Electrical	Mnfr std.	-	NTPC specification	THD < 10% and pf >= 0.9	Inspection report		P/V *	-	-	P/V * - means test will be performed either by lighting fixture supplier or their sub-vendor and Verified by lighting fixture supplier
	Castings		Freedom from defects	Major	Visual	Mnfr std.		NTPC specification requirements	Castings shall be free from any defects such as blow holes, surface blisters, cracks and cavities etc.	Inspection report		P/V *	-	-	P/V * - means test will be performed either by lighting fixture supplier or their sub-vendor and Verified by lighting fixture supplier
	Sheet metal forming and fabrication		Freedom from defects	Major	Visual	Mnfr std.	-	NTPC specification requirements	sheet metal fabriaction / forming etc should be as per manufacturer standards and good engg practices	Inspection report		P/V *	-	-	P/V * - means test will be performed either by lighting fixture supplier or their sub-vendor and Verified by lighting fixture supplier
	Pre-treatment and powder coating		Pre-treatment process checks, Powder coating finish, thickness, uniformity of coating and adhesion	major	Visual, chemical & mech	Mnfr std.	-	Mnfr standard , NTPC specification requirements	Nominal coating thickness 50 microns or more	Inspection report		P/V *	-	-	P/V * - means test will be performed either by lighting fixture supplier or their sub-vendor and Verified by lighting fixture supplier

LEGEND: * RECORDS, INDENTIFIED WITH "TICK" (√) SHALL BE ESSENTIALLY INCLUDED BY SUPPLIER IN QA DOCUMENTATION. ** M: MANUFACTURER / SUB-SUPPLIER: C: MAIN SUPPLIER, N: NTPC
P: PERFORM W: WITNESS AND V: VERIFICATION. CHP: CUSTOMER HOLD POINT BY NTPC SHALL BE IDENTIFIED UNDER AGENCY COLUMN "N" AS 'W'.

NTPC	ITEM : LIGHTING FIXTURES (Conventional and LED type)	STANDARD QUALITY PLAN	QP.NO:0000-999-QOE-S-062	REVIEWED BY	APPROVED BY
		CONFORMING TO CODE : As applicable	Rev No.: 00	SWAPNESWAR MISHRA	
			Date: 02/11/15	VIKRAM TALWAR	
			VALID UPTO: 01/11/18	SUNIL MALANI	

Sl No	COMPONENT & OPERATIONS		CHARACTERISTICS / INSTRUMENTS	CLASS OF CHECK	TYPE OF CHECK	QUANTUM OF CHECK 6 M	QUANTUM OF CHECK 6 C/N	REFERENCE DOCUMENT	ACCEPTANCE NORMS	FORMAT OF RECORD		M	C	N	REMARKS
1	2		3	4	5			7	8	9	D*	**	10		11
B	Acceptance Tests on LED Lighting fixture	a	Details of lot offered and Certificate of compliance that lighting fixture supplier has inspected the offered lot as per their own standard	Major	Visual	-	-	lighting fixture supplier to submit the details of lot offered for NTPC inspection (Type of lighting fixtures, their batch number, sub-vendor name, quantity)	-	List		P	V	V	The list may be used by NTPC for sample selection
		b	LED chip make	Major	Visual	-	-	NTPC accepted type test reports (LM80/LM79) report	Certificate of compliance	Certificate of compliance		V	V	V	
		c	Constructional features including: Internal wiring, terminal block, earthing terminal, safety chain (if applicable)	Major	Visual	1 sample per type	1 sample per type	NTPC specification and NTPC approved data sheet/drg.	NTPC specification and approved data sheet/drg.	Inspection report		P	W	W	
		e	Resistance to moisture test in case of lighting fixtures having IP X4 and above rating	Major	Mechanical	1 sample per type	1 sample per type	NTPC approved data Sheet	IS 10322 Part I	Inspection report		P	W	W	
		f	Resistance to dust (applicable if IP5X and above)	Major	optical	Mnfr std.	Mnfr std	NTPC accepted type test reports	Certificate of compliance	Certificate of compliance		P/V *	V	V	P/V * - means test will be performed either by lighting fixture supplier or their sub-vendor and Verified by lighting fixture supplier
		f	Photometry check	Major	optical	Mnfr std.	Mnfr std	NTPC accepted type test reports, LM 79, IS 16106, IS 16107	Certificate of compliance for the batch; that offered lighting fixture LOR and lighting fixture efficacy is not be less than 90% (refer IS 16107) with reference to type test reports	Certificate of compliance		P/V *	V	V	P/V * - means test will be performed either by lighting fixture supplier or their sub-vendor and Verified by lighting fixture supplier

LEGEND: * RECORDS, INDENTIFIED WITH "TICK" (V) SHALL BE ESSENTIALLY INCLUDED BY SUPPLIER IN QA DOCUMENTATION. ** M: MANUFACTURER / SUB-SUPPLIER: C: MAIN SUPPLIER, N: NTPC
P: PERFORM W: WITNESS AND V: VERIFICATION. CHP: CUSTOMER HOLD POINT BY NTPC SHALL BE IDENTIFIED UNDER AGENCY COLUMN "N" AS 'W'.

NTPC		ITEM : LIGHTING FIXTURES (Conventional and LED type)		STANDARD QUALITY PLAN				QP.NO:0000-999-QOE-S-062	REVIEWED BY					APPROVED BY	
				CONFORMING TO CODE : As applicable				Rev No.: 00	SWAPNESWAR MISHRA						
								Date: 02/11/15	VIKRAM TALWAR						
								VALID UPTO: 01/11/18	SUNIL MALANI						
SI No	COMPONENT & OPERATIONS		CHARACTERISTICS / INSTRUMENTS	CLASS OF CHECK	TYPE OF CHECK	QUANTUM OF CHECK		REFERENCE DOCUMENT	ACCEPTANCE NORMS	FORMAT OF RECORD					REMARKS
						6 M	6 C/N					M	C	N	
1	2		3	4	5			7	8	9	0*	**	10		11
		g	Dimensions	Major	Visual	1 sample per type	1 sample per type	NTPC specification and approved data sheet/drg.	NTPC specification and approved data sheet/drg.	Inspection report		P	W	W	
		i	LED driver: THD and pf check	Major	Electrical	1 sample per type	1 sample per type	NTPC specification	THD < 10% and pf >= 0.9	Inspection report		P	W	W	At lighting fixture supplier test lab
		j	LED driver: Precision current control check	Major	Electrical	1 sample per type	1 sample per type	NTPC specification	NTPC specification and NTPC approved data sheet	Inspection report		P	W	W	
		k	LED driver: Open circuit protection simulation check	Major	Electrical	1 sample per type	1 sample per type	NTPC specification	NTPC specification and NTPC approved data sheet	Inspection report		P	W	W	
		l	LED driver: Short circuit protection simulation check	Major	Electrical	1 sample per type	1 sample per type	NTPC specification	NTPC specification and NTPC approved data sheet	Inspection report		P	W	W	
		m	LED driver: Over temperature protection simulation check	Major	Electrical	1 sample per type	1 sample per type	NTPC specification	NTPC specification and NTPC approved data sheet	Inspection report		P	W	W	
		n	LED driver: Overload protection simulation check	Major	Electrical	1 sample per type	1 sample per type	NTPC specification	NTPC specification and NTPC approved data sheet	Inspection report		P	W	W	
		o	LED driver: Surge protection compliance check	Major	Electrical	-	-	NTPC specification	Certificate of compliance that surge protection is provided	Certificate of compliance		V	V	V	

LEGEND: * RECORDS, INDENTIFIED WITH "TICK" (√) SHALL BE ESSENTIALLY INCLUDED BY SUPPLIER IN QA DOCUMENTATION. ** M: MANUFACTURER / SUB-SUPPLIER: C: MAIN SUPPLIER, N: NTPC
P: PERFORM W: WITNESS AND V: VERIFICATION. CHP: CUSTOMER HOLD POINT BY NTPC SHALL BE IDENTIFIED UNDER AGENCY COLUMN "N" AS 'W'.

Format No.: QS-01-QAI-P-10/F3-R0 Engg. Div./QA&I

Item: 1.1 KV Power (XLPE & PVC) Insulated FRLS cables	STANDARD QUALITY PLAN (CONFORMING TO CODE: IS 1554 PART 1 , IS 7098 Part-I AND NTPC TECHNICAL SPECIFICATION)	QP. NO 0000-999- QOE- S-041 REV-00 DATE 03-02-12 Page 1 of 11 VALID UP TO: 02-02-15	REVIEWED BY INDERJIT SINGH VIKRAM TALWAR RAJEEV GARG	APPROVED BY A.K. Garg

Sl. No	Component & Operations	Characteristics	Class	Type of check	Quantum of check M	Quantum of check C/N	Reference Document	Acceptance Norms	Record Format	Agency D*	Agency M	Agency C	Agency N	Remarks
1	2	3	4	5	6		7	8	9	10				11
Instructions: 1) Cable manufacturer to maintain records to show co- relation of raw materials to finished cables i,e raw material batch/ lot no. should be traceable to the cable drum. 2) Cable manufacturer to maintain all quality control records identified as per all QP stages enumerated below whether it is identified for NTPC verification or witness or not														
A	Raw material/ Brought out Items													
1.01	Aluminum	1.Make	MA	Verify	100%	--	MANUFACTURER APPROVED SOURCES	MANUFACTURER APPROVED SOURCES	QCR		V	--	--	
		2. Resistivity	MA	Elect	As per Cable Mnfr Std.	--	IS5082	IS5082	-do--		P	--	--	
1.02	PVC / XLPE/compound for insulation	1. Make	MA	Verify	--do--	100%	MANUFACTURER APPROVED SOURCES	MANUFACTURER APPROVED SOURCES	--do--		V	V	--	
		2. Type/ Grade	MA	Verify	100%	100%	NTPC ADS	NTPC ADS	--do--		V	V	V	
		3. All acceptance test as per manufacturer norms including thermal stability test for PVC insulation	MA	Verify	As per manufacturer norms	As per manufacturer norms	NTPC ADS	NTPC ADS	--do--		V	V	V	Refer note 1
1.03	PVC Compound for Inner sheath	1. Make	MA	Verify	--do--	--do--	MANUFACTURER APPROVED sources	MANUFACTURER APPROVED sources	--do--		V	V	V	
		2. Type/ Grade	MA	Verify	--do--	--do--	NTPC ADS	NTPC ADS	--do--		V	V	V	
1.04	Steel wire / Formed Wire (As applicable)	1. Make	MA	Verify	--do--	--do--	MANUFACTURER APPROVED sources	MANUFACTURER APPROVED sources	--do--		V	V	V	
		2. Dimension	MA	Meas	1 sample from each size / lot	--	NTPC APPROVED DATA SHEET & IS 3975	NTPC APPROVED DATA SHEET & IS 3975	--do--		P	--	--	
		3. All acceptance tests as per IS 3975	MA	Verify	As per IS 3975	--	IS 3975	IS 3975	Supplier TC		V	V	--	
1.05	PVC compound for Sheath	1. Make	MA	Verify	As per manufacturer norms	100%	MANUFACTURER APPROVED sources	MANUFACTURER APPROVED sources	QCR		V	V	--	
		2. Type / Grade	MA	Verify	100%	100%	NTPC ADS	NTPC ADS	QCR		V	V	V	
		3. All acceptance test as per manufacturer norms	MA	Verify	As per manufacturer norms	As per manufacturer norms	NTPC ADS	NTPC ADS	QCR		V	V	V	Refer note 1

LEGEND:- *RECORDS, IDENTIFIED WITH "TICK" UNDER COLUMN "D" SHALL BE ESSENTIALLY INCLUDED BY SUPPLIER IN QA DOCUMENTATION.
-M:MANUFACTURER/SUPPLIER, C:MAIN SUPPLIER, N:NTPC, P:PERFORM W:WITNESS,V:VERFICATION AS APPROPRIATE, CHP: NTPC SHALL IDENTIFY IN COLUMN "N" AS "W"

NTPC	Item: 1.1 KV Power (XLPE & PVC) Insulated FRLS cables	STANDARD QUALITY PLAN (CONFORMING TO CODE. IS 1554 PART 1 , IS 7098 Part-I AND NTPC TECHNICAL SPECIFICATION)	QP NO 0000-999- QOE- S-041 REV-00 DATE : 03-02-12 Page 2 of 11 VALID UP TO 02-02-15	REVIEWED BY INDERJIT SINGH VIKRAM TALWAR RAJEEV GARG	APPROVED BY A.K. Garg

Sl. No	Component & Operations	Characteristics	Class	Type of check	Quantum of check M	Quantum of check C/N	Reference Document	Acceptance Norms	Record Format	Agency D*	Agency M	Agency C	Agency N	Remarks
1	2	3	4	5	6		7	8	9	10				11
		4. Thermal Stability	MA	Chem	One sample / Batch	--	NTPC ADS	NTPC ADS	QCR		P	--	--	
		5. Oxygen Index	MA	Chem	--do--	--	NTPC ADS/ IS 10810 Part 58	NTPC ADS/ IS 10810 Part 58	--do--		P	--	--	
		6. Acid Gas Emission	MA	Chem	One sample / Batch	--	NTPC ADS / IEC60754	NTPC ADS / IEC60754	QCR		P	--	--	
1.06	Wooden Drum	1. Dimension	MI	Meas	Manuf. Std.	--	IS 10418	IS10418	--do--		P	--	--	
		2. Anti termite treatment	MI	Chem	Cable manuf. std	--	CABLE MANUF. STD	CABLE MANUF. STD.	COC		V	V	V	COC from drum manuf
1.07	Steel Drum	1. Dimension	MI	Meas	--do--	--	--do--	--do--	QCR		P	--	--	
		2. Surface finish	MI	Meas	--do--	--	--do--	--do--	--do-		P	--	--	
B	Process & Stage Inspection													
2.01	Wire Drawing	1 Surface finish	MA	Visual	One sample/Setting of each size	--	SHOULD BE SMOOTH & FREE FROM SCRATCHES	SHOULD BE SMOOTH & FREE FROM SCRATCHES	QCR		P	--	--	
		2. Wire Diameter	MA	Meas	--do--	--	NTPC ADS	NTPC ADS	--do-		P	--	--	
		3. Tensile test	CR	Mech	--do--	--do--	--do--	--do--	--do--		P	V	V	Refer Sl. No 3.03(iii)
		4. Wrapping test	CR	Mech	--do--	--do--	--do--	--do--	--do--		P	V	V	--do--
2.02	Bunching / stranding	1. No. of wires	MA	Meas	--do--	--	NTPC ADS	NTPC ADS	--do-		P	--	--	
		2.Dia of wire	MA	Meas	-do--	--	--do--	--do--	--do--		P	--	--	
		3. Dimension of Conductor	MA	Meas	--do--		--do--	--do--	--do--		P	--	--	
		4.Direction of lay	MA	Visual	--do--	---	--do-	--do--	--do--		P	--	--	
		5 Records of strand breakage / welding during conductor stranding	MA	Verify	--do--	--	IS 8130	IS8130	--do--		P	--	--	
		6 Surface finish	MA	Visual	--do--	-	--do--	--do--	--do--		P	--	--	
		7. DC Resistance	CR	Meas	--do--	-	IS8130/NTPC ADS	IS8130/ NTPC ADS	--do--		P	--	--	
2.03	Insulation extrusion	1. Surface finish	MA	Visual	One sample/Setting of each size	-	NTPC spec	SHOULD BE SMOOTH. NO POROSITY IS PERMITTED	QCR		P	--	--	XLPE/ PVC compound shall be preferably loaded in to extruder by suction method

LEGEND:- *RECORDS, IDENTIFIED WITH "TICK" UNDER COLUMN "D" SHALL BE ESSENTIALLY INCLUDED BY SUPPLIER IN QA DOCUMENTATION.
-M:MANUFACTURER/SUPPLIER, C:MAIN SUPPLIER, N:NTPC, P:PERFORM W:WITNESS,V:VERFICATION AS APPROPRIATE, CHP: NTPC SHALL IDENTIFY IN COLUMN "N" AS "W"

NTPC	Item: 1.1 KV Power (XLPE & PVC) Insulated FRLS cables	STANDARD QUALITY PLAN (CONFORMING TO CODE: IS 1554 PART I , IS 7098 Part-I AND NTPC TECHNICAL SPECIFICATION)	QP NO 0000-999- QOE- S-041 REV-00 DATE : 03-02-12 Page 3 of 11 VALID UP TO: 02-02-15	REVIEWED BY INDERJIT SINGH VIKRAM TALWAR RAJEEV GARG	APPROVED BY

Sl. No	Component & Operations	Characteristics	Class	Type of check	Quantum of check M	Quantum of check C/N	Reference Document	Acceptance Norms	Record Format	Agency D*	Agency M	Agency C	Agency N	Remarks
1	2	3	4	5	6		7	8	9	10				11
		2.Colour of cores	MA	Visual	One sample/Setting of each size	-	NTPC ADS	NTPC ADS	QCR		P	--	--	
		3.Thickness	CR	Meas	--do--	--	NTPC ADS	NTPC ADS	--do--		P	--	--	
		4.Spark Test	CR	Elect	100%	100%	CABLE MANUF. STD.	No FAILURE	--do --		P	V	V	1.Spark test failure record is to be verified. 2.Core repairing not permitted
		5. Hot Set	CR	Mech	One sample/Setting of each size	--	IS 7098- Part I	IS 7098- Part I	--do--		P	--	--	Sample is to be taken from both top & bottom end
2.04	Laying up	1. Core sequence	MA	Visual	--do--	--	IS 1554 (Part I) & IS 7098- Part I	IS 1554 (Part I) & IS 7098- Part I	--do--		P	--	--	
		2. Direction of lay	MA	Visual	--do--	--	-do-	--do--	--do--		P	--	--	
		3. Dia over laid up core	MA	Meas	--do--	--	NTPC ADS	NTPC ADS	--do--		P	--	--	
2.05	Inner Sheath	1.Colour	MA	Visual	-do--	-	--do--	--do--	--do--		P	--	--	
		2. Surface Finish	MA	Visual	100%	-	NTPC SPECIFICATION	FISH EYE, BLOW HOLE NOT PERMITTED	--do--		P	--	-	
		3.Thickness	MA	Meas	One sample/Setting of each size	-	NTPC ADS	NTPC ADS	--do--		P	--	--	
		4.Dia over inner sheath	MI	Meas	--do--.	-	--do--	--do--	--do--		P	--	--	
2.06	Armouring (As Applicable)	1.Dimension	MA	Meas	--do--	-	--do--	--do--	--do--		P	--	--	
		2.No. of wires / strip	MA	Meas.	--do--	-	--do--	--do--	--do--		P	--	--	
		3. Direction of lay	MA	Visual	--do--	--	IS 1554 (Part I) & IS 7098- Part I	IS 1554 (Part I) & IS 7098- Part I	QCR		P	--	--	

LEGEND:- *RECORDS, IDENTIFIED WITH "TICK" UNDER COLUMN "D" SHALL BE ESSENTIALLY INCLUDED BY SUPPLIER IN QA DOCUMENTATION.
-M:MANUFACTURER/SUPPLIER, C:MAIN SUPPLIER, N:NTPC, P:PERFORM W:WITNESS,V:VERFICATION AS APPROPRIATE, CHP: NTPC SHALL IDENTIFY IN COLUMN "N" AS "W"

NTPC	Item: 1.1 KV Power (XLPE & PVC) Insulated FRLS cables	STANDARD QUALITY PLAN (CONFORMING TO CODE: IS 1554 PART 1 , IS 7098 Part-I AND NTPC TECHNICAL SPECIFICATION)	QP NO. 0000-999- QOE- S-041 REV-00 DATE : 03-02-12 Page 4 of 11 VALID UP TO: 02-02-15	REVIEWED BY INDERJIT SINGH VIKRAM TALWAR RAJEEV GARG	APPROVED BY A.K. Garg

Sl. No	Component & Operations	Characteristics	Class	Type of check	Quantum of check M	Quantum of check C/ N	Reference Document	Acceptance Norms	Record Format	Agency C.. D*	Agency C.. M	Agency C.. C	Agency C.. N	Remarks
1	2	3	4	5	6		7	8	9	10				11
		4 Coverage & Quality of armouring	MA	Meas	100%	--	Min. area of coverage of armouring shall be 90%. The gap between amour wires / formed wires shall not exceed one amour wire/ formed wire space & there shall be no cross over/ over riding of amour wire / formed wire. Zn rich paint shall be applied on amour joint surface of G.S Wire /formed wire The breaking load of amour wire joint shall not be less than 95% of that amour wire / formed wire. (As per NTPC specification)		QCR		P	--	--	
		5 Dia over armouring	MA	Meas.	One sample/Setting of each size	--	NTPC ADS		--do--		P	--	--	--
2.07	Outer Sheath	1. Surface finish	MA	Visual	100%	--	Pimple, Fish Eye, Burnt particles, Blow Hole not permitted. Repairing on outer sheath not permitted. (As per NTPC specification)		--do--		P	--	--	PVC FRLS compound shall be preferably loaded in to extruder by suction method
		2.Colour of sheath	MA	Visual	One sample/Setting of each size	--	NTPC ADS	NTPC ADS	--do--		P	--	--	
		3. Dia over outer sheath	MA	Meas	--do--	--	NTPC ADS	NTPC ADS	--do--		P	--	--	
		4.Thickness of outer sheath	CR	Meas	--do--	-	--do--	--do--	--do--		P	--	--	
		5. Embossing quality	MA	Visual	100%	-	Drum no , IS1554-1 / IS7098-1,Cable size, Voltage grade & Words "FRLS" at every 5 meter is to be embossed. Embossing shall be automatic, in line & marking shall be legible & indelible. (As per NTPC specification)		--do--		P	--	--	Drum no. on cable may be embossed/printed
		6. Sequencial marking	MA	Visual	Full length	--	Sequencial marking of length of cable in meter at every one meter is to be embossed / printed. Embossing / printing shall be progressive, automatic, in line & marking shall be legible & indelible. (A s per NTPC specification)		--do--		P	--	--	
C	Finished Cables													
3.01	Type test reports clearance from NTPC Engineering	All type tests as per NTPC specification	CR	Doc.	100%	100%	NTPC SPECIFICATION / NTPC ADS / IS 1554 (Part1) & IS 7098-Part 1	NTPC SPECIFICATION / NTPC ADS / IS 1554 (Part1) & IS 7098- Part 1	--do--	✓	P	V	V	

LEGEND:- *RECORDS, IDENTIFIED WITH "TICK" UNDER COLUMN "D" SHALL BE ESSENTIALLY INCLUDED BY SUPPLIER IN QA DOCUMENTATION.
-M:MANUFACTURER/SUPPLIER, C:MAIN SUPPLIER, N:NTPC, P:PERFORM W:WITNESS,V:VERFICATION AS APPROPRIATE, CHP: NTPC SHALL IDENTIFY IN COLUMN "N" AS "W"

NTPC	Item: 1.1 KV Power (XLPE & PVC) Insulated FRLS cables	STANDARD QUALITY PLAN (CONFORMING TO CODE: IS 1554 PART 1 , IS 7098 Part-I AND NTPC TECHNICAL SPECIFICATION)	QP. NO 0000-999- QOE- S-041 REV-00 DATE . 03-02-12 Page 5 of 11 VALID UP TO: 02-02-15	REVIEWED BY INDERJIT SINGH VIKRAM TALWAR RAJEEV GARG	APPROVED BY A.K. Garg

Sl. No	Component & Operations	Characteristics	Class	Type of check	Quantum of check M	Quantum of check C/ N	Reference Document	Acceptance Norms	Record Format	Agency D*	Agency M	Agency C	Agency N	Remarks
1	2	3	4	5	6		7	8	9	10				11
3.02	Routine Tests	1.High Voltage test at room temperature	CR	Elect	100%	100%	NTPC ADS / IS 1554 (Part I) & IS 7098- Part I	NTPC ADS / IS 1554 (Part I) & IS 7098- Part I	Test certificate	✓	P	W	W	Refer note 2
		2.Conductor Resistance	CR	Elect	100%	100%	NTPC ADS / IS 1554 (Part I) & IS 7098- Part I	NTPC ADS / IS 1554 (Part I) & IS 7098- Part I	Test certificate	✓	P	W	W	Refer note 2
3.03	Acceptance Tests													
3.03 (i)	Construction of finished Cable:	1. OD of Cable	MA	Meas.	Each type & size of cables as per sampling plan of IS 1554 (Part I) & IS 7098- Part I		NTPC ADS	NTPC ADS	--do--	✓	P	W	W	
		2. Laying of core	CR	Visual	--do--		NTPC ADS / IS 1554 (Part I) & IS 7098- Part I	NTPC ADS / IS 1554 (Part I) & IS 7098- Part I	--do--	✓	P	W	W	
		3. Core identification	CR	Visual	--do--		--do--	--do--	--do--	✓	P	W	W	
		4. Colour of outer sheath	MA	Visual	--do--		NTPC ADS	NTPC ADS	--do--	✓	P	W	W	
		5. Inner sheath thickness	CR	Meas	- do -		--do--	--do--	--do--	✓	P	W	W	
		6. Inner sheath colour	MA	Visual	- do -		- do -	- do -	--do--	✓	P	W	W	
3.03 (ii)	Armour wires/ Formed wires (if applicable)	1.Dimensions	CR	Meas	--do--		NTPC ADS /IS1554(PartI)/IS3975	NTPC ADS /IS1554(PartI) /IS3975	--do--	✓	P	W	W	
		2. No. of wires/ formed wire	CR	Mech	-- do --		--do--	--do--	--do--	✓	P	W	W	
		3. Tensile test	CR	Mech	--do--		--do-	--do--	--do--	✓	P	W	W	
		4. Elongation test	CR	Mech	--do--		--do--	--do--	--do--	✓	P	W	W	
		5.Torsion test (for round wires only)	CR	Mech	--do--		--do--	--do--	--do--	✓	P	W	W	
		6. Wrapping test	CR	Mech	--do--		--do--	--do--	--do--	✓	P	W	W	
		7. Resistance test	CR	Mech	--do--		--do--	--do-	--do-	✓	P	W	W	

LEGEND:- *RECORDS, IDENTIFIED WITH "TICK" UNDER COLUMN "D" SHALL BE ESSENTIALLY INCLUDED BY SUPPLIER IN QA DOCUMENTATION.
-M:MANUFACTURER/SUPPLIER, C:MAIN SUPPLIER, N:NTPC, P:PERFORM W:WITNESS,V:VERFICATION AS APPROPRIATE, CHP: NTPC SHALL IDENTIFY IN COLUMN "N" AS "W"

NTPC	Item: 1.1 KV Power (XLPE & PVC) Insulated FRLS cables	STANDARD QUALITY PLAN (CONFORMING TO CODE IS 1554 PART 1 , IS 7098 Part-I AND NTPC TECHNICAL SPECIFICATION)	QP NO. 0000-999- QOE- S-041 REV-00 DATE . 03-02-12 Page 6 of 11 VALID UP TO 02-02-15	REVIEWED BY INDERJIT SINGH VIKRAM TALWAR RAJEEV GARG	APPROVED BY Ashok Garg

Sl No	Component & Operations	Characteristics	Class	Type of check	Quantum of check M	Quantum of check C/ N	Reference Document	Acceptance Norms	Record Format	Agency D*	Agency M	Agency C	Agency N	Remarks
1	2	3	4	5	6		7	8	9	10				11
		8.Mass of Zinc coating	CR	Meas	Each type & size of cables as per sampling plan of IS 1554 (Part 1) & IS 7098-Part I		NTPC ADS /IS1554(Partl)/IS3975	NTPC ADS /IS1554(Partl) /IS3975	Test certific ate	✓	P	W	W	
		9. Uniformity of Zinc Coating	CR	Chem.	--do-		--do--	--do-	--do-	✓	P	W	W	
		10.Adhesion test	CR	Mech	--do--		--do--	--do-	--do--	✓	P	W	W	
		11.Freedom from defects	CR	Visual	--do--		--do--	--do--	--do--	✓	P	W	W	
3.03 (iii)	Conductor													
		1.Resistance Test	CR	Elect	--do--		--do--	--do--	--do--	✓	P	W	W	
		2.Tensile test (For aluminum conductor only)	CR	Mech	Each type & size of cables as per sampling plan of IS IS 1554 (Part I)/7098(Part-1)		NTPC ADS/ IS 8130	NTPC ADS/ IS 8130	--do--	✓	P	W	W	Test report of manufacturer to be reviewed as per Sl. No 2.01 for Tensile test & wrapping test (for Aluminum) in case this test is not applicable for cable under inspection as per IS 8130 cl. 6.2
		3.Wrapping test (For aluminum conductor only)	CR	Mech	--do--		--do--	--do--	-do--	√	P	P	W	--do--

LEGEND:- *RECORDS, IDENTIFIED WITH "TICK" UNDER COLUMN "D" SHALL BE ESSENTIALLY INCLUDED BY SUPPLIER IN QA DOCUMENTATION.
-M:MANUFACTURER/SUPPLIER, C:MAIN SUPPLIER, N:NTPC, P:PERFORM W:WITNESS,V:VERFICATION AS APPROPRIATE, CHP: NTPC SHALL IDENTIFY IN COLUMN "N" AS "W"

NTPC	Item: 1.1 KV Power (XLPE & PVC) Insulated FRLS cables	STANDARD QUALITY PLAN (CONFORMING TO CODE: IS 1554 PART 1 , IS 7098 Part-I AND NTPC TECHNICAL SPECIFICATION)	QP NO. 0000-999- QOE- S-041 REV-00 DATE : 03-02-12 Page 7 of 11 VALID UP TO: 02-02-15	REVIEWED BY INDERJIT SINGH VIKRAM TALWAR RAJEEV GARG	APPROVED BY A.K. Garg

Sl. No	Component & Operations	Characteristics	Class	Type of check	Quantum of check M	Quantum of check C/N	Reference Document	Acceptance Norms	Record Format	Agencies D*	Agencies M	Agencies C	Agencies N	Remarks
1	2	3	4	5	6		7	8	9	10				11
3.03 (IV)	PVC/XLPE/ Insulation & PVC Sheath	1. Thickness of insulation & PVC Sheath	CR	Meas	Each type & size of cables as per sampling plan of IS IS 1554 (Part I)/IS7098(Part-I)		NTPC ADS/ IS 1554(PartI) & IS 7098 Part I	NTPC ADS/ IS 1554(PartI) & IS 7098 Part I	Test Certificate	√	P	W	W	
		2.Tensile strength & elongation at break of insulation & outer sheath (before ageing)	CR	Mech	Each type & size of cables as per sampling plan of IS IS 1554 (Part I)/IS7098(Part-I)		NTPC ADS/ IS 1554(PartI) & IS 7098 Part I	NTPC ADS/ IS 1554(PartI) & IS 7098 Part I	Test Certificate	✓	P	W	W	Refer Note 3 Also
		3.Tensile strength & elongation at break of insulation & outer sheath (after Ageing)	CR	Mech	Refer Note 3		--do--	--do--	--do--	✓	P	W	W	Refer Note 3 ath)
		4. Insulation resistance (Volume resistivity method)	CR	Elect	Each type & size of cables as per sampling plan of IS 1554 (Part I) & IS 7098-Part I		--do--	--do--	--do--	✓	P	W	W	
		5.High voltage test at room temperature	CR	Elect	Each type & size of cables as per sampling plan of IS 1554 (Part I) & IS 7098-Part I		--do--	--do--	--do--	✓	P	W	W	
		6..Hot Set test (for XLPE insulation only)	CR	Phy	--do--		--do--	-do--	--do-	√	P	W	W	
		7.Thermal stability on PVC Insulation and outer sheath	CR	Chem	One sample of each offered lot of all offered sizes		-do--	--do--	--do--	✓	P	W	W	

LEGEND:- *RECORDS, IDENTIFIED WITH "TICK" UNDER COLUMN "D" SHALL BE ESSENTIALLY INCLUDED BY SUPPLIER IN QA DOCUMENTATION.
-M:MANUFACTURER/SUPPLIER, C:MAIN SUPPLIER, N:NTPC, P:PERFORM W:WITNESS,V:VERFICATION AS APPROPRIATE, CHP: NTPC SHALL IDENTIFY IN COLUMN "N" AS "W"

NTPC	Item: 1.1 KV Power (XLPE & PVC) Insulated FRLS cables	STANDARD QUALITY PLAN (CONFORMING TO CODE: IS 1554 PART I , IS 7098 Part-I AND NTPC TECHNICAL SPECIFICATION)	QP. NO. 0000-999- QOE- S-041 REV-00 DATE 03-02-12 Page 8 of 11 VALID UP TO. 02-02-15	REVIEWED BY INDERJIT SINGH VIKRAM TALWAR RAJEEV GARG	APPROVED BY A.K. Gupta

Sl. No	Component & Operations	Characteristics	Class	Type of check	Quantum of check M	Quantum of check C/ N	Reference Document	Acceptance Norms	Record Format	Agency D*	Agency M	Agency C	Agency N	Remarks
1	2	3	4	5	6		7	8	9	10				11
		8.Oxygen index Test on outer sheath	CR	Chem	One sample of each offered lot of all offered sizes		NTPC ADS / IS10810 Part 58	NTPC A.D.S	--do-	✓	P	W	W	
		9.Smoke density rating test on outer sheath	CR	Chem	One sample of each offered lot of all offered sizes		NTPC ADS & ASTMD2843	NTPC ADS	-do--	✓	P	W	W	
		10.Acid gas generation test on outer sheath	CR	Chem	One sample of each offered lot of all offered sizes		NTPC ADS & IEC 60754-1	NTPC ADS	Test Certificate	✓	P	W	W	
		11.Flammability test on completed cable	CR	Chem	Refer Note 4	Refer Note 4	NTPC ADS & IEC 60332 Part-3 (Category-B)	NTPC ADS	--do--	✓	P	W	W	
		12.Surface finish & length measurement.	CR	Visual & Meas	One length of each size	One length of each size	(1) Drum no. (2) IS1554-1 /IS7098-1,Cable size, Voltage grade & Words " FRLS" at every 5 meter is to be embossed. Embossing shall be automatic, in line & marking shall be legible & indelible. (3) Sequential marking of length of cable in meter at every one meter is to be embossed / printed. Embossing / printing shall be progressive, automatic, in line & marking shall be legible & indelible	--do--	✓	P	W	W	Pimple, Fish Eye, Burnt particles, Blow Hole etc. not permitted. Repairing on outer sheath not permitted
		13. Sequence of cores armour coverage, gap between two consecutive armour/ formed wire	CR	Visual & Meas	One length of each size	One length of each size	Min. area of coverage of armouring shall be 90%. The gap between armour wires / formed wires shall not exceed one armour wire/ formed wire space & there shall be no cross over/ over riding of armour wire / formed wire. Zn rich paint shall be applied on armour joint surface of G S Wire /formed wire	--do-	√	P	W	W	
4	Packing	1. Sealing	MA	Visual	100%	100%	(1)IS1554(Part-I) & IS 7098-Part I (2) The surface of the drum and the outer most cable layer shall be covered with water proof cover. (3) Both the ends of cables shall be properly sealed with heat shrinkable PVC/ rubber caps secured by "U" nails.		QCR	✓	P	--	--	
4.01	Identification	NTPC Sealing	MA	Visual	100%	100%	Sealing shall be visible		QCR	√	P	V	V	

LEGEND:- *RECORDS, IDENTIFIED WITH "TICK" UNDER COLUMN "D" SHALL BE ESSENTIALLY INCLUDED BY SUPPLIER IN QA DOCUMENTATION.
-M:MANUFACTURER/SUPPLIER, C:MAIN SUPPLIER, N:NTPC, P:PERFORM W:WITNESS,V:VERFICATION AS APPROPRIATE, CHP: NTPC SHALL IDENTIFY IN COLUMN "N" AS "W"

NTPC	Item: 1.1 KV Power (XLPE & PVC) Insulated FRLS cables	STANDARD QUALITY PLAN (CONFORMING TO CODE: IS 1554 PART I , IS 7098 Part-I AND NTPC TECHNICAL SPECIFICATION)	QP. NO. 0000-999- QOE- S-041 REV-00 DATE : 03-02-12 Page 9 of 11 VALID UP TO. 02-02-15	REVIEWED BY INDERJIT SINGH VIKRAM TALWAR RAJEEV GARG	APPROVED BY A.K. Garg

Sl. No	Component & Operations	Characteristics	Class	Type of check	Quantum of check M	Quantum of check C/ N	Reference Document	Acceptance Norms	Record Format	Agency D*	Agency M	Agency C	Agency N	Remarks
1	2	3	4	5	6		7	8	9	10				11

Notes:

1)	If the compound manufacturer is carrying out Ageing test , test report of compound manufacturer is to be reviewed. If the compound manufacturer is not carrying out ageing test, then cable manufacturer is to carry out ageing test & test report is to be reviewed (quantum of ageing test sample shall be one sample /batch)
2)	(a) **In case of manufacturers / supplier who have supplied cables in the past through Corporate Centre/ Regional Offices** :- Routine Test of manufacturer internal test report are to be verified by NTPC at the time of final inspection. 2(b) **In case of manufacturers / supplier WHO HAVE NOT SUPPLIED cables in the past through Corporate Centre/ Regional Offices**,:- Routine Test are to be witnessed by Main Contractor & NTPC. This is in addition to manufacturer internal test report to be verified by NTPC at the time of final inspection.
3)	**Refer table on page 10 &11of 11 for Sampling & Acceptance criteria.**
4)	For PVC insulated LT power cable :- For cables with OD less than equal to 30 mm, any size of cable may be clubbed together. For cables where OD is more than 30 mm, clubbing to be done for cables having similar ODs. For XLPE insulated LT Power cable: Clubbing to be done for cables having similar ODs.
LEGEND:	**NTPC ADS: NTPC approved data sheet, QCR: quality control records of cable manufacturer, CABLE MANUF STD- cable manufacturer's internal plant standard, MI: minor, MA: major, CR: critical, COC- certificate of conformance**

LEGEND:- *RECORDS, IDENTIFIED WITH "TICK" UNDER COLUMN "D" SHALL BE ESSENTIALLY INCLUDED BY SUPPLIER IN QA DOCUMENTATION.
-M:MANUFACTURER/SUPPLIER, C:MAIN SUPPLIER, N:NTPC, P:PERFORM W:WITNESS,V:VERFICATION AS APPROPRIATE, CHP: NTPC SHALL IDENTIFY IN COLUMN "N" AS "W"

NTPC	Item: 1.1 KV Power (XLPE & PVC) Insulated FRLS cables	STANDARD QUALITY PLAN (CONFORMING TO CODE: IS 1554 PART 1, IS 7098 Part-1 AND NTPC TECHNICAL SPECIFICATION)	QP. NO. 0000-999- QOE- S-041 REV-00 DATE : 03-02-12 Page 10 of 11 VALID UP TO: 02-02-15	REVIEWED BY INDERJIT SINGH VIKRAM TALWAR RAJEEV GARG	APPROVED BY

Sl. No	Component & Operations	Characteristics	Class	Type of check	Quantum of check M	Quantum of check C/ N	Reference Document	Acceptance Norms	Record Format	Agency D*	Agency M	Agency C	Agency N	Remarks
1	2	3	4	5	6		7	8	9	10				11

Sampling & Acceptance Criteria

Criteria	Manufacturer experience prerequisite	Condition	Testing procedure	Remarks
Samples as per relevant IS from every size/ type of cable in the offered lot shall be tested for Tensile Strength & Elongation (before ageing). The values will be compared with corresponding values mentioned in the Type Test report accepted by NTPC. These values of Tensile Strength & Elongation (before ageing) should be within +/ - 15% tolerance (final values should be more than the minimum values indicated in relevant standard) of the Type Test report	In case of Manufacturers/ Supplier who have supplied cables in the past through Corporate Centre / Regional offices	In case of sizes/ type which meet the criteria	1 Sample of PVC insulation & outer sheath per type of cables offered which have met the criteria, will be put on accelerated ageing test (refer IRS specification no. IRS: S-63/2007 Rev 3.0). The samples shall be aged in air oven at temperature of 130°c+/- 2°c for 5 hours. 1 Sample of XLPE insulation per type of cables offered which have met the criteria, will be put on ageing test as per IS 7098. After wards the samples shall be tested for Tensile Strength & Elongation. Acceptance norms shall be as per relevant IS. **This test shall be witnessed by NTPC.**	In case the samples do not meet the requirement in accelerated ageing test **then 1 sample of that size/ type will be put on ageing test as per IS.**
		In case of size /type which do not meet the criteria	Particular size/ type will be put on ageing test as per IS. **This test shall be witnessed by NTPC.**	----

LEGEND:- *RECORDS, IDENTIFIED WITH "TICK" UNDER COLUMN "D" SHALL BE ESSENTIALLY INCLUDED BY SUPPLIER IN QA DOCUMENTATION.
-M:MANUFACTURER/SUPPLIER, C:MAIN SUPPLIER, N:NTPC, P:PERFORM W:WITNESS,V:VERFICATION AS APPROPRIATE, CHP: NTPC SHALL IDENTIFY IN COLUMN "N" AS "W"

NTPC	Item: 1.1 KV Power (XLPE & PVC) Insulated FRLS cables	STANDARD QUALITY PLAN (CONFORMING TO CODE: IS 1554 PART I , IS 7098 Part-I AND NTPC TECHNICAL SPECIFICATION)	QP NO 0000-999- QOE- S-041 REV-00 DATE : 03-02-12 Page 11 of 11 VALID UP TO: 02-02-15	REVIEWED BY INDERJIT SINGH VIKRAM TALWAR RAJEEV GARG	APPROVED BY Approved Dr. A.K. Garg

Sl No	Component & Operations	Characteristics	Class	Type of check	Quantum of check M	Quantum of check C/N	Reference Document	Acceptance Norms	Record Format	Agency D*	Agency M	Agency C	Agency N	Remarks
1	2	3	4	5	6		7	8	9	10				11
				In case of Manufacturers/ Supplier WHO HAVE NOT SUPPLIED cables in the past through Corporate Centre / Regional offices	In case of size /type which meet the criteria		1 Sample per type out of all sizes which have met the criteria, will be put on aging test and **witnessed by NTPC as per relevant IS**				----			
					In case of size/ type which do not meet the criteria		Particular size / type will be put on ageing test as per IS. **This test shall be witnessed by NTPC**				----			

LEGEND:- *RECORDS, IDENTIFIED WITH "TICK" UNDER COLUMN "D" SHALL BE ESSENTIALLY INCLUDED BY SUPPLIER IN QA DOCUMENTATION.
-M:MANUFACTURER/SUPPLIER, C:MAIN SUPPLIER, N:NTPC, P:PERFORM W:WITNESS,V:VERFICATION AS APPROPRIATE, CHP: NTPC SHALL IDENTIFY IN COLUMN "N" AS "W"

NTPC	□□□T□M □□□□PM□NT□ M□ □□it□□□e□r (RECEIPT, STORAGE & ERECTION) □□□□□□T□M□	□N□□C□T□□□ □□□L□ □□□L□T□ PL□N C□N□□□M□NC□ T□□NTPC □P□C□□C□T□□N	QP No: REV No: 0□ □□□ DATE: PAGE: VALID UPTO:	REVIEWED BY APPROVED BY

Sl No	ACTIVITY AND OPERATION	CHARACTERISTICS	#CLASS OF CHECK	TYPE OF CHECK	QUANTUM OF CHECK	REFERENCE DOCUMENT	ACCEPTANCE NORMS	FORMAT OF RECORD	D*	REMARKS
1	2	3	4	5	6	7	8	9		10
1	**MATERIAL, RECEIPT AND UNLOADING**	Safe unloading of material at site	C	Visual	100%	Manufacturer Installation Manual	No damage	Logbook		
		Verification of quanity, short supply if any	C	-do-	-do-	Packing List / CHP / MDCC/Challan	Packing List / CHP / MDCC/Challan	-do-		Report to Manufacturer for short supply.
		Package Condition	C	Visual	-do-	Packing List	Free from damages	-do-		Material Damage Report in case of damage
2	**STORAGE**	Movement to warehouse	C	Visual	-do-	Manufacturer Installation Manual	No damage	-do-		
		Storage Space	A	Physical	-do-	-do-	Instruction Manual	-do-		
		Store Handling	C	Physical	-do-	-do-	Store in such a way which avoid direct mechanical hit with sharp objects	-do-		
3	**PRE - ERECTION**	Documents Availaibity	C	Visual	-do-	Ensure availability of Manufacturers instruction manual, NTPC approved Layout drawing/data sheet etc.	Ensure availability of Manufacturers instruction manual, NTPC approved Layout drawing/data sheet etc.	-do-		
		Tools, fixing hardware availability	C	Visual	-do-	Manufacturer Installation Manual	Manufacturer Installation Manual	-do-		
		Completeness of foundadtion, Cable trenches, floor opening for cables	C	Measure	Once before erection	NTPC approved civil drawing	NTPC approved civil drawing	-do-		
		Material Movement to site	C	Visual	-do-	Manufacturer Installation Manual	No damage	-do-		
		Unpacking of Material and its handling	C	Verify	-do-	Manufacturer Installation Manual	No damage	-do-		

LEGEND: * RECORDS INDENTIFIED WITH "TICK" (√) SHALL BE ESSENTIALLY INCLUDED BY SUPPLIER IN QA DOCUMENTATION.

LEGEND TO BE USED: CLASS# : A = CRITICAL, B=MAJOR, C=MINOR; 'A' SHALL BE WITNESSED BY NTPC FQA, **'B'** SHALL BE WITNESSED BY NTPC ERECTION / CONSTRUCTION DEPTT. AND **'C'** SHALL BR WITNESSED BY MAIN SUPPLIER **(A & B SHALL BE NTPC CHP STAGE)**

		□□□T□M □□□□PM□NT□ M□ □□it□□□e□r (RECEIPT, STORAGE & ERECTION) □□□□□□T□M□	□N□□C□T□□□ □□□L□ □□□L□T□ PL□N C□N□□ □M□NC□ T□□NTPC □P□C□□C□T□□N				QP No: REV No: 0□ □□□ DATE: PAGE: VALID UPTO:		REVIEWED BY	APPROVED BY
Sl No	ACTIVITY AND OPERATION	CHARACTERISTICS	#CLASS OF CHECK	TYPE OF CHECK	QUANTUM OF CHECK	REFERENCE DOCUMENT	ACCEPTANCE NORMS	FORMAT OF RECORD	D*	REMARKS
1	2	3	4	5	6	7	8	9		10
4	**ERECTION**	Lift the Panel by using proper material handling equipment and position the Panel in place.	C	Visual	100%	Manufacturer Installation Manual	Manufacturer Installation Manual	Logbook		
		Secure the enclosure mounting lugs to preinstalled anchoring with suitable bolts.	C	Electrical	100%	Manufacturer Installation Manual	Manufacturer Installation Manual	-do-		
		Ensure that base frames are securely tag welded	C	Visual	100%	Manufacturer Installation Manual	Manufacturer Installation Manual	-do-		
		Check verticality of Panels	C	Sprit Level	100%	NTPC approved	NTPC approved	-do-		
		Ensure that remaining units are lined up by placing packers of various thickness under each unit.	C	Visual	100%	NTPC approved	NTPC approved	-do-		
		Ensure that correct sequence of panel positioning is maintained as per layout drawing for both normal & phase reversal panels.	B	Visual	100%	NTPC approved drawing	NTPC approved drawing	-do-		
		Check and ensure that un-plated contact surfaces, if any are thoroughly cleaned and electrical jointing compound applied on the surface after scratching with fine emery paper. Plated surfaces are to be cleaned with solvents.	C	Visual	100%	Manufacturer Installation Manual	Manufacturer Installation Manual	-do-		
		Check correctness of bus duct entry w.r.t. phase sequence for both normal & phase reversal panels.	B	Visual	100%	NTPC approved drawing	NTPC approved drawing	-do-		
		Ensure that the bolting surface are free from dust, grease and other contamination.	C	Visual	100%	Manufacturer Installation Manual	Manufacturer Installation Manual			
		Coupling Bolt/ Busbar connections tighntess	B	Visual	100%	Manufacturers instruction manual	Manufacturers instruction manual.	-do-		5% at random by NTPC
		Panel Earthing (including doors), its tightness & continuity to Earth Pit, no earthing of communication cable shield to panel	B	Visual and Electrical	100%	NTPC approved drawing/Installation Manual	NTPC approved drawing/Installation Manual	-do-		
		Ensure Vacuum Interrupers have not sufferd any damage	C	Visual	100%	Manufacturers instruction manual	Manufacturers instruction manual	-do-		
		Check for no moisture, dust deposition on interruper & insulator surface	C	Visual	100%	Manufacturers instruction manual	Manufacturers instruction manual	-do-		
		Check for compleness of interpanel wiring	C	Visual	100%	NTPC approved drawing	NTPC approved drawing	-do-		

LEGEND: * RECORDS INDENTIFIED WITH "TICK" (Ö) SHALL BE ESSENTIALLY INCLUDED BY SUPPLIER IN QA DOCUMENTATION.

LEGEND TO BE USED: CLASS# : A = CRITICAL, B=MAJOR, C=MINOR; 'A' SHALL BE WITNESSED BY NTPC FQA, **'B'** SHALL BE WITNESSED BY NTPC ERECTION / CONSTRUCTION DEPTT. AND **'C'** SHALL BR WITNESSED BY MAIN SUPPLIER **(A & B SHALL BE NTPC CHP STAGE)**

		□□□T□M □□□PM□NT□ **M□ □□it□□□e□r** (RECEIPT, STORAGE & ERECTION) □□□□□□T□M□	**□N□□C□T□□□ □□□L□ □□□L□T□ PL□N** **C□N□□□M□NC□ T□□NTPC □P□C□□C□T□□N**				**QP No:** **REV No: 0**□ □□□ **DATE:** **PAGE:** **VALID UPTO:**		**REVIEWED BY**	**APPROVED BY**
Sl No	ACTIVITY AND OPERATION	CHARACTERISTICS	#CLASS OF CHECK	TYPE OF CHECK	QUANTUM OF CHECK	REFERENCE DOCUMENT	ACCEPTANCE NORMS	FORMAT OF RECORD	D*	REMARKS
1	2	3	4	5	6	7	8	9		10
		Check cable size for all input, output connections, communications, control connections and auxiliary power connections and check tightening torque of cable termination.	B	Visual	100%	Manufacturer instruction manual/NTPC Approved drawings	Manufacturer instruction manual/NTPC Approved drawings	-do-		5% at random by NTPC
		Verifications that open entries/holes are plugged in.	C	Visual	100%	Manufacturer instruction manual	Manufacturer instruction manual	-do-		
		Ensure CT polarity & CT secondaries shorting where remote instruments are to be used.	B	Electrical	100%	NTPC approved drawing	NTPC approved drawing	-do-		5% at random by NTPC
		Check Voltage artio of PT, in case mounting is done at site	C	Elec	100%	NTPC approved drawing	NTPC approved drawing	-do-		
		Check pad locking of doors	C	Visual	100%	NTPC approved drawings	NTPC approved drawings	-do-		
		Check interchangeability of breaker trolleys	C	Visual	100%	NTPC Specification	NTPC Specification	-do-		
		Check for manual spring charging, closing & tripping of the breaker	C	Visual	200%	NTPC Specification	NTPC Specification	-do-		
		Check for electrical spring charging, closing & tripping of the breaker	C	Visual	300%	NTPC Specification	NTPC Specification	-do-		
		Check degree of protection by paper inertion	B	Visual	400%	NTPC Specification	NTPC Specification	-do-		
		IR Test before & after the HV Test with 500V meggar for control circuit and 5.0KV Meggar for Power Ckt.	B	Electical/Megger/ Multi meter	100%	IEC 62271-200	IEC 62271-200	-do-		
		HV test on Power & control ckt at 90% of test voltage as per IEC-62271-200	A	Electical/Megger/ Multi meter	100%	IEC 62271-200	IEC 62271-200	-do-		

LEGEND: * RECORDS INDENTIFIED WITH "TICK" (Ö) SHALL BE ESSENTIALLY INCLUDED BY SUPPLIER IN QA DOCUMENTATION.

LEGEND TO BE USED: CLASS# : A = CRITICAL, B=MAJOR, C=MINOR; 'A' SHALL BE WITNESSED BY NTPC FQA, **'B'** SHALL BE WITNESSED BY NTPC ERECTION / CONSTRUCTION DEPTT. AND **'C'** SHALL BR WITNESSED BY MAIN SUPPLIER **(A & B SHALL BE NTPC CHP STAGE)**

SUPPLIER'S LOGO	SUPPLIER'S NAME AND ADDRESS	INDICATIVE FIELD QUALITY PLAN		PROJECT :
		ITEM : SWITCHYARD	QP NO.:	PACKAGE :
		SUB-SYSTEM:	REV. NO.:	CONTRACT NO. :
			DATE:	MAIN-SUPPLIER:
			PAGE: …. OF….	

SL. NO	ACTIVITY AND OPERATION	CHARACTERISTICS / INSTRUMENTS	CLASS# OF CHECK	TYPE OF CHECK	QUANTUM OF CHECK	REFERENCE DOCUMENT	ACCEPTANCE NORMS	FORMAT OF RECORD		REMARKS
1.	2.	3.	4.	5.	6.	7.	8.	9.	D*	10.
1	GENERAL									
1.1		Check that all assemblies / components are properly packed in their original or similar packing with suitable clamps, brace and polythene covers as applicable.	C	VISUAL	100%	INSTRUCTION MANUALS	Delivery challan	SITE REGISTER		Periodic anti termite spray with durmet (cynamid) or equivalent on all wooden surfaces wherever applicable.)
1.2		Check that all packages are stored in a ventilated storage.	C	VISUAL	100%	INSTRUCTION MANUALS		SITE REGISTER		
1.3		Check that all small fragile items are stored in proper containers at safe locations to avoid any damage. Ensure that this is stored as per instructions.	B	VISUAL	100%	MFGR. INSTRUCTION MANUAL.		SITE REGISTER		
	HANDLING IN STORAGE									

INDICATIVE FIELD QUALITY PLAN

		LEGEND: * RECORDS, INDENTIFIED WITH "TICK" (√) SHALL BE ESSENTIALLY INCLUDED BY SUPPLIER IN QA DOCUMENTATION. **LEGEND TO BE USED: CLASS # : A = CRITICAL, B=MAJOR, C=MINOR; 'A'** SHALL BE WITNESSED BY NTPC FQA, **'B'** SHALL BE WITNESSED BY NTPC ERECTION / CONSTRUCTION DEPTT. AND **'C'** SHALL BE WITNESSED BY MAIN SUPPLIER (A & B CHECK SHALL BE NTPC CHP STAGE)		DOC. NO.: REV……
MANUFACTURER/ SUB-SUPPLIER	MAIN-SUPPLIER		FOR NTPC USE	
SIGNATURE				REVIEWED BY / APPROVED BY / APPROVAL SEAL

SUPPLIER'S LOGO	SUPPLIER'S NAME AND ADDRESS	INDICATIVE FIELD QUALITY PLAN		PROJECT :
		ITEM : SWITCHYARD	QP NO.:	PACKAGE :
		SUB-SYSTEM:	REV. NO.:	CONTRACT NO. :
			DATE:	MAIN-SUPPLIER:
			PAGE: …. OF….	

SL. NO	ACTIVITY AND OPERATION	CHARACTERISTICS / INSTRUMENTS	CLASS# OF CHECK	TYPE OF CHECK	QUANTUM OF CHECK	REFERENCE DOCUMENT	ACCEPTANCE NORMS	FORMAT OF RECORD		REMARKS
1.	2.	3.	4.	5.	6.	7.	8.	9.	D*	10.
1.4		For easy identification Check that identification marks or tags are kept intact.	C	VISUAL	100%	MFGR. INSTRUCTION MANUAL.		SITE REGISTER		
1.5		Check that the items are stored in a systematic way for easy removal and to avoid any damage.	B	VISUAL	100%	PACKING LIST AND BOM		SITE REGISTER		
1.6		Check that the heavy packages are not stored one above the other.	C	VISUAL	100%	PACKING LIST AND BOM		SITE REGISTER		
1.7		Check that suitable slings are used and that while handling there is no impact on packages. Ensure that the packages are not dropped.	B	VISUAL	100%	VISUAL, PACKING LIST AND BOM		SITE REGISTER		
1.8		Check that the instruction / erection manuals for all equipments have been received from manufacturer.	C	VISUAL	100%	TECHNICAL SPECS. & DRAWINGS.		SITE REGISTER		
1.9		Check that a schedule of erection drawing is available in the instruction manual or is received separately.	C	VISUAL	100%	TECHNICAL SPECS. & DRAWINGS.		SITE REGISTER		

INDICATIVE FIELD QUALITY PLAN

		LEGEND: * RECORDS, INDENTIFIED WITH "TICK" (√) SHALL BE ESSENTIALLY INCLUDED BY SUPPLIER IN QA DOCUMENTATION. **LEGEND TO BE USED: CLASS # : A = CRITICAL, B=MAJOR, C=MINOR; 'A'** SHALL BE WITNESSED BY NTPC FQA, **'B'** SHALL BE WITNESSED BY NTPC ERECTION / CONSTRUCTION DEPTT. AND **'C'** SHALL BE WITNESSED BY MAIN SUPPLIER (A & B CHECK SHALL BE NTPC CHP STAGE)		DOC. NO.: REV……
MANUFACTURER/ SUB-SUPPLIER	MAIN-SUPPLIER		FOR NTPC USE	REVIEWED BY / APPROVED BY / APPROVAL SEAL
SIGNATURE				

SUPPLIER'S LOGO	SUPPLIER'S NAME AND ADDRESS	INDICATIVE FIELD QUALITY PLAN		PROJECT :
		ITEM : SWITCHYARD	QP NO.:	PACKAGE :
		SUB-SYSTEM:	REV. NO.:	CONTRACT NO. :
			DATE:	MAIN-SUPPLIER:
			PAGE: …. OF….	

SL. NO	ACTIVITY AND OPERATION	CHARACTERISTICS / INSTRUMENTS	CLASS# OF CHECK	TYPE OF CHECK	QUANTUM OF CHECK	REFERENCE DOCUMENT	ACCEPTANCE NORMS	FORMAT OF RECORD		REMARKS
1.	2.	3.	4.	5.	6.	7.	8.	9.	D*	10.
1.10		Check the availability of all documents, especially bill of materials, packing list, layout drawing, structural general arrangement and erection drawings as per the schedule.	C	VISUAL	1	TECHNICAL SPECS. & DRAWINGS.		SITE REGISTER		
1.11		Check whether all the mdcc & CHP of equipments and associated material are available at site.	B	VISUAL	1	TECHNICAL SPECS. & DRAWINGS.		SITE REGISTER		
1.12		Check that the proper tools and tackles are used for transporting material to erection site	C	VISUAL	100%	MFGRS. INSTRUCTION MANUAL		SITE REGISTER		
1.13		Check that only required assemblies and components are brought to erection site at the particular stage.	C	VISUAL	100%	LAYOUT DRAWING AND FOUNDATION DRAWING/ NTPC APPROVED DRG. & SPECN.		SITE REGISTER		
1.14		Ensure that fragile items are handled carefully.	C	VISUAL	100%	MANUFACTURER'S MANUAL / INSTRUCTION.		SITE REGISTER .		

INDICATIVE FIELD QUALITY PLAN

		LEGEND: * RECORDS, INDENTIFIED WITH "TICK" (√) SHALL BE ESSENTIALLY INCLUDED BY SUPPLIER IN QA DOCUMENTATION. LEGEND TO BE USED: CLASS # : A = CRITICAL, B=MAJOR, C=MINOR; 'A' SHALL BE WITNESSED BY NTPC FQA, 'B' SHALL BE WITNESSED BY NTPC ERECTION / CONSTRUCTION DEPTT. AND 'C' SHALL BE WITNESSED BY MAIN SUPPLIER (A & B CHECK SHALL BE NTPC CHP STAGE)		DOC. NO.: REV……
MANUFACTURER/ SUB-SUPPLIER	MAIN-SUPPLIER		FOR NTPC USE	REVIEWED BY / APPROVED BY / APPROVAL SEAL
SIGNATURE				

SUPPLIER'S LOGO	SUPPLIER'S NAME AND ADDRESS	INDICATIVE FIELD QUALITY PLAN		PROJECT :
		ITEM : SWITCHYARD	QP NO.:	PACKAGE :
		SUB-SYSTEM:	REV. NO.:	CONTRACT NO. :
			DATE:	MAIN-SUPPLIER:
			PAGE: …. OF….	

SL. NO	ACTIVITY AND OPERATION	CHARACTERISTICS / INSTRUMENTS	CLASS# OF CHECK	TYPE OF CHECK	QUANTUM OF CHECK	REFERENCE DOCUMENT	ACCEPTANCE NORMS	FORMAT OF RECORD		REMARKS
1.	2.	3.	4.	5.	6.	7.	8.	9.	D*	10.
2.0	EARTHING SYSTEM									
	RECEIPT:									
2.1		Receiving Inspection.	C	VISUAL	100%	MFGRS. INSTRUCTION MANUAL.		SITE REGISTER		
2.2		Visual examination	C	VISUAL	100%	PACKING LIST AND BOM		SITE REGISTER		
	STORAGE:									
2.3		Check that earthing materials are stored properly.	B	VISUAL	100%	MFGRS. INSTRUCTION MANUAL.		--DO--		
	ERECTION :									
2.4		Check the Burial depth of Earth mat.	B	VISUAL	100%	MFGRS. INSTRUCTION MANUAL.		--DO--		* The earthmat of live portion and new portion shall be connected only under shutdown.
2.5		Check that the overlaps are jointed properly.	C	VISUAL	100%	MFGRS. INSTRUCTION MANUAL.		--DO--		
2.6		Check that proper electrodes are used for welding / brazing.	B	VISUAL	100%	MFGRS. INSTRUCTION MANUAL.		--DO--		

INDICATIVE FIELD QUALITY PLAN

				DOC. NO.:		REV……
MANUFACTURER/ SUB-SUPPLIER	MAIN-SUPPLIER	LEGEND: * RECORDS, INDENTIFIED WITH "TICK" (√) SHALL BE ESSENTIALLY INCLUDED BY SUPPLIER IN QA DOCUMENTATION. **LEGEND TO BE USED: CLASS # : A = CRITICAL, B=MAJOR, C=MINOR; 'A'** SHALL BE WITNESSED BY NTPC FQA, **'B'** SHALL BE WITNESSED BY NTPC ERECTION / CONSTRUCTION DEPTT. AND **'C'** SHALL BE WITNESSED BY MAIN SUPPLIER (A & B CHECK SHALL BE NTPC CHP STAGE)	FOR NTPC USE			
SIGNATURE				REVIEWED BY	APPROVED BY	APPROVAL SEAL

SUPPLIER'S LOGO	SUPPLIER'S NAME AND ADDRESS	INDICATIVE FIELD QUALITY PLAN		PROJECT :
		ITEM : SWITCHYARD	QP NO.:	PACKAGE :
		SUB-SYSTEM:	REV. NO.:	CONTRACT NO. :
			DATE:	MAIN-SUPPLIER:
			PAGE: …. OF….	

SL. NO	ACTIVITY AND OPERATION	CHARACTERISTICS / INSTRUMENTS	CLASS# OF CHECK	TYPE OF CHECK	QUANTUM OF CHECK	REFERENCE DOCUMENT	ACCEPTANCE NORMS	FORMAT OF RECORD		REMARKS
1.	2.	3.	4.	5.	6.	7.	8.	9.	D*	10.
2.7		Check that protective paints are applied wherever required.	C	VISUAL	100%	MFGRS. INSTRUCTION MANUAL.		--DO--		
2.8		Check that buried pipes are crossing the earth rods / strip from below.		VISUAL	100%	MFGRS. INSTRUCTION MANUAL.		--DO--		
2.9		Check that all the structures of all the equipments, all panels inside the building, cable supports, fences, gates, rail tracks etc are connected to earth mat.	C	VISUAL	100%	MFGRS. INSTRUCTION MANUAL.		--DO--		
3	MAIN AND AUXILIARY STRUCTURE									
3.0	ISOLATOR									
	RECEIPT :									
3.1		Check for any external damages to packing cases.	C	VISUAL	100%	PACKING LIST AND BOM		SITE REGISTER		If packing case received is externally damaged lodge claim on carrier.

INDICATIVE FIELD QUALITY PLAN

		LEGEND: * RECORDS, INDENTIFIED WITH "TICK" (√) SHALL BE ESSENTIALLY INCLUDED BY SUPPLIER IN QA DOCUMENTATION. **LEGEND TO BE USED: CLASS # : A = CRITICAL, B=MAJOR, C=MINOR; 'A'** SHALL BE WITNESSED BY NTPC FQA, **'B'** SHALL BE WITNESSED BY NTPC ERECTION / CONSTRUCTION DEPTT. AND **'C'** SHALL BE WITNESSED BY MAIN SUPPLIER (A & B CHECK SHALL BE NTPC CHP STAGE)		DOC. NO.: REV……
MANUFACTURER/ SUB-SUPPLIER	MAIN-SUPPLIER		FOR NTPC USE	
SIGNATURE				REVIEWED BY / APPROVED BY / APPROVAL SEAL

SUPPLIER'S LOGO	SUPPLIER'S NAME AND ADDRESS	INDICATIVE FIELD QUALITY PLAN		PROJECT :
		ITEM : SWITCHYARD	QP NO.:	PACKAGE :
		SUB-SYSTEM:	REV. NO.:	CONTRACT NO. :
			DATE:	MAIN-SUPPLIER:
			PAGE: …. OF….	

SL. NO	ACTIVITY AND OPERATION	CHARACTERISTICS / INSTRUMENTS	CLASS# OF CHECK	TYPE OF CHECK	QUANTUM OF CHECK	REFERENCE DOCUMENT	ACCEPTANCE NORMS	FORMAT OF RECORD		REMARKS
1.	2.	3.	4.	5.	6.	7.	8.	9.	D*	10.
3.2		Check that the required components of the isolator have been received as per packing list.	C		100%	PACKING LIST AND BOM		SITE REGISTER		
3.3		Check for any visual damage to galvanized surface as the case may be.	B	VISUAL	100%	PACKING LIST AND BOM		SITE REGISTER		
3.4		Check for any shortage of components or another damages.	C	VISUAL	100%	PACKING LIST AND BOM		SITE REGISTER		
3.5		Check all porcelains parts for any kind of physical damage or surface defects.	C	VISUAL	100%	PACKING LIST AND BOM		SITE REGISTER		
	STORAGE :									
										If packing case received is externally damaged lodge claim on carrier.
3.6		Check for storing pi's away from inflammable material	C	VISUAL	100%	MFGRS. INSTRUCTION MANUAL.				
3.7		Check for storing control cubicle / aux. switches in dry and covered places.	B	VISUAL	100%	--DO--				

INDICATIVE FIELD QUALITY PLAN

		LEGEND: * RECORDS, INDENTIFIED WITH "TICK" (√) SHALL BE ESSENTIALLY INCLUDED BY SUPPLIER IN QA DOCUMENTATION. **LEGEND TO BE USED: CLASS # : A = CRITICAL, B=MAJOR, C=MINOR; 'A'** SHALL BE WITNESSED BY NTPC FQA, **'B'** SHALL BE WITNESSED BY NTPC ERECTION / CONSTRUCTION DEPTT. AND **'C'** SHALL BE WITNESSED BY MAIN SUPPLIER (A & B CHECK SHALL BE NTPC CHP STAGE)		DOC. NO.: REV……
MANUFACTURER/ SUB-SUPPLIER	MAIN-SUPPLIER		FOR NTPC USE	
SIGNATURE				REVIEWED BY / APPROVED BY / APPROVAL SEAL

SUPPLIER'S LOGO	SUPPLIER'S NAME AND ADDRESS	INDICATIVE FIELD QUALITY PLAN		PROJECT :
		ITEM : SWITCHYARD	QP NO.:	PACKAGE :
		SUB-SYSTEM:	REV. NO.:	CONTRACT NO. :
			DATE:	MAIN-SUPPLIER:
			PAGE: …. OF….	

SL. NO	ACTIVITY AND OPERATION	CHARACTERISTICS / INSTRUMENTS	CLASS# OF CHECK	TYPE OF CHECK	QUANTUM OF CHECK	REFERENCE DOCUMENT	ACCEPTANCE NORMS	FORMAT OF RECORD		REMARKS
1.	2.	3.	4.	5.	6.	7.	8.	9.	D*	10.
	ERECTION :									
3.8		Structure - Check the structure erected is as per NTPC approved drg.	B	VISUAL	100%	MFGRS. INSTRUCTION MANUAL AND NTPC APPROVED DRAWINGS		SITE REGISTER		
3.9		Tighten foundation bolts properly	C	PHYSICAL	100%	MFGRS. INSTRUCTION MANUAL.		SITE REGISTER		
3.10		Install the base over the two structure columns	C	VISUAL	100%	MFGRS. INSTRUCTION MANUAL.		SITE REGISTER		
3.11		Install the rotor housing assembly on the base.	C	VISUAL	100%	MFGRS. INSTRUCTION MANUAL.		SITE REGISTER		
3.12		Adjust by spirit level the horizontality of the flange, of the rotor.	A	VISUAL	100%	MFGRS. INSTRUCTION MANUAL.		SITE REGISTER		
3.13		Install insulator support	C	VISUAL	100%	MFGRS. INSTRUCTION MANUAL.		SITE REGISTER		
3.14		Install the lever plates as per manufacturers manual	C	VISUAL	100%	MFGRS. INSTRUCTION MANUAL.		SITE REGISTER		
3.15		Couple the cross tandem pipe assembly	C	VISUAL	100%	MFGRS. INSTRUCTION MANUAL.		SITE REGISTER		

INDICATIVE FIELD QUALITY PLAN

		LEGEND: * RECORDS, INDENTIFIED WITH "TICK" (√) SHALL BE ESSENTIALLY INCLUDED BY SUPPLIER IN QA DOCUMENTATION. **LEGEND TO BE USED: CLASS # : A = CRITICAL, B=MAJOR, C=MINOR; 'A'** SHALL BE WITNESSED BY NTPC FQA, **'B'** SHALL BE WITNESSED BY NTPC ERECTION / CONSTRUCTION DEPTT. AND **'C'** SHALL BE WITNESSED BY MAIN SUPPLIER (A & B CHECK SHALL BE NTPC CHP STAGE)		DOC. NO.: REV……
MANUFACTURER/ SUB-SUPPLIER	MAIN-SUPPLIER		FOR NTPC USE	REVIEWED BY / APPROVED BY / APPROVAL SEAL
SIGNATURE				

SUPPLIER'S LOGO	SUPPLIER'S NAME AND ADDRESS	INDICATIVE FIELD QUALITY PLAN		PROJECT :
		ITEM : SWITCHYARD	QP NO.:	PACKAGE :
		SUB-SYSTEM:	REV. NO.:	CONTRACT NO. :
			DATE:	MAIN-SUPPLIER:
			PAGE: …. OF….	

SL. NO	ACTIVITY AND OPERATION	CHARACTERISTICS / INSTRUMENTS	CLASS# OF CHECK	TYPE OF CHECK	QUANTUM OF CHECK	REFERENCE DOCUMENT	ACCEPTANCE NORMS	FORMAT OF RECORD		REMARKS
1.	2.	3.	4.	5.	6.	7.	8.	9.	D*	10.
3.16		Ensure equipment is erected with proper tools	C	VISUAL	100%	MFGRS. INSTRUCTION MANUAL.		SITE REGISTER		
3.17		Ensure correct phase sequence and location of operating mechanism.	B	PHYSICAL	100%	MFGRS. INSTRUCTION MANUAL.		SITE REGISTER		
3.18		Check for continuity for electrical connection.	B	PHYSICAL	100%	MFGRS. INSTRUCTION MANUAL.		SITE REGISTER		
3.19		Ensure operating mechanism is correctly assembled and erected. alignment is properly done	A	VISUAL	100%	MFGRS. INSTRUCTION MANUAL.		SITE REGISTER		
3.20		Check connections of the isolator.	C	PHYSICAL	100%	MFGRS. INSTRUCTION MANUAL.		SITE REGISTER		
3.21		Check for earthing of isolator points / switch cubicles.	C	VISUAL	100%	MFGRS. INSTRUCTION MANUAL.		SITE REGISTER		
4.00	CURRENT TRANSFORMER AND CAPACITIVE VOLTAGE TRANSFORMERS									

INDICATIVE FIELD QUALITY PLAN

		LEGEND: * RECORDS, INDENTIFIED WITH "TICK" (√) SHALL BE ESSENTIALLY INCLUDED BY SUPPLIER IN QA DOCUMENTATION. LEGEND TO BE USED: CLASS # : A = CRITICAL, B=MAJOR, C=MINOR; 'A' SHALL BE WITNESSED BY NTPC FQA, 'B' SHALL BE WITNESSED BY NTPC ERECTION / CONSTRUCTION DEPTT. AND 'C' SHALL BE WITNESSED BY MAIN SUPPLIER (A & B CHECK SHALL BE NTPC CHP STAGE)		DOC. NO.: REV……
MANUFACTURER/ SUB-SUPPLIER	MAIN-SUPPLIER		FOR NTPC USE	
SIGNATURE				REVIEWED BY / APPROVED BY / APPROVAL SEAL

SUPPLIER'S LOGO	SUPPLIER'S NAME AND ADDRESS	INDICATIVE FIELD QUALITY PLAN		PROJECT :
		ITEM : SWITCHYARD	QP NO.:	PACKAGE :
		SUB-SYSTEM:	REV. NO.:	CONTRACT NO. :
			DATE:	MAIN-SUPPLIER:
			PAGE: …. OF….	

SL. NO	ACTIVITY AND OPERATION	CHARACTERISTICS / INSTRUMENTS	CLASS# OF CHECK	TYPE OF CHECK	QUANTUM OF CHECK	REFERENCE DOCUMENT	ACCEPTANCE NORMS	FORMAT OF RECORD		REMARKS
1.	2.	3.	4.	5.	6.	7.	8.	9.	D*	10.
	RECEIPT :									
4.1		Check packing cases for external damaged and oil marks.	C	VISUAL	100%	PACKING LIST AND BOM		SITE REGISTER		
4.2		Check oil leveler mark on CT/CVT	B	VISUAL	100%	PACKING LIST AND BOM		SITE REGISTER		CTs to be stored at site as per the instruction manual of the manufacturer. The recommendations to be strictly followed. oil level to be checked when CT/CVT is received at site
4.3		Check for the quantity and short supplies.	C	VISUAL	100%	PACKING LIST AND BOM		SITE REGISTER		
4.4		Check the name plates CT/CVT reference numbers and generally ensure that the CT/CVT received are of required ratings.	C	VISUAL	100%	PACKING LIST AND BOM AND APPROVED EKD		SITE REGISTER		
4.5		Check for any mechanical damages, cracks, deformations or deep scratches.	C	VISUAL	100%	PACKING LIST AND BOM		SITE REGISTER		

INDICATIVE FIELD QUALITY PLAN

		LEGEND: * RECORDS, INDENTIFIED WITH "TICK" (√) SHALL BE ESSENTIALLY INCLUDED BY SUPPLIER IN QA DOCUMENTATION. **LEGEND TO BE USED: CLASS # : A = CRITICAL, B=MAJOR, C=MINOR; 'A'** SHALL BE WITNESSED BY NTPC FQA, **'B'** SHALL BE WITNESSED BY NTPC ERECTION / CONSTRUCTION DEPTT. AND **'C'** SHALL BE WITNESSED BY MAIN SUPPLIER (A & B CHECK SHALL BE NTPC CHP STAGE)		DOC. NO.: REV……
MANUFACTURER/ SUB-SUPPLIER	MAIN-SUPPLIER		FOR NTPC USE	REVIEWED BY / APPROVED BY / APPROVAL SEAL
SIGNATURE				

SUPPLIER'S LOGO	SUPPLIER'S NAME AND ADDRESS	INDICATIVE FIELD QUALITY PLAN		PROJECT :
		ITEM : SWITCHYARD	QP NO.:	PACKAGE :
		SUB-SYSTEM:	REV. NO.:	CONTRACT NO. :
			DATE:	MAIN-SUPPLIER:
			PAGE: …. OF….	

SL. NO	ACTIVITY AND OPERATION	CHARACTERISTICS / INSTRUMENTS	CLASS# OF CHECK	TYPE OF CHECK	QUANTUM OF CHECK	REFERENCE DOCUMENT	ACCEPTANCE NORMS	FORMAT OF RECORD		REMARKS
1.	2.	3.	4.	5.	6.	7.	8.	9.	D*	10.
4.6		Check for porcelain part for damages, chipping, cracks etc.	C	VISUAL	100%	PACKING LIST AND BOM		SITE REGISTER		
4.7		Check for damages of secondary terminal & primary terminals of CT/CVT.	C	VISUAL	100%	PACKING LIST AND BOM		SITE REGISTER		
4.8		Check that the terminal identification markings for primary terminal and neutral of CVTs are clearly marked as per approved drawing.	C	VISUAL	100%	PACKING LIST AND BOM		SITE REGISTER		
4.9		Check the fixing inserts are in proper condition and that there is no damage to the threads.	C	VISUAL	100%	PACKING LIST AND BOM		SITE REGISTER		
4.10		Check particularly for any visible crack or damage to CVT neck portion and base.	C	VISUAL	100%	PACKING LIST AND BOM		SITE REGISTER		
4.11		Ensure proper and careful handling of packages as well as individual items since fragile items.	C	VISUAL	100%	PACKING LIST AND BOM		SITE REGISTER		

INDICATIVE FIELD QUALITY PLAN

		LEGEND: * RECORDS, INDENTIFIED WITH "TICK" (√) SHALL BE ESSENTIALLY INCLUDED BY SUPPLIER IN QA DOCUMENTATION. **LEGEND TO BE USED: CLASS # : A = CRITICAL, B=MAJOR, C=MINOR; 'A'** SHALL BE WITNESSED BY NTPC FQA, **'B'** SHALL BE WITNESSED BY NTPC ERECTION / CONSTRUCTION DEPTT. AND **'C'** SHALL BE WITNESSED BY MAIN SUPPLIER (A & B CHECK SHALL BE NTPC CHP STAGE)		DOC. NO.: REV……
MANUFACTURER/ SUB-SUPPLIER	MAIN-SUPPLIER		FOR NTPC USE	REVIEWED BY / APPROVED BY / APPROVAL SEAL
SIGNATURE				

SUPPLIER'S LOGO	SUPPLIER'S NAME AND ADDRESS	INDICATIVE FIELD QUALITY PLAN		PROJECT :
		ITEM : SWITCHYARD	QP NO.:	PACKAGE :
		SUB-SYSTEM:	REV. NO.:	CONTRACT NO. :
			DATE:	MAIN-SUPPLIER:
			PAGE: …. OF….	

SL. NO	ACTIVITY AND OPERATION	CHARACTERISTICS / INSTRUMENTS	CLASS# OF CHECK	TYPE OF CHECK	QUANTUM OF CHECK	REFERENCE DOCUMENT	ACCEPTANCE NORMS	FORMAT OF RECORD		REMARKS
1.	2.	3.	4.	5.	6.	7.	8.	9.	D*	10.
	STORAGE:									
4.12		Check that CTs & CVTs are stored in a place protected from dirt, dust and ingress of moisture.	B	VISUAL	100%	MFGRS. INSTRUCTION MANUAL.		--DO--		
4.13		Check that the rating plate and other marking on the CTs & CVTs are kept properly protected during storage.	C	VISUAL	100%	MFGRS. INSTRUCTION MANUAL.		--DO--		
	ERECTION:									
4.14		Check for oil marks damage or any other defect of primary and secondary terminals.	C	VISUAL	100%	MFGRS. INSTRUCTION MANUAL.		SITE REGISTER		
4.15		Ensure the lifting of CT using lifting lugs only (protect porcelain)	C	VISUAL	100%	MFGRS. INSTRUCTION MANUAL.		SITE REGISTER		
4.16		Erection of ct's as per instruction manual and Check for tightening of all the bolts and nuts.	C	PHYSICAL	100%	MFGRS. INSTRUCTION MANUAL.		SITE REGISTER		
4.18		Check earthing terminal for connections to earth mat at correct location.	B	VISUAL	100%	APPROVED DRAWING AND MFGRS. INSTRUCTION MANUAL.		SITE REGISTER		

INDICATIVE FIELD QUALITY PLAN

		LEGEND: * RECORDS, INDENTIFIED WITH "TICK" (√) SHALL BE ESSENTIALLY INCLUDED BY SUPPLIER IN QA DOCUMENTATION. **LEGEND TO BE USED: CLASS # : A = CRITICAL, B=MAJOR, C=MINOR; 'A'** SHALL BE WITNESSED BY NTPC FQA, **'B'** SHALL BE WITNESSED BY NTPC ERECTION / CONSTRUCTION DEPTT. AND **'C'** SHALL BE WITNESSED BY MAIN SUPPLIER (A & B CHECK SHALL BE NTPC CHP STAGE)		DOC. NO.: REV……
MANUFACTURER/ SUB-SUPPLIER	MAIN-SUPPLIER		FOR NTPC USE	REVIEWED BY / APPROVED BY / APPROVAL SEAL
SIGNATURE				

SUPPLIER'S LOGO	SUPPLIER'S NAME AND ADDRESS	INDICATIVE FIELD QUALITY PLAN		PROJECT :
		ITEM : SWITCHYARD	QP NO.:	PACKAGE :
		SUB-SYSTEM:	REV. NO.:	CONTRACT NO. :
			DATE:	MAIN-SUPPLIER:
			PAGE: …. OF….	

SL. NO	ACTIVITY AND OPERATION	CHARACTERISTICS / INSTRUMENTS	CLASS# OF CHECK	TYPE OF CHECK	QUANTUM OF CHECK	REFERENCE DOCUMENT	ACCEPTANCE NORMS	FORMAT OF RECORD		REMARKS
1.	2.	3.	4.	5.	6.	7.	8.	9.	D*	10.
4.19		Mount the ct on structure ensuring correct polarity and level with respect to al. tube. Tighten the bolts as per the instruction given by the manufacturer.	B	PHYSICAL	100%	APPROVED DRAWING AND MFGRS. INSTRUCTION MANUAL.		SITE REGISTER		
4.20		Check for connection made for proper ratio.	C	VISUAL	100%	1.RATING PLATE 2.CONNECTION DIA. 3.MANUFACTURER INSTRUCTIONAL MANUAL.		SITE REGISTER		
5	LIGHTNING ARRESTOR									
	RECEIPT:									
5.1		Check for any external damages to packing case.	C	VISUAL	100%	PACKING LIST AND BOM		SITE REGISTER		If packing case received in damaged condition lodge claim on carrier obtain odc endorse.
5.2		Check for receipt of all components as per packing list.	C	VISUAL	100%	PACKING LIST AND BOM		SITE REGISTER		--do--

INDICATIVE FIELD QUALITY PLAN

		LEGEND: * RECORDS, INDENTIFIED WITH "TICK" (√) SHALL BE ESSENTIALLY INCLUDED BY SUPPLIER IN QA DOCUMENTATION. LEGEND TO BE USED: CLASS # : A = CRITICAL, B=MAJOR, C=MINOR; 'A' SHALL BE WITNESSED BY NTPC FQA, 'B' SHALL BE WITNESSED BY NTPC ERECTION / CONSTRUCTION DEPTT. AND 'C' SHALL BE WITNESSED BY MAIN SUPPLIER (A & B CHECK SHALL BE NTPC CHP STAGE)		DOC. NO.: REV……
MANUFACTURER/ SUB-SUPPLIER	MAIN-SUPPLIER		FOR NTPC USE	REVIEWED BY / APPROVED BY / APPROVAL SEAL
SIGNATURE				

SUPPLIER'S LOGO	SUPPLIER'S NAME AND ADDRESS	INDICATIVE FIELD QUALITY PLAN	PROJECT :
		ITEM : SWITCHYARD SUB-SYSTEM:	QP NO.: REV. NO.: DATE: PAGE: …. OF….	PACKAGE : CONTRACT NO. : MAIN-SUPPLIER:

SL. NO	ACTIVITY AND OPERATION	CHARACTERISTICS / INSTRUMENTS	CLASS# OF CHECK	TYPE OF CHECK	QUANTUM OF CHECK	REFERENCE DOCUMENT	ACCEPTANCE NORMS	FORMAT OF RECORD		REMARKS
1.	2.	3.	4.	5.	6.	7.	8.	9.	D*	10.
5.3		Ensure rating etc. as per order	C	VISUAL	100%	APPROVED EKD, PACKING LIST AND BOM		SITE REGISTER		counter check by NTPC
5.4		Check for any damages to porcelain	C	VISUAL	100%	VISUAL AS PER PACKING LIST AND BOM		SITE REGISTER		counter check by NTPC
5.5		Check that the material is as per order.	C	VISUAL	100%	PACKING LIST AND BOM		SITE REGISTER		counter check by NTPC
	STORAGE :									
5.6		Check that the rated arrestors are stored properly to prevent the wood or cases getting damaged.	B	VISUAL	100%	MFGRS. INSTRUCTION MANUAL.		--DO--		
5.7		store counters, corona rings and supports safety to prevent from dust, dirt etc.	B	VISUAL	100%	MFGRS. INSTRUCTION MANUAL.		--DO--		
	ERECTION :									
5.8		Remove arrestor from the container and clean all surfaces of the arrestor thoroughly.	C	VISUAL	100%	MFGRS. INSTRUCTION MANUAL.		SITE REGISTER		

INDICATIVE FIELD QUALITY PLAN

MANUFACTURER/ SUB-SUPPLIER	MAIN-SUPPLIER	**LEGEND:** * RECORDS, INDENTIFIED WITH "TICK" (√) SHALL BE ESSENTIALLY INCLUDED BY SUPPLIER IN QA DOCUMENTATION. **LEGEND TO BE USED: CLASS # : A = CRITICAL, B=MAJOR, C=MINOR;** **'A'** SHALL BE WITNESSED BY NTPC FQA, **'B'** SHALL BE WITNESSED BY NTPC ERECTION / CONSTRUCTION DEPTT. AND **'C'** SHALL BE WITNESSED BY MAIN SUPPLIER (A & B CHECK SHALL BE NTPC CHP STAGE)	FOR NTPC USE	DOC. NO.: REV……
SIGNATURE				REVIEWED BY / APPROVED BY / APPROVAL SEAL

SUPPLIER'S LOGO	SUPPLIER'S NAME AND ADDRESS	INDICATIVE FIELD QUALITY PLAN		PROJECT :
		ITEM : SWITCHYARD	QP NO.:	PACKAGE :
		SUB-SYSTEM:	REV. NO.:	CONTRACT NO. :
			DATE:	MAIN-SUPPLIER:
			PAGE: …. OF….	

SL. NO	ACTIVITY AND OPERATION	CHARACTERISTICS / INSTRUMENTS	CLASS# OF CHECK	TYPE OF CHECK	QUANTUM OF CHECK	REFERENCE DOCUMENT	ACCEPTANCE NORMS	FORMAT OF RECORD		REMARKS
1.	2.	3.	4.	5.	6.	7.	8.	9.	D*	10.
5.9		Check for order, assembly master name plat etc. as per approved drawing.	C	VISUAL	100%	APPROVED DRAWING		SITE REGISTER		
5.10		arrestor should be erected by / handled with a chain pulley and nylon rope round around the porcelain for installations.	C	VISUAL	100%	MFGRS. INSTRUCTION MANUAL.		SITE REGISTER		
5.11		For arrestor provided with insulation base. the base must be bolted to the structure.	C	VISUAL	100%	MFGRS. INSTRUCTION MANUAL.		SITE REGISTER		
5.12		Surge monitor should be mounted as per drg. at a convenient height and should be connected in parallel with insulating base.	A		100%	MFGRS. INSTRUCTION MANUAL.		SITE REGISTER		
5.13		During installation care should be taken to avoid corona rings striking the porcelain.	C	VISUAL	100%	MFGRS. INSTRUCTION MANUAL.		SITE REGISTER		
5.14		ensure that no intermediate earthing connection shall make to earthing leads.	A	VISUAL	100%	MFGRS. INSTRUCTION MANUAL.		SITE REGISTER		

INDICATIVE FIELD QUALITY PLAN

		LEGEND: * RECORDS, INDENTIFIED WITH "TICK" (√) SHALL BE ESSENTIALLY INCLUDED BY SUPPLIER IN QA DOCUMENTATION. LEGEND TO BE USED: CLASS # : A = CRITICAL, B=MAJOR, C=MINOR; 'A' SHALL BE WITNESSED BY NTPC FQA, 'B' SHALL BE WITNESSED BY NTPC ERECTION / CONSTRUCTION DEPTT. AND 'C' SHALL BE WITNESSED BY MAIN SUPPLIER (A & B CHECK SHALL BE NTPC CHP STAGE)		DOC. NO.:		REV……
MANUFACTURER/ SUB-SUPPLIER	MAIN-SUPPLIER		FOR NTPC USE			
SIGNATURE				REVIEWED BY	APPROVED BY	APPROVAL SEAL

SUPPLIER'S LOGO	SUPPLIER'S NAME AND ADDRESS	INDICATIVE FIELD QUALITY PLAN		PROJECT :
		ITEM : SWITCHYARD	QP NO.:	PACKAGE :
		SUB-SYSTEM:	REV. NO.:	CONTRACT NO. :
			DATE:	MAIN-SUPPLIER:
			PAGE: …. OF….	

SL. NO	ACTIVITY AND OPERATION	CHARACTERISTICS / INSTRUMENTS	CLASS# OF CHECK	TYPE OF CHECK	QUANTUM OF CHECK	REFERENCE DOCUMENT	ACCEPTANCE NORMS	FORMAT OF RECORD		REMARKS
1.	2.	3.	4.	5.	6.	7.	8.	9.	D*	10.
6.0	CLAMPS & CONNECTORS									
	RECEIPT :									
6.1		Check pkg. cases for external damage.	C	VISUAL	100%	PACKING LIST AND BOM		SITE REGISTER		
6.2		Check for quantity of each type of clamp as per the packing list. Check size / physical arrangement as per drawings.	C	VISUAL	100%	PACKING LIST AND BOM		SITE REGISTER		
6.3		Check for its physical appearance and any possible damage such as scratches, deep cut etc. during transit.	C	VISUAL	100%	PACKING LIST AND BOM		SITE REGISTER		
	STORAGE									
6.4		Check that clamps & connectors are stored in a place protected from dirt, dust and ingress of moisture.	B	VISUAL	100%	MFGRS. INSTRUCTION MANUAL.		--DO--		
6.5		Check that clamps & connectors are kept in packed condition or atleast covered with polythene covers.	B	VISUAL	100%	MFGRS. INSTRUCTION MANUAL.		--DO--		

INDICATIVE FIELD QUALITY PLAN

		LEGEND: * RECORDS, INDENTIFIED WITH "TICK" (√) SHALL BE ESSENTIALLY INCLUDED BY SUPPLIER IN QA DOCUMENTATION. LEGEND TO BE USED: CLASS # : A = CRITICAL, B=MAJOR, C=MINOR; 'A' SHALL BE WITNESSED BY NTPC FQA, 'B' SHALL BE WITNESSED BY NTPC ERECTION / CONSTRUCTION DEPTT. AND 'C' SHALL BE WITNESSED BY MAIN SUPPLIER (A & B CHECK SHALL BE NTPC CHP STAGE)		DOC. NO.: REV……
MANUFACTURER/ SUB-SUPPLIER	MAIN-SUPPLIER		FOR NTPC USE	REVIEWED BY / APPROVED BY / APPROVAL SEAL
SIGNATURE				

SUPPLIER'S LOGO	SUPPLIER'S NAME AND ADDRESS	INDICATIVE FIELD QUALITY PLAN		PROJECT :
		ITEM : SWITCHYARD	QP NO.:	PACKAGE :
		SUB-SYSTEM:	REV. NO.:	CONTRACT NO. :
			DATE:	MAIN-SUPPLIER:
			PAGE: …. OF….	

SL. NO	ACTIVITY AND OPERATION	CHARACTERISTICS / INSTRUMENTS	CLASS# OF CHECK	TYPE OF CHECK	QUANTUM OF CHECK	REFERENCE DOCUMENT	ACCEPTANCE NORMS	FORMAT OF RECORD		REMARKS
1.	2.	3.	4.	5.	6.	7.	8.	9.	D*	10.
	ERECTION:									
6.6		Erection of clamps & connectors as per drawing.	B	VISUAL	100%	APPROVED DRAWING AND MFGRS. INSTRUCTION MANUAL.		--DO--		
6.7		Clamps & connectors tighten to their respective equipment as per given equipment.	B	VISUAL	100%	APPROVED DRAWING AND MFGRS. INSTRUCTION MANUAL.		--DO--		
7.0	INSULATORS AND INSULATOR HARDWARES									
	RECEIPT :									
7.1		External damage to pkg.	C	VISUAL	100%	PACKING LIST AND BOM		SITE REGISTER		If packing case received in damaged condition lodge claim on carrier obtain odc endorse LR/RR. lodge claims. Counter check by NTPC.

INDICATIVE FIELD QUALITY PLAN

		LEGEND: * RECORDS, INDENTIFIED WITH "TICK" (√) SHALL BE ESSENTIALLY INCLUDED BY SUPPLIER IN QA DOCUMENTATION. **LEGEND TO BE USED: CLASS # : A = CRITICAL, B=MAJOR, C=MINOR; 'A'** SHALL BE WITNESSED BY NTPC FQA, **'B'** SHALL BE WITNESSED BY NTPC ERECTION / CONSTRUCTION DEPTT. AND **'C'** SHALL BE WITNESSED BY MAIN SUPPLIER (A & B CHECK SHALL BE NTPC CHP STAGE)		DOC. NO.: REV……
MANUFACTURER/ SUB-SUPPLIER	MAIN-SUPPLIER		FOR NTPC USE	REVIEWED BY / APPROVED BY / APPROVAL SEAL
SIGNATURE				

SUPPLIER'S LOGO	SUPPLIER'S NAME AND ADDRESS	INDICATIVE FIELD QUALITY PLAN		PROJECT :
		ITEM : SWITCHYARD	QP NO.:	PACKAGE :
		SUB-SYSTEM:	REV. NO.:	CONTRACT NO. :
			DATE:	MAIN-SUPPLIER:
			PAGE: …. OF….	

SL. NO	ACTIVITY AND OPERATION	CHARACTERISTICS / INSTRUMENTS	CLASS# OF CHECK	TYPE OF CHECK	QUANTUM OF CHECK	REFERENCE DOCUMENT	ACCEPTANCE NORMS	FORMAT OF RECORD		REMARKS
1.	2.	3.	4.	5.	6.	7.	8.	9.	D*	10.
7.2		Check for quantity and ensure that entire quantity duly inspected and cleared by NTPC.	C	VISUAL	100%	PACKING LIST AND BOM		SITE REGISTER		--do--
7.3		Check for surface defects / damage of insulator, cracks scratches and chipping of cementing portion.	B	VISUAL	100%	VISUAL, PACKING LIST AND BOM		SITE REGISTER		--do--
7.4		galvanize and visual defects of metal parts and any slackness of metal parts and chips etc.	C	VISUAL	100%	VISUAL, PACKING LIST AND BOM		SITE REGISTER		--do--
7.5		Ensure properly repacked to avoid any damage before sending for storage.	C	VISUAL	100%	VISUAL, PACKING LIST AND BOM AS PER MFGRS. INSTRUCTION MANUAL		SITE REGISTER		--do--
	STORAGE:									
7.6		Check that insulators & insulator hardware are stored in a place protected from dirt, dust and ingress of moisture.	B	VISUAL	100%	MFGRS. INSTRUCTION MANUAL.		--DO--		--do--

INDICATIVE FIELD QUALITY PLAN

MANUFACTURER/ SUB-SUPPLIER	MAIN-SUPPLIER	LEGEND: * RECORDS, INDENTIFIED WITH "TICK" (√) SHALL BE ESSENTIALLY INCLUDED BY SUPPLIER IN QA DOCUMENTATION. **LEGEND TO BE USED: CLASS # : A = CRITICAL, B=MAJOR, C=MINOR; 'A'** SHALL BE WITNESSED BY NTPC FQA, **'B'** SHALL BE WITNESSED BY NTPC ERECTION / CONSTRUCTION DEPTT. AND **'C'** SHALL BE WITNESSED BY MAIN SUPPLIER (A & B CHECK SHALL BE NTPC CHP STAGE)	FOR NTPC USE	DOC. NO.:		REV……
SIGNATURE				REVIEWED BY	APPROVED BY	APPROVAL SEAL

SUPPLIER'S LOGO	SUPPLIER'S NAME AND ADDRESS	INDICATIVE FIELD QUALITY PLAN		PROJECT :
		ITEM : SWITCHYARD	QP NO.:	PACKAGE :
		SUB-SYSTEM:	REV. NO.:	CONTRACT NO. :
			DATE:	MAIN-SUPPLIER:
			PAGE: …. OF….	

SL. NO	ACTIVITY AND OPERATION	CHARACTERISTICS / INSTRUMENTS	CLASS# OF CHECK	TYPE OF CHECK	QUANTUM OF CHECK	REFERENCE DOCUMENT	ACCEPTANCE NORMS	FORMAT OF RECORD		REMARKS
1.	2.	3.	4.	5.	6.	7.	8.	9.	D*	10.
	ERECTION:									
7.8		Remove insulator from wooden cases and clean the surface of insulator.	B	VISUAL	100%	MFGRS. INSTRUCTION MANUAL.		--DO--		--do--
7.9		Install the insulator and hardware as per approved drawing	B	VISUAL	100%	MFGRS. INSTRUCTION MANUAL.		--DO--		--do--
8.0	EARTH WIRE AND ACSR CONDUCTORS									
	RECEIPT:									
8.1		Check conductor for drums for damage that they are in a good condition to be rolled without damaging the conductor.	C	VISUAL	100%	MFGRS. INSTRUCTION MANUAL.		SITE REGISTER		
8.2		Check for physical appearance and damage to conductor specially two top layers and end seals and NTPC is seal.	C	VISUAL	100%	PACKING LIST AND BOM		SITE REGISTER		
	STORAGE:									

INDICATIVE FIELD QUALITY PLAN

MANUFACTURER/ SUB-SUPPLIER	MAIN-SUPPLIER	LEGEND: * RECORDS, INDENTIFIED WITH "TICK" (√) SHALL BE ESSENTIALLY INCLUDED BY SUPPLIER IN QA DOCUMENTATION. **LEGEND TO BE USED: CLASS # : A = CRITICAL, B=MAJOR, C=MINOR; 'A'** SHALL BE WITNESSED BY NTPC FQA, **'B'** SHALL BE WITNESSED BY NTPC ERECTION / CONSTRUCTION DEPTT. AND **'C'** SHALL BE WITNESSED BY MAIN SUPPLIER (A & B CHECK SHALL BE NTPC CHP STAGE)	FOR NTPC USE	DOC. NO.:		REV……
SIGNATURE				REVIEWED BY	APPROVED BY	APPROVAL SEAL

SUPPLIER'S LOGO	SUPPLIER'S NAME AND ADDRESS	INDICATIVE FIELD QUALITY PLAN		PROJECT :
		ITEM : SWITCHYARD	QP NO.:	PACKAGE :
		SUB-SYSTEM:	REV. NO.:	CONTRACT NO. :
			DATE:	MAIN-SUPPLIER:
			PAGE: …. OF….	

SL. NO	ACTIVITY AND OPERATION	CHARACTERISTICS / INSTRUMENTS	CLASS# OF CHECK	TYPE OF CHECK	QUANTUM OF CHECK	REFERENCE DOCUMENT	ACCEPTANCE NORMS	FORMAT OF RECORD		REMARKS
1.	2.	3.	4.	5.	6.	7.	8.	9.	D*	10.
8.3		Check that earthwire & ACSR conductors are stored in a place protected from dirt, dust and ingress of moisture.	B	VISUAL	100%	MFGRS. INSTRUCTION MANUAL.		--DO--		
8.4		Check that earthwire & ACSR conductors are kept in packed condition or atleast covered with polythene covers.	B	VISUAL	100%	MFGRS. INSTRUCTION MANUAL.		--DO--		
	ERECTION :									
8.5		The paving of earth wire and conductor should be over ground drum to avoid direct contact and scratches from the soil.	C	VISUAL	100%	MFGRS. INSTRUCTION MANUAL.		--DO--		
8.6		Check the proper alignment and tightening before crimping the lugs.	C	VISUAL	100%	MFGRS. INSTRUCTION MANUAL.		--DO--		
9.0	3" / 4" IPS ALUMINIUM TUBE (IF APPLICABLE									
	RECEIPT :									

INDICATIVE FIELD QUALITY PLAN

		LEGEND: * RECORDS, INDENTIFIED WITH "TICK" (√) SHALL BE ESSENTIALLY INCLUDED BY SUPPLIER IN QA DOCUMENTATION. LEGEND TO BE USED: CLASS # : A = CRITICAL, B=MAJOR, C=MINOR; 'A' SHALL BE WITNESSED BY NTPC FQA, 'B' SHALL BE WITNESSED BY NTPC ERECTION / CONSTRUCTION DEPTT. AND 'C' SHALL BE WITNESSED BY MAIN SUPPLIER (A & B CHECK SHALL BE NTPC CHP STAGE)		DOC. NO.: REV……
MANUFACTURER/ SUB-SUPPLIER	MAIN-SUPPLIER		FOR NTPC USE	REVIEWED BY / APPROVED BY / APPROVAL SEAL
SIGNATURE				

SUPPLIER'S LOGO	SUPPLIER'S NAME AND ADDRESS	INDICATIVE FIELD QUALITY PLAN		PROJECT :
		ITEM : SWITCHYARD	QP NO.:	PACKAGE :
		SUB-SYSTEM:	REV. NO.:	CONTRACT NO. :
			DATE:	MAIN-SUPPLIER:
			PAGE: …. OF….	

SL. NO	ACTIVITY AND OPERATION	CHARACTERISTICS / INSTRUMENTS	CLASS# OF CHECK	TYPE OF CHECK	QUANTUM OF CHECK	REFERENCE DOCUMENT	ACCEPTANCE NORMS	FORMAT OF RECORD		REMARKS
1.	2.	3.	4.	5.	6.	7.	8.	9.	D*	10.
9.1		Check for quantity	C	VISUAL	100%	PACKING LIST AND BOM		--DO--		If packing case received in damaged condition lodge claim on carrier obtain odc endorse LR/RR.
9.2		Check for physical conditions cracks, scratches, during transit.	C	VISUAL	100%	VISUAL, PACKING LIST AND BOM		SITE REGISTER		No physical damage.
	STORAGE :									
9.4		Check that aluminium tubes are kept in packed condition or atleast covered with polythene covers.	C	VISUAL	100%	--DO--		--DO--		
	ERECTION :									
9.5		Polishing the al. tube to remove the scratches and measurement of ID and OD to ensure the minimum thickness as per specification.	B	PHYSICAL	100%	NTPC APPROVED DRGS. & TECHNICAL SPECS.		SITE REGISTER		
9.6		Check the proper alignment for complete al. tube is achieved and verified before any welding.	C	VISUAL	100%	NTPC APPROVED DRGS. & TECHNICAL SPECS.		SITE REGISTER		

INDICATIVE FIELD QUALITY PLAN

		LEGEND: * RECORDS, INDENTIFIED WITH "TICK" (√) SHALL BE ESSENTIALLY INCLUDED BY SUPPLIER IN QA DOCUMENTATION. LEGEND TO BE USED: CLASS # : A = CRITICAL, B=MAJOR, C=MINOR; 'A' SHALL BE WITNESSED BY NTPC FQA, 'B' SHALL BE WITNESSED BY NTPC ERECTION / CONSTRUCTION DEPTT. AND 'C' SHALL BE WITNESSED BY MAIN SUPPLIER (A & B CHECK SHALL BE NTPC CHP STAGE)		DOC. NO.:		REV……
MANUFACTURER/ SUB-SUPPLIER	MAIN-SUPPLIER		FOR NTPC USE			
SIGNATURE				REVIEWED BY	APPROVED BY	APPROVAL SEAL

SUPPLIER'S LOGO	SUPPLIER'S NAME AND ADDRESS	INDICATIVE FIELD QUALITY PLAN		PROJECT :
		ITEM : SWITCHYARD	QP NO.:	PACKAGE :
		SUB-SYSTEM:	REV. NO.:	CONTRACT NO. :
			DATE:	MAIN-SUPPLIER:
			PAGE: …. OF….	

SL. NO	ACTIVITY AND OPERATION	CHARACTERISTICS / INSTRUMENTS	CLASS# OF CHECK	TYPE OF CHECK	QUANTUM OF CHECK	REFERENCE DOCUMENT	ACCEPTANCE NORMS	FORMAT OF RECORD		REMARKS
1.	2.	3.	4.	5.	6.	7.	8.	9.	D*	10.
9.7		Before the welding Check that no inflammable material is present around the work spot.	C	VISUAL	100%	VISUAL		SITE REGISTER		
9.8		Check that the porcelain are protected before doing any welding on al. tubes	C	VISUAL	100%	--DO--		SITE REGISTER		
9.9		Check that welding is done by only qualified and approved welder, whose performance has been pre-tested with a test piece at site strictly in accordance with the approved welding procedure with recommended welding material and welding machine and the strength of the weld joint is not less than of present material strength. ensure that welding rods are ISI make only	A	PERFORMANCE TEST AT SITE	100%	AS PER NTPC APPROVED WPS		SITE REGISTER		WPS to be submitted for NTPC approval.If welders to be qualified prior start of work.

INDICATIVE FIELD QUALITY PLAN

		LEGEND: * RECORDS, INDENTIFIED WITH "TICK" (√) SHALL BE ESSENTIALLY INCLUDED BY SUPPLIER IN QA DOCUMENTATION. **LEGEND TO BE USED: CLASS # : A = CRITICAL, B=MAJOR, C=MINOR; 'A'** SHALL BE WITNESSED BY NTPC FQA, **'B'** SHALL BE WITNESSED BY NTPC ERECTION / CONSTRUCTION DEPTT. AND **'C'** SHALL BE WITNESSED BY MAIN SUPPLIER (A & B CHECK SHALL BE NTPC CHP STAGE)		DOC. NO.:	REV……
MANUFACTURER/ SUB-SUPPLIER	MAIN-SUPPLIER		FOR NTPC USE	REVIEWED BY / APPROVED BY / APPROVAL SEAL
SIGNATURE				

SUPPLIER'S LOGO	SUPPLIER'S NAME AND ADDRESS	INDICATIVE FIELD QUALITY PLAN		PROJECT :
		ITEM : SWITCHYARD	QP NO.:	PACKAGE :
		SUB-SYSTEM:	REV. NO.:	CONTRACT NO. :
			DATE:	MAIN-SUPPLIER:
			PAGE: …. OF….	

SL. NO	ACTIVITY AND OPERATION	CHARACTERISTICS / INSTRUMENTS	CLASS# OF CHECK	TYPE OF CHECK	QUANTUM OF CHECK	REFERENCE DOCUMENT	ACCEPTANCE NORMS	FORMAT OF RECORD		REMARKS
1.	2.	3.	4.	5.	6.	7.	8.	9.	D*	10.
9.10		Ensure that the welding of al. tube are done as per instructions and that best quality welding is achieved. Strict adherence to instructions given in manual and as per approved procedure should be ensured.	B		100%	ELECTRICAL LAYOUT DRAWINGS,/ INSTRUCTION MANUAL WELDING INSTRUCTIONS.		SITE REGISTER		Counter check by NTPC.
9.11		Check that the alignment of tubes are done as per instructions and that best quality welding is achieved.	B	VISUAL	100%	ELECTRICAL LAYOUT DRAWINGS,/ INSTRUCTION MANUAL WELDING INSTRUCTIONS.		SITE REGISTER		
9.12		Dye penetration test	A	PHYSICAL	10%	AS PER INSTRUCTION MANUAL		SITE REGISTER		

INDICATIVE FIELD QUALITY PLAN

		LEGEND: * RECORDS, INDENTIFIED WITH "TICK" (√) SHALL BE ESSENTIALLY INCLUDED BY SUPPLIER IN QA DOCUMENTATION. **LEGEND TO BE USED: CLASS # : A = CRITICAL, B=MAJOR, C=MINOR; 'A'** SHALL BE WITNESSED BY NTPC FQA, **'B'** SHALL BE WITNESSED BY NTPC ERECTION / CONSTRUCTION DEPTT. AND **'C'** SHALL BE WITNESSED BY MAIN SUPPLIER (A & B CHECK SHALL BE NTPC CHP STAGE)		DOC. NO.:	REV……
MANUFACTURER/ SUB-SUPPLIER	MAIN-SUPPLIER		FOR NTPC USE	REVIEWED BY / APPROVED BY / APPROVAL SEAL
SIGNATURE				

SUPPLIER'S LOGO	SUPPLIER'S NAME AND ADDRESS	INDICATIVE FIELD QUALITY PLAN		PROJECT :
		ITEM : SWITCHYARD	QP NO.:	PACKAGE :
		SUB-SYSTEM:	REV. NO.:	CONTRACT NO. :
			DATE:	MAIN-SUPPLIER:
			PAGE: …. OF….	

SL. NO	ACTIVITY AND OPERATION	CHARACTERISTICS / INSTRUMENTS	CLASS# OF CHECK	TYPE OF CHECK	QUANTUM OF CHECK	REFERENCE DOCUMENT	ACCEPTANCE NORMS	FORMAT OF RECORD		REMARKS
1.	2.	3.	4.	5.	6.	7.	8.	9.	D*	10.
9.13		X-ray on welded joint test	A		10%	GDCD		SITE REGISTER		Location of the x-ray test will be selected by NTPC and failure shall be reviewed by NTPC radiography on welded joint will be checked on 10% of the total length of circumferential.
10.0	CIRCUIT BREAKERS									
	RECEIPT :									
10.1		Check for any external damages to packing case.	C	VISUAL	100%	PACKING LIST AND BOM		SITE REGISTER		
10.2		Check that the required components of circuit breaker have been received as per packing list / bill of materials.	C	VISUAL	100%	PACKING LIST AND BOM		SITE REGISTER		
10.3		Check for any visual damage to galvanising/ painting as the case may be.	C	VISUAL	100%	PACKING LIST AND BOM		SITE REGISTER		

INDICATIVE FIELD QUALITY PLAN

MANUFACTURER/ SUB-SUPPLIER	MAIN-SUPPLIER	LEGEND: * RECORDS, INDENTIFIED WITH "TICK" (√) SHALL BE ESSENTIALLY INCLUDED BY SUPPLIER IN QA DOCUMENTATION. **LEGEND TO BE USED: CLASS # : A = CRITICAL, B=MAJOR, C=MINOR; 'A'** SHALL BE WITNESSED BY NTPC FQA, **'B'** SHALL BE WITNESSED BY NTPC ERECTION / CONSTRUCTION DEPTT. AND **'C'** SHALL BE WITNESSED BY MAIN SUPPLIER (A & B CHECK SHALL BE NTPC CHP STAGE)	FOR NTPC USE	DOC. NO.:		REV……
SIGNATURE				REVIEWED BY	APPROVED BY	APPROVAL SEAL

SUPPLIER'S LOGO	SUPPLIER'S NAME AND ADDRESS	INDICATIVE FIELD QUALITY PLAN		PROJECT :
		ITEM : SWITCHYARD	QP NO.:	PACKAGE :
		SUB-SYSTEM:	REV. NO.:	CONTRACT NO. :
			DATE:	MAIN-SUPPLIER:
			PAGE: …. OF….	

SL. NO	ACTIVITY AND OPERATION	CHARACTERISTICS / INSTRUMENTS	CLASS# OF CHECK	TYPE OF CHECK	QUANTUM OF CHECK	REFERENCE DOCUMENT	ACCEPTANCE NORMS	FORMAT OF RECORD		REMARKS
1.	2.	3.	4.	5.	6.	7.	8.	9.	D*	10.
10.4		Check for any shortage of component and of any other damages in accessible areas of condensation of moisture in arechamember/ driving unit critical areas.	C	VISUAL	100%	PACKING LIST AND BOM		SITE REGISTER		
10.5		Check all porcelain parts	C	VISUAL	100%	VISUAL				
10.6		Check for gas leakage / oil leakage / smell.	B	VISUAL	100%	MANUFACTURER'S INSTRUCTION MANUAL.		SITE REGISTER		counter check by NTPC
10.7		Handling of parts under gas pressure. Check the cleanliness of components equipment received, dirt, girt, soiled parts if any.	C	VISUAL	100%	MANUFACTURER'S INSTRUCTION MANUAL.		SITE REGISTER		
	STORAGE :									
10.8		Check that CBs are stored as per manufacturer instruction.	B	VISUAL	100%	MFGRS. INSTRUCTION MANUAL.		--DO--		
10.9		Check for storing CBs away from the inflamable material.	B	VISUAL	100%	MFGRS. INSTRUCTION MANUAL.		--DO--		
	ERECTION :									

INDICATIVE FIELD QUALITY PLAN

		LEGEND: * RECORDS, INDENTIFIED WITH "TICK" (√) SHALL BE ESSENTIALLY INCLUDED BY SUPPLIER IN QA DOCUMENTATION. LEGEND TO BE USED: CLASS # : A = CRITICAL, B=MAJOR, C=MINOR; 'A' SHALL BE WITNESSED BY NTPC FQA, 'B' SHALL BE WITNESSED BY NTPC ERECTION / CONSTRUCTION DEPTT. AND 'C' SHALL BE WITNESSED BY MAIN SUPPLIER (A & B CHECK SHALL BE NTPC CHP STAGE)		DOC. NO.:		REV……
MANUFACTURER/ SUB-SUPPLIER	MAIN-SUPPLIER		FOR NTPC USE			
SIGNATURE				REVIEWED BY	APPROVED BY	APPROVAL SEAL

SUPPLIER'S LOGO	SUPPLIER'S NAME AND ADDRESS	INDICATIVE FIELD QUALITY PLAN		PROJECT :
		ITEM : SWITCHYARD	QP NO.:	PACKAGE :
		SUB-SYSTEM:	REV. NO.:	CONTRACT NO. :
			DATE:	MAIN-SUPPLIER:
			PAGE: …. OF….	

SL. NO	ACTIVITY AND OPERATION	CHARACTERISTICS / INSTRUMENTS	CLASS# OF CHECK	TYPE OF CHECK	QUANTUM OF CHECK	REFERENCE DOCUMENT	ACCEPTANCE NORMS	FORMAT OF RECORD		REMARKS
1.	2.	3.	4.	5.	6.	7.	8.	9.	D*	10.
10.1		Completeness of erection of breaker as per drg. and manual in correct phase sequence and location with proper tools.	C	VISUAL	100%	APPROVED DRAWINGS AND MFGRS. INSTRUCTION MANUAL		SITE REGISTER		
10.11		Wires and bus connection and tightness of below connections.	C	VISUAL	100%	APPROVED DRAWINGS AND MFGRS. INSTRUCTION MANUAL		SITE REGISTER		
10.12		Cable terminators and electrical continuity Check.	B	PHYSICAL	100%	APPROVED DRAWINGS AND MFGRS. INSTRUCTION MANUAL		SITE REGISTER		
10.13		Leakage of air (sf6 gas)	B	PHYSICAL	100%	APPROVED DRAWINGS AND MFGRS. INSTRUCTION MANUAL		SITE REGISTER		
10.14		Check for earthing connection	B	VISUAL	100%	APPROVED DRAWINGS AND MFGRS. INSTRUCTION MANUAL		SITE REGISTER		

INDICATIVE FIELD QUALITY PLAN

		LEGEND: * RECORDS, INDENTIFIED WITH "TICK" (√) SHALL BE ESSENTIALLY INCLUDED BY SUPPLIER IN QA DOCUMENTATION. **LEGEND TO BE USED: CLASS # : A = CRITICAL, B=MAJOR, C=MINOR; 'A'** SHALL BE WITNESSED BY NTPC FQA, **'B'** SHALL BE WITNESSED BY NTPC ERECTION / CONSTRUCTION DEPTT. AND **'C'** SHALL BE WITNESSED BY MAIN SUPPLIER (A & B CHECK SHALL BE NTPC CHP STAGE)		DOC. NO.:	REV……
MANUFACTURER/ SUB-SUPPLIER	MAIN-SUPPLIER		FOR NTPC USE	REVIEWED BY / APPROVED BY / APPROVAL SEAL
SIGNATURE				

SUPPLIER'S LOGO	SUPPLIER'S NAME AND ADDRESS	INDICATIVE FIELD QUALITY PLAN		PROJECT :
		ITEM : SWITCHYARD	QP NO.:	PACKAGE :
		SUB-SYSTEM:	REV. NO.:	CONTRACT NO. :
			DATE:	MAIN-SUPPLIER:
			PAGE: …. OF….	

SL. NO	ACTIVITY AND OPERATION	CHARACTERISTICS / INSTRUMENTS	CLASS# OF CHECK	TYPE OF CHECK	QUANTUM OF CHECK	REFERENCE DOCUMENT	ACCEPTANCE NORMS	FORMAT OF RECORD		REMARKS
1.	2.	3.	4.	5.	6.	7.	8.	9.	D*	10.
10.15		Connection in between individual pole unit and control unit.	C	VISUAL	100%	APPROVED DRAWINGS AND MFGRS. INSTRUCTION MANUAL		SITE REGISTER		
10.16		Check for tightening of all bolts & nuts	B	PHYSICAL	100%	APPROVED DRAWINGS AND MFGRS. INSTRUCTION MANUAL		SITE REGISTER		Counter check by NTPC
11.0	RELAY AND PROTECTION PANEL									
	RECEIPT :									
11.1		Check for any external damages to packing.	C	VISUAL	100%	PACKING LIST AND BOM		SITE REGISTER		If packing case received in damaged condition lodge claim on carrier obtain odc endorse LR/RR.
11.2		Check that all required mountings have been properly mounted.	C	VISUAL	100%	PACKING LIST AND BOM		SITE REGISTER		
11.3		Ensure that the items not mounted are received as loose supply.	C	VISUAL	100%	PACKING LIST AND BOM		SITE REGISTER		

INDICATIVE FIELD QUALITY PLAN

MANUFACTURER/ SUB-SUPPLIER	MAIN-SUPPLIER	LEGEND: * RECORDS, INDENTIFIED WITH "TICK" (√) SHALL BE ESSENTIALLY INCLUDED BY SUPPLIER IN QA DOCUMENTATION. LEGEND TO BE USED: CLASS # : A = CRITICAL, B=MAJOR, C=MINOR; 'A' SHALL BE WITNESSED BY NTPC FQA, 'B' SHALL BE WITNESSED BY NTPC ERECTION / CONSTRUCTION DEPTT. AND 'C' SHALL BE WITNESSED BY MAIN SUPPLIER (A & B CHECK SHALL BE NTPC CHP STAGE)	FOR NTPC USE	DOC. NO.:		REV……
SIGNATURE				REVIEWED BY	APPROVED BY	APPROVAL SEAL

SUPPLIER'S LOGO	SUPPLIER'S NAME AND ADDRESS	INDICATIVE FIELD QUALITY PLAN		PROJECT :
		ITEM : SWITCHYARD	QP NO.:	PACKAGE :
		SUB-SYSTEM:	REV. NO.:	CONTRACT NO. :
			DATE:	MAIN-SUPPLIER:
			PAGE: …. OF….	

SL. NO	ACTIVITY AND OPERATION	CHARACTERISTICS / INSTRUMENTS	CLASS# OF CHECK	TYPE OF CHECK	QUANTUM OF CHECK	REFERENCE DOCUMENT	ACCEPTANCE NORMS	FORMAT OF RECORD		REMARKS
1.	2.	3.	4.	5.	6.	7.	8.	9.	D*	10.
11.4		Check that the components / relays mounted are not damaged. damage of any missing items to reported.	C	VISUAL	100%	PACKING LIST AND BOM		SITE REGISTER		Counter check by NTPC
11.5		Check the doors are operating properly and keys are available.	C	VISUAL	100%	VISUAL, PACKING LIST AND BOM		SITE REGISTER		No damage to panels acceptable, if any damage complaint to transport insurance agency and supplier.
11.6		Check for loose wires	C	VISUAL	100%	VISUAL, PACKING LIST AND BOM		SITE REGISTER		Check up with wiring drawing about loose wires loose left tree. counter check by NTPC.
11.7		Check if gaskets are proper and no damage or missing.	C	VISUAL	100%	VISUAL, PACKING LIST AND BOM		SITE REGISTER		No damage and missing gaskete are acceptable and complaint to suppliers. Counter check by NTPC.
11.8		Check if indicating bulbs and fuses are received.	C	VISUAL	100%	VISUAL, PACKING LIST AND BOM		SITE REGISTER		

INDICATIVE FIELD QUALITY PLAN

		LEGEND: * RECORDS, INDENTIFIED WITH "TICK" (√) SHALL BE ESSENTIALLY INCLUDED BY SUPPLIER IN QA DOCUMENTATION. **LEGEND TO BE USED: CLASS # : A = CRITICAL, B=MAJOR, C=MINOR; 'A'** SHALL BE WITNESSED BY NTPC FQA, **'B'** SHALL BE WITNESSED BY NTPC ERECTION / CONSTRUCTION DEPTT. AND **'C'** SHALL BE WITNESSED BY MAIN SUPPLIER (A & B CHECK SHALL BE NTPC CHP STAGE)		DOC. NO.: REV……
MANUFACTURER/ SUB-SUPPLIER	MAIN-SUPPLIER		FOR NTPC USE	REVIEWED BY / APPROVED BY / APPROVAL SEAL
SIGNATURE				

SUPPLIER'S LOGO	SUPPLIER'S NAME AND ADDRESS	INDICATIVE FIELD QUALITY PLAN	PROJECT :
		ITEM : SWITCHYARD SUB-SYSTEM:	QP NO.: REV. NO.: DATE: PAGE: …. OF….	PACKAGE : CONTRACT NO. : MAIN-SUPPLIER:

SL. NO	ACTIVITY AND OPERATION	CHARACTERISTICS / INSTRUMENTS	CLASS# OF CHECK	TYPE OF CHECK	QUANTUM OF CHECK	REFERENCE DOCUMENT	ACCEPTANCE NORMS	FORMAT OF RECORD		REMARKS
1.	2.	3.	4.	5.	6.	7.	8.	9.	D*	10.
11.9		Check glass / relays / instruments are in tack.	C	VISUAL	100%	VISUAL, PACKING LIST AND BOM		SITE REGISTER		
	STORAGE :									
11.1		Check panels are properly packed.	B	VISUAL	100%	MFGRS. INSTRUCTION MANUAL		SITE REGISTER		
11.11		Check panels are kept as per supplier's recommendation	B	VISUAL	100%	MFGRS. INSTRUCTION MANUAL				
11.12		Check panels are kept safely	C	VISUAL	100%	MFGRS. INSTRUCTION MANUAL				
11.13		Check panels are kept above the ground as per supplier's recommendations.	B	VISUAL	100%	MFGRS. INSTRUCTION MANUAL				
11.14		Check panels are kept away from vehicle moving area and easily accessible for shipments.	B	VISUAL	100%	MFGRS. INSTRUCTION MANUAL		--DO--		
	ERECTION:									
11.15		Check foundation / ground level	B	VISUAL	100%	APPROVED DRAWINGS AND LAYOUT DRG.		SITE REGISTER		
11.16		Check holes / foundations bolts provided as per the civil drawing and panel drawing.	B	VISUAL	100%	APPROVED DRAWINGS AND LAYOUT DRG.		SITE REGISTER		

INDICATIVE FIELD QUALITY PLAN

		LEGEND: * RECORDS, INDENTIFIED WITH "TICK" (√) SHALL BE ESSENTIALLY INCLUDED BY SUPPLIER IN QA DOCUMENTATION. **LEGEND TO BE USED: CLASS # : A = CRITICAL, B=MAJOR, C=MINOR;** **'A'** SHALL BE WITNESSED BY NTPC FQA, **'B'** SHALL BE WITNESSED BY NTPC ERECTION / CONSTRUCTION DEPTT. AND **'C'** SHALL BE WITNESSED BY MAIN SUPPLIER (A & B CHECK SHALL BE NTPC CHP STAGE)		DOC. NO.: REV……
MANUFACTURER/ SUB-SUPPLIER	MAIN-SUPPLIER		FOR NTPC USE	REVIEWED BY / APPROVED BY / APPROVAL SEAL
SIGNATURE				

SUPPLIER'S LOGO	SUPPLIER'S NAME AND ADDRESS	INDICATIVE FIELD QUALITY PLAN		PROJECT :
		ITEM : SWITCHYARD	QP NO.:	PACKAGE :
		SUB-SYSTEM:	REV. NO.:	CONTRACT NO. :
			DATE:	MAIN-SUPPLIER:
			PAGE: …. OF….	

SL. NO	ACTIVITY AND OPERATION	CHARACTERISTICS / INSTRUMENTS	CLASS# OF CHECK	TYPE OF CHECK	QUANTUM OF CHECK	REFERENCE DOCUMENT	ACCEPTANCE NORMS	FORMAT OF RECORD		REMARKS
1.	2.	3.	4.	5.	6.	7.	8.	9.	D*	10.
11.17		Check that panels are in level & in line	B	VISUAL	100%	VISUAL		SITE REGISTER		
11.18		Check panels are bolted properly	C	VISUAL	100%	VISUAL		SITE REGISTER		
11.19		Check that no damage to panel will take place during erection.	C	VISUAL	100%	VISUAL		SITE REGISTER		
11.20		Check provision for cable entry from tray upto panel.	C	VISUAL	100%	VISUAL		SITE REGISTER		Panel wiring to be done at site so that connection traceability is proper and panel does not look shabby
12	MARSHALLING BOX / JUNCTION BOX		C	VISUAL				SITE REGISTER		
	RECEIPT :									
12.1		Check for external damage to packing	C	VISUAL	100%	PACKING LIST AND BOM		SITE REGISTER		No physical damage. If pkg. extremely damaged take odc endorse LR/RRlodge claim.

INDICATIVE FIELD QUALITY PLAN

		LEGEND: * RECORDS, INDENTIFIED WITH "TICK" (√) SHALL BE ESSENTIALLY INCLUDED BY SUPPLIER IN QA DOCUMENTATION. **LEGEND TO BE USED: CLASS # : A = CRITICAL, B=MAJOR, C=MINOR; 'A'** SHALL BE WITNESSED BY NTPC FQA, **'B'** SHALL BE WITNESSED BY NTPC ERECTION / CONSTRUCTION DEPTT. AND **'C'** SHALL BE WITNESSED BY MAIN SUPPLIER (A & B CHECK SHALL BE NTPC CHP STAGE)		DOC. NO.:		REV……
MANUFACTURER/ SUB-SUPPLIER	MAIN-SUPPLIER		FOR NTPC USE			
SIGNATURE				REVIEWED BY	APPROVED BY	APPROVAL SEAL

SUPPLIER'S LOGO	SUPPLIER'S NAME AND ADDRESS	INDICATIVE FIELD QUALITY PLAN		PROJECT :
		ITEM : SWITCHYARD	QP NO.:	PACKAGE :
		SUB-SYSTEM:	REV. NO.:	CONTRACT NO. :
			DATE:	MAIN-SUPPLIER:
			PAGE: …. OF….	

SL. NO	ACTIVITY AND OPERATION	CHARACTERISTICS / INSTRUMENTS	CLASS# OF CHECK	TYPE OF CHECK	QUANTUM OF CHECK	REFERENCE DOCUMENT	ACCEPTANCE NORMS	FORMAT OF RECORD		REMARKS
1.	2.	3.	4.	5.	6.	7.	8.	9.	D*	10.
12.2		Check for the quantity general appearance physical condition and paint work. no rust on MKs and JB's when material is received at site	C	VISUAL	100%	PACKING LIST AND BOM		SITE REGISTER		No physical damage. If pkg. extremely damaged take odc endorse LR/RRlodge claim.
12.3		Check that all required mountings have been properly mounted, ensure that the items not mounted are received as loose supply.	C	VISUAL	100%	PACKING LIST AND BOM		SITE REGISTER		
12.4		Check that the terminal blocks / terminals are not damaged.	C	VISUAL	100%	PACKING LIST AND BOM		SITE REGISTER		
12.5		Check that necessary cable glands if called for, have been lifted or received loose along with required quantity of inter connecting cables.	C	VISUAL	100%	PACKING LIST AND BOM		SITE REGISTER		
12.6		Check the doors are operating and are properly lockable and that keys are available	C	VISUAL	100%	PACKING LIST AND BOM		SITE REGISTER		
12.7		Check that the heater, illuminating lamp and their wiring are intact wherever provided.	C	VISUAL	100%	PACKING LIST AND BOM		SITE REGISTER		

INDICATIVE FIELD QUALITY PLAN

		LEGEND: * RECORDS, INDENTIFIED WITH "TICK" (√) SHALL BE ESSENTIALLY INCLUDED BY SUPPLIER IN QA DOCUMENTATION. LEGEND TO BE USED: CLASS # : A = CRITICAL, B=MAJOR, C=MINOR; 'A' SHALL BE WITNESSED BY NTPC FQA, 'B' SHALL BE WITNESSED BY NTPC ERECTION / CONSTRUCTION DEPTT. AND 'C' SHALL BE WITNESSED BY MAIN SUPPLIER (A & B CHECK SHALL BE NTPC CHP STAGE)		DOC. NO.:		REV……
MANUFACTURER/ SUB-SUPPLIER	MAIN-SUPPLIER		FOR NTPC USE			
SIGNATURE				REVIEWED BY	APPROVED BY	APPROVAL SEAL

SUPPLIER'S LOGO	SUPPLIER'S NAME AND ADDRESS	INDICATIVE FIELD QUALITY PLAN		PROJECT :
		ITEM : SWITCHYARD	QP NO.:	PACKAGE :
		SUB-SYSTEM:	REV. NO.:	CONTRACT NO. :
			DATE:	MAIN-SUPPLIER:
			PAGE: …. OF….	

SL. NO	ACTIVITY AND OPERATION	CHARACTERISTICS / INSTRUMENTS	CLASS# OF CHECK	TYPE OF CHECK	QUANTUM OF CHECK	REFERENCE DOCUMENT	ACCEPTANCE NORMS	FORMAT OF RECORD		REMARKS
1.	2.	3.	4.	5.	6.	7.	8.	9.	D*	10.
12.8		Check for gasketing is proper or missing. Check any glass items (fragile) broken/missing. Check relays, instruments, gauges, meters etc. are in their position.	C	VISUAL	100%	PACKING LIST AND BOM		SITE REGISTER		
	STORAGE :									
12.9		Check that marshalling boxes / junction boxes are stored in a place protected from dirt, dust and ingress of moisture.	B	VISUAL	100%	MFGRS. INSTRUCTION MANUAL.		--DO--		
12.10		Check that marshalling boxes / junction boxes are kept in packed condition or atleast covered with polythene covers	B	VISUAL	100%	MFGRS. INSTRUCTION MANUAL.		--DO--		
	ERECTION :									
12.11		To erect in foundation with proper size of foundation bolts with nut and washer. erection in vertical portion & as per drawing.	B	VISUAL	100%	MFGRS. INSTRUCTION MANUAL IF ANY OR APPROVED DRAWING.		--DO--		
		Correct placement, alignment & levelling of MBs.								

INDICATIVE FIELD QUALITY PLAN

		LEGEND: * RECORDS, INDENTIFIED WITH "TICK" (√) SHALL BE ESSENTIALLY INCLUDED BY SUPPLIER IN QA DOCUMENTATION. LEGEND TO BE USED: CLASS # : A = CRITICAL, B=MAJOR, C=MINOR; 'A' SHALL BE WITNESSED BY NTPC FQA, 'B' SHALL BE WITNESSED BY NTPC ERECTION / CONSTRUCTION DEPTT. AND 'C' SHALL BE WITNESSED BY MAIN SUPPLIER (A & B CHECK SHALL BE NTPC CHP STAGE)		DOC. NO.: REV……
MANUFACTURER/ SUB-SUPPLIER	MAIN-SUPPLIER		FOR NTPC USE	REVIEWED BY / APPROVED BY / APPROVAL SEAL
SIGNATURE				

SUPPLIER'S LOGO	SUPPLIER'S NAME AND ADDRESS	INDICATIVE FIELD QUALITY PLAN		PROJECT :
		ITEM : SWITCHYARD	QP NO.:	PACKAGE :
		SUB-SYSTEM:	REV. NO.:	CONTRACT NO. :
			DATE:	MAIN-SUPPLIER:
			PAGE: …. OF….	

SL. NO	ACTIVITY AND OPERATION	CHARACTERISTICS / INSTRUMENTS	CLASS# OF CHECK	TYPE OF CHECK	QUANTUM OF CHECK	REFERENCE DOCUMENT	ACCEPTANCE NORMS	FORMAT OF RECORD		REMARKS
1.	2.	3.	4.	5.	6.	7.	8.	9.	D*	10.
		Proper sealing & tightness of MB base plates.								
		Proper sealing & locking arrangement of door.								

INDICATIVE FIELD QUALITY PLAN

		LEGEND: * RECORDS, INDENTIFIED WITH "TICK" (√) SHALL BE ESSENTIALLY INCLUDED BY SUPPLIER IN QA DOCUMENTATION. **LEGEND TO BE USED: CLASS # : A = CRITICAL, B=MAJOR, C=MINOR; 'A'** SHALL BE WITNESSED BY NTPC FQA, **'B'** SHALL BE WITNESSED BY NTPC ERECTION / CONSTRUCTION DEPTT. AND **'C'** SHALL BE WITNESSED BY MAIN SUPPLIER (A & B CHECK SHALL BE NTPC CHP STAGE)		DOC. NO.:		REV……
MANUFACTURER/ SUB-SUPPLIER	MAIN-SUPPLIER		FOR NTPC USE			
SIGNATURE				REVIEWED BY	APPROVED BY	APPROVAL SEAL

MFGR.'s LOGO	MANUFACTURER'S NAME AND ADDRESS	INDICATIVE MANUFACTURING QUALITY PLAN		PROJECT :
		ITEM : LT SWITCHGEAR	QP NO.:	PACKAGE :
		SUB-SYSTEM: LT	REV.NO.:	CONTRACT NO. :
			DATE:	MAIN-SUPPLIER:
			PAGE: …. OF….	

SL. NO	COMPONENT & OPERATIONS	CHARACTERISTICS	CLASS	TYPE OF CHECK	QUANTUM OF CHECK		REFERENCE DOCUMENT	ACCEPTANCE NORMS	FORMAT OF RECORD	AGENCY			REMARKS
					M	C / N				M	C	N	
1.	2.	3.	4.	5.	6.		7.	8.	9.	D *	** 10.		11.
A	RAW MATERIAL												
1	Angles, channels & Sheet Steel for fabrication (CRCA / HR)	1) Thickness	Major	Meas	1 Sample of each type & size per lot	-	IS-513, IS-1079, IS 2062	NTPC Specification	QC Records/ supplier TC		P	-	-	
		2) Surface finish & check for waviness / flatness	Major	Visual	-do-	-	IS-513, IS-1079, IS 2062	Mfr Std/Drg	QC record/ Supplier TC		P	-	-	
		3) Bending Test	Major	Mech	Sample	-	IS-513, IS-1079, IS 2062	IS-513, IS-1079, IS 2062	Supplier TC		V	-	-	
2.	Busbars – Aluminium & Copper	1) Dimensions	Major	Meas.	1 Sample of each type & size per lot	-	IS-5082 (for Al) IS1897 & IS 613 (for Cu), NTPC Approved Drgs. / data shee	IS-5082 (for Al) IS1897 & IS 613 (for Cu), NTPC Approved Drgs. / data shee	QC record/ Supplier TC	-	P	-	-	
		2) Surface finish	Major	Visual	-do-	-	IS-5082 (for Al) IS1897 IS 613 (for Cu),	IS-5082 (for Al) IS1897 IS 613 (for Cu)	QC Record	-	P	-	-	
		c) Conductivity	Major	Electrical	As per IS	-	IS-5082 (for Al) IS1897 IS 613 (for Cu)	IS-5082 (for Al) IS1897 IS 613 (for Cu)	QC Records/ supplier TC		P	-	-	

				DOC. NO.:	REV…… CAT…..	
MANUFACTURER/ SUB-SUPPLIER	MAIN-SUPPLIER	**LEGEND:** * RECORDS, INDENTIFIED WITH "TICK" (√) SHALL BE ESSENTIALLY INCLUDED BY SUPPLIER IN QA DOCUMENTATION. ** **M:** MANUFACTURER/SUB-SUPPLIER **C:** MAIN SUPPLIER, **N**: NTPC **P:** PERFORM **W**: WITNESS AND **V:** VERIFICATION. AS APPROPRIATE, **CHP:** NTPC SHALL IDENTIFY IN COLUM "N" AS ' W"	FOR NTPC USE			
SIGNATURE				REVIEWED BY	APPROVED BY	APPROVAL SEAL

MFGR.'s LOGO	MANUFACTURER'S NAME AND ADDRESS	INDICATIVE MANUFACTURING QUALITY PLAN		PROJECT :
		ITEM : LT SWITCHGEAR	QP NO.:	PACKAGE :
		SUB-SYSTEM: LT	REV.NO.:	CONTRACT NO. :
			DATE:	MAIN-SUPPLIER:
			PAGE: …. OF….	

SL. NO	COMPONENT & OPERATIONS	CHARACTERISTICS	CLASS	TYPE OF CHECK	QUANTUM OF CHECK		REFERENCE DOCUMENT	ACCEPTANCE NORMS	FORMAT OF RECORD	AGENCY			REMARKS
					M	C / N				M	C	N	
1.	2.	3.	4.	5.	6.		7.	8.	9.	D *	** 10.		11.
B	**Bought out items : (For Makes refer Note # 1)**												
1	Air Circuit Breaker	1) Type & Rating	Major	Visual	100%	-	IS-13947 Part 2/ NTPC approved drg. / Data sheet	IS-13947 Part 2/ NTPC approved drg. / Data sheet	QC record	-	P	-	-	
		2) All routine tests including calibration of releases	Critical	Tests	-do-	-	IS-13947 Part 2/ NTPC approved drg. & Data sheet	IS-13947 Part 2/ NTPC approved drg. & Data sheet	Mfr.'s Compliance TC		V	V	V	
2	CT's	1) Overall dimensions & mounting arrangement	Major	Meas.	10% of each type & rating per lot	-	Mfr drg. / NTPC Spec	Mfr drg. / NTPC Spec	QC Record / Supplier TC		P	-	-	
		2) Type & Rating	Major	Visual	-do-	10% of each type & rating per lot	NTPC App. Drg. & data sheet	NTPC App. Drg. & data sheet	QC Record		P	-	-	
		3) All routine tests as per IS 2705	Critical	Electrical	100%	100%	IS 2705	IS 2705	Supplier's TC		V	V	V	
3	PT's	1. Overall dimensions & mounting arrangement	Major	Meas.	10% of each type	-	Mfg Drg.	Mfr. Drg.	QC Record/Supplier's TC		P	-	-	
		2) Type & Rating	Major	Visual	-do-	10% of each type & rating per lot	NTPC Appd. Drg/ Data sheet	NTPC app. Drg/Data sheet	QC Record/Supplier's TC		P	V		

		LEGEND: * RECORDS, INDENTIFIED WITH "TICK" (√) SHALL BE ESSENTIALLY INCLUDED BY SUPPLIER IN QA DOCUMENTATION. ** **M:** MANUFACTURER/SUB-SUPPLIER **C:** MAIN SUPPLIER, **N**: NTPC **P:** PERFORM **W**: WITNESS AND **V:** VERIFICATION. AS APPROPRIATE, **CHP:** NTPC SHALL IDENTIFY IN COLUM "N" AS ' W"		DOC. NO.: REV…… CAT…..
MANUFACTURER/ SUB-SUPPLIER	MAIN-SUPPLIER		FOR NTPC USE	REVIEWED BY / APPROVED BY / APPROVAL SEAL
SIGNATURE				

MFGR.'s LOGO	MANUFACTURER'S NAME AND ADDRESS	INDICATIVE MANUFACTURING QUALITY PLAN		PROJECT :
		ITEM : LT SWITCHGEAR	QP NO.:	PACKAGE :
		SUB-SYSTEM: LT	REV.NO.:	CONTRACT NO. :
			DATE:	MAIN-SUPPLIER:
			PAGE: …. OF….	

SL. NO	COMPONENT & OPERATIONS	CHARACTERISTICS	CLASS	TYPE OF CHECK	QUANTUM OF CHECK		REFERENCE DOCUMENT	ACCEPTANCE NORMS	FORMAT OF RECORD	AGENCY			REMARKS
					M	C / N				M	C	N	
1.	2.	3.	4.	5.	6.		7.	8.	9.	D *	** 10.		11.
		3) All routine tests as per IS 3156 (92)	Critical	Electrical	100%	100%	IS 3156	IS 3156	Supplier's TC		V	V	V	
4	AC / DC Power & aux. Contactors	1) Type & Rating	Major	Visual	5 sample of each type, make & rating per lot	-	IS-13947 Part 4 sec 1, NTPC appd. drg & Data sheet	IS-13947 Part 4 sec 1, NTPC appd. drg & Data sheet	QC Record/ Swbd TC		P	-	-	
5	Air Air Break switches / Fuse Switch units	1) Type & Rating	Major	Visual	5 sample of each type, make & rating per lot	-	IS-13947 Part 3 , NTPC appd. drg & Data sheet	IS-13947 Part 3 , NTPC appd. drg & Data sheet	QC Record/ Swbd TC		P	-	-	
6	Timers	1) Type & Rating	Major	Visual	10% of each type, & rating per lot	-	NTPC App. Drg. & data sheet	NTPC App. Drg. & data sheet	QC Record		P	-	-	
		2) Compact configuration	Major	Electricazl	-do	-	-do-	-do-	Reg/Sheet		P	-	-	
7	HRC Fuses	1) Type & Rating	Major	Visual	10% of each rating per lot	-	Makes as per LOA / Endorsement sheet IS-13703 / NTPC App. Drgs	NTPC Appd. Drgs.	Swbd TC		P	-	-	
8	Indicating Instruments	1) Type & Ratings (Calibration report to be verified)	Major	Visual	10% of each rating per lot	10% of each rating per lot	NTPC Appd Drg/ Data sheet	NTPC Appd drg/ data sheet	Supplier's TC		P	V		

		LEGEND: * RECORDS, INDENTIFIED WITH "TICK" (√) SHALL BE ESSENTIALLY INCLUDED BY SUPPLIER IN QA DOCUMENTATION. ** **M:** MANUFACTURER/SUB-SUPPLIER **C:** MAIN SUPPLIER, **N:** NTPC **P:** PERFORM **W:** WITNESS AND **V:** VERIFICATION. AS APPROPRIATE, **CHP:** NTPC SHALL IDENTIFY IN COLUM "N" AS ' W"	एनटीपीसी NTPC	DOC. NO.:	REV…… CAT…..	
MANUFACTURER/ SUB-SUPPLIER	MAIN-SUPPLIER		FOR NTPC USE			
SIGNATURE				REVIEWED BY	APPROVED BY	APPROVAL SEAL

		b) Finish & workmanship	Minor	Visual	Sample	-	Compliance to standard Engg. Norms & free from surface defects		-		P	-	-	

SL. NO	COMPONENT & OPERATIONS	CHARACTERISTICS	CLASS	TYPE OF CHECK	QUANTUM OF CHECK		REFERENCE DOCUMENT	ACCEPTANCE NORMS	FORMAT OF RECORD	AGENCY			REMARKS
					M	C / N				M	C	N	
1.	2.	3.	4.	5.	6.		7.	8.	9.	D *	** 10.		
		2) Routine tests including calibration & accuracy test reports	Major	Electrical	100%	100%	IS 1248 , NTPC Appr .drg / data sheet	IS 1248 , NTPC Appr .drg / data sheet	Supplier's test report		V	V	V	
9	KWH Meters	1) Type & Ratings	Major	Visual	10% of each type & rating per lot	10% of each type & rating per lot	NTPC Appr .drg / data sheet	NTPC Appr .drg / data sheet	QC Records		P	V	-	
		2) Routine tests including calibration & accuracy test report	Major	Electrical	100%	100%	IS 722 & IS 13779 , 13010 & NTPC Appr .drg / data sheet	IS 722 & IS 13779 , 13010 & NTPC Appr .drg / data sheet	Supplier' test report		V	V	V	
10	Transducers	1) Type & Ratings	Major	Visual	10% of each type & rating per lot	10% of each type & rating per lot	NTPC Appr .drg / data sheet	NTPC Appr .drg / data sheet	QC Records		P	V	-	
		2) Routine tests including calibration & accuracy test reports	Major	Electrical	100%	100%	IS 12784 & NTPC Appr .drg / data sheet	IS 12784 & NTPC Appr .drg / data sheet	Supplier's test report		V	V	V	

MFGR.'s LOGO	MANUFACTURER'S NAME AND ADDRESS	INDICATIVE MANUFACTURING QUALITY PLAN		PROJECT :
		ITEM : LT SWITCHGEAR	QP NO.:	PACKAGE :
		SUB-SYSTEM: LT	REV.NO.:	CONTRACT NO. :
			DATE:	MAIN-SUPPLIER:
			PAGE: …. OF….	

SL. NO	COMPONENT & OPERATIONS	CHARACTERISTICS	CLASS	TYPE OF CHECK	QUANTUM OF CHECK		REFERENCE DOCUMENT	ACCEPTANCE NORMS	FORMAT OF RECORD	AGENCY			REMARKS
					M	C / N				M	C	N	
1.	2.	3.	4.	5.	6.		7.	8.	9.	D *	** 10.		11.
11	Push Button	1) Type, Color & Ratings	Major	Visual	5 samples of each type & rating per lot	-	IS 13947 Part 5 sec1 NTPC App. Drg. & data shee	IS 13947 Part 5 sec1 NTPC App. Drg. & data shee	QC Record		P	-	-	
12	IEC 61850 compliant Numerical Relays	1)Type & Rating	Major	Visual	100%	10% of each type, & rating per lot	NTPC appd drg & data sheet	NTPC appd drg & data sheet	QC Records		V	-	-	
		2) Routine test certificate	Major	Electrical	100%	100%	IEC 60255 / IEC 61850 Relay Mfr's Specifications	IEC 60255 / IEC 61850 Relay Mfr's Specifications	Supplier's TC	-	V	V	V	
		3) Numerical Relay Testing	Major	Electrical	10% of each type, & rating per lot	10% of each type, & rating per lot	As per Approved test procedure No. 9548-206-QVEQ-005	As per Approved test procedure No. 9548-206-QVEQ-005	Procedure No. 9548-206-QVEQ-005	-	P	W	W	
13	Control & Selector Switches	1) Type & Rating	Major	Visual	5 samples of each type & rating per lot	-	IS 13947 Part 5 sec1 NTPC App. Drg. & data sheet	IS 13947 Part 5 sec1 NTPC App. Drg. & data sheet	QC Records	-	P	-	-	
		2Contact configuration check	Major	Visual	Do	Do	Do	Do	Do	-	P	-	-	

MANUFACTURER/ SUB-SUPPLIER	MAIN-SUPPLIER	**LEGEND:** * RECORDS, INDENTIFIED WITH "TICK" (√) SHALL BE ESSENTIALLY INCLUDED BY SUPPLIER IN QA DOCUMENTATION. ** **M:** MANUFACTURER/SUB-SUPPLIER **C:** MAIN SUPPLIER, **N**: NTPC **P:** PERFORM **W**: WITNESS AND **V:** VERIFICATION. AS APPROPRIATE, **CHP:** NTPC SHALL IDENTIFY IN COLUM "N" AS ' W"	FOR NTPC USE	DOC. NO.:	REV…… CAT…..	
SIGNATURE				REVIEWED BY	APPROVED BY	APPROVAL SEAL

MFGR.'s LOGO	MANUFACTURER'S NAME AND ADDRESS	INDICATIVE MANUFACTURING QUALITY PLAN		PROJECT :
		ITEM : LT SWITCHGEAR	QP NO.:	PACKAGE :
		SUB-SYSTEM: LT	REV.NO.:	CONTRACT NO. :
			DATE:	MAIN-SUPPLIER:
			PAGE: …. OF….	

SL. NO	COMPONENT & OPERATIONS	CHARACTERISTICS	CLASS	TYPE OF CHECK	QUANTUM OF CHECK		REFERENCE DOCUMENT	ACCEPTANCE NORMS	FORMAT OF RECORD	AGENCY			REMARKS
					M	C / N				M	C	N	
1.	2.	3.	4.	5.	6.		7.	8.	9.	D *	** 10.		11.
14	Overload relay with SPPR facility & Heavy duty starting overload relay	1) Type & Rating	Major	Visual	10% of each type & rating per lot	-	IS-3231 NTPC appd. drg & data sheet	IS-3231 NTPC appd. drg & data sheet	QC Records / Swbd TC		P	-	-	
		2)Routine tests	Major	Electrical	-do-	-	Do		-		P	-	-	
15	Coupling relays	1) Type & Rating	Major	Visual	10% of each type per lot		IS-3231, NTPC appd. drg & data sheet	IS-3231, NTPC appd. drg & data sheet	QC Records		P	-	-	
16	MCB	1) Type & Rating	Major	Visual	-do-	-	IS-8828 & NTPC appd. drg	IS-8828 & NTPC appd. drg	QC Records		P	-	-	
17	Control Transformer	1) Type & Rating	Major	Visual	100%	`	NTPC Appd drg/data sheet	NTPC appd drg/data sheet	QC Records		P	-	-	
18	Insulating barriers & shrouds – (Fire retardant type)	1) Dimensions including thickness check and HV test.	Major	Electrical	5 sample of each type per lot	-	Mfr drg	2.5 KV for 1 min	QC Record		P	-	-	
		2) Flame Resistance	Major	Flame Test	Sampling as per Mfr. Std.	-	IS 6746	IS 6746	-do-		P	V	V	

MANUFACTURER/ SUB-SUPPLIER	MAIN-SUPPLIER	LEGEND: * RECORDS, INDENTIFIED WITH "TICK" (√) SHALL BE ESSENTIALLY INCLUDED BY SUPPLIER IN QA DOCUMENTATION. ** M: MANUFACTURER/SUB-SUPPLIER C: MAIN SUPPLIER, N: NTPC P: PERFORM W: WITNESS AND V: VERIFICATION. AS APPROPRIATE, CHP: NTPC SHALL IDENTIFY IN COLUM "N" AS ' W"	FOR NTPC USE	DOC. NO.:	REV…… CAT…..	
SIGNATURE				REVIEWED BY	APPROVED BY	APPROVAL SEAL

		c) Eccentricity of insulation & ovality of core	Major	Physical	Sample	-	IEC 60840	IEC 60840	Reg/Sheet		P	-	-	

SL. NO	COMPONENT & OPERATIONS	CHARACTERISTICS	CLASS	TYPE OF CHECK	QUANTUM OF CHECK		REFERENCE DOCUMENT	ACCEPTANCE NORMS	FORMAT OF RECORD	AGENCY			REMARKS
					M	C / N				M	C	N	
1.	2.	3.	4.	5.	6.		7.	8.	9.	D *	** 10.		11.
19	Busbar Support Insulator	1) Dimension	Major	Meas.	Each setting	-	5 sample of each type per lot	5 sample of each type per lot	QC Records		P	V	V	Insulators to preferably have Batch Identification
		2) Finish	Major	Visual	-do	-do-	No visual defects	No visual defects	QC Records		P	V	V	
		3) Comparative Tracking Index check	Major	Electrical	1 Sample per lot	-	IS 2824	IS 2824	QC Records		P	V	V	
		4) HV Test	Major	Electrical	-do-	-	BS-2782/IS-8623	2.5 KV for 1 Min	-do-		P	V	V	
		5) IR Test	Major	Electrical	Do	-	-do-	BS-2782/IS-8623	-do-		P	V	V	
		6) Flexural strength test	Critical	Mech.	Do	-	BS-2782	BS 2782	Supplier's TC		V	V	V	
20	Synthetic rubber Gasket / Neoprene rubber gasket	1) Material Type	Major	Visual	Supplier's std	Supplier's std	NTPC spec & IS 11149 / L&T's drgs	NTPC spec & IS 11149 / L&T's drgs	Supplier 's Conformance Report		V	-	--	Type, Dimensions & profile of the gaskets should be same as type tested panel gaskets

MFGR.'s LOGO	MANUFACTURER'S NAME AND ADDRESS	INDICATIVE MANUFACTURING QUALITY PLAN		PROJECT :
		ITEM : LT SWITCHGEAR	QP NO.:	PACKAGE :
		SUB-SYSTEM: LT	REV.NO.:	CONTRACT NO. :
			DATE:	MAIN-SUPPLIER:
			PAGE: …. OF….	

SL. NO	COMPONENT & OPERATIONS	CHARACTERISTICS	CLASS	TYPE OF CHECK	QUANTUM OF CHECK		REFERENCE DOCUMENT	ACCEPTANCE NORMS	FORMAT OF RECORD	AGENCY			REMARKS
					M	C / N				M	C	N	
1.	2.	3.	4.	5.	6.		7.	8.	9.	D *	** 10.		
		2) Dimensions, profile & Visual Inspection	Major	Meas.	-do-	-	L&T's drg	L&T's drg	QC Record		P	-	-	
		3) Shore Hardness	Critical	Test	1 Sample per lot	-	NTPC Spec & IS 11149, L&T Drg	NTPC Spec & IS 11149, L&T Drg	Supplier's TC / QC Record		P	V	V	
		4) Elongation at break & ageing	Major	Test	Mfr's std	Mfr's std	-do-	-do-	Supplier's TC		V	V	V	
		5) Compression Test	Critical	Test	-do-	-	-do-	-do-	-do-		V	V	V	
		6) Ozone Resistance Test	Major	Test	-do-	-	-do-	-do-	-do-		V	V	V	
21	PVC wires (HR FR Grade)	Verify size, colour and HR-FR Grade	Major	Visual	1 sample of each type & rating per lot	-	IS-694		QC Records/ Mfr's Test Report		P	-	-	
22	Space Heater, Thermostat, 3 pin socket, hooter	1) Dimension/ Mounting arrangement	Major	Meas	-do-	-	Purchase spec : Rated Voltage/Current/ wattage	Purchase spec : Rated Voltage/Current/ Wattage	-do-		P	-	-	

MANUFACTURER/ SUB-SUPPLIER	MAIN-SUPPLIER	LEGEND: * RECORDS, INDENTIFIED WITH "TICK" (√) SHALL BE ESSENTIALLY INCLUDED BY SUPPLIER IN QA DOCUMENTATION. ** M: MANUFACTURER/SUB-SUPPLIER C: MAIN SUPPLIER, N: NTPC P: PERFORM W: WITNESS AND V: VERIFICATION. AS APPROPRIATE, CHP: NTPC SHALL IDENTIFY IN COLUM "N" AS ' W"	FOR NTPC USE	DOC. NO.:	REV…… CAT…..	
SIGNATURE				REVIEWED BY	APPROVED BY	APPROVAL SEAL

MFGR.'s LOGO	MANUFACTURER'S NAME AND ADDRESS	INDICATIVE MANUFACTURING QUALITY PLAN		PROJECT :
		ITEM : LT SWITCHGEAR	QP NO.:	PACKAGE :
		SUB-SYSTEM: LT	REV.NO.:	CONTRACT NO. :
			DATE:	MAIN-SUPPLIER:
			PAGE: …. OF….	

SL. NO	COMPONENT & OPERATIONS	CHARACTERISTICS	CLASS	TYPE OF CHECK	QUANTUM OF CHECK		REFERENCE DOCUMENT	ACCEPTANCE NORMS	FORMAT OF RECORD	AGENCY			REMARKS
					M	C / N				M	C	N	
1.	2.	3.	4.	5.	6.		7.	8.	9.	D *	** 10.		11.
		2) Function Test	Major	Test	-do-	-	Mfr Std	Mfr. Std	QC Record		P	-	-	
23	ACB Handling trolley	Overall dimensions & functional checks	Major	Test	1 sample of each type & rating of first lot	1 sample of each type & rating of first lot	Mfr std/drg	Mfr std/drg	QC Record		P	V	V	
24	Terminal Block	Type & Rating	Major	Visual	5 sample of each type & rating per lot	-	NTPC Spec.	NTPC specification	QC Records		P	-	-	
25	Paint/Powder	Make, Type & Shelf life	Major	Visual	100%	-	Mfr std	Mfr. Std	-do-		P	-	-	
C	**IN-PROCESS**												
1.	Fabrication	1) Cutting, Punching, Shearing & Bending	Major	Meas.	Mfr. Practice	-	NTPC Approved GA Drg		QC Records		P	-	-	
		2) panel front door cut-outs punching	Major	Meas.	-do-	-	NTPC Approved GA Drg	NTPC Approved GA Drg	-do-		P	-	-	
2	Pretreatment & Painting (powder coating)	1) Pre treatment of sheet steel (all tanks)	Major	Process	-do-	Mfr Practice	Mfr Std practice , NTPC spec., IS-600	Mfr Std practice , NTPC spec., IS-600	-do-		P	-	-	
		2) Paint shade	Major	Visual	1 sample per lot	-	NTPC spec. approved drgs.	NTPC Spec. approved Drg. RAL std shade	QC Records		P	V	V	

MANUFACTURER/ SUB-SUPPLIER	MAIN-SUPPLIER	LEGEND: * RECORDS, INDENTIFIED WITH "TICK" (√) SHALL BE ESSENTIALLY INCLUDED BY SUPPLIER IN QA DOCUMENTATION. ** M: MANUFACTURER/SUB-SUPPLIER C: MAIN SUPPLIER, N: NTPC P: PERFORM W: WITNESS AND V: VERIFICATION. AS APPROPRIATE, CHP: NTPC SHALL IDENTIFY IN COLUM "N" AS ' W"	FOR NTPC USE	DOC. NO.:	REV…… CAT…..	
SIGNATURE				REVIEWED BY	APPROVED BY	APPROVAL SEAL

INDICATIVE MANUFACTURING QUALITY PLAN

SL. NO	COMPONENT & OPERATIONS	CHARACTERISTICS	CLASS	TYPE OF CHECK	QUANTUM OF CHECK M	QUANTUM OF CHECK C/N	REFERENCE DOCUMENT	ACCEPTANCE NORMS	FORMAT OF RECORD	AGENCY M	AGENCY C	AGENCY N	REMARKS
1.	2.	3.	4.	5.	6.		7.	8.	9.	D *	** 10.		
							card						
		f) Outer sheath thickness	Major	Physical			Approved data sheet	Approved data sheet	-do-		P	W	W
		g) Hot set test for insulation	Major	Physical			IEC 60540	IEC 60540	-do-		P	W	W
		3) Paint Thickness & Adhesion	Major	Meas. & test	Mfr practices	-	-do-		-do-		P	-	-
		4) Salt spray test	Major	Meas. & test	1 sample per year		Mfr practice	Mfr Practice	-do-		P	V	V
3	Panel Assembly	1) Panel shell assembly, Top &back cover assembly, Panel door assembly, hinge fitting & door knob fitting etc.	Major	Process	100%	-	Mfr Internal Drgs made to meet NTPC Appd.Drgs.	Mfr Internal Drgs made to meet NTPC Appd. Drgs.	-do-		P	-	-
		2) Size of busbar & busbar finish	Major	Process	100%	-	-do-	-do-	-do-		P	-	-
		3) Colour coding of busbar	Major	Process	100%	-	-do-	-do-	-do-		P	-	-
		4) Insulator type & mounting	Major	Process	100%	-	-do-	-do-	-do-		P	-	-
		5) Busbar support distance & tightness of bolts for Main bus bars and bus bar joints	Major	Process	100%	-	Size KGM M8 0.85 M10 1.88 M12 3.2	Size KGM M8 0.85 M10 1.88 M12 3.2	-do-		P	-	-

SL. NO	COMPONENT & OPERATIONS	CHARACTERISTICS	CLASS	TYPE OF CHECK	QUANTUM OF CHECK		REFERENCE DOCUMENT	ACCEPTANCE NORMS	FORMAT OF RECORD	AGENCY				REMARKS
		6) Main , Control & Auxiliary Busbar Clearances	Major	Process	100%	-	-do-	-do-	QC Records		P	-	-	
		6) Main , Control & Auxiliary Busbar Clearances	Major	Process	100%	-	-do-	-do-	QC Records		P	-	-	
		7) Tin / silver plating / bimetallic strip /washer between Cu & Al joints	Major	Process	100%	-	-do-	-do-	QC Records		P	-	-	
		8) CT / PT mounting arrangement & tightness	Major	Process	100%	-	-do-	-do-	-do-		P	-	-	
		9) Termination for power & control circuits	Major	Process	100%	-	-do-	-do-	-do-		P	-	-	
		10) Lug size & crimping quality	Major	Process	100%	-	Mfr Internal Drgs made to meet NTPC Appd. Drgs.	Mfr Internal Drgs made to meet NTPC Appd. Drgs.	QC Records		P	-	-	
		11) Earthing busbar size & continuity ; earthing of panel & door	Major	Process	100%	-	-do-	-do-	QC Records		P	-	-	
		12) Breaker safety shutter operation	Major	Process	100%	-	-do-	-do-	QC Records		P	-	-	
		13) Spring loaded power & control contacts alignment	Major	Process	100%	-	-do-	-do-	QC Records		P	-	-	
4	Module assembly	1) Component identification	Major	Process	100%	-	-do-	-do-	QC Records		P	-	-	

SL. NO	COMPONENT & OPERATIONS	CHARACTERISTICS	CLASS	TYPE OF CHECK	QUANTUM OF CHECK		REFERENCE DOCUMENT	ACCEPTANCE NORMS	FORMAT OF RECORD	AGENCY				REMARKS
		2) Component layout, mounting & dimensions	Major	Process	100%	-	-do-	-do-	QC Records		P	-	-	
		3) Incoming & outgoing power & control contacts assembly & alignment	Major	Process	100%	-	-do-	-do-	QC Records		P	-	-	
		4) Power circuit wire / strip termination & clearances	Major	Process	100%	-	Mfr Internal Drgs/spec made to meet NTPC Appd. Drgs.	Mfr Internal Drgs /spec made to meet NTPC Appd. Drgs.	QC Records		p	-	-	
		5) Busbar joints	Major	Process	100%	-	-do-	-do-	QC Records		P	-	-	
		6) Functional Checks	Major	Process	100%	-	-do-	-do-	QC Records		P	-	-	
6	Control Wiring	1) Wire Size & lug size. Colour of wire	Minor	Visual	100%	-	NTPC apprd. Wiring diagram	NTPC apprd. Wiring diagram	QC Records		P	-	-	
		2) Proper wire Clamping & Ferruling	Minor	Visual	100%	-	Shop practice	Shop practice	QC Records		P	-	-	
		3) Continuity as per wiring drg	Critical	Test	Sample	-	NTPC Appr. Drg.	NTPC Appr. Drg.	QC Records		P	-	-	
		4) Tightness of termination & crimping check	Major	Test	100%	-	Mfr. Std	Mfr. Std	QC Records		P	-	-	
D	**Final Inspection**													
2		1. Overall visual check for aesthetics, verticality of panels and alignment	Major	Visual	100%	10%	Approved GA Drgs	Approved GA Drg.	TC		P	W	W	

SL. NO	COMPONENT & OPERATIONS	CHARACTERISTICS	CLASS	TYPE OF CHECK	QUANTUM OF CHECK		REFERENCE DOCUMENT	ACCEPTANCE NORMS	FORMAT OF RECORD	AGENCY				REMARKS
		between two transport sections												
		2. Verification of overall Dimensions Including sheet steel thickness	Major	Meas.	100%	1 Sample of each type of panel/lot	Approved GA	Approved GA Drg.	TC		P	W	W	
		3)Busduct interface, phase sequence, flange dimensions & clearances	Major	Visual	100%	100%	NTPC appd Drg / NTPC Specification	NTPC appd Drg / NTPC Specification	TC		P	W	W	
		4. Busbar (Main –horizontal) – clearances, color coding, phase sequence identification for each transport unit	Critical	Meas. & Visual	100% Transport Units	10%	NTPC Appr. Drgs / NTPC Specification	NTPC Appr. Drgs / NTPC Specification	TC		P	W	W	
		5. Busbar support arrangement : centre – centre distance between supports	Major	Meas	100%	10%	NTPC accepted Type test reports	NTPC Appd Drgs/ NTPC spec.	TC		P	W	W	
		6. Overlapping of busbar joints	Major	Meas.	100%	10%	NTPC appd. Drgs	NTPC appd. Drgs	TC		P	W	W	
		7. Verification of tightness of busbar joints by torque wrench	Critical	Mech.	100%	10%	Size KGM M8 0.85 M10 1.88 M12 3.2	Size KGM M8 0.85 M10 1.88 M12 3.2	TC		P	W	W	
		8. CT /PT fixing & mounting arrangement	Major	Visual	100%	10%	NTPC Speci	NTPC Spec.	TC		P	W	W	

MFGR.'s LOGO	MANUFACTURER'S NAME AND ADDRESS	INDICATIVE MANUFACTURING QUALITY PLAN		PROJECT :
		ITEM : LT SWITCHGEAR	QP NO.:	PACKAGE :
		SUB-SYSTEM: LT	REV.NO.:	CONTRACT NO. :
			DATE:	MAIN-SUPPLIER:
			PAGE: …. OF….	

SL. NO	COMPONENT & OPERATIONS	CHARACTERISTICS	CLASS	TYPE OF CHECK	QUANTUM OF CHECK		REFERENCE DOCUMENT	ACCEPTANCE NORMS	FORMAT OF RECORD	AGENCY				REMARKS
		9. Check shrouding of accessible live parts , Cable supports and tool falling shroud in cable alley and application of PVC sleeves on busbars	Major	Visual	100%	Random	NTPC Spec	NTPC Spec.	TC		P	W	W	.
		10. Verification of Components for make, type, rating & layout	Major	Visual	100%	10% of each type of module per lot	Makes as per LOA / Endorsement Sheet Type, rating & Layout as per NTPC approved GA / scheme drg	Makes as per LOA / Endorsement Sheet Type, rating & Layout as per NTPC approved GA / scheme drg	TC		P	W	V	
		11. Check control wiring / terminal arrangement & ferruling	Major	Visual	100%	10% Same as above	NTPC apppd drg	NTPC Appd drg	TC		P	W	W	
		12. Safety Shutters operation check	Critical	Electrical	100%	10% Same as above	NTPC Specification	NTPC specification	TC		P	W	W	
		13. Check door interlock & defeat interlock & adlocking feature	Major	Electrical	100%	10% Same as above	NTPC Specification	NTPC specification	TC		P	W	W	

				DOC. NO.:	REV…… CAT…..	
MANUFACTURER/ SUB-SUPPLIER	MAIN-SUPPLIER	**LEGEND:** * RECORDS, INDENTIFIED WITH "TICK" (√) SHALL BE ESSENTIALLY INCLUDED BY SUPPLIER IN QA DOCUMENTATION. ** **M:** MANUFACTURER/SUB-SUPPLIER **C:** MAIN SUPPLIER, **N**: NTPC **P:** PERFORM **W**: WITNESS AND **V:** VERIFICATION. AS APPROPRIATE, **CHP:** NTPC SHALL IDENTIFY IN COLUM "N" AS ' W"	FOR NTPC USE			
SIGNATURE				REVIEWED BY	APPROVED BY	APPROVAL SEAL

MFGR.'s LOGO	MANUFACTURER'S NAME AND ADDRESS	INDICATIVE MANUFACTURING QUALITY PLAN		PROJECT :
		ITEM : LT SWITCHGEAR	QP NO.:	PACKAGE :
		SUB-SYSTEM: LT	REV.NO.:	CONTRACT NO. :
			DATE:	MAIN-SUPPLIER:
			PAGE: …. OF….	

SL. NO	COMPONENT & OPERATIONS	CHARACTERISTICS	CLASS	TYPE OF CHECK	QUANTUM OF CHECK		REFERENCE DOCUMENT	ACCEPTANCE NORMS	FORMAT OF RECORD	AGENCY				REMARKS
		14. Mech operation test for ACB as per IS	Critical	Electrical	100%	10 Same as above	IS 13947	IS 13947	TC		P	W	W	
		15. Breaker operation at service , test & isolate position	Critical	Electrical	100%	100%	IS 13947; NTPC appd drg	NTPC Spe;cification	TC		P	W	W	
		16. Power & control drawout contacts alignment check	Major	Electrical	100%	10% of each type of module per lot	NTPC Specification	NTPC Specification	TC		P	W	W	
		17. Check for Breaker antipumping & trip free feature	Major	Electrical	100%	100%	NTPC Specification	NTPC Specification	TC		P	W	W	
		18. Earthing of ACB Cradle	Major	Visual	100%	10%	NTPC Spec.	NTPC Spec.	TC		P	W	W	
		19. Interlocks & operation check: - elect. / mech - open, close: under test , service & isolation position	Critical	Electrical	100%	10% of each type of module per lot	Approved drgs & NTPC Specification	Approved drgs & NTPC Specification	TC		P	W	W	
		21. Earth bus dimensions, earthing of drawout modules, door etc.	Major	Electrical.	100%	10% of each type of module per lot	NTPC Appd GA Drg	NTPC Appd GA Drg	TC		P	W	W	

		LEGEND: * RECORDS, INDENTIFIED WITH "TICK" (√) SHALL BE ESSENTIALLY INCLUDED BY SUPPLIER IN QA DOCUMENTATION. ** **M:** MANUFACTURER/SUB-SUPPLIER **C:** MAIN SUPPLIER, **N**: NTPC **P:** PERFORM **W**: WITNESS AND **V:** VERIFICATION. AS APPROPRIATE, **CHP:** NTPC SHALL IDENTIFY IN COLUM "N" AS ' W"		DOC. NO.:	REV…… CAT…..	
MANUFACTURER/ SUB-SUPPLIER	MAIN-SUPPLIER		FOR NTPC USE			
SIGNATURE				REVIEWED BY	APPROVED BY	APPROVAL SEAL

MFGR.'s LOGO	MANUFACTURER'S NAME AND ADDRESS	INDICATIVE MANUFACTURING QUALITY PLAN		PROJECT :
		ITEM : LT SWITCHGEAR	QP NO.:	PACKAGE :
		SUB-SYSTEM: LT	REV.NO.:	CONTRACT NO. :
			DATE:	MAIN-SUPPLIER:
			PAGE: …. OF….	

SL. NO	COMPONENT & OPERATIONS	CHARACTERISTICS	CLASS	TYPE OF CHECK	QUANTUM OF CHECK		REFERENCE DOCUMENT	ACCEPTANCE NORMS	FORMAT OF RECORD	AGENCY				REMARKS
		22. Check Paint shade, thickness, Adhesion & finish	Major	Visual/Test	100% for shade & finish; 2 - 3 samples / lot for thickness & adhesion check	2 - 3 samples / board	NTPC approved drg. For shade Paint Thickness to be checked as per NTPC spec.	NTPC approved drg. For shade Paint Thickness to be checked as per NTPC spec.	TC		P	W	W	Paint adhesion check by cross hatch method using adhesive type
		23. draw in- draw out- draw-in of modules at random and check damages of fixed contacts and lyra contacts if any		Visual	Random	Random	No damages				P	W	W	
		24. Degree of protection check, check profile & fixing of gaskets	Major	Visual	2 - 5 samples at gasketted joints per board	2 - 5 samples at gasketted joints per board	NTPC approved drgs / NTPC Specification	No insertion possible from openings & gasketted joints	TC		P	W	W	Paper insertion method for IP 5X compartments & 1 mm wire insertion method for IP 4X compartments. Type, Dimensions & profile of the gaskets should be same as type tested panel gaskets

		LEGEND: * RECORDS, INDENTIFIED WITH "TICK" (√) SHALL BE ESSENTIALLY INCLUDED BY SUPPLIER IN QA DOCUMENTATION. ** **M:** MANUFACTURER/SUB-SUPPLIER C**:** MAIN SUPPLIER, **N**: NTPC **P:** PERFORM **W**: WITNESS AND **V:** VERIFICATION. AS APPROPRIATE, **CHP:** NTPC SHALL IDENTIFY IN COLUM "N" AS ' W"		DOC. NO.:	REV…… CAT…..	
MANUFACTURER/ SUB-SUPPLIER	MAIN-SUPPLIER		FOR NTPC USE			
SIGNATURE				REVIEWED BY	APPROVED BY	APPROVAL SEAL

MFGR.'s LOGO	MANUFACTURER'S NAME AND ADDRESS	INDICATIVE MANUFACTURING QUALITY PLAN		PROJECT :
		ITEM : LT SWITCHGEAR SUB-SYSTEM: LT	QP NO.: REV.NO.: DATE: PAGE: …. OF….	PACKAGE : CONTRACT NO. : MAIN-SUPPLIER:

SL. NO	COMPONENT & OPERATIONS	CHARACTERISTICS	CLASS	TYPE OF CHECK	QUANTUM OF CHECK		REFERENCE DOCUMENT	ACCEPTANCE NORMS	FORMAT OF RECORD	AGENCY				REMARKS
		25. IR Test before & after the HV Test	Major	Electrical.	100%	100%	IS-8623	IS-8623	TC		P	W	W	
		26. HV test on Power & control circuit.	Critical	Electrical	100%	100%	IS-8623	IS-8623	TC		P	W	W	
		27. Fitting of sheet steel covers at both ends of transport units	Major	Visual	100%	100%	NTPC Spec.	NTPC Spec.	TC		P	V	V	Surveillance check by Main contractor / NTPC
2	Packing	-Completeness -Sturdiness -Loose Items	Major	Visual	100%	-	Mfr. Std. Practice	Mfr. Std. Practice	QC Records		P	-	-	

		LEGEND: * RECORDS, INDENTIFIED WITH "TICK" (√) SHALL BE ESSENTIALLY INCLUDED BY SUPPLIER IN QA DOCUMENTATION. ** **M:** MANUFACTURER/SUB-SUPPLIER C**:** MAIN SUPPLIER, **N**: NTPC **P:** PERFORM **W**: WITNESS AND **V:** VERIFICATION. AS APPROPRIATE, **CHP:** NTPC SHALL IDENTIFY IN COLUM "N" AS ' W"		DOC. NO.:	REV…… CAT…..	
MANUFACTURER/ SUB-SUPPLIER	MAIN-SUPPLIER		FOR NTPC USE			
SIGNATURE				REVIEWED BY	APPROVED BY	APPROVAL SEAL

	ITEM : MV Switrchgear upto 33KV	INDICATIVE QUALITY PLAN	QP.NO:	REVIEWED BY	APPROVED BY
एनटीपीसी NTPC			Rev No.: 0		
		CONFORMING TO CODE : IS / IEC / NTPC TECHNICAL SPECIFICATION	Date:		
			VALID UPTO:		

Sl No	COMPONENT & OPERATIONS		CHARACTERISTICS	CLASS	TYPE OF CHECK	QUANTUM OF CHECK		REFERENCE DOCUMENT	ACCEPTANCE NORMS	FORMAT OF RECORD		AGENCY			REMARKS
						6 M	6 C/N					M	C	N	
1	2		3	4	5			7	8	9	D *	**	10		11
1.00	**Raw Material/Bought out Item Checks-**														
1	CT's	1	Make, type & rating	Major	Visual	100%	10% of each type	As per P.O.Spec., App. Drg. , Appd. Vendor List	As per P.O.Spec., App. Drg. , Appd. Vendor List	QC Record		P	V	-	
		2	All routine tests as per IS- 2705	Critical	Elec	100%	10% of each type	IS- 2705/ App. Drg./ App. Data sheet	IS- 2705/ App. Drg./ App. Data sheet	Supplier TC	√	V	V	-	
		3	PD before & after Pig Tail Connection	Critical	Elec	100%	10% of each typr	CT mfr standard	CT mfr standard	QC record	√	P	V	-	
2	PT's	1	Make, type & rating	Major	Visual	100%	10% of each type	As per P.O.Spec., App. Drg., Appd. Vendor List	As per P.O.Spec., App. Drg., Appd. Vendor List	QC Record		P	V	-	
		2	All routine tests as per IS- 3156	Critical	Elec	100%	10% of each type	IS- 3156/App. Drg./ App. Data sheet	IS- 3156/App. Drg./ App. Data sheet	Supplier TC	√	V	V	-	
3	Numerical Protection Relays	1	Make ,Type & rating	Major	Visual	100%	10% of each type	As per P.O.Spec., Appd. Vendor List	As per P.O.Spec., Appd. Vendor List	QC Records		P	V	-	
		2	FAT	Major	Elec	Special Inspection Levels, S1 (AQL 1.5) as per IS2500 Part-I per Type of relay		As per Approved FAT procedure		FAT Report	√	P	W	W	FAT inspection on Panel / Loose Relays at BHEL / Vendor works.
4	Door Gasket	1	Profile	Minor	Visual	1 Sample per lot	1 Sample per lot	Mnfr std./ spec.	Mnfr std./ spec.	QC record		P	V	-	Panel Type Test Report of Degree of Protection for Reference at the time of inspection
5	Bus bar Support Insulator/ Seal off bushing	1	Cantillever Strength	Major	Test	Supplier std.	Supplier std.	Mnfr / BHEL std./drg / IS-9431	Mnfr / BHEL std./drg / IS-9431	Supplier TC		V	V	-	Not applicable for inter-panel SOB
		2	HV Test	Major	Test	Supplier std.	Supplier std.	Mnfr / BHEL std./drg / IS-9431	Mnfr / BHEL std./drg / IS-9431	Supplier TC		V	V	-	
		3	PD Test	Major	Test	Supplier std.	Supplier std.	Mnfr / BHEL std./drg / IS-9431	Mnfr / BHEL std./drg / IS-9431	Supplier TC		V	V	-	
		4	Comparative Tracking Index	Major	Test	Supplier std.	Supplier std.	Mnfr / BHEL std./drg / IS-9431	>=600V	Supplier TC		V	V	-	
		5	Dimension	Major	Meas.	Supplier std.	Supplier std.	BHEL drg.	BHEL drg.	QC Record		P	V	-	

D: * RECORDS, INDENTIFIED WITH "TICK" (√) SHALL BE ESSENTIALLY INCLUDED BY SUPPLIER IN QA DOCUMENTATION. ** M: MANUFACTURER / SUB-SUPPLIER: C: MAIN SUPPLIER, N: N
FORM W: WITNESS AND V: VERIFICATION. CHP: CUSTOMER HOLD POINT BY NTPC SHALL BE IDENTIFIED UNDER AGENCY COLUMN "N" AS 'W'.

	ITEM : MV Switrchgear upto 33KV	INDICATIVE QUALITY PLAN	QP.NO:	REVIEWED BY	APPROVED BY
			Rev No.: 0		
		CONFORMING TO CODE : IS / IEC / NTPC TECHNICAL SPECIFICATION	Date:		
			VALID UPTO:		

Sl No	COMPONENT & OPERATIONS		CHARACTERISTICS	CLASS	TYPE OF CHECK	QUANTUM OF CHECK		REFERENCE DOCUMENT	ACCEPTANCE NORMS	FORMAT OF RECORD		AGENCY			REMARKS
						6 M	6 C/N					M	C	N	
1	2		3	4	5			7	8	9	D *	**	10		11
B	**In process checks**														
1	Vacuum Circuit Breaker	1	Type & Rating	Major	Visual	100%	Special Inspection Levels, S2 (AQL 1.5) as per IS2500 Part-I per board	Appd. Drawing	Appd. Drawing	Test Record		P	V	-	
		2	HV Test on Power Circuit	Major	Test	100%		IEC 62271-100	IEC 62271-100	Test Record		P	V	-	
		3	IR Test on Main, Auxiliary/ Control Circuit	Major	Test	100%		IEC 62271-100	IEC 62271-100	Test Record		P	V	-	
		4	Contact Resistance	Major	Test	100%		IEC 62271-100	IEC 62271-100	Test Record		P	V	-	
		5	Mechanical operation	Major	Test	100%		IEC 62271-100	IEC 62271-100	Test Record		P	V	-	
		6	Breaker Closing/ Tripping Time	Major	Test	100%		Mfg std.	Data sheet	Test Record		P	V	-	
2	Vacuum Contactor along with panel	1	Make, Type & Rating	Major	Visual	100%	Special Inspection Levels, S2 (AQL 1.5) as per IS2500 Part-I per board	Appd. Drawing	Appd. Drawing	Test Record		P	V	-	
		2	HV Test on Power Circuit	Major	Test	100%		IEC 62271-100	IEC 62271-100	Test Record		P	V	-	
		3	IR Test on Main, Auxiliary/ Control Ckt.	Major	Test	100%		IEC 62271-100	IEC 62271-100	Test Record		P	V	-	
		4	Contact Resistance	Major	Test	100%		IEC 62271-100	IEC 62271-100	Test Record		P	V	-	
		5	Mechanical operation	Major	Test	100%		IEC 62271-100	IEC 62271-100	Test Record		P	V	-	
		6	Closing/ Tripping Time	Major	Test	100%		Supplier TC	Supplier TC	Supplier TC		V	V	-	
C.	**Final Panel Assembly**														
	Panel	1	Verification of overall dimensions and labels	Major	Meas.	100%	Special Inspection Levels, S2 (AQL 1.5) as per IS2500 Part-I per board	As per approved Layout drgs.	As per approved Layout drgs.	Mfr. Record		P	W	W	
		2	Measurement of tightness of busbar joints by torque wrench	Critical	Meas.	100%	5 joints / offered lot	-	40 Nm	Mfr. Record		P	W	W	

D: * RECORDS, INDENTIFIED WITH "TICK" (√) SHALL BE ESSENTIALLY INCLUDED BY SUPPLIER IN QA DOCUMENTATION. ** M: MANUFACTURER / SUB-SUPPLIER: C: MAIN SUPPLIER, N: N
FORM W: WITNESS AND V: VERIFICATION. CHP: CUSTOMER HOLD POINT BY NTPC SHALL BE IDENTIFIED UNDER AGENCY COLUMN "N" AS 'W'.

	ITEM : **MV Switrchgear upto 33KV**	**INDICATIVE QUALITY PLAN**	QP.NO:	REVIEWED BY	APPROVED BY
			Rev No.: 0		
		CONFORMING TO CODE : IS / IEC / NTPC TECHNICAL SPECIFICATION	Date:		
			VALID UPTO:		

SI No	COMPONENT & OPERATIONS		CHARACTERISTICS	CLASS	TYPE OF CHECK	QUANTUM OF CHECK		REFERENCE DOCUMENT	ACCEPTANCE NORMS	FORMAT OF RECORD		AGENCY			REMARKS
						6 M	6 C/N					M	C	N	
1	2		3	4	5			7	8	9	D *	**	10		11
		3	CT /PT fixing & mounting arrangement	Major	Visual	100%	10 Samples / offered lot	Mfg. drg.	Independently mounted	Mfr. Record		P	W	W	Check CT pig tail fixing with busbar/ connection (i.e. checking of fixing of equipotential wire applicable only for Slot CT).
		4	Busbar Clearance Check	Major	Measurement	100%	Aat random, at 2-3 points	Mfg. drg.	Approved Drawing	Mfr. Record		P	W	W	
		5	Functional / Operational check on Breaker/ Contactor, Operation of limit switches / Electrical Interlock Checks.	Critical	Test	100%	Special Inspection Levels, S2 (AQL 1.5) as per IS2500 Part-I per board	NTPC approved scheme & drg.	NTPC approved scheme & drg.	Mfr. Record		P	W	W	
		6	Main circuit contact Resistance Measurement (Top Busbar to Bottom Fixed Contact).	Critical	Test	100%		IEC 62271-100/ Temp. rise test report	IEC 62271-100/ Temp. rise test report	Mfr. Record		P	W	W	
		7	Safety Shutters operation check	Critical	Mech.	100%		BHEL, Drg.	BHEL, Drg.	Mfr. Record		P	W	W	
		8	5 Close/ open operation test for CB/ Contactor	Critical	Test	100%		IEC 62271-100	IEC 62271-100	Mfr. Record		P	W	W	
		9	Breaker/ Contactor Closing/ Tripping Time	Critical	Test	100%		Datasheet, mfr standard	Datasheet, mfr standard	Mfr. Record		P	W	W	
		10	Earthing of Breaker Truck / Doors	Major	Visual	100%		-	-	-		P	W	W	
		11	Circuit Breaker / Contactor alignment check while insertion to panel	Major	Visual	100%		-	-	-		P	W	W	
		12	Interchangeability check for similar rating breaker trucks	Major	Mech	100%	1 of each rating	Approved drgs	Approved drgs	-		P	W	W	
		13	Overall aesthetics, finish, Paint shade, thickness, Adhesion (On outer surface).	Major	Visual/Test	100%	1 Panel / offered lot	As per NTPC spec.	As per NTPC spec.	Mfr. Record		P	W	W	Paint adhesion check by cross hatch method using calibrated tape

D: * RECORDS, INDENTIFIED WITH "TICK" (√) SHALL BE ESSENTIALLY INCLUDED BY SUPPLIER IN QA DOCUMENTATION. ** M: MANUFACTURER / SUB-SUPPLIER: C: MAIN SUPPLIER, N: N
FORM W: WITNESS AND V: VERIFICATION. CHP: CUSTOMER HOLD POINT BY NTPC SHALL BE IDENTIFIED UNDER AGENCY COLUMN "N" AS 'W'.

	ITEM : **MV Switrchgear upto 33KV**	**INDICATIVE QUALITY PLAN**	QP.NO:	REVIEWED BY	APPROVED BY
			Rev No.: 0		
		CONFORMING TO CODE : IS / IEC / NTPC TECHNICAL SPECIFICATION	Date:		
			VALID UPTO:		

Sl No	COMPONENT & OPERATIONS		CHARACTERISTICS	CLASS	TYPE OF CHECK	QUANTUM OF CHECK		REFERENCE DOCUMENT	ACCEPTANCE NORMS	FORMAT OF RECORD		AGENCY			REMARKS
						6 M	6 C/N					M	C	N	
1	2		3	4	5			7	8	9	D *	**	10		11
		14	HV test on Power & control ckt.	Critical	Test	100%	Special Inspection Levels, S2 (AQL 1.5) as per IS2500 Part-I	IEC 62271-200	IEC 62271-200	Mfr. Record		P	W	W	
		15	IR Test before & after the HV Test with 500V meggar for control circuit and 5.0KV Meggar for Power Ckt.	Major	Test	100%		IEC 62271-200	IEC 62271-200	Mfr. Record		P	W	W	
		16	Door locking arrangement	Major	Visual	100%		Internal Arc test report	Internal Arc test report	-		P	W	W	
		17	Degree of protection check	Major	Test	100%		NTPC approved drgs / NTPC Spec	Paper should not come out when door is closed.	Mfr. Record		P	W	W	Paper pulling method for IP 5X Instrument Panel.
		18	Proper Wire Dressing / Crimping	Major	Visual	100%		-	-	-		P	W	W	
		19	Gland plate material and thickness check	Minor	Meas.	100%		App. Drg.	App. Drg.	Mfr. Record		P	W	W	
	Earthing Truck	1	Rating & Type	Major	Visual	100%	100%	As per NTPC s W	As per NTPC spec.	Mfr. Record		P	W	W	
		2	5 Close/ open operation test for CB/ Contactor	Major	Functional test	100%		-do-	-do-	Mfr. Record		P	W	W	
		3	Electrical interlock check	Major	Functional test	100%		-do-	-do-	Mfr. Record		P	W	W	

D: * RECORDS, INDENTIFIED WITH "TICK" (√) SHALL BE ESSENTIALLY INCLUDED BY SUPPLIER IN QA DOCUMENTATION. ** M: MANUFACTURER / SUB-SUPPLIER: C: MAIN SUPPLIER, N: N
FORM W: WITNESS AND V: VERIFICATION. CHP: CUSTOMER HOLD POINT BY NTPC SHALL BE IDENTIFIED UNDER AGENCY COLUMN "N" AS 'W'.

Format No.: QS-01-QAI-P-10/F3-R0 Engg. Div./QA&I

MFGR.'s LOGO	MANUFACTURER'S NAME AND ADDRESS	INDICATIVE MANUFACTURING QUALITY PLAN		PROJECT :
		ITEM : POTENTIAL TRANSFORMER	QP NO.:	PACKAGE :
			REV.NO.:	CONTRACT NO. :
			DATE:	MAIN-SUPPLIER:
		SUB-SYSTEM: 33 KV OIL FILLED	PAGE: …. OF….	

SL. NO	COMPONENT & OPERATIONS	CHARACTERISTICS	CLASS	TYPE OF CHECK	QUANTUM OF CHECK		REFERENCE DOCUMENT	ACCEPTANCE NORMS	FORMAT OF RECORD	AGENCY				REMARKS
					M	C / N				M		C	N	
1.	2.	3.	4.	5.	6.		7.	8.	9.	D*	** 10.			11.
	BOUGHT OUT ITEMS													
1.1	Insulator	Dimension (ID,OD,P.C.D)	Major	Measure	1 sample/ Size/ lot	-	Drawing/ P.O.	Drawing/ P.O.	F01 A (8.2.4) / STC		P	-	-	
	_	Flange Thickness	DO	DO	DO	-	DO	DO	DO		P	-	-	
	_	Creepage	DO	DO	DO	-	DO	DO	DO		P	-	-	
	_	Total Height	DO	DO	DO	-	DO	DO	DO		P	-	-	
	_	Hole Dia.	DO	DO	DO	-	DO	DO	DO		P	-	-	
	_	Electrical Routine Test	DO	Test	DO	-	IS 5621 - 1980	IS 5621 - 1980	STC		V	-	-	
	_	Temp. Cycle Test	DO	DO	DO	-	DO	DO	DO		V	-	-	
	_	Porosity Test	DO	DO	DO	-	DO	DO	DO		V	-	-	
	_	Visual	DO	Physical	100%	-	Free From Damage	Free From Damage	F01 A (8.2.4) / STC		P / V	-	-	
1.2	Supper Enamelled Copper wire	Dimension	Major	Measure	1 sample/ Size/ lot	-	IS 13730	IS 13730	F01Y (8.2.4) / STC		P / V	-	-	
		Elongation	DO	Test	DO	-	DO	DO	DO		P / V	-	-	
		Springness	DO	DO	DO	-	DO	DO	DO		P / V	-	-	
		Flexiblity & adherence	DO	DO	DO	-	DO	DO	DO		P / V	-	-	

		LEGEND: * RECORDS, INDENTIFIED WITH "TICK" (√) SHALL BE ESSENTIALLY INCLUDED BY SUPPLIER IN QA DOCUMENTATION. ** **M:** MANUFACTURER/SUB-SUPPLIER **C:** MAIN SUPPLIER, **N**: NTPC **P:** PERFORM **W**: WITNESS AND **V:** VERIFICATION. AS APPROPRIATE, **CHP:** NTPC SHALL IDENTIFY IN COLUM "N" AS ' W"		DOC. NO.: REV…… CAT…..
MANUFACTURER/ SUB-SUPPLIER	MAIN-SUPPLIER		FOR NTPC USE	
SIGNATURE				REVIEWED BY / APPROVED BY / APPROVAL SEAL

MFGR.'s LOGO	MANUFACTURER'S NAME AND ADDRESS	INDICATIVE MANUFACTURING QUALITY PLAN		PROJECT :
		ITEM : POTENTIAL TRANSFORMER	QP NO.: REV.NO.: DATE:	PACKAGE : CONTRACT NO. :
		SUB-SYSTEM: 33 KV OIL FILLED	PAGE: …. OF….	MAIN-SUPPLIER:

SL. NO	COMPONENT & OPERATIONS	CHARACTERISTICS	CLASS	TYPE OF CHECK	QUANTUM OF CHECK		REFERENCE DOCUMENT	ACCEPTANCE NORMS	FORMAT OF RECORD	AGENCY				REMARKS
					M	C / N				M		C	N	
1.	2.	3.	4.	5.	6.		7.	8.	9.	D*	** 10.			11.
		Solvent Test	DO	DO	DO	-	DO	DO	STC		V	-	-	
		Breakdown Voltage	DO	DO	DO	-	DO	DO	F01Y (8.2.4) / STC		P / V	-	-	
		Continuty of Covering	DO	DO	DO	-	DO	DO	STC		V	-	-	
		Resistance to abrasion	DO	DO	DO	-	DO	DO	F01Y (8.2.4) / STC		P / V	-	-	
		Resistance Measurement	DO	DO	DO	-	DO	DO	DO		P / V	-	-	
	_	Heat Shock Test	DO	DO	DO	-	DO	DO	DO		V	-	-	
	_	Cut Through Test	DO	DO	DO	-	DO	DO	DO		P / V	-	-	
1.3	MS Tank	Dimension	Major	Measure	1 sample /Size / lot	-	Drawing/ P.O.	Drawing/ P.O.	F01(8.2.4)		P	-	-	
		Material	DO	Test	DO	-	DO	DO	STC		V	-	-	
		Surface Finish	DO	Physical	DO	-	Free From Damage	Free From Damage	Inhouse TC		P	-	-	
		Pressure test	DO	Test	100%	-	test@30 psi	No Leakage	DO		P/V	-	-	
1.4	Core (C.R.G.O)	Dimension	Major	Measure	1 sample /lot	-	P.O./Drg.	P.O./Drg.	F01(8.2.4)		P	-	-	
		Surface defects	DO	Visual	DO	-	Free From Damage	Free From Damage	DO		P	-	-	
		Weight	DO	Measure	DO	-	P.O./Drg.	P.O./Drg.	DO		P	-	-	

		LEGEND: * RECORDS, INDENTIFIED WITH "TICK" (√) SHALL BE ESSENTIALLY INCLUDED BY SUPPLIER IN QA DOCUMENTATION. ** **M:** MANUFACTURER/SUB-SUPPLIER **C:** MAIN SUPPLIER, **N**: NTPC **P:** PERFORM **W**: WITNESS AND **V:** VERIFICATION. AS APPROPRIATE, **CHP:** NTPC SHALL IDENTIFY IN COLUM "N" AS ' W"		DOC. NO.: REV…… CAT…..
MANUFACTURER/ SUB-SUPPLIER	MAIN-SUPPLIER		FOR NTPC USE	REVIEWED BY / APPROVED BY / APPROVAL SEAL
SIGNATURE				

MFGR.'s LOGO	MANUFACTURER'S NAME AND ADDRESS	INDICATIVE MANUFACTURING QUALITY PLAN		PROJECT :
		ITEM : POTENTIAL TRANSFORMER	QP NO.: REV.NO.: DATE:	PACKAGE : CONTRACT NO. :
		SUB-SYSTEM: 33 KV OIL FILLED	PAGE: …. OF….	MAIN-SUPPLIER:

SL. NO	COMPONENT & OPERATIONS	CHARACTERISTICS	CLASS	TYPE OF CHECK	QUANTUM OF CHECK		REFERENCE DOCUMENT	ACCEPTANCE NORMS	FORMAT OF RECORD	AGENCY			REMARKS
					M	C / N				M	C	N	
1.	2.	3.	4.	5.	6.		7.	8.	9.	D*	** 10.		11.
1.5	Bellow (SS)	**Dimension**	Major	Measure	1 sample/ Size/ lot	-	As per P.O./Drg.	As per P.O./Drg.	F01W(8.2.4)/STC		P / V	-	-	
		Flange Thickness	DO	DO	DO	-	DO	DO	DO		P / V	-	-	
		Flange (O.D.,P.C.D.,Holes)	DO	DO	DO	-	DO	DO	DO		P / V	-	-	
		Chemical composition	DO	Test	DO	-	DO	DO	STC		V	-	-	
		Leakage Test	DO	DO	DO	-	check @30psi	No leakage	F01W(8.2.4)/STC		P / V	-	-	
1.6	Viton Rubber O Ring	Dimension (ID,OD,Thk)	Major	Measure	1 sample/ Size/ lot		P.O./Drg./Mfg.std.	P.O./Drg./Mfg. std.	F01F(8.2.4)/STC		P / V	-	-	
		Hardness	DO	Test	DO		DO	DO	DO		P / V	-	-	
		Tensile Strength	DO	DO	DO		DO	DO	STC		V	-	-	
		Ultimate Elongation	DO	DO	DO		DO	DO	DO		V	-	-	
		Compression set at	DO	DO	DO		DO	DO	DO		V	-	-	
		200^0C for 22 Hrs												
		Heat Resistance @ 250^0C,	DO	DO	DO		DO	DO	DO		V	-	-	
		70 Hrs.												
		Ageing in Transformer Oil	DO	DO	DO		DO	DO	DO		V	-	-	
		at 200^0C for 72 Hrs												

		LEGEND: * RECORDS, INDENTIFIED WITH "TICK" (√) SHALL BE ESSENTIALLY INCLUDED BY SUPPLIER IN QA DOCUMENTATION. ** **M:** MANUFACTURER/SUB-SUPPLIER **C:** MAIN SUPPLIER, **N**: NTPC **P:** PERFORM **W**: WITNESS AND **V:** VERIFICATION. AS APPROPRIATE, **CHP:** NTPC SHALL IDENTIFY IN COLUM "N" AS ' W"		DOC. NO.:	REV…… CAT…..	
MANUFACTURER/ SUB-SUPPLIER	MAIN-SUPPLIER		FOR NTPC USE			
SIGNATURE				REVIEWED BY	APPROVED BY	APPROVAL SEAL

MFGR.'s LOGO	MANUFACTURER'S NAME AND ADDRESS	INDICATIVE MANUFACTURING QUALITY PLAN		PROJECT :
		ITEM : POTENTIAL TRANSFORMER	QP NO.: REV.NO.: DATE:	PACKAGE : CONTRACT NO. :
		SUB-SYSTEM: 33 KV OIL FILLED	PAGE: …. OF….	MAIN-SUPPLIER:

SL. NO	COMPONENT & OPERATIONS	CHARACTERISTICS	CLASS	TYPE OF CHECK	QUANTUM OF CHECK		REFERENCE DOCUMENT	ACCEPTANCE NORMS	FORMAT OF RECORD	AGENCY			REMARKS
					M	C / N				M	C	N	
1.	2.	3.	4.	5.	6.		7.	8.	9.	D*	** 10.		11.
		Change in Volume	DO	DO	DO		DO	DO	DO		V	-	-	
		Change in Hardness	DO	DO	DO		DO	DO	DO		V	-	-	
		Change in Tensile Strength	DO	DO	DO		DO	DO	DO		V	-	-	
		Change in Elongation	DO	DO	DO		DO	DO	DO		V	-	-	
		Density	DO	DO	DO		DO	DO	DO		V	-	-	
1.7	Insulating Crepe Paper	Dimension Thickness	Major	Test	1sample/lot	-	PO/Mfg.std./Tech. Data sheet	PO/Mfg.std./Tech. Data sheet	F01R (8.2.4)/STC		P / V	-	-	
		Grammage/Substance	DO	DO	DO	-	IS 9335/IEC 60554	IS 9335/IEC 60554	DO		P / V	-	-	
		Tensile Strength (MD)	DO	DO	DO	-	DO	DO	DO		P / V	-	-	
		Elongation at Break (MD)	DO	DO	DO	-	DO	DO	DO		P / V	-	-	
		Conductivity of aq. Extract	DO	DO	DO	-	DO	DO	DO		P / V	-	-	Max. 5
		Ph of aq. Extract	DO	DO	DO	-	DO	DO	DO		P / V	-	-	ERDA test result once in half yearly
		Ash Content	DO	DO	DO	-	DO	DO	DO		P / V	-	-	
		Moisture Content	DO	DO	DO	-	DO	DO	DO		P / V	-	-	

MANUFACTURER/ SUB-SUPPLIER	MAIN-SUPPLIER	**LEGEND:** * RECORDS, INDENTIFIED WITH "TICK" (√) SHALL BE ESSENTIALLY INCLUDED BY SUPPLIER IN QA DOCUMENTATION. ** **M:** MANUFACTURER/SUB-SUPPLIER **C:** MAIN SUPPLIER, **N**: NTPC **P:** PERFORM **W**: WITNESS AND **V:** VERIFICATION. AS APPROPRIATE, **CHP:** NTPC SHALL IDENTIFY IN COLUM "N" AS ' W"	FOR NTPC USE	DOC. NO.: REV…… CAT…..
SIGNATURE				REVIEWED BY / APPROVED BY / APPROVAL SEAL

		Hill Count	DO	DO	DO	-	PO/Mfg.std.	PO/Mfg. std.	DO		P / V	-	-	
SL. NO	COMPONENT & OPERATIONS	CHARACTERISTICS	CLASS	TYPE OF CHECK	QUANTUM OF CHECK		REFERENCE DOCUMENT	ACCEPTANCE NORMS	FORMAT OF RECORD	AGENCY				REMARKS
					M	C / N				M		C	N	
1.	2.	3.	4.	5.	6.		7.	8.	9.	D*	** 10.			11.
1.8	Insulating Kraft Paper	Dimension (Thickness)	Major	Test	1sample/lot	-	PO/Mfg.std./Tech. Data sheet	PO/Mfg.std./Tech. Data sheet	F 01 L (8.2.4)/STC		P / V	-	-	
		Substance	DO	DO	DO	-	IS 9335/IEC 60554	IS 9335/IEC 60554	DO		P / V	-	-	
		Density	DO	DO	DO	-	DO	DO	DO		V	-	-	
		Tensile Index	DO	DO	DO	-	DO	DO	DO		P / V	-	-	
		Tear Index	DO	DO	DO	-	DO	DO	STC		V	-	-	ERDA test result once in half yearly
		Elongation	DO	DO	DO	-	DO	DO	F 01 L (8.2.4)/STC		P / V	-	-	
		Ash Content	DO	DO	DO	-	DO	DO	DO		P / V	-	-	
		Moisture Content	DO	DO	DO	-	DO	DO	DO		P / V	-	-	
		Ph Value	DO	DO	DO	-	DO	DO	DO		P / V	-	-	
		Conductivity	DO	DO	DO	-	DO	DO	DO		P / V	-	-	Max. 5

		LEGEND: * RECORDS, INDENTIFIED WITH "TICK" (√) SHALL BE ESSENTIALLY INCLUDED BY SUPPLIER IN QA DOCUMENTATION. ** **M:** MANUFACTURER/SUB-SUPPLIER **C:** MAIN SUPPLIER, **N**: NTPC **P:** PERFORM **W**: WITNESS AND **V:** VERIFICATION. AS APPROPRIATE, **CHP:** NTPC SHALL IDENTIFY IN COLUM "N" AS ' W"		DOC. NO.: REV…… CAT…..
MANUFACTURER/ SUB-SUPPLIER	MAIN-SUPPLIER		FOR NTPC USE	REVIEWED BY / APPROVED BY / APPROVAL SEAL
SIGNATURE				

MFGR.'s LOGO	MANUFACTURER'S NAME AND ADDRESS	INDICATIVE MANUFACTURING QUALITY PLAN		PROJECT :
		ITEM : POTENTIAL TRANSFORMER	QP NO.: REV.NO.: DATE:	PACKAGE : CONTRACT NO. :
		SUB-SYSTEM: 33 KV OIL FILLED	PAGE: …. OF….	MAIN-SUPPLIER:

SL. NO	COMPONENT & OPERATIONS	CHARACTERISTICS	CLASS	TYPE OF CHECK	QUANTUM OF CHECK		REFERENCE DOCUMENT	ACCEPTANCE NORMS	FORMAT OF RECORD	AGENCY			REMARKS
					M	C / N				M	C	N	
1.	2.	3.	4.	5.	6.		7.	8.	9.	D*	** 10.		11.
		Electrical Strength in Air	DO	DO	DO	-	DO	Min. 7kv/mm	DO		P / V	-	-	
1.9	Copper Lugs	Dimension	Major	Measure	1 sample/ Size/ lot	-	P.O. / Drawing	P.O. / Drawing	F01C(8.2 .4)/STC		P / V	-	-	
		I.D. & Hole Dia. of barrel	DO	DO	DO	-	DO	DO	DO		P / V	-	-	Cu. Purity Test from 3rd Party NABL Approved Lab
		Conductivity	DO	Test	DO	-	As per IACS	97.0 % Min.	DO		P / V	-	-	
		Cu purity test	DO	DO	DO	-	As per IS 191	99.90 % Min.	Lab Report		V	-	-	
1.10	Semi Conducting Black crepe paper	Thickness	Major	Measure	1sample/lot	-	Mfg.std./Tech. Data sheet	Mfg.std./Tech. Data sheet	F01 F (8.2.4)/ STC		P / V	-	-	
		Width	DO	DO	DO	-	DO	DO	DO		P / V	-	-	
		Substance	DO	DO	DO	-	DO	DO	DO		P / V	-	-	
		Tensile Strength	DO	Test	DO	-	DO	DO	DO		P / V	-	-	
		Elongation at Break	DO	DO	DO	-	DO	DO	DO		P / V	-	-	

		LEGEND: * RECORDS, INDENTIFIED WITH "TICK" (√) SHALL BE ESSENTIALLY INCLUDED BY SUPPLIER IN QA DOCUMENTATION. ** **M:** MANUFACTURER/SUB-SUPPLIER **C:** MAIN SUPPLIER, **N**: NTPC **P:** PERFORM **W**: WITNESS AND **V:** VERIFICATION. AS APPROPRIATE, **CHP:** NTPC SHALL IDENTIFY IN COLUM "N" AS ' W"		DOC. NO.:	REV…… CAT…..	
MANUFACTURER/ SUB-SUPPLIER	MAIN-SUPPLIER		FOR NTPC USE			
SIGNATURE				REVIEWED BY	APPROVED BY	APPROVAL SEAL

MFGR.'s LOGO	MANUFACTURER'S NAME AND ADDRESS	INDICATIVE MANUFACTURING QUALITY PLAN		PROJECT :
		ITEM : POTENTIAL TRANSFORMER	QP NO.: REV.NO.: DATE:	PACKAGE : CONTRACT NO. :
		SUB-SYSTEM: 33 KV OIL FILLED	PAGE: …. OF….	MAIN-SUPPLIER:

SL. NO	COMPONENT & OPERATIONS	CHARACTERISTICS	CLASS	TYPE OF CHECK	QUANTUM OF CHECK		REFERENCE DOCUMENT	ACCEPTANCE NORMS	FORMAT OF RECORD	AGENCY			REMARKS
					M	C / N				M	C	N	
1.	2.	3.	4.	5.	6.		7.	8.	9.	D*	** 10.		11.
1.11	Aluminium Crepe Paper	Thickness	Major	Measure	1 sample/lot	-	Mfg.std./Tech. Data sheet	Mfg.std./Tech. Data sheet	F01R(8.2.4) / STC		P / V	-	-
											P / V	-	-
		Width	DO	DO	DO	-	DO	DO	DO		P / V	-	-
		Substance	DO	DO	DO	-	DO	DO	DO		P / V	-	-
		Tensile Strength	DO	Test	DO	-	DO	DO	DO		P / V	-	-
		Elongation at Break	DO	DO	DO	-	DO	DO	DO		P / V	-	-

SL. NO	COMPONENT & OPERATIONS	CHARACTERISTICS	CLASS	TYPE OF CHECK	QUANTUM OF CHECK		REFERENCE DOCUMENT	ACCEPTANCE NORMS	FORMAT OF RECORD	AGENCY			REMARKS
					M	C / N				M	C	N	
1.	2.	3.	4.	5.	6.		7.	8.	9.	D*	** 10.		11.
1.12	Transformer Oil	Appearance	Major	Visual	1 sample/lot	-	IEC 60296	Oil Shall be Clear & Transparent	F01(8.2.4) /STC		P / V	-	-
		Density @ 20^0C	DO	Test	DO	-	DO	Max. 0.895	STC		V	-	-
		Kinematic viscosity@ 40^0C	DO	DO	DO	-	DO	Max. 12	DO		V	-	-
		Pour Point Deg.C	DO	DO	DO	-	DO	Max.(- 40)	DO		V	-	-

MANUFACTURER/ SUB-SUPPLIER	MAIN-SUPPLIER	**LEGEND:** * RECORDS, INDENTIFIED WITH "TICK" (√) SHALL BE ESSENTIALLY INCLUDED BY SUPPLIER IN QA DOCUMENTATION. ** **M:** MANUFACTURER/SUB-SUPPLIER **C:** MAIN SUPPLIER, **N**: NTPC **P:** PERFORM **W**: WITNESS AND **V:** VERIFICATION. AS APPROPRIATE, **CHP:** NTPC SHALL IDENTIFY IN COLUM "N" AS ' W"	FOR NTPC USE	DOC. NO.: REV…… CAT…..
SIGNATURE				REVIEWED BY / APPROVED BY / APPROVAL SEAL

MFGR.'s LOGO	MANUFACTURER'S NAME AND ADDRESS	INDICATIVE MANUFACTURING QUALITY PLAN		PROJECT :
		ITEM : POTENTIAL TRANSFORMER	QP NO.: REV.NO.: DATE:	PACKAGE : CONTRACT NO. :
		SUB-SYSTEM: 33 KV OIL FILLED	PAGE: …. OF….	MAIN-SUPPLIER:

SL. NO	COMPONENT & OPERATIONS	CHARACTERISTICS	CLASS	TYPE OF CHECK	QUANTUM OF CHECK		REFERENCE DOCUMENT	ACCEPTANCE NORMS	FORMAT OF RECORD	AGENCY				REMARKS
					M	C / N				M		C	N	
1.	2.	3.	4.	5.	6.		7.	8.	9.	D*	** 10.			11.
		Water content	DO	DO	DO	-	DO	Max.20 mg/Kg	DO		V	-	-	
		BDV (New unfiltered)	DO	DO	DO	-	DO	Min. 30	F01(8.2.4) /STC		P / V	-	-	
		DDF @90^{0}C	DO	DO	DO	-	DO	Max. 0.001	DO		P / V	-	-	
		Particle Count	DO	DO	DO	-	DO	No gen. Req.	STC		V	-	-	
		Neutralization Value/Acidity	DO	DO	DO	-	DO	Max. 0.01	DO		V	-	-	
		Interfacial Tension	DO	DO	DO	-	DO	Min. 40 mN/mtr	DO		V	-	-	
		Total Sulpher Content	DO	DO	DO	-	DO	Max. 0.15%	DO		V	-	-	
		Corrosive Sulpher	DO	DO	DO	-	DO	Non Corrosive	DO		V	-	-	
		Dibenzyl Disulphide	DO	DO	DO	-	DO	Not Det.(< 5mg/kg)	DO		V	-	-	
		Antioxidant Additives,	DO	DO	DO	-	DO	0.08 - 0.40 %	DO		V	-	-	
		Metal Passivator	DO	DO	DO	-	DO	Not Det.(< 5mg/kg)	DO		V	-	-	
		Furfural Content	DO	DO	DO	-	DO	Not Det.(<0.05mg /kg)	DO		V	-	-	
		Oil Charactersitics after Oxidation Stability test @ 120^{0}C for 500 hrs)												

		LEGEND: * RECORDS, INDENTIFIED WITH "TICK" (√) SHALL BE ESSENTIALLY INCLUDED BY SUPPLIER IN QA DOCUMENTATION. ** **M:** MANUFACTURER/SUB-SUPPLIER **C:** MAIN SUPPLIER, **N**: NTPC **P:** PERFORM **W**: WITNESS AND **V:** VERIFICATION. AS APPROPRIATE, **CHP:** NTPC SHALL IDENTIFY IN COLUM "N" AS ' W"		DOC. NO.: REV…… CAT…..
MANUFACTURER/ SUB-SUPPLIER	MAIN-SUPPLIER		FOR NTPC USE	REVIEWED BY / APPROVED BY / APPROVAL SEAL
SIGNATURE				

MFGR.'s LOGO	MANUFACTURER'S NAME AND ADDRESS	INDICATIVE MANUFACTURING QUALITY PLAN		PROJECT :
		ITEM : POTENTIAL TRANSFORMER	QP NO.: REV.NO.: DATE:	PACKAGE : CONTRACT NO. :
		SUB-SYSTEM: 33 KV OIL FILLED	PAGE: …. OF….	MAIN-SUPPLIER:

SL. NO	COMPONENT & OPERATIONS	CHARACTERISTICS	CLASS	TYPE OF CHECK	QUANTUM OF CHECK		REFERENCE DOCUMENT	ACCEPTANCE NORMS	FORMAT OF RECORD	AGENCY				REMARKS
					M	C / N				M		C	N	
1.	2.	3.	4.	5.	6.		7.	8.	9.	D*	** 10.			11.
		Total acidity	DO	DO	DO	-	IEC 60296	Max. 0.3 mgKOH/gm	STC		V	-	-	
		Total sludge	DO	DO	DO	-	DO	Max. 0.05%	DO		V	-	-	
		DDF @90 Deg.C	DO	DO	DO	-	DO	Max. 0.05	DO		V	-	-	
		Gassing tendency @50Hz	Major	Test	1 sample/lot	-	IEC 60296	0 - 5	STC		V	-	-	
		Flash Point PMCC,Deg.C	DO	DO	DO	-	DO	Min. 135^{0}C	DO		V	-	-	
		PCB Content	DO	DO	DO	-	DO	Not Det.(< 2mg/kg)	DO		V	-	-	
		PCA Content	DO	DO	DO	-	DO	Max. 3%	DO		V	-	-	
		Carbon Type analysis												
		Cn%	DO	DO	DO	-	DO	Min. 45	DO		V	-	-	
		Cp %	DO	DO	DO	-	DO	Max. 49	DO		V	-	-	
		Ca %	DO	DO	DO	-	DO	Max. 6	DO					
2.0	IN - PROCESS INSPECTION													
2.1	Testing before	Turn Ratio	Major	Test	100%	-	IS 3156	IS 3156	P.C.C		P	-	-	
	assembly	High Voltage power frequency test @ 3kv	DO	DO	DO	-	DO	DO	DO		P	-	-	

		LEGEND: * RECORDS, INDENTIFIED WITH "TICK" (√) SHALL BE ESSENTIALLY INCLUDED BY SUPPLIER IN QA DOCUMENTATION. ** **M:** MANUFACTURER/SUB-SUPPLIER **C:** MAIN SUPPLIER, **N**: NTPC **P:** PERFORM **W**: WITNESS AND **V:** VERIFICATION. AS APPROPRIATE, **CHP:** NTPC SHALL IDENTIFY IN COLUM "N" AS ' W"		DOC. NO.: REV…… CAT…..
MANUFACTURER/ SUB-SUPPLIER	MAIN-SUPPLIER		FOR NTPC USE	
SIGNATURE				REVIEWED BY / APPROVED BY / APPROVAL SEAL

MFGR.'s LOGO	MANUFACTURER'S NAME AND ADDRESS	INDICATIVE MANUFACTURING QUALITY PLAN		PROJECT :
		ITEM : POTENTIAL TRANSFORMER	QP NO.: REV.NO.: DATE:	PACKAGE : CONTRACT NO. :
		SUB-SYSTEM: 33 KV OIL FILLED	PAGE: …. OF….	MAIN-SUPPLIER:

SL. NO	COMPONENT & OPERATIONS	CHARACTERISTICS	CLASS	TYPE OF CHECK	QUANTUM OF CHECK		REFERENCE DOCUMENT	ACCEPTANCE NORMS	FORMAT OF RECORD	AGENCY				REMARKS
					M	C / N				M		C	N	
1.	2.	3.	4.	5.	6.		7.	8.	9.	D*	** 10.			11.
		Accuracy test determination of errors according to the requirements of appropriate accuracy class (20% rate volatge) & polarity test	DO	DO	DO	-	DO	DO	DO		P	-	-	
		Final accuracy	DO	DO	DO	-	DO	DO	DO		P	-	-	
2.2	Assembly	Visual Inspection & Fitment of Secondary Terminals	Major	Test	100%	-	IS 3156	IS 3156	P.C.C		P	-	-	
		H.V. @ 3KV (primary neutral to earth)	DO	DO	DO	-	DO	DO	DO		P	-	-	
		I.R. Measurement	DO	DO	DO	-	DO	DO	DO		P	-	-	
		Polarity test	DO	DO	DO	-	DO	DO	DO		P	-	-	
		Fitment of Insulators	DO	Physical	DO	-	Drg./Mfg.std.	Drg./Mfg.std.	DO		P	-	-	
		Tank cleanliness & Painting	DO	DO	DO	-	Free From Damage	Free From Damage	DO		P	-	-	

		LEGEND: * RECORDS, INDENTIFIED WITH "TICK" (√) SHALL BE ESSENTIALLY INCLUDED BY SUPPLIER IN QA DOCUMENTATION. ** **M:** MANUFACTURER/SUB-SUPPLIER **C:** MAIN SUPPLIER, **N**: NTPC **P:** PERFORM **W**: WITNESS AND **V:** VERIFICATION. AS APPROPRIATE, **CHP:** NTPC SHALL IDENTIFY IN COLUM "N" AS ' W"		DOC. NO.:	REV…… CAT…..	
MANUFACTURER/ SUB-SUPPLIER	MAIN-SUPPLIER		FOR NTPC USE			
SIGNATURE				REVIEWED BY	APPROVED BY	APPROVAL SEAL

MFGR.'s LOGO	MANUFACTURER'S NAME AND ADDRESS	INDICATIVE MANUFACTURING QUALITY PLAN		PROJECT :
		ITEM : POTENTIAL TRANSFORMER	QP NO.: REV.NO.: DATE:	PACKAGE : CONTRACT NO. :
		SUB-SYSTEM: 33 KV OIL FILLED	PAGE: …. OF….	MAIN-SUPPLIER:

SL. NO	COMPONENT & OPERATIONS	CHARACTERISTICS	CLASS	TYPE OF CHECK	QUANTUM OF CHECK		REFERENCE DOCUMENT	ACCEPTANCE NORMS	FORMAT OF RECORD	AGENCY				REMARKS
					M	C / N				M		C	N	
1.	2.	3.	4.	5.	6.		7.	8.	9.	D*	** 10.			11.
		Secondary H.V. Test(Secondary terminal to earth)	DO	Test	DO	-	IS 3156	IS 3156	DO		P	-	-	
2.3	Vacuum Drying & Oil Impregnation	Leakage check after assembly	Major	Test	100%	-	test@30psi	No leakage	P.C.C.		P	-	-	
		Oil Test Before filling	DO	DO	1sample/lot	-	IEC 60296	IEC 60296	DO		P	-	-	
		Tan Delta @ 90^0C & B.D.V				-								
		DGA	DO	DO	Randomly	-	IEC 60599	IEC 60599	Test report		P	-	-	
		Oil Level check(After filling)	DO	Physical	100%	-	Drg./Mfg.std.	Drg./Mfg.std.	P.C.C.		P	-	-	
	If applicable	Fitment of Bellow	DO	DO	DO	-	Drawing	Drawing	DO		P	-	-	
		Bellow Pressing	DO	DO	DO	-	1.2Kg/cm²	No Leakage	DO		P	-	-	
		Final Height of Bellow	DO	DO	DO	-	As per Drawing	As per Drawing	DO		P	-	-	

		LEGEND: * RECORDS, INDENTIFIED WITH "TICK" (√) SHALL BE ESSENTIALLY INCLUDED BY SUPPLIER IN QA DOCUMENTATION. ** **M:** MANUFACTURER/SUB-SUPPLIER **C:** MAIN SUPPLIER, **N**: NTPC **P:** PERFORM **W**: WITNESS AND **V:** VERIFICATION. AS APPROPRIATE, **CHP:** NTPC SHALL IDENTIFY IN COLUM "N" AS ' W"		DOC. NO.:	REV…… CAT…..	
MANUFACTURER/ SUB-SUPPLIER	MAIN-SUPPLIER		FOR NTPC USE			
SIGNATURE				REVIEWED BY	APPROVED BY	APPROVAL SEAL

MFGR.'s LOGO	MANUFACTURER'S NAME AND ADDRESS	INDICATIVE MANUFACTURING QUALITY PLAN		PROJECT :
		ITEM : POTENTIAL TRANSFORMER	QP NO.: REV.NO.: DATE:	PACKAGE : CONTRACT NO. :
		SUB-SYSTEM: 33 KV OIL FILLED	PAGE: …. OF….	MAIN-SUPPLIER:

SL. NO	COMPONENT & OPERATIONS	CHARACTERISTICS	CLASS	TYPE OF CHECK	QUANTUM OF CHECK		REFERENCE DOCUMENT	ACCEPTANCE NORMS	FORMAT OF RECORD	AGENCY				REMARKS
					M	C / N				M		C	N	
1.	2.	3.	4.	5.	6.		7.	8.	9.	D*	** 10.			11.
3.0	**FINAL INSPECTION**		**RIO TO REVIEW TYPE TEST CLEARANCE.**											
	ROUTINE TEST	Visual & Dimension Check	Critical	Measure	1 Sample	**1 Sample**	App.Drg./GTP	App.Drg./GTP	Test		P	**W**	**W**	
		Oil leakage test.	Critical	Measure	1 Sample	**1 Sample**	App.Drg./GTP	App.Drg./GTP	Test		P	**W**	**W**	
		Verification of Terminal marking & Polarity	DO	Test	100%	**100%**	IS 3156/IEC 61869	IS 3156/IEC 61869	DO		P	**W**	**W**	
		Power Frequency voltage withstand Test on Primary winding	DO	DO	DO	**DO**	DO	DO	DO		P	**W**	**W**	
		Power Frequency voltage withstand Test on Secondary winding	DO	DO	DO	**DO**	DO	DO	DO		P	**W**	**W**	
		Induced over voltage withstand test	DO	DO	DO	**DO**	DO	DO	DO		P	**W**	**W**	
		Determination of errors	DO	DO	DO	**DO**	DO	DO	DO		P	**W**	**W**	
		Capacitance & Tan delta @10 k.v. & Um/√3	DO	DO	DO	**DO**	DO	DO	DO		P	**W**	**W**	
		Oil Test (BDV,Tan Delta, Sp. Res, Moisture)	Critical	Measure	1 Sample	**1 Sample**	App.Drg./GTP	App.Drg./GTP	Test		P	**W**	**W**	

		LEGEND: * RECORDS, INDENTIFIED WITH "TICK" (√) SHALL BE ESSENTIALLY INCLUDED BY SUPPLIER IN QA DOCUMENTATION. ** **M:** MANUFACTURER/SUB-SUPPLIER **C:** MAIN SUPPLIER, **N**: NTPC **P:** PERFORM **W**: WITNESS AND **V:** VERIFICATION. AS APPROPRIATE, **CHP:** NTPC SHALL IDENTIFY IN COLUM "N" AS ' W"		DOC. NO.: REV…… CAT…..
MANUFACTURER/ SUB-SUPPLIER	**MAIN-SUPPLIER**		**FOR NTPC USE**	
SIGNATURE				**REVIEWED BY** / **APPROVED BY** / **APPROVAL SEAL**

MFGR.'s LOGO	MANUFACTURER'S NAME AND ADDRESS	INDICATIVE MANUFACTURING QUALITY PLAN		PROJECT :
		ITEM : SURGE ARRESTOR	QP NO.:	PACKAGE :
		SUB-SYSTEM:	REV.NO.:	CONTRACT NO. :
			DATE:	MAIN-SUPPLIER:
			PAGE: …. OF….	

SL. NO	COMPONENT & OPERATIONS	CHARACTERISTICS	CLASS	TYPE OF CHECK	QUANTUM OF CHECK		REFERENCE DOCUMENT	ACCEPTANCE NORMS	FORMAT OF RECORD	AGENCY			REMARKS
					M	C / N				M	C	N	
1.	2.	3.	4.	5.	6.		7.	8.	9.	D *	** 10.		11.
1	Zinc Oxide Blocks	a) Visual Examination	Major	Physical	100%	100%	IEC 60099-4	IEC 60099-4	TC / Inspection Records	√	P	V	V	
		b) Energy Capability test	Critical	Electrical	100%	100%	IEC 60099-4	IEC 60099-4		√	P	V	V	
		c) Residual Voltage Test	Critical	Electrical	100%	100%	IEC 60099-4	IEC 60099-4		√	P	V	V	
		d) Line discharge class test	Critical	Electrical	3Samples / batch	3Samples / batch	IEC 60099-4	IEC 60099-4		√	P	V	V	
		e) High current test	Critical	Electrical	3Samples / batch	3Samples / batch	IEC 60099-4	IEC 60099-4		√	P	V	V	
		f) Thermal stability test	Critical	Electrical	3Samples / batch	3Samples / batch	IEC 60099-4	IEC 60099-4		√	P	V	V	
		g) Watt loss or resistive current	Critical	Electrical	3Samples / batch	3Samples / batch	IEC 60099-4	IEC 60099-4		√	P	V	V	
2	Porcelain Bushing	a) Major Dimensions	Major	Physical	2Samples/lot	2Samples/lot	Supplier Drg.	Supplier Drg.	TC / Inspection Records	√	P	V	V	Lot mentioned in this RQP refers to batch quantity offered for inspection by supplier.
		b) Visual Examination	Major	Physical	100%	100%	IS: 5621-1980	IS: 5621-1980			P	V	V	
		c) Porosity Test	Major	Physical	2Sample/lot	2Sample/lot	IS: 5621-1980	IS: 5621-1980	T.C.	√	V	V	V	
		d) Electrical Routine Test	Critical	Elect.	100%	100%	IS: 5621-1980	IS: 5621-1980	T.C.	√	V	V	V	
		e) Temp. Cycle Test	Major	Physical	2Samples/lot	2Samples/lot	IS: 5621-1980	IS: 5621-1980	T.C.	√	V	V	V	

		LEGEND: * RECORDS, INDENTIFIED WITH "TICK" (√) SHALL BE ESSENTIALLY INCLUDED BY SUPPLIER IN QA DOCUMENTATION. ** **M:** MANUFACTURER/SUB-SUPPLIER **C:** MAIN SUPPLIER, **N:** NTPC **P:** PERFORM **W:** WITNESS AND **V:** VERIFICATION. AS APPROPRIATE, **CHP:** NTPC SHALL IDENTIFY IN COLUM "N" AS ' W"		DOC. NO.:	REV…… CAT…..	
MANUFACTURER/ SUB-SUPPLIER	MAIN-SUPPLIER		FOR NTPC USE			
SIGNATURE				REVIEWED BY	APPROVED BY	APPROVAL SEAL

INDICATIVE MANUFACTURING QUALITY PLAN

MFGR.'s LOGO	MANUFACTURER'S NAME AND ADDRESS	INDICATIVE MANUFACTURING QUALITY PLAN		PROJECT :
		ITEM : SURGE ARRESTOR	QP NO.:	PACKAGE :
		SUB-SYSTEM:	REV.NO.:	CONTRACT NO. :
			DATE:	MAIN-SUPPLIER:
			PAGE: …. OF….	

SL. NO	COMPONENT & OPERATIONS	CHARACTERISTICS	CLASS	TYPE OF CHECK	QUANTUM OF CHECK		REFERENCE DOCUMENT	ACCEPTANCE NORMS	FORMAT OF RECORD	AGENCY			REMARKS
					M	C / N				M	C	N	
1.	2.	3.	4.	5.	6.		7.	8.	9.	D *	** 10.		11.
3	Aluminium Castings for S.A – Ends	a) Major Dimensions b) Visual Examination c) Tensile test on Test bar d) Chemical Analysis	Major Major Major Major	Physical Physical Mech. Mech.	2Samples/lot 100% 1Sample for every lot of 2000kgs of cast alloy		Supplier drg. ASTM B-85 ASTM B-85/ BS : 1490 ASTM B-85/ BS : 1490	Supplier drg. ASTM B-85 ASTM B-85/ BS : 1490 ASTM B-85/ BS : 1490	TC / Inspection Records T.C. T.C.	√ √	P P V V		
4	Sealing Rings	a) Dimensions b) Hardness (Shore A) c) Compression set d) Ageing Test	Major Major Major Major	Physical Mech. Mech. Mech.	2Samples/lot 2Samples/lot 2Samples/lot 2Samples/lot	2Samples/lot 2Samples/lot 2Samples/lot 2Samples/lot	Supplier drg. DIN 53505 ASTM 2000 (D 395) ASTM 2000 (D 573)	Supplier drg. DIN 53505 ASTM 2000 (D 395) ASTM 2000 (D 573)	TC / Inspection Records T.C. T.C.	√ √ √	P P V V	V V V V	V V V V
5	Pressure Release Diaphragm	a) Visual Check b) Dimensions c) Pressure Test	Major Major Major	Physical Physical Mech.	100% 1Sample/lot 1Sample/lot	100% 1Sample/lot 1Sample/lot	ITP-INW-9B Supplier drg. ITP-INW-9B	ITP-INW-9B Supplier drg. ITP-INW-9B	TC / Inspection Records	√	P P P	V	V

MANUFACTURER/ SUB-SUPPLIER	MAIN-SUPPLIER	LEGEND: * RECORDS, INDENTIFIED WITH "TICK" (√) SHALL BE ESSENTIALLY INCLUDED BY SUPPLIER IN QA DOCUMENTATION. ** M: MANUFACTURER/SUB-SUPPLIER C: MAIN SUPPLIER, N: NTPC P: PERFORM W: WITNESS AND V: VERIFICATION. AS APPROPRIATE, CHP: NTPC SHALL IDENTIFY IN COLUM "N" AS ' W"	FOR NTPC USE	DOC. NO.: REV…… CAT…..		
SIGNATURE				REVIEWED BY	APPROVED BY	APPROVAL SEAL

INDICATIVE MANUFACTURING QUALITY PLAN

MFGR.'s LOGO	MANUFACTURER'S NAME AND ADDRESS	INDICATIVE MANUFACTURING QUALITY PLAN		PROJECT :
		ITEM : SURGE ARRESTOR	QP NO.:	PACKAGE :
		SUB-SYSTEM:	REV.NO.:	CONTRACT NO. :
			DATE:	MAIN-SUPPLIER:
			PAGE: …. OF….	

SL. NO	COMPONENT & OPERATIONS	CHARACTERISTICS	CLASS	TYPE OF CHECK	QUANTUM OF CHECK		REFERENCE DOCUMENT	ACCEPTANCE NORMS	FORMAT OF RECORD	AGENCY			REMARKS
					M	C / N				M	C	N	
1.	2.	3.	4.	5.	6.		7.	8.	9.	D *	** 10.		11.
6	Grading Rings / Corona Rings	a) Visual Examination b) Dimensions c) Tensile Strength test	Major Major Major	Physical Physical Mech.	100% 1Sample/lot 1Sample/lot		ITP- INW-22 / 22A Supplier drg. IS : 733	ITP- INW-22 / 22A Supplier drg. IS : 733	TC / Inspection Records T.C.	√ √ √	P P V			
7	Counters	a) Visual Inspection b) Counter Operation	Major Critical	Physical Elect.	100% 100%		Manufacturer Std0 Manufacturer Std0	Manufacturer Std0 Manufacturer Std0	TC / Inspection Records	√	P P			
8	Millie-Ammeters	a) Insulation resistance b) Comparison test c) H.V Test	Critical Critical Critical	Elect. Elect. Elect.	3 Samples/lot 100% 2 Samples/lot		Manufacturer Std Manufacturer Std Manufacturer Std	Manufacturer Std Manufacturer Std Manufacturer Std	TC / Inspection Records	√ √ √	P P P			

		LEGEND: * RECORDS, INDENTIFIED WITH "TICK" (√) SHALL BE ESSENTIALLY INCLUDED BY SUPPLIER IN QA DOCUMENTATION. ** **M:** MANUFACTURER/SUB-SUPPLIER **C:** MAIN SUPPLIER, **N:** NTPC **P:** PERFORM **W:** WITNESS AND **V:** VERIFICATION. AS APPROPRIATE, **CHP:** NTPC SHALL IDENTIFY IN COLUM "N" AS ' W"		DOC. NO.:	REV…… CAT…..	
MANUFACTURER/ SUB-SUPPLIER	MAIN-SUPPLIER		FOR NTPC USE			
SIGNATURE				REVIEWED BY	APPROVED BY	APPROVAL SEAL

INDICATIVE MANUFACTURING QUALITY PLAN

MFGR.'s LOGO	MANUFACTURER'S NAME AND ADDRESS	INDICATIVE MANUFACTURING QUALITY PLAN		PROJECT :
		ITEM : SURGE ARRESTOR SUB-SYSTEM:	QP NO.: REV.NO.: DATE: PAGE: …. OF….	PACKAGE : CONTRACT NO. : MAIN-SUPPLIER:

SL. NO	COMPONENT & OPERATIONS	CHARACTERISTICS	CLASS	TYPE OF CHECK	QUANTUM OF CHECK		REFERENCE DOCUMENT	ACCEPTANCE NORMS	FORMAT OF RECORD	AGENCY			REMARKS
					M	C / N				M	C	N	
1.	2.	3.	4.	5.	6.		7.	8.	9.	D *	** 10.		11.
IN PROCESS INSPECTION FOR SURGE ARRESTORS													
1	Assembly of Surge Arresters	a) Visual check b) Seal leak Test	Major	Visual Measurement	Physical test		Sample Sample	IEC 60099-4 IEC 60099-4			P P		
FINAL INSPECTION & TESTING													
RIO to review Type Test Clearance													
A	Surge Arresters Routine Test	a) Visual &Dimensions b) Reference Voltage c) Residual voltage d) Leakage current @MCOV e) P.D. Test f) Sealing Test g) Verticality check on completely assembled surge Arrester **(If Applicable)**	Major Critical Critical Critical Critical Major Major	Physical Electrical Electrical Electrical Electrical Physical Physical	100% 100% 100% 100% 100% 100% 1Sample/lot	100% 100% 100% 100% 100% 100% 1Sample/lot	Supplier drg IEC 60099-4 IEC 60099-4 IEC 60099-4 IEC 60099-4 IEC 60099-4 IEC 60099-4	Supplier drg IEC 60099-4 IEC 60099-4 Manufacturer Std IEC 60099-4 IEC 60099-4 IEC 60099-4 Deviation in verticality – not to exceed 10 mm	QA/QC Records	√ √ √ √ √ √ √	P P P P P P P	V V V V V V V	V V V V V V V

INDICATIVE MANUFACTURING QUALITY PLAN

		LEGEND: * RECORDS, INDENTIFIED WITH "TICK" (√) SHALL BE ESSENTIALLY INCLUDED BY SUPPLIER IN QA DOCUMENTATION. ** **M:** MANUFACTURER/SUB-SUPPLIER **C:** MAIN SUPPLIER, **N:** NTPC **P:** PERFORM **W:** WITNESS AND **V:** VERIFICATION. AS APPROPRIATE, **CHP:** NTPC SHALL IDENTIFY IN COLUM "N" AS ' W"		DOC. NO.: REV…… CAT…..
MANUFACTURER/ SUB-SUPPLIER	MAIN-SUPPLIER		FOR NTPC USE	REVIEWED BY / APPROVED BY / APPROVAL SEAL
SIGNATURE				

MFGR.'s LOGO	MANUFACTURER'S NAME AND ADDRESS	INDICATIVE MANUFACTURING QUALITY PLAN		PROJECT :
		ITEM : SURGE ARRESTOR	QP NO.:	PACKAGE :
		SUB-SYSTEM:	REV.NO.:	CONTRACT NO. :
			DATE:	MAIN-SUPPLIER:
			PAGE: …. OF….	

SL. NO	COMPONENT & OPERATIONS	CHARACTERISTICS	CLASS	TYPE OF CHECK	QUANTUM OF CHECK		REFERENCE DOCUMENT	ACCEPTANCE NORMS	FORMAT OF RECORD	AGENCY				REMARKS
					M	C / N				M	C	N		
1.	2.	3.	4.	5.	6.		7.	8.	9.	D *	**	10.		11.
B	Surge Monitor Routine Test	a) Visual Examination b) Dimensions c) i) Counter Operation test ii) Ammeter Operation test d) Seal leak test	Major Major Critical Critical Major	Physical Physical Electrical Electrical Physical	100% 3 Samples/lot 100% 100% 100%	100% 3 Samples/lot 100% 100% 100%	IEC 60099-4 Supplier drg.	Manufacturer Std Supplier drg. Manufacturer Std Manufacturer Std Manufacturer Std	QA/QC Records	√ √ √ √ √	P P P P P	V V V V V	V V V V V	

INDICATIVE MANUFACTURING QUALITY PLAN

		LEGEND: * RECORDS, INDENTIFIED WITH "TICK" (√) SHALL BE ESSENTIALLY INCLUDED BY SUPPLIER IN QA DOCUMENTATION. ** M: MANUFACTURER/SUB-SUPPLIER C: MAIN SUPPLIER, N: NTPC P: PERFORM W: WITNESS AND V: VERIFICATION. AS APPROPRIATE, CHP: NTPC SHALL IDENTIFY IN COLUM "N" AS ' W"		DOC. NO.:	REV…… CAT…..
MANUFACTURER/ SUB-SUPPLIER	MAIN-SUPPLIER		FOR NTPC USE	REVIEWED BY	APPROVED BY / APPROVAL SEAL
SIGNATURE					

MFGR.'s LOGO	MANUFACTURER'S NAME AND ADDRESS	INDICATIVE MANUFACTURING QUALITY PLAN		PROJECT :
		ITEM : SURGE ARRESTOR	QP NO.:	PACKAGE :
		SUB-SYSTEM:	REV.NO.:	CONTRACT NO. :
			DATE:	MAIN-SUPPLIER:
			PAGE: …. OF….	

SL. NO	COMPONENT & OPERATIONS	CHARACTERISTICS	CLASS	TYPE OF CHECK	QUANTUM OF CHECK		REFERENCE DOCUMENT	ACCEPTANCE NORMS	FORMAT OF RECORD	AGENCY			REMARKS
					M	C / N				M	C	N	
1.	2.	3.	4.	5.	6.		7.	8.	9.	D *	** 10.		11.
C	Surge Arresters Acceptance Tests	a) Visual &Dimensions	Major	Physical	Cube root of qty. offered	Cube root of qty. offered	Apprd Drgs	Apprd Drgs	QA/QC Records	√	P	W	W
		b) Reference Voltage test	Critical	Electrical	Cube root of qty. offered	Cube root of qty. offered	IEC 60099-4	IEC 60099-4		√	P	W	W
		c) Residual voltage test	Critical	Electrical	Cube root of qty. offered	Cube root of qty. offered	IEC 60099-4	IEC 60099-4		√	P	W	W
		d) P.D. Test	Critical	Electrical	Cube root of qty. offered	Cube root of qty. offered	IEC 60099-4	IEC 60099-4		√	P	W	W
		e) Galvanizing Test i) Uniformity of Zinc Coating.	Major	Measurement / chemical	1sample / lot	1sample / lot	IS: 3070/2633	IS: 3070/2633		√	P	W	W
		ii) Weight of Zinc Coating.	Major	Measurement / chemical	1sample / lot	1sample / lot	IS:3070/ 6745	IS:3070/ 6745		√	P	W	W

INDICATIVE MANUFACTURING QUALITY PLAN

		LEGEND: * RECORDS, INDENTIFIED WITH "TICK" (√) SHALL BE ESSENTIALLY INCLUDED BY SUPPLIER IN QA DOCUMENTATION. ** **M:** MANUFACTURER/SUB-SUPPLIER **C:** MAIN SUPPLIER, **N:** NTPC **P:** PERFORM **W:** WITNESS AND **V:** VERIFICATION. AS APPROPRIATE, **CHP:** NTPC SHALL IDENTIFY IN COLUM "N" AS ' W"		DOC. NO.:	REV…… CAT…..
MANUFACTURER/ SUB-SUPPLIER	MAIN-SUPPLIER		FOR NTPC USE		
SIGNATURE				REVIEWED BY	APPROVED BY / APPROVAL SEAL

MFGR.'s LOGO	MANUFACTURER'S NAME AND ADDRESS	INDICATIVE MANUFACTURING QUALITY PLAN		PROJECT :
		ITEM : SURGE ARRESTOR	QP NO.:	PACKAGE :
		SUB-SYSTEM:	REV.NO.:	CONTRACT NO. :
			DATE:	MAIN-SUPPLIER:
			PAGE: …. OF….	

SL. NO	COMPONENT & OPERATIONS	CHARACTERISTICS	CLASS	TYPE OF CHECK	QUANTUM OF CHECK		REFERENCE DOCUMENT	ACCEPTANCE NORMS	FORMAT OF RECORD	AGENCY			REMARKS
					M	C / N				M	C	N	
1.	2.	3.	4.	5.	6.		7.	8.	9.	D *	** 10.		11.
D	Surge Monitor Acceptance Tests	a) Visual Examination	Major	Physical	Cube root of qty. offered	Cube root of qty. offered	IEC 60099-4	Manufacturer Std	QA/QC Records	√	P	W	W
		b) Dimensions	Major	Physical	Cube root of qty. offered	Cube root of qty. offered		Supplier drg.		√	P	W	W
		c) i) Counter operation test at 100A & 10KA, 8/20 µ sec.	Critical	Electrical	Cube root of qty. offered	Cube root of qty. offered		Manufacturer Std		√	P	W	W
		ii) Ammeter operation test	Critical	Electrical	Cube root of qty. offered	Cube root of qty. offered		Manufacturer Std		√	P	W	W

INDICATIVE MANUFACTURING QUALITY PLAN

		LEGEND: * RECORDS, INDENTIFIED WITH "TICK" (√) SHALL BE ESSENTIALLY INCLUDED BY SUPPLIER IN QA DOCUMENTATION. ** **M:** MANUFACTURER/SUB-SUPPLIER **C:** MAIN SUPPLIER, **N**: NTPC **P:** PERFORM **W**: WITNESS AND **V:** VERIFICATION. AS APPROPRIATE, **CHP:** NTPC SHALL IDENTIFY IN COLUM "N" AS ' W"		DOC. NO.:	REV…… CAT…..	
MANUFACTURER/ SUB-SUPPLIER	MAIN-SUPPLIER		FOR NTPC USE			
SIGNATURE				REVIEWED BY	APPROVED BY	APPROVAL SEAL

		N C T L L T PL N									
		T M C L N T CT L T L					P N				PP
							N				
		T M		C N M NC T NTPC P C T N			T				
							P				
							L PT				
N	ti it d er ti	C r teri ti i tr me t		C e	T e C e	t m e	e ere e me t	e t e N rm	rm t e rd		em r
	N L M NT										
	Availability of QA& QC manpower and laboratory		-	A	Physical	Once prior to start of work and thereof monthly	Tech Specs and Const. Drawings		SR	√	
	Sampling for testing of buliding materials, concrete mix design etc.		As agreed / required	A	Physical	As specified in FQP for various materials	Tech Specs and Const. Drawings		SR/TR	√	Test report along with the recommendations from specialist agency to be submitted to NTPC.
C	Submission of schedule of tests to be done monthly / quaterly		-	A	Physical	Once prior to start of work and thereof monthly	Tech Specs and Const. Drawings		SR	√	
	Stacking and storage of construction materials and components at site		As per IS:4082	A	Physical	Random	Tech Specs and Const. Drawings and IS: 4082		SR	√	
	C T N N LL N N										
	ti										
		Nature, type of soil/rock before and during excavations	As agreed / required	C	Visual	Random in eah shift	Tech Specs and Const. Drawings		SR		
		Initial ground level before start of excavations	As agreed / required	C	Measurement	100%	Tech Specs and Const. Drawings		SR	√	
		Final shape and Dimensions of excavations.	As agreed / required	C	Measurement	100%	Tech Specs and Const. Drawings		SR		
		Final excavation lelvels	As agreed / required	B	Measuement	100%	Tech Specs and Const. Drawings		SR	√	
		Side slope of final excavation	As agreed / required	B	Measurement	Random in each shift	Tech Specs and Const. Drawings		SR		
	i										
	t d rd r t r Te t	Optimum moisture content and max. dry density before fill	As per IS: 2720, Proctor needle apparatus,etc.	B	Physical	One in every 10000 cum for each type and source of fill materials	IS 2720 (Pt.VII), Tech Specs and Const. Drawings		SR/TR	√	
	M i re te t	Moisture content of fill before compaction	As per IS: 2720, balance, oven, rapid moisture meter, etc.	B	Physical	One in every 10000 cum for each type and source of fill materials	IS 2720 (Pt.II), Tech Specs and Const. Drawings		SR/TR	√	
	e ree C m ti i										
i		Dry density by core cutter method ---- OR---- Dry density in place by sand displacement method	As per IS: 2720/compaction test (core cutter), balance, rapid moisture meter etc.	A	Physical	One sample for every 10000 SQM area for each compacted layer.	IS 2720 (Pt. XXIX), Tech Specs and Const. Drawings OR IS 2720 (Pt. XXVIII), Tech Specs and Const. Drawings		SR/TR	√	

		N C T L L T PL N									
		T M C L N T CT L T L					**P N**				**PP**
				C N M NC T NTPC P C C T N			**N**				
		T M					**T**				
							P				
							L PT				
N	**ti it d er ti**	**C r teri ti i tr me t**		**C e**	**T e C e**	**t m e**	**e ere e me t**	**e t e N rm**	**rm t e rd**		**em r**
	M T L										
	C M NT										
		Physical & Chemical Properties	as per IS:4031	A	Testing	At Random	As per relevant IS Codes/ Tech Specification		TR	√	Each consignment of cement shall be duly correlated with manufactureres TC. One sample from each lot shall be tested for stetting time and compressive strength . If cement is stored more than 60 days in godown of contractor same shall be retested for comp. Strength & setting time.
	C r e re te	Moisture content	as per IS:2386	B	Physical	Once for each stack of 100 Cu.M. or part there of	IS : 456 IS : 383/Tech Spec		SR/LB	√	During monsoon when this has to be done every day before start of concreting
ii		Specific gravity, water absorption	IS:2386	A	Physical	Once for each source & for every change of source	IS: 2386 Part-III, IS:456, IS:383/Tech Spec		SR/LB/ TR	√	
iii		Sieve analysis, flakiness index, elongation index,	IS:2386	B	Physical	One per 100 cum., or part thereof	IS: 2386 Part-I, IS:383/Tech Spec		SR/LB	√	
i		Deleterious materials (coal & lignite, clay lumps, material finer than 75 micron sieve, soft fragment, shale)	IS:2386	A	Physical	Once per source/ on every change of source	IS: 2386 Part-II, IS:383/Tech Spec		SR/LB/ TR	√	
		Soundness	IS:2386	A	Physical	-do-	IS: 2386 Part-V, IS:383		SR/LB/ TR	√	
i		Crushing value abrasion value and impact value	IS:2386	A	Physical	-do-	IS:383, IS-2386 Part IV/Tech Spec		SR/LB/ TR	√	
	i e re te										
i		Moisture content, water absorption	balance , oven, rapid moisture meter etc	B	Physical	To be done every day before start of work	IS: 2386 Part-III IS:383		SR/LB/T R	√	
ii		Deleterious materials (coal & lignite, clay lumps, material finer than 75 micron sieve, soft fragment, shale)	IS:2386	A	Physical	Once per source& for on every change of source	IS: 2386 Part-II, IS:383		SR/LB/T R	√	
iii		All other tests similar to coarse aggregates as mentioned above.					IS-2386, IS-383		SR/LB/T R	√	except test for flankiness index,elongation index, abrasion value, impact value
	ter										
i		Complete tests as per IS:456	Buret, conical flask, pipette etc	B	Testing	One for each source.	IS:3025 part 22 and 23 (for test procedure), IS:456(for acceptance criteria)		SR/LB/T R	√	

		N C T L L T PL N									
		T M C L N T CT L T L					**P N**				**PP**
							N				
		T M		**C N M NC T NTPC P C C T N**			**T**				
							P				
							L PT				
N	**ti it d er ti**	**C r teri ti i tr me t**		**C e**	**T e C e**	**t m e**	**ere e me t**	**e t e N rm**	**rm t e rd**		**em r**
	C NC T										
i		Crushing strength (works Tests cubes)	IS:516	A	Physical	One set of 6 cubes per 50 CuM or part thereof for each grade of concrete per shift whichever is earlier.	IS:516, IS:456, NTPC Tech. Spec.		SR/LB/ TR	√	Min. of 6 cubes for each mix, 3 specimen shall be tested at 7 days remaining 3 shall be for 28 days comp. Strength.
ii		Workability - slump test	IS:1199	B	Physical	At the time of concrete pouring at site every two hrs	IS:456/NTPC Tech. Spec.		SR/LB/T R	√	
	dmi re r C rete	Type of admixture	As per IS:9103	B	Review of MTC	For each lot received at site	Designed mix and IS:9103		MTC	√	Admixture of appd. Brand and tested quality shall be used (each lot of admixture will included with brochure in which the type of admixture and its properties shall be clearly indicated)
	C rete e i m ti										
i		mixing of concrete shall be done in a approved mixer such as to produce a homogenous mix				To be calibrated at the time of starting and subsequently once in three months, and shall conform to IS:4925	Review of calibration chart/ Certificate, IS 4926			√	
ii		Arrangement for transportation & placement of concrete.	As required	C	Visual	100%	Before clearance for concreting		Inspectio n Report	√	
iii		Handling and Transportation of concrete	As required	C	Physical	100%	As per construction/erection methodology (to be approved one week prior to start of		SR		
i		Placement of concrete	Visual	B	Physical	100%	As per construction/erection methodology and tech.specs / No segregation		SR	√	
		Compacting	As required	C	Physical	At Random	IS:456		SR	√	
i		Curing	As required	C	Physical	At Random	Period of curing as per IS 456 (use gunny bags / curing compound)		SR	√	
	T T C C N CC T CT N N C N T N										
i		Dimensional check on finished structures & Dimensional tolerances	As required	B	Measurement	Approved Drawing	As per IS:456/ tech. Specification.		SR/LB	√	
ii		Water Tightness Test of liquid retaining structure/ tanks	As required	B	Test	100%	IS:3370/ Tech. Specification		SR/LB	√	
	N C M NT T L										
i		Physical and Chemical Properties for each lot as per relevant IS codes	As required/ agreed	A	Review of MTC	Each batch of delivery	IS : 1786, IS:432, IS:1566, Tech Specs and Const. Drawings		MTC	√	Applicable if steel is procured by Contractor

		□N□□C□T□□□ □□□L□ □□□L□T□ PL□N									
		□T□M □C□□L □N□ □T□□CT□□□L □T□□L □ □□□□ □□□ □□L□□ P□□□□CT□					**□P N□□□**		**□□□□□□ □□ □□**		**□PP□□□□□ □□**
		□□□□□□T□M □		**C□N□□ □M□NC□ T□□NTPC □P□C□□C□T□□N**			**□□□N□ □□□**				
							□□T□ □				
							P□□□ □				
							□□L□□ □PT□□				
□□N□	**□□ti□it□ □□d □□er□ti□□**	**C□□r□□teri□ti□□ □i□□tr□me□t□**		**C□□□□ □□ □□e□□**	**T□□e □□C□e□□**	**□□□□t□m □□□□e□□**	**□e□ere□□e □□□□me□t**	**□□□e□t□□□e N□rm□**	**□□rm□t □□ □e□□rd**		**□em□r□□**
□	□	□		□	□	□	□	□	□	□□	□□
ii		Freedom from cracks surface flaws, Lamination.	As agreed / required	C	Visual	Random in each shift	IS: 1852, IS:432, IS:1786, Tech Specs and Const. Drawings		SR		To be checked at site. Steel collected from source should be free from excessive rust. To be stored as per Technical Specs.
□□□PL□C□M□NT □□ □□□N□□□C□M□NT □T□□L											
i		Bar bending schedule with necessary lap, Spacers & Chairs	As agreed / required	B	Visual & Measurement	Random in each shift	Approved Drawings, Tech Specs and Const. Drawings, IS:2502		SR	√	
ii		Bending of bars, cutting tolerance	As agreed / required	C	Visual & Measurement	Random in each shift	Approved Drawings, Tech Specs and Const. Drawings, IS:2502		SR	√	
iii		Acceptance - Cover, spacing of bars, spacers and chairs after the reinforcement cage is put inside the formwork	As agreed / required	B	Visual & Measurement	Random in each shift	Approved Drawings, Tech Specs and Const. Drawings		SR	√	
□□□□□T□□□N□ □N□ □□□M□											
i		Materials and accessories	As agreed / required	C	Visual	Once before start of work	As per relevant IS, Tech Specs and Const. Drawings		SR		
ii		Soundness of staging, shuttering and scaffolding including application of mould oil / release agent	As agreed / required	C	Visual	Once before start of work	As per manufacturer's spec.and as per 3696,4014, 4990, Tech Specs and Const. Drawings		SR		
iii		Acceptance of formwork before start of concreting		B	Physical / visual	Before start of each concreting	As per provisions and tolerances, Tech Specs and Const. Drawings		SR	√	
□□□□□MP P□□□□C□□□□□							Tech Specs and Const. Drawings				
i		Material - Hot bitumen and water proofing materials etc	As agreed / required	B	Review of MTC	Each batch of delivery at site	Tech Specs and Const. Drawings, IS 702		SR	√	
ii		Acceptance of damp proof course	As agreed / required	B	Acceptance	100%	Tech Specs and Const. Drawings		SR		
□□□□□□□□T□N□											
i		Material	As agreed / required	B	Review of MTC	Each batch of delivery	Tech Specs and Const. Drawings		SR	√	
		Type of mix - fluid mix, plastic mix, stiff mix etc.	As agreed / required	C	Physical	Prior to start of work	Tech Specs and Const. Drawings		SR	√	
ii		Mixing, placement, application and grout pressure	As agreed / required	C	Physical	Random in each shift	Tech Specs and Const. Drawings		SR		
iii		Compressive strength	As agreed / required	C	Physical	Random in each shift	Tech Specs and Const. Drawings		SR	√	
i□		Acceptance of the grouts	As agreed / required	B	Physical	Each grout section	Tech Specs and Const. Drawings		SR		

		N C T L PL N									
		T M C L N T CT L T L					**P N**				**PP**
		L P CT									
				C N M NC T NTPC P C T N			**N**				
		T M					**T**				
							P				
							L PT				
N	**ti it d er ti**	**C r teri ti i tr me t**		**C e**	**T e C e**	**t m e**	**ere e me t**	**e t e N rm**	**rm t e rd**		**em r**
	C M N										
	Te t ri										
		Dimensions , shape, compressive strength, water absorption, warpage, efflorescence.	As agreed / required	B	Measurement/ Physical Test	As per relevant IS Code/ One Sample for 30,000 nos. or part thereof	IS: 1077, IS:13757, IS: 12894 / Tech Specs and const. Drawings		Inspection Report	√	Efflorescence shall be checked at each source.
	M r tr ti	Workmanship, verticality and alignment	As agreed / required	B	Visual/ Physical	100%	IS 2212, IS 1905 , Tech Specs and Const. Drawings		SR/LB		
	N N N LL								.		
	PL T N M N P										
i		Curing	As agreed / required	C	Physical	100%	Tech specifications, construction drawings and agreed methodology		SR		
ii		Thickness and finishing of plaster, grooves etc	As agreed / required	B	Visual/ Measurement	Random in each shift	Tech Specs and Const. Drawings		SR/LB		
iii		Truness of plastering system	As agreed / required	B	Visual/ Physical	Random in each shift	Tech Specs and Const. Drawings		SR		
	T N N T										
	P NT N T M C NC T N PL T M N C										
i	Materials and accessories- Oil Bound, Acrylic Emulsion, Chemical Resistant, Oil Resistant Paint etc.	Shade, type from brand and manufacturer as approved by NTPC EIC	As agreed / required	B	Review of MTC	Each batch of delivery	Tech Specs and Const. Drawings		SR/MTC	√	
ii	Surface prepration	As required	As agreed / required	C	Physical /visual	Random in each shift	Tech Specs and Const. Drawings		SR		
iii	Acceptance of painted surfaces	As required	As agreed / required	B	Physical	Each surface at random	Tech Specs and Const. Drawings		SR		
	P NT N T M T L T N T CT L T L										
i		Paining Materials and accessories	-	B	Review of MTC	Each batch of delivery	Tech Specs and Const. Drawings		SR/MTC	√	
ii		Surface prepration	As agreed / required	C	Physical /visual	Each Erection Mark	Tech Specs and Const. Drawings, Relevant code/ standards		SR	√	
iii		Primer Thickness	Elcometer	C	Measurement	Each Erection Mark	Tech Specs and Const. Drawings		SR	√	
i		DFT of paint	Elcometer	C	Measurement	Each Erection Mark	Tech Specs and Const. Drawings		SR	√	
		Acceptance of painted surfaces	Elcometer	B	Visual and measurement	Each Erection Mark	Tech Specs and Const. Drawings		SR		
	T P N										
		Methodology for the application of water proofing system	As required	B	Review	for each type of treatment	Tech Specs and Const. Drawings		SR	√	
	eme t Tre tme t										
i	Graded under bed	Levels / slopes	As required	C	Physical	100%	Tech Specs and Const. Drawings				
ii	Elastomaric coatings	Material- Primer coat, finishing coat	As required	B	Review of MTC	Each lot of delivery	Tech Specs and Const. Drawings		SR	√	

		N C T L L T PL N									
		T M C L N T CT L T L					**P N**				**PP**
				C N M NC T NTPC P C T N			**N**				
		T M					**T**				
							P				
							L PT				
N	**ti it d er ti**	**C r teri ti i tr me t**		**C e**	**T e C e**	**t m e**	**e ere e me t**	**e t e N rm**	**rm t e rd**		**em r**
iii	Wearing course	Materials - PCC, chicken wire mesh, elastomeric sealant	As required	B	Review of MTC	Each lot of delivery	Tech Specs and Const. Drawings		SR	√	
i		Acceptance of water proofing work	As agreed / required	B	Physical	100%	Tech Specs and Const. Drawings				
	e i d te										
i	PVC coated chain link fencing, Welded wire mesh (IS 1566), Reinforced barbed tape galvanised (IS 2629) etc.	Materials	As agreed / required	B	Review of MTC	Each batch of delivery	Tech Specs and Const. Drawings		SR/MTC	√	MTC shall contain all the parameters specified in the technical specifications / relevant IS Codes
ii		Acceptance of the installation	As agreed / required	B	Physical / measurements	Each installation	Tech Specs and Const. Drawings		SR		
	L N L										
	Ceme t C rete ri										
i		Glass/ PVC strips in joints	As agreed / required	C	Physical	Random in each shift	Tech Specs and Const. Drawings		SR		
ii		Finishing and acceptance	As agreed / required	B	Physical	100%	Tech Specs and Const. Drawings		SR		
	Ti e										
i	**Cer mi itri ied m i id re t t e d t eme t rete ti e**	Materials	As agreed / required	B	Review of MTC	Each lot of delivery	Tech Specs and Const. Drawings		SR	√	MTC shall contain all the parameters specified in the technical specifications / relevant IS Codes
ii		Finishing and acceptance	As agreed / required	B	Physical	100%	Tech Specs and Const. Drawings		SR		
	t t e r ite d M r e										
i		Quality, texture, thickness, colour for each lot of delivery from approved source	As agreed / required	C	Physical	Each batch of delivery	Tech Specs and Const. Drawings		SR	√	
ii		Finishing and acceptance	As agreed / required	B	Physical	100%	Tech Specs and Const. Drawings		SR		
	T PPL N T N LL T N										
	ter itti d i t re										
i	Materials	GI/ MS pipes and fittings	As agreed / required	B	Review of MTC	Each lot of delivery as per Specifications	Tech Specs and Const. Drawings		SR	√	
ii	Disinfection	Before use	As agreed / required	C	Physical	Each installation	Tech Specs and Const. Drawings		SR		
iii	Hydraulic test	Before use / leakage	As agreed / required	B	Physical	Each installation	Tech specs and const drawings		SR	√	
i		Acceptance and working	As agreed / required	A	Acceptance	Random	Tech Specs and Const. Drawings		SR		
	d t ir t ir i e										
i	**M teri**	SCI / CI pipes and fittings / joints	As agreed / required	B	Review of MTC	Each lot of delivery as per Specifications	Tech Specs and Const. Drawings		SR	√	
ii		Acceptance and leakage	As agreed / required	B	Physical	Random	Tech Specs and Const. Drawings		SR		

		□N□□C□T□□□ □□□L□ □□□L□T□ PL□N									
		□T□M □C□□L □N□ □T□□CT□□□L □T□□L □ □□□□ □□□ □□L□□ P□□□□CT□					□P N□□□		□□□□□□ □□ □□	□PP□□□□□ □□	
		□□□□□□□T□M □		C□N□□ □M□NC□ T□□NTPC □P□C□□□C□T□□N			□□□□N□ □□□ □□T□ □ P□□□ □				
							□□L□□ □PT□□				
□□N□	□□ti□it□ □□d □□er□ti□□	C□□r□□teri□ti□□ □i□□tr□me□t□		C□□□□ □□ □□e□□	T□□e □□C□e□□	□ □□□t□m □ □□□e□□	□e□ere□□e □□□□me□t	□□□e□t□□□e N□rm□	□□rm□t □□ □e□□rd		□em□r□□
□	□	□		□	□	□	□	□	□	□□	□□
□□	□□□it□r□ □itti□□□ □□d □i□t□re□										
i	M□teri□□	Sanitory items and fixtures i.e. water closets, urinals, wash basins, sinks, mirrors, shelves, towel rail, soap containers, geyser, water cooler, etc, water supply / sanitation pipes, manhole cover and frames etc	As agreed / required	B	Physical	Each lot of delivery as per Specifications	Tech Specs and Const. Drawings		SR	√	
ii		Acceptance of installations of all sanitory items and fixtures	As agreed / required	B	Acceptance	100%	Tech Specs and Const. Drawings		SR		
□□	□CC Pi□e□										
i	Material	RCC pipes	As agreed / required	B	Review of MTC	Each lot of delivery as per Specifications	Tech Specs and Const. Drawings /IS 458		SR	√	
ii		Acceptance and leakage	As agreed / required	B	Physical	Random	Tech Specs and Const. Drawings		SR		
□□	□ □ter □t□r□□e T□□□□										
i	Material	Over head / loft type	As agreed / required	B	Physical	Each lot of delivery as per Specifications	Tech Specs and Const. Drawings		SR	√	
ii		Aceptance and leakage	As agreed / required	B	Acceptance	Random	Tech Specs and Const. Drawings		SR		
□□	□P□C□□L □T□M□										
□□	□□rt□i□□ M□t □□r□□□di□□ □□□tem□										
i	Material	Earthing mat	As agreed / required	B	Physical	Each lot of delivery as per Specifications	As per relevant IS and Tech. Specs / Manufacturer's, IS 3043		SR/MTC	√	
ii		Weld sizes & length	Visual/Tape	B	Visual/ Measurement	100%	Tech Specs and Const. Drawings				NTPC approved electrodes shall be used
iii		D P test	DP test Kit	B	Physical	10% at random of the offered lot	Tech Specs and Const. Drawings		TR	√	
i□		Earth test	Earthing test kit	A	Physical	100%	Tech Specs and Const. Drawings,		SR	√	
□□□□	□□□□ □ □□□□										
□□□	C□□□tr□□ti□□ □□□□□□□r□de □□d e□rt□e□□□□rd □□□□der□										
i		Standard proctor Test to determine optimum moisture content and max. dry density	As per IS: 2720, Proctor needle apparatus,etc.	A	Physical	One in every 2000 cum for each type and source of fill materials			SR/TR	√	
ii		Moisture content of fill before compaction	As per IS: 2720, balance, oven etc.	B	Physical	One in every 2000 cum for each type and source of fill materials			SR/TR		
iii		Dry density by core cutter method ---- OR---- Dry density in place by sand displacement method	As per IS: 2720/compaction test (core cutter), balance etc.	A	Physical	One in every 500 SQM area for each compacted layer.			SR/TR	√	

		N C T L L T PL N									
		T M C L N T CT L T L					**P N**				**PP**
							N				
		T M		**C N M NC T NTPC P C C T N**			**T**				
							P				
							L PT				
N	**ti it d er ti**	**C r teri ti i tr me t**		**C e**	**T e C e**	**t m e**	**ere e me t**	**e t e N rm**	**rm t e rd**		**em r**
r r r e							As per Technical Specifications/ BOQ /IRC/MORTH				
i		Gradation	As required / agreed	B	Physical	One test per 200 cum of aggregate			SR	√	
ii		Atterberg Limit	As per IS: 2720	B	Physical	One test per 200 cum of aggregate			SR	√	
iii		Moisture content prior to compaction	As per IS: 2720	B	Physical	One test per 250 SQM of aggregate			SR	√	
i		Density of compacted layer	As per IS: 2720	A	Physical	One test per 500 SQM of aggregate			SR / TR	√	
		Deleterious constituents	As required / agreed	B	Physical	As required			SR	√	
i		CBR	As per IS: 2720	B	Physical	As required			SR / TR	√	
	ter d M d m N it mi										
i		Aggregate Impact value	Agrregate Impact value Test Apparatus	A	Physical	One test per 200 cum of Test aggregate			SR	√	
ii		Grading	Set of IS Sieves	B	Physical	One test per 100 cum of aggregate			SR		
iii		Flakiness index and elongation index	Flakiness test gauge	B	Physical	One test per 200cun of agregate			SR		
i		Atterberg Limits of binding material	Atterberg limits determination	A	Physical	One test per 25 cum of binding material			SR	√	
		Atterberg Limits of portion of agreggate passing 425 micron sieve	Atterberg limits determination	A	Physical	One test per 100cum of aggregate			SR	√	
	it mi r i e r ded remi r et d e t						As per Technical Specifications/ BOQ /IRC/MORTH				
i		Quality of binder	Penetrometre with St. needle	A	Physical	No. of samples per Lot & tests as per IS:73, IS:217, IS:8887 as applicable			SR	√	
ii		Aggregate Impact Value / Los angeles abrasion value	Aggregate Impact ValueTest apparatus	A	Physical	One test per 50 cum of aggregate			SR	√	
iii		Flakiness Index and elongation indexof aggregates	Flakiness test gauge	B	Physical	One test per 50 cum of aggregate			SR		
i		Stripping value of aggregate (Immersion tray test)	As required / agreed	B	Physical	Initialy one set of 3 representative specimen per source, and on every change of source.			SR		

		N C T L L T PL N									
		T M C L N T CT L T L					**P N**				**PP**
							N				
		T M		**C N M NC T NTPC P C C T N**			**T**				
							P				
							L PT				
N	**ti it d er ti**	**C r teri ti i tr me t**		**C e**	**T e C e**	**t m e**	**ere e me t**	**e t e N rm**	**rm t e rd**		**em r**
		Water absorption test		A	Physical	Initialy one set of 3 representative specimen per source, and on every change of source.			SR	√	
i		Water sensitivity of mix	As required / agreed	A	Physical	Initialy one set of 3 representative specimen per source, and on every change of source.			SR	√	
ii		Grading of aggregates	Set of Sieves	B	Physical	One test per 25 cum of aggregates	As per Technical Specifications/ BOQ /IRC/MORTH		SR		
iii		Soundness (Magnesium and Sodium Sulphate)	As required as per IS:2386	A	Physical	Once per source by each method and on every change of source			SR	√	
i		Polished stone value	As required as per BS:812(Part 114)	B	Physical	As required			SR		
		Temperature of binder at application	Thermometer	B	Physical	At regular close intervals			SR		
i		Binder content	Bitumen extractor	A	Physical	One test per 500 cum& not less than two tests per day			SR	√	
ii		Rate of spread of materials	As required / agreed	B	Physical	One test per 500 cum and not less than 2 tests per day			SR		
iii		Percentage of fractured faces	Bitumen extractor	A	Physical	When gravel is used one test per 50cum of aggregates			SR	√	
	T C t Prime t t										
i		Quality of binder	Penetrometre with Standard needle	A	Physical	No. of samples per Lot & tests as per IS:73, IS:217, IS:8887 as applicable			SR	√	
ii		Temperature of binder at application	Thermometer	B	Physical	At regular close intervals			SR		
iii		Rate of spread of binder	As required / agreed	B	Physical	One test per 500 cum and not less than 2 tests per day			SR		

		N C T L T PL N									
		T M C L N T CT L T L					**P N**				**PP**
		L P CT									
				C N M NC T NTPC P C C T N			**N**				
		T M					**T**				
							P				
							L PT				
N	**ti it d er ti**	**C r teri ti i tr me t**		**C e**	**T e C e**	**t m e**	**e ere e me t**	**e t e N rm**	**rm t e rd**		**em r**
	i me t Le e r re rit d re ti i ti										
		Horizontal alignment, Surface levels and Surface regularity	As required / agreed	B	Physical	As per section 900 of MORTH specification	As per Technical Specifications/ BOQ/ Referred Standards and construction drawings		SR		
		Rectification	As required / agreed	B	Physical	Each rectification	As per Technical Specifications/ BOQ/ Referred Standards and construction drawings		SR	√	
	T CT L T L M T L r ite ri ti										
i	Procured by contractor	Structural steel procured from NTPC approved sources- Mechanical (YS, UTS, Elg, UT if specified),,and Chemical properties (CE as per IS)		A	Review	For each batch of each section delivered at site	Technical Specification and Construction Drawings, IS 2062		SR	√	Correlated MTC shall be verified.
	P L N M NT										
i		Welding Procedure Specification * (WPS)	-	A	Review	Each Welding Process	Technical Specification and Construction Drawings, ASME-IX/ AWS D 1.1		WPS	√	*To be approved by CQA
ii		PQR and Welder's Qualification	-	A	Physical	Each welder	PQR/ WQR, AWS-D1.1/ASME-IX,		TR	√	
iii		Welding consumables	-	B	Physical	Random in each shift	Approved WPS, Latest NTPC		SR	√	
	T P										
i		Marking and Cutting	Tape, ruler etc	B	Visual & Measurement	Each plate/ Section	Technical Specification and Construction Drawings/ Approved cutting plan		SR		
ii		Match markings for trial assembled components	-	B	Physical	Each fit-up	Technical Specification and Construction Drawings		SR		
iii		Weld Fit Up- Edge Preparation/ Gap/ Alignment	Tape, ruler etc	B	Physical	Each fit-up	Technical Specification and Construction Drawings, IS 7215		SR	√	If required suitable stiffners shall be provided to prevent deflection.
	P T N er e										
i		Pre-Heating Temperature	Thermal chalk	B	Measurement	Each pre-heating	Technical Specification and Construction Drawings, Approved WPS		SR	√	
ii		Post Weld Heat Treatment (PWHT), if required	Thermo couple with time temperature recorder	A	Time & Temperature	Each PWHT	Technical Specification and Construction Drawings, Approved WPS		SR	√	
	L N M NT										
i		Sequence of welding	-	B	Physical	Random in each shift	Technical Specification and Construction Drawings, Agreed scheme		SR		
ii		Removal/ grinding of temporary attachments	-	B	Measurement	All cleats/ attachments	Technical Specification and Construction Drawings, Approved Drg.		SR		
iii		Completeness after welding- Dimensions/ distortion	Weld gauge	B	Visual	Each structure component	Technical Specification and Construction Drawings, IS 822		SR	√	

		N C T L N									
		T M C L N T CT L T L					**P N**				**PP**
				C N M NC T NTPC P C C T N			**N**				
		T M					**T**				
							P				
							L PT				
N	**ti it d er ti**	**C r teri ti i tr me t**		**C e**	**T e C e**	**t m e**	**e ere e me t**	**e t e N rm**	**rm t e rd**		**em r**
i		Completeness of welding (each butt & fillet weld)		B	Visual	Each structure component	Technical Specification and Construction Drawings, Approved Drg.		SR	√	
	N N T CT N T CT T T N										
	LL T L										
i		size and visual examination	As required/ agreed	B	Visual/ Measurement	100%	As per technical specifications and construction drawings, IS 822, AWS D 1.1		SR		As per requirement of NTPC Engineer
ii		Dye Penetration Test	As required/ agreed	B	Physical	5% of Weld length with min. 300mm at each loaction	As per technical specifications and construction drawings, IS 822, AWS D 1.1		SR		
	TT L										
i		Visual examination	As required/ agreed	B	Visual	Random in each shift	As per technical specifications and construction drawings, IS 822, AWS D 1.1		SR		As per requirement of NTPC Engineer
ii		DPT	As required/ agreed	B	Physical	100% on all butt welds after back gouging on root run and 10% on final weld.	As per technical specifications and construction drawings, IS 822, AWS D 1.1		IR		All butt welds to be back gouged before DPT
iii		Radiography Test	As required/ agreed	A	Physical	10%	As per technical specifications and construction drawings, IS 822, AWS D 1.1		IR	√	Wherever RT is not feasible UT to be carried out. In case of failure of any welds in SPOT/RT or UT the % of retesting shall be doubled at that particular loaction. Acceptance criteria of NDT on welds shall be as per AWS D1.1.
	N T N C C										
i		Dimensions and levels- Shape, lines (including diagonal checks)	Theodolite, Tape etc	B	Physical/ Measurement	Each Foundation	Tech Specs and Const. Drawings		SR	√	
ii		Foundation Bolts and Embedments- Verticality, Levels, pitch distance	Theodolite, Tape, Piano wires etc	B	Physical/ Measurement	Each Foundation	Tech Specs and Const. Drawings		SR	√	
	P NT N T M										
i		Paining Materials and accessories	-	A	Review of MTC	Each batch of delivery	Tech Specs and Const. Drawings		SR/MTC	√	Mfr.'s T.C. shall be correlated with the consignment received.
ii		Submission of painting methodology	-	B	For Review of painting system	Before start of painting work	Tech Specs and Const. Drawings				
iii		Surface prepration	As agreed / required	B	Physical /visual	Each Erection Mark	Tech Specs and Const. Drawings,		SR	√	
i		Primer Thickness	Elcometer	B	Measurement	Each Erection Mark	Tech Specs and Const. Drawings		SR	√	
		DFT of paint	Elcometer	B	Measurement	Each Erection Mark	Tech Specs and Const. Drawings		SR	√	
i		Acceptance of painted surfaces	Elcometer	B	Visual and measurement	Each Erection Mark	Tech Specs and Const. Drawings		SR		
	P M L C C										
i		Punch Erection marks and match marks on members	-	B	Visual/ Physical	Each structural member	Tech Specs and Const. Drawings				Markings for - Assembly designation, Part number, Weight, Any other important

		N C T L L T PL N									
		T M C L N T CT L T L					**P N**				**PP**
							N				
		T M		**C N M NC T NTPC P C C T N**			**T**				
							P				
							L PT				
N	**ti it d er ti**	**C r teri ti i tr me t**		**C e**	**T e C e**	**t m e**	**ere e me t**	**e t e N rm**	**rm t e rd**		**em r**
ii		Pre-assembly as per match mark	-	B	Visual/ Physical	Each structural member	Tech Specs and Const. Drawings				
iii		Camber, sweep and total length after trial assembly of structure.	Theodolite, Tape, plumb, piano wires etc	B	Visual/ Physical	Each structural member	Tech Specs and Const. Drawings		SR	√	
i		Control assembly check at shop	Theodolite, Tape, plumb, piano wires etc	B	Visual/ Physical	Every first and tenth set of identical structure	Tech Specs and Const. Drawings				
		Completion of primer & intermediate coat of paint		B	Visual / Physical	Random	Tech Specs and Const. Drawings		SR		
	CT N C C										
i		Alignment, slopes, level, tolerances of erected member	Theodolite, Tape, plumb, piano wires etc	B	Measurement	Each structural member	Tech Specs and Const. Drawings		SR	√	
ii		Tightening of bolts/ Torque including foundation bolts with lock nuts	Wrench/ Torque wrench if specified	B	Visual/ Physical	Each structural member	Tech Specs and Const. Drawings		SR	√	
iii		Completion of all erection fillet & butt welds		B	Visual	Each structural member	Tech Specs and Const. Drawings		SR	√	
i		Acceptance of erected structure	Theodolite, Tape, plumb, piano wires etc	B	Visual/ Physical	Each erected structure	Tech Specs and Const. Drawings, IS 7215 and IS 12843		SR	√	
	P M N NT LT N N T N										
i		Material- Permanent mild steel Bolts, mild steel Nuts, High strength structural Bolts, Washers-Dimensions, properties, Class, storage along with MTC	Screw gauge, Vernier, Tape etc.	A	Physical and MTC Review	Once for each lot of delivery	Tech Specs and Const. Drawings		SR/MTC	√	
ii		Contact surfaces before bolting	-	B	Physical	Random before asembly for bolting	Tech Specs and Const. Drawings, IS 4000		SR		
iii		Inspection of the assembled bolts	-	B	Physical	Randomly in each shift for assembeled bolts	Tech Specs and Const. Drawings, IS 4000		SR		
i		Tensioning	As agreed / required	B	Physical	Randomly during snug tight test and after full tensinoning	Tech Specs and Const. Drawings, IS 4000		SR	√	
		Acceptance of installed bolts	-	B	Physical	Each bolt	Tech Specs and Const. Drawings		SR		

Le e d t e ed C Criti M r C Mi r ite e i ter T Te t e rt M rTC M t rer Te t Certi i te

C te ri ti it e i e ti er NTPC tem
C te r i eer i i ti it e ti i eer C te r e ti i eer C te r C e ti i eer

rm t N P i

		T□M : □□T □P □□L□□N□□□□ L□TT□C□ □T□□CT□□□ □□□ □□ □TC□□□□□			N□□C□T□□□ □□□L□T□ PL□N					□P□N□□				□□□□□□ □□ □□	□PP□□□□□ □□
										□e□N□□□□					
					C□N□□□M□N□ T□ C□□□ □ □□ □□□C □NTPC T□C□N□C□L □P□C□□C□T□□N					□□te□					
										□□L□□ □PT□□					
□□N□	COMPONENT & OPERATIONS	CHARACTERISTICS		CLASS	TYPE OF CHECK	QUANTUM OF CHECK		REFERENCE DOCUMENT	ACCEPTANCE NORMS	FORMAT OF RECORD		AGENCY			REMARKS
						6 M	6 C/N					M	C	N	
□	2		3	4	5			7	8	9	D*	**	10		11
□□□□	□□□ M□teri□□□□□□□□t □□t □tem C□e□□□□														Steel to be procured from NTPC approved Main Steel Producers.
□□□□	□□t □r□□ed □tr□□t□r□□□tee□ □□□e □e□ti□□□ □□r□ □ P□□te□	a	Chemical composition	Major	Chemical	1 sample/ 40 MT or part thereof for each class of product	1 sample/ 40 MT or part thereof for each class of product	NTPC □□□d □r□ □□□□□□□ □□□□□□□ □□□□□□□ □□□□□□□ □□□□□□□	NTPC □□□d □r□ □□□□□□□ □□□□□□□ □□□□□□□ □□□□□□□ □□□□□□□	Mfr. Test Certificate	√	P	V	-	
		b	Tensile Test (TS,YS, % Elongation	Major	Mechanical	1 sample/ 40 MT or part thereof for each class of product	1 sample/ 40 MT or part thereof for each class of product				√	P	V	-	
		c	Bend Test	Major	Mechanical	1 sample/ 40 MT or part thereof for each class of product	1 sample/ 40 MT or part thereof for each class of product				√	P	V	-	
		d	Visual Check for surface finish	Major	Visual	100%	100%				√	P	V	-	
		e	Dimension	Major	Measure	As Per IS:2500 SSP Level-I AQL	As Per IS:2500 SSP Level-I AQL	□□□□□□ □□□□□□□ □□□□□□□P□□□□□□□	□□□□□□ □□□□□□□ □□□□□□□ P□□□□□□□	TR	√	P	V	V	
		i)	For angle-Leg-length, out of squareness, camber-weight												
		ii)	For Bars-Diameter, Ovality												
		iii)	For Plates:-Thickness, Weight												
□□□	□i□□		Chemical composition	Major	Measure	One sample/Lot	One sample/Lot IS: 209		IS:209, Zn-99.95%	Producers' TC/ Check Test report	√	P	V	V	Wherever Manufacturer's Test Certificate is not available. Check Test Report to be produced from recognised test house.

		T M : T P L N L TT C T CT TC			N C T L T PL N C N M N T C NTPC T C N C L P C C T N					P N e N te L PT					PP
N	COMPONENT & OPERATIONS	CHARACTERISTICS		CLASS	TYPE OF CHECK	QUANTUM OF CHECK		REFERENCE DOCUMENT	ACCEPTANCE NORMS	FORMAT OF RECORD		AGENCY			REMARKS
						6 M	6 C/N					M	C	N	
	2		3	4	5			7	8	9	D*	**	10		11
	N P C N P CT N														
	ri ti t er rt	a)	Straightening	Major	Visual	100%	100%	IS:802-P-II Approved drgs Shop Sketches	IS:802-P-II	Fabricator's inspection Report.	-	P	V		
		b)	Cropping (cutting)	Major	Visual	1st Piece & every 50th Piece	1st Piece & every 50th Piece	IS:802-P-II Approved drgs Shop Sketches	IS:802-P-II	Fabricator's inspection Report.	-	P	V		
		c)	Stamping	Major	Visual	100%	100%	Approved drgs/ NTPC Spec.	Approved drgs/ NTPC Spec.	Fabricator's inspection Report.	-	P	V		
		d)	Making hole by punching /drilling	Major	Measure	1st Piece & every 50th Piece	1st Piece & every 50th Piece	IS:802-P-II	IS:802-P-II	Fabricator's inspection Report.	-	P	V		
		e)	Edge Security	Major	Measure	1st Piece & every 50th Piece	1st Piece & every 50th Piece	IS:802-P-II	IS:802-P-II	Fabricator's inspection Report.	-	P	V		
		f)	Hole to Hole distance	Major	Measure	1st Piece & every 50th Piece	1st Piece & every 50th Piece	IS:802-P-II	IS:802-P-II	Fabricator's inspection Report.	-	P	V		
		g)	Overall length of members	Major	Measure	1st Piece & every 50th Piece	1st Piece & every 50th Piece	IS:802-P-II	IS:802-P-II	Fabricator's inspection Report.	-	P	V		
		h)	Gauge distance	Major	Measure	1st Piece & every 50th Piece	1st Piece & every 50th Piece	IS:802-P-II	IS:802-P-II	Fabricator's inspection Report.	-	P	V		
		i)	Notching Flange cut ,Corner Cut & Level Cut	Major	Measure	1st Piece & every 50th Piece	1st Piece & every 50th Piece	IS:802-P-II	IS:802-P-II	Fabricator's inspection Report.	-	P	V		
		j)	Heel Grinding	Major	Measure	1st Piece & every 50th Piece	1st Piece & every 50th Piece	IS:802-P-II	IS:802-P-II NTPC Spec./ Approved drgs	Fabricator's inspection Report.	-	P	V		
		k)	Bending MS Section	Major	Measure	100%	100%	IS:802-P-II	IS:802-P-II NTPC Spec./ Approved drgs	Fabricator's inspection Report.	-	P	V		
		l)	Bending MS Plate	Major	Measure	1st Piece & every 50th Piece	1st Piece & every 50th Piece	IS:802-P-II	IS:802-P-II NTPC Spec./ Approved drgs	Fabricator's inspection Report.	-	P	V		
		m)	Other dimensions	Major	Measure	1st Piece & every 50th Piece	1st Piece & every 50th Piece	IS:7215	IS:7215	Fabricator's inspection Report.	-	P	V		

		T M : T P L N L TT C T CT TC			N C T L T PL N C N M N T C NTPC T C N C L P C C T N					P N e N te L PT					PP
N	COMPONENT & OPERATIONS	CHARACTERISTICS		CLASS	TYPE OF CHECK	QUANTUM OF CHECK		REFERENCE DOCUMENT	ACCEPTANCE NORMS	FORMAT OF RECORD		AGENCY			REMARKS
						6 M	6 C/N					M	C	N	
	2		3	4	5			7	8	9	D*	**	10		11
	e di i et e d														
	Welding Procedure Specification	a)	Suitability	Critical	Verify	100%	100%	IS:822 / ASME-SEC-IX	IS:822 / ASME-SEC-IX	QW-482	√	P	V	V	WPS to be submitted for approval. Butt joint in lattice and pipe are not allowed.
	Procedure Qualification	a)	Qualification	Critical	Physical	As per IS/ASME-SEC - IX	As per IS/ASME-SEC - IX	IS:822 / ASME-SEC-IX & WPS	IS:822 / ASME-SEC-IX & WPS	QW-483	√	P	W	W	
	Welder Performance Qualification	a)	Qualification	Critical	Physical	As per IS/ASME-SEC - IX	As per IS/ASME-SEC - IX	IS:822 / ASME-SEC-IX & WPS	IS:822 / ASME-SEC-IX & WPS	QW-484	√	P	W	W	
	e ti e d	a)	welds size	Major	Physical	100%	10% Random	Approved Dags	Approved Dags	Inspection	√	P	V		
		b)	weld Quality	Critical	DPT	100%	10% Random	ASTME-E-165	ASTME-E-165	Records	√	P	W		
	Inspection of fabrication parts (Black)before galvanising	a)	a) Dimension to 2.1	Major	Measure	IS:2500-P-1 ,AQL, SSP Level-II	IS:2500-P-1 ,AQL, SSP Level-II	Approved Dags IS:802-P-II	Approved Dags IS:802-P-II	Inspection Records	√	P	W		
		b)	Surface finish	Major	visual	IS:2500-P-1 ,AQL, SSP Level-II	IS:2500-P-1 ,AQL, SSP Level-II	Approved Dags IS:802-P-II	Approved Dags IS:802-P-II	Inspection Records	-	P	V	-	
	Proto Assembly	a)	Dimensions	Critical	Assembly	100%	One Structure of each type	NTPC Appd Drgs Shop Sketch	NTPC Appd Drgs Shop Sketch	Inspection Records	√	P	W	W	
		b)	Fit-up/ Fowling/Notching	Critical	Assembly	100%	One Structure of each type	NTPC Appd Drgs Shop Sketch	NTPC Appd Drgs Shop Sketch	Inspection Records	√	P	W	W	
	Revision of Drawings/Shop sketch on Proto feedback	a)	Revisions of Drawings (For re-approval)	Major	Review	Wherever effected		NTPC Appd Drgs Shop Sketch	NTPC Appd Drgs Shop Sketch	Inspection Records	√	P	V	V	Revised Drawings to be submitted for NTPC Approval
	L N N														
	Degreesing	a)	Solution strength	Major	visual	1 Sample daily	1 Sample daily	IS:2629	IS:2629	Galvaniser's QC Records	√	P	V	V	Galvanising to be done at NTPC Approved Galvaniser only.
		b)	PH Value	Major	Chem	1 Sample daily	1 Sample daily	IS:2629	IS:2629	Galvaniser's QC Records	√	P	V	V	

		T M : T P L N L TT C T CT TC			N C T L T PL N C N M N T C NTPC T C N C L P C C T N					P N e N te L PT					PP
N	COMPONENT & OPERATIONS	CHARACTERISTICS		CLASS	TYPE OF CHECK	QUANTUM OF CHECK		REFERENCE DOCUMENT	ACCEPTANCE NORMS	FORMAT OF RECORD		AGENCY			REMARKS
						6 M	6 C/N					M	C	N	
	2		3	4	5			7	8	9	D*	**	10		11
	Rinsing	a)	Cleanliness	Major	Visual	100%	100%	IS:2629	IS:2629	Galvaniser's QC Records	√	P	V	V	Galvanising to be done at NTPC Approved Galvaniser only.
	Picking	a)	Acid Content	Major	Chem	1 Sample daily	1 Sample daily	IS:2629	IS:2629	Galvaniser's QC Records	√	P	V	V	
		b)	Iron Content	Major	Chem	1 Sample daily	1 Sample daily	IS:2629	IS:2629	Galvaniser's QC Records	√	P	V	V	
	Rinsing		Cleanliness(Mill scale paint marks etc.)	Major	Chem	1 Sample daily	1 Sample daily	IS:2629	IS:2629	Galvaniser's QC Records	-	P	V	V	
	Pre-fluxing	a)	Dry fluxing	Major	Chem	100%	100%	IS:2629	IS:2629	Galvaniser's QC Records	-	P	V	V	
		b)	Iron Content	Major	Chem	1 Sample daily	1 Sample daily	IS:2629	IS:2629	Galvaniser's QC Records	-	P	V	V	
		c)	Specific gravity	Major	Chem	1 Sample daily	1 Sample daily	IS:2629	IS:2629	Galvaniser's QC Records	-	P	V	V	
		d)	pH Value	Major	Chem	1 Sample daily	1 Sample daily	IS:2629	IS:2629	Galvaniser's QC Records	-	P	V	V	
		e)	Temperature	Major	Measure	Hourly	Hourly	IS:2629	IS:2629	Galvaniser's QC Records	-	P	V	V	
	Pre-Heating		Temperature	Major	Measure	Hourly	Hourly	IS:2629	IS:2629	Galvaniser's QC Records	√	P	V	V	
	Hot Dip Galvanising	a)	Temperature	Major	Measure	Continuous recording & hourly measurement	Continuous recording & hourly measurement	IS:2629	450 C to 475 C	Galvaniser's QC Records	√	P	V	V	Zinc bath temperature to be recorded continuously on graph & hourly manual recording shall also be done using digital temp. indicator & actual verification by thermometer
		b)	Immersion time	Major	Measure	Each lot	Each lot	IS:2629	IS:2629	Galvaniser's QC Records	√	P	V	V	
		c)	Removal of excessive zinc while lifting from zinc bath by bumping process	Major	Physical	Each item	Each item	IS:2629	IS:2629	Galvaniser's QC Records	√	P	V	V	
	Quenching in Running water		Cooling & cleaning	Major	Physical	Each item	Each item	IS:2629	IS:2629	Galvaniser's QC Records	√	P	V	V	
	Post treatment or Dichromating		Solution Strength	Major	chem	Once in day	Once in day	IS:2629	IS:2629	Galvaniser's QC Records	√	P	V	V	

		T□M : □□T □P □□L□□N□□□□ L□TT□C□ □T□□CT□□□ □□□ □□ □TC□□□□□			N□□C□T□□□ □□□L□T□ PL□N					□P□N□□				□□□□□□ □□ □□	□PP□□□□□ □□
										□e□N□□□□					
					C□N□□□M□N□ T□ C□□□ □ □□ □□□C □NTPC T□C□N□C□L □P□C□□C□T□□N					□□te□					
										□□L□□ □PT□□					
□□N□	COMPONENT & OPERATIONS	CHARACTERISTICS		CLASS	TYPE OF CHECK	QUANTUM OF CHECK		REFERENCE DOCUMENT	ACCEPTANCE NORMS	FORMAT OF RECORD		AGENCY			REMARKS
						6 M	6 C/N					M	C	N	
□	2		3	4	5			7	8	9	D*	**	10		11
□□□□	checks on member after galvanising	a)	Surface defects & finish	Major	Visual	100%	100%	IS:2629	IS:2629	Galvaniser's QC Records	√	P	V	V	
		b)	Thickness of zinc coating	Major	Measure	One Sample/ Shift	One Sample/ Shift	IS:4759 & NTPC Spec & Drg.	IS:4759 & NTPC Spec & Drg.	Galvaniser's QC Records	√	P	V	V	
		c)	Mass of zinc coating	Major	Test	One Sample/ Shift	One Sample/ Shift	IS:6745 & NTPC Spec & Drg.	IS:6745 & NTPC Spec & Drg.	Galvaniser's QC Records	√	P	V	V	
		d)	Uniformity of zinc coating (Preece test)	Major	chem	One Sample/ Shift	One Sample/ Shift	IS:2633	IS:2633	Galvaniser's QC Records	√	P	V	V	
		e)	Adhesion test of zinc coating (Pivoted Hammer Test/ Knife test	Major	Physical	One Sample/ Shift	One Sample/ Shift	IS:2629	IS:2629	Galvaniser's QC Records	√	P	V	V	
□□□□	Stensiling of Mark/ Number	a)	Marking	Major	Visual	100%	100%	Approved Dags	Approved Dags	Galvaniser's QC Records	√	P	V	V	At both ends with black paint
□	□□N□L □N□P□CT□□N														
□□□	Fabricated Menders after Galvanising	a)	Surface finish, Defects & dicromating	Major	Visual	5% Random Sample		IS:2629 IS:4759	IS:2629 IS:4759	Final Insp Report.	-	-	-	-	
		b)	Dimensions	Major	Measure	1% Random sample from each lot offered for inspection on single occasion		IS:802-P-II /Approved Drgs	IS:802-P-II/ Approved Drgs		√	P	W	W	
□□□	Verification of basic material quality	a)	Chemical composition	Major	Chem	1 Random Sample per 40MT or part there of for each class of product		NTPC Appd Drgs	NTPC Appd Drgs	Third Party Lab Report	√	P	V	V	Sample for chemical test to be sent for third party lob or test to be witnessed at vendor works
		b)	Tensile test(TS,YS,%E)	Major	Mech			IS:2062, IS:228 IS:1608, IS:1599	IS:2062, IS:228 IS:1608, IS:1599	Fabricator's QC Report	√	P	W	W	
		c)	Bend Test	Major	Mech						√	P	W	W	

		T M : T P L N L TT C T CT TC			N C T L T PL N C N M N T C NTPC T C N C L P C C T N					P N e N te L PT					PP
N	COMPONENT & OPERATIONS	CHARACTERISTICS		CLASS	TYPE OF CHECK	QUANTUM OF CHECK		REFERENCE DOCUMENT	ACCEPTANCE NORMS	FORMAT OF RECORD		AGENCY			REMARKS
						6 M	6 C/N					M	C	N	
	2		3	4	5			7	8	9	D*	**	10		11
	Fillet Welding Quality		Weld Quality	Major	Visual	100%		IS:822	IS:822	Fabricator's QC Report	√	P	W	W	FOR 3.3, W= RANDOM 10% Butt weld not permitted
	Galvanising	a)	a)Thickness of Zinc Coating	Critical	Measure	1 Random Sample per 40MT or part there of for each class of product		IS:2629 & NTPC Spec.	IS:2629 & NTPC Spec.	Fabricator's QC Report	√	P	W	W	
		b)	Mass of zinc coating	Critical	Measure			IS:6745 & NTPC Spec.	IS:6745 & NTPC Spec.	Fabricator's QC Report	√	P	W	W	
		c)	Uniformity of zinc coating	Critical	Measure			IS:2633	IS:2633	Fabricator's QC Report	√	P	W	W	
		d)	Adhesion test of zinc Coating (Pivoted Hammer/ Knife Test)	Critical	Measure			IS:2629	IS:2629	Fabricator's QC Report	√	P	W	W	
	Review of Documents (TC/TR)	a)	Documents review	Major	Review	As Marked in col 9D		As Applicable	As Applicable	As per QA Plan	-	P	V	V	
	P C N T N N L N N L N		Packing	Major	Review	As Marked in col 9D		IS:2629	Pieces of light sections to be wire bundled & heavy sections to be supplied loose. Stacking to have proper ventilation. Damage to be avoided.	As per QA Plan	-	P	V	V	1. Sequential supplies to be monitored & insured by main contractor. 2. Material rejected by NTPC shall be kept under separate custody marked with paint till all the supplies are despatched to site or destroyed by cutting Presence of NTPC representative.
	P TC		Verification												
		a)	Sequential supplies	Major	Review	100%		Appd Drgs BOM of LOA	Appd Drgs BOM of LOA Packing List	Fabricator's Dispatch	-	P	V	V	
		b)	Stensiling/Part No.												
		c)	Quality												

L N Records, identified with "Tick" (√) shall be essentially included by SUPPLIER in QA documentation.
M MANUFACTURER / SUB-SUPPLIER C: MAIN SUPPLIER, N: NTPC P: PERFORM W: WITNESS AND V: VERIFICATION. AS APPROPRIATE,
C P NTPC SHALL IDENTIFIED IN COLUM "N" AS 'W'.

		T M : T P L N P P T CT			N C T L T PL N					P N					PP
					C N M N T C					e N					
					C NTPC T C N C L P C C T N					te					
										L PT					
N	COMPONENT & OPERATIONS	CHARACTERISTICS		CLASS	TYPE OF CHECK	QUANTUM OF CHECK		REFERENCE DOCUMENT	ACCEPTANCE NORMS	FORMAT OF RECORD		AGENCY			REMARKS
						6 M	6 C/N					M	C	N	
	2		3	4	5			7	8	9	D*	**	10		11
	M teri														
1.01	**tee T e r tr t re**	a)	Chemical Composition	Major	Chemical	1 Sample for 40 MT or Part thereof.		IS:1161	IS:1161	Producer's TC/TR	-	P	V	V	Steel tp procured from NTPC approved Main Steel Producers & NTPC approved sources only.
		b)	Tensile Test (TS YS & %EL)	Major	Mechanical	1 Sample for 40 MT or Part thereof.		IS:1161	IS:1161	Producer's TC/TR	-	P	V	V	
		c)	Flattening Test (above 50NB)	Major	Mechanical	1 Sample for 40 MT or Part thereof.		IS:2328	IS:2328	Producer's TC/TR	-	P	V	-	
		d)	Surface finish & defects	Major	Visual Measure	100%		IS:1161	IS:1161	Producer's TC/TR	-	P	V	-	
		e)	Dimension Length Thickness, OD, Edge preparation	Major	Visual Measure	100%		IS:1161	IS:1161	Producer's TC/TR	-	P	V	-	
1.02	**t ed tr t r tee e ti e d P te**	a)	Chemical Composition	Major	Chemical	1 Sample for 40 MT or Part thereof.		IS:2062 IS:228	IS:2062 IS:228	Producer's TC/TR	-	P	V	V	Steel tp procured from NTPC approved Main Steel Producers as per the tech spec.
		b)	Tensile Test (TS YS & %EL)	Major	Mechanical	1 Sample for 40 MT or Part thereof.		IS:1608	IS:1608	Producer's TC/TR	-	P	V	V	
		c)	Bend Test	Major	Mechanical	1 Sample for 20 MT or Part thereof.		IS:2062 IS:1599	IS:2062 IS:1599	Producer's TC/TR	-	P	V	V	
		d)	Surface Finish & Defects	Major	Visual	100%		IS:2062	IS:2062	GLST TC/TR	-	P	V	-	
		e)	Dimensions	Major	Measure	As per IS:2500 Part I		IS:2062 IS:1852 (For Plates) IS:808 (For Angle)	IS:2062 IS:1852 (For Plates) IS:808 (For Angle)	GLST TC/TR	-	P	V	-	
1.03	**NC**		Chemical Composition	Major	Chemical	One Sample for 200 MT		IS:209	IS:209 ZN-99-95%	GLST TC/TR	-	P	V	V	1.03 Co-relation of Material Test Certificate to be maintained
2.00	**N P C N P CT N**														
2.01	Welding Procedure Specification(WPS)	a)	Suitability	Critical	Review	100%		IS:822 ASME-SEC-IX	IS 802 Part II/ IS 7215/Approved Drawing/Shop Sketches	QW-482	-	P	V	V	WPS to be submitted for approval. If WPS & WQR is already Approved for other Project then the same shall be verified during inspection and shall be applicable for this project.
2.02	Procedure Qualification Record(PQR)	a)	Qualification	Critical	Test	IS:822, ASME-SEC-IX		WPS	WPS	QW-483	-	P	V	V	As above
2.03	Welder Performance Qualification	a)	Qualification	Critical	Test	IS:822, ASME-SEC-IX		WPS	WPS	QW-484	-	P	V	V	As above

		T M : T P L N P P T CT			N C T L T PL N					P N e N te L PT						PP
					C N M N T C N C L P C C T N											
N	COMPONENT & OPERATIONS	CHARACTERISTICS		CLASS	TYPE OF CHECK	QUANTUM OF CHECK		REFERENCE DOCUMENT	ACCEPTANCE NORMS	FORMAT OF RECORD		AGENCY			REMARKS	
						6 M	6 C/N					M	C	N		
	2		3	4	5			7	8	9	D*	**	10		11	
2.04	Fabrication of Base Plate & other items	a)	Centre line hard punching	Major	Visual/Measure	100%		NTPC appd Drgs	NTPC appd Drgs	Inspection Records	-	P	V	-		
		b)	Drilling/Machining/chamfering/deburring	Major	Visual/Measure	100%		NTPC appd Drgs	NTPC appd Drgs	Inspection Records	-	P	V	-		
2.05	Pipe	a)	Centre Line Hand-Punching-Length, edge Preparation	Critical	Visual/Measure	100%		NTPC appd Drgs	NTPC appd Drgs	Inspection Records	-	P	V	-		
2.06	Assembly		Fit up & Tack Welding	Major	Measure	100%		NTPC appd Drgs	NTPC appd Drgs	Inspection Records	-	P	V	-		
2.07	Welding		Sequential Welding	Major	Measure	100%		NTPC appd Drgs	NTPC appd Drgs	Inspection Records	-	P	V	-		
2.08	Inspection Of Weld		Welding defects	Major												
			(a) Visual	Major	Visual	100% of each Type		NTPC appd Drgs	Free from slag & welding defects.	Inspection Records	-	P	V	V		
			(b) Size	Major	Measure	100% of each Type		NTPC appd Drgs	NTPC appd Drgs	Inspection Records	-	P	V	V		
			(c) Competences	Major	Visual	100% of each Type		NTPC appd Drgs	NTPC appd Drgs	Inspection Records	-	P	V	V		
			(d) DPT	Major	NDT	100% of each Type		NTPC appd Drgs	ASTM-E-165	Inspection Records	-	P	V	V		
2.09	Inspection of Welded Pipe Support Structures	a)	Dimensions Hole to Hole, Edge Security	Major	Measure	100%		NTPC appd Drgs	NTPC appd Drgs	Inspection Records	-	P	V	-		
		b)	(b) Straightness	Major	Measure	100%		NTPC appd Drgs	NTPC appd Drgs	Inspection Records	-	P	V	-		
		c)	Parallelirity of flanges	Major	Measure	100%		NTPC appd Drgs	NTPC appd Drgs	Inspection Records	-	P	V	-		
		d)	Perpendicularly of Pipe & base Plate	Major	Measure	100%		NTPC appd Drgs	NTPC appd Drgs	Inspection Records	-	P	V	-		
		e)	Distortion	Major	Measure	100%		NTPC appd Drgs	NTPC appd Drgs	Inspection Records	-	P	V	-		
		f)	Completeness	Major	Measure	100%		NTPC appd Drgs	NTPC appd Drgs	Inspection Records	-	P	V	-		
2.10	Proto Assembly	a)	Fit-up/Notching	Major	Measure	1 No Structure of each type		NTPC Appd Drgs & Shop Sketch	NTPC Appd Drgs & Shop Sketch	Inspection Records	-	P	V	-		
		b)	Dimension	Major	Measure	1 No Structure of each type		NTPC Appd Drgs & Shop Sketch	NTPC Appd Drgs & Shop Sketch	Inspection Records	-	P	V	W		

		T M : T P L N P P T CT			N C T L T PL N					P N e N te L PT					PP
					C N M N T C N C NTPC T C N C L P C C T N										
N	COMPONENT & OPERATIONS	CHARACTERISTICS		CLASS	TYPE OF CHECK	QUANTUM OF CHECK		REFERENCE DOCUMENT	ACCEPTANCE NORMS	FORMAT OF RECORD		AGENCY			REMARKS
						6 M	6 C/N					M	C	N	
	2		3	4	5			7	8	9	D*	**	10		11
3.00	i i														3.00 Galvanising to be done of NTPC Approved Galvaniser only.
3.01	Degreasing	a)	Solution Strength	Major	Chemical	1 Sample per Lot of 100 MT		IS 2629	IS 2629	Manufacturer's Format of Record	-	P	V	V	3.01 Sample test coupons of each section to be attached with the structure & shall not be deattached till the final inspection is over.
		b)	(b) PH Value	Major	Chemical	1 Sample per Lot of 100 MT		IS 2629	IS 2629	Manufacturer's Format of Record	-	P	V	-	
3.02	Rinsing	a)	cleanliness	Major	Visual	100%		IS 2629	IS 2629	Manufacturer's Format of Record	-	P	V	-	
		b)	PH Value	Major	Chemical	1 Sample per Lot of 100 MT		IS 2629	IS 2629	Manufacturer's Format of Record	-	P	V	-	
3.03	Pickling	a)	Acid content	Major	Chemical	1 Sample per Lot of 100 MT		IS 2629	IS 2629	Manufacturer's Format of Record	-	P	V	V	
		b)	Iron Content	Major	Chemical	1 Sample per Lot of 100 MT		IS 2629	IS 2629	Manufacturer's Format of Record	-	P	V	-	
3.04	Rinsing	a)	cleanliness Mill scale	Major	visual	1 Sample per Lot of 100 MT		IS 2629	IS 2629	Manufacturer's Format of Record	-	P	V	-	
		b)	PH Value	Major	Chem	Daily		IS 2629	IS 2629	Manufacturer's Format of Record	-	P	V	-	
3.05	Fluxing	a)	Specific gravity	Major	Physical	Daily		IS 2629	IS 2629	Manufacturer's Format of Record	-	P	V	V	
		b)	PH Value	Major	Chemical	Daily		IS 2629	IS 2629	Manufacturer's Format of Record	-	P	V	-	
3.06	Pre-Heating	c)	Temperature	Major	measure	Hourly		IS 2629	IS 2629	Manufacturer's Format of Record	-	P	V	-	
3.07	Hot-Dip Galvanising	a)	Temperature	Major	measure	Hourly		IS 2629	IS 2629	Manufacturer's Format of Record	-	P	V	V	3.07 Calibrated Instrument to be used
		b)	Removal of execevie Zinc While lifting from zinc bath	Major	Physical	Each item		IS 2629	IS 2629	Manufacturer's Format of Record	-	P	V	V	
3.08	Quenching in Running Water		Cooling & Cleaning	Major	Physical	Each Item		IS:2629	IS:2629	Galvaniser's QC Records	-	P	-	-	
3.09	Post Treatment or Dichromating	a)	Solution Strength	Major	Physical	Each Item		IS:2629	IS:2629	Galvaniser's QC Records	-	P	V	V	

		T M : T P L N P P T CT			N C T L T PL N					P N e N te L PT					PP	
					C N M N T C N C NTPC T C N C L P C C T N											
N	COMPONENT & OPERATIONS	CHARACTERISTICS		CLASS	TYPE OF CHECK	QUANTUM OF CHECK		REFERENCE DOCUMENT	ACCEPTANCE NORMS	FORMAT OF RECORD		AGENCY			REMARKS	
						6 M	6 C/N					M	C	N		
	2		3	4	5			7	8	9	D*	**	10		11	
3.10	Check on structures after Galvanising	a)	Surface defects & Finish	Major	Chem	Once in a day		Is:4759 & IS:2629	Is:4759 & IS:2629	Galvaniser's QC Records	-	P	V	V		
		b)	Survey of Thickness of Zinc Coating by Elecometer	Major	Measure	100%		Is:4759 & IS:2629	Is:4759 & IS:2629	Galvaniser's QC Records	-	P	V	V		
		c)	Thickness of Zinc Coating	Major	Measure	3 Sample/Lot		Is:4759 & IS:2629	Is:4759 & IS:2629	Galvaniser's QC Records	-	P	V	V		
		d)	Mass of Zinc Coating	Major	Chem	3 Sample/Lot		IS:6745	NTPC Spec.	Galvaniser's QC Records	-	P	V	V		
		e)	Uniformity of Zinc Coating	Major	Chem	3 Sample/Lot		IS:2633	IS:2633	Galvaniser's QC Records	-	P	V	V		
		f)	Adhesion Test of Zinc coating(Pivoted Hammer Test/Knife Test)	Major	Physical	3 Sample/Shift		IS:2629	IS:2629	Galvaniser's QC Records	-	P	V	V		
	Finishing		Removal of excessive zinc													
3.11	Stensiling of Mark No/Part number		Marking	Major	Visual	100%		NTPC Appd Drgs.	NTPC Appd Drgs.	Galvaniser's QC Records	-	P	V	V		
	N L N P CT N															
4.01	Galvanised steel Pipe support Structure	a)	Surface Finish, defects & dichronating	Critical	Visual	100%		IS:2629 & IS:4759	IS:2629 & IS:4759	Inspection report	-	P	W	W	(a) Galvanising tests to be carried out on randomly selected samples from the tried up test coupons	
		b)	dimensions	Critical	Measure	100%		IS:802-P-II & NTPC Appd Drg.	IS:802-P-II & NTPC Appd Drg.	Inspection report	-	P	W	W	(b) Butt Weld not permitted	
		c)	Straightness	Critical	Measure	100%		IS:802-P-II & NTPC Appd Drg.	IS:802-P-II & NTPC Appd Drg.	Inspection report	-	P	W	W	c) For 4.01, witness shall be 10% on random basis	
		d)	Parallelity of Flange	Critical	Measure	100%		IS:802-P-II & NTPC Appd Drg.	IS:802-P-II & NTPC Appd Drg.	Inspection report	-	P	W	W		
		e)	Perpendicularity of Pipe & base Plate	Critical	Measure	100%		IS:802-P-II & NTPC Appd Drg.	IS:802-P-II & NTPC Appd Drg.	Inspection report	-	P	W	W		
		f)	Distortion	Critical	Measure	100%		IS:802-P-II & NTPC Appd Drg.	IS:802-P-II & NTPC Appd Drg.	Inspection report	-	P	W	W		
		g)	Completeness	Critical	Visual	100%		IS:802-P-II & NTPC Appd Drg.	IS:802-P-II & NTPC Appd Drg.	Inspection report	-	-	-	-		
		h)	Stenciling of Part no.	Major	Visual	100%		Part Drg.	Part Drg.	Inspection report	-	P	W	W		

		T M : T P L N P P T CT			N C T L T PL N					P N e N te L PT					PP	
		C N M N T C N C L P C C T N														
N	COMPONENT & OPERATIONS	CHARACTERISTICS		CLASS	TYPE OF CHECK	QUANTUM OF CHECK		REFERENCE DOCUMENT	ACCEPTANCE NORMS	FORMAT OF RECORD		AGENCY			REMARKS
						6 M	6 C/N					M	C	N	
	2		3	4	5			7	8	9	D*	**	10		11
4.02	Fillet Welding Quality		Weld Quality	Critical	Visual	10%		IS:822	Is:822	Inspection report	-	P	W	W	
4.03	Galvanising Test	a)	Thickness of Zinc Coating	Critical	Measure	Random Sample from Each Lot		IS:2629 & IS:4759	IS:2629 & IS:4759	Inspection report	-	P	W	W	
		b)	Mass of Zinc Coating	Critical	Chem	Random Sample from Each Lot		IS:6745	NTPC Spec.	Inspection report	-	P	W	W	
		c)	Uniformity of Zinc Coating (Preece Test)	Critical	Chem	Random Sample from Each Lot		IS:2633	IS:2633	Inspection report	-	P	W	W	
		d)	Adhesion Test of Zinc coating (Pivoted Hammer Test/Knife test)	Critical	Physical	Random Sample from Each Lot		IS:2629	IS:2629	Inspection report	-	P	W	W	
4.04	Review of Documents	a)	Compliance of previous stage	Major	Review	As applicable		As applicable	As applicable	As applicable					CHP
		b)	Sequential Supplies	Major	Review	As applicable		I.O.A	I.O.A	As applicable	-	P	V	V	4.04 Sequential Supplies to be mentioned as per contract & ensured by Main Contractor
4.05	Packing		Packing	Major	Review	100%		Packing List	Packing List	As applicable	-	P	V	V	5.00 Material rejected by NTPC shall be kept under separated custody duly marked with paint till al the supplies are despatch to site or destroyed by cutting in presence of Nap representative
5	Despatch		Verification of Quantity	Major	Packing	100%		BOM & LOA	BOM & LOA	Despatch Record					

L N Records, identified with "Tick" (√) shall be essentially included by SUPPLIER in QA documentation.
M MANUFACTURER / SUB-SUPPLIER C: MAIN SUPPLIER, N: NTPC P: PERFORM W: WITNESS AND V: VERIFICATION. AS APPROPRIATE,
C P NTPC SHALL IDENTIFIED IN COLUM "N" AS 'W'.

SQE _10

4) LT SWITCHGEAR & LT BUSDUCT

(MCC, PCC, ACDB, DCDB, FUSE BOARDS, LOCAL PUSH BUTTON STATION, LOCAL MOTOR STARTERS)

ATTRIBUTES / CHARACTERIS-TICS → ↓ ITEMS/ COMPONENTS/ SUB SYSTEM ASSEMBLIY	Make, Model, Type, Rating & TC	Dimensions & Finish	Electrical properties	Mechanical Properties	Chemical properties	Functional & Operational Features as per NTPC Spec.	Item to conform to relevant Standards	Pretreatment as per IS 6005	Paint Shade, Adhesion, Thickness & Finish	Functional Checks	Milli-volt drop Test	IR – HV – IR Test	Degree of Protection Routine test as per NTPC spec	All Routine tests as per NTPC spec. & IS
Sheet Steel (IS : 513)	Y	Y		Y	Y		Y							
Aluminum Bus bar Material (IS : 5082)	Y	Y	Y	Y	Y		Y							
Copper Bus bar Material (IS : 613)	Y	Y	Y	Y	Y		Y							
Support Insulator	Y	Y	Y	Y			Y							
Air Circuit Breaker (IS: 13947)	Y	Y				Y	Y			Y	Y			Y
Energy Meters (IS : 13010, 13779)	Y	Y				Y	Y			Y				Y
Power & Aux. Contactors (IS : 13947)	Y	Y				Y	Y			Y				
Protection & Aux. Relays	Y	Y				Y	Y			Y				Y

(IS : 3231) (IEC 60255 / IEC 61850)														
Control & Selector Switches (IS : 13947)	Y	Y				Y	Y			Y				
CT's & PT's (IS 2705 / 3156)	Y	Y					Y							Y
MCCB (IS : 13947)	Y	Y					Y			Y				
Indicating Meters (IS : 1248)	Y	Y				Y	Y			Y				Y
Indicating Lamps (IS : 13947)	Y	Y				Y	Y			Y				
Air Break Switches (IS : 13947)	Y	Y				Y	Y			Y				
Control Terminal Blocks	Y	Y				Y	Y							

LT SWITCHGEAR

(MCC, PCC, ACDB, DCDB, FUSE BOARDS, LOCAL PUSH BUTTON STATION, LOCAL MOTOR STARTERS)

ATTRIBUTES / CHARACTERIS-TICS → ↓ **ITEMS/ COMPONENTS/ SUB SYSTEM ASSEMBLIY**	Make, Model, Type, Rating & TC	Dimensions & Finish	Electrical properties	Mechanical Properties	Chemical properties	Functional & Operational Features as per NTPC Spec.	Item to conform to relevant Standards	Pretreatment as per IS 6005	Paint Shade, Adhesion, Thickness &	Functional Checks	Milli-volt drop Test	IR – HV – IR Test	Degree of Protection Routine test as per NTPC spec	All Routine tests as per NTPC spec. & IS
Fuse (IS 13703)	Y	Y				Y	Y							
Control Transformer (IS : 12021)	Y	Y				Y	Y			Y				Y
Push Buttons (IS : 4794)	Y	Y				Y	Y			Y				
Transducer (IEC : 60688)	Y	Y				Y	Y			Y				Y
MCB (IS : 8828)	Y	Y				Y	Y			Y				
Breaker Handling Trolley	Y	Y				Y			Y	Y				Y
Synthetic Rubber Gasket (IS : 11149)	Y	Y		Y	Y		Y							

LT SWITCHGEAR (IS : 8623)	Y	Y				Y	Y	Y	Y	Y		Y	Y	Y

Notes:

1. This is an indicative list of tests / checks. The manufacturer is to furnish a detailed Quality Plan indicating the practice and procedure along with relevant supporting documents.
2. Makes of all major Bought Out Items will be subject to NTPC approval.

5) CABLING, EARTHING, LIGHTNING PROTECTION

MODULE NO. SQE-16

ATTRIBUTES / CHARACTERISTICS ITEMS/COMPONENTS / SUB SYSTEMS	Dimension	Paint shade, paint thickness, adhesion	Pre-treatment of sheet	IP protection	Proof load*	Surface finish	Deflection test*	HV & IR	Galvanise Test (If Applicable)	Functional	Bought out items/Bill of material	Routine tests as per relevant standard & specification	Acceptance tests as per relevant standard & specification	Constructional feature as per NTPC Specification
Wall Mounted-Lighting Panel (IS-513, IS:5, IS:2629, 2633, 6745)	Y	Y	Y	Y		Y		Y		Y	Y	Y	Y	Y
Switch box/junction box/ Receptacles Panel (IS-513, IS:5, IS:2629, 2633, 6745)	Y	Y	Y	Y		Y		Y	Y	Y	Y	Y	Y	Y
Cable glands(BS-6121)	Y													Y
Cable lug	Y													Y
Lighting wire (IS-694)	Y											Y		
Flexible conduits	Y											Y		Y
Conduits (Galvanise & Epoxy) IS-9537 & IS-2629, 2633, 6745	Y		Y						Y			Y		Y
RCC Hume Pipe (IS-458)												Y		
Cable termination & straight through joint (IS 13573)	Y											Y		Y
Cable Trays, bends, tees, crosses, Flexible supports system & accessories IS-513, 2629,2633,6745	Y		Y		Y	Y	Y		Y			Y	Y	Y

Trefoil clamp	Y													Y
GI flats for earthing & lighting protection (IS 2062, 2629, 6745,2633)	Y		Y						Y			Y		Y
GI wire (IS-280)	Y											Y		
Fire Sealing System (BS –476)												Y	Y	Y

.Note:1.This is an indicative list of tests /checks. The manufacturer is to furnish a detailed Quality Plan indicating the practice and procedure along with relevant supporting documents.

2.* Deflection Test on cable trays and Proof Load test on cable trays support system will be as per details given in the NTPC technical specification & approved MQP. The above acceptance tests shall be done only on one sample from each size of offered lot. This test is not applicable on bends, tees & crosses.

3. Make of all items will be subject to NTPC approval.

6) Control Cables

Attributes / Characteristics / Item / Components / Sub System Assembly	Make, Type & T.C as per relevant standard	Dimension/surface finish	Mechanical properties	Chemical Composition	Spark Test(as applicable)	Electrical properties	Lay length & Sequence	Armour coverage, cross over, looseness, gap between two wires	Sequential marking/ Batch marking/ surface finish/ cable length	T.S & elongation before & after ageing on outer sheath & insulation	Thermal stability	Anti termite coating on wooden drums	Constructional requirements feature as per NTPC specification	Routine & Acceptance Tests as per relevant standard & NTPC specification	FRLS Tests
Copper (IS-8130)	Y	Y	Y	Y		Y									
PVC insulation Compound (IS: 5831)	Y		Y			Y				Y	Y				
FRLS PVC Compound (IS-5831, ASTM-D2843, IS10810(Part 58), IEC-60754 Part-1)	Y		Y							Y	Y				Y
Extrusion & curing /Manufacturing of Core		Y			Y						Y				
Core Laying							Y								
Armour wire/strip	Y	Y	Y												
Inner sheath	Y	Y													
Armouring		Y						Y							
Outer Sheathing		Y							Y						
Finished Cable (IS-5831, ASTM-D2843, IS10810 (Part 58), IEC-60754 Part-1, IEC 60332 part III cat B)							Y	Y	Y	Y	Y		Y	Y	Y
Wooden drum(IS-10418) /Steel Drum		Y										Y	Y		

Notes:

1. This is an indicative list of tests / checks. The manufacturer is to furnish a detailed Quality Plan indicating the practice and procedure along with relevant supporting documents.
2. Make of all major Bought out items will be subject to NTPC approval.

ROUTINE TESTS		**Following routine tests shall be carried out on each drum of finished cables for all sizes.**
1)		Conductor Resistance test
2)		High voltage test
ACCEPTANCE TESTS		**Following Acceptance tests shall be carried out on each size of cables, in the offered lot.**
A) For Conductor (as per sampling plan mentioned in IS: 1554)		
	1)	Annealing test (Copper)
	2)	Resistance test
B) For Armour Wires / Formed Wires (If applicable) (as per sampling plan mentioned in IS: 1554)		
	1.	Measurement of Dimensions
	2.	Tensile Tests
	3.	Elongation Test
	4.	Torsion Test For Round wires only
	5.	Wrapping Test
	6.	Resistance Test
	7.	Mass of Zinc coating test For G S wires / Formed wires only
	8.	Uniformity of Zinc coating For G S wires / Formed wires only
	9.	Adhesion test For G S wires / Formed wires only
	10.	Freedom from surface defects
C) For PVC insulation & PVC Sheath (as per sampling plan mentioned in IS: 1554)		
	1)	Test for thickness
	2)	Tensile strength & Elongation before ageing (for tests after ageing see “D”)

D) Ageing test:

	Criteria	Condition	Test Requirements	Remarks
PVC insulation & outer sheath:	Samples as per relevant IS, from each size of cables in the offered lot, shall be tested for tensile strength & elongation (before ageing). **Tensile & elongation testing shall preferably be done with a computerized machine.** The values will be compared with corresponding values mentioned in the Type Test report accepted by NTPC. These values of Tensile Strength & Elongation (before ageing) should be within +/ - 15% of the corresponding values of Type Test report. (Please note that test values should be more than the minimum values indicated in relevant standard).	All sizes which meet the criteria	The size which has maximum negative deviation from type test report values will be put on accelerated ageing test. The samples shall be aged in air oven at temperature of 130ºc+/- 2ºc for 5 hours and tested for TS & elongation. Acceptance norms shall be as per IS.	In case the size does not meet the requirement in accelerated ageing test **then all sizes (which had met the criteria) will be put on ageing test as per IS.**
		Sizes which do not meet the criteria	Every size will be put on ageing test as per IS.	----

E) Following tests will be carried out on completed cables as per IS on each size:

1) Insulation resistance test (Volume resistivity method)
2) High voltage test

F) Following tests shall be carried out on only one size of offered lot (comprising of all sizes):

1) Thermal stability test on PVC insulation and outer sheath
2) Oxygen index test on outer sheath
3) Smoke density rating test on outer sheath
4) Acid gas generation test on outer sheath

G) Flammability test as per IEC 60332 - Part- 3 (Category- B) on completed cable will be carried out as per following sampling plan:

This test will be carried out using composite sampling i.e. irrespective of size; cables of one particular type (i.e. armoured, unarmoured) will be bunched together, as per calculations in line with the IEC. All sizes of armoured & unarmoured cables shall be covered.

H) Following tests shall be carried on one length of each size (armoured & unarmoured) of offered lot:

1) Constructional / dimensional check, surface finish, length measurement, sequence of cores, armour coverage, Gap between two consecutive armour wires / formed wires, Sequential marking, drum / outer sheath extrusion's batch number marking
2) Measurement of Eccentricity & Ovality

7) LT Power Cables

Attributes / Characteristics Item / Components / Sub System Assembly	Make, Type & T.C as er relevant standard	Dimension/surface finish	Mechanical properties	Chemical Composition	Spark Test(as applicable)	Electrical properties	Hot Set Test/ Eccentricity & Ovality	Lay length & Sequence	Armour coverage, cross over, looseness, gap between two wires	Sequential marking/ Batch marking/ surface finish/ cable length	T.S & elongation before & after ageing on outer sheath &	Thermal stability	Anti termite coating on wooden drums	Constructional requirements feature as per NTPC specification	Routine & Acceptance Tests as per relevant standard & NTPC specification	FRLS Tests
Aluminum (IS-8130)	Y	Y	Y	Y		Y										
XLPE Compound (IS-7098)	Y		Y			Y	Y				Y					
PVC insulation Compound (IS: 5831)	Y		Y			Y					Y	Y				
FRLS PVC Compound (IS-5831, ASTM-D2843, IS10810(Part 58), IEC-60754 Part-1)	Y		Y								Y	Y				Y
Extrusion & curing /Manufacturing of Core (PVC / XLPE)		Y			Y		Y					Y				
Core Laying								Y								
Armour wire/strip	Y	Y	Y													
Inner sheath	Y	Y														
Armouring		Y							Y							
Outer Sheathing		Y								Y						
Power Cable (Finished) (IS-5831, ASTM-D2843, IS10810(Part 58), IEC-60754 Part-1, IEC 60332 part III cat B)								Y	Y	Y	Y	Y		Y	Y	Y
Wooden drum(IS-10418) /Steel Drum		Y											Y	Y		

Notes:
1. This is an indicative list of tests / checks. The manufacturer is to furnish a detailed Quality Plan indicating the practice and procedure along with relevant supporting documents.
2. Make of all major Bought out items will be subject to NTPC approval.

ROUTINE TESTS	**Following routine tests shall be carried out on each drum of finished cables for all types (PVC / XLPE insulated) & sizes.**	
3)	Conductor Resistance test	
4)	High voltage test	
ACCEPTANCE TESTS	**Following Acceptance tests shall be carried out on each size of each type (PVC / XLPE insulated) of cables, in the offered lot.**	
A) For Conductor (as per sampling plan mentioned in IS: 1554 / 7098)		
	1)	Annealing test (Copper)
	2)	Tensile Test (Aluminum)
	3)	Wrapping Test (Aluminum)
	4)	Resistance test
B) For Armour Wires / Formed Wires (If applicable) (as per sampling plan mentioned in IS: 1554 / 7098)		
	1.	Measurement of Dimensions
	2.	Tensile Tests
	3.	Elongation Test
	4.	Torsion Test For Round wires only
	5.	Wrapping Test
	6.	Resistance Test
	7.	Mass of Zinc coating test For G S wires / Formed wires only
	8.	Uniformity of Zinc coating For G S wires / Formed wires only
	9.	Adhesion test For G S wires / Formed wires only
	10.	Freedom from surface defects
C) For PVC / XLPE insulation & PVC Sheath (as per sampling plan mentioned in IS: 1554 / 7098)		
	1)	Test for thickness
	2)	Tensile strength & Elongation before ageing (for tests after ageing see "D")
	3)	Hot set test (For XLPE insulation)

D) Ageing test:

	Criteria	Condition	Test Requirements	Remarks
PVC insulation & outer sheath:	Samples as per relevant IS, from each size of cables in the offered lot, shall be tested for tensile strength & elongation (before ageing). **Tensile & elongation testing shall preferably be done with a computerized machine.**	All sizes which meet the criteria	The size which has maximum negative deviation from type test report values will be put on accelerated ageing test. The samples shall be aged in air oven at temperature of 130ºc+/-2ºc for 5 hours and tested for TS & elongation. Acceptance norms shall be as per IS.	In case the size does not meet the requirement in accelerated ageing test **then all sizes (which had met**

	The values will be compared with corresponding values mentioned in the Type Test report accepted by NTPC. These values of Tensile Strength & Elongation (before ageing) should be within +/ - 15% of the corresponding values of Type Test report. (Please note that test values should be more than the minimum values indicated in relevant standard).			**the criteria) will be put on ageing test as per IS.**
		Sizes which do not meet the criteria	Every size will be put on ageing test as per IS.	----
XLPE insulation	Samples as per relevant IS, from each size of cables in the offered lot,will be put on ageing test as per IS.			
E) Following tests will be carried out on completed cables as per IS on each size of each type (PVC / XLPE insulated)				
	1)	Insulation resistance test (Volume resistivity method)		
	2)	High voltage test		
F) Following tests shall be carried out on only one size of offered lot (comprising of all sizes & types)				
	1)	Thermal stability test on PVC insulation and outer sheath		
	2)	Oxygen index test on outer sheath		
	3)	Smoke density rating test on outer sheath		
	4)	Acid gas generation test on outer sheath		
G) Flammability test as per IEC 60332 - Part- 3 (Category- B) on completed cables as per following sampling plan:				
		This test will be carried out using composite sampling i.e. irrespective of size; cables of one particular type (i.e. armoured PVC insulated, unarmoured PVC insulated, armoured XLPE insulated, unarmoured XLPE insulated) will be bunched together, as per calculations in line with the IEC. All sizes of PVC & XLPE insulated, armoured & unarmoured cables shall be covered. For one particular type, cables with OD less than or equal to 30 mm shall be clubbed together in touching formation while cables with OD greater than 30 mm shall be clubbed together leaving a gap equal to OD of cable having least diameter. Cable OD shall be taken as nominal overall diameter as per NTPC approved datasheet.		
H) Following tests shall be carried on one length of each size of each type (PVC / XLPE insulated) of offered lot:				
	1)	Constructional / dimensional check, surface finish, length measurement, sequence of cores, armour coverage, Gap between two consecutive armour wires / formed wires, Sequential marking, drum / Batch (outer sheath extrusion batch)number marking on sheath		
	2)	Measurement of Eccentricity & Ovality		

8) MV (3.3 kV / 6.6. kV / 11 kV / 33 kV) Cables

Attributes / Characteristics Item / Components / Sub System Assembly	Make, Type & T.C as per relevant standard	Dimension/surface finish	Mechanical properties	Chemical Composition	Spark Test(as applicable)	Electrical properties	Hot Set Test/ Eccentricity & Ovality	Lay length & Sequence	Armour coverage, cross over, looseness, gap between two wires	Sequential marking/ Batch marking/ surface finish/ cable length	T.S & elongation before & after geing on outer sheath &	Thermal stability on outer sheath	Metallic (Cu) Screening If applicable)	Anti termite coating on wooden drums	Constructional requirements feature as per NTPC specification	Routine & Acceptance Test as per relevant standard & NTPC specification	FRLS Test
Aluminum (IS-8130)	Y	Y	Y	Y		Y											
Semiconducting Compound	Y		Y			Y											
XLPE Compound (IS-7098 Part-II)	Y		Y			Y					Y						
FRLS PVC Compound (IS-5831, ASTM-D2843, IS10810(Part 58) ,IEC-60754 Part-1)	Y		Y								Y	Y					Y
Triple Extrusion & curing /Manufacturing of Core		Y			Y		Y										
Copper Tape	Y	Y	Y			Y											
Polyster tape	Y	Y															
Core Laying								Y									
Armour wire/strip	Y	Y	Y														
Copper tapping	Y	Y											Y				
Inner sheath	Y	Y															
Armouring		Y							Y								
Outer Sheathing		Y								Y							
Power Cable (Finished)								Y	Y	Y	Y	Y			Y	Y	Y
Wooden drum(IS-10418) /Steel Drum		Y												Y	Y		

Notes:

1. This is an indicative list of tests / checks. The manufacturer is to furnish a detailed Quality Plan indicating the practice and procedure along with relevant supporting documents.
2. Make of all major Bought out items will be subject to NTPC approval.

ROUTINE TESTS	**Following routine tests shall be carried out on each drum of finished cables for all types & sizes.**	
5)	Conductor Resistance test	
6)	High voltage test	
7)	Partial discharge test **(for Screened cables only)**	
ACCEPTANCE TESTS	**Following Acceptance tests shall be carried out on each size of each type (voltage rating) of cables, in the offered lot.**	
A) For Conductor (as per sampling plan mentioned in IS: 7098 Part II)		
	3)	Annealing test (Copper)
	4)	Tensile Test (Aluminum)
	5)	Wrapping Test (Aluminum)
	6)	Resistance test
B) For copper tape / Wires (as per sampling plan mentioned in IS: 7098 Part II)		
	1)	Measurement of Dimensions
	2)	Conductivity check
B) For Armour Wires / Formed Wires (If applicable) (as per sampling plan mentioned in IS: 7098 Part II)		
	11.	Measurement of Dimensions
	12.	Tensile Tests
	13.	Elongation Test
	14.	Torsion Test For Round wires only
	15.	Wrapping Test
	16.	Resistance Test
	17.	Mass of Zinc coating test For G S wires / Formed wires only
	18.	Uniformity of Zinc coating For G S wires / Formed wires only
	19.	Adhesion test For G S wires / Formed wires only
	20.	Freedom from surface defects
C) For XLPE insulation & PVC Sheath (as per sampling plan mentioned in IS: 7098 Part II)		
	3)	Test for thickness
	4)	Tensile strength & Elongation before ageing (for tests after ageing see “D”)
	5)	Hot set test (For XLPE insulation)

D) Ageing test:

	Criteria	Condition	Test Requirements	Remarks
PVC outer sheath :	Samples as per relevant IS, from each size of each type (voltage rating) of cables in the offered lot, shall be tested for tensile strength & elongation (before ageing). **Tensile & elongation testing shall preferably be done with a computerized machine.** The values will be compared with corresponding values mentioned in the Type Test report accepted by NTPC. These values of Tensile Strength & Elongation (before ageing) should be within +/ - 15% of the corresponding values of Type Test report. (Please note that test values should be more than the minimum values indicated in relevant standard).	All sizes which meet the criteria	For PVC: The size which has maximum negative deviation from type test report values will be put on accelerated ageing test. The samples shall be aged in air oven at temperature of 130°c+/- 2°c for 5 hours and tested for TS & elongation. Acceptance norms shall be as per IS.	In case the size does not meet the requirement in accelerated ageing test **then all sizes (which had met the criteria) will be put on ageing test as per IS.**
		Sizes which do not meet the criteria	Every size will be put on ageing test as per IS.	----
XLPE Insulation	Samples as per relevant IS, from each size of each type (voltage rating) of cables in the offered lot, will be put on ageing test as per IS.			

E) Following tests will be carried out on completed cables as per IS on each size of each type

1) Insulation resistance test (Volume resistivity method)
2) High voltage test
3) Partial discharge test (for Screened cables only)

F) Following tests shall be carried out on only one size of offered lot (comprising of all sizes & types)

1) Thermal stability test on outer sheath
2) Oxygen index test on outer sheath
3) Smoke density rating test on outer sheath
4) Acid gas generation test on outer sheath
5) Flammability test as per IEC 60332 - Part- 3 (Category- B) on completed cable

G) Following tests shall be carried on one length of each size of each type of offered lot:

1) Constructional / dimensional check, surface finish, length measurement, sequence of cores, armour coverage, Gap between two consecutive armour wires / formed wires, Sequential marking, marking of drum no. / Batch number of outer sheath extrusion
2) Measurement of Eccentricity & Ovality

INSTRUMENTATION CABLE

TESTS → / ITEMS ↓	Conductor Resistance ® & (A)	High Voltage ® & (A)	Insulation Resistance ® & (A)	Constructional detail, dimensions (A)	Outer-Sheathe/core marking, end sealing (A)	Thermal Stability (A) +	Visual, Surface finish (A) +	Electrical Parameters ** (A) +	Persulphate Test (A) +	Overall/Coverage/Continuity (A)	Swidesh chimney Test (SS-4241475) (A) ++	FRLS Test * (A) ++	Tensile & Elongation before & after aging (A) ++	Vol. Resistivity. at room & Elevated Temp. (A) ++	Spark test report review ®
1. Instrument cable twisted and shielded															
Conductor(IS-8130)	Y			Y			Y								
Insulation(VDE-207)				Y	Y	Y	Y						Y		Y
Pairing/Twisting				Y	Y		Y								
Shielding				Y			Y			Y					
Drain wire	Y			Y			Y		Y	Y					
Inner Sheath				Y	Y	Y	Y					Y	Y		
Outer Sheath				Y	Y	Y	Y					Y	Y		
Over all cable	Y	Y	Y	Y	Y		Y	Y			Y			Y	
Cable Drums(IS-10418)				Y			Y								

Note : High Temp. cables shall be subjected to tests as per VDE-207(Part-6)
Compensating cables shall be checked for Thermal EMF/Endurance test as per IS 8784.
Note : This is an indicative list of tests/checks. The manufacture is to furnish a detailed Quality Plan indicating his practice & Procedure along with relevant supporting documents during QP finalization for all items.
Note : ® - Routine Test A - Acceptance Test Y - Test Applicable
Note : Sampling Plan for Acceptance test shall be as per IS 8784 (As applicable)

- * FRLS Tests: Oxygen / Temp Index (ASTM D-2863), Smoke Density Rating (ASTM – D 2843), HCL Emission (IEC-754-1)
- ** Characterisitic Impedence, Attenuation, Mutual Capacitance, Cross Talk (As applicable)

\+ Sample size will be One No. of each size/type per lot.
++ Sample size will be One No. sample for complete lot offered irrespective of size/type.

POWER SUPPLY FOR C&I SYSTEMS (UPS/BATTERY/BATTERY CHARGER/ACDB/DCDB)

ITEMS \ TESTS	Visual/dimension/rating/ Paint Adhesion/ Thickness (R)	General arrangement/BOM/make of components /Mimic ®	Efficiency ,regulation(R)	Input voltage variation (A)	Out put voltage and frequency adj.range(A)	Premilinary light load test(R)	Load transfer retransfer test (R) *	AC input faiure and return test (R)	Parralel operation and current divison(R)	Relative harmonic content(R)	Restart with PRI A.C and battery (separately)(R)	System transfer and retransfer (R)*	Asynchronous transfer(R)	Ripple content(R)	Load limiter operation (R)	IR/HV(R)	Tests as per standard &specification (R)&(A)
UPS/CONVERTER (IEC-146 PT-4)	Y	Y	Y	Y	Y	Y	Y	Y	Y	Y	Y	Y	Y	Y	Y	Y	Y
VOLTAGE STABILISER	Y	Y	Y	Y	Y					Y		Y				Y	
LEAD ACID BATTERY(TUBLAR)-IS-1651																	Y
LEAD ACID BATTERY (PLANTE)-IS-1652																	Y
NICKEL CADMIUM BATTERY(IS-10918/IEC-623)																	Y
SMF BATTERY																	Y
ACDB/DCDB	Y	Y														Y	Y
BATTERY CHARGER	Y	Y	Y	Y	Y				Y					Y	Y	Y	Y

R-Routine Test A- Acceptance Test Y – Test applicable

* Transfer time and Over shoot /under shoot during load & system transfer shall be recorded .

Note:
1) Detailed procedure of Environmental Stress Screening test shall be as per Quality Assurance Programme in General Technical Conditions
2) This is an indicative list of tests/checks. The manufacturer is to furnish a detailed quality plan indicating the Practices and Procedure adopted alongwith relevant supporting documents.

12) STATION LIGHTING SQE_17

Item Components Sub System Assembly / Attributes Characteristic	Make, Type , Rating/ TC	Dimension	Pre-Treatment of sheat	Paint Shade Thickness Adhesion & Finish	Galvanization Tests	IP Test	Bought Out Items/ Bill of Material	HV & IR	Functional Check as per spec.	Constructional Feature as per NTP spec	Routine Test as per relevant std and spec	Acceptance Test as per relevant std and spec	Item to conform to relevant standard
Luminaries (IS-10322 Part-5 Sec.1 (non – LED type)	Y					Y		Y			Y	Y	Y
Electronic Ballast	Y										Y	Y	Y
Lighting Wire (IS-694)	Y										Y		
Fans (IS-374)	Y										Y		
Pole (IS-2713)	Y			Y						Y	Y	Y	
Lamps (IS-9800, IS-9974)	Y										Y	Y	
Lighting Mast (with raise & lower lantern type)	Y	Y			Y					Y	Y	Y	
Wall Mounted Lighting Panel (IS-513, IS-5)	Y	Y	Y	Y	Y	Y	Y	Y	Y	Y	Y	Y	

Switch Box/ Junction Box/Receptacles/ Local Push Button Station / Lighting Panel (IS-513, 2629, 2633, 4759, 6745)	Y	Y	Y	Y	Y	Y	Y	Y	Y	Y	Y	Y	
Cable Gland (BS-6121)	Y	Y									Y		
Cable Lug (IS-8309)	Y	Y									Y		
Flexible Conduit	Y										Y		
Lighting Transformer (IS-11171)	Y									Y	Y		
Epoxy & Galvanised Conduit (IS-9537, 2629, 2633, 4759, 6745)	Y	Y									Y		Y

13) LED Luminaire Quality Requirements

1) **LED modules to conform to IS: 16103 part 2. Manufacturer to issue a certificate of compliance for the same.**
2) **Control gear to conform to IS 15885 part 2 section 13. Manufacturer to issue a certificate of compliance for the same.**
3) **LED luminaire to conform to IS 16107 part 2 section 1. Manufacturer to issue a certificate of compliance for the same.**
4) **LED luminaire marking to be as per IS 16107 part 2 section 1. Manufacturer to issue a certificate of compliance for the same.**
5) **Acceptance tests as per IS 16107 part 2 section 1 to be carried out on LED luminaire except long duration tests i.e. a) Chromaticity coordinates & correlated color temperature (CCT); b) Color rendering index (CRI). Manufacturer will submit a COC for above tests i.e. CCT & CRI**
6) **LED driver make, model, type & rating may be as per recommendations of LED module manufacturer**.

Notes:

1. This is an indicative list of tests / checks. The manufacturer is to furnish a detailed Quality Plan indicating the practice and procedure along with relevant supporting documents.
2. Make of all major Bought Out Items will be subject to NTPC approval

15) SWITCHYARD

Attributes / Characteristics / Items/Components Sub Systems	Make, model, Type & Rating, Test Certificate	Routine & Acceptance Test as per IS / IEC	Functional requirements as per NTPC Specification
Circuit Breaker (IEC:62271-100)	Y	Y	Y
Hollow insulator (IEC:233/ IS:5621)	Y	Y	Y
Isolator (IEC:62271-102)	Y	Y	Y
Current Transformer (IEC:60044/BS:3938/IS2705 / IEC: 61869)	Y	Y	Y
Voltage Transformer (IEC:186A / 358/IS3156/IEC60044/ IEC: 61869)	Y	Y	Y
Bus Post Insualtor (IEC:168 / 815 / IS:2544)	Y	Y	Y
Disc,Pin & String Insualtor (IEC:383 / IS:731)	Y	Y	Y
Surge Arrestor (IEC:99-4/IS:3070)	Y	Y	Y
Hardware fittings for Insulator (IS:2486 / BS:3288)	Y	Y	Y
Clamps & Connector (IS:10162 / 5561/ 617)	Y	Y	Y
Aluminium Tube (IS:5082 / 2673 / 2678)	Y	Y	Y
Conductor (IS:398)	Y	Y	Y
Galvanised Steel Structures (IS:2062/2629/4759/6745)	Y	Y	Y
Vibration Damper (IS:9708)	Y	Y	Y

Attributes / Characteristics / Items/Components Sub Systems	Make, Type Rating,and Model, Test Certificates	Routine & Acceptance Test as per relevant IS/IEC	Functional requirements as per NTPC Specification
Transmission Line Pole	Y	Y	Y
Control & Relay Panel	Y	Y	Y
Protection Relays	Y	Y	Y
Event Logger	Y	Y	Y
Time Synchronising Equipment	Y	Y	Y
Transmission Line Pole	Y	Y	Y
Relay Test Kit	Y	Y	Y
Surge Monitor	Y	Y	Y

Notes : 1) This is an indicative list of test/checks. The manufacture is to furnish a detailed Quality Plan indicating the practice and procedure along with relevant supporting documents during QP finalisation for all items.

2) All major Bought Out Items will be subject to NTPC approval.

FIRE EXTINGUISHERS

a) All fire extinguishers shall be tested as per relevant standard.

b) Performance / function test shall be carried out on sampling basis as per relevant code / standard.

16)Energy Meter

Attributes / Characteristics → / Items / Components / Sub- assembly ↓	Make, Model, Type, Rating & Finish	Conform to relevant Standard & NTPC spec	Dimensional check and Paint shade, thickness, adhesion & Finish checks	Complete physical examination for constructional features as per NTPC approved drgs & specification	Burn-In Test and Elevated Temperature Test as per specification	All routine & acceptance tests as per IS 13779
Electronic Components	Y	Y				
PCB for electronic cards	Y					
Electronic Cards	Y	Y		Y	Y	
Terminal Blocks as per IS 13779	Y	Y				
Instrument Transformer CTs & PTs (IS : 2705 & IS 3156)	Y	Y				
Sheet Steel (IS : 513)	Y	Y				
Synthetic Rubber Gaskets IS 11149	Y	Y				
Energy meter IS 13779	Y		Y	Y	Y	Y

Notes:

1. This is an indicative list of tests / checks. The manufacturer is to furnish a detailed Quality Plan indicating the practice and procedure along with relevant supporting documents.
2. Makes of all major Bought Out Items will be subject to NTPC approval.