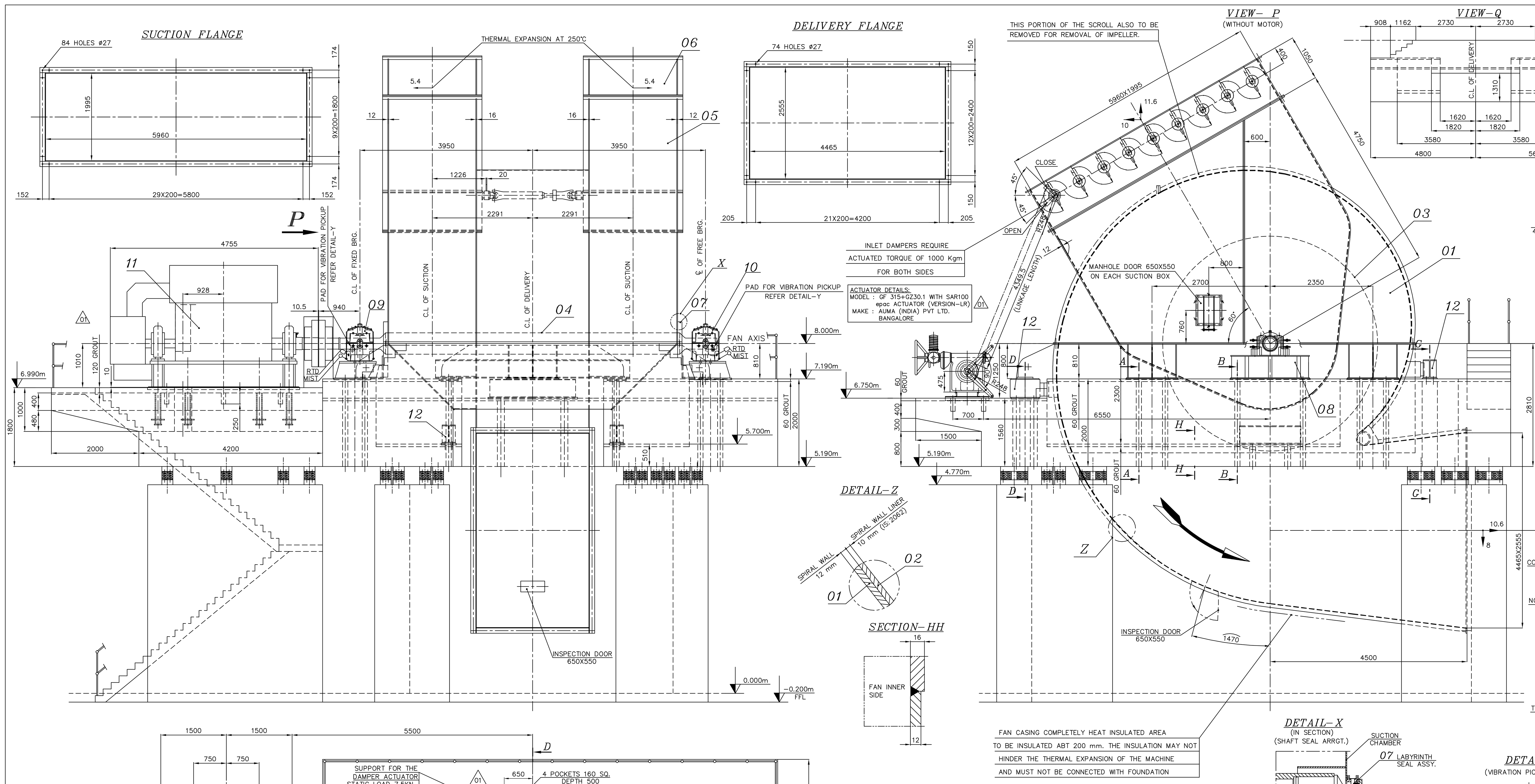

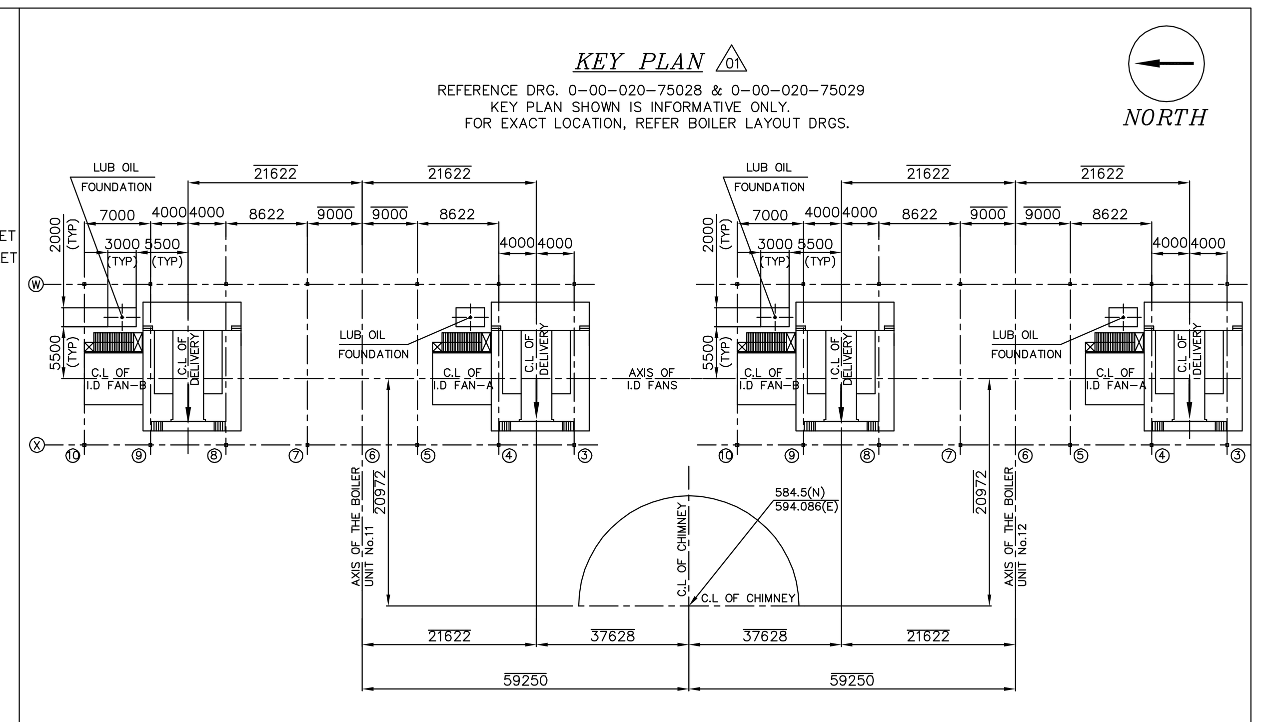

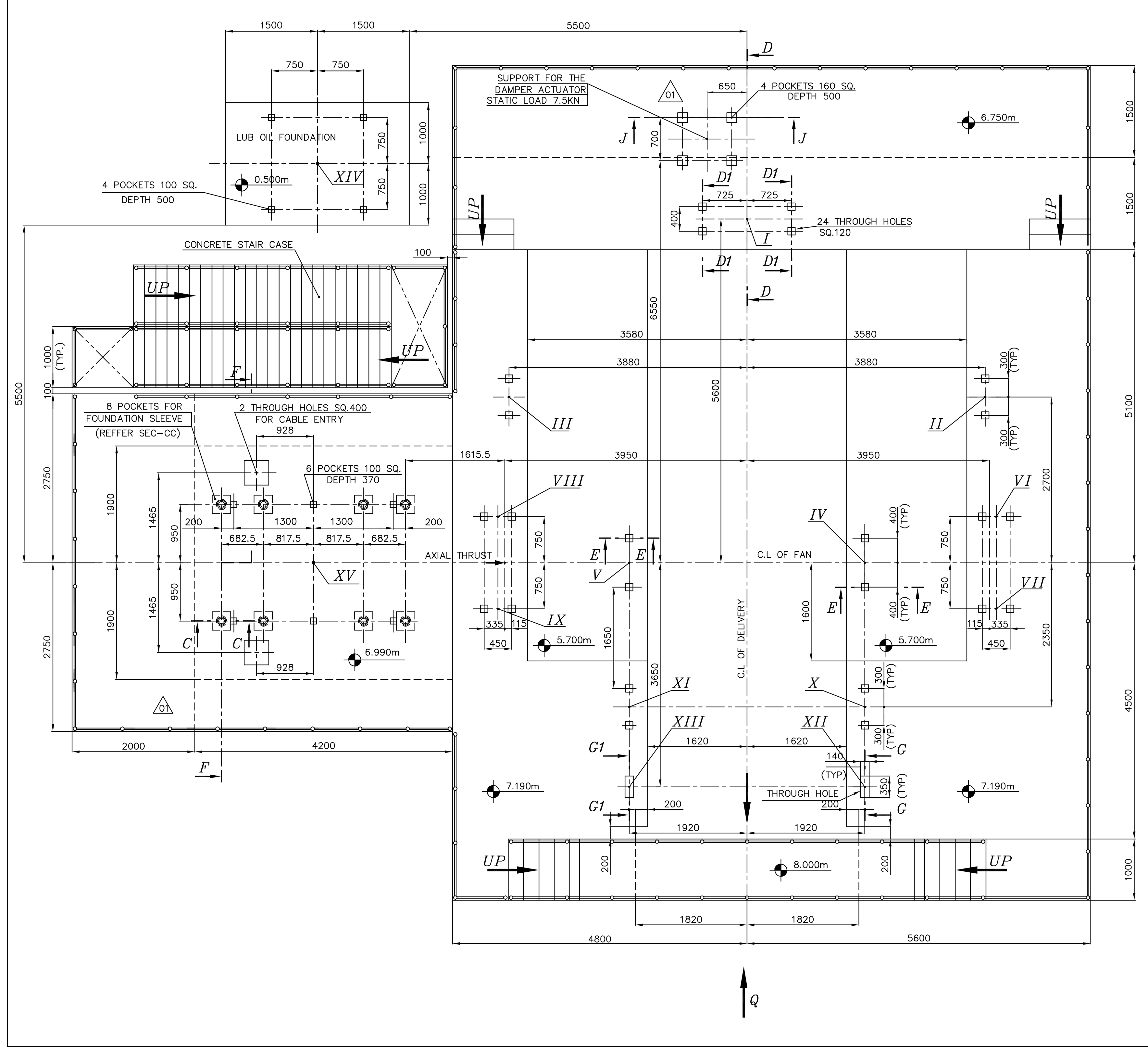

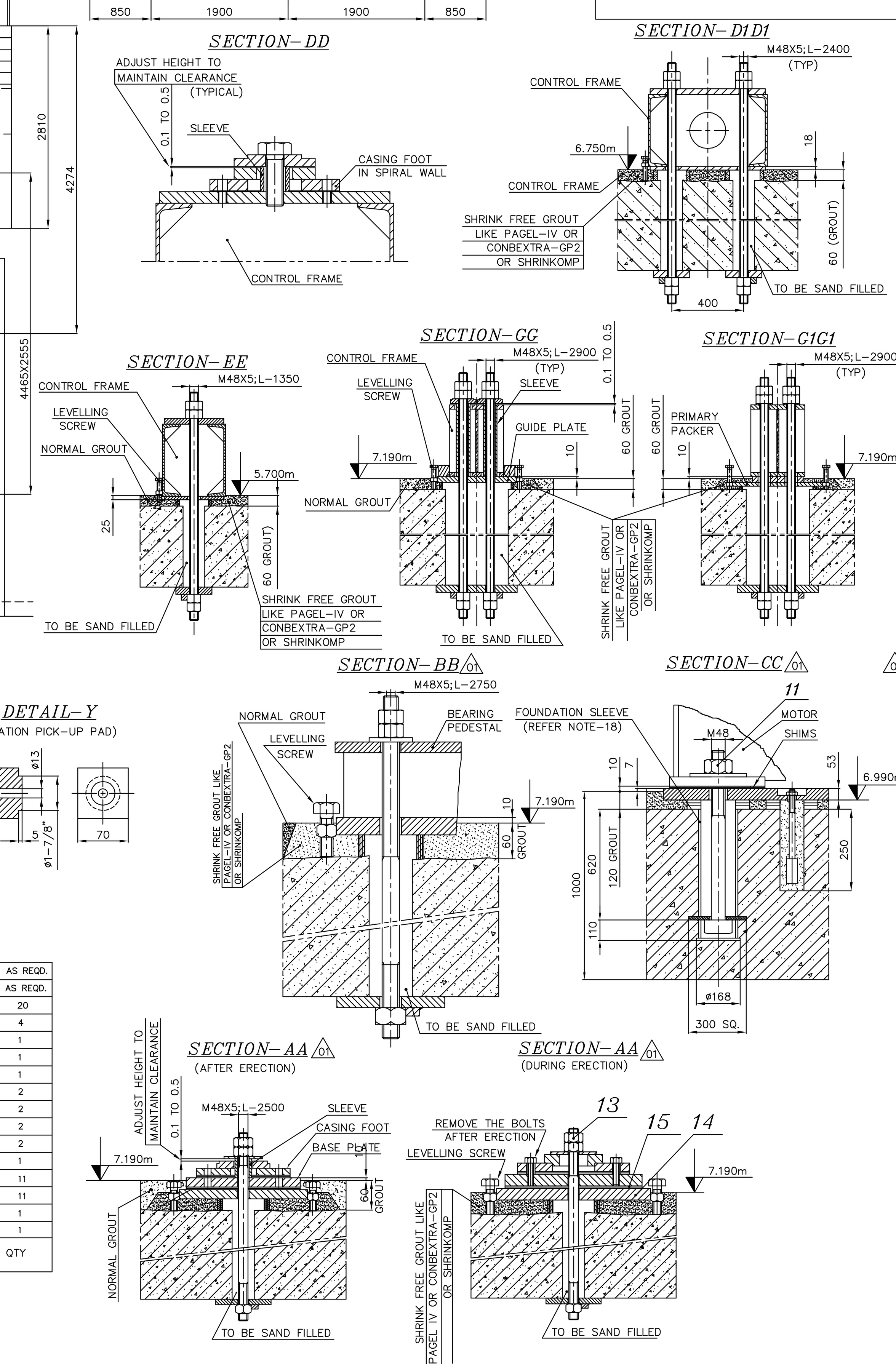

LOAD DATA FOR FOUNDATION

LINE / LOAD POINT	Supporting force resulting from own weight Y (KN)	1 / 2	Max. permissible unbalance force referred to supporting point 3) ±Y (KN)	±X (KN)	Force due to axial thrust Z (KN)	Supporting force resulting from pressures, impulses brg. thrust & normal moment of motor Y (KN)	Z (KN)	X (KN)	Supporting force due to thermal expansion 4) Z (KN)	X (KN)
1	2	3	4	5	6	7	8	9		
1 I	193	1/2				-8				±29
2 II	186	1/2				-8			±19	±20.4
3 III	186	1/2				-8			±19	±20.4
4 IV	5	1/2					-40			
5 V	5	1/2					-40			
6 VI	67.5	1/2	42 / 23	42						
7 VII	67.5	1/2	42 / 23	42						
8 VIII	69	1/2	42 / 23	42	14					
9 IX	69	1/2	42 / 23	42	14					
10 X	150	1/2				33			±18	±14
11 XI	150	1/2				33			±18	±14
12 XII	8	1/2							±3.2	
13 XIII	8	1/2							±3.2	
14 XIV	35	1/2								
15 XV	310	1/2								

GENERAL DATA

DESIGNATION		SYMBOL	DIMENSION	FAN	MOTOR
WEIGHT OF ROTOR PARTS		mrot	t	21.5	11.3
WEIGHT OF STATOR PARTS		mstat	t	94.0	10.8
MOMENT OF INERTIA		J	$Kg.m^2$	56600	–
OPERATING SPEED AT DESIGN POINT		n	min^{-1}	580	580
1st CRITICAL BENDING SPEED 1)		nkrit	min^{-1}	821	
HOUSING TEMPERATURE		tg	°C	250	
MAX. ROTATING UNBALANCE FORCE AT AXIS LEVEL 2)		Fu	KN	84.2	
MAX. ADMISSIBLE AMPLITUDE REFERRED TO SHAFT LEVEL	HORIZONTAL	Sh	μm	250	
	VERTICAL	Sv	μm	250	
	AXIAL	Sa	μm	250	
THRUST-ACTUATOR		Fst	KN		
TORQUE-ACTUATOR		Tst	Kgm		

1) WITH RIGID BEARINGS.
2) WITHOUT EXTRAS FOR VIBRATIONS INDICATE UNBALANCE FORCES INCLUDING DYNAMIC AMPLIFYING DUE TO RATIO OF CRITICAL BENDING SPEED TO OPERATING SPEED.
DYNAMIC AMPLIFYING $f = \frac{1}{1-\frac{n^2}{nkrit^2}} = \frac{1}{1-\frac{580^2}{821^2}} = 1.99632$

3)

LOAD CASE 1	UNBALANCE VECTOR VERTICAL $\hat{V}$ UNBALANCE FORCE	Hy = 0
LOAD CASE 2	UNBALANCE VECTOR HORIZONTAL $\hat{H}$ UNBALANCE FORCE X AXLE LEVEL / DISTANCE BETWEEN SUPPORT	Hy = UNBALANCE FORCE

4) $\Sigma H_x = 0$ $\Sigma H_y = 0$

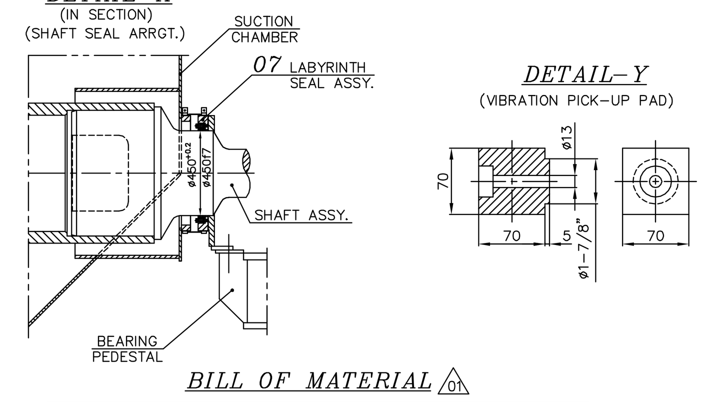

BILL OF MATERIAL

SL NO	DESCRIPTION	MATERIAL	THICKNESS mm	QTY
15	SHIMS	S.S	2	AS REQD.
14	PRIMARY PACKER	IS 2062	20	AS REQD.
13	FOUNDATION FASTENERS FOR FAN	ASTM A105	–	20
12	CONTROL FRAME	IS 2062	–	4
11	MOTOR WITH FNDN. FASTENERS	REFER MOTOR DRG.	–	1
10	FREE BEARING ASSEBLY	10" RTS	–	1
09	FIXED BEARING ASSEMBLY	10" RTS	–	1
08	BEARING PEDESTAL	IS 2062	–	2
07	LABYRINTH TYPE SHAFT SEAL	IS 2062 WITH CAF	–	2
06	INLET DAMPER CONTROL ASSEMBLY	IS 2062	8/12	2
05	SUCTION CHAMBER	IS 2062	12	2
04	SHAFT ASSEMBLY	TUBE: 15Mo3 END PINS:ST 500V	–	1
03A	WEAR LINER OF IMPELLER BLADES	XAR 400 (HARDNESS:400 BHN)	10	11
03	BLADES OF IMPELLER	NAXTRA 70 / ASTM A517 Gr.F	25	11
02	SPIRAL WALL LINER ASSY.	IS 2062	10	1
01	SPIRAL CASING ASSY.	IS 2062	12/16	1

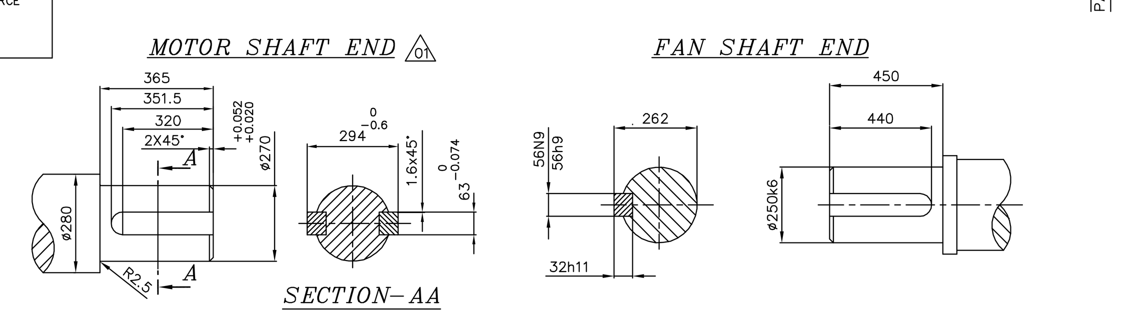

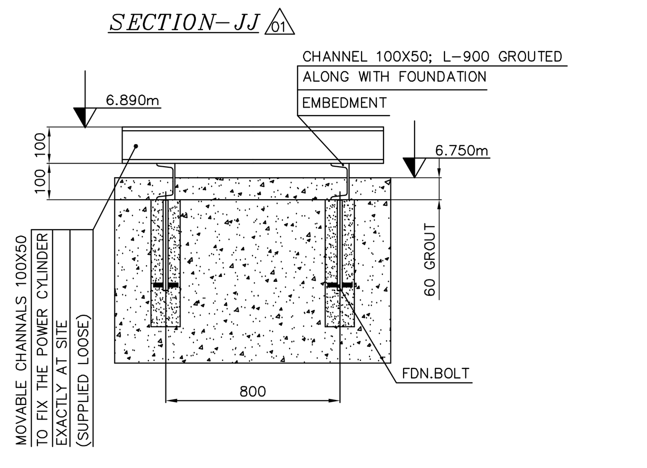

NOTES:-

01. THE LOADS INDICATED ON FOUNDATION ARE WITHOUT ALLOWANCES FOR VIBRATIONS. CIVIL DESIGNER IS RESPONSIBLE FOR PROPER DESIGN OF FOUNDATION TAKING INTO ACCOUNT OF THE ALLOWANCES FOR VIBRATION ALSO.
02. THE NATURAL FREQUENCY OF THE FOUNDATION SHOULD BE MINIMUM +20% AWAY FROM THE OPERATING FREQUENCY OF THE FAN. THE NATURAL FREQUENCY OF THE CONNECTING DUCT AND SUPPORTING STRUCTURE SHOULD BE CLEARLY AWAY FROM THE OPERATING FREQUENCY OF THE FAN.
03. ADOPT IS: 2974 / PART-IV FOR THE FOUNDATION DESIGN.
04. THE CONNECTING DUCTS AT INLET AND OUTLET OF FAN ARE SELF SUPPORTED AND SHOULD NOT BE WELDED WITH EXPANSION JOINTS.
05. FOUNDATION POCKETS SHOULD BE PERPENDICULAR TO THE FLAT SURFACES OF FOUNDATION.
06. ACCURATE TEMPLATES SHALL BE USED FOR LOCATING CORES FOR POCKET HOLES TO ENSURE THEIR DIMENSIONAL ACCURACY.
07. TOLERANCE BETWEEN ANY TWO POCKET CENTRES ±5 mm.
08. TOLERANCE ON CONCRETE LEVELS $^{+0}_{-25}$ mm.
09. IN AREAS WHERE SOLE PLATES AND ANCHOR PLATES ARE TO BE INCORPORATED IN FOUNDATION CONCRETE, THE SIZE OF THE COARSE AGGREGATE USED SHALL NOT EXCEED 20 mm AND DOWN GRADED TO FACILITATE CHIPPING AND SCRAPPING THEREBY ENSURING MAXIMUM CONTACT ON THE MATING AREAS.
10. NON-SHRINK GROUT IS TO BE USED. REFER GENERAL SPECIFICATIONS ISSUED BY BHEL/RANIPET FOR NON-SHRINK GROUT. THIS ALSO CONTAINS THE PREPARATIONS OF PRIMARY PACKERS & SHIMS.
11. GROUTING SHOULD BE DONE ONLY AFTER FINAL ALIGNMENT OF FAN.
12. ELEVATIONS SHOWN IN FOUNDATION PLAN INCLUDE GROUT THICKNESS.
13. GROUTING IS IN THE SCOPE OF BHEL.
14. ALL THE INSERTS, EMBEDMENTS, HANDRAILS, FOUNDATION BOLT ASSY, GROUTS AND GROUTING ARE IN THE SCOPE OF BHEL.
15. FAN FOUNDATION SHOULD NOT BE USED AS SUPPORT FOR OTHER STRUCTURES OR EQUIPMENTS.
16. FOUNDATION CONFIGURATION SHOWN IN THIS DRAWING IS ONLY INFORMATIVE/TYPICAL. TYPE AND DETAILS OF FOUNDATION ARE TO BE FINALISED BY CIVIL DESIGNER.
17. FOR MOTOR ERECTION, REFER MOTOR SUPPLIER'S ERECTION MANUAL.
18. FOUNDATION SLEEVE OF THE MOTOR IS TO BE EMBEDDED IN THE CONCRETE AS PER THE DIMENSION SHOWN. AFTER CONCRETE HAS SET, THE EXCESS PROTRUDING HEIGHT TO BE SUITABLY CUT-OFF.
19. LUB OIL SYSTEM WILL BE PROVIDED WITH SUITABLE CANOPY.
20. ALL ELEVATIONS ARE WITH RESPECT TO EL 0.00M WHICH CORRESPONDS TO RL.281.0m.

FAN DETAILS:-

TYPE : NDZV 47 SIDOR
WEIGHT OF FAN WITHOUT MOTOR & COUPLING : 120000 Kg
WEIGHT OF ROTATING PARTS : 21500 kgs.
GD^2 OF FAN : 226400 $kg.m^2$
SPEED OF FAN : VARIABLE
NO. OF FANS PER BOILER : TWO (IDENTICAL)
MAX. WEIGHT TO BE HANDLED FOR MAINTENANCE : 31000 Kg

MOTOR DETAILS:-

MAKE : M/s. BHEL/BHOPAL
TYPE : 1DQ4344
RATING : 4525 kW AT 580 RPM
SPEED RANGE : 100-580 RPM
WEIGHT OF MOTOR COMPLETE : 31000 kg
WEIGHT OF ROTATING PARTS : 11300 kg
WEIGHT OF STATOR PARTS : 10800 kg
MOTOR DRAWING NO. : 14030040476
GD^2 OF MOTOR : 7000 $kg.m^2$

LOADING ON MOTOR FOUNDATION:

REACTION DUE TO WEIGHT ON EACH SIDE (G) = 155 KN
MAX. SHORT CIRCUIT FORCE (MS) = 376 KN
REACTION DOWNWARD (MS+G) = 531 KN
REACTION UPWARDS (MS-G) = 221 KN

1. THE FORCES OCCUR ALTERNATELY INDEPENDENT OF THE DIRECTION OF ROTATION.
2. THE TRANSFER OF VIBRATIONS FROM SURROUNDING EQUIPMENT HAS TO BE AVOIDED BY SUITABLE LAYOUT OF FOUNDATON.
3. THE FIRST NATURAL FREQUENCIES OF THE FOUNDATION AFTER ERECTION OF THE MACHINE MUST DIFFER ATLEAST +25% & -20% FROM ONE & TWO TIMES RUNNING SPEED FREQUENCIES & TWO TIMES THE ELECTRICAL FREQUENCY.

MOTOR COOLER DATA:

WATER FLOW RATE (FOR TWO ELEMENTS) = 350 LPM
WATER INLET / OUTLET TEMPERATURE = 38°C \ 45°C
PRESSURE DROP = 500 mbar
OPERATING PRESSURE = MAX. 6 bar
TEST PRESSURE = 9 bar

MOTOR BEARING DATA:

TYPE : SLEEVE BEARING
SIZE : DE & NDE - ø250
LUBRICATION : RING LUBRCATED
LUBRICANT : IOC SERVOPRIME-68 or EQUIVALENT
OIL FILLING QTY. : 26 Litre PER BRG.

CUSTOMER NO. : R540 & R541

NTPC DRG. NO. 2250-101-01-RN-PVM-B-005A

JOB NO :
STATUS : CONTRACT
DISTRIBUTION :

REV.	DATE	ALTD:	CHKD: R.G	APPD: V.P.S
01	02.06.10	S.Mohana/OL	R.Giridhar	

01. DRAWING UPDATED AS PER CUSTOMER COMMENTS VIDE TRANSMITTAL REF:CC:PE:2250: 3:635, DT 21-08-09.
a. MOTOR AND ITS FOUNDATION DETAILS UPDATED.
b. ACTUATOR AND ITS FOUNDATION DETAILS UPDATED.
c. KEY PLAN ADDED.
d. NOTE-20 ADDED.
e. ELEVATION LEVEL INDICATED IN SEC-AA BB & CC.
f. LOAD DATA FOR FOUNDATION UPDATED.
g. NTPC DRG. NO UPDATED.

CAUTION: THE INFORMATION IN THIS DOCUMENT IS THE PROPERTY OF BHARAT HEAVY ELECTRICALS LIMITED. IT MUST NOT BE USED DIRECTLY OR INDIRECTLY IN ANY WAY DETRIMENTAL TO THE INTEREST OF THE COMPANY.

PROJECT
NTPC LTD.
VINDHYACHAL SUPER THERMAL POWER PROJECT
STAGE-IV (2X500 MW)
STEAM GENERATOR WITH ELECTROSTATIC PRECIPITATOR PACKAGE

BHARAT HEAVY ELECTRICALS LTD.
BOILER AUXILIARIES PLANT
RANIPET - 632 406

DEPT CODE		NAME	SIGN	DATE
M	DRN	K.N.R	sd........	18.07.2009
	DESN	R.G	sd........	18.07.2009
	CHD	V.P.S	sd........	18.07.2009
	APPD	V.P.S	sd........	18.07.2009

TITLE
GENERAL ARRANGEMENT OF INDUCED DRAFT FAN NDZV 47 SIDOR

ALL DIMENSIONS ARE IN mm | SCALE 1:50 | DRAWING NO. RP-DG-335-107-0204
BHEL/RANIPET DRG. NO. 0-00-099-21702 | SHEET 01 OF 01 | REV. 01
Size A0