COPYRIGHT AND CONFIDENTIAL
THE INFORMATION ON THIS DOCUMENT IS THE PROPERTY OF BHARAT HEAVY ELECTRICALS LTD. IT MUST NOT BE USED DIRECTLY OR INDIRECTLY IN ANY WAY DETRIMENTAL TO THE INTEREST OF THE COMPANY.

DRG. No. BHEL-SECI-SCCL30-DWG-CIV-012

1956x992x40 – Jiangxi Risun Green Energy CO.,LTD.

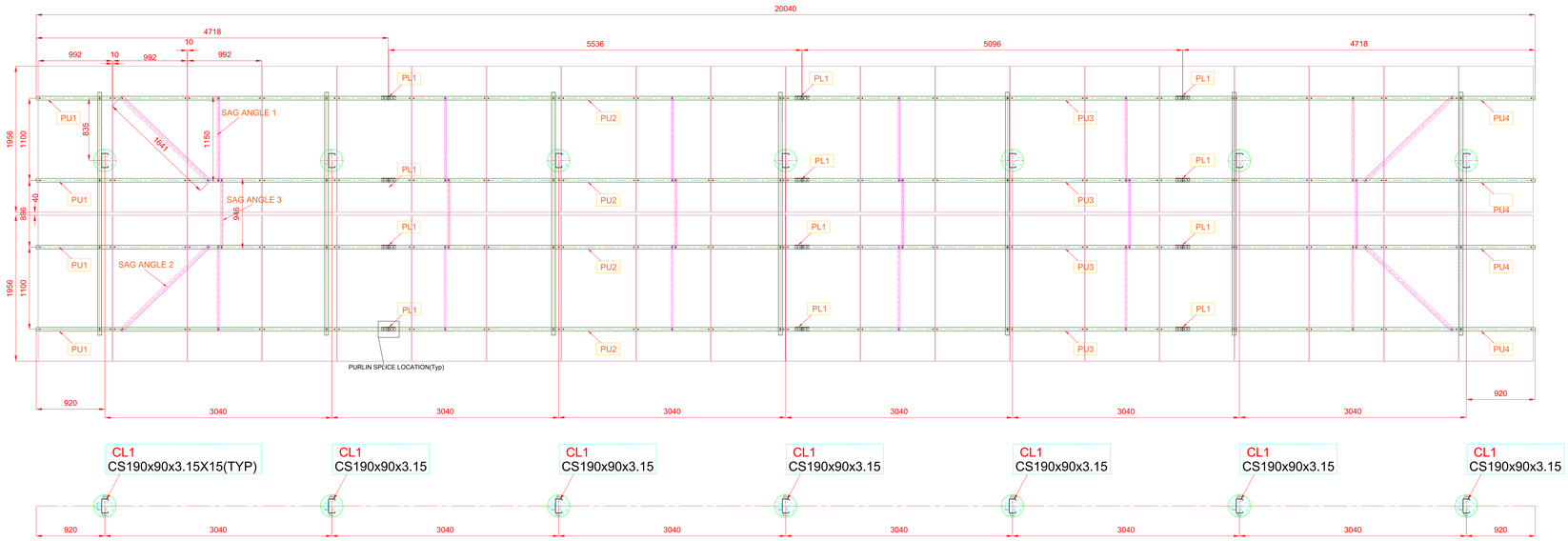

PLAN AT GROUND LEVEL AND MMS INCLINATION AT ZERO DEG.

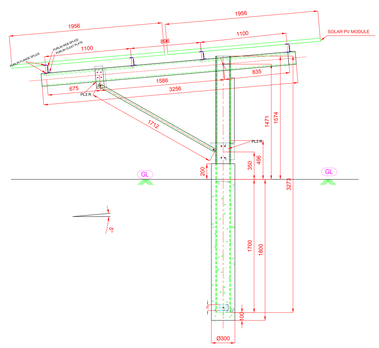

SIDE VIEW FOR TILT OF 25 Deg.

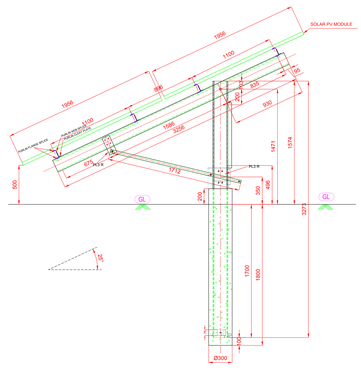

SIDE VIEW FOR TILT OF 25 Deg.

Tolerance Table:		
(i)	Steel Securities	(+/- 10.0 mm)
(ii)	(i) of Joist	+/- (1.5 mm)
	(ii) (i) of Hole	+/- (1.5 mm)
	d Hole Dia	
		=<20 mm: +(0.4 mm)
		>=20 mm:+ (0.5 mm)
	c Steel Dimensions	
		<20 mm:+ (0.5 mm)
		>=20 mm:+ (0.5 mm)
		>=20 mm:+(0.8 mm)
		>=30 mm:+ (1.0 mm)
	e Length	
	Sizes 3 mts	+/- (1.0 mm/m)
	Sizes to 6 mts	+/- (1.5 mm/m)
	Members section geometry.	No negative tolerance is permitted in the web(depth) of channel sections. All other dimensions to be as per IS:811 (Deviation of the profile shall not exceed +/- 0.5mm)
	g Angular Tolerance	+/-2 degrees.
	h Thickness	No negative tolerance.
(iii)	General assembly tolerance .linear	+/- (2mm)
(iv)	General assembly tolerance .angular	+/- (1 deg)
(v)	*For Module mounting hole	+0.5 mm (+ve purlin only) No positive tolerance)
	Hole Dia	
		=<20 mm: (0.4 mm)
		>=20 mm: (0.5 mm)
	Slot Dimensions	
		=<20 mm: (0.5 mm)
		>=20 mm: =<30 mm: (0.8 mm)
		>=30 mm: (1.0 mm)

* SUBJECT TO MINOR MODIFICATIONS AFTER PROTOTYPE.

GENERAL NOTES

1. ALL DIMENSIONS ARE IN MILLIMETERS UNLESS OTHERWISE SPECIFIED.
2. DO NOT SCALE THE DRAWING ONLY WRITTEN DIMENSIONS TO BE READ.

NOTES:(This note has to be read alongwith the Bill of material).

1. DIMENSIONS FOR COLD ROLLED STEEL ANGLE/CHANNEL SECTIONS SHALL BE AS PER BOM.
2. DIMENSIONS OF PLATES, FLAT BARS SHALL CONFORM TO IS:1730.
3. FABRICATION AND ERECTION SHALL BE CARRIED OUT IN ACCORDANCE WITH IS:800 AND IS:801.
4. ALL MMS MEMBERS TO BE HOT DIP GALVANIZED IN ACCORDANCE WITH IS:2629–1985 AND IS 4759. HOWEVER THE MINIMUM GALVANIZATION THICKNESS TO BE MINIMUM 80 MICRONS .GALVANIZATION SHALL BE DONE AFTER FABRICATION AND CUTTING OF HOLES.
5. HOLE SIZES ARE SHOWN AFTER GALVANIZATION/TREATMENT.
6. REMOVE ALL SHARP AND BURR EDGES.
7. THE PROTOTYPE SHALL BE INSPECTED JOINTLY BY SECI ,BHEL & FABRICATION VENDOR AT SHOP AND ANY MINOR MODIFICATION REQUIRED IN HOLE SPACING ,CUT LENGTHS ETC SHALL BE INCORPORATED IN FINAL MMS ASSEMBLY AS PER BOM.
8. NO SITE WELDING IS PERMITTED.
9. EVERY BOLT CONNECTION SHALL HAVE ONE SPRING WASHER +TWO PLAIN WASHER & HEXAGONAL NUT.
10. ALL FASTENER FOR MMS SHALL BE SS304 GRADE A2–70 CONFORMING TO IS 1363 FOR BOLT & NUT, IS 2016 FOR PLAIN WASHER & IS 3063 FOR SPRING WASHER.

BOLT TIGHTENING TORQUE VALUE MAXIMUM

BOLT VALUE MM	GRADE	TIGHTENING TORQUE VALUE (N–m)
M6	SS316–A4–70	5.90
M8	SS304–A2–70	14.5
M10	SS304–A2–70	30.0
M16	SS304–A2–70	121

* TIGHTENING TORQUE VALUES SUBJECT TO MINOR CHANGES W.R.T FIELD CONDITIONS.

NOTES:

1.PILE DETAILS WILL BE SUBMITTED THROUGH DIFFERENT MDL.

SOLAR PANEL DETAIL

MAKE	SIZE (MM)	Pitch–(Hor)mm	Pitch–(Ver)mm
jinagxi Risun Green Energy	1956X992	947	1100

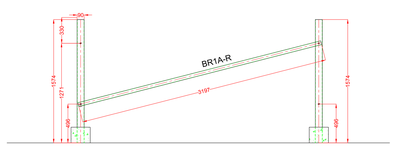

FRONT VIEW FOR BR1A–R

REV.	DATE	ALTERED / CHECKED / APPROVED	REV.	DATE	ALTERED / CHECKED / APPROVED
			01	31.05.19	REVISED AS PER STPP PROTOTYPE

	NAME	SIGN	DATE
DRAWN		NY	240519
CHECKED		PM	240519
APPROVED		MS	240519

DISTRIBUTION OF PRINTS

DEPT.	CODE
SC&PV	439

PROJECT TITLE : 129 MWp SOLAR POWER PROJECT FOR SCCL

CLIENT : SCCL-MANUGURU-30MW

CONSULTANT: SECI

BHARAT HEAVY ELECTRICALS LIMITED.
ELECTRONICS DIVISION, BANGALORE

TITLE: GA OF MODULE MOUNTING STRUCTURE
FOR GROUND SLOPE LESS THAN OR EQUAL TO 3 DEGREES.

No. OF SHEETS	14
SHEET No.	01
REV	01

BHEL DRG. No. BHEL–SECI–SD–SCCL30–DWG–CIV–012

REF. DRG. No.
SIGN. & DATE
INVENTORY No.