Tender Enquiry No	**1920-107**
Enquiry date	**20.12.2019**
Last time and date of tender submission	**15:00 Hrs 13.01.2020**
Tender opening time and date	**15:30 Hrs 13.01.2020**
Quotation Parts	***Two-part***
Item Description	**Seat Ring Tightners & Taper Spindle (Flaring mandrel & sleeve)**
Material Standard	***As per Annexure II & III***
Delivery schedule (In days)	***60 Days***
Validity of offer (In days)	***45 Days***
Test Certificates	***Required***
Guarantee / Warranty Certificate	***Required***

Item: Seat Ring Tightners & Taper Spindle (Flaring mandrel & sleeve)

Pre-Qualification Term

- Bidders need to submit one or more purchase order(s) for the supply of same or similar items/Machining Job Works of any of its customer within last 2 years [i.e. Purchase(s) order placed on or after 01.12.2017].

***Start-ups and MSE suppliers are encouraged to submit bid against this tender enquiry. This Pre-Qualification terms shall not be applicable to Start-Up Firms & MSEs. These relaxations and exemptions are in line with D.O. No. 5(4)/2016-BE-I dated 15.02.2017.**

For claiming Start-Up exemption, bidders have to give documentary evidence or undertaking.

For Claiming MSE benefits, bidder have to give documentary evidence like NSIC, UAM, etc.

S1. QUOTATION SUBMISSION

Tenders in two part bids are invited for Supply of **Seat Ring Tightners & Taper Spindle (Flaring mandrel & sleeve) to BHEL IVP Goindwal.**

Following point need to be noted by supplier as follows: -

Sealed tenders in two parts; Part-I: Techno-commercial bid and Part-II: Price bid are hereby invited for supply of '**Seat Ring Tightners & Taper Spindle (Flaring mandrel & sleeve) to BHEL IVP Goindwal'**as per tender enquiry. The relevant documents are attached with the Enquiry.

The two bids should be submitted in **separate sealed inner envelopes** duly mentioning the detail as follows:

Bid	Bid description	Superscribing on envelope	*** Should contain ***
Part I in First sealed envelope	Techno-Commercial Offer	Part-I (Techno-Commercial) bid against tender enquiry no: 1920-107 Dated 20.12.2019.	1. Acceptance of all terms and conditions of tender enquiry. (Preferred is submitting signed copy of terms and conditions; if nothing is mentioned for any term, it shall be summarily concluded that the same is acceptable and no representation whatsoever shall be entertained later on). 2. **Un-priced** bid as per format attached. **All details, i.e. whether quoted for item, duties and taxes etc. should be filled**.
Part II in Second sealed envelope	Price Bid	Part-II (Price) bid against tender enquiry No: 1920-107 Dated 20.12.2019 .	***Price bid in the format attached***. **Anything other than prices mentioned in the price bid shall be considered invalid & in no case will be accepted.**

All the sealed envelopes should be put in outer sealed envelope superscripting all details i.e. Enquiry Number, Date, Supplier's Name and Address and Item.

S2 General Contract Conditions

These Special terms and conditions and GCC collectively are the part of tender terms and conditions.

CHECKLIST AND SEQUENCE OF DOCUMENTS TO BE SUBMITTED IN TWO PARTS BIDS

S. No.	Document		Status
1	Envelope should contain (1) Techno-Commercial bid	Sealed envelope marked as Part-Techno-Commercial Bids"	Yes, Sealed
2	Price Bid sealed in separate envelope super scribing tender enquiry detail, due date of opening, sender address	Sealed envelope marked as Part-II "Price Bid"	Yes, sealed
3	All two sealed envelopes put in an outer envelope mentioning all details like Enquiry no., description, due date		Yes

Annexure-II : Unprice Bid format for Tender Enquiry No. 1920-107 Dated 20.12.2019 Due date of opening 13.01.2020.

Sr. No.	Material	Material Description	Material Specification	Unit of measurement	Req. Qty	Quoted
1	GWT670000430	SEAT RING TIGHTNER 2-C300-RV/SV SEAT RING TIGHTNER 2-C300-RV/SV ; Drg.: 20-T-44-24387; Tool No. 44-54719-00	1.Material of construction can be EN-8 / IS-1875 CL.4. 2.Tool no. must be punched beofre hardening. 3.Dimensional inspection by BHEL before hardening. 4.Material composition certificate and Heat treatment/Hardening chart must be provided by vendor.	NO	2	Yes/No
2	GWT670000440	SEAT RING TIGHTNER 2-C150/300-FV SEAT RING TIGHTNER 2-C150/300-FV ; Drg.: 20-T-44-17185; Tool No. 44-52835-00		NO	4	Yes/No
3	GWT670000431	SEAT RING TIGHTNER 3-C300-RV/SV SEAT RING TIGHTNER 3-C300-RV/SV ; Drg.: 20-T-44-24387; Tool no. 44-54717-00		NO	1	Yes/No
4	GWT670000441	SEAT RING TIGHTNER 3-C150/300-FV SEAT RING TIGHTNER 3-C150/300-FV ; Drg.: 20-T-44-17185; Tool No. 44-52975-00		NO	1	Yes/No
5	GWT670000432	SEAT RING TIGHTNER 4-C300-RV/SV SEAT RING TIGHTNER 4-C300-RV/SV ; Drg.: 20-T-44-24387; Tool no. 44-54718-00		NO	3	Yes/No
6	GWT670000442	SEAT RING TIGHTNER 4-C150/300-FV SEAT RING TIGHTNER 4-C150/300-FV ; Drg.: 20-T-44-17185; Tool no. 44-54007-00		NO	2	Yes/No
7	GWT670000433	SEAT RING TIGHTNER 6-C300-RV/SV SEAT RING TIGHTNER 6-C300-RV/SV ; Drg.: 20-T-44-24387; Tool no. 44-54640-00		NO	1	Yes/No
8	GWT670000434	SEAT RING TIGHTNER 8-C300-RV/SV SEAT RING TIGHTNER 8-C300-RV/SV ; Drg.: 20-T-44-24387; Tool no. 44-54641-00		NO	3	Yes/No
9	GWT670000443	SEAT RING TIGHTNER 6-C150/300-FV SEAT RING TIGHTNER 6-C150/300-FV ; Drg.: 20-T-44-17185; Tool no. 44-54196-00;		NO	2	Yes/No
10	GWT670000434	SEAT RING TIGHTNER 8-C300-RV/SV SEAT RING TIGHTNER 8-C300-RV/SV ; Drg.: 20-T-44-24387; Tool no. 44-55168-00;		NO	1	Yes/No
11	GWT67001008	TAPER SPINDLE TAPER SPINDLE / DRG. NO. : 30-T-42-31323-00 TOOL NO. 42-54499-82	1.Supply of Taper Spindle (Flaring mandrel & sleeve) with material as per drawings. 2.Material for Taper Spindle is EN31 and for Sleeve is EN353. 3.Tool no. to be punched before hardening. 4.Dimensional inspection by BHEL before hardening. 5.Material composition certificate and Heat Treatment/	NO	3	Yes/No
12	GWT67001009	SLEEVE SLEEVE / DRG. NO. : 30-T-42-31324-02, Tool no. 42-54499-83		NO	3	Yes/No

GST rate	Whether GST is applicable? (kindly tick)	Applicable / Not applicable
	If GST is applicable, kindly tick whether it is Extra / Inclusive	Extra / Inclusive
	% age rate of GST (if applicable)	*Please mention clearly>>*
Delivery destination (FOR Goindwal Sahib basis)		*Please accept>>*
Validity of offers (**As per BHEL terms 45 days validity is required)**		*Please accept>>*

The above prices are **Firm, without any price esclation; are Rs. per unit Basis;** and **are on FOR Goindwal Sahib basis.**

We accept all terms and conditions of the Tender Enquiry No. 1920-107 Dated 20.12.2019 .

Authorised signatory with seal

Annexure-III : Price Bid format for Tender Enquiry No. 1920-107 Dated 20.12.2019 Due date of opening 13.01.2020.

0	Material	Material Description	Material Specification	Unit of measurement	Req. Qty	Unit Basic Price, Rs. (to be filled by bidder)	
						In Figures	In Words
1	GWT670000430	SEAT RING TIGHTNER 2-C300-RV/SV SEAT RING TIGHTNER 2-C300-RV/SV ; Drg.: 20-T-44-24387; Tool No. 44-54719-00	1.Material of construction can be EN-8 / IS-1875 CL.4. 2.Tool no. must be punched beofre hardening. 3.Dimensional inspection by BHEL before hardening. 4.Material composition certificate and Heat treatment/Hardening chart must be provided by vendor.	NO	2		
2	GWT670000440	SEAT RING TIGHTNER 2-C150/300-FV SEAT RING TIGHTNER 2-C150/300-FV ; Drg.: 20-T-44-17185; Tool No. 44-52835-00		NO	4		
3	GWT670000431	SEAT RING TIGHTNER 3-C300-RV/SV SEAT RING TIGHTNER 3-C300-RV/SV ; Drg.: 20-T-44-24387; Tool no. 44-54717-00		NO	1		
4	GWT670000441	SEAT RING TIGHTNER 3-C150/300-FV SEAT RING TIGHTNER 3-C150/300-FV ; Drg.: 20-T-44-17185; Tool No. 44-52975-00		NO	1		
5	GWT670000432	SEAT RING TIGHTNER 4-C300-RV/SV SEAT RING TIGHTNER 4-C300-RV/SV ; Drg.: 20-T-44-24387; Tool no. 44-54718-00		NO	3		
6	GWT670000442	SEAT RING TIGHTNER 4-C150/300-FV SEAT RING TIGHTNER 4-C150/300-FV ; Drg.: 20-T-44-17185; Tool no. 44-54007-00		NO	2		
7	GWT670000433	SEAT RING TIGHTNER 6-C300-RV/SV SEAT RING TIGHTNER 6-C300-RV/SV ; Drg.: 20-T-44-24387; Tool no. 44-54640-00		NO	1		
8	GWT670000434	SEAT RING TIGHTNER 8-C300-RV/SV SEAT RING TIGHTNER 8-C300-RV/SV ; Drg.: 20-T-44-24387; Tool no. 44-54641-00		NO	3		
9	GWT670000443	SEAT RING TIGHTNER 6-C150/300-FV SEAT RING TIGHTNER 6-C150/300-FV ; Drg.: 20-T-44-17185; Tool no. 44-54196-00;		NO	2		
10	GWT670000434	SEAT RING TIGHTNER 8-C300-RV/SV SEAT RING TIGHTNER 8-C300-RV/SV ; Drg.: 20-T-44-24387; Tool no. 44-55168-00;		NO	1		
11	GWT67001008	TAPER SPINDLE TAPER SPINDLE / DRG. NO. : 30-T-42-31323-00 TOOL NO. 42-54499-82	1.Supply of Taper Spindle (Flaring mandrel & sleeve) with material as per drawings. 2.Material for Taper Spindle is EN31 and for Sleeve is EN353. 3.Tool no. to be punched before hardening. 4.Dimensional inspection by BHEL before hardening. 5.Material composition certificate and Heat Treatment/ Hardening Chart to be provided by vendor.	NO	3		
12	GWT67001009	SLEEVE SLEEVE / DRG. NO. : 30-T-42-31324-02, Tool no. 42-54499-83		NO	3		

Nothing except prices will be entertained in part-II of tender.

Authorised signatory with seal

TP-DG-20-T-44-17185
CORPORATE DRG ID

CHAMFER THE EDGES

3.2 / 1.6 / 0.8

TOLERANCE NOT SPECIFIED SHALL BE AS PER MEDIUM IS: 2102

SL No:	TOOL No:-	PARAMETER NB	PARAMETER NP	SEAT RING DRG No	DIMENSIONS A	B	D1	D2	L	R	S	t1	t2	W	USE WITH TOOL No	TYPE	GROUP	OLD ASSY DRG No:	APPLICABLE GROUP	DSD BY	CHECKED BY	TOTAL NET Wt	DATE	REMARKS
1	44-50204-00	300	40	1-V-183-1376	245	238	247	~~238~~ 239.5 (F)	25	3	35	8	3	~~10~~ 12.5 (F)	50-52410-00	101	43-44	20-T-44-13771	183, 184, 1254	V.R.V		11.88	21.10.71	
2	44-50205-00	200	40	1-V-126-1376	155	148	158	~~148~~ 149.5 (F)	25	3	35	8	3	~~10~~ 12.5 (F)	"	101	43-42	20-T-44-13773	185	V.R.V		5.84	21.10.71	
3	44-50206-00	150	40	1-V-0000-1376/1	130	124	132	~~124~~ 124.5 (F)	24	3	35	8	3	~~6~~ 7.5 (F)	"	101	43-41	20-T-44-13774	125, 191, 192, 545 199, 1222	V.R.V		4.2	21.10.71	
4	44-50233-00	250	40	1-V-181-1376	218	206	222	~~208~~ 209.5 (F)	25	3	35	8	3	~~10~~ 12.5 (F)	"	101	43-43	20-T-44-13636	181, 182, 1224 1230, 1253	V.R.V		8.17	13.12.71	
5	44-50268-00	70	40/64	1-V-0000-1376/1	74.5	66	75	70	24	3	(B) 20	8	3	(C) 7.5	(A) 50-52405-00	101	43-37	30-T-44-18146	122, 129, 188, 189, 195 196, 548, 1319, 1321	V.R.V		1.43	24.2.72	
6	44-50306-00	125	40	1-V-0000-1376/1	105	98	107	~~100~~ 100.5 (F)	24	3	35	8	3	~~6~~ 7.5 (F)	50-52410-00	101	43-40	30-T-44-19086	124, 197, 198 544, 1221	V.R.V		2.51	24.6.72	
7	44-50388-00	10"	150lbs	1-V-0000-1376/1	254	247.5	262	247.5	30	3	35	6	3	~~10~~ 12.5 (F)	"	802	11-16	20-T-44-16090	1375	V.A		8.0	28.5.74	
8	44-52000-00	4"	150lbs	3-V-1373-2618/3	(E) 101.5	94	106	(E) 94.5	28	3	20	8	3	(F) 7.5	50-52405-00	801	11-12	30-T-44-22102	1372	T.T.V				
9	44-52005-00	6"	150lbs	3-V-1372-2604/3	150	143	152	143	32	3	35	8	3	10	50-52410-00	801	11-14	30-T-44-22103	1373	T.T.V				
10	44-52835-00	50	40	1-V-0000-1376/1	53	44	55	48	16	2	16	6	2	(C) 7.5	(A) 50-52415-00	101	43-36	30-T-44-17797	121, 1433, 540, 541, 187	B.M.V			29.5.76	
11	44-52975-00	100	40	1-V-0000-1376/1	83	74	85	75	18	2	(B) 20	6	2	~~7~~ 7.5 (F)	50-52405-00	101	43-37	—	123, 180, 1220, 542 1320, 1371, 1378, 1434	M.C.K		0.9	13.11.76	
12	44-53265-00	6"	150 300	2-V-1158-2345	162	152	162	151	25	3	26	6	3	(D) 12.5	50-52471-00	801	21-14	—	1153, 1158	A.S.D		3.61	11.3.78	
13	44-54007-00	4"	150 300	2-V-1157-2345	110	100	112	100	16	3	20	5	3	7.5	50-52471-00	801	21-12	—	1152, 1157	T.R		1.5	3.7.78	
14	44-54196-00	8" 200	150:300 16	2-V-0000-2366/1	213	200	214	202	30	3	35	10	3	12.5	50-52410-00	101			1154; 1159	T.R		8.2	29.01.81	
15	44-54197-00	10" 200	150:300 16	2-V-0000-2366/1	264	250	265	253	35	3	35	10	3	12.5	50-52410-00	101			1592; 1181; 1180	T.R		12.4	29.01.81	
16																								

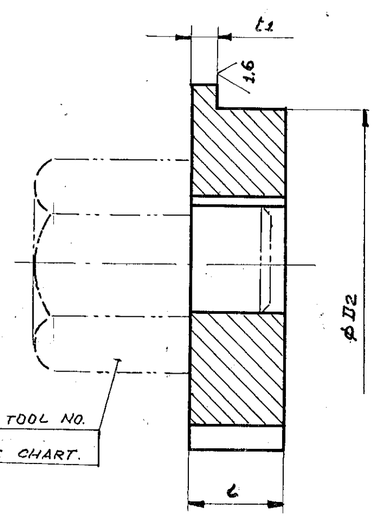

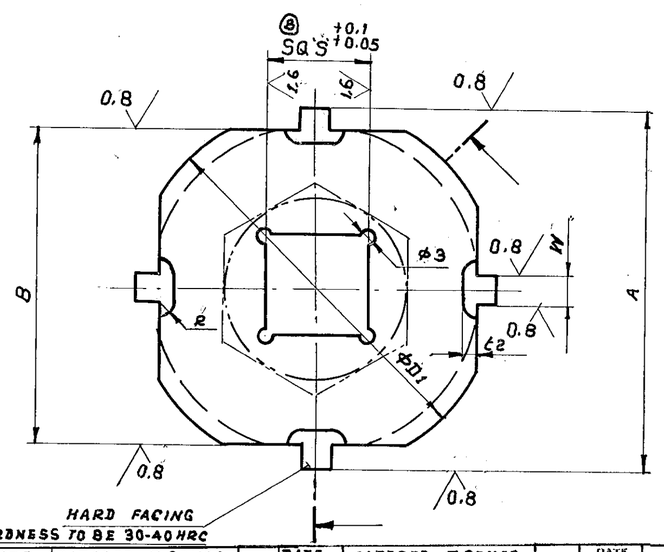

E	DATE 160581	ALTERED: R. SRINIVASAN CHECKED:	D	DATE 29.01.81	ALTERED - T. RAMAR CHECKED -	C	DATE 15.11.79	ALTERED - T. RAMAR CHECKED:	B	DATE 4.7.78	ALTERED - T. RAMAR CHECKED -	A	DATE 30.8.77 ALTERED P.P.M CHECKED P.G
(E)	IN SL.NO 8 THE DIMN A101.5 D294.54 W 7.5 WERE 101, 94 & 7.		D	INSL.NO.12 THE DIMN W 12.5 WAS 11.5.		(C)	INSL.NO.5 THE DIMN W 7.5 WAS 6. INSL.NO.10 THE DIMN W 7.5 WAS 4.5		(B)	DIMN S +0.1 +0.05 WAS S H7		ZONE (A)	DIMN 20 WAS 16. 50-52405 WAS 50-52415

	ϕD1 X L			BM-C16					
NO. OF PIECES	DESCRIPTION	SEM. PRO/SEQ. NO.	INT. MAT/ SEQ. NO.	FINAL MATERIAL	SCRAP SORT	NET WT.(KG)	GROSS WT.(KG)	DRAWING NO.	ITEM NO

COMP DRG NO:

COMP DES

TYPE & GROUP

MARK - 44 - XXXXX - 00 (G1)

RANGE:- W.C - 9535

USE WITH

BHARAT HEAVY ELECTRICALS LTD.,

BOILER PLANT UNIT, TIRUCHIRAPALLI-14

FIRST ANGLE	SCALE	DRAWN	B.M.V / T.R
		CHECKED	
		APPROVED	
ALL DIMENSIONS IN MILLIMETRES		DATE	

TOTAL NET WT.(KG)

TYPE

NEW /OLD DRG. NO.

TITLE SEAT RING TIGHTNER

SEATTITR

DRAWING NO. 20-T.44-17185

REV: (G1)

CAUTION

THE INFORMATION CONTAINED IN THIS DRAWING IS THE PROPERTY OF BHARAT HEAVY ELECTRICALS LTD., BOILER PLANT UNIT, TIRUCHY-14 AND SHALL NOT BE USED WITHOUT THEIR EXPRESS WRITTEN PERMISSION IN ANY FORM OR PART THEREOF FOR ANY OTHER PURPOSE THAN FOR WHICH IT IS SENT TO YOU.

05-228

(G) DATE 150783 ALTERED: T.R CHECKED:- DIMNS. 75 & 151 WERE 79.5 & 153.

(F) DATE 190881 ALTERED:- P.G CHECKED:- DIMENSIONS ARE CHANGED.

TP-DG-20-T-44-17185
CORPORATE DRG ID

DRAWING NO. 20-T-44-24387/04

* HARD FACING HARDNESS TO 35-40 HRc

CHAMFER ALL SHARP EDGES

3.2 / 1.6

SL.NO.	TOOL NO.	COMPONENT DRG. NO.	D	D1	D2	PCD	SQ.A	L	L1	W	B	W1	WT.	REMARKS	
1	44-54640-00	3-V-2480-06650	138	128	30	75	20	20	10	9.5	142	27	1.5	6"-300	03
2	44-54641-00	3-V-2670-06650	183	173	45	95	20	20	10	9.5	188	27	2.5	8"-300	03
3	44-54717-00	3-V-2478-06650	72	58	--	--	20	20	10	6.5	72	24	0.5	3"-300	
4	44-54718-00	3-V-2479-06650	92	78	20	60	20	20	10	6.5	92	24	0.8	4"-300	
5	44-54719-00	3-V-2477-02951	54	46	--	--	20	15	7	6.5	54	24	0.2	2"-300	
6	44-55131-00	3-V-NH51-25023	375	349	110	200	02 25.5	20	10	14.5	384	32	10	16"-300	
7	44-55132-00	3-V-NH52-25023	365	325	100	180	02 25.5	20	10	14.5	372	32	9.5	16"-600	
8	44-55133-00	3-V-NH50-25023	300	294	80	160	02 25.5	20	10	14.5	308	32	7	14"-300	03
9	44-55168-00	3-V-P366-24491	208	196	50	100	20	20	10	9.5	210	27	4.6	10"-300	03
10	44-55177-00	3-V-0000-25255	300	289	80	160	25.5	20	10	9.5	302	27	6.9	12"-300	04

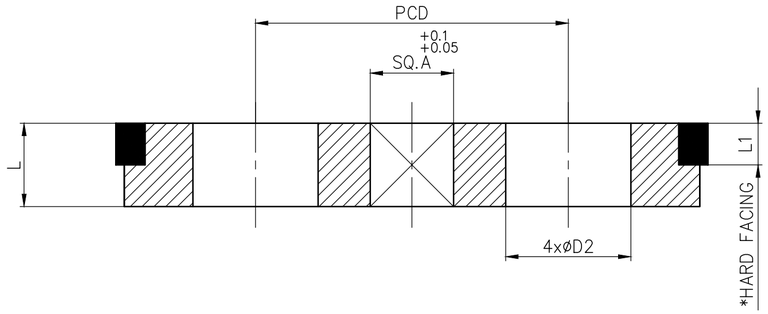

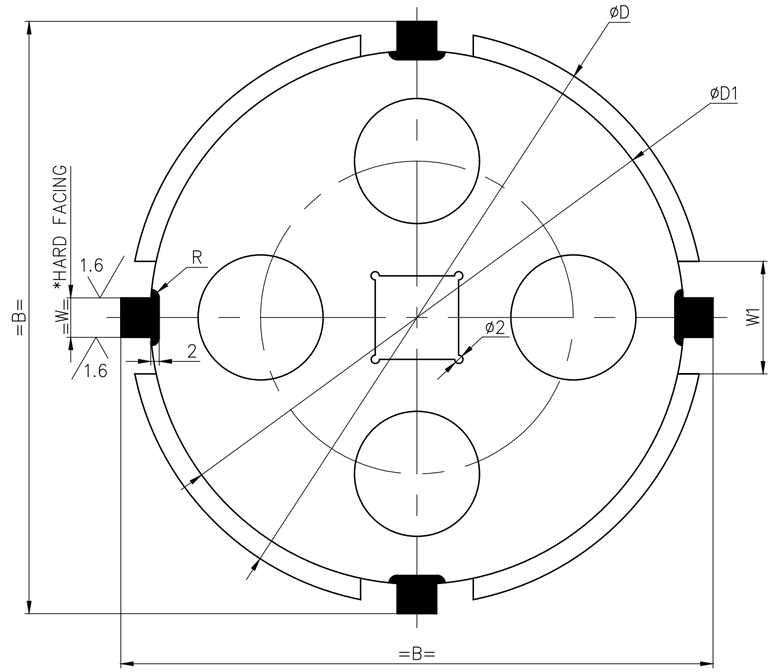

TOLERANCE FOR UNTOLERANCED DIMENSIONS	
UPTO 6 MM	= ±0.1 MM
> 6 UPTO 120 MM	= ±0.2 MM
MORE THAN 120 MM	= ±0.5 MM
ANGULAR TOLERANCE	= ±0.5 Deg
CHAMFER	= ±0.5 Deg

NO. OF PIECES	DESCRIPTION	SEM. PRO/SEQ. NO.	INT. MAT/SEQ. NO.	FINAL MATERIAL	SCRAP SORT	NET WT.(KG)	GROSS WT.(KG)	DRAWING NO	ITEM NO.
	ØDxL			IS: 2062 Fe 410 Gr.B					

COMP. DRG. NO.

COMP. DESC. SEAT RING

GROUP: OV WC: 9535

TOOL NO :- 44- -00

BHARAT HEAVY ELECTRICALS LTD.,

BOILER PLANT UNIT, TIRUCHIRAPALLI-14

FIRST ANGLE. SCALE NTS

ALL DIMENSIONS IN MILLIMETRES.

DRAWN	SANTOSH	TOTAL NET WT.KG	
CHEKED	K.S.K.	TYPE	
APPROVED	K.S.K.		
DATE	24/12/2012	NEW/OLD DRG NO.	

TITLE. SEAT RING TIGHTNER

DRAWING NO. 20-T-44-24387 REVISION 04

CAUTION

THE INFORMATION CONTAINED IN THIS DRAWING IS THE PROPERTY OF BHARAT HEAVY ELECTRICALS LTD BOILER PLANT UNIT,TIRUCHY-14 AND SHALL NOT BE USED WITHOUT THEIR EXPRESS WRITTEN PERMISSION IN ANY FORM OR PART THEREOF FOR ANY OTHER PURPOSE THAN FOR WHICH IT IS SENT TO YOU.

293-090

ZONE	DATE	ALTERED	CHECKED	REMARKS
04	07.06.17	SANTOSH	GKC	SI.NO.-10 ADDED
03	23.12.15	SANTOSH	GKC	SI.NO.-9 ADDED AND REMARKS COLUMN INTERCHANGED FOR SLNO.1 & 2. (CORRECTED)
02	09.04.13	KSK	KSK	SQ.A 25.5 WAS 20 FOR SI.NO.-6,7 AND 8.
01	24.12.12	SANTOSH	SANTOSH	SI.NO.-6,7 AND 8 ADDED SOFT COPY CREATED

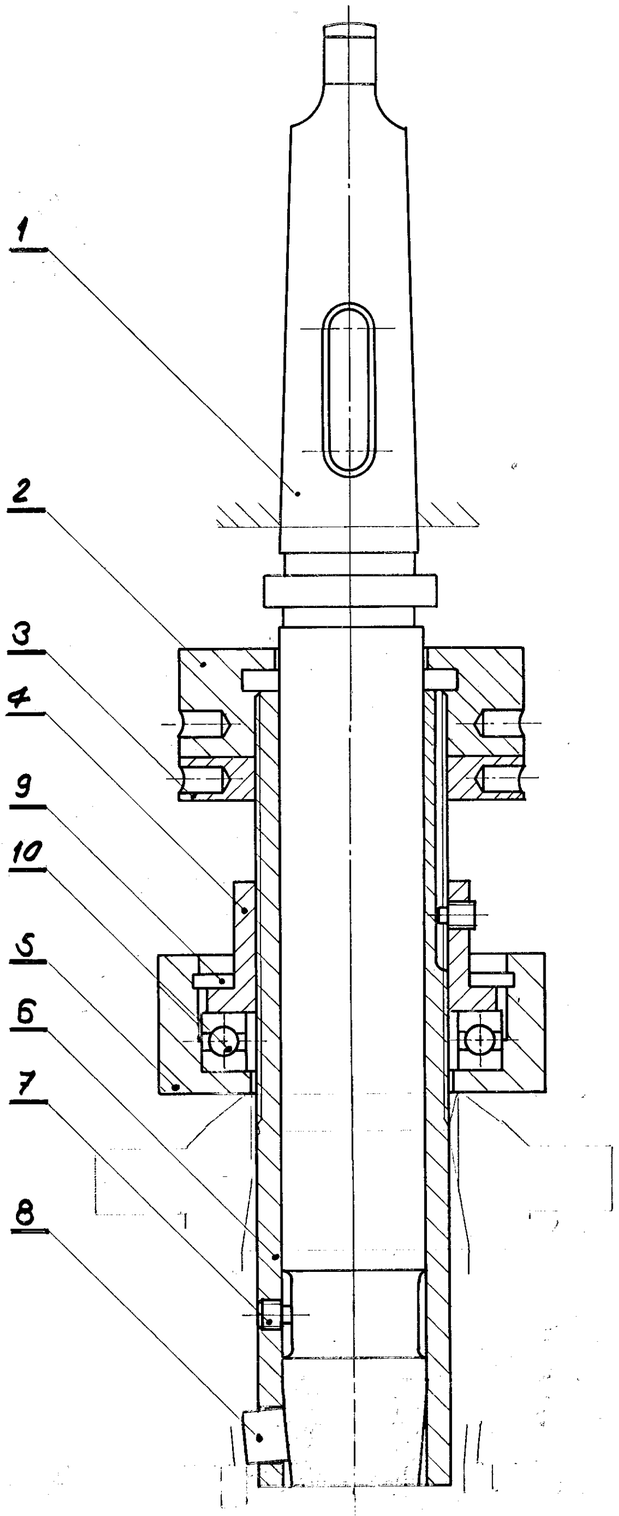

TOLERANCE NOT SPECIFIED
SHALL BE AS PER
MEDIUM IS: 2102-

NO. OF PIECES	DESCRIPTION	ITEM / DRG. NO	INT. MAT / SPEC.	FINAL MATERIAL	SCRAP SORT	NET WT.(KG)	GROSS WT.(KG)	DRAWING NO.	ITEM NO
1	THRUST BEARING		SKF-5110						10
1	INT. CIRCLIP ϕ 70		IS-3075(P-2)						9
3.	ROLLER	(42.54499-81)	IS: 1570T75W18 Co6 Cr4		81	0.021		40.T.42.37192	8
2	GRUB SCREW			IS:1875CL4		0.002		40.T.42.37193	7
1	SLEEVE		IS:1570 13Ni3Cr80		83	1.0		30.T.42.31324 B	6
1	HOUSING			IS:1875CL4		0.6		40.T.42.37191	5
1	COLLAR NUT			IS:1875CL4		0.7		40.T.42.37190	4
1	LOCK NUT			IS:1875CL4		0.2		40.T.42.37189	3
1	STOP NUT			IS:1875CL4		0.6		40.T.42.37188	2
1	TAPER SPINDLE			IS:1570 T90 Mn2W50 Cr45 CERT.	82	2.2		30.T.42.31323	1

COMP. DRG. NO.	I.V.1772.02554
COMP. DES.	2"-150# BODY
TYPE & GROUP	OV

TOOL No. 42.54499.01

W.C-3333

BHARAT HEAVY ELECTRICALS LTD.,

BOILER PLANT UNIT, TIRUCHIRAPALLI-14

FIRST ANGLE | SCALE 1:1 | DRAWN T. RAMAR 180464 | CHECKED | APPROVED | DATE | TOTAL NET WT.(KG) | TYPE | NEW/OLD DRG. NO.

ALL DIMENSIONS IN MILLIMETRES

TITLE FLARING UP MANDREL

FLARMDRL

DRAWING NO. 20.T.42.22232

REVISION A

CAUTION

THE INFORMATION CONTAINED IN THIS DRAWING IS THE PROPERTY OF BHARAT HEAVY ELECTRICALS LTD., BOILER PLANT UNIT, TIRUCHY-14 AND SHALL NOT BE USED WITHOUT THEIR EXPRESS WRITTEN PERMISSION IN ANY FORM OR PART THEREOF FOR ANY OTHER PURPOSE THAN FOR WHICH IT IS SENT TO YOU.

33-114

REVISION	DATE	ALTERED T. RAMAR. CHECKED
A	090792	

SLEEVE DIMNS. ARE CHANGED FOR 2"-150# COMPACT DESIGN.

HARDEN AND TEMPER TO 62^{+1} HRc.

CHAMFER ALL SHARP EDGES.

3.2 / 0.8

TOLERANCE FOR UNTOLERANCED DIMENSIONS

UPTO 6 MM	= ±0.1 MM
> 6 UPTO 120 MM	= ±0.2 MM
MORE THAN 120 MM	= ±0.5 MM
ANGULAR TOLERANCE	= ±0.5 DEG
CHAMFER	= ±0.5 MM

34 g6	−0.007 / −0.020

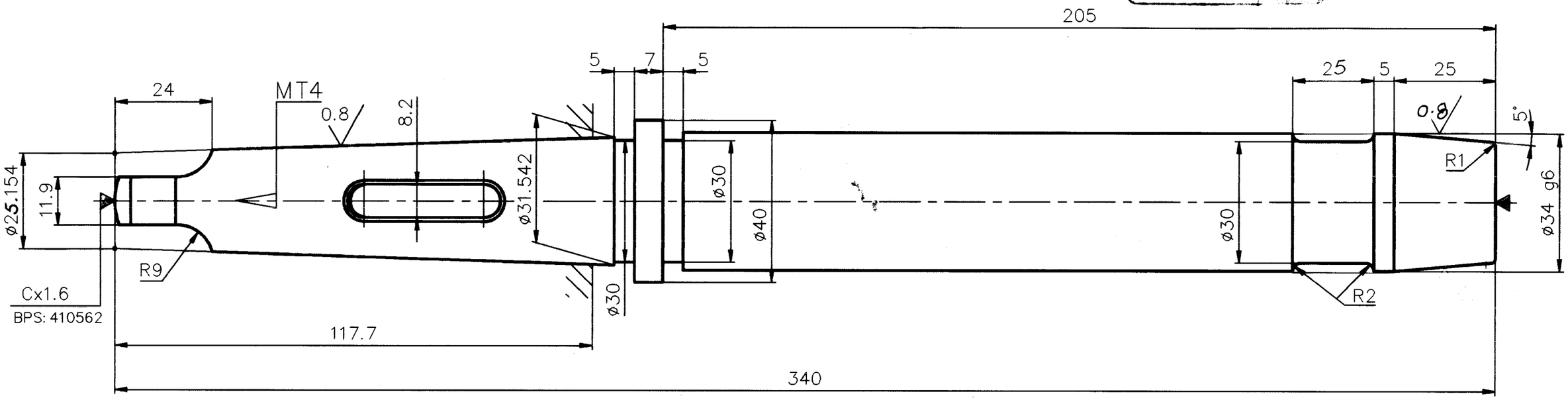

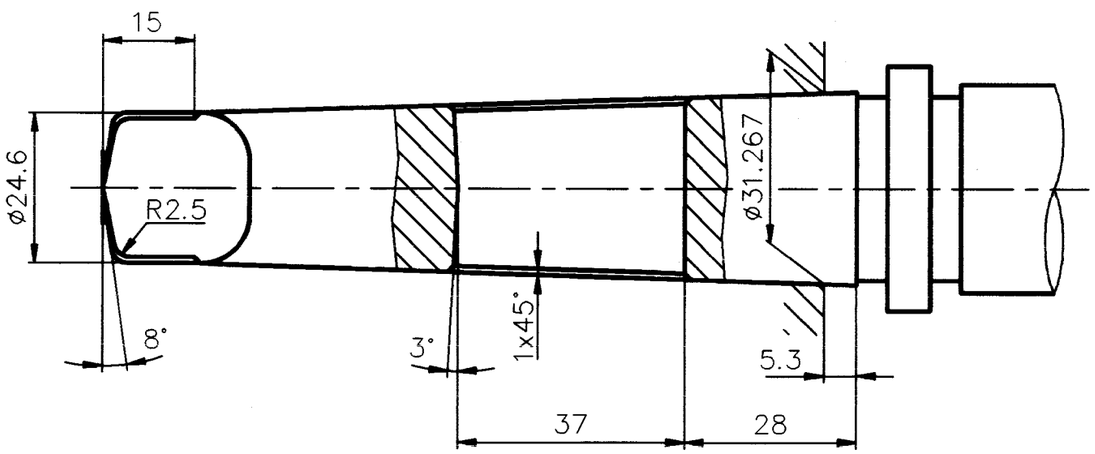

NO. OF PIECES	DESCRIPTION	SEM. PRO/SEQ. NO.	INT. MAT/SEQ. NO.	FINAL MATERIAL	SCRAP SORT	NET WT.(KG)	GROSS WT.(KG)	DRAWING NO	ITEM NO.
	ø40x340		IS:1570 T90	Mn2W50Cr45 CERT.		2.2		20.T.42.22232	1

COMP. DRG. NO.	1.V.1772.02554
COMP. DESC.	BODY 2"-150#
GROUP: OV	WC:

TOOL NO :- 42-54499-82

BHARAT HEAVY ELECTRICALS LTD.,

BOILER PLANT UNIL, TIRUCHIRAPALLI-14

FIRST ANGLE.	SCALE	DRAWN	K.SAIVAM.	TOTAL NET WT.KG	
	1:1	CHEKED		TYPE	
		APPROVED			REDRAWN
ALL DIMENSIONS IN MILLIMETRES.		DATE	12.10.95	NEW/OLD DRG NO.	

CAUTION

THE INFORMATION CONTAINED IN THIS DRAWING IS THE PROPERTY OF BHARAT HEAVY ELECTRICALS LTD BOILER PLANT UNIT,TIRUCHY-14 AND SHALL NOT BE USED WITHOUT THEIR EXPRESS WRITTEN PERMISSION IN ANY FORM OR PART THEREOF FOR ANY OTHER PURPOSE THAN FOR WHICH IT IS SENT TO YOU.

TITLE.

TAPER SPINDLE

TAPER SPINDLE

DRAWING NO. 30-T-42-31323

REVISION

A	DATE	ALTERED
ZONE		CHECKED

--- CASECARBURISE TO 0.8 mm DEPTH & HARDEN & TEMPER TO 55-58 HRC.

CHAMFER ALL SHARP EDGES.
PROTECT THREADS.

3.2 / 0.8

34 H7	+0.025 / 0.0

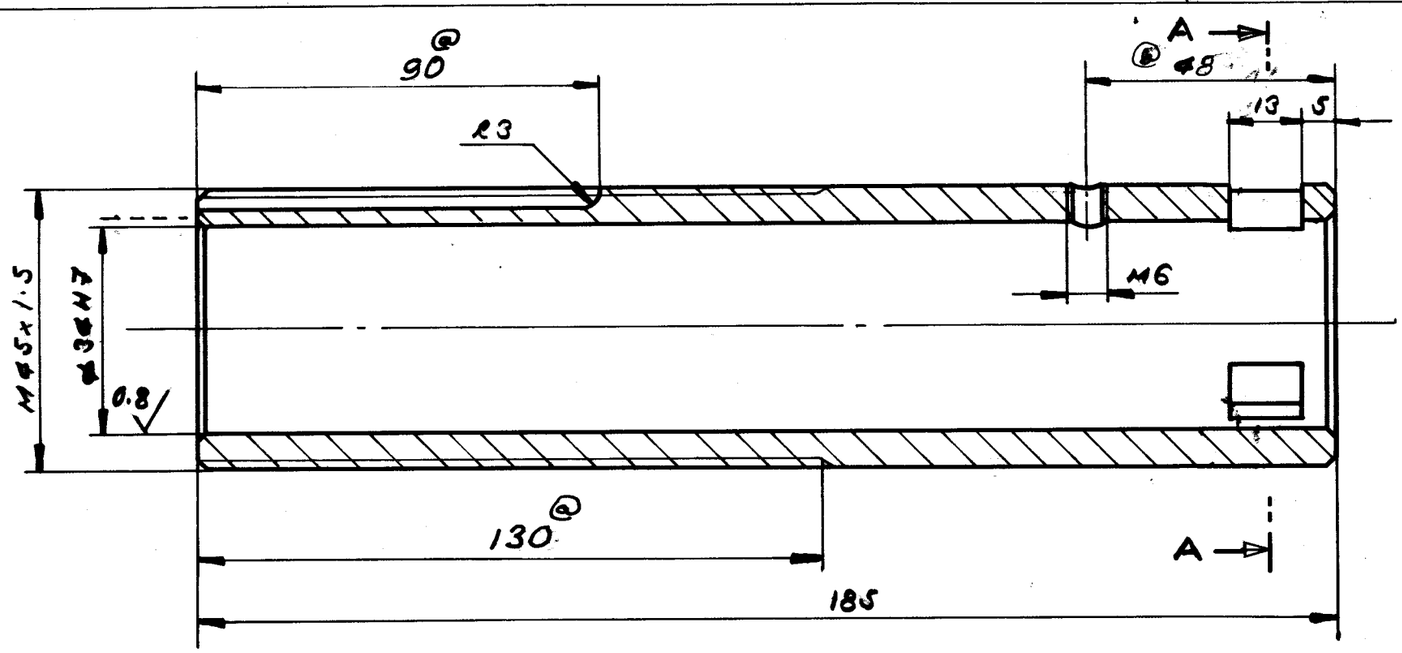

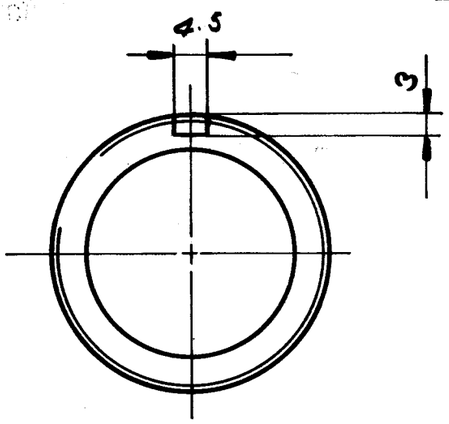

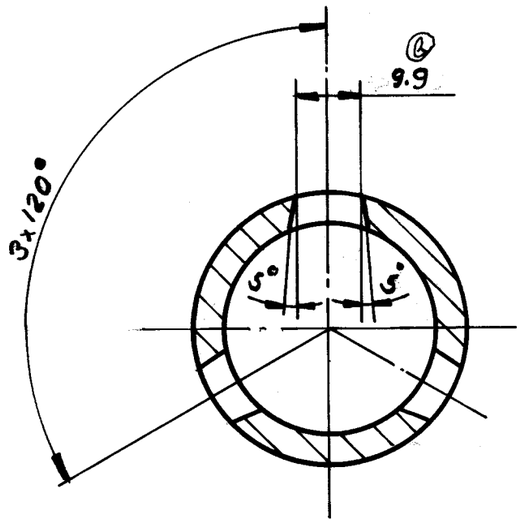

SECTION- AA

30.T.42. 22232

NO. OF PIECES	DESCRIPTION	SEM PRO./SEQ.NO.	INT. MAT. / SEQ. NO.	FINAL MATERIAL	SCRAP SORT	NET wt (kg)	GROSS (wt) kg	DRAWING NO.	ITEM NO
	φ45 x 185		IS:15701 3Ni3Cr80			1.0			6

TOOL No. 42.544499-83

BHARAT HEAVY ELECTRICALS LTD.,
BOILER PLANT UNIT, TIRUCHIRAPALLI-14

FIRST ANGLE	SCALE	DRAWN	T.RAMAR 060484	TOTAL NET wt. (kg)
	1:1	CHECKED		TYPE
		APPROVED		
ALL DIMENSIONS IN MILLIMETRES		DATE	060484	NEW/OLD DRG. NO.

TITLE: SLEEVE

DRAWING NO. 30.T.42.31324

REVISION B

CAUTION

THE INFORMATION CONTAINED IN THIS DRAWING IS THE PROPERTY OF BHARAT HEAVY ELECTRICALS LTD., BOILER PLANT UNIT, TIRUCHY-14 AND SHALL NOT BE USED WITHOUT THEIR EXPRESS WRITTEN PERMISSION IN ANY FORM OR PART THEREOF FOR ANY OTHER PURPOSE THAN FOR WHICH IT IS SENT TO YOU.

05-229

B	DATE 111195	ALT. T.RAMAR / CHD	A	DATE 090792	ALTERED T.RAMAR. / CHECKED
@	DIMN. 9.9 WAS 9.7 / DIMN. 48 WAS 40		ZONE @	DIMN. 90 & 130 ARE 65 & 100 FOR 2"- 150# COMPACT DESIGN.	

Annexure – I

Certificate by Chartered Accountant on letter head

This is to Certify that M/S ....., (hereinafter referred to as 'company') having its registered office at ..... is registered under MSMED Act 2006, (Entrepreneur Memorandum No (Part-11) ..... dtd:....., Category:..... (Micro/Small)). (Copy enclosed).

Further verified from the Books of Accounts that the investment of the company as per the latest audited financial year ..... as per MSMED Act 2006 is as follows:

1. **For Manufacturing Enterprises:** Investment in plant and machinery (i.e. original cost **excluding land and building and the items specified by the Ministry of Small Scale Industries vide its** notification No.S.0.1722(E) dated October 5, 2006 :
   Rs.....Lacs
2. **For Service Enterprises:** Investment in equipment (original cost excluding land and building and **furniture, fittings and other items not direCtly related to the service rendered or as may be notified under the MSMED** Act, 2006:
   Rs.....Lacs

(Strike off whichever is not applicable)

The above investment of Rs.....Lacs is within permissible limit of Rs.....Lacs for .....Micro / Small (Strike off which is not applicable) Category under MSMED Act 2006.

Or

The company has been graduated from its original category {Micro/ Small) (Strike off which is not applicable) and the date of graduation of such enterprise from its original category is ..... (dd/mm/yyyy) which is within the period of 3 years from the date of graduation of such enterprise from its original category as notified vide S.O. No.3322(E) dated 01.11.2013 published in the gazette notification dated 04.11.2013 by Ministry of MSME.

Date:

(Signature)

Name-

Membership number-

Seal of Chartered Accountant

Documents submitted with the offer shall be signed and stamped in each page by authorized representative of the bidder.

G1. INSTRUCTION TO BIDDER

Quotations shall be submitted before due date and time. Late offers are liable to be rejected, so please ensure to submit bid well within due date and time. Techno-commercial part will be opened on due date.

Based on evaluation of techno-commercial offers, Price bids of bidders who qualify from techno-commercial evaluation shall be opened. BHEL may decide to open the Price bid same day at 1700 hrs. If not opened on the same day, all qualifying bidders shall be notified for date of opening of Price bids by email/fax/post/courier/E-procurement system generated email.

G1.1 INSTRUCTION TO BIDDER (In case of Non-E-Procurement / Paper/ Manual/ Hard Copy based tenders)

Sealed Tenders can be dropped in the tender box labeled as 'Tender box for MM contracts'. This tender box is located at the entrance of Admin block BHEL Goindwal. Fax (01859-222061) / E-Mail (**tendermm_ivp@bhel.in**) offers received in time shall be considered only when such offers are complete in all respects. In case of bulky tender please handover quotation to Sh Rakesh Kumar/ SDGM/Head-MM or Sh Gurcharan Singh / AGM-Operations & MM. [Contact: 01859 224 615/631]. Bid can be send to following address:

BHEL, Industrial Valve Plant,
#433, Industrial Complex,
Goindwal Sahib, Distt. Tarn Taran,
Punjab-143422.

G1.2 INSTRUCTION TO BIDDER (In case of E-Procurement)

Interested bidders/Suppliers shall submit their offer through e-Procurement mode at https://bhel.abcprocure.com. **Offers in any other mode will not be accepted.**

For Enterprise Procurement System (EPS) Bidders/Suppliers are requested to follow these steps:

a. Requirements

1. Computer with good Internet Connection.
2. Operating System should be Windows Vista / Windows 7 and above.
3. Web Browsers: Internet Explorer 9.0 (32-bit Browser only) & above

b. Mandatory Requirements:

Suppliers interested for registration for BHEL Open Tenders should have a valid DSC (Digital Signature Certificate) before Proceeding forward for Registration. Herein a Valid DSC refers to a Class-II/III Digital Signature Certificate (DSC) for Signing & Encryption (Required both digital signature certificate: Signing & Encryption) of bids issued by any of the valid Certifying Authorities (approved by Controller of Certifying Authorities) in India. Valid Digital Signature Certificate (DSC) must be installed in a computer system from where you want to access the website.

For Unregistered Suppliers in EPS:

Procedure for Online Registration in EPS for Open Tender Suppliers for BHEL. Please follow the below steps for registration: -

1. Click Register Button (Top of the Screen).

2. Please input your organization PAN No (in case of Indian supplier) or select your "country" in case you are an overseas Supplier.
3. Select Units to participate in.
4. Fill up Company details.
4. Key in your desired login id If you have registered by keying in PAN No. then your desired login id will be prefixed by "OTI", In case of **overseas suppliers it will be also prefixed with "OTI"**.
5. Fill in the Captcha code & agree to the terms & conditions and privacy policy of this website and click SUBMIT.

Once the above steps are completed, contact to M/s eProcurement Technologies Limited for ID Activation. M/s e Procurement Technologies limited, Ahmedabad will activate your ID within 2 business hours. After registering, follow the steps provided in "For Registered Supplier" to view RFQ.

NB: - 1 BHEL Administrator or user will have no role for approving Registration and Open Tenders and DSC for any supplier who has registered himself from the front END which is in case of OT.

For Registered Supplier in EPS:

1. Supplier visits EPS home page
2. Supplier Login in with their user id and password
3. Search the RFQ ID and views it.
4. Attaches themselves to the RFQ by clicking the "I/We wish to participate".
5. Supplier fills the bid template and makes necessary attachments
6. Supplier submits their bid by clicking Sign, Encryption & Save button.

In any problem is faced by supplier while login/registration in EPS (**https://bhel.abcprocure.com**) and any other assistance, please contact the support team of M/s e Procurement Technologies limited, Ahmedabad as per details mentioned in table below: -

Name	Contact Nos.	e-mail ID	Role	Location
Mukunthan	+91 6353215001	Trichy.bhel@eptl.in	Support Executive	Trichy
Swapnil Hamilton	+91 7940270549	swapnil.h@eptl.in	Support Executive	HO – Ahmedabad
Hardik Oza	+91 7940270560	Hardik.oza@eptl.in	Support Executive	HO – Ahmedabad
Ankur Bhatt	+91 7940270590	ankur.bhatt@eptl.in	Support Executive	HO – Ahmedabad
Prashant Rajyaguru	+91 7940270545	prashant@eptl.in	Asst. Manager – Implementation & Support	HO – Ahmedabad
Dharam Rathod	+91 7940270596	dharam@eptl.in	Manager – Implementation & Support	HO – Ahmedabad
Pradip Parmar	+91 7940270532	pradip@eptl.in	Sr Mgr – Implementation & Support	HO – Ahmedabad
Devang Patel	+91 7940270576	devang@eptl.in	Sr Manager – Implementation & Support	HO – Ahmedabad

G2 OTHER IMPORTANT INFORMATION RELATED TO E-PROCUREMENT TENDERS

1. The bidder has to keep track of any changes by viewing the addendum / Corrigendum's issued by the Purchaser on time-to- time basis in the E-Procurement platform. The Company calling for tenders shall not be responsible for any claims/problems arising out of this.
2. The user should complete all the processes and steps required for bid submission. The successful bid submission can be ascertained once acknowledgement is given by the system through bid submission number after completing all the processes and steps. BHEL and M/s e Procurement Technologies limited will not be responsible for incomplete bid submission by users. Users may also note that the incomplete bids will not be saved by the system and are not available for the Purchaser for processing.
3. Before uploading scanned documents if any, the bidders shall sign on all the statements, documents, certificates uploaded by him, owning responsibility for their correctness / authenticity.
4. On the due date of tender opening, only technical bids will be opened. The opened technical bids will be evaluated by us and clarifications required, if any, will be called for from the bidders on technical and commercial points. If no reply is received from the vendor for the clarification raised by BHEL with in the final cut-off date, those vendors offer will be processed with the documents available / submitted against this tender. Offers not meeting the required specification and technical condition will be summarily rejected. The price bids of technically suitable bidders will be opened on a later date with prior intimation to techno-commercially suitable bidders.
5. Ranking L-1, L-2 etc. shall be done for individual item for the techno-commercially acceptable offers on landed cost to BHEL, IVP Goindwal basis and BHEL reserves the right to place order for individual items with different vendors. In the event of more than one vendor becoming L1 for the item, the enquiry quantity will be shared equally among all the L1 vendors.
6. BHEL reserves the right to negotiate with L1 vendor or re-float the tender for items where, **L1** price is not the lowest acceptable price; BHEL reserves the right to increase or decrease the tender quantity.
7. **If supplier is mentioning delivery destination within state/ outside state depending upon his location of factory, Free On Road etc these are assumed as on FOR Goindwal. If supplier is wishing to give delivery on Ex works basis, then he has to clearly mention about it.**

G3 PRICE BASIS

a. Order of enquiry item sl. No. shall be maintained in the quotation.
b. The rates quoted shall be firm and fixed. No price variation is proposed and allowed.
c. Rates quoted should be F.O.R Goindwal basis. If bidder has quoted Ex Works, loading shall be done as per BHEL discretion for tender evaluation.

Variation in GST or any other statutory levies during contractual delivery period shall be to BHEL's account

G4 VALIDITY OF OFFERS:

The offers shall be kept open for acceptance 'for number of days mentioned in special terms and conditions' from the date of opening of the tender. In case of extension of tender opening date, the validity shall be suitably revised.

G5 SCOPE OF SUPPLY

Material shall be supplied as per the applicable latest Technical Delivery Conditions (TDC)/ Material Standard requirements/BPS/Drawing and other requirement as given in the Tender

Enquiry. National & International material Standards shall have to be arranged by vendors themselves.

G6 REPLACEMENT OF REJECTION

If the material is rejected due to defective workmanship during inspection or at the time of actual use, within the guarantee period (i.e. as per clause 13), the rejected material shall be replaced by the supplier. Corresponding quantity shall be treated as unsupplied against respective purchase order till replacement is received at BHEL. If the material is found defective and rejected during use for which payment has already been released the rejected quantity shall be supplied free of cost by the vendor within a month of intimation of the rejection by BHEL.

Lifting of rejected material is under Supplier's scope. BHEL will inform related invoice, qty etc to supplier. Supplier is expected to give the plan to lift and advance intimation when visiting to lift the material. Material should be lifted within one month from date of intimation. After one month BHEL will not be responsible for rejected material. BHEL may decide to send the rejected material on to Pay basis to supplier. Any leniency/ unresponsiveness/delay on part of supplier may lead to appropriate action by BHEL. Any request to postpone in written may be considered but replacement should not be linked with lifting of material.

G7 SUPPLIED MATERIAL ADJUSTMENT

Item/s pending in previous PO has to be billed in previous PO only. Otherwise BHEL will be free to adjust the supplies in previous PO. Any implication of tax will be on supplier's account. For this it is desirable to reconcile the pending PO statement every month/frequently. BHEL will give pending PO statement every month. This can also be viewed at Portal (http://vis.bheltry.co.in/mm/index.jsp).

G8 DELIVERY SCHEDULE

Supplies shall be affected and completed as per schedule mentioned in special terms and conditions. **Further, BHEL may release delivery schedule from time to time based upon our requirement with mutual understanding.** Vendor shall be required to complete the order as per the BHEL schedule requested.

G9 ACCESS TO MANUFACTURING PREMISES:

While Purchase Orders placed on the vendor are under execution, authorized representatives of BHEL shall be allowed free access to the manufacturing facilities for the purpose of inspection or monitoring the progress of purchase orders. This access will also be extended to representatives of BHEL's customers accompanying the authorized representative/s of BHEL (which shall be intimated in advance), if our contractual requirements with our customers call for the same.

G10 TERMS OF PAYMENT:

a. Due payment against supplies received shall be due after 30 days of receipt and acceptance of material and shall be paid within next 15 days' period. In case of any deviation from standard payment term mentioned, BHEL at its discretion may load on the item price at "Base rate of SBI (as applicable on the date of bid opening; Techno-commercial bid opening) + 6% shall be considered for loading for the period of relaxation sought by bidders.
b. Documents to be submitted (if applicable)
    i. Tax invoice (Invoice shall be GST compliant and should contains all the required information such as GST No, HSN code etc.)
    ii. Transporter copy along with material/consignment.
    iii. Material Test Certificates (MTC) and
    iv. Compliance Certificate.
c. GST registration number is to be submitted by qualified vendor as per GST law.
d. It is mandatory to mention proper material codes in the invoices and separate invoices to be raised for different POs.

e. ***BHEL releases payment through EFT mode ONLY. Necessary details may please be submitted by filling required format before release of payment.***

f. ***Conditions relating to release of GST portion:***
Payment of GST portion will be released to vendor only upon completion of statutory requirement and further subject to following:
The reimbursement of GST portion of invoice shall be released only upon: -

1. vendor declaring such invoice in his GSTR-1 and
2. receipt of goods and Tax invoice by BHEL and
3. Confirmation of payment of GST thereon by vendor on GSTN portal.
4. Above is subject to receipt of goods/service and tax invoice thereof along with vendor declaring invoice in his return and paying GST within timeline prescribed for availing ITC by BHEL.

- In case GST credit is delayed/denied to BHEL due to non/delayed receipt of goods and/or tax invoice or expiry of timeline prescribed in GST law for availing such ITC, or any other reasons not attributable to BHEL, GST amount shall be recoverable from vendor along with interest levied / leviable on BHEL.

- In case vendor delays declaring such invoice in his return and GST credit availed by BHEL is denied or reversed subsequently as per GST law, GST amount paid by BHEL towards such ITC reversal as per GST law shall be recoverable from vendor/contractor alongwith interest levied / leviable on BHEL.

G11 AVAILING INPUT TAX CREDIT (ITC) BY BHEL:

1. Since ITC can be availed only when BHEL is in possession of GST Tax invoice and after receipt of goods. Thus, vendor to ensure timely dispatch of goods and Tax invoice. It may be noted that in case of any delay in receipt of Tax Invoice and/or receipt of goods, the ITC availment by BHEL will get delayed thus entailing additional cash outflow & may even get denied if ITC availment timelines are breached.

2. Further ITC can be availed only when vendor has declared such invoice in his outward supply Return GSTR-1 and after GST thereon has been paid by him at the time of filing of monthly Return.

3. If GST credit is delayed/denied to BHEL due to non/delayed receipt of goods and/or tax invoice or expiry of timeline prescribed in GST law for availing such ITC, or any other reasons not attributable to BHEL, GST amount shall be recoverable from vendor along with interest levied/leviable on BHEL.

4. Further, in case vendor delays declaring such invoice in his return and GST credit availed by BHEL is denied or reversed subsequently as per GST law, GST amount paid by BHEL towards such ITC reversal as per GST law shall be recoverable from vendor/contractor along with interest levied/leviable on BHEL.

G12 LIABILITY UNDER REVERSE CHARGE (RCM)

Any GST liability arising on BHEL under Reverse Charge (RCM) before actual receipt of goods and/ or Invoice thereof would be subject to recovery of Interest leviable for the period between the date of such liability and actual date of eligibility of ITC based on receipt of goods, receipt of Invoices and other conditions specified in GST Law as applicable.

G13 INSPECTION

a. All required tests as called in referred material standard/BHEL/TDC/drawing etc shall be carried out by vendor at no extra cost. **BHEL may decide to inspect itself/arrange third party at vendors' works itself as and when necessary with prior intimation to the vendor.** No additional charges shall be claimed for such inspections.
b. Third party inspection charges will be borne by BHEL. Moreover, all required infrastructure (testing, tools etc) have to be arranged by supplier.
c. **Vendor will give inspection call sufficiently in advance considering the delivery period stipulated in the purchase order.**
d. Material Test Certificates (MTC), Inspection reports and Compliance/Guarantee Certificate are to be provided along with the supplies.
e. Latest applicable revisions of standards/procedures to be referred. International/National standards are to be arranged by vendor.
f. Any inspection carried out before supply by vendor/incoming stage at BHEL notwithstanding, if any defect/non-conformity is noted during processing, the same shall be attended/replaced by vendor at no extra cost.
g. Necessary tooling including thread gauges etc. have to be arranged by vendor. Only in exceptional cases, based on BHEL discretions item/nature, BHEL may consider request to provide gauges if available with BHEL. But in no case this shall be linked with delivery of material.
h. BHEL representative from unit or CQ is authorized to carry out audits along with TPIA at vendor's works before clearing the items for dispatch.

G14 PREFERENCES FOR MSE's

Preferences as mentioned in "Public Procurement Policy for Micro and Small Enterprises (MSEs) Order, 2012" & "Public Procurement Policy for Micro and Small Enterprises (MSEs) Amendment Order, 2018", shall be given to Micro and Small enterprises.

Main points which are mentioned in the above orders are as follows:

- 25% Procurement of the tender value shall be made from MSE (Micro, Small Enterprises) firms.
- 25% of the 25% quantity (i.e. 6.25% of the tender quantity) offered to the MSE's shall be reserved for MSE's owned by SC/STs. Failure to participate by any MSE owned by SC/ST's; this 6.25% quantity shall be procured from other MSEs.
- 3% from within the 25% quantity offered to the MSE's shall be reserved for women owned MSE's. Failure to participate by any MSE owned by women; this 3% quantity shall be procured from other MSEs.
- EMD shall be exempted for MSE's. All these benefits are subject to production of all statutory documents
- In tender, participating Micro and Small Enterprises quoting price within price band of L1+15 per cent shall also be allowed to supply a portion of requirement by bringing down their price to L1 price in a situation where L1 price is from someone other than a Micro and Small Enterprise and

such Micro and Small Enterprise shall be allowed to supply up to 25 per cent of total tendered value. In case of more than one such Micro and Small Enterprise, the supply shall be shared proportionately (to tendered quantity).

"MSE suppliers can avail the intended benefits only if they submit along with the offer UAM (Udyog Aadhaar Memorandum), attested copies of either EM II certificate having deemed validity (five years from the date of issue of acknowledgement in EM II) or valid NSIC certificate or EM II certificate along with attested copy of a CA certificate (Format enclosed at Annexure -1 where deemed validity of EM II certificate of five years has expired) applicable for the relevant financial year (latest audited). Date to be reckoned for determining the deemed validity will be the date of bid opening (Part 1 in case of two part bid). Non submission of such documents will lead to consideration of their bid at par with other bidders. No benefit shall be applicable for this enquiry if any deficiency in the above required documents is not submitted before price bid opening. If the tender is to be submitted through e-procurement portal, then the above required documents are to be uploaded on the portal. Documents should be notarized or attested by a Gazetted officer.

G15 GUARANTEE/WARRANTEE

Vendor shall give a guarantee of 18 months from the date of dispatch or 12 months from date of receipt, against manufacturing defects, whichever is earlier. In case of non-acceptance of this term bid will be rejected.

G16 PENALTY FOR LATE DELIVERY

'Time is the essence of the contract'. As such, delivery of goods specified in the Purchase Orders released under the scope of this contract shall be made within the time limit prescribed therein. Penalty for late delivery will be applicable @ 0.5% per week or part thereof subject to a maximum of 10.0 %.

If any vendor does not accept LD **½% of the supply for each week of delay subject to a maximum of 5%,** their offer is likely to be rejected by BHEL and the price bid shall not be opened. Bidders accepting for 10% LD shall not be loaded on account of LD. However, bidders who offer any other % LD [between 5% to 10%] shall be loaded @ % deviation from 10% and their accepted %. e.g. If a bidder accepts for a max of 7% LD only, their offer would be loaded @ 3% (10 – 7 = 3).

BHEL reserves the right to receive or not receive the material after the due date of PO. Applicable GST shall also be recovered from suppliers/contractors on LD amount. For this Debit note will be issued by BHEL indicating the respective supply invoice number.

G17 RISK PURCHASE

BHEL shall be entitled to terminate the contract/pending POs at any stage and to purchase elsewhere at the risk and cost of the vendor, either the whole of the goods or any part thereof which the supplier has failed to deliver or dispatch within the time stipulated as aforesaid. Vendor shall be liable for the losses, which BHEL may sustain by way of such risk purchase.

G18 SUB-CONTRACT

The purchase order or any part thereof shall not be sub-contracted, assigned or otherwise transferred without previously obtaining the BHEL's consent in writing.

G19 FORCE MAJEURE

If at any time during the continuance of the contract, the performance in which or in any part by either party of any obligations under the contract are prevented or delayed by reason of any war, hostilities, acts of public enemy, civil commotion, sabotage, fires, explosions, epidemics, quarantine restrictions, or acts of God (hereinafter referred to "an events" then provided the notice of happening of any such event is given by either party to the other within 21 days of the occurrence thereof, neither party shall by reason of such event be entitled to terminate the contract nor shall either party have any claim for damages against the other in respect of such non-performance and delay in performance and delivery under the contract shall be resumed as soon as practicable after such event has come to an end or ceased to exist. If the performance in whole or part of any obligation under the contract is prevented or delayed by reason of any such event, claims of extension of time shall be granted for periods considered reasonable by BHEL subject to prior notification by the vendor to BHEL of the particulars of the event and supply to BHEL, if required, of any supporting evidence. Any waiver of time in respect of partial installment shall not be deemed a waiver of time in respect of remaining deliveries.

G20 DISPUTES

In the event of any dispute and/or difference arising between the Vendor and BHEL as to interpretation and/or execution of the contract and/or the respective rights and liabilities of the parties, such disputes and/or differences shall be referred to the sole arbitrator nominated by BHEL. The provisions of the Indian Arbitration Act and the rules there under shall apply to such arbitration. The award passed by the arbitrator shall be final and conclusively binding on all the parties.

G21 JURISDICTION

The court of the place from where the purchase order is issued during the contractual period shall alone have jurisdiction to decide any dispute arising out of or in connection with the purchase order.

G22 CLARIFICATIONS

The correspondence exchanged against the tender from both tenderer and BHEL through email/e-procurement are considered as valid document legally though it is not signed. It is treated as valid confirmations made on behalf of the respective company and very much comes under the legal ambit of the business transaction and hence it is binding on both the parties to the business. Any transaction pertaining to the tender from both the parties of business done round the clock irrespective of the office or business hours of the companies, are valid legally and binding on both the parties. This applies to the extent only in such cases where deadline time for transaction is not specifically declared by either or both the parties to the business.

G23 LOI (Letter of Intent)

BHEL may issue LOI prior to the PO for any reason whatsoever. The LOI in such cases is to be treated as PO for all practical purposes and all the Terms & Conditions of the tender shall be applicable from the date of issue of LOI.

G24 WORDS AND FIGURES

a. If, in the price structure quoted for the required goods/ services/ works, there is discrepancy between the unit price and the total price (which is obtained by multiplying the unit price by the quantity}, the unit price shall prevail and the total price corrected accordingly, unless in the opinion of the purchaser there is an obvious misplacement of the decimal point in the unit price, in which case the total price as quoted shall govern and the unit price corrected accordingly.
b. If there is an error in a total corresponding to the addition or subtraction of subtotals, the subtotals shall prevail and the total shall be corrected; and
c. If there is a discrepancy between words and figures, the amount in words shall prevail, unless the amount expressed in words is related to an arithmetic error, in which case the amount in figures shall prevail subject of (a) and (b) above.
d. If there is such discrepancy in an offer, the same shall be conveyed to the bidder with target date upto which the bidder has to send his acceptance on the above lines and if the bidder does not agree to the decision of the purchaser, the bid is liable to be ignored.
e. Bids should be free from correction, overwriting, using corrective fluid, etc. Any interlineation, cutting, erasure or overwriting shall be valid only if they are attested under full signature(s) of person(s) signing the bid else shall be liable for rejection.
f. All overwriting/cutting, etc will be numbered by bid opening officials and announced during bid opening.

G25 GENERAL

a. BHEL will not be bound by any power of attorney granted by the vendors or by changes in the composition of the firm made subsequent to the execution of the contract. They may, however, recognize such power of attorney and changes after obtaining proper legal advice, the cost of which will be chargeable to the vendor concerned.
b. BHEL reserves the right to extend the due date of opening, which shall be informed. Validity of offer shall be deemed to be revised accordingly.
c. BHEL reserves the right to accept or reject any part or whole of the tender of a bidder by assigning a valid reason thereof. BHEL reserves the right to cancel the tender without assigning any reason thereof and without any obligation before any commitment.
d. If possible, please submit soft copy of price quotation [copied on a blank CD of standard make] put in the sealed offer.
e. Acceptance of all terms and conditions, in the form of signed copy of T&C or confirmation separately written, shall be submitted along with quotation. If nothing is mentioned, it shall be concluded that terms and conditions are acceptable.
f. BHEL may increase/decrease item/s based on BHEL requirement before price bid opening. Suitable price implication may be asked from suppliers.
g. BHEL may drop item/items from tender at any stage of tender before placing PO. BHEL may also delete PO with consent with supplier within delivery date of PO.
h. After releasing PO, it is assumed that supplier has accepted PO if we do not receive acknowledgement from supplier within 5 days of date of PO.
i. Any term is special tender terms and conditions will supersede the GCC.
j. BHEL reserves the right to negotiate with L1 bidder/s.

G26 BANNED FIRMS

The offers of the bidders who are on the banned list as also the offer of the bidders, who engage in the services of the banned firms, shall be rejected. The list of banned firms is available on BHEL website www.bhel.com.

G27 DISCLAIMER CLAUSE: (Only for E procurement)

Neither the Organization (Bharat Heavy Electricals Ltd.) nor the service provider (M/s e Procurement Technologies limited) is responsible for any failure of submission of bids due to failure of internet or other connectivity problems or reasons thereof.

G28 FRAUD PREVENTION POLICY

The Bidder along with its associate / collaborators / sub-contractors / sub-vendors / consultants / service providers shall strictly adhere to BHEL Fraud Prevention Policy displayed on BHEL website http://www.bhel.com and shall immediately bring to the notice of BHEL management about any fraud or suspected fraud as soon as it comes to their notice.

G29 REVERSE AUCTION

BHEL reserves the right to go for Reverse Auction (RA) (Guidelines as available on www.bhel.com) instead of opening the sealed envelope price bid, submitted by the bidder. This will be decided after techno-commercial evaluation. Bidders to give their acceptance with the offer for participation in RA. Non-acceptance to participate in RA may result in non-consideration of their bids, in case BHEL decides to go for RA.

Those bidders who have given their acceptance to participate in Reverse Auction will have to necessarily submit 'Process compliance form' (to the designated service provider) as well as 'Online sealed bid' in the Reverse Auction. Non-submission of 'Process compliance form' or 'Online sealed bid' by the agreed bidder(s) will be considered as tampering of the tender process and will invite action by BHEL as per extant guidelines for suspension of business dealings with suppliers/ contractors (as available on www.bhel.com).

The bidders have to necessarily submit online sealed bid less than or equal to their envelope sealed price bid already submitted to BHEL along with the offer. The envelope sealed price bid of successful L1 bidder in RA, if conducted, shall also be opened after RA and the order will be placed on lower of the two bids (RA closing price & envelope sealed price) thus obtained. The bidder having submitted this offer specifically agrees to this condition and undertakes to execute the contract on thus awarded rates.
If it is found that L1 bidder has quoted higher in online sealed bid in comparison to envelope sealed bid for any item(s), the bidder will be issued a warning letter to this effect. However, if the same bidder again defaults on this count in any subsequent tender in the unit, it will be considered as fraud and will invite action by BHEL as per extant guidelines for suspension of business dealings with suppliers/ contractors (as available on www.bhel.com).

G30 SUSPENSION OF BUSINESS DEALINGS WITH DEFAULTERS

The offers of the bidders who are under suspension as also the offers of the bidders, who engage the services of the banned firms, shall be rejected. The list of banned firms is available on BHEL web site **www.bhel.com.**

1.0 Integrity commitment, performance of the contract and punitive action thereof:

1.1. Commitment by BHEL:

BHEL commits to take all measures necessary to prevent corruption in connection with the tender process and execution of the contract. BHEL will during the tender process treat all Bidder(s) in a transparent and fair manner, and with equity.

1.2. Commitment by Bidder/ Supplier/ Contractor:

1.2.1. The bidder/ supplier/ contractor commit to take all measures to prevent corruption and will not directly or indirectly influence any decision or benefit which he is not legally entitled to nor will act or omit in any manner which tantamount to an offence punishable under any provision of the Indian Penal Code, 1860 or any other law in force in India.

1.2.2. The bidder/ supplier/ contractor will, when presenting his bid, disclose any and all payments he has made, and is committed to or intends to make to agents, brokers or any other intermediaries in connection with the award of the contract and shall adhere to relevant guidelines issued from time to time by Govt. of India/ BHEL.
1.2.3. The bidder/ supplier/ contractor will perform/ execute the contract as per the contract terms & conditions and will not default without any reasonable cause, which causes loss of business/ money/ reputation, to BHEL.

If any bidder/ supplier/ contractor during pre-tendering/ tendering/ post tendering/ award/ execution/ post-execution stage indulges in mal-practices, cheating, bribery, fraud or and other misconduct or formation of cartel so as to influence the bidding process or influence the price or acts or omits in any manner which tantamount to an offence punishable under any provision of the Indian Penal Code, 1860 or any other law in force in India, then, action may be taken against such bidder/ supplier/ contractor as per extant guidelines of the company available on www. bhel.com and/or under applicable legal provisions

G31 PREFERENCE TO MAKE IN INDIA

For this procurement, Public Procurement (Preference to Make in India), Order 2017 dated 15.06.2017, 28.05.2018 & 29.05.2019 and subsequent Orders issued by the respective Nodal Ministry shall be applicable even if issued after issue of this NIT before finalization of contract/PO/WO against this NIT.

In the event of any Nodal Ministry prescribing higher or lower percentage of purchase preference and / or local content in respect of this procurement, same shall be applicable.