| | |
|---|---|
| **Tender Enquiry No** | 1920-092E |
| **Enquiry date** | 05.11.2019 |
| **Last time and date of tender submission** | 15:00 Hrs 19.11.2019 |
| **Tender opening time and date** | 15.30 Hrs 19.11.2019 |
| **Quotation Parts** | *Two-part* |
| **Item Description** | *GASKETS* |
| **Delivery schedule (In days)** | As per tender term S5 |
| **Validity of offer (In days)** | *90 days from tender opening date* |
| **Validity of Rate Contract** | *Till 30.10.2020 (refer clause S3)* |
| **Counter Offer** | As per tender term S4 |
| **Quantity Variation** | *+/-10%* may be acceptable with prior consent of BHEL in writing |
| Documents required along with supply of material | |
| **Test Certificate and other Quality related documents** | *Required as per BPS/IS /TDCs/Drawings mentioned in Annexure-II* |

## Pre Qualification terms

Bidders should primarily be engaged in manufacturing of similar gaskets (Spiral wound gaskets with grafoil filler). BHEL may carry out evaluation of bidder's capability. BHEL reserves the right to accept / reject any offer based on evaluation of bidder's capability. For verification of data presented for pre-qualification bid, BHEL may decide to visit the bidder(s) works. Any fact found deviating from bids during evaluation shall make the bidder liable to be dis-qualified. **"Bidder has to present one or more purchase orders of any party of similar gaskets (Spiral wound gaskets with grafoil filler) with minimum cumulative value of Rs. 5,00,000.00 (five Lakh Only) as proof. PO date should be 01.11.2016 or afterwards". This Pre-Qualification terms shall not be applicable to Start-Up Firms. These relaxations and exemptions are in line with D.O. No. 5(4)/2016-BE-I dated 15.02.2017. For claiming Start-Up exemption, bidders have to give documentary evidence or undertaking. For Claiming MSE benefits, bidder have to give documentary evidence like NSIC, UAN, etc. Bidder has to give undertaking that he is manufacturer of similar gaskets.**

## Special terms and conditions:

### S1. INVITING TENDERS:

Online bids in two parts are invited for the supply of **Gaskets**. The relevant documents can be downloaded from from https://bhel.abcprocure.com. [Go for 'Advanced Search' >> Organization: Trichy, BHEL >> Enquiry No. 1920-092E].

### S2 SCOPE OF SUPPLY:

Material shall be supplied as per the applicable latest Technical Delivery Conditions (TDC)/ Material Standard requirements/BPS/Drawing and other requirement as given in the Purchase Order. National & International material Standards shall have to be arranged by bidders themselves. **Comparison and procurement shall be done for Individual item, i.e. Gaskets where one bidder is found to L1, then for individual quantity PO will be released and bidders have to execute the order what so ever be the quantity and PO value.**

Please note that the material will come after third party inspection only and third party inspection charges will be borne by BHEL. In case of spiral wound gaskets, the compression test mentioned in document ***VL_STDC_022_00*** is an important test during third party inspection.

## S3. VALIDITY OF OFFERS AND CONTRACT:

The offers shall be kept open for ***90 days*** from the date of opening of the tender. In case of extension of tender opening date, the validity shall be suitably revised.

This rate contract will be applicable up to ***31.10.2020*** and may vary three months from this rate contract period. However, BHEL reserves the right to terminate the contract earlier also if the performance of the BIDDER is not satisfactory. The rate contract can be again extended for one more year on mutual agreement. BHEL reserves the right to short close rate contract earlier. All Purchase orders will be released in this rate contract period only. **Items indicated in annexure are tentative which may increase or decrease during the contract time. Supplier has to supply material as per PO/TDC/Drawings. During rate contract period BHEL may not release PO for all items indicated in annexure. Supplier may supply +/- 10% of ordered quantity with the prior approval of BHEL**.

## S4. Loading Criteria cum Counter offer

# Case-A

**BHEL will give counter-offer to bidders other than L1 as per provisions of CASE-A, in order to have broader bidders base for ensuring timely delivery for the items where the quantity is more than or equal to 500 nos. Following directions shall be followed when allotting the tender quantities.**

1. Tender quantity shall be divided in the proportion 60:15:25 (60% for L1, 15% for L2 and 25% for MSE's) in case the L1 bidder is not a MSE subject to following conditions:
   a) L2 acceptance of L1 rates.
   b) In tender, participating Micro and Small Enterprises quoting price within price band of L1+15 per cent shall also be offered 25% quantity of tender quantity at L1 price in a situation where L1 price is from someone other than a Micro and Small Enterprise. In case of more than one such Micro and Small Enterprise, the supply shall be shared equally. If there are more than one MSE in the price band of L1+ 15% to whom the offer has been sent and some of them reject the offer, then the remaining quantity shall be distributed equally to the MSEs accepting L1 prices.

c) 25% from the 25% quantity (i.e. 6.25% of the tender quantity) offered to the MSE's shall be reserved for MSE's owned by SC/STs. In event of failure of such Micro and Small Enterprises to participate in tender process or meet tender requirements and L1 price, 6.25 per cent quantity for Micro and Small Enterprises owned by SC/ST entrepreneurs shall be met from other Micro and Small Enterprises. 3% from within the 25% quantity offered to the MSE's will be offered to women owned MSE's. Failure to participate by any MSE owned by women; this 3% quantity shall be offered to other MSEs.
d) In case any MSE bidder does not accept the counter offer, the above mentioned 25% quantity shall be offered to L2.
e) If there is no MSE in the Price band of L1+15% then the 25% quantity shall be offered to L2 bidder.
f) If other suppliers (other than L1) are not under MSE then 60% qty shall be given to L1 and 40% qty shall be offered to L2 supplier.

2. In case if the L1 bidder is MSE then quantity shall be provided as 60 % for L1, 30.75% for L2 and 6.25% tender quantity shall be offered to the MSEs owned by SC/ST's in the price band of L1+15%. In event of failure of such Micro and Small Enterprises to participate in tender process or meet tender requirements and L1 price, 3% quantity offered to women owned MSE's. Failure to participate by any MSE owned by women; this 3% quantity shall be met from L2 bidder.

3. In case L1 bidder is MSE owned by SC/ST Women entrepreneur then quantity shall be provided as 60 % to L1 and 40% to L2.

All above offered qty are subject to acceptance of L1 rates. In case of non- acceptance of counter offer by any bidder after above applicable provisions the whole quantity shall be given to L1 bidder. This ratio can be altered in case of any failure on part of L1 regarding delivery commitment /quantity /quality of material. All above mentioned preferences shall be given to MSEs and SC/STs only on the submission of documentary evidence.

**BHEL will not give counter offer to highest bidder in any case (except MSE bidders whose rates falling in the range of L1 +15%).The rate acceptance will be taken from all suppliers except highest bidder. Price acceptance will be taken from suppliers other than L1 & highest bidder and if any bidder failed to supply then those items can be procured from bidders who accepted the L1 rates.**

If there are more than one L1 bidders, quantity shall be equally divided, except MSE portion

## CASE-B

BHEL will not give counter offer for the items where RC quantity < 500 no's except MSE clause mentioned in G14 of GCC. Price acceptance will be taken from suppliers other than L1 & highest bidder and if any bidder failed to supply then those items can be procured from bidders who accepted the L1 rates.

## S5. DELIVERY SCHEDULE:

50% of the ordered quantity within 9 weeks from the date of Purchase Order and Balance 50% within 12 weeks from the date of Purchase Order which will be released from time to time as per BHEL requirement. The above quantity is for single item not for the total tender qty.If supplier fails to supply items within PO delivery date, BHEL reserves the right to cancel the PO and this shall be procured from other suppliers. Further, BHEL may release delivery schedule from time to time based upon our requirement. Bidder shall be required to complete the order as per the BHEL schedule requested.

## S6. IMPORTANT GUIDELINES:

1. Documents submitted with the offer shall be signed and stamped in each page by authorised representative of the bidder.
2. On the due date of tender opening, only technical bids will be opened. The opened technical bids will be evaluated by us and clarifications required, if any, will be called for from the bidders on technical and commercial points. If no reply is received from the bidder for the clarification raised by BHEL with in the final cut-off date those bidders offer will be processed with the documents available / submitted against this tender. Offers not meeting the required specification and technical condition will be summarily rejected. The price bids of technically suitable bidders will be opened on a later date with prior intimation to techno-commercially suitable bidders. All qualifying bidders shall be notified for date of opening of Price bids by email/fax/post/courier. If any difference is found in the terms in the Techno-commercial bid and price bid, the terms mentioned in the Techno-Commercial Bid will be considered.
3. BHEL reserves the right to negotiate with L1 bidder or re-float the tender for items where, L1 price is not the lowest acceptable price; BHEL reserves the right to increase or decrease the tender quantity.
4. The contract shall be in force up to 31.10.2020 from the date of this agreement and may be extended for further period on mutual acceptance.
5. The Price stipulated will be ON FOR BHEL GOINDWAL stores and FIRM and no revision will be entertained for the complete duration of the Contract i.e. up to 31.10.2020 from the date of this Rate Contract.
6. The quantities indicated in the Enquiry are approximate and tentative. **BHEL does not guarantee to place purchase order for the full quantity.**
7. There is no minimum quantity for placement of purchase orders under the Rate Contract.
8. BHEL Reserves the right to short close or reduce the quantity mentioned in the Enquiry / PO.
9. Any other condition which might have been quoted by the supplier and or in contravention to the terms prescribed in the Enquiry that have not been specifically accepted in writing by the purchaser will not be applicable to this Frame work agreement.
10. Conditional offers are likely to be rejected.
11. In case of failure in supplying the items as per tender terms and conditions within the delivery period, BHEL reserves the right to short close the PO and share the Pending quantity among other bidders as per Clause S4 of the tender terms and conditions. Also such failed bidders will be removed from Rate Contract of this Enquiry and their share quantity will be distributed equally among other qualified bidders as per the split up ratio.
12. In case the bidder withdraws the offer submitted by him/her after it is accepted by BHEL and fails to supply the goods as per the terms and conditions of the contract, or at any time repudiate the contract wholly or in part, BHEL shall be at liberty to cancel the purchase order and to recover from the bidder the extra cost and the other loss incidental to the breach of contract on the part of the bidder.

13. All test certificates are required before /with the material at BHEL Goindwal; Otherwise BHEL may or may not receive the material. Test certificates may be send on email as mentioned on Purchase orders in scanned form. In no case material will be accepted at BHEL without test certificates.

# LIST OF ITEMS

| Sl. Nos. | Material | Material Description | DRG No/Rev No | TDC No/ Rev No | Tender quantity in Nos. |
|---|---|---|---|---|---|
| 1 | 964656220000 | GASKET-SW-18 C150 FV | 3VZ08595816/01 | VL:STDC:022/00 | 50 |
| 2 | 964654860000 | GASKET-SW-GRP-OD556.3XID524.3X | 3VNH5195989/00 | VL:STDC:022/00 | 100 |
| 3 | 964654060000 | GASKET-SW-GRP-OD410XID382X4.5T | 3VP56095989/00 | VL:STDC:022/00 | 100 |
| 4 | 964652690000 | GASKET-SW-GRP-OD692.5XID649.5X | 3VNE9695989/00 | VL:STDC:022/00 | 50 |
| 5 | 964652660000 | GASKET-SW-GRP-OD316XID296.5X4. | 3VP48095989/00 | VL:STDC:022/00 | 300 |
| 6 | 964652560000 | GASKET-SW-2,3C150/300FV | 3V519924458/00 | VL:STDC:022/00 | 200 |
| 7 | 964652370000 | GASKET-SW-8C150GV,4C150FV-CF | 3VA89524458/00 | VL:STDC:022/00 | 100 |
| 8 | 964652360000 | GASKET-SW-6C150FV/GV-CF | 3VA89424458/00 | VL:STDC:022/00 | 200 |
| 9 | 964651980000 | GASKET-SW-GRP-OD346XID324X4.5T | 3VNC3024169/00 | VL:STDC:022/00 | 400 |
| 10 | 964651960000 | GASKET-SW-GRP-OD399XID376X4.5T | 3VNC4024169/00 | VL:STDC:022/00 | 400 |
| 11 | 964651820000 | GASKET-SW-GRP-OD283XID265X4.5T | 3VNC3824169/00 | VL:STDC:022/00 | 500 |
| 12 | 964651320000 | GASKET-SW-GRP-OD620XID580X4.5T | 3VN59595989/00 | VL:STDC:022/00 | 50 |
| 13 | 964651310000 | GASKET-SW-GRP-OD517XID476X4.5T | 3VN96495989/00 | VL:STDC:022/00 | 300 |
| 14 | 964651260000 | GASKET-SW-GRP-OD368XID336X4.5T | 3VF50695989/00 | VL:STDC:022/00 | 200 |
| 15 | 964651240000 | GASKET-SW-GRP-OD258XID238X4.5T | 3VF50495989/00 | VL:STDC:022/00 | 200 |
| 16 | 964651210000 | GASKET-SW-GRP-OD159XID147X3.2T | 3V247995989/00 | VL:STDC:022/00 | 500 |
| 17 | 964650630000 | GASKET-SW-GRP-OD426XID402X4.5T | 3VU08595816/01 | VL:STDC:022/00 | 200 |
| 18 | 964564150000 | GASKET-SW-GRP-OD122XID110X3.2T | 3V247895046/01 | VL:STDC:022/00 | 1000 |
| 19 | 964564120000 | GASKET-SW-GRP-OD168.5XID152X3. | 3V515395046/01 | VL:STDC:022/00 | 300 |
| 20 | 964563050000 | GASKET-SW-GRP-OD168.5XID154X4. | 3VN04995046/03 | VL:STDC:022/00 | 300 |
| 21 | 964562580000 | GASKET-SW-GRP-OD119XID109X4.5T | 3VN08195046/04 | VL:STDC:022/00 | 200 |
| 22 | 963534250000 | GASKET-SW-GRP-OD95XID79X4.5T-C | 42000102256/01 | VL:STDC:022/00 | 1200 |
| 23 | 964651200000 | GASKET-SW-GRP-OD102.5XID90X3.2 | 3V247795989/00 | VL:STDC:022/00 | 200 |
| 24 | 964562540000 | GASKET-SW-GRP-OD189XID171X4.5T | 3VN09795046/04 | VL:STDC:022/00 | 600 |
| 25 | 964562570000 | GASKET-SW-GRP-OD372XID345X4.5T | 3VN06595046/04 | VL:STDC:022/00 | 200 |
| 26 | 964651180000 | GASKET-SW-GRP-OD138XID120X4.5T | 3VB00195989/00 | VL:STDC:022/00 | 200 |
| 27 | 964659000000 | GASKET-SW-GRP-OD860XID810X4.5T | 3VNK4495989/00 | VL:STDC:022/00 | 50 |
| 28 | 964657920000 | GASKET-SW-GRP-OD221XID195X4.5T | 3VP34024169/00 | VL:STDC:022/00 | 200 |
| 29 | 964563040000 | GASKET-SW-GRP-OD439XID411X4.5T | 3VN10595046/03 | VL:STDC:022/00 | 100 |
| 30 | 964562560000 | GASKET-SW-GRP-OD305XID284X4.5T | 3VN10595046/03 | VL:STDC:022/00 | 100 |
| 31 | 964563650000 | GASKET-SW-GRP-OD295XID275X3.2T | 3VN10595046/03 | VL:STDC:022/00 | 100 |
| 32 | 964562550000 | GASKET-SW-GRP-OD242XID222X4.5T | 3VN10595046/03 | VL:STDC:022/00 | 200 |
| 33 | 964651460000 | GASKET-SW-GRP-8"C150-GV-NC08 | 3VNC0824014/00 | VL:STDC:022/00 | 500 |

| | | | | | |
|---|---|---|---|---|---|
| 34 | 964651450000 | GASKET-SW-GRP-12"C150-GV-NC12 | 3VNC1223999/00 | VL:STDC:022/00 | 150 |
| 35 | 964562070000 | GASKET-SW-GRP-2"-C150-GV-N073 | 3VN07395038/03 | VL:STDC:022/00 | 200 |
| 36 | 964651430000 | GASKET-SW-GRP-6"C150-GV-NC06 | 3VNC0623981/01 | VL:STDC:022/00 | 1000 |
| 37 | 964568780000 | GASKET-SW-GRP-14"-C150-GV-N702 | 3VN70295038/00 | VL:STDC:022/00 | 100 |
| 38 | 964567760000 | GASKET-SW-GRP-20"-C150-GV-N597 | 3VN59795038/00 | VL:STDC:022/00 | 50 |
| 39 | 964567750000 | GASKET-SW-GRP-16"-C150-GV-N596 | 3VN59695038/00 | VL:STDC:022/00 | 100 |
| 40 | 964536530000 | GASKET-SW-GRP-24"C150-FV-5192 | 3V519223485/00 | VL:STDC:022/00 | 50 |
| 41 | 964536080000 | GASKET-SW-GRP-18"C150-GV-N730 | 3VN73023423/00 | VL:STDC:022/00 | 100 |
| 42 | 964536470000 | GASKET-SW-GRP-24"C150-GV-N805 | 3VN80523423/00 | VL:STDC:022/00 | 50 |
| 43 | 964651630000 | GASKET-SW-GRP-10"C150-GV-NC10 | 3VNC1024014/01 | VL:STDC:022/00 | 200 |
| 44 | 964656210000 | GASKET-SW-14 c150 FV | 3VZ08295816/01 | VL:STDC:022/00 | 50 |
| 45 | 964562500000 | GASKET-SW-GRP-6"-C150-GV-N001 | 3VN00195038/03 | VL:STDC:022/00 | 200 |
| 46 | 964562090000 | GASKET-SW-GRP-4"-C150-GV-N033 | 3VN03395038/03 | VL:STDC:022/00 | 2000 |
| 47 | 964562080000 | GASKET-SW-GRP-3"-C150-GV-N025 | 3VN02595038/03 | VL:STDC:022/00 | 2000 |
| 48 | 964653770000 | SEALING RING-5107 | 4V510790153/02 | - | 100 |
| 49 | 964532690000 | SOFT IRON GASKET SI.PL-R066 | 2VR06615634/02 | TDC:5:158/00 | 50 |
| 50 | 964532630000 | SOFT IRON GASKET-G042 | 2VG04215634/02 | TDC:5:158/00 | 100 |
| 51 | 964532540000 | SOFT IRON GASKET SIL.PL-G005 | 2VG00515634/02 | TDC:5:158/00 | 50 |
| 52 | 964532400000 | SOFT IRON GASKET SI.PL-W007 | 2VW00715634/02 | TDC:5:158/00 | 100 |
| 53 | 964523870000 | GASKET-SI-2/3C150/300,2.5/3SPL | 3V515206415/00 | - | 500 |
| 54 | 964523430000 | GASKET-SI-8C150/300/300SPL, 10 | 3V515006415/00 | - | 500 |
| 55 | 964608290000 | GASKET-SI-14/16/18C300/300SP,2 | 3VZ02106415/00 | - | 200 |
| 56 | G96110180000 | Gasket-3mm,COAL NOZZLE GASKET (METRIC) (Var-01) | 3-45-320-01302 | TP23292 | 100 |
| 57 | 964650440000 | GASKET (GRAFOIL)-N827 | 3VN82723660/00 | - | 30 |
| 58 | 964652530000 | GASKET (GRAFOIL)-6-600-GV-CF | 3VK24924458/00 | - | 200 |
| 59 | 964653090000 | GASKET (GRAFOIL)-N845 | 3VN84524458/00 | - | 200 |
| 60 | 963536480000 | GASKET GRAFOIL (32X27) | 42020100356/04 | - | 2000 |
| 61 | 964652400000 | GASKET (GRAFOIL)-A899-16-C150- | 3VA89924458/00 | - | 100 |
| 62 | 964652480000 | GASKET (GRAFOIL)-10-300-GV-CF | 3VA90824458/00 | - | 100 |
| 63 | 964652470000 | GASKET (GRAFOIL)-8-300-GV/RV-C | 3VA90724458/00 | - | 100 |
| 64 | 964652460000 | GASKET (GRAFOIL)-6-300-RV/GV/F | 3VA90624458/00 | - | 200 |
| 65 | 964652450000 | GASKET (GRAFOIL)-4-150-GV/RV/F | 3VA90524458/00 | - | 200 |
| 66 | 964652070000 | GASKET-TEFLON-6C150FV-CF | 4VU33990215/00 | - | 100 |
| 67 | 964568710000 | GASKET-SW-GRP-OD250XID228.5X4. | 3VN24895816/01 | - | 100 |
| 68 | 964659150000 | GASKET-SW-GRP-2.5"-C150-GV-NP4 | 4VNP4327465/00 | VL:STDC:022/00 | 200 |

ALL DIMENSIONS ARE IN MILLIMETRES. FOR TOLERANCES OF UNTOLERANCED DIMENSIONS DURING MANUFACTURE REFER RELEVANT QCP / QP.

DRAWING NO. 3-V-0000-24169

| SL. NO. | DRAWING NO. | COMPONENT CODE | DIMENSIONS | | | NET WT.(KG) | APPLICABLE VALVE PARAMETER | | |
|---|---|---|---|---|---|---|---|---|---|
| | | | øD | ød | t | | SIZE/RATING | MAX.TEMP.-°F | MAX.PR.-PSIG |
| 01 | 3-V-ZC02-24169 | 964651710000 | 120 | 108 | 3.2 | 0.06 | 2"/150C FV | 1100 | 750 |
| 02 | 3-V-ZC03-24169 | 964651750000 | 133 | 120 | 3.2 | 0.07 | 3"/150C FV | 1100 | 750 |
| 03 | 3-V-ZC08-24169 | 964651830000 | 283 | 263 | 3.2 | 0.1 | 8"/150C FV | 1100 | 750 |
| 04 | 3-V-NC34-24169 | 964651850000 | 166 | 152 | 4.5 | 0.08 | 4"/300C GV | 1100 | 750 |
| 05 | 3-V-NC36-24169 | 964651860000 | 220.5 | 203.5 | 4.5 | 0.1 | 6"/300C GV | 1100 | 750 |
| 06 | 3-V-NC38-24169 | 964651820000 | 283 | 265 | 4.5 | 0.13 | 8"/300C GV | 1100 | 750 |
| 07 | 3-V-NC30-24169 | 964651980000 | 346 | 324 | 4.5 | 0.15 | 10"/300C GV | 1100 | 750 |
| 08 | 3-V-NC40-24169 | 964651960000 | 399 | 376 | 4.5 | 0.17 | 12"/300C GV | 1100 | 750 |
| 09 | 3-V-P340-24169 | 964657920000 | 221 | 195 | 4.5 | 0.14 | 6"/300C RV | 1100 | 750 |
| 10 | 3-V-P485-24169 | 964657930000 | 285 | 260 | 4.5 | 0.18 | 8"/300C RV | 1100 | 750 |

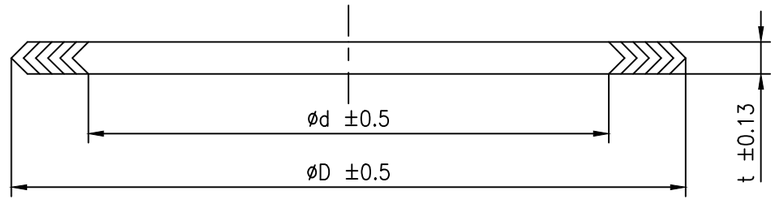


## NOTES:-

01. FOR QUALITY REQUIREMENTS REFER LATEST APPLICABLE QUALITY PROCEDURE.
02. THESE SPIRAL WOUND GASKETS SHALL WITHSTAND A SERVICE PRESSURE AND SERVICE TEMP. AS REFERRED IN THE TABULATION.
03. MATERIAL : AISI 316 WITH GRAFOIL FILLED.
04. LEGENDS : GV – WEDGE GATE VLAVE
FV – SWING CHECK VALVE
SV – GLOBE VALVE

| NO OFF | DESCRIPTION | MATL CODE | MATL SPECN | HEAT TREATMENT | SCRAP SORT | NET WT (kg) | GROSS WT (kg) | DRAWING No | ITEM No |
|---|---|---|---|---|---|---|---|---|---|
| | | | | | | | | | |

| REV | DATE | ALTERED / CHD & APPD |
|---|---|---|
| 02 | 01.09.17 | ALTERED SANGEETHA.T<br>CHD & APPD SSK & KRS |
| | | SL.Nos. 09 & 10 INCLUDED |
| 01 | 01.08.07 | ALTERED T.R.RAMAMURTHY<br>CHD & APPD P.BOOMINATHAN |
| | | SL.Nos. 04 TO 08 INCLUDED |

CAUTION: The information on this document is the property of BHARAT HEAVY ELECTRICALS LTD. It must not be used directly or indirectly in any way detrimental to the interest of the company.

TYPE OF PRODUCT OR NAME OF CUSTOMER/PROJECT: CS

BHARAT HEAVY ELECTRICALS LTD.
UNIT: HIGH PRESSURE BOILER PLANT.
TIRUCHIRAPALLI 620014.
365-121

| | NAME | SIGN | DATE | NO.OF VAR. |
|---|---|---|---|---|
| DRN | A.S.PANDY | | 29.05.06 | |
| CHD | T.R.RAMAMURTHY | | 29.05.06 | |
| APPD | P.BOOMINATHAN | | 29.05.06 | |

DEPT: VL
CODE: 320
SCALE: N T S
WEIGHT (KG): REF. TABLE
REFERENCE INFORMATIONS: CAD REF: C324169
NO. OF ITEMS

TITLE: SPIRAL WOUND GASKET (CIRCULAR GRAFOIL FILLED)
CARD CODE: U 01
DRAWING NO. 3-V-0000-24169
REV 02

Size A3

ALL DIMENSIONS ARE IN MILLIMETRES. FOR TOLERANCES OF UNTOLERANCED DIMENSIONS DURING MANUFACTURE REFER RELEVANT QCP / QP.

DRAWING NO. 3-V-0000-95816

| SL. NO. | DRAWING NO. | COMPONENT CODE | DIMENSIONS | | | NET WT.(KG) | APPLICABLE VALVE PARAMETER | | |
|---|---|---|---|---|---|---|---|---|---|
| | | | øD | ød | t | | SIZE/RATING | MAX.TEMP.-°F | MAX.PR.-PSIG |
| 01 | 3-V-N248-95816/1 | 964568710000 | 250 | 228.5 | 4.5 | 0.14 | 5"/150C GV<br>5"& 6"/300C GV | 1100 | 750 |
| 02 | 3-V-N244-95816/1 | 964568720000 | 310 | 289.5 | 4.5 | 0.16 | 8"/300C GV | 1100 | 750 |
| 03 | 3-V-N235-95816/1 | 964568730000 | 385 | 355.5 | 4.5 | 0.23 | 10"/300C GV | 1100 | 750 |
| 04 | 3-V-N608-95816/1 | 964569340000 | 450.5 | 425.5 | 4.5 | 0.42 | 12"/300C GV | 1100 | 750 |
| 05 | 3-V-Z021-95816/1 | 964608600000 | 595 | 555 | 4.5 | 0.91 | 20"/150C FV | 1100 | 750 |
| 06 | 3-V-Z022-95816/1 | 964608610000 | 514 | 462 | 4.5 | 0.755 | 16"/300C FV | 1100 | 750 |
| 07 | 3-V-Z023-95816/1 | 964608620000 | 422 | 382 | 4.5 | 0.14 | 14"/300C FV | 1100 | 750 |
| 08 | 3-V-U085-95816/1 | 964650630000 | 426 | 402 | 4.5 | 0.38 | 12"/300C FV | 1100 | 750 |
| 09 | 3-V-Z082-95816/1 | 964656210000 | 432 | 394 | 4.5 | 0.40 | 14"/150C FV | 1100 | 750 |
| 10 | 3-V-Z085-95816/1 | 964656220000 | 557 | 519 | 4.5 | 0.89 | 18"/150C FV | 1100 | 750 |
| 11 | 3-V-Z089-95816/1 | 964656300000 | 497 | 458 | 4.5 | 0.75 | 16"/150C FV | 1100 | 750 |
| 12 | 3-V-RV10-95816 | 964657830000 | 165 | 137 | 3.2 | 0.13 | 4"/300C RV (SD) | 1100 | 750 |

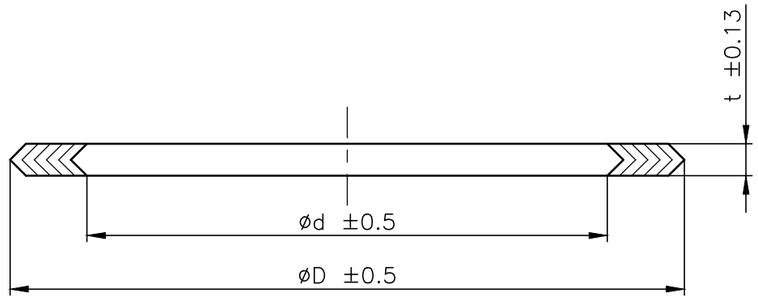


## NOTES:-

01. FOR QUALITY REQUIREMENTS REFER LATEST APPLICABLE QUALITY WORK INSTRUCTION.
02. THESE SPIRAL WOUND GASKETS SHALL WITHSTAND A SERVICE PRESSURE AND SERVICE TEMP. AS REFERRED IN THE TABULATION.
03. MATERIAL : AISI 316 WITH SPIRAL WOUND GRAFOIL FILLED.
04. LEGENDS : GV – WEDGE GATE VLAVE
FV – SWING CHECK VALVE

| NO OFF | DESCRIPTION | MATL CODE | MATL SPECN | HEAT TREATMENT | SCRAP SORT | NET WT (kg) | GROSS WT (kg) | DRAWING No | ITEM No |
|---|---|---|---|---|---|---|---|---|---|
| – | – | – | – | – | – | – | – | – | – |

| REV | DATE | ALTERED | |
|---|---|---|---|
| 06 | 24.11.16 | R.ANITHA | |
| | | CHD & APPD | SSK & KRS |
| | SL.NO. 12 INCLUDED. | | |

| REV | DATE | ALTERED | |
|---|---|---|---|
| 05 | 31.03.16 | K.NAVIN | |
| | | CHD & APPD | MS & SSK |
| | FOR SL.No. 09,10&11 DIMENSION ød 394,519&458 WERE 390,515&457 RESPLY.<br>DCP:802098 | | |

| REV | DATE | ALTERED | |
|---|---|---|---|
| 4 | 29.03.14 | VB | |
| | | CHD & APPD | SSK & KRS |
| | SL.Nos.09 TO 11 INCLUDED. | | |

CAUTION: The information on this document is the property of BHARAT HEAVY ELECTRICALS LTD. It must not be used directly or indirectly in any way detrimental to the interest of the company.

TYPE OF PRODUCT
OR NAME OF
CUSTOMER/PROJECT

REDRAWN WITH REV.4 ON 29.03.14

BHARAT HEAVY ELECTRICALS LTD.,
UNIT: HIGH PRESSURE BOILER PLANT.
TIRUCHIRAPALLI-620014.
365-121

| | NAME | SIGN | DATE | NO.OF VAR. |
|---|---|---|---|---|
| DRN | V.BAIRAVAN | | 29.03.14 | |
| CHD | S.SATHEESKUMAR | | 29.03.14 | |
| APPD | K.RAJASEKARAN | | 29.03.14 | |

| DEPT | SCALE | WEIGHT (KG). | REFERENCE INFORMATIONS | NO. OF ITEMS |
|---|---|---|---|---|
| VL | N T S | REF. TABLE | | |
| CODE 320 | | | | |

| TITLE | CARD CODE | DRAWING NO. | REV |
|---|---|---|---|
| SPIRAL WOUND GASKET<br>(CIRCULAR GRAFOIL FILLED) | U 01 | 3-V-0000-95816 | 06 |

Size A3

ALL DIMENSIONS ARE IN MILLIMETRES.

FOR TOLERANCES OF UNTOLERANCED DIMENSIONS DURING MANUFACTURE REFER RELEVANT QCP/QP

| REV | DATE | ALTERED |
|---|---|---|
| | | CHD & APPD |

CAUTION: The information on this document is the property of BHARAT HEAVY ELECTRICALS LTD. It must not be used directly or indirectly in any way detrimental to the interest of the company.

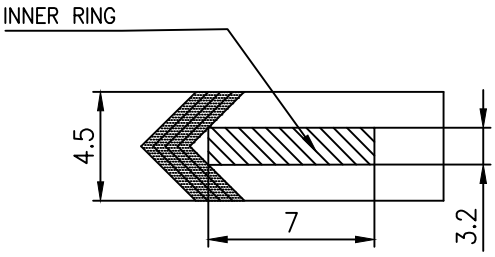


SECTION–XX

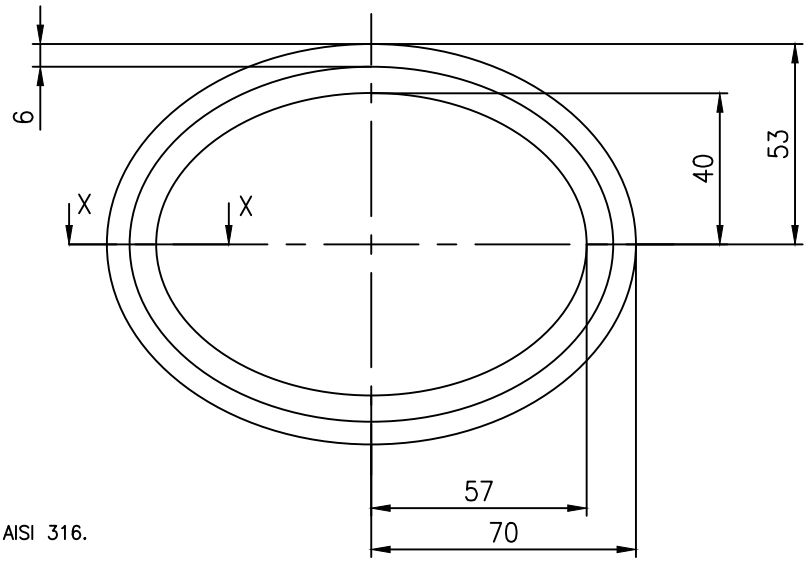


MATERIAL: SPIRAL WOUND GRAFOIL FILLED WITH AISI 316.

## NOTES:

1. ALL DIMENSIONS ARE IN MM UNLESS OTHERWISE SPECIFIED.
2. INNER RING OF 316 STAINLESS STEEL SHALL BE PROVIDED.
3. PURCHASE SPECIFICATIONS SHALL BE AS PER APPLICABLE QUALITY PROCEDURE.

WORKING CONDITIONS
PRESSURE–30kg/sq.cm
TEMPERATURE–45°C TO 550°C

DIMENSIONAL TOLERANCES FOR GASKET
INSIDE DIMENSIONS ±0.5
OUTSIDE DIMENSIONS ±0.5
THICKNESS ±0.13

| SL. No. | DRAWING No. | COMP.CODE. | SIZE | MATL.CODE | MATL SPECN / SCH.NO | NET WT(Kg) | GROSS WT(Kg) |
|---|---|---|---|---|---|---|---|
| 01 | 4–V–NP43–27465 | 964659150000 | | – | | 0.20 | |

| NO OFF | DESCRIPTION | MATL CODE | MATL SPECN | HEAT TREATMENT | SCRAP SORT | NET WT (kg) | GROSS WT (kg) | DRAWING No | ITEM No |
|---|---|---|---|---|---|---|---|---|---|
| | | | | | | | | | |

BHARAT HEAVY ELECTRICALS LTD.,
UNIT: HIGH PRESSURE BOILER PLANT.
TIRUCHIRAPALLI 620014.
365–122

| | NAME | SIGN | DATE | NO.OF VAR |
|---|---|---|---|---|
| DRN | R.P.SINGH | | 10.09.19 | |
| CHD | SAMEER BHAT | | 10.09.19 | |
| APPD | S.SATHEES | | 10.09.19 | |

| DEPT | SCALE | WEIGHT (KG). | REFERENCE INFORMATIONS | NO. OF ITEMS |
|---|---|---|---|---|
| VL | NTS | | | |
| CODE 320 | | | | |

| TITLE | CARD CODE | DRAWING NO. | REV |
|---|---|---|---|
| SPIRAL WOUND GASKET | U 01 | 4–V–0000–27465 | |

Size A4

DRAWING NO. 2-V-0000-15634/2

ALL DIMENSIONS ARE IN MILLIMETRES. FOR TOLERANCES OF UNTOLERANCED DIMENSIONS DURING MANUFACTURE REFER RELEVANT QCP / QP

3.2 / 0.8

| S.NO | DRAWING NO. | MATERIAL. SPECN. | MATERIAL. CODE | D1 | D2 | L | L1 | T | T1 | T2 | RA | RB | FINISHED WEIGHT | TOA DRAWING NO. | SIZE/RATING |
|---|---|---|---|---|---|---|---|---|---|---|---|---|---|---|---|
| 1. | 2-V-W007-15634/2 | SOFT IRON | 96 453 240 | 95 | 85 | 10 | 5 | 5 | 0.75 | 1 | 3 | 0.5 | 0.072 | 4-E47417 (0065) | 65/2500 & 80/1500 |
| 2. | 2-V-W010-15634/2 | | 96 453 241 | 125 | 111 | 14 | 7 | 7 | 0.75 | 1.5 | 3 | 0.5 | 0.195 | 4-E47426 (0036) | 100/2500 |
| 3. | 2-V-W013-15634/2 | | 96 453 242 | 250 | 220 | 30 | 15 | 15 | 1 | 2 | 5 | 1 | 1.69 | 4-E47464 (0101) | 200/2500 |
| 4. | 2-V-W016-15634/2 | | 96 453 243 | 285 | 250 | 35 | 17.5 | 17.5 | 1 | 2 | 5 | 1 | 2.58 | 4-E47479 (0136) | 250/2500 |
| 5. | 2-V-W019-15634/2 | | 96 453 244 | 335 | 295 | 40 | 20 | 20 | 1 | 2 | 5 | 1 | 3.93 | 4-E47496 (0197) | 300/2500 |
| 6. | 2-V-W022-15634/2 | | 96 453 245 | 380 | 330 | 50 | 25 | 25 | 1 | 2.5 | 5 | 1 | 6.98 | 4-E47504 (0169) | 350/2500 |
| 7. | 2-V-W050-15634/2 | | 96 453 246 | 110 | 96 | 14 | 7 | 7 | 0.75 | 1.5 | 3 | 0.5 | 0.17 | 4-E47423 (0554) | 65/1500 |
| 8. | 2-V-W054-15634/2 | | 96 453 247 | 140 | 126 | 14 | 7 | 7 | 0.75 | 1.5 | 3 | 0.5 | 0.220 | 4-E47429 (0583) | 100/1500 & 150/2500 |
| 9. | 2-V-W058-15634/2 | | 96 453 248 | 210 | 186 | 24 | 12 | 12 | 1 | 1.5 | 5 | 0.5 | 0.890 | 4-E47452 (0619) | 150/1500 |
| 10. | 2-V-W062-15634/2 | | 96 453 249 | 335 | 305 | 30 | 15 | 15 | 1 | 2 | 5 | 1 | 2.30 | 4-E47473 (0652) | 300/1500 |
| 11. | 2-V-W066-15634/2 | | 96 453 250 | 175 | 151 | 24 | 12 | 12 | 1 | 1.5 | 5 | 0.5 | 0.73 | 4-E58446 (0676) | 150/2500 |
| 12. | 2-V-W070-15634/2 | | 96 453 251 | 410 | 360 | 50 | 25 | 25 | 1 | 2.5 | 5 | 1 | 7.56 | 4-E47508 (0711) | 400/2500 |
| 13. | 2-V-W074-15634/2 | | 96 453 252 | 450 | 400 | 50 | 25 | 25 | 1 | 2.5 | 5 | 1 | 8.34 | 4-E47513 (0739) | 450/2500 |
| 14. | 2-V-W078-15634/2 | | 96 453 253 | 465 | 405 | 60 | 30 | 30 | 1 | 2.5 | 5 | 1 | 12.7 | 4-E58762 (0767) | 500/2750 |
| 15. | 2-V-G005-15634/2 | | 96 453 254 | 115 | 101 | 14 | 7 | 7 | 0.75 | 1.5 | 3 | 0.5 | 0.18 | 4-E47424 (0213) | 100/1500 & 100/2500 |
| 16. | 2-V-G008-15634/2 | | 96 453 255 | 140 | 122 | 18 | 9 | 9 | 0.75 | 1.5 | 3 | 0.5 | 0.35 | 4-E47436 (0232) | 150/2500 |
| 17. | 2-V-G014-15634/2 | | 96 453 256 | 100 | 86 | 14 | 7 | 7 | 0.75 | 1.5 | 3 | 0.5 | 0.15 | 4-E47421 (0010) | 65/3500 & 80/2500 |
| 18. | 2-V-L007-15634/2 | | 96 453 257 | 190 | 166 | 24 | 12 | 12 | 1 | 1.5 | 5 | 0.5 | 0.80 | 4-E47448 (0280) | 200/2500 |
| 19. | 2-V-L010-15634/2 | | 96 453 258 | 270 | 240 | 30 | 15 | 15 | 1 | 2 | 5 | 1 | 1.83 | 4-E47467 (0306) | 300/2500 |
| 20. | 2-V-L030-15634/2 | | 96 453 259 | 325 | 290 | 35 | 17.5 | 17.5 | 1 | 2 | 5 | 1 | 2.96 | 4-E47485 (0472) | 350/2500 |
| 21. | 2-V-L034-15634/2 | | 96 453 260 | 420 | 370 | 50 | 25 | 25 | 1 | 2.5 | 5 | 1 | 7.76 | 4-E47511 (0500) | 450/2500 |
| 22. | 2-V-W114-15634/2 | | 96 453 261 | 250 | 226 | 24 | 12 | 12 | 1 | 1.5 | 5 | 0.5 | 1.07 | 4-E47457 (0812) | 200/1500 |
| 23. | 2-V-W118-15634/2 | | 96 453 262 | 295 | 265 | 30 | 15 | 15 | 1 | 2 | 5 | 1 | 2.01 | 4-E47471 (0847) | 250/1500 |
| 24. | 2-V-G042-15634/2 | | 96 453 263 | 90 | 80 | 10 | 5 | 5 | 0.75 | 1 | 3 | 0.5 | 0.068 | 4-E47416 (0868) | 65/1500 |
| 25. | 2-V-L058-15634/2 | | 96 453 264 | 175 | 157 | 18 | 9 | 9 | 0.75 | 1.5 | 3 | 0.5 | 0.44 | 4-E47442 (0949) | 150/1500 |
| 26. | 2-V-L082-15634/2 | | 96 453 265 | 315 | 280 | 35 | 17.5 | 17.5 | 1 | 2 | 5 | 1 | 2.87 | 4-E47483 (1241) | 350/2500 STOP CHECK |
| 27. | 2-V-L074-15634/2 | | 96 453 266 | 350 | 310 | 40 | 20 | 20 | 1 | 2 | 5 | 1 | 4.11 | 4-E47497 (1272) | 300/2000 ELB |
| 28. | 2-V-G138-15634/2 | | 96 453 267 | 385 | 335 | 50 | 25 | 25 | 1 | 2.5 | 5 | 1 | 7.08 | 4-E47505 (1209) | 400/2500 GLOBE NEEDLE |
| 29. | 2-V-W410-15634/2 | | 96 453 268 | 370 | 335 | 35 | 17.5 | 17.5 | 1 | 2 | 5 | 1 | 3.39 | 4-E47490 | 350/1500 |
| 30. | 2-V-R066-15634/2 | | 96 453 269 | 135 | 121 | 14 | 7 | 7 | 0.75 | 1.5 | 3 | 0.5 | 0.211 | 4-E47428 | 125/1500 |
| 31. | 2-V-W338-15634/2 | | 96 453 270 | 115 | 97 | 18 | 9 | 9 | 0.75 | 1.5 | 3 | 0.5 | 0.282 | 4-E47432 (1670) | 80/3500 |
| 32 | 2-V-W354-15634/2 | | 96 453 271 | 145 | 127 | 18 | 9 | 9 | 0.75 | 1.5 | 3 | 0.5 | 0.361 | 4-E47437 (1642) | 125/2500 |
| 33. | 2-V-W516-15634/2 | | 96 453 272 | 480 | 420 | 60 | 30 | 30 | 1 | 2.5 | 5 | 1 | 12.54 | 4-E47516 (2256) | 450/2000 |

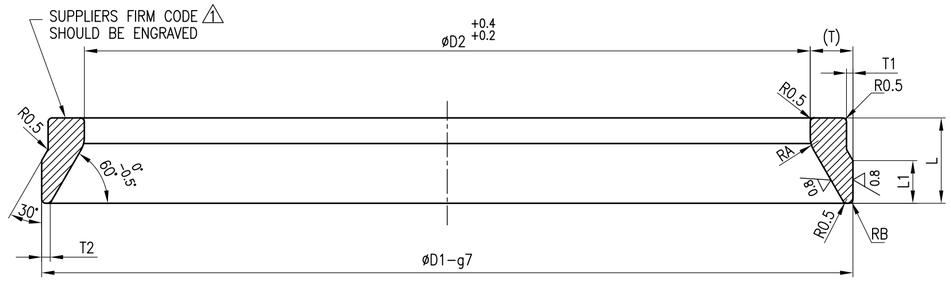


| | |
|---|---|
| ø 80 TO | -0.012 |
| ø 120 g7 | -0.047 |
| ø 120 TO | -0.014 |
| ø 180 g7 | -0.054 |
| ø 180 TO | -0.015 |
| ø 250 g7 | -0.061 |
| ø 250 TO | -0.017 |
| ø 315 g7 | -0.069 |
| ø 315 TO | -0.018 |
| ø 400 g7 | -0.075 |
| ø 400 TO | -0.020 |
| ø 500 g7 | -0.083 |

## NOTES :

01. APPLICABLE LATEST T D C SHALL BE FOLLOWED IN ALL RESPECTS.
02. HARDNESS: MAX, 90 BHN.
03. GASKETS SHALL BE SILVER PLATED TO A THICKNESS OF 0.0127mm MAX.
04. THE DIMENSIIONS GIVEN IN THE TABULAR COLUMN IS AFTER SILVER PLATING.

REDRAWN WITH REV.2 ON 12.04.08

| No OFF | DESCRIPTION | MATL CODE | MATL SPECN | HEAT TREATMENT | SCRAP SORT | NET WT (kg) | GROSS WT (kg) | DRAWING No | ITEM No |
|---|---|---|---|---|---|---|---|---|---|

TYPE OF PRODUCT
OR NAME OF
CUSTOMER/PROJECT

BHARAT HEAVY ELECTRICALS LTD.,
UNIT: HIGH PRESSURE BOILER PLANT.
TIRUCHIRAPALLI -620014.
365-120

| | NAME | SIGN | DATE | NO.OF VAR. |
|---|---|---|---|---|
| DRN | V.SIVALINGAM | | 12.04.08 | |
| CHD | K.RAJASEKARAN | | 12.04.08 | |
| APPD | M.RAJAKUMAR | | 12.04.08 | |

DEPT VL
CODE
SCALE N T S
WEIGHT (KG).
REFERENCE INFORMATIONS
NO. OF ITEMS

TITLE: GASKET
CARD CODE: U 01
DRAWING NO. 2-V-0000-15634
REV 2

| REV | DATE | ALTERED VB |
|---|---|---|
| 2 | 12.04.08 | CHD & APPD KRS&MRK |

ZONE
DRAWING CONVERTED INTO SOFT COPY
DCP No.800813

CAUTION: The information on this document is the property of BHARAT HEAVY ELECTRICALS LTD. It must not be used directly or indirectly in any way detrimental to the interest of the company.

Size A2

DRAWING NO: 3-45-320-01302

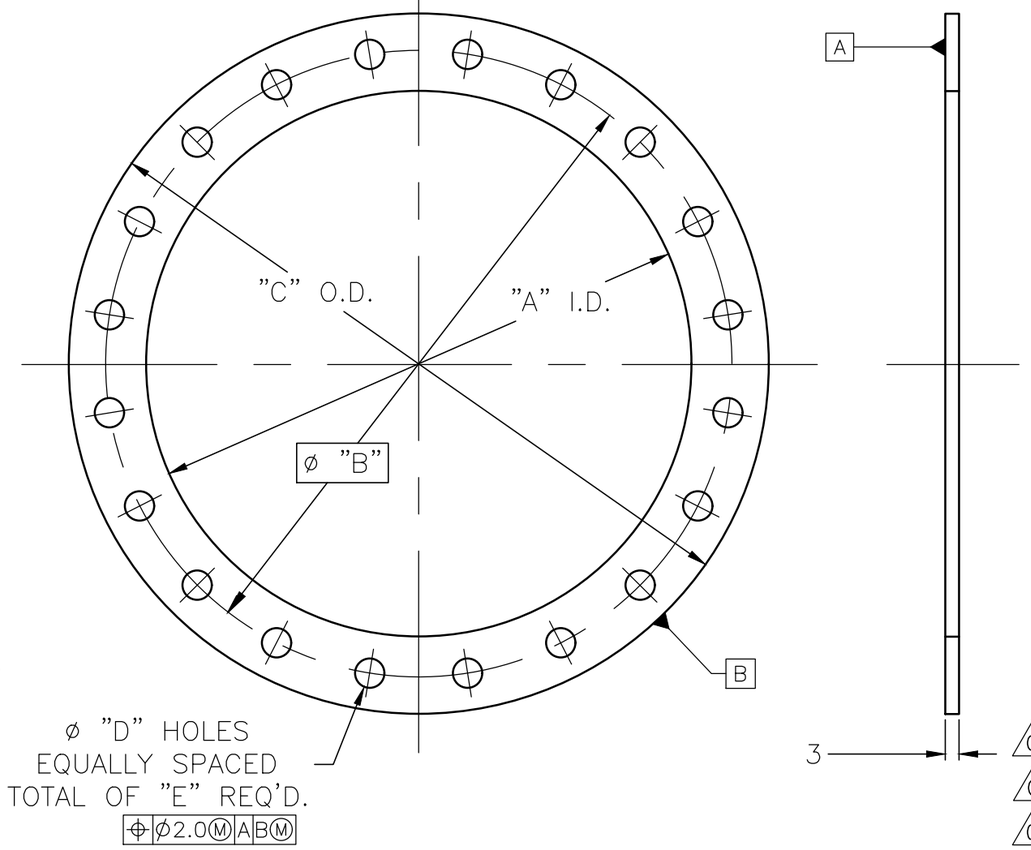


| COAL NOZZ SIZE | VARIANT NO. | A | B | C | D | E | WT.(Kg) |
|---|---|---|---|---|---|---|---|
| 660 | 01 | 695 | 736 | 775 | 18 | 20 | 0.497 |
| 450 | 02 | 495 | 527 | 565 | 18 | 12 | 0.314 |
| 400 | 03 | 445 | 476.25 | 515 | 17 | 12 | 0.285 |
| 610 | 04 | 645 | 686 | 725 | 18 | 20 | 0.461 |
| 540 | 05 | 620 | 660 | 700 | 18 | 20 | 0.443 |
| 610 | 06 | 656 | 708 | 758 | 20 | 20 | 0.609 |
| --- | 07 | 370 | 450 | 494 | 22 | 12 | 0.453 |
| --- | 08 | 417 | 510 | 564 | 22 | 12 | 0.619 |
| --- | 09 | 410 | 460 | 510 | 25 | 12 | 0.378 |
| --- | 10 | 425 | 500 | 540 | 22 | 12 | 0.470 |
| --- | 11 | 475 | 561 | 600 | 22 | 12 | 0.575 |
| --- | 12 | 360 | 590 | 650 | 23 | 20 | 1.263 |
| --- | 13 | 750 | 804 | 854 | 18 | 20 | 0.717 |
| --- | 14 | 645 | 680 | 718 | 18 | 20 | 0.416 |
| 406 | 15 | 431 | 469 | 514 | 18 | 12 | 0.333 |
| 508 | 16 | 533 | 578 | 616 | 18 | 12 | 0.409 |
| 660 | 17 | 664 | 724 | 762 | 18 | 20 | 0.596 |
| 508 | 18 | 514 | 572 | 610 | 18 | 20 | 0.454 |
| 734 | 19 | 790 | 834 | 884 | 18 | 20 | 0.675 |
| 711 | 20 | 733 | 787 | 826 | 18 | 20 | 0.620 |
| 660 | 21 | 692 | 777 | 812 | 18 | 20 | 0.779 |

FOR TOLERANCES OF UNTOLERANCED DIMENSIONS DURING MANUFACTURE REFER PLANT STD.NO TP 023 0299

| VARIANT NUMBER | ITEM NUMBER | DESCRIPTION | STD | DRAWING NUMBER | ITEM NO / VAR NO | MATERIAL CODE / MATERIAL SPECN | A/C/P | UNIT / DI | UNIT WEIGHT / QUANTITY | GS |
|---|---|---|---|---|---|---|---|---|---|---|
| | | GASKET -3mm X OD"C" (NON-ASBESTOS) | | | | 220300150000 / TP23292 | | NO | REFER TABLE / 1 | |

GENERAL NOTES:

1. DIMENSIONS AND TOLERANCES PER ASME Y14.5M-1994
   UNLESS OTHERWISE SPECIFIED:
   a. ALL DIMENSIONS ARE IN MILLIMETERS.
   b. TOLERANCES ON DIMENSIONS ±1.0
   c. TOLERANCES ON ANGULAR DIMENSIONS ±1°00'

| REV | DATE | ALTERED : BIMAL / CHD & APPD: | ZONE | VARIANT NO 20 & 21 ARE ADDED AS PER REVISED ALSTOM DWG NO B-902-02562 R17. |
|---|---|---|---|---|
| 02 | 16.02.18 | PREETAM & SHANKAR | | |
| 01 | 05.10.15 | SHANKAR&GSK | | CAF GASKET IS REPLACED WITH NON ASBESTOS GASKET -3mm VARIANT 19 ADDED. |

CAUTION: The information on this document is the property of BHARAT HEAVY ELECTRICALS LTD. It must not be used directly or indirectly in any way detrimental to the interest of the company.

TYPE OF PRODUCT OR NAME OF CUSTOMER/PROJECT

Bharat Heavy Electricals Ltd
UNIT: HIGH PRESSURE BOILER PLANT
TIRUCHIRAPALLI - 620014
355-055

| | NAME | SIGNATURE | DATE |
|---|---|---|---|
| DRN | G S K | -sd- | 16.02.2018 |
| CHD | G S K | -sd- | 16.02.2018 |
| APPD | M T P | -sd- | 16.02.2018 |

DEPT FS | CODE 129 | ALL DIMENSIONS ARE IN MM | PROJECTION | SCALE NTS | WEIGHT (Kg) REF. TABLE | REF TO ASSY / OLD DWG B-902-2562/17

TITLE: COAL NOZZLE GASKET

DRAWING NO : 3-45-320-01302 | REV 02

ALL DIMENSIONS ARE IN MILLIMETRES. FOR TOLERANCES OF UNTOLERANCED DIMENSIONS DURING MANUFACTURE REFER RELEVANT QCP / QP.

DRAWING NO. 3-V-0000-06415/3

| SL. No. | DRAWING No. | COMP. CODE | DIMENSIONS øD | ød | t | WT. (kg) | APPLICABLE TYPE NOS. |
|---|---|---|---|---|---|---|---|
| 01 | 3-V-5144-06415 | 96 452 342 0000 | 36 | 28 | 1 | 0.003 | 5144 |
| 02 | 3-V-5150-06415 | 96 452 343 0000 | 42 | 33 | 1 | 0.005 | 5150 |
| 03 | 3-V-5152-06415 | 96 452 387 0000 | 28 | 22 | 1 | 0.002 | 5152 |
| 04 | 3-V-Z021-06415 | 96 460 829 0000 | 64 | 54 | 1 | 0.008 | Z021 |
| 05 | 3-V-Z077-06415 | 96 466 104 0000 | 130 | 78 | 1 | 0.018 | Z077 |
| | | | | | | | |

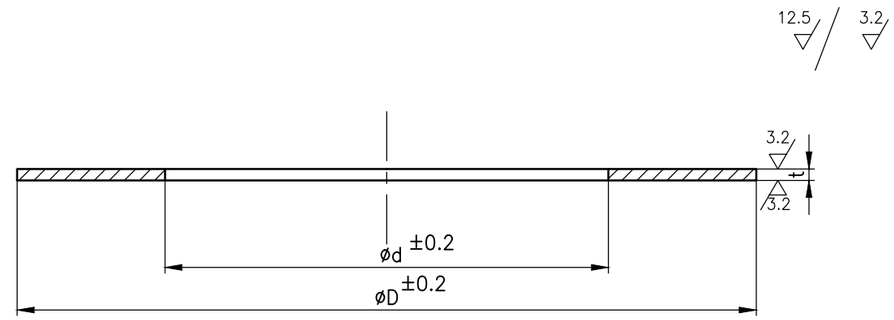


## NOTES:

1. THESE SOFT IRON GASKETS SHALL WITHSTAND A SERVICE PRESSURE RANGE OF 95 TO 750 PSIG (6.7KG/cm2 TO 52.75 KGF/cm2) AND SERVICE TEMPERTURE RANGE OF -50° TO 1100° F (-45 TO 600°C)
2. THESE SOFT IRON GASKETS ARE APPLICABLE FOR CARBON STEEL AND ALLOY STEEL VALVES OF ABOVE PARAMETERS AND THEIR ALLIED VALVES

MATL: SOFT IRON WITH HARDNESS = 90 HB MAX.

| NO OFF | DESCRIPTION | MATL CODE | MATL SPECN | HEAT TREATMENT | SCRAP SORT | NET WT (kg) | GROSS WT (kg) | DRAWING No | ITEM No |
|---|---|---|---|---|---|---|---|---|---|
| | | | | | | | | | |

REDRAWN WITH REV. 3 ON 24.12.12

| REV | DATE | ALTERED | V.B |
|---|---|---|---|
| 03 | 24.12.12 | CHD & APPD | S.S.K & K.R.S |

SL.No. 05 INCLUDED.

CAUTION: The information on this document is the property of BHARAT HEAVY ELECTRICALS LTD. It must not be used directly or indirectly in any way detrimental to the interest of the company.

TYPE OF PRODUCT OR NAME OF CUSTOMER/PROJECT: CS

BHARAT HEAVY ELECTRICALS LTD.
UNIT: HIGH PRESSURE BOILER PLANT.
TIRUCHIRAPALLI 620014.
365-121

| | NAME | SIGN | DATE | NO.OF VAR. |
|---|---|---|---|---|
| DRN | V.BAIRAVAN | | 24.12.12 | – |
| CHD | S.SATHEES | | 24.12.12 | |
| APPD | K.RAJASEKARAN | | 24.12.12 | |

DEPT: VL
CODE: 320
SCALE: NTS.
WEIGHT (KG).: REF. TABLE
REFERENCE INFORMATIONS
NO. OF ITEMS: –

TITLE: SOFT IRON GASKET
CARD CODE: U 01
DRAWING NO.: 3-V-0000-06415
REV: 3

Size A3

ALL DIMENSIONS ARE IN MILLIMETRES. FOR TOLERANCES OF UNTOLERANCED DIMENSIONS DURING MANUFACTURE REFER RELEVANT QCP / QP.

DRAWING NO. 3–V–0000–24014

| SL. NO. | DRAWING NO. | COMP. CODE | DIMENSIONS | | | | | | | | | | NET WT.(Kg.) | VALVE SPECN. |
|---|---|---|---|---|---|---|---|---|---|---|---|---|---|---|
| | | | L | L1 | R | RA | RB | H | H1 | C1 | C | | | |
| 01 | 3–V–NC08–24014 | 964651460000 | 319 | 295.8 | 772.53 | 58 | 10 | 152.8 | 35.5 | 7 | 8 | | 0.22 | 8”/150CL |
| 02 | 3–V–NC10–24014/1 | 964651630000 | 382 | 356 | 1028 | 65 | 10 | 170 | 41.8 | 7 | 8 | | 0.28 | 10”/150CL |

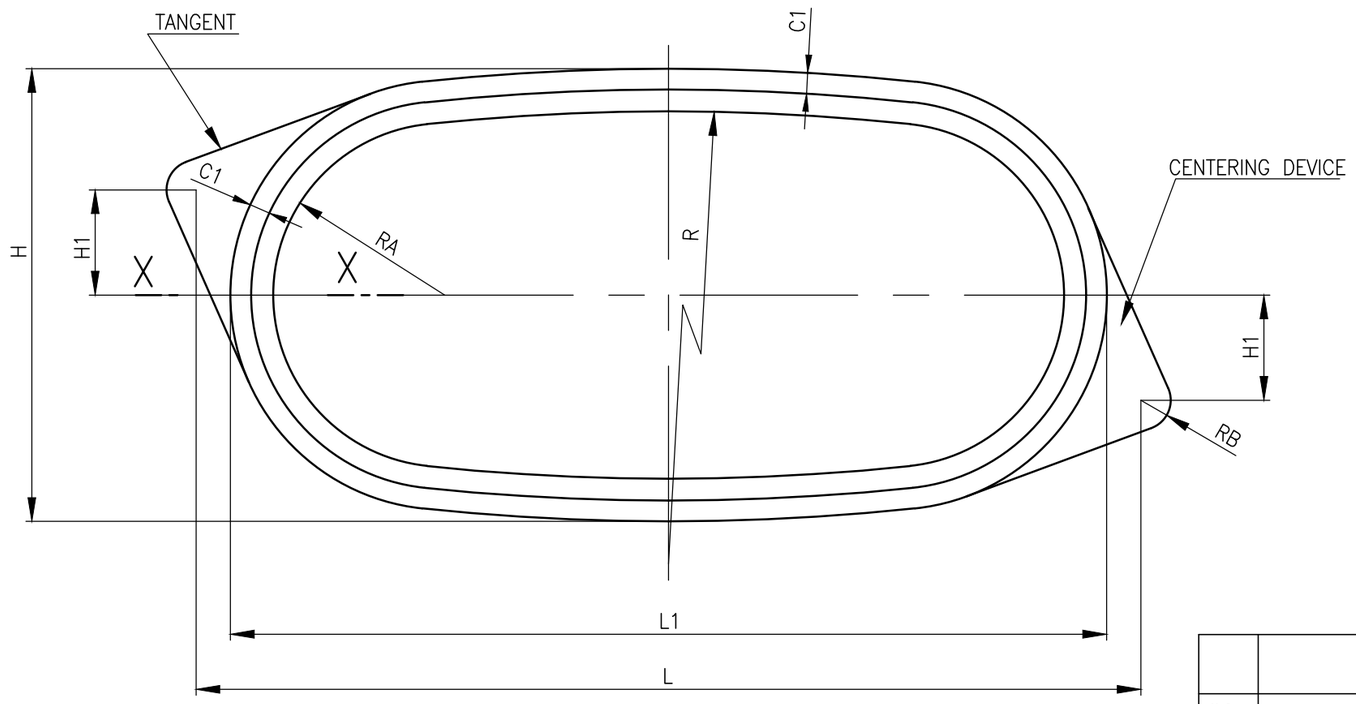


## NOTES:

1. INNER RING OF 316 STAINLESS STEEL SHALL BE PROVIDED.
2. PURCHASE SPECIFICATIONS SHALL BE AS PER APPLICABLE QUALITY WORK INSTRUCTIONS

## WORKING CONDITIONS

PRESSURE– 30kg/cm$^2$(524 PSI)

TEMPERATURE – 45°C TO 550°C

(–50°F TO 1085°F)

## DIMENSIONAL TOLERANCES FOR GASKET

INSIDE DIMENSIONS ±0.5

OUTSIDE DIMENSIONS ±0.5

THICKNESS ±0.13

## MATERIAL:

SPIRAL WOUND GRAFOIL FILLED WITH AISI 316.

## SECTION XX

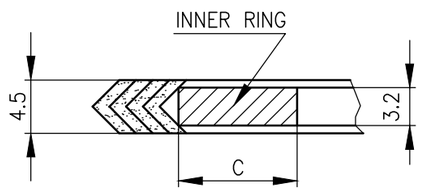


| NO OF | DESCRIPTION | MATL CODE | MATL SPECN | HEAT TREATMENT | SCRAP SORT | NET WT (kg) | GROSS WT (kg) | DRAWING No | ITEM No |
|---|---|---|---|---|---|---|---|---|---|
| | | | | | | | | | |

TYPE OF PRODUCT OR NAME OF CUSTOMER/PROJECT: REDRAWN WITH REV.1 ON 27.10.03

BHARAT HEAVY ELECTRICALS LTD.
UNIT: HIGH PRESSURE BOILER PLANT.
TIRUCHIRAPALLI 620014.
365–121

| | NAME | SIGN | DATE | NO.OF VAR. |
|---|---|---|---|---|
| DRN | V.BAIRAVAN | | 27.10.03 | – |
| CHD | R.L.NARAYANAN | | 27.10.03 | |
| APPD | M.RAJAKUMAR | | 27.10.03 | |

DEPT VL; CODE 320; SCALE NTS.; WEIGHT (KG).; REFERENCE INFORMATIONS CAD:C324014; NO. OF ITEMS –

TITLE: SPIRAL WOUND GASKET; CARD CODE U 01; DRAWING NO. 3–V–0000–24014; REV 2

| REV | DATE | ALTERED | REV | DATE | ALTERED |
|---|---|---|---|---|---|
| 02 | 02.12.14 | MARIMUTHU; CHD & APPD MA & SSK | 1 | 27.10.03 | VB; CHD & APPD MRK |
| | | IN SL. No.02 DIMENSIONS 356, 1028, 65 & 170 WERE 346, 1025.9, 63 & 160 RESPLY. DCP: 801850 | | | SL. No.02 INCLUDED.. |

CAUTION: The information on this document is the property of BHARAT HEAVY ELECTRICALS LTD. It must not be used directly or indirectly in any way detrimental to the interest of the company.

Size A3

ALL DIMENSIONS ARE IN MILLIMETRES. FOR TOLERANCES OF UNTOLERANCED DIMENSIONS DURING MANUFACTURE REFER RELEVANT QCP / QP.

DRAWING NO. 3-V-0000-24458

| SL. NO. | DRAWING NO. | COMPONENT CODE | DIMENSIONS øD | DIMENSIONS ød | DIMENSIONS t | NET WT.(KG) |
|---|---|---|---|---|---|---|
| 01 | 3-V-0540-24458 | 96 465 231 0000 | 109±0.5 | 95±0.5 | 1.6±0.13 | 0.01 |
| 02 | 3-V-1497-24458 | 96 465 232 0000 | $24^{0}_{-0.1}$ | $17^{+0.1}_{0}$ | 1.6±0.13 | 0.001 |
| 03 | 3-V-A803-24458 | 96 465 233 0000 | 107±0.5 | 57±0.5 | 1.6±0.13 | 0.03 |
| 04 | 3-V-A892-24458 | 96 465 234 0000 | 136.7±0.5 | 88.9±0.5 | 1.6±0.13 | 0.03 |
| 05 | 3-V-A893-24458 | 96 465 235 0000 | 174.8±0.5 | 114.3±0.5 | 1.6±0.13 | 0.05 |
| 06 | 3-V-A894-24458 | 96 465 236 0000 | 222.3±0.5 | 168.2±0.5 | 1.6±0.13 | 0.06 |
| 07 | 3-V-A895-24458 | 96 465 237 0000 | 279.4±0.5 | 219±0.5 | 1.6±0.13 | 0.09 |
| 08 | 3-V-A896-24458 | 96 465 238 0000 | 339.9±0.5 | 273.1±0.5 | 3±0.18 | 0.25 |
| 09 | 3-V-A897-24458 | 96 465 239 0000 | 409.7±0.5 | 323.9±0.5 | 3±0.18 | 0.38 |
| 10 | 3-V-A899-24458 | 96 465 240 0000 | 514.4±0.5 | 406.4±0.5 | 3±0.18 | 0.60 |
| 11 | 3-V-A901-24458 | 96 465 241 0000 | 606.6±0.5 | 508±0.5 | 3±0.18 | 0.67 |
| 12 | 3-V-A902-24458 | 96 465 242 0000 | 717.5±0.5 | 609.6±0.5 | 3±0.18 | 0.87 |
| 13 | 3-V-A905-24458 | 96 465 245 0000 | 180.9±0.5 | 114.3±0.5 | 1.6±0.13 | 0.06 |
| 14 | 3-V-A906-24458 | 96 465 246 0000 | 251±0.5 | 168.2±0.5 | 1.6±0.13 | 0.10 |
| 15 | 3-V-A907-24458 | 96 465 247 0000 | 307.9±0.5 | 219±0.5 | 1.6±0.13 | 0.14 |
| 16 | 3-V-A908-24458 | 96 465 248 0000 | 362±0.5 | 273.1±0.5 | 3±0.18 | 0.34 |
| 17 | 3-V-A909-24458 | 96 465 249 0000 | 422.2±0.5 | 323.9±0.5 | 3±0.18 | 0.44 |
| 18 | 3-V-K246-24458 | 96 465 250 0000 | 111.3±0.5 | 60.5±0.5 | 1.6±0.13 | 0.03 |
| 19 | 3-V-K247-24458 | 96 465 251 0000 | 149.4±0.5 | 88.9±0.5 | 1.6±0.13 | 0.05 |
| 20 | 3-V-K248-24458 | 96 465 252 0000 | 193.5±0.5 | 114.3±0.5 | 1.6±0.13 | 0.08 |
| 21 | 3-V-K249-24458 | 96 465 253 0000 | 266.7±0.5 | 168.2±0.5 | 1.6±0.13 | 0.14 |
| 22 | 3-V-K250-24458 | 96 465 254 0000 | 320.5±0.5 | 219±0.5 | 1.6±0.13 | 0.18 |
| 23 | 3-V-K251-24458 | 96 465 255 0000 | 400±0.5 | 273.1±0.5 | 3.0±0.18 | 0.56 |
| 24 | 3-V-5199-24458 | 96 465 256 0000 | $28^{0}_{-0.1}$ | $22^{+0.1}_{0}$ | 1.6±0.13 | 0.001 |
| 25 | 3-V-5197-24458 | 96 465 257 0000 | $36^{0}_{-0.1}$ | $28^{+0.1}_{0}$ | 1.6±0.13 | 0.002 |
| 26 | 3-V-Z001-24458 | 96 465 258 0000 | $42^{0}_{-0.1}$ | $33^{+0.1}_{0}$ | 1.6±0.13 | 0.002 |
| 27 | 3-V-N436-24458 | 96 465 631 0000 | 540.0±0.5 | 406.0±0.5 | 4.5±0.18 | 0.58 |
| 28 | 3-V-N845-24458 | 96 465 309 0000 | $451^{0}_{-3.0}$ | 356.0±3.0 | 3.0±0.18 | 0.50 |

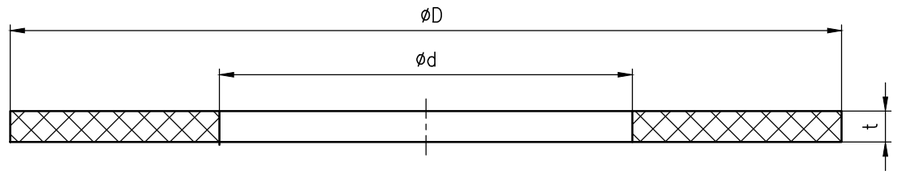


## NOTES:-

1. FOR QUALITY REQUIREMENTS REFER LATEST APPLICABLE QUALITY PROCEDURE.
2. MATERIAL: GRAFOIL

| REV | DATE | ALTERED | |
|---|---|---|---|
| 03 | 01.03.17 | T.SANGEETHA | CHD & APPD SSK & KRS |
| | SL. No. 28 INCLUDED. | | |
| 02 | 14.11.14 | A.MARIMUTHU | CHD & APPD MS & SSK |
| | SL. No. 27 INCLUDED. | | |
| 01 | 01.11.07 | T.R.RAMAMURTHY | CHD & APPD P.BOOMINATHAN |
| | COMPONENT CODES 96465243 AND 96465244 DELETED FOR UNIFICATION | | |

CAUTION: The information on this document is the property of BHARAT HEAVY ELECTRICALS LTD. It must not be used directly or indirectly in any way detrimental to the interest of the company.

| NO OFF | DESCRIPTION | MATL CODE | MATL SPECN | HEAT TREATMENT | SCRAP SORT | NET WT (kg) | GROSS WT (kg) | DRAWING No | ITEM No |
|---|---|---|---|---|---|---|---|---|---|
| – | – | – | – | – | – | – | – | – | – |

TYPE OF PRODUCT OR NAME OF CUSTOMER/PROJECT: CS

BHARAT HEAVY ELECTRICALS LTD.
UNIT: HIGH PRESSURE BOILER PLANT.
TIRUCHIRAPALLI 620014.
365-121

| | NAME | SIGN | DATE | NO.OF VAR. |
|---|---|---|---|---|
| DRN | T.R.RAMAMURTHY | | 14.05.07 | |
| CHD | T.R.RAMAMURTHY | | 14.05.07 | |
| APPD | P.BOOMINATHAN | | 14.05.07 | |

DEPT: VL
CODE: 320
SCALE: N T S
WEIGHT (KG): REF. TABLE
REFERENCE INFORMATIONS: CAD REF: C324458
NO. OF ITEMS

TITLE: GASKET (GRAFOIL)
CARD CODE: U 01
DRAWING NO.: 3-V-0000-24458
REV: 03

Size A3

ALL DIMENSIONS ARE IN MILLIMETRES. FOR TOLERANCES OF UNTOLERANCED DIMENSIONS DURING MANUFACTURE REFER RELEVANT QCP / QP.

DRAWING NO. 3-V-0000-24458

| SL. NO. | DRAWING NO. | COMPONENT CODE | DIMENSIONS øD | DIMENSIONS ød | DIMENSIONS t | NET WT.(KG) |
|---|---|---|---|---|---|---|
| 01 | 3-V-0540-24458 | 96 465 231 0000 | 109±0.5 | 95±0.5 | 1.6±0.13 | 0.01 |
| 02 | 3-V-1497-24458 | 96 465 232 0000 | $24^{0}_{-0.1}$ | $17^{+0.1}_{0}$ | 1.6±0.13 | 0.001 |
| 03 | 3-V-A803-24458 | 96 465 233 0000 | 107±0.5 | 57±0.5 | 1.6±0.13 | 0.03 |
| 04 | 3-V-A892-24458 | 96 465 234 0000 | 136.7±0.5 | 88.9±0.5 | 1.6±0.13 | 0.03 |
| 05 | 3-V-A893-24458 | 96 465 235 0000 | 174.8±0.5 | 114.3±0.5 | 1.6±0.13 | 0.05 |
| 06 | 3-V-A894-24458 | 96 465 236 0000 | 222.3±0.5 | 168.2±0.5 | 1.6±0.13 | 0.06 |
| 07 | 3-V-A895-24458 | 96 465 237 0000 | 279.4±0.5 | 219±0.5 | 1.6±0.13 | 0.09 |
| 08 | 3-V-A896-24458 | 96 465 238 0000 | 339.9±0.5 | 273.1±0.5 | 3±0.18 | 0.25 |
| 09 | 3-V-A897-24458 | 96 465 239 0000 | 409.7±0.5 | 323.9±0.5 | 3±0.18 | 0.38 |
| 10 | 3-V-A899-24458 | 96 465 240 0000 | 514.4±0.5 | 406.4±0.5 | 3±0.18 | 0.60 |
| 11 | 3-V-A901-24458 | 96 465 241 0000 | 606.6±0.5 | 508±0.5 | 3±0.18 | 0.67 |
| 12 | 3-V-A902-24458 | 96 465 242 0000 | 717.5±0.5 | 609.6±0.5 | 3±0.18 | 0.87 |
| 13 | 3-V-A905-24458 | 96 465 245 0000 | 180.9±0.5 | 114.3±0.5 | 1.6±0.13 | 0.06 |
| 14 | 3-V-A906-24458 | 96 465 246 0000 | 251±0.5 | 168.2±0.5 | 1.6±0.13 | 0.10 |
| 15 | 3-V-A907-24458 | 96 465 247 0000 | 307.9±0.5 | 219±0.5 | 1.6±0.13 | 0.14 |
| 16 | 3-V-A908-24458 | 96 465 248 0000 | 362±0.5 | 273.1±0.5 | 3±0.18 | 0.34 |
| 17 | 3-V-A909-24458 | 96 465 249 0000 | 422.2±0.5 | 323.9±0.5 | 3±0.18 | 0.44 |
| 18 | 3-V-K246-24458 | 96 465 250 0000 | 111.3±0.5 | 60.5±0.5 | 1.6±0.13 | 0.03 |
| 19 | 3-V-K247-24458 | 96 465 251 0000 | 149.4±0.5 | 88.9±0.5 | 1.6±0.13 | 0.05 |
| 20 | 3-V-K248-24458 | 96 465 252 0000 | 193.5±0.5 | 114.3±0.5 | 1.6±0.13 | 0.08 |
| 21 | 3-V-K249-24458 | 96 465 253 0000 | 266.7±0.5 | 168.2±0.5 | 1.6±0.13 | 0.14 |
| 22 | 3-V-K250-24458 | 96 465 254 0000 | 320.5±0.5 | 219±0.5 | 1.6±0.13 | 0.18 |
| 23 | 3-V-K251-24458 | 96 465 255 0000 | 400±0.5 | 273.1±0.5 | 3.0±0.18 | 0.56 |
| 24 | 3-V-5199-24458 | 96 465 256 0000 | $28^{0}_{-0.1}$ | $22^{+0.1}_{0}$ | 1.6±0.13 | 0.001 |
| 25 | 3-V-5197-24458 | 96 465 257 0000 | $36^{0}_{-0.1}$ | $28^{+0.1}_{0}$ | 1.6±0.13 | 0.002 |
| 26 | 3-V-Z001-24458 | 96 465 258 0000 | $42^{0}_{-0.1}$ | $33^{+0.1}_{0}$ | 1.6±0.13 | 0.002 |
| 27 | 3-V-N436-24458 | 96 465 631 0000 | 540.0±0.5 | 406.0±0.5 | 4.5±0.18 | 0.58 |
| 28 | 3-V-N845-24458 | 96 465 309 0000 | $451^{0}_{-3.0}$ | 356.0±3.0 | 3.0±0.18 | 0.50 |

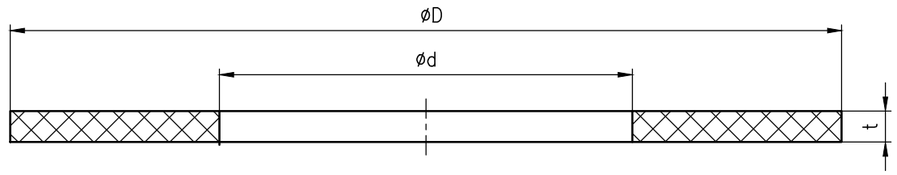


## NOTES:-

1. FOR QUALITY REQUIREMENTS REFER LATEST APPLICABLE QUALITY PROCEDURE.
2. MATERIAL: GRAFOIL

| REV | DATE | ALTERED | |
|---|---|---|---|
| 03 | 01.03.17 | T.SANGEETHA | CHD & APPD SSK & KRS |
| | SL. No. 28 INCLUDED. | | |
| 02 | 14.11.14 | A.MARIMUTHU | CHD & APPD MS & SSK |
| | SL. No. 27 INCLUDED. | | |
| 01 | 01.11.07 | T.R.RAMAMURTHY | CHD & APPD P.BOOMINATHAN |
| | COMPONENT CODES 96465243 AND 96465244 DELETED FOR UNIFICATION | | |

CAUTION: The information on this document is the property of BHARAT HEAVY ELECTRICALS LTD. It must not be used directly or indirectly in any way detrimental to the interest of the company.

| NO OFF | DESCRIPTION | MATL CODE | MATL SPECN | HEAT TREATMENT | SCRAP SORT | NET WT (kg) | GROSS WT (kg) | DRAWING No | ITEM No |
|---|---|---|---|---|---|---|---|---|---|
| – | – | – | – | – | – | – | – | – | – |

TYPE OF PRODUCT OR NAME OF CUSTOMER/PROJECT: CS

BHARAT HEAVY ELECTRICALS LTD.
UNIT: HIGH PRESSURE BOILER PLANT.
TIRUCHIRAPALLI 620014.
365-121

| | NAME | SIGN | DATE | NO.OF VAR. |
|---|---|---|---|---|
| DRN | T.R.RAMAMURTHY | | 14.05.07 | |
| CHD | T.R.RAMAMURTHY | | 14.05.07 | |
| APPD | P.BOOMINATHAN | | 14.05.07 | |

DEPT: VL
CODE: 320
SCALE: N T S
WEIGHT (KG): REF. TABLE
REFERENCE INFORMATIONS: CAD REF: C324458
NO. OF ITEMS

TITLE: GASKET (GRAFOIL)
CARD CODE: U 01
DRAWING NO.: 3-V-0000-24458
REV: 03

Size A3

ALL DIMENSIONS ARE IN MILLIMETRES. FOR TOLERANCES OF UNTOLERANCED DIMENSIONS DURING MANUFACTURE REFER RELEVANT QCP / QP.

DRAWING NO. 3-V-0000-95816

| SL. NO. | DRAWING NO. | COMPONENT CODE | DIMENSIONS | | | NET WT.(KG) | APPLICABLE VALVE PARAMETER | | |
|---|---|---|---|---|---|---|---|---|---|
| | | | øD | ød | t | | SIZE/RATING | MAX.TEMP.-°F | MAX.PR.-PSIG |
| 01 | 3-V-N248-95816/1 | 964568710000 | 250 | 228.5 | 4.5 | 0.14 | 5"/150C GV<br>5"& 6"/300C GV | 1100 | 750 |
| 02 | 3-V-N244-95816/1 | 964568720000 | 310 | 289.5 | 4.5 | 0.16 | 8"/300C GV | 1100 | 750 |
| 03 | 3-V-N235-95816/1 | 964568730000 | 385 | 355.5 | 4.5 | 0.23 | 10"/300C GV | 1100 | 750 |
| 04 | 3-V-N608-95816/1 | 964569340000 | 450.5 | 425.5 | 4.5 | 0.42 | 12"/300C GV | 1100 | 750 |
| 05 | 3-V-Z021-95816/1 | 964608600000 | 595 | 555 | 4.5 | 0.91 | 20"/150C FV | 1100 | 750 |
| 06 | 3-V-Z022-95816/1 | 964608610000 | 514 | 462 | 4.5 | 0.755 | 16"/300C FV | 1100 | 750 |
| 07 | 3-V-Z023-95816/1 | 964608620000 | 422 | 382 | 4.5 | 0.14 | 14"/300C FV | 1100 | 750 |
| 08 | 3-V-U085-95816/1 | 964650630000 | 426 | 402 | 4.5 | 0.38 | 12"/300C FV | 1100 | 750 |
| 09 | 3-V-Z082-95816/1 | 964656210000 | 432 | 394 | 4.5 | 0.40 | 14"/150C FV | 1100 | 750 |
| 10 | 3-V-Z085-95816/1 | 964656220000 | 557 | 519 | 4.5 | 0.89 | 18"/150C FV | 1100 | 750 |
| 11 | 3-V-Z089-95816/1 | 964656300000 | 497 | 458 | 4.5 | 0.75 | 16"/150C FV | 1100 | 750 |
| 12 | 3-V-RV10-95816 | 964657830000 | 165 | 137 | 3.2 | 0.13 | 4"/300C RV (SD) | 1100 | 750 |

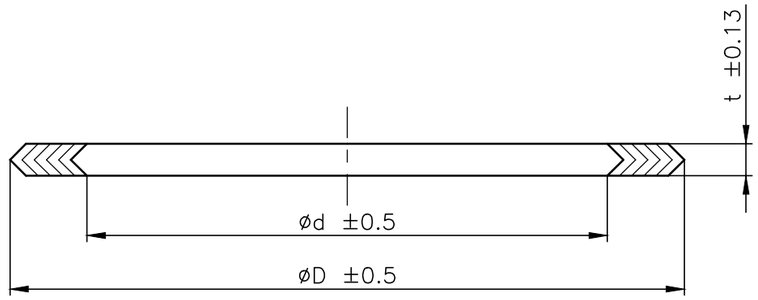


## NOTES:-

01. FOR QUALITY REQUIREMENTS REFER LATEST APPLICABLE QUALITY WORK INSTRUCTION.
02. THESE SPIRAL WOUND GASKETS SHALL WITHSTAND A SERVICE PRESSURE AND SERVICE TEMP. AS REFERRED IN THE TABULATION.
03. MATERIAL : AISI 316 WITH SPIRAL WOUND GRAFOIL FILLED.
04. LEGENDS : GV – WEDGE GATE VLAVE
FV – SWING CHECK VALVE

| NO OFF | DESCRIPTION | MATL CODE | MATL SPECN | HEAT TREATMENT | SCRAP SORT | NET WT (kg) | GROSS WT (kg) | DRAWING No | ITEM No |
|---|---|---|---|---|---|---|---|---|---|
| – | – | – | – | – | – | – | – | – | – |

| REV | DATE | ALTERED | |
|---|---|---|---|
| 06 | 24.11.16 | R.ANITHA | |
| | | CHD & APPD | SSK & KRS |
| | SL.NO. 12 INCLUDED. | | |

| REV | DATE | ALTERED | |
|---|---|---|---|
| 05 | 31.03.16 | K.NAVIN | |
| | | CHD & APPD | MS & SSK |
| | FOR SL.No. 09,10&11 DIMENSION ød 394,519&458 WERE 390,515&457 RESPLY.<br>DCP:802098 | | |

| REV | DATE | ALTERED | |
|---|---|---|---|
| 4 | 29.03.14 | VB | |
| | | CHD & APPD | SSK & KRS |
| | SL.Nos.09 TO 11 INCLUDED. | | |

CAUTION: The information on this document is the property of BHARAT HEAVY ELECTRICALS LTD. It must not be used directly or indirectly in any way detrimental to the interest of the company.

TYPE OF PRODUCT
OR NAME OF
CUSTOMER/PROJECT

REDRAWN WITH REV.4 ON 29.03.14

BHARAT HEAVY ELECTRICALS LTD.,
UNIT: HIGH PRESSURE BOILER PLANT.
TIRUCHIRAPALLI-620014.
365-121

| | NAME | SIGN | DATE | NO.OF VAR. |
|---|---|---|---|---|
| DRN | V.BAIRAVAN | | 29.03.14 | |
| CHD | S.SATHEESKUMAR | | 29.03.14 | |
| APPD | K.RAJASEKARAN | | 29.03.14 | |

| DEPT | SCALE | WEIGHT (KG). | REFERENCE INFORMATIONS | NO. OF ITEMS |
|---|---|---|---|---|
| VL | N T S | REF. TABLE | | |
| CODE 320 | | | | |

| TITLE | CARD CODE | DRAWING NO. | REV |
|---|---|---|---|
| SPIRAL WOUND GASKET<br>(CIRCULAR GRAFOIL FILLED) | U 01 | 3-V-0000-95816 | 06 |

Size A3

ALL DIMENSIONS ARE IN MILLIMETRES. FOR TOLERANCES OF UNTOLERANCED DIMENSIONS DURING MANUFACTURE REFER RELEVANT QCP / QP.

DRAWING NO. 3-V-0000-95989

| SL. NO. | DRAWING NO. | COMPONENT CODE | DIMENSIONS | | | NET WT.(KG) | APPLICABLE VALVE PARAMETER | | |
|---|---|---|---|---|---|---|---|---|---|
| | | | øD | ød | t | | SIZE/RATING | MAX.TEMP.-°F | MAX.PR.-PSIG |
| 01 | 3-V-B001-95989 | 964651180000 | 138 | 120 | 4.5 | 0.12 | 2"/600C GV | 1100 | 1500 |
| 02 | 3-V-5158-95989 | 964651190000 | 146 | 130 | 3.2 | 0.06 | 2"/150C FV | 1100 | 750 |
| 03 | 3-V-2477-95989 | 964651200000 | 102.5 | 90 | 3.2 | 0.03 | 2"/300C GLV | 1100 | 750 |
| 04 | 3-V-2479-95989 | 964651210000 | 159 | 147 | 3.2 | 0.07 | 4"/300C GLV | 1100 | 750 |
| 05 | 3-V-F502-95989 | 964651220000 | 172 | 152 | 4.5 | 0.12 | 3"/600C GV | 1100 | 1500 |
| 06 | 3-V-F503-95989 | 964651230000 | 202 | 182 | 4.5 | 0.14 | 4"/600C GV | 1100 | 1500 |
| 07 | 3-V-F504-95989 | 964651240000 | 258 | 238 | 4.5 | 0.18 | 6"/600C GV | 1100 | 1500 |
| 08 | 3-V-F505-95989 | 964651250000 | 316 | 290 | 4.5 | 0.28 | 8"/600C GV | 1100 | 1500 |
| 09 | 3-V-F506-95989 | 964651260000 | 368 | 336 | 4.5 | 0.41 | 10"/600C GV | 1100 | 1500 |
| 10 | 3-V-F507-95989 | 964651270000 | 444 | 400 | 4.5 | 0.67 | 12"/600C GV | 1100 | 1500 |
| 11 | 3-V-N598-95989 | 964651300000 | 457 | 422 | 4.5 | 0.5 | 14"/300C GV | 1100 | 750 |
| 12 | 3-V-N964-95989 | 964651310000 | 517 | 476 | 4.5 | 0.66 | 16"/300C GV | 1100 | 750 |
| 13 | 3-V-N595-95989 | 964651320000 | 620 | 580 | 4.5 | 0.78 | 20"/300C GV | 1100 | 750 |
| 14 | 3-V-3211-95989 | 964651360000 | 92.0 | 72.0 | 4.5 | 0.05 | 50/65-3000ADV | 1100 | 7500 |
| 15 | 3-V-P366-95989 | 964651890000 | 324 | 304 | 4.5 | 0.22 | 10"/300C GLV | 1100 | 750 |
| 16 | 3-V-P480-95989 | 964652660000 | 316 | 296.5 | 4.5 | 0.18 | 10"/300C GLV | 1100 | 750 |
| 17 | 3-V-NE96-95989 | 964652690000 | 692.5 | 649.5 | 4.5 | 0.63 | 22"/300C GV | 1100 | 750 |
| 18 | 3-V-Z068-95989 | 964653140000 | 304 | 280 | 4.5 | 0.27 | 8"/600C FV | 1100 | 1500 |
| 19 | 3-V-NF97-95989 | 964653380000 | 817 | 764 | 4.5 | 1.47 | 26"/300C GV | 1100 | 750 |
| 20 | 3-V-P560-95989 | 964654060000 | 410 | 382 | 4.5 | 0.34 | 12"/300C RV | 1100 | 750 |
| 21 | 3-V-P538-95989 | 964653160000 | 429.5 | 385.5 | 4.5 | 0.20 | 12"/600C RV | 1100 | 1500 |
| 22 | 3-V-NH51-95989 | 964654860000 | 556.3 | 524.3 | 4.5 | 0.6 | 16"/300C RV | 1100 | 750 |
| 23 | 3-V-NH52-95989 | 964654960000 | 568 | 508 | 4.5 | 0.7 | 16"/600C RV | 1100 | 1500 |
| 24 | 3-V-Z077-95989 | 964655030000 | 1126 | 1069 | 4.5 | 1.75 | 38"/300C FV | 1100 | 1500 |
| 25 | 3-V-ZA77-95989 | 964655040000 | 142 | 122 | 3.2 | 0.05 | 38"/300C FV | 1100 | 1500 |
| 26 | 3-V-NH50-95989 | 964655020000 | 459.5 | 406.5 | 4.5 | 0.96 | 14"/600C RV | 1100 | 1500 |
| 27 | 3-V-BA51-95989 | 964655150000 | 360 | 334 | 4.5 | 0.43 | 8"/300C BV | 1100 | 750 |
| 28 | 3-V-NK44-95989 | 964659000000 | 860 | 810 | 4.5 | 1.4 | 28"/300C GV | 1100 | 750 |

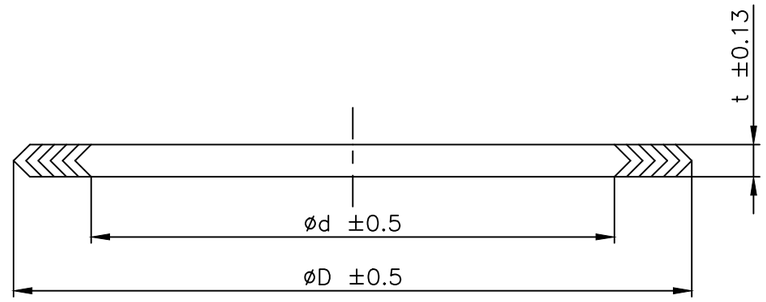


NOTES:-

01. FOR QUALITY REQUIREMENTS REFER LATEST APPLICABLE QUALITY WORK INSTRUCTION.
02. THESE SPIRAL WOUND GASKETS SHALL WITHSTAND A SERVICE PRESSURE AND SERVICE TEMP. AS REFERRED IN THE TABULATION.
03. MATERIAL : AISI 316 WITH GRAFOIL FILLED.
04. LEGENDS : GV – WEDGE GATE VLAVE
FV – SWING CHECK VALVE
GLV – GLOBE VALVE
ADV – ANGLE DRAIN VALVE
RV – REGULATING VALVE

| NO OFF | DESCRIPTION | MATL CODE | MATL SPECN | HEAT TREATMENT | SCRAP SORT | NET WT (kg) | GROSS WT (kg) | DRAWING No | ITEM No |
|---|---|---|---|---|---|---|---|---|---|
| – | – | – | – | – | – | – | – | – | – |

| REV | DATE | ALTERED | REV | DATE | ALTERED |
|---|---|---|---|---|---|
| 11 | 15.02.19 | R.P.SINGH<br>CHD & APPD SSK & KRS<br>SL.No. 28 INCLUDED. | 10 | 20.06.13 | DEEPAKRAJ<br>CHD & APPD DEEPAKRAJ & KRS<br>SL.Nos.27 INCLUDED. |

CAUTION: The information on this document is the property of BHARAT HEAVY ELECTRICALS LTD. It must not be used directly or indirectly in any way detrimental to the interest of the company.

TYPE OF PRODUCT OR NAME OF CUSTOMER/PROJECT: REDRAWN WITH REV.06 ON 29.10.2009

BHARAT HEAVY ELECTRICALS LTD.,
UNIT: HIGH PRESSURE BOILER PLANT.
TIRUCHIRAPALLI-620014.
365-121

| | NAME | SIGN | DATE | NO.OF VAR. |
|---|---|---|---|---|
| DRN | K.P.LEON | | 22.04.02 | |
| CHD | P.BOOMINATHAN | | 22.04.02 | |
| APPD | K.S.RAMAN | | 22.04.02 | |

DEPT VL
CODE 320
SCALE N T S
WEIGHT (KG). REF. TABLE
REFERENCE INFORMATIONS: CAD REF: C395989
NO. OF ITEMS

TITLE: SPIRAL WOUND GASKET (CIRCULAR GRAFOIL FILLED)
CARD CODE: U 01
DRAWING NO. 3-V-0000-95989
REV 11

Size A3

ALL DIMENSIONS ARE IN MILLIMETRES. FOR TOLERANCES OF UNTOLERANCED DIMENSIONS DURING MANUFACTURE REFER RELEVANT QCP / QP.

DRAWING NO. 3-V-0000-17142/10

| SL No. | DRAWING No. | MATERIAL CODE | DIMENSIONS øD | DIMENSIONS ød | DIMENSIONS t | | FINISHED WEIGHT(Kgs.) | SIZE/RATING | APPLICABLE VALVE PARAMETER MAX.TEMP.-°F | APPLICABLE VALVE PARAMETER MAX.PR.-PSIG |
|---|---|---|---|---|---|---|---|---|---|---|
| 01. | 3-V-B001-17142/01 | 96 456 381 0000 | 138 | 120 | 4.5 | | 0.12 | 2"/600C GLV | 1100 | 1500 |
| 02. | 3-V-5158-17142/01 | 96 456 445 0000 | 146 | 130 | 3.2 | | 0.06 | 2"/150C GLV | 1100 | 750 |
| 03. | 3-V-2477-17142/01 | 96 456 444 0000 | 102.5 | 90 | 3.2 | | 0.03 | 2"/300C GLV | 1100 | 750 |
| 04. | 3-V-2479-17142/01 | 96 456 496 0000 | 159 | 147 | 3.2 | | 0.07 | 4"/300C SV | 1100 | 750 |
| 05 | 3-V-B003-17142/02 | 96 456 522 0000 | 194 | 170 | 4.5 | | 0.10 | 4"/600C GV | 1100 | 1500 |
| 06 | 3-V-M471-17142/01 | 96 456 692 0000 | 480 | 436 | 4.5 | | 0.5 | 12"/600C | 1100 | 1500 |
| 07 | 3-V-M484-17142/01 | 96 456 697 0000 | 252.5 | 232 | 3.2 | | 0.125 | 6"150C FV | 1100 | 750 |
| 08 | 3-V-M485-17142/01 | 96 456 698 0000 | 122 | 110 | 3.2 | | 0.035 | 3"/300C SV | 1100 | 750 |
| 09 | 3-V-L781-17142 | 96 460 747 0000 | 507 | 467 | 4.5 | | 0.60 | 16"/150CL QN | 1100 | 750 |
| 10 | 3-V-L782-17142 | 96 460 748 0000 | 98 | 82 | 3.2 | | 0.10 | 16"/150CL QN | 1100 | 750 |
| 11 | 3-V-2925-17142 | 96 456 784 0000 | 271 | 257 | 3.2 | | 0.3 | 8"/300 GV | 1100 | 750 |
| 12 | 3-V-B684-17142 | 96 456 783 0000 | 168.5 | 152 | 4.5 | | 0.2 | 3"/600C GV | 1100 | 1500 |
| 13 | 3-V-B678-17142 | 96 456 771 0000 | 334 | 310 | 4.5 | | 0.2 | 8"/600C GV | 1100 | 1500 |
| 14 | 3-V-B679-17142 | 96 456 772 0000 | 272 | 248 | 4.5 | | 0.16 | 6"/600C GV | 1100 | 1500 |
| 15. | 3-V-B682-17142 | 96 456 773 0000 | 402 | 370 | 4.5 | | 0.31 | 10"/600C GV | 1100 | 1500 |
| 16 | 3-V-N598 17142 | 96 456 774 0000 | 457 | 422 | 4.5 | | 0.5 | 14"/300C GV | 1100 | 750 |
| 17 | 3-V-N964-17142 | 96465016 0000 | 517 | 476 | 4.5 | | 0.66 | 16"/300c GV | 1100 | 750 |
| 18 | 3-V-N595-17142 | 964650290000 | 620 | 580 | 4.5 | | 0.78 | 20"/300c GV | 1100 | 750 |

## NOTE

01. FOR QUALITY REQUIREMENTS REFER LATEST APPLICABLE QUALITY PROCEDURE
02. THESE SPIRAL WOUND GASKET SHALL WITHSTAND A SERVICE PRESSURE AND SERVICE TEMP. AS REFERED IN THE TABULATION.
03. THESE SPIRAL WOUND GASKETS ARE APPLICABLE FOR CARBON STEEL (WCB,WCC) & ALLOY STEEL (WC6,WC9) VALVES OF ABOVE PARAMETER AND THEIR ALLIED VALVES.
04. MATERIAL : AISI TYPE 304 WITH SPIRAL WOUND GRAFOIL FILLED.

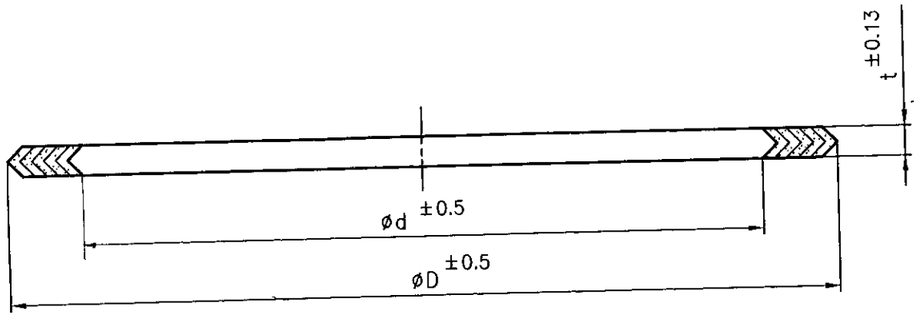


RETRACED WITH 07 REVISION ON 31-12-96

| NO OFF | DESCRIPTION | MATL CODE | MATL SPECN | HEAT TREATMENT | SCRAP SORT | NET WT (kg) | GROSS WT (kg) | DRAWING No. | ITEM No |
|---|---|---|---|---|---|---|---|---|---|
| | | | | | | | | | |

TYPE OF PRODUCT
OR NAME OF
CUSTOMER/PROJECT

BHARAT HEAVY ELECTRICALS LTD.,
UNIT: HIGH PRESSURE BOILER PLANT.
TIRUCHIRAPALLI-620014.

| | NAME | SIGN | DATE | NO.OF VAR. |
|---|---|---|---|---|
| DRN | R.THIRUGNANAM | R.Thirugnanam | 31.12.96 | |
| CHD | N.DHANAPAL | N.Dhanapal | 31.12.96 | |
| APPD | A.V.NATHAN | | 31.12.96 | |

DEPT VL
CODE 320
SCALE NTS
WEIGHT (KG). REF TABLE
REFERENCE INFORMATIONS CAD:C317142
NO. OF ITEMS

TITLE SPIRAL WOUND GASKET (CIRCULAR GRAFOIL FILLED)
CARD CODE U 01
DRAWING NO. 3-V-0000-17142
REV 10

Size A3

| REV. | DATE | ALT. | REV. | DATE | ALT. | REV | DATE | ALTERED |
|---|---|---|---|---|---|---|---|---|
| 10 | 3.7.2000 | R.L. CHE.& APPD. M.R.K. | 09 | 21.2.2000 | R.L. CHE.& APPD. M.R.K. | 08 | 31.12.96 | R.Thirugnanam.S CHD & APPD |
| SL.No. 18 INCLUDED. | | | SL.No. 17 INCLUDED. | | | 1. SL.NO. 09 & 16 INCLUDED. | | |

CAUTION: The information on this document is the property of BHARAT HEAVY ELECTRICALS LTD. It must not be used directly or indirectly in any way detrimental to the interest of the company.

ALL DIMENSIONS ARE IN MILLIMETRES. FOR TOLERANCES OF UNTOLERANCED DIMENSIONS DURING MANUFACTURE REFER RELEVANT QCP / QP.

DRAWING NO. 3-V-0000-23423 /2

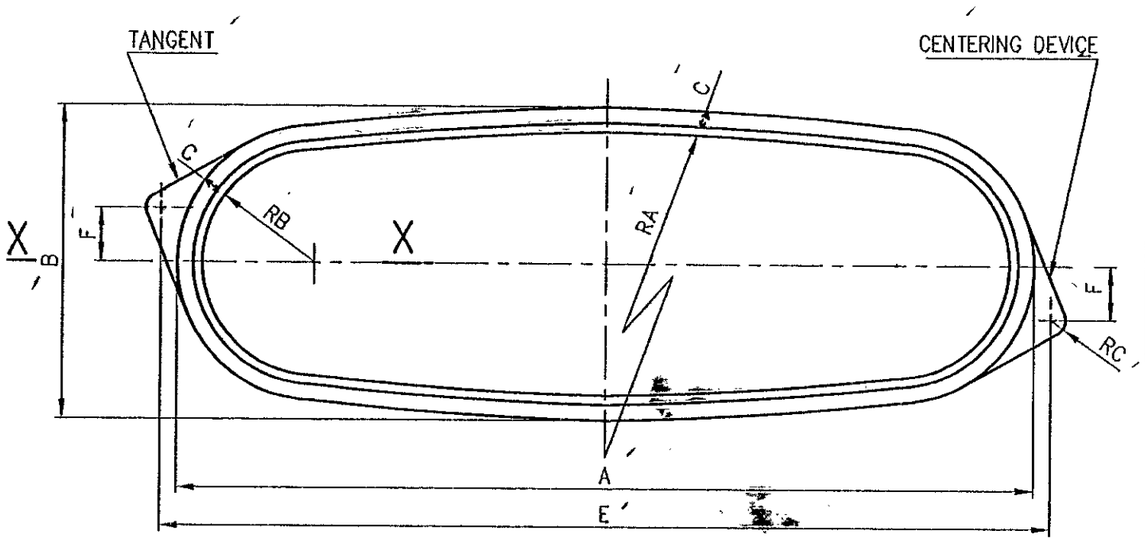


| SL. No. | DRAWING No. | MATL. CODE | DIMENSIONS | | | | | | | | | | NET WT.(Kg) | SIZE/ RATING |
|---|---|---|---|---|---|---|---|---|---|---|---|---|---|---|
| | | | A | B | C | RA | RB | RC | F | E | L | | | |
| 01 | 3-V-N738-23423/1 | 964569780000 | 746 | 278 | 10 | 1362 | 97 | 13.5 | 48 | 794 | 5 | | 0.38 | 24"/150CL |
| 02 | 3-V-N730-23423 | 964536080000 | 569 | 239 | 9 | 903.64 | 84 | 13.5 | 61.9 | 597.8 | 5 | | 0.34 | 18"/150CL |
| 03 | 3-V-N805-23423 | 964536470000 | 750 | 304 | 10 | 1137 | 105 | 13.5 | 48 | 794 | 5 | | 0.38 | 24"/150CL |
| | | | | | | | | | | | | | | |
| | | | | | | | | | | | | | | |
| | | | | | | | | | | | | | | |
| | | | | | | | | | | | | | | |

## SECTION XX

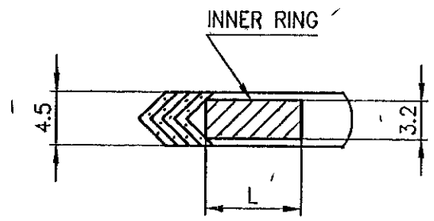


## NOTES:

1. MATERIAL: SPIRAL WOUND GRAFOIL FILLED WITH AISI 316.
2. INNER RING OF 316 STAINLESS STEEL SHALL BE PROVIDED.
3. PURCHASE SPECIFICATIONS SHALL BE AS PER LATEST VL:STDC:022

### DIMENSIONAL TOLERANCES FOR GASKET

INSIDE DIMENSIONS ±0.5
OUTSIDE DIMENSIONS ±0.5
THICKNESS ±0.13

### WORKING CONDITIONS

PRESSURE 30Kg/cm$^2$(524 PSI)
TEMPERATURE -45°C TO 550°C(-50°F TO 1025°F)

RETRACED WITH REV. 1 ON 8.3.99

| NO OFF | DESCRIPTION | MATL CODE | MATL SPECN | HEAT TREATMENT | SCRAP SORT | NET WT (kg) | GROSS WT (kg) | DRAWING No | ITEM No |
|---|---|---|---|---|---|---|---|---|---|
| | | | | | | | | | |

| REV. | DATE | ALT. R.L. |
|---|---|---|
| 2 | 18.5.99 | CHR & APPD M.R.K. |

SL. No. 03 INCLUDED.

| REV | DATE | ALTERED R.L. |
|---|---|---|
| 1 | 8.03.99 | CHD & APPD M.R.K |

DIMENSION 746 WAS 764 IN SL. No. 01.
SL. No.02 INCLUDED
DCN No. HM 0378

CAUTION: The information on this document is the property of BHARAT HEAVY ELECTRICALS LTD. It must not be used directly or indirectly in any way detrimental to the interest of the company.

TYPE OF PRODUCT
OR NAME OF
CUSTOMER/PROJECT

BHARAT HEAVY ELECTRICALS LTD.,
UNIT: HIGH PRESSURE BOILER PLANT.
TIRUCHIRAPALLI-620014.
365-121

| | NAME | SIGN | DATE | NO. OF VAR. |
|---|---|---|---|---|
| DRN | V.BAIRAVAN | | 8/3/99 | |
| CHD | R.L.NARAYANAN | | 08.03.99 | |
| APPD | M.RAJAKUMAR | | 08/03/99 | |

DEPT VL
CODE 320
SCALE NTS
WEIGHT (KG).
REFERENCE INFORMATIONS
NO. OF ITEMS

TITLE
SPIRAL WOUND GASKET
(GRAFOIL)

CARD CODE U 01

DRAWING NO. 3-V-0000-23423

REV 2

Size A3

ALL DIMENSIONS ARE IN MILLIMETRES. FOR TOLERANCES OF UNTOLERANCED DIMENSIONS DURING MANUFACTURE REFER RELEVANT QCP / QP.

DRAWING NO. 3-V-0000-23660

| SL. No. | DRAWING No. | MATL. CODE | DIMENSIONS A | B | C | R | L | H | t | | | | NET WT.(Kg) | SIZE/ RATING |
|---|---|---|---|---|---|---|---|---|---|---|---|---|---|---|
| 01 | 3-V-N827-23660 | 964650440000 | 956 | 333.7 | 27 | 88 | 390 | 58.15 | 4.5 | | | | 0.22 | 32"/150CL |
| 02 | 3-V-N846-23660 | 964650450000 | 1054 | 380 | 28 | 113 | 414 | 55.4 | 4.5 | | | | 0.29 | 36"/150CL |

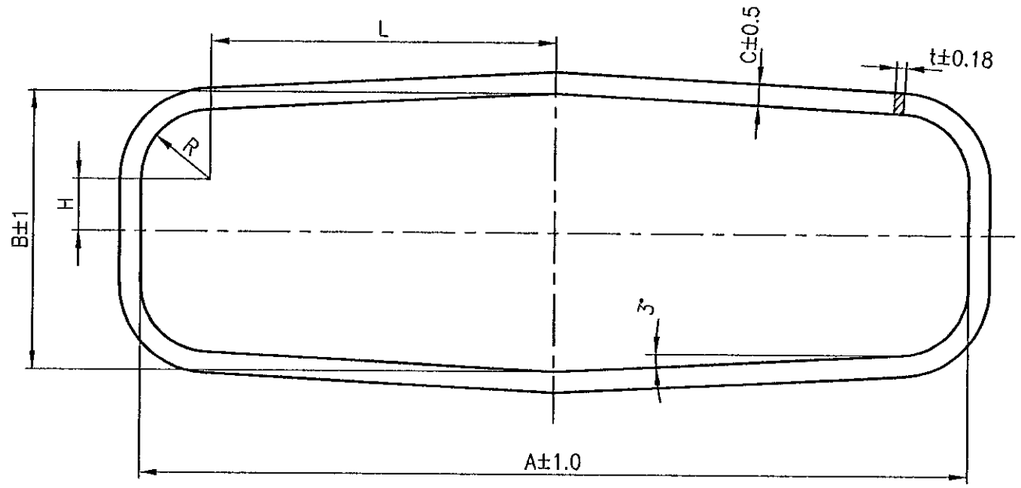


| SL. No. | SUPPLIER | MODEL No. |
|---|---|---|
| 01 | M/S. J.D.JONES | PACMANN® NA709 |

RECOMMENDED SUPPLIERS

| NO OFF | DESCRIPTION | MATL CODE | MATL SPECN | HEAT TREATMENT | SCRAP SORT | NET WT (kg) | GROSS WT (kg) | DRAWING No | ITEM No |
|---|---|---|---|---|---|---|---|---|---|

NOTE:

1. MATERIAL: GRAPHITE FOIL HAVING 99.9% CARBON WITH S.S.WIRE NET
2. MAXIMUM WORKING PRESSURE :35Kg/CM$^2$
3. MAXIMUM WORKING TEMPERATURE :550°C

| REV | DATE | ALTERED |
|---|---|---|
| | | CHD & APPD |

CAUTION: The information on this document is the property of BHARAT HEAVY ELECTRICALS LTD. It must not be used directly or indirectly in any way detrimental to the interest of the company.

TYPE OF PRODUCT
OR NAME OF
CUSTOMER/PROJECT

BHARAT HEAVY ELECTRICALS LTD.,
UNIT: HIGH PRESSURE BOILER PLANT.
TIRUCHIRAPALLI-620014.
365-121

| | NAME | SIGN | DATE |
|---|---|---|---|
| DRN | V.BAIRAVAN | | 4/8/2K |
| CHD | R.L.NARAYANAN | | 4/8/2000 |
| APPD | M.RAJAKUMAR | | 4/8/2K |

NO.OF VAR.

DEPT VL
CODE 320
SCALE NTS
WEIGHT (KG).
REFERENCE INFORMATIONS
NO. OF ITEMS

TITLE: BODY-BONNET GASKET
CARD CODE: U 01
DRAWING NO. 3-V-0000-23660
REV 0

Size A3

FOR TOLERANCES OF UNTOLERANCED DIMENSIONS DURING MANUFACTURE REFER RELEVANT QCP/QP

| REV | DATE | ALTD: | REV. | DATE | ALT. R.L. |
|---|---|---|---|---|---|
| 04 | 10-01-97 | CHKD&APPD. M.R.K. | 06 | 27.1.98 | CHE.& APPD. M.R.K. |
| SL.NOS. 8 & 9 INCLUDED. | | | SL.NOS. 11&12 INCLUDED. | | |
| REV. | DATE | ALT. R.L. | REV. | DATE | ALT. R.L. |
| 05 | 26.2.97 | CHE.&APPD. M.R.K. | 07 | 21.2.2000 | CHE.& APPD. M.R.K. |
| SL.NO.10 INCLUDED. | | | SL.No. 13 INCLUDED. | | |

15

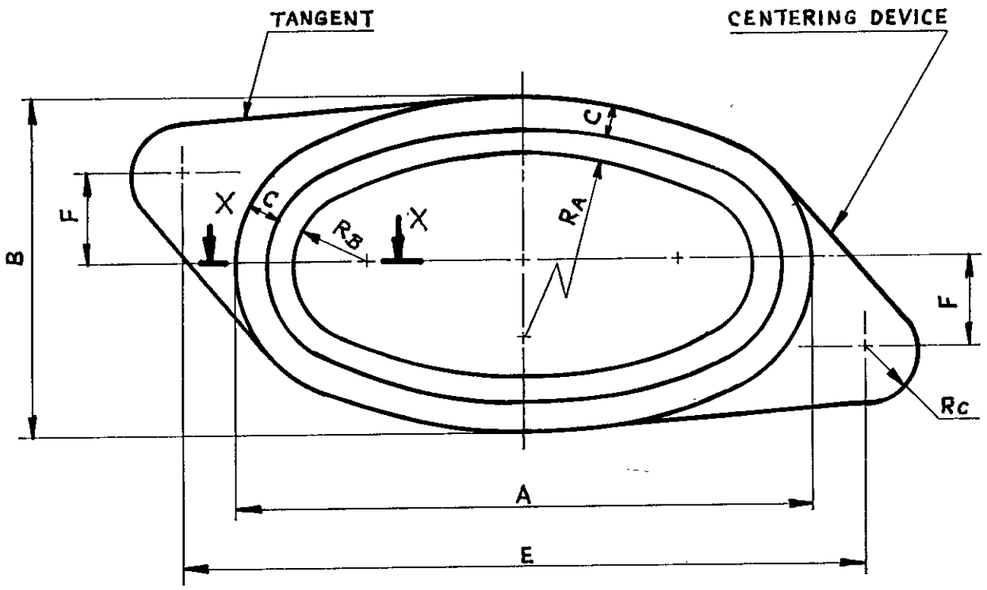


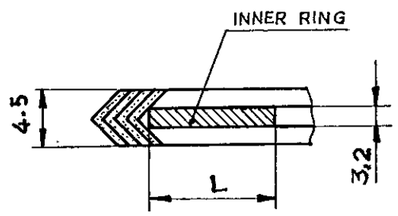


**SECTION-XX**

| SL. No. | DRAWING No. | MATL. CODE | DIMENSIONS A | B | C | RA | RB | Rc | F | E | L | | NET WT. (kg) | SIZE/RATING |
|---|---|---|---|---|---|---|---|---|---|---|---|---|---|---|
| 1 | 3-V-N073-95038/3 | 96456 207 | 130 | 90 | 5 | 94 | 29 | 8 | 0 | 154 | 6 | | 0.15 | 2"/150 |
| 2 | 3-V-N025-95038/3 | 96 456 208 | 164 | 114 | 7 | 129 | 37 | 10 | 0 | 194 | 8 | | 0.17 | 3"/150 |
| 3 | 3-V-N033-95038/3 | 96 456 209 | 197 | 117 | 8 | 349.1 | 39.5 | 10 | 37 | 209 | 8 | | 0,18 | 4"/150 |
| 4 | 3-V-N001-95038/3 | 96 456 250 | 246 | 128 | 8 | 397 | 42 | 10 | 0 | 284 | 8 | | 0,20 | 6"/150 |
| 5 | 3-V-N009-95038/3 | 96 456 251 | 306 | 142 | 8 | 807 | 48 | 10 | 35.5 | 328 | 10 | | 0,22 | 8"/150 |
| 6 | 3-V-N057-95038/3 | 96 456 252 | 380 | 170 | 10 | 721 | 55 | 12.5 | 43.5 | 408 | 10 | | 0,25 | 10"/150 |
| 7 | 3-V-N041-95038/3 | 96 456 253 | 438 | 187 | 10 | 829 | 61 | 12.5 | 0 | 488 | 10 | | 0,30 | 12"/150 |
| 8 | 3-V-N596-95038 | 96 456 775 | 528 | 214 | 10 | 1479.5 | 80 | 13.5 | 46,6 | 589,6 | 7 | | 0,33 | 16"/C150 |
| 9 | 3-V-N597-95038 | 96 456 776 | 682 | 244 | 12 | 1464 | 82 | 12,7 | 55,9 | 736,7 | 7 | | 0,36 | 20"/C150 |
| 10 | 3-V-C545-95038 | 96 456 770 | 612 | 254 | 12 | 1049.8 | 87 | 13 | 51 | 640 | 7 | | 0.24 | 16"/150C |
| 11 | 3-V-N702-95038 | 96 456 878 | 474 | 204 | 10 | 1395 | 77 | 13.5 | 59.3 | 529 | 7 | | 0.31 | 14"/150C |
| 12 | 3-V-N705-95038 | 96456 879 | 764 | 254 | 14 | 6862.5 | 100 | 13.5 | 47.9 | 793.8 | 8 | | 0.38 | 24"/150C |
| 13 | 3-V-U013-95038 | 96465 015 | 569 | 239 | 9 | 903.64 | 84 | 13.5 | 61.9 | 597.8 | 5 | | 0.34 | 18"/150C |

**DIMENSIONAL TOLERANCES FOR GASKET**

| | |
|---|---|
| INSIDE DIMENSIONS | ± 0.5 |
| OUTSIDE DIMENSIONS | ± 0.5 |
| THICKNESS | ± 0.13 |

**WORKING CONDITIONS**

PRESSURE - 30 KG/CM$^2$ (524 PSI)

TEMPERATURE - 45° TO 550°C (-50° TO 1025°F)

MATERIAL : SPIRAL WOUND GRAFOIL FILLED WITH AISI 316.

KOB

**NOTE :-**

1. ALL DIMENSIONS ARE IN MM UNLESS OTHERWISE SPECIFIED.
2. INNER RING OF 316 STAINLESS STEEL SHALL BE PROVIDED.
3. PURCHASE SPECIFICATIONS SHALL BE AS PER APPLICABLE QULAITY PROCEDURE.

| REV | DATE | ALTD: | REV | DATE | ALTD: | REV | DATE | ALTERED |
|---|---|---|---|---|---|---|---|---|
| 03 | 2-1-97 | CHD&APPD | 02 | 30.12.93 | CHKD: | 01 | 8.10.92 | CHECKED S.K. |
| NOTES UPDATED REFER DCN.CS.0648 | | | FOR SL.NOS. 1 TO 7, DIMENSION 'C' 5,7,8,8,8,10&10 WERE 8,10,12,15,15,16&16 RESPECTIVELY. ACCORDINGLY DIMENSIONS A&B CHANGED. NOTE-3 ADDED. DCN No. CS:0241 | | | DIMENSIONS REVISED IN ALL CASES UPTO SL.NO.7. DIMENSION 3,2 WAS 3. MATL. GRAFOIL WAS ASBESTOS. REFER DCN NO: CY0059 DT: 6.10.92 | | |

# BHARAT HEAVY ELECTRICALS LTD.,
## BOILER PLANT UNIT, TIRUCHIRAPALLI-14

| FIRST ANGLE | SCALE | DRAWN | K.N.CHEZHIAN | TOTAL NET WT. (kg) | |
|---|---|---|---|---|---|
| | NTS | CHECKED | A.V.NATHAN | TYPE | I |
| | | APPROVED | N.S.N. MOHAN | | |
| ALL DIMENSIONS IN MILLIMETRES | | DATE | 16.3.92 | NEW/OLD DRG. NO | |

TITLE: SPIRAL WOUND GASKET

DRAWING NO: 3-V-0000-95038

REVISION: 07


CAUTION

THE INFORMATION CONTAINED IN THIS DRAWING IS THE PROPERTY OF BHARAT HEAVY ELECTRICALS LTD., BOILER PLANT UNIT, TIRUCHY-14 AND SHALL NOT BE USED WITHOUT THEIR EXPRESS WRITTEN PERMISSION IN ANY FORM OR PART THEREOF FOR ANY OTHER PURPOSE THAN FOR WHICH IT IS SENT TO YOU.


33-115

FIRST ANGLE PROJECTION (ALL DIMENSIONS ARE IN MILLIMETRES)

FOR TOLERANCES OF UNTOLERANCED DIMENSIONS DURING MANUFACTURE REFER RELEVANT QCD/QP

05-229/C

CAUTION: THE INFORMATION ON THIS DOCUMENT IS THE PROPERTY OF BHARAT HEAVY ELECTRICALS LIMITED. IT MUST NOT BE USED DIRECTLY OR INDIRECTLY IN ANY WAY DETRIMENTAL TO THE INTEREST OF THE COMPANY.

| SL.No. | DRG. No. | MATL. CODE | DIMENSIONS ϕD | ϕd | t | NET WT (Kg) | SIZE/RATING |
|---|---|---|---|---|---|---|---|
| 01 | 3-V-N097-95046/04 | 96 456 254 | 189 | 171 | ~~3.2~~ 4.5 | 0.10 | 4"-C300 GV |
| 02 | 3-V-N017-95046/04 | 96 456 255 | 242 | 222 | ~~3.2~~ 4.5 | 0.14 | 6"-C300 GV |
| 03 | 3-V-N089-95046/04 | 96 456 256 | 305 | 284 | ~~3.2~~ 4.5 | 0.16 | 8"-C300 GV |
| 04 | 3-V-N065-95046/04 | 96 456 257 | 372 | 345 | ~~3.2~~ 4.5 | 0.23 | 10"-C300 GV |
| 05 | 3-V-N081-95046/04 | 96 456 258 | 119 | 109 | ~~3.2~~ 4.5 | 0.05 | 2"-C300 GV |
| 06 | 3-V-N105-95046/03 | 96 456 304 | 439 | 411 | ~~3.2~~ 4.5 | 0.28 | 12"-C300 GV |
| 07. | 3-V-N049-95046/03 | 96 456 305 | 168.5 | 154 | ~~3.2~~ 4.5 | 0.065 | 3" 300 |
| 08 | 3-V-C363-95046/03 | 96456 361 | 700 | 660 | ~~4.4~~ 4.5 | 0.94 | 20"-C300 |
| 09 | 3-V-5186-95046/03 | 96456 362 | 188.5 | 168 | 3.2 | 0.094 | 3"-C300 NRV |
| 10 | 3-V-5187-95046/03 | 96456 363 | 200.0 | 180 | 3.2 | 0.098 | 4"-C300 NRV |
| 11 | 3-V-5188-95046/03 | 96456 364 | 252.2 | 232 | 3.2 | 0.125 | 6"-C300 NRV |
| 12 | 3-V-5189-95046/03 | 96456 365 | 295 | 275 | 3.2 | 0.146 | 8"-C300 NRV |
| 13 | 3-V-5153-95046/01 | 96 456 412 | 168.5 | 152 | | 0.065 | 2"-C300 FV |
| 14 | 3-V-5156-95046/01 | 96 456 413 | 202 | 188 | | 0.100 | 4"-C150 FV |
| 15 | 3-V-5154-95046/01 | 96 456 414 | 295 | 275 | 3.2 | 0.146 | 8"-C150 FV |
| 16 | 3-V-2478-95046/01 | 96 456 415 | 122 | 110 | | 0.035 | 3"-C300 SV |
| 17 | 3-V-1381-95046/01 | 96 456 416 | 316.5 | 296 | | 0.159 | 8"-C300 GV (OLD) |
| 18 | 3-V-1382-95046/01 | 96 456 417 | 376.5 | 352 | | 0.227 | 10"-C300 GV (OLD) |
| 19 | 3-V-0205-95046/01 | 96 456 418 | 109 | 97 | | 0.050 | 65/40 SV |
| 20 | 3-V-5123-95046/01 | 96 456 423 | 219 | 200 | | 0.12 | 150/16/III-FV |
| 21 | 3-V-0181-95046/01 | 96 456 424 | 349 | 337 | | 0.21 | 250/40/III-GV |
| 22 | 3-V-0546-95046/02 | 96 456 (435) 425 | 224 | 204 | | 0.027 | 150/40-FV |
| 23 | 3-V-0533-95046/01 | 96 456 426 | 345 | 320 | | 1.03 | 250/40-FV |

15

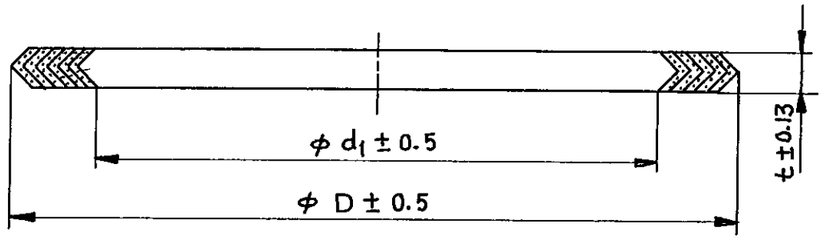


NOTES :-

1. THESE SPIRAL WOUND GASKETS SHALL WITHSTAND A SERVICE PRESSURE RANGE OF 365 TO 720 PSIG (25.66 TO 50.62 kp/cm²) AND A SERVICE OF -50°F TO 1025°F (-45°C TO 550°C)
2. PURCHASE SPECIFICATIONS SHALL BE AS PER LATEST APPLICABLE QUALITY PROCEDURE.

MATERIAL : SPIRAL WOUND GRAFOIL@ FILLED AISI TYPE 316@

| REV | DATE | ALTD: T.C. |
|---|---|---|
| 07 | 2-1-97 | CHD. & APPD |

NOTES UPDATED
REFER DCN.CS:0648

| REV | DATE | ALTERED: |
|---|---|---|
| 06 | 19/7/94 | CHECKED: |

01) IN SL.No. 22 MATL. CODE 96456435 WAS 96456425
02) DCN. No. CS:0355

| REV | DATE | ALTD: |
|---|---|---|
| 05 | 21.5.94 | CHD |

01. SL. No. 13 TO 23 INCLUDED.

| REV | DATE | ALTD: N. DHANPAL |
|---|---|---|
| 04 | 2.4.94 | CHKD: |

1. IN SL.NO. 1 TO 8 DIM. 't' CHANGED TO 4.5.
2. REFER DCN. SL.NO: CS:0298

| REV | DATE | ALTD: |
|---|---|---|
| 03 | 30.12.93 | CHKD: |

FOR SL. Nos. 1 TO 7 EXCEPT 4, DIMENSION 'ϕd' 171, 222, 284, 109, 411 AND 154 WERE 165, 218, 278, 103 405 AND 152 RESPECTIVELY. NOTE. 2 REVISED & NOT. 3 DELETED. DCN No. CS: 0241

| 02 | DATE | ALTD: |
|---|---|---|
| | 18.12.93 | CHKD: |

SL.NO. 8 TO 12 INCLUDED.

| REV. | DATE | ALTERED |
|---|---|---|
| 01 | 8.10.92 | CHECKED |

@MATL. GRAFOIL & 316 WERE ASBESTOS & 304 RESPECTIVELY.
SL.NOS. 06 & 07 ADDED.
REFER DCN NO: CV 0059 DT: 6.10.92

TYPE OF PRODUCT
OR NAME OF
CUSTOMER/PROJECT

**Bharat Heavy Electricals Ltd.,**
BOILER PLANT UNIT
TIRUCHIRAPALLI — 620 014

| | NAME | SIGN. | DATE | NO.OF VAR. |
|---|---|---|---|---|
| DRN. | K.N.CHEZHIAN | | 03-07-92 | |
| CHD. | A.V. NATHAN | | 7.7.92 | |
| APPD | N.S.N. MOHAN | | | |

| DEPT. | GRADE OF UNTOL DIM. | SCALE | WEIGHT (kg.) | REF. TO ASSY./OLD DRG. | ITEM NO. |
|---|---|---|---|---|---|
| VL | C/M/F | N.T.S | NTS | | |
| CODE 320 | | | | | |

TITLE
# SPIRAL WOUND GASKET
(CIRCULAR - GRAFOIL FILLED)

CARD CODE: U 01

DRAWING NO. 3-V-0000-95046

REV. 07

Size A3

ALL DIMENSIONS ARE IN MILLIMETRES. FOR TOLERANCES OF UNTOLERANCED DIMENSIONS DURING MANUFACTURE REFER RELEVANT QCP / QP.

DRAWING NO. 3-V-5192-23485

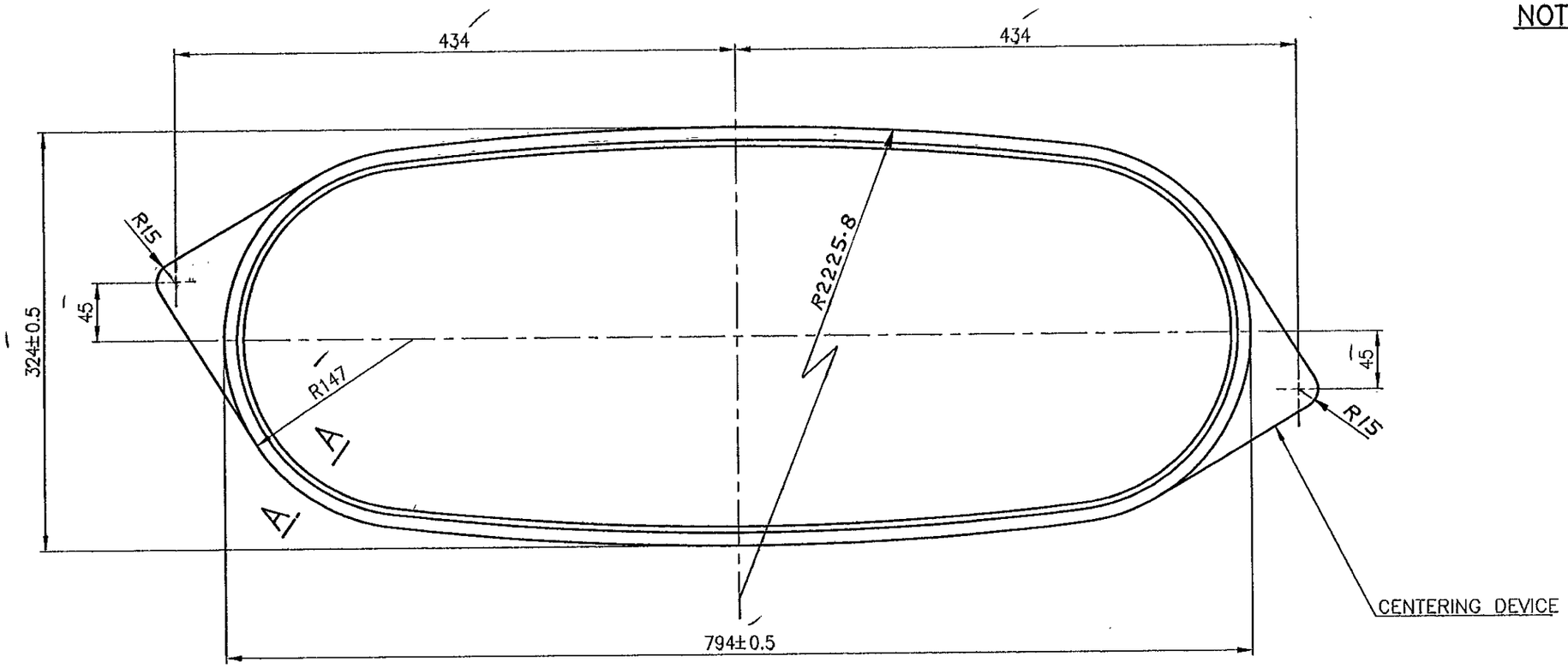


## NOTES

1. SPIRAL WOUND GASKET SHALL WITHSTAND A SERVICE PRESSURE 30Kg/cm$^2$ AND SERVICE TEMP. RANGE – 45°C TO 427°C
2. FOR PURCHASE SPECN. OF THIS GASKET REFER LATEST APPLICABLE QUALITY PROCEDURE
3. MATERIAL: SPIRAL WOUND GRAFOIL FILLED WITH AISI 316.
4. INNER RING OF 316 STAINLESS STEEL SHALL BE PROVIDED.

## SECTION AA

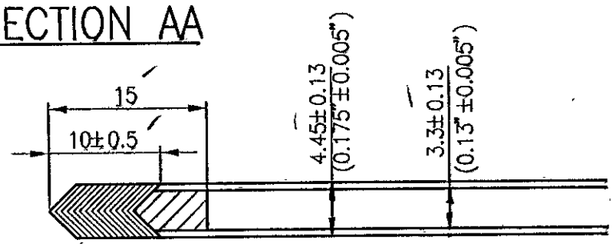


| NO OFF | DESCRIPTION | MATL CODE | MATL SPECN | HEAT TREATMENT | SCRAP SORT | NET WT (kg) | GROSS WT (kg) | DRAWING No | ITEM No |
|---|---|---|---|---|---|---|---|---|---|
| | – | 96453653 | | | | 0.46 | | | |

TYPE OF PRODUCT
OR NAME OF
CUSTOMER/PROJECT

BHARAT HEAVY ELECTRICALS LTD.,
UNIT: HIGH PRESSURE BOILER PLANT.
TIRUCHIRAPALLI-620014.
365-121

| | NAME | SIGN | DATE | NO.OF VAR. |
|---|---|---|---|---|
| DRN | V.BAIRAVAN | | 10/7/99 | |
| CHD | R.L.NARAYANAN | | 12/7/99 | |
| APPD | M.RAJAKUMAR | | 12/7/99 | |

| DEPT | SCALE | WEIGHT (KG). | REFERENCE INFORMATIONS | NO. OF ITEMS |
|---|---|---|---|---|
| VL | NTS | | | |
| CODE 320 | | | | |

TITLE: SPIRAL WOUND GASKET

CARD CODE: U 01

DRAWING NO. 3-V-5192-23485

REV 0

| REV | DATE | ALTERED |
|---|---|---|
| | | CHD & APPD |

CAUTION: The information on this document is the property of BHARAT HEAVY ELECTRICALS LTD. It must not be used directly or indirectly in any way detrimental to the interest of the company.

Size A3

ALL DIMENSIONS ARE IN MILLIMETRES. FOR TOLERANCES OF UNTOLERANCED DIMENSIONS DURING MANUFACTURE REFER RELEVANT QCP / QP.

DRAWING NO. 3-V-NC06-23981

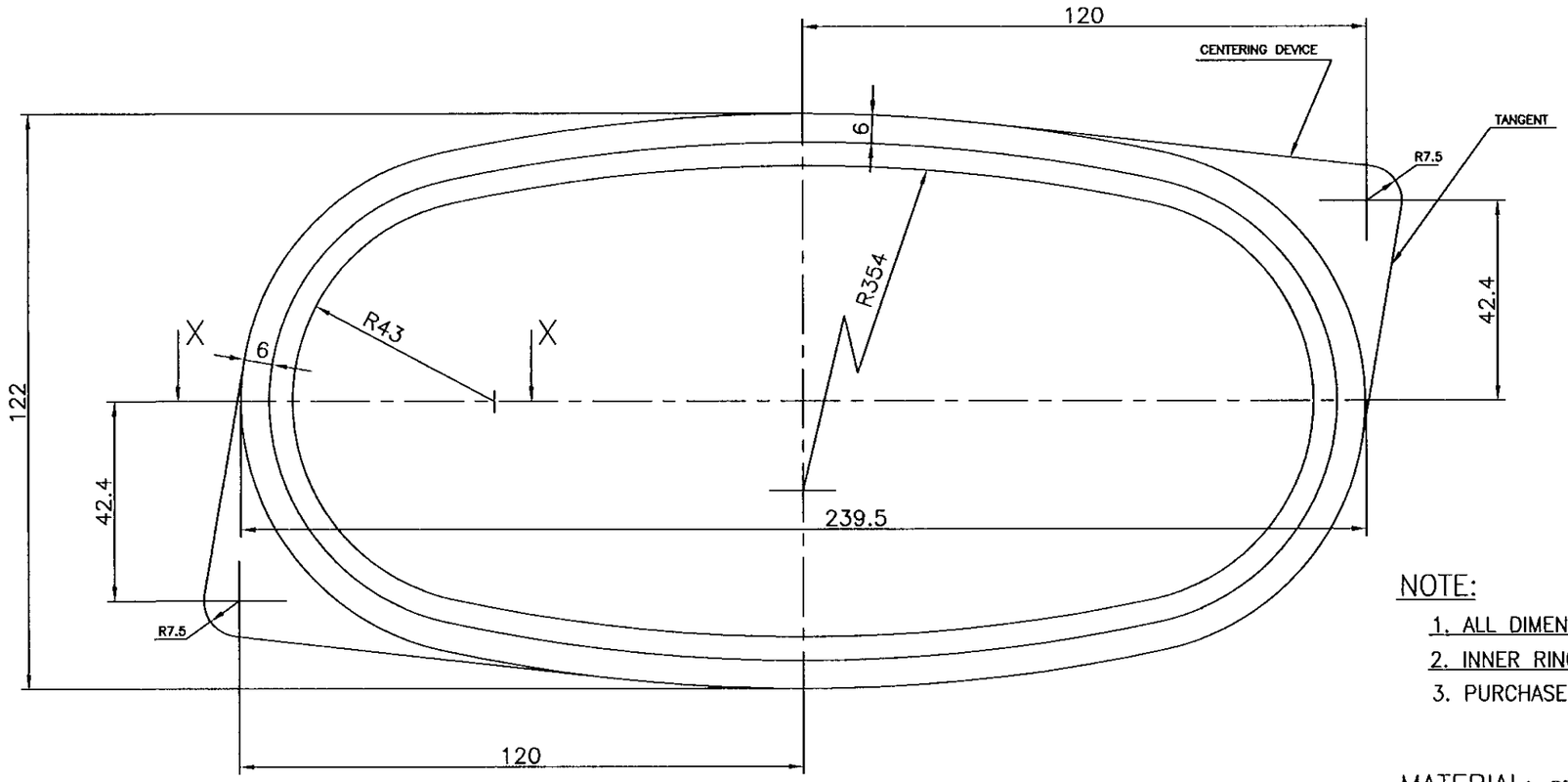


NOTE:

1. ALL DIMENSIONS ARE IN MM UNLESS OTHERWISE SPECIFIED.
2. INNER RING OF 316 STAINLESS STEEL SHALL BE PROVIDED.
3. PURCHASE SPECIFICATIONS SHALL BE AS PER APPLICABLE QUALITY PROCEDURE.

MATERIAL: SPIRAL WOUND AISI 316 FILLED WITH GRAFOIL.

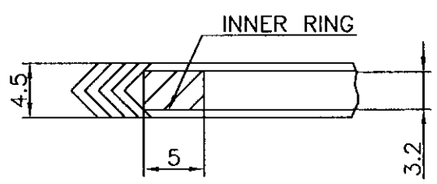


SECTION – XX

DIMENSIONAL TOLERANCES FOR GASKET

INSIDE DIMENSIONS ± 0.5
OUTSIDE DIMENSIONS ± 0.5
THICKNESS ± 0.13

WORKING CONDITIONS

PRESSURE – 30 KG/Sq.Cm. (524 PSI)
TEMPERATURE – 45°C TO 550°C
(–50°F TO 1025°F)

| NO OFF | DESCRIPTION | MATL CODE | MATL SPECN | HEAT TREATMENT | SCRAP SORT | NET WT (kg) | GROSS WT (kg) | DRAWING No | ITEM No |
|---|---|---|---|---|---|---|---|---|---|
| – | – | – | – | – | – | – | – | – | – |

| REV | DATE | ALTERED |
|---|---|---|
| 02 | 05.08.04 | M.SRINIVASAN |
| | | CHD & APPD K.S.RAMAN |

DCP:800351 DIMENSIONS 42.4 & 120.0 WERE 40.8 & 116.8 RESPECTIVELY.

CAUTION: The information on this document is the property of BHARAT HEAVY ELECTRICALS LTD. It must not be used directly or indirectly in any way detrimental to the interest of the company.

TYPE OF PRODUCT
OR NAME OF
CUSTOMER/PROJECT

BHARAT HEAVY ELECTRICALS LTD.,
UNIT: HIGH PRESSURE BOILER PLANT.
TIRUCHIRAPALLI-620014.
365-121

| | NAME | SIGN | DATE | NO.OF VAR. |
|---|---|---|---|---|
| DRN | M.SRINIVASAN | | 29.04.02 | |
| CHD | P.BOOMINATHAN | | 29.04.02 | |
| APPD | K.S.RAMAN | | 29.04.02 | |

| DEPT | SCALE | WEIGHT (KG). | REFERENCE INFORMATIONS | NO. OF ITEMS |
|---|---|---|---|---|
| VL | N T S | 0.20 | COMPONENT CODE :964651430000 | |
| CODE 320 | | | CAD REF: C323981 | |

| TITLE | CARD CODE | DRAWING NO. | REV |
|---|---|---|---|
| SPIRAL WOUND GASKET | U 01 | 3-V-NC06-23981 | 01 |

Size A3

ALL DIMENSIONS ARE IN MILLIMETRES. FOR TOLERANCES OF UNTOLERANCED DIMENSIONS DURING MANUFACTURE REFER RELEVANT QCP / QP.

DRAWING NO. 3-V-NC12-23999

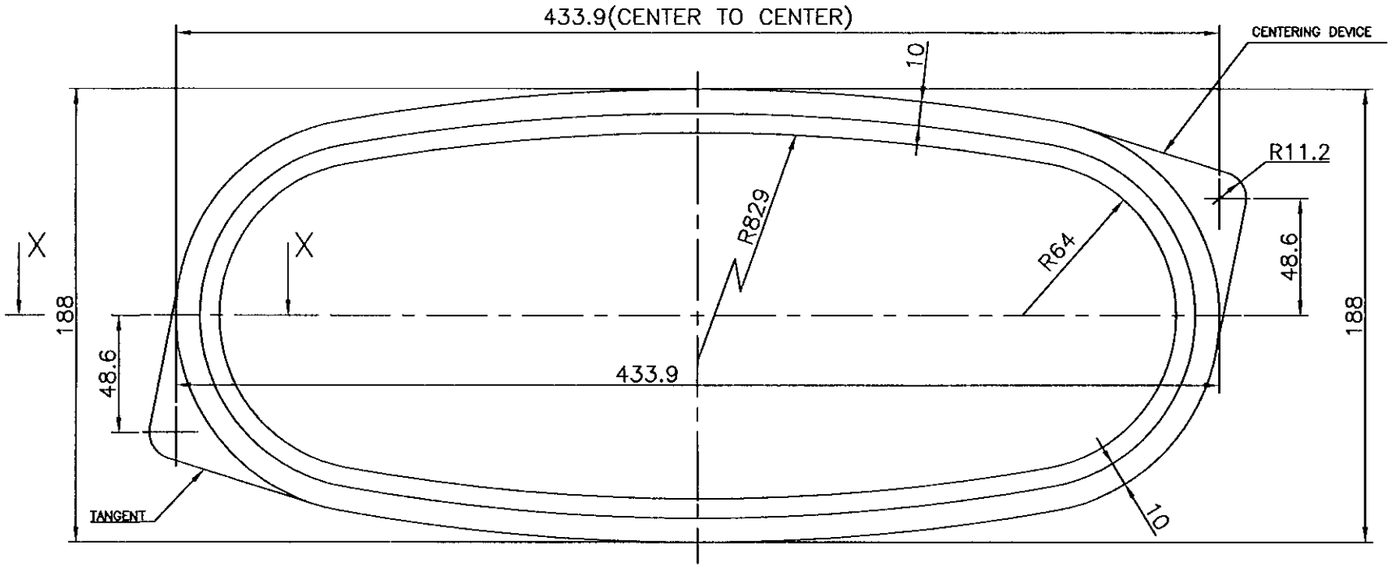


## DIMENSIONAL TOLERANCES FOR GASKET

| | |
|---|---|
| INSIDE DIMENSIONS | ± 0.5 |
| OUTSIDE DIMENSIONS | ± 0.5 |
| THICKNESS | ± 0.13 |

## WORKING CONDITIONS

PRESSURE – 30 KG/Sq.Cm. (524 PSI)

TEMPERATURE – 45°C TO 550°C
(–50°F TO 1025°F)

## NOTE:

1. ALL DIMENSIONS ARE IN MM UNLESS OTHERWISE SPECIFIED.
2. INNER RING OF 316 STAINLESS STEEL SHALL BE PROVIDED.
3. PURCHASE SPECIFICATIONS SHALL BE AS PER APPLICABLE QUALITY PROCEDURE.

MATERIAL: SPIRAL WOUND AISI 316 FILLED WITH GRAFOIL.

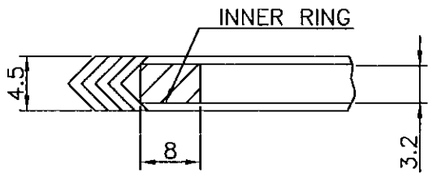


SECTION – XX

| NO OFF | DESCRIPTION | MATL CODE | MATL SPECN | HEAT TREATMENT | SCRAP SORT | NET WT (kg) | GROSS WT (kg) | DRAWING No | ITEM No |
|---|---|---|---|---|---|---|---|---|---|
| – | – | – | – | – | – | – | – | – | – |

TYPE OF PRODUCT
OR NAME OF
CUSTOMER/PROJECT

BHARAT HEAVY ELECTRICALS LTD.,
UNIT: HIGH PRESSURE BOILER PLANT.
TIRUCHIRAPALLI-620014.
365-121

| | NAME | SIGN | DATE | NO.OF VAR. |
|---|---|---|---|---|
| DRN | M.SRINIVASAN | | 29.04.02 | |
| CHD | P.BOOMINATHAN | | 29.04.02 | |
| APPD | K.S.RAMAN | | 29.04.02 | |

| REV | DATE | ALTERED |
|---|---|---|
| | | CHD & APPD |

CAUTION: The information on this document is the property of BHARAT HEAVY ELECTRICALS LTD. It must not be used directly or indirectly in any way detrimental to the interest of the company.

| DEPT | SCALE | WEIGHT (KG). | REFERENCE INFORMATIONS | NO. OF ITEMS |
|---|---|---|---|---|
| VL | N T S | 0.32 | COMPONENT CODE :964651450000 | |
| CODE 320 | | | CAD REF: C323999 | |

| TITLE | CARD CODE | DRAWING NO. | REV |
|---|---|---|---|
| SPIRAL WOUND GASKET | U 01 | 3-V-NC12-23999 | |

Size A3

ALL DIMENSIONS ARE IN MILLIMETRES.

FOR TOLERANCES OF UNTOLERANCED DIMENSIONS DURING MANUFACTURE REFER RELEVANT QCP/QP

| REV | DATE | ALTERED | J.S |
|---|---|---|---|
| 01 | 19.01.11 | CHD & APPD | K.S |

VARIANT Nos: 1 & 2 INTRODUCED AND CONVERTED AS CAD.

DCN NO. : 801133/5012916

CAUTION: The information on this document is the property of BHARAT HEAVY ELECTRICALS LTD. It must not be used directly or indirectly in any way detrimental to the interest of the company.

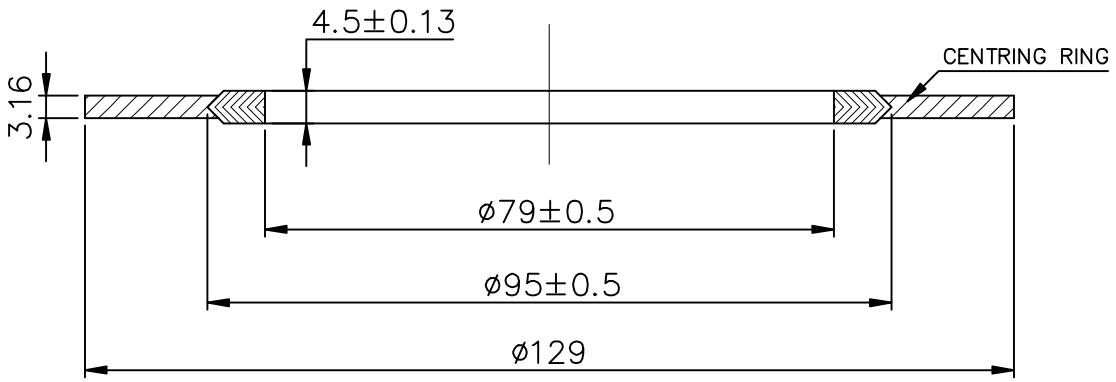


NOTE:

1. COMPRESSED GRAFOIL WITH ZINC DUST CORROSION INHIBITOR TO BE COMPRESSED TO A DENSITY OF 1.6 gms/cc
2. SPIRAL WINDING MATERIAL TYPE 304 STAINLESS STEEL WITH GRAFOIL FILLER FOR VARIANT NO : 1
3. SPIRAL WINDING MATERIAL TYPE 316 STAINLESS STEEL WITH GRAFOIL FILLER FOR VARIANT NO : 2
4. GASKET SHALL WITH STAND SERVICE PRESSURE UP TO 54 KG/CM² AND SERVICE TEMP 500°C
5. FOR QUALITY REQUIREMENTS REFER LATEST APPLICABLE QUALITY PROCEDURE

| VARIANT No. | PART CODE |
|---|---|
| 01 | 963534250000 |
| 02 | 963534250100 |

| NO OFF | DESCRIPTION | MATL CODE | MATL SPECN | HEAT TREATMENT | SCRAP SORT | NET WT (kg) | GROSS WT (kg) | DRAWING No | ITEM No |
|---|---|---|---|---|---|---|---|---|---|
| | | | | | | | | | |

BHARAT HEAVY ELECTRICALS LTD.,
UNIT: HIGH PRESSURE BOILER PLANT.
TIRUCHIRAPALLI 620014.
365-127

| | NAME | SIGN | DATE | NO.OF VAR |
|---|---|---|---|---|
| DRN | J.SANKAR | J.S | 19.01.11 | |
| CHD | K.SRIDHARAN | K.S | 19.01.11 | |
| APPD | K.SRIDHARAN | K.S | 19.01.11 | |

| DEPT | SCALE | WEIGHT (KG). | REFERENCE INFORMATIONS | NO. OF ITEMS |
|---|---|---|---|---|
| SB | NTS | 0.100 | | |
| CODE 330 | | | | |

| TITLE | CARD CODE | DRAWING NO. | REV |
|---|---|---|---|
| SPRIAL WOUND GASKET | U 01 | 4-20-001-02256 | 01 |

Size A4

ALL DIMENSIONS ARE IN MILLIMETRES.

FOR TOLERANCES OF UNTOLERANCED DIMENSIONS DURING MANUFACTURE REFER RELEVANT QCP/QP

| REV | DATE | ALTERED | J.S |
|---|---|---|---|
| 04 | 20.03.14 | CHD & APPD | S.K.G & H.R |

SUB DELIVERY CODE INTRODUCED.

DCN:SB:801716/5017955

CAUTION: The information on this document is the property of BHARAT HEAVY ELECTRICALS LTD. It must not be used directly or indirectly in any way detrimental to the interest of the company.

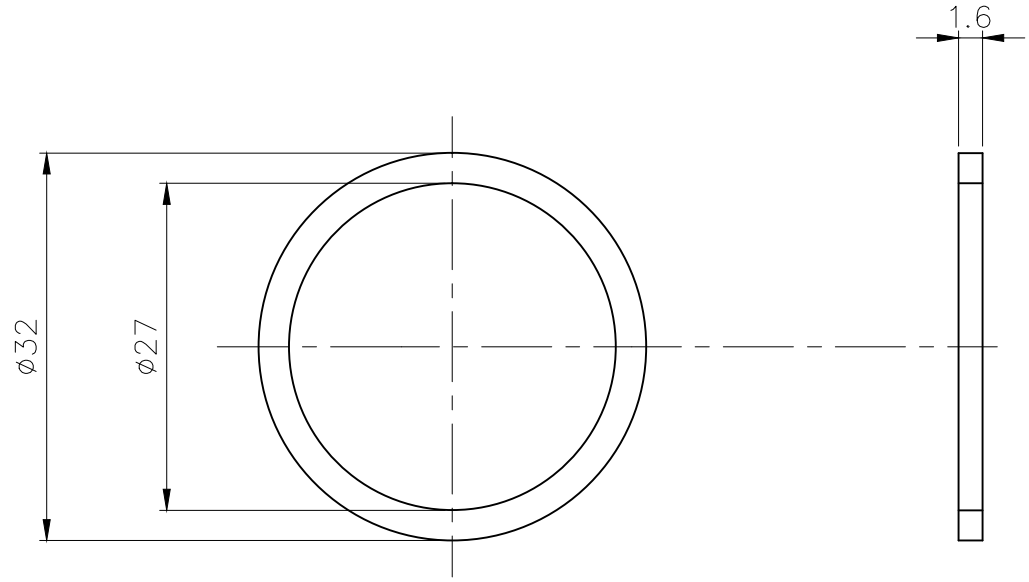


NOTES: –

1. FOR QUALITY REQUIREMENTS REFER APPLICABLE LATEST QUALITY PROCEDURE.

PART CODE : 963536480000

| NO OFF | DESCRIPTION | MATL CODE | MATL SPECN | HEAT TREATMENT | SCRAP SORT | NET WT (kg) | GROSS WT (kg) | DRAWING No | ITEM No |
|---|---|---|---|---|---|---|---|---|---|
| 01 | ø32/T 1.6 | – | GRAFOIL | – | – | 0.010 | – | – | – |

BHARAT HEAVY ELECTRICALS LTD.,
UNIT: HIGH PRESSURE BOILER PLANT.
TIRUCHIRAPALLI 620014.
365–122

| | NAME | SIGN | DATE |
|---|---|---|---|
| DRN | V.ARUMUGAM | V.A | 11.06.01 |
| CHD | K.SRIDHARAN | K.S | 11.06.01 |
| APPD | S.NATARAJAN | S.N | 11.06.01 |

NO.OF VAR

| DEPT | SCALE | WEIGHT (KG). | REFERENCE INFORMATIONS | NO. OF ITEMS |
|---|---|---|---|---|
| SB | NTS | 0.01 | – | |

CODE 330

| TITLE | CARD CODE | DRAWING NO. | REV |
|---|---|---|---|
| GASKET | U 01 | 4–20–201–00356 | 04 |

Size A4

BHARAT HEAVY ELECTRICALS LIMITED
TIRUCHIRAPALLI 620 014 INDIA

| | | |
|---|---|---|
| TECHNICAL DELIVERY CONDITION FOR | MILD STEEL GASKETS FOR VALVES | TDC:5:158<br>PAGE 01 OF 03 |

EFFECTIVE DATE 08-01-89

| ACCEPTED BY | SIGNATURE | DATE |
|---|---|---|
| ENGINEERING | | 27/01/89 |
| PURCHASE | | 28/1/89 |
| QUALITY ASSURANCE | | 04/02/89 |
| QUALITY CONTROL | | 27/1 |

| REV. NO. | DATE | AUTHORISED BY | SIGNATURE |
|---|---|---|---|
| 00 | 08/01/89 | QUALITY ASSURANCE | |
| | | QUALITY ASSURANCE | |

ISSUED BY : QUALITY ASSURANCE

SCOPE

This Technical Delivery Condition specifies the requirements for the supply of Mild Steel Gaskets for valves.

The dimensions, dimensional tolerances and quantity shall be as per drg. and purchase orders.

MATERIALS

The material shall be of plain low Carbon Steel (Equivalent to AISI 1010 or even less).

The material shall be in fully soft annealed condition with max. hardness of 90 BHN.

The above annealing operation must be carried out before the gasket is machined to the final shape and size.

MECHANICAL PROPERTIES

Hardness must be measured on the finished Gaskets and the same should not exceed 90 BHN.

WORKMANSHIP

The finish machined gaskets to the drg. dimensions must be free from rust, heat treatment scales, burrs and other defects.

MARKING AND PACKING

The finished gasket must be applied with a layer of plastic peel rust preventive to avoid rusting during storing. Before applying the plastic peel, the gasket must be identified by paint stencilling in the location given as overleaf

The gaskets must be packed in suitable wooden boxes to avoid transit damage.

CERTIFICATION

Each batch of the gaskets must be supplied with back up certificate for the following:

a) P.O. Number
b) T.C. Number and date
c) Material quantity in each size
d) Material chemistry
e) Heat treatment condition
f) Hardness

END USE

The gaskets are used in valves to arrest leakage of fluid through the bonnet area in the case of high pressure valves.

⊗ MARKING TO BE DONE ON THIS FACE

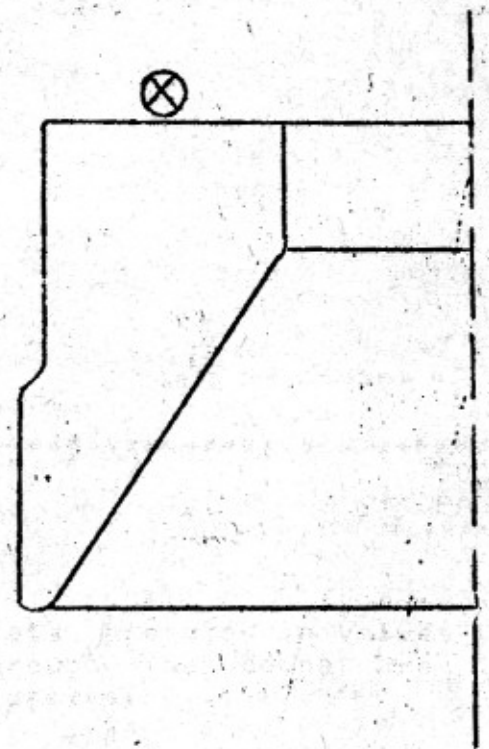

N,



TDC FOR SUB-DELIVERY COMPONENTS (SWG)

| | | | |
|---|---|---|---|
| 1. | Item | : | Spiral wound gaskets with grafoil filler. |
| 2. | Application | : | Body-Bonnet Sealing |
| 3. | Material | :) | ) Refer Annexure |
| 4. | Inspection | :) | |
| 5. | Packing | : | Refer Annexure |

(Viswanathan)
PREPARED

CHECKED
(S. Chandra Shekar)

APPROVED
S. Kumar
30.1.2.93

N2



ANNEXURE

---

TECHNICAL DELIVERY CONDITION FOR METALLIC SPIRAL WOUND GASKETS - GRAFOIL FILLER

---

1.0 SCOPE:

This technical delivery condition specifies the constructional, functional and qualitative requirements of metallic spiral wound gaskets with grafoil filler for use in valves at different pressure and temperatures.

2.0 MANUFACTURE AND WORKMANSHIP :

2.1 These spiral wound gaskets shall be made of alternate plies of performed metal winding and filler tightly wound spirally.

2.2 The filler shall protrude above the metal strip by a maximum extent of 0.125mm on either face of the gasket.

2.3 At the start and conclusion of the spiral form a number of metal plies can be provided without any filler material; however, the number of such plies s shall not exceed 5 at each end.

2.4 The metal winding around the entire inside circumference of the gasket shall be suitably spot welded in equal spacing not exceeding 25mm with a minimum of 3 welds.

2.5 The metal winding on the outside shall be welded with a minimum of three welds out of which one weld shall be at the terminal point.

2.6 Gaskets are to be compression tested in a compression testing machine with a suitable load to produce a unit pressure of 10000 to 15000 psi on the gasket. The compression shall not exceed the values specified in Table-1

... 3

TABLE-1

| Gasket thickness before compression | Gasket thickness after compression |
|---|---|
| 3.2 mm (1.125") | 2.29 to 2.54 mm (0.09" to 0.1") |
| 4.4 mm (1.175") | 3.18 to 3.43 mm (0.125" to 0.135") |

2.7 GASKET DENSITY :

The ratio of the number of metal windings to the number of filler windings, winding tension etc. which govern the gasket density shall be suitably selected by the supplier such that when the gaskets are compressed as described in Para 2.6, the thickness of the gasket lie within the limits specified in Table-1.

3.0 DIMENSION :

3.1 All dimensions and style shall be in accordance with the relevant drawing. Where tolerances are not specified in the drawing, the following deviations can be allowed:

Gasket diameter ID ± 0.4 mm OD + 0.5 mm − 0.0

Gasket thickness ± 0.13 mm

3.2 The thickness of the metal strip shall be between 0.18 mm and 0.23 mm.

3.3 The thickness of the grafoil used as filler shall not exceed 0.6 mm.

4.0 MATERIAL

4.1 Unless otherwise specified the material used for the metal winding shall be AISI 304 stainless steel.

4.2 The filler material shall be grafoil tapes.

... 4

4.3 If gaskets are required with centering rings the material shall conform to the drawing requirement.

5.0 PACKING :

Spiral wound gaskets shall be packed in Nos. of 10 in suitable card-board containers to avoid damage during transit. It should carry proper identification giving the size, type, drawing number and supplier's name.

6.0 RECEIPT INSPECTION & TESTING :

6.1 Visual Inspection :

The gasket shall be undamaged and the windings shall be intact.

6.2 At random few samples shall be selected and subjected to dimensional inspection. Dimensions shall conform to those given in the drawing.

6.3.1 The metal strip used shall be analysed for its chemical composition and it shall conform to the specification.

6.3.2 The filler material shall be analysed for material conformance.

6.4 Compression test :

6.4.1 The test shall consist of subjecting the gaskets to predetermined loads in a compression testing machine and measuring the thickness of the gaskets under the applied loads and after removal of loads.

6.4.2 The gasket shall be subjected to a uniform unit compressive load as described in Para 2.6

6.4.3 The thickness of the gasket shall be measured using dial indicators; with the applied load on the gasket, the thickness shall be within the limits specified in Table-1 under 2.6

6.4.4 After the load is removed the gasket shall recover atleast 0.25 mm over the compressed thickness obtained in the compression test.

.... 5

N5



6.4.6 The gasket shall be visually examined after the compression test.

No buckling on the inner edge of the gasket shall be allowed. The spot welds should not foil and the windings should be intact.

6.5 Hydrostatic test and steam test :

6.5.1 The gasket shall be assembled in the actual valve or an equivalent flange.

6.5.2 The bolts shall be tightened with a torque wrench and the torques applied or compressed height shall not exceed those indicated in the drawing.

6.5.3 Normal sequencing of bolt tightening for flanges shall be followed.

6.5.4 Hydrostatic test and steam test shall be carried out at the parameters mentioned in the drawing. There shall be no leakage through the gasketed joint.

7.0 Test certificates :

Supplier shall give the following Test Certificates for each item for each lot and should contain all details of the following tests.

a. Compression Test Certificate

b. Material Test Certificate

c. Visual inspection and dimensional inspection.

COPYRIGHT AND CONFIDENTIAL

The information on this document is the property of BHARAT HEAVY ELECTRICALS LIMITED. It must not be used directly or indirectly in any way detrimental to the interest of the company.

**NON ASBESTOS COMPRESSED FIBRE JOINTING SHEETS**
(HIGH PRESSURE STEAM & WATER)

## 1. SCOPE

This specification governs the quality of non-asbestos compressed fibre jointing sheets for high pressure steam and water.

## 2. APPLICATION:

The supplied material shall be suitable for use in steam turbines, boilers, thermal insulation, packing & sealing purposes at maximum operating pressures of 14.0 N/mm$^2$and temperature of 450 C.

## 3. DIMENSIONS AND TOLERANCES:

3.1. Dimensions: the material should be supplied to the dimensions specified on the order.

3.2. Thickness: the thickness of the sheets shall preferably be selected from the following,

0.40,0.50,0.75,1.00,1.50,2.00,3.00, 5.00 mm

3.3. Tolerance: Maximum permissible deviation on the nominal thickness of the sheets shall be as

| Nominal thickness ( mm) | | Permissible deviation from nominal thickness ± mm | Max. Deviation between points not more than 250 mm apart, ± mm |
|---|---|---|---|
| Above | Up to& including | | |
| - | 0.50 | 0.05 | 0.05 |
| 0.50 | 1.00 | 0.10 | 0.10 |
| 1.00 | 2.00 | 0.15 | 0.10 |
| 2.00 | 3.00 | 0.20 | 0.15 |
| 3.00 | 5.00 | 0.20 | 0.15 |

## 4. MATERIAL

The material used for manufacturing this Non Asbestos Compressed Fibre Jointing Sheets is glass, ceramic or aramid fibre with suitable high temperature binder material.

**5. FREEDOM FROM DEFECTS**

- The sheets shall have uniform texture, smooth on both sides and free from irregularities such as blisters tears and lumps.
- The sheets shall have square and evenly cut edges and they shall be smooth flat, free from cracks, as well as foreign mechanical inclusions.
- The Non-Asbestos Compressed Fibre jointing sheets shall be of uniform thickness and suitable for easy shearing. The variations in thickness in one sheet should not exceed 10%.

6. **TEST SAMPLE**
Supplier shall supply a test sample to BHEL for acceptance before regular supplies.

**7. PROPERTIES:**
For Properties and Conditions refer TABLE-1 attached herewith.

| Thickness(mm) | Material Code | **Weight/unit area(kg/m$^2$ ) |
|---|---|---|
| 0.4 | 220300280000 | - |
| 0.5 | 220300290000 | - |
| 0.75 | 220300440000 | - |
| 1 | 220300310000 | - |
| 1.5 | 220300700000 | 2.85 |
| 2 | 220300300000 | 3.8 |
| 3 | 220300150000 | 5.7 |
| 5 | 220300020000 | 5.75 |

***weight indicated is approximate only. Vendor to provide actual weight per square meter.*

**8. TYPE APPROVAL**
Samples for the type approval shall be accepted only from those manufacturers whose manufacturing and testing facilities are considered satisfactory, to ensure continuous supply of good products.

**9. TEST CERTIFICATES.**

Unless otherwise stated, three copies of the test certificate shall be supplied along with each consignment, giving the following information.

**TP 23292-**Rev No 02: Non-Asbestos Compressed Fibre Jointing Sheets for high pressure steam and water applications

BHEL Order No.
Manufacturer's /Supplier's Name
Trade mark , if any
Batch/ Lot No.
Date of manufacture
Quantity supplied
Test results of clause 3 and TABLE -1

**10. PACKING AND MARKING**

Unless otherwise stated, the material shall be supplied either flat or in rolls suitably packed to prevent damages during transit.
Manufacturer's name and grade shall be clearly marked on a piece of 300 x 300 mm cut from any position of the sheet.
Each package shall be legibly marked with following information,

**TP 23292-**Rev No 02: Non Asbestos Compressed Fibre Jointing Sheets for high pressure steam and water applications

BHEL Order No.
Manufacturer's /Supplier's Name
Trade mark , if any
Batch/ Lot No.
Date of manufacture
Quantity supplied

**TABLE – 1**

| Sl No | Characteristic | Requirement | Method of Test |
|---|---|---|---|
| 1 | Material (preferable. Better material meeting physical properties may be used. But must be certified in TC) | Glass, ceramic or aramid fibre with suitable high temperature binder. | The supplier shall certify the product as asbestos free by doing the test methods like FT-IR, XRD, Microscopic or any other standard test methods.* |
| 2 | Density gm/CC | 1.57 to 2.20 | ASTM C1185# |
| 3 | Tensile Strength<br>a) 0.4 to 1.0 mm thick<br>b) Above 1 mm thick | 14 N/mm2 minimum | ASTM F 152# |
| 4 | Compressibility % | 6-14 | ASTM F36# |
| 5 | % Recovery | 40 minimum | ASTM F36# |
| 6 | Water Absorption - % increase in mass. Duration – 24 hrs | 10 max. | ASTM C1185# |
| 7 | Loss of ignition at 500 °C ± 5 °C. Duration – 1 hr | 30 % max | ASTM F495# |
| 8 | Flexibility Test (after accelerated ageing) | No sign of cracking | ASTM C1185/ASTM F147 # |
| 9 | Stress relaxation – residual Stress | 23 $N/mm^2$ minimum | ASTM 6147/BS 7531 # |
| 10 | Moisture content 105 °C ± 5°C | 2 max | ASTM C1185 # |

- * - Test Report shall be submitted by the vendor along with materials as a compliance certificate to confirm the material supplied is asbestos free.
- # - Standard Methods along with applicable test and acceptance standard applied at test centres shall be declared in TC. Other international standard testing methods are also valid.
- The compressibility, tensile strength of the fibre shall not be sacrificed due to use of non-asbestos material. Vendor may guarantee the above and these properties shall be certified by Vendor on Test Certificate.

**Documents submitted with the offer shall be signed and stamped in each page by authorized representative of the bidder.**

## G1. INSTRUCTION TO BIDDER

Quotations shall be submitted before due date and time. Late offers are liable to be rejected, so please ensure to submit bid well within due date and time. Techno-commercial part will be opened on due date.

**Based on evaluation of techno-commercial offers, Price bids of bidders who qualify from techno-commercial evaluation shall be opened. BHEL may decide to open the Price bid same day at 1700 hrs. If not opened on the same day, all qualifying bidders shall be notified for date of opening of Price bids by email/fax/post/courier/E-procurement system generated email.**

## G1.1 INSTRUCTION TO BIDDER (In case of Non-E-Procurement / Paper/ Manual/ Hard Copy based tenders)

Sealed Tenders can be dropped in the tender box labeled as 'Tender box for MM contracts'. This tender box is located at the entrance of Admin block BHEL Goindwal. Fax (01859-222061) / E-Mail (**tendermm_ivp@bhel.in**) offers received in time shall be considered only when such offers are complete in all respects. In case of bulky tender please handover quotation to Sh Rakesh Kumar/ SDGM/Head-MM or Sh Gurcharan Singh / AGM-Operations & MM. [Contact: 01859 224 615/631]. Bid can be send to following address:

**BHEL, Industrial Valve Plant,**
**#433, Industrial Complex,**
**Goindwal Sahib, Distt. Tarn Taran,**
**Punjab-143422.**

## G1.2 INSTRUCTION TO BIDDER (In case of E-Procurement)

Interested bidders/Suppliers shall submit their offer through e-Procurement mode at https://bhel.abcprocure.com. **Offers in any other mode will not be accepted.**

For Enterprise Procurement System (EPS) Bidders/Suppliers are requested to follow these steps:

**a. Requirements**

1. Computer with good Internet Connection.
2. Operating System should be Windows Vista / Windows 7 and above.
3. Web Browsers: Internet Explorer 9.0 (32-bit Browser only) & above

**b. Mandatory Requirements:**

Suppliers interested for registration for BHEL Open Tenders should have a valid DSC (Digital Signature Certificate) before Proceeding forward for Registration. Herein a Valid DSC refers to a Class-II/III Digital Signature Certificate (DSC) for Signing & Encryption (Required both digital signature certificate: Signing & Encryption) of bids issued by any of the valid Certifying Authorities (approved by Controller of Certifying Authorities) in India. Valid Digital Signature Certificate (DSC) must be installed in a computer system from where you want to access the website.

**For Unregistered Suppliers in EPS:**

Procedure for Online Registration in EPS for Open Tender Suppliers for BHEL. Please follow the below steps for registration: -

1. Click Register Button (Top of the Screen).

2. Please input your organization PAN No (in case of Indian supplier) or select your "country" in case you are an overseas Supplier.
3. Select Units to participate in.
4. Fill up Company details.
4. Key in your desired login id If you have registered by keying in PAN No. then your desired login id will be prefixed by "OTI", In case of **overseas suppliers it will be also prefixed with "OTI"**.
5. Fill in the Captcha code & agree to the terms & conditions and privacy policy of this website and click SUBMIT.

Once the above steps are completed, contact to M/s eProcurement Technologies Limited for ID Activation. M/s e Procurement Technologies limited, Ahmedabad will activate your ID within 2 business hours. After registering, follow the steps provided in "For Registered Supplier" to view RFQ.

NB: - 1 BHEL Administrator or user will have no role for approving Registration and Open Tenders and DSC for any supplier who has registered himself from the front END which is in case of OT.

**For Registered Supplier in EPS:**

1. Supplier visits EPS home page
2. Supplier Login in with their user id and password
3. Search the RFQ ID and views it.
4. Attaches themselves to the RFQ by clicking the "I/We wish to participate".
5. Supplier fills the bid template and makes necessary attachments
6. Supplier submits their bid by clicking Sign, Encryption & Save button.

In any problem is faced by supplier while login/registration in EPS (**https://bhel.abcprocure.com**) and any other assistance, please contact the support team of M/s e Procurement Technologies limited, Ahmedabad as per details mentioned in table below: -

| Name | Contact Nos. | e-mail ID | Role | Location |
|---|---|---|---|---|
| Mukunthan | +91 6353215001 | Trichy.bhel@eptl.in | Support Executive | Trichy |
| Swapnil Hamilton | +91 7940270549 | swapnil.h@eptl.in | Support Executive | HO – Ahmedabad |
| Hardik Oza | +91 7940270560 | Hardik.oza@eptl.in | Support Executive | HO – Ahmedabad |
| Ankur Bhatt | +91 7940270590 | ankur.bhatt@eptl.in | Support Executive | HO – Ahmedabad |
| Prashant Rajyaguru | +91 7940270545 | prashant@eptl.in | Asst. Manager – Implementation & Support | HO – Ahmedabad |
| Dharam Rathod | +91 7940270596 | dharam@eptl.in | Manager – Implementation & Support | HO – Ahmedabad |
| Pradip Parmar | +91 7940270532 | pradip@eptl.in | Sr Mgr – Implementation & Support | HO – Ahmedabad |
| Devang Patel | +91 7940270576 | devang@eptl.in | Sr Manager – Implementation & Support | HO – Ahmedabad |

## G2 OTHER IMPORTANT INFORMATION RELATED TO E-PROCUREMENT TENDERS

1. The bidder has to keep track of any changes by viewing the addendum / Corrigendum's issued by the Purchaser on time-to- time basis in the E-Procurement platform. The Company calling for tenders shall not be responsible for any claims/problems arising out of this.
2. The user should complete all the processes and steps required for bid submission. The successful bid submission can be ascertained once acknowledgement is given by the system through bid submission number after completing all the processes and steps. BHEL and M/s e Procurement Technologies limited will not be responsible for incomplete bid submission by users. Users may also note that the incomplete bids will not be saved by the system and are not available for the Purchaser for processing.
3. Before uploading scanned documents if any, the bidders shall sign on all the statements, documents, certificates uploaded by him, owning responsibility for their correctness / authenticity.
4. On the due date of tender opening, only technical bids will be opened. The opened technical bids will be evaluated by us and clarifications required, if any, will be called for from the bidders on technical and commercial points. If no reply is received from the vendor for the clarification raised by BHEL with in the final cut-off date, those vendors offer will be processed with the documents available / submitted against this tender. Offers not meeting the required specification and technical condition will be summarily rejected. The price bids of technically suitable bidders will be opened on a later date with prior intimation to techno-commercially suitable bidders.
5. Ranking L-1, L-2 etc. shall be done for individual item for the techno-commercially acceptable offers on landed cost to BHEL, IVP Goindwal basis and BHEL reserves the right to place order for individual items with different vendors. In the event of more than one vendor becoming L1 for the item, the enquiry quantity will be shared equally among all the L1 vendors.
6. BHEL reserves the right to negotiate with L1 vendor or re-float the tender for items where, **L1** price is not the lowest acceptable price; BHEL reserves the right to increase or decrease the tender quantity.
7. **If supplier is mentioning delivery destination within state/ outside state depending upon his location of factory, Free On Road etc these are assumed as on FOR Goindwal. If supplier is wishing to give delivery on Ex works basis, then he has to clearly mention about it.**

## G3 PRICE BASIS

a. Order of enquiry item sl. No. shall be maintained in the quotation.
b. The rates quoted shall be firm and fixed. No price variation is proposed and allowed.
c. Rates quoted should be F.O.R Goindwal basis. If bidder has quoted Ex Works, loading shall be done as per BHEL discretion for tender evaluation.

**Variation in GST or any other statutory levies during contractual delivery period shall be to BHEL's account**

## G4 VALIDITY OF OFFERS:

The offers shall be kept open for acceptance 'for number of days mentioned in special terms and conditions' from the date of opening of the tender. In case of extension of tender opening date, the validity shall be suitably revised.

## G5 SCOPE OF SUPPLY

Material shall be supplied as per the applicable latest Technical Delivery Conditions (TDC)/ Material Standard requirements/BPS/Drawing and other requirement as given in the Tender

Enquiry. National & International material Standards shall have to be arranged by vendors themselves.

## G6 REPLACEMENT OF REJECTION

If the material is rejected due to defective workmanship during inspection or at the time of actual use, within the guarantee period (i.e. as per clause 13), the rejected material shall be replaced by the supplier. Corresponding quantity shall be treated as unsupplied against respective purchase order till replacement is received at BHEL. If the material is found defective and rejected during use for which payment has already been released the rejected quantity shall be supplied free of cost by the vendor within a month of intimation of the rejection by BHEL.

Lifting of rejected material is under Supplier's scope. BHEL will inform related invoice, qty etc to supplier. Supplier is expected to give the plan to lift and advance intimation when visiting to lift the material. Material should be lifted within one month from date of intimation. After one month BHEL will not be responsible for rejected material. BHEL may decide to send the rejected material on to Pay basis to supplier. Any leniency/ unresponsiveness/delay on part of supplier may lead to appropriate action by BHEL. Any request to postpone in written may be considered but replacement should not be linked with lifting of material.

## G7 SUPPLIED MATERIAL ADJUSTMENT

Item/s pending in previous PO has to be billed in previous PO only. Otherwise BHEL will be free to adjust the supplies in previous PO. Any implication of tax will be on supplier's account. For this it is desirable to reconcile the pending PO statement every month/frequently. BHEL will give pending PO statement every month. This can also be viewed at Portal (http://vis.bheltry.co.in/mm/index.jsp).

## G8 DELIVERY SCHEDULE

Supplies shall be affected and completed as per schedule mentioned in special terms and conditions. **Further, BHEL may release delivery schedule from time to time based upon our requirement with mutual understanding.** Vendor shall be required to complete the order as per the BHEL schedule requested.

## G9 ACCESS TO MANUFACTURING PREMISES:

While Purchase Orders placed on the vendor are under execution, authorized representatives of BHEL shall be allowed free access to the manufacturing facilities for the purpose of inspection or monitoring the progress of purchase orders. This access will also be extended to representatives of BHEL's customers accompanying the authorized representative/s of BHEL (which shall be intimated in advance), if our contractual requirements with our customers call for the same.

## G10 TERMS OF PAYMENT:

a. Due payment against supplies received shall be due after 30 days of receipt and acceptance of material and shall be paid within next 15 days' period. In case of any deviation from standard payment term mentioned, BHEL at its discretion may load on the item price at "Base rate of SBI (as applicable on the date of bid opening; Techno-commercial bid opening) + 6% shall be considered for loading for the period of relaxation sought by bidders.
b. Documents to be submitted (if applicable)
    i. Tax invoice (Invoice shall be GST compliant and should contains all the required information such as GST No, HSN code etc.)
    ii. Transporter copy along with material/consignment.
    iii. Material Test Certificates (MTC) and
    iv. Compliance Certificate.
c. GST registration number is to be submitted by qualified vendor as per GST law.
d. It is mandatory to mention proper material codes in the invoices and separate invoices to be raised for different POs.

e. ***BHEL releases payment through EFT mode ONLY. Necessary details may please be submitted by filling required format before release of payment.***

f. ***Conditions relating to release of GST portion:***
Payment of GST portion will be released to vendor only upon completion of statutory requirement and further subject to following:
The reimbursement of GST portion of invoice shall be released only upon: -

1. vendor declaring such invoice in his GSTR-1 and
2. receipt of goods and Tax invoice by BHEL and
3. Confirmation of payment of GST thereon by vendor on GSTN portal.
4. Above is subject to receipt of goods/service and tax invoice thereof along with vendor declaring invoice in his return and paying GST within timeline prescribed for availing ITC by BHEL.

- In case GST credit is delayed/denied to BHEL due to non/delayed receipt of goods and/or tax invoice or expiry of timeline prescribed in GST law for availing such ITC, or any other reasons not attributable to BHEL, GST amount shall be recoverable from vendor along with interest levied / leviable on BHEL.

- In case vendor delays declaring such invoice in his return and GST credit availed by BHEL is denied or reversed subsequently as per GST law, GST amount paid by BHEL towards such ITC reversal as per GST law shall be recoverable from vendor/contractor alongwith interest levied / leviable on BHEL.

## G11 AVAILING INPUT TAX CREDIT (ITC) BY BHEL:

1. Since ITC can be availed only when BHEL is in possession of GST Tax invoice and after receipt of goods. Thus, vendor to ensure timely dispatch of goods and Tax invoice. It may be noted that in case of any delay in receipt of Tax Invoice and/or receipt of goods, the ITC availment by BHEL will get delayed thus entailing additional cash outflow & may even get denied if ITC availment timelines are breached.

2. Further ITC can be availed only when vendor has declared such invoice in his outward supply Return GSTR-1 and after GST thereon has been paid by him at the time of filing of monthly Return.

3. If GST credit is delayed/denied to BHEL due to non/delayed receipt of goods and/or tax invoice or expiry of timeline prescribed in GST law for availing such ITC, or any other reasons not attributable to BHEL, GST amount shall be recoverable from vendor along with interest levied/leviable on BHEL.

4. Further, in case vendor delays declaring such invoice in his return and GST credit availed by BHEL is denied or reversed subsequently as per GST law, GST amount paid by BHEL towards such ITC reversal as per GST law shall be recoverable from vendor/contractor along with interest levied/leviable on BHEL.

## G12 LIABILITY UNDER REVERSE CHARGE (RCM)

Any GST liability arising on BHEL under Reverse Charge (RCM) before actual receipt of goods and/ or Invoice thereof would be subject to recovery of Interest leviable for the period between the date of such liability and actual date of eligibility of ITC based on receipt of goods, receipt of Invoices and other conditions specified in GST Law as applicable.

## G13 INSPECTION

a. All required tests as called in referred material standard/BHEL/TDC/drawing etc shall be carried out by vendor at no extra cost. **BHEL may decide to inspect itself/arrange third party at vendors' works itself as and when necessary with prior intimation to the vendor.** No additional charges shall be claimed for such inspections.
b. Third party inspection charges will be borne by BHEL. Moreover, all required infrastructure (testing, tools etc) have to be arranged by supplier.
c. **Vendor will give inspection call sufficiently in advance considering the delivery period stipulated in the purchase order.**
d. Material Test Certificates (MTC), Inspection reports and Compliance/Guarantee Certificate are to be provided along with the supplies.
e. Latest applicable revisions of standards/procedures to be referred. International/National standards are to be arranged by vendor.
f. Any inspection carried out before supply by vendor/incoming stage at BHEL notwithstanding, if any defect/non-conformity is noted during processing, the same shall be attended/replaced by vendor at no extra cost.
g. Necessary tooling including thread gauges etc. have to be arranged by vendor. Only in exceptional cases, based on BHEL discretions item/nature, BHEL may consider request to provide gauges if available with BHEL. But in no case this shall be linked with delivery of material.
h. BHEL representative from unit or CQ is authorized to carry out audits along with TPIA at vendor's works before clearing the items for dispatch.

## G14 PREFERENCES FOR MSE's

Preferences as mentioned in "Public Procurement Policy for Micro and Small Enterprises (MSEs) Order, 2012" & "Public Procurement Policy for Micro and Small Enterprises (MSEs) Amendment Order, 2018", shall be given to Micro and Small enterprises.

Main points which are mentioned in the above orders are as follows:

- 25% Procurement of the tender value shall be made from MSE (Micro, Small Enterprises) firms.
- 25% of the 25% quantity (i.e. 6.25% of the tender quantity) offered to the MSE's shall be reserved for MSE's owned by SC/STs. Failure to participate by any MSE owned by SC/ST's; this 6.25% quantity shall be procured from other MSEs.
- 3% from within the 25% quantity offered to the MSE's shall be reserved for women owned MSE's. Failure to participate by any MSE owned by women; this 3% quantity shall be procured from other MSEs.
- EMD shall be exempted for MSE's. All these benefits are subject to production of all statutory documents
- In tender, participating Micro and Small Enterprises quoting price within price band of L1+15 per cent shall also be allowed to supply a portion of requirement by bringing down their price to L1 price in a situation where L1 price is from someone other than a Micro and Small Enterprise and

such Micro and Small Enterprise shall be allowed to supply up to 25 per cent of total tendered value. In case of more than one such Micro and Small Enterprise, the supply shall be shared proportionately (to tendered quantity).

**"MSE suppliers can avail the intended benefits only if they submit along with the offer UAM (Udyog Aadhaar Memorandum), attested copies of either EM II certificate having deemed validity (five years from the date of issue of acknowledgement in EM II) or valid NSIC certificate or EM II certificate along with attested copy of a CA certificate (Format enclosed at Annexure -1 where deemed validity of EM II certificate of five years has expired) applicable for the relevant financial year (latest audited). Date to be reckoned for determining the deemed validity will be the date of bid opening (Part 1 in case of two part bid). Non submission of such documents will lead to consideration of their bid at par with other bidders. No benefit shall be applicable for this enquiry if any deficiency in the above required documents is not submitted before price bid opening. If the tender is to be submitted through e-procurement portal, then the above required documents are to be uploaded on the portal. Documents should be notarized or attested by a Gazetted officer.**

## G15 GUARANTEE/WARRANTEE

Vendor shall give a guarantee of 18 months from the date of dispatch or 12 months from date of receipt, against manufacturing defects, whichever is earlier. In case of non-acceptance of this term bid will be rejected.

## G16 PENALTY FOR LATE DELIVERY

'Time is the essence of the contract'. As such, delivery of goods specified in the Purchase Orders released under the scope of this contract shall be made within the time limit prescribed therein. Penalty for late delivery will be applicable @ 0.5% per week or part thereof subject to a maximum of 10.0 %.

If any vendor does not accept LD **½% of the supply for each week of delay subject to a maximum of 5%,** their offer is likely to be rejected by BHEL and the price bid shall not be opened. Bidders accepting for 10% LD shall not be loaded on account of LD. However, bidders who offer any other % LD [between 5% to 10%] shall be loaded @ % deviation from 10% and their accepted %. e.g. If a bidder accepts for a max of 7% LD only, their offer would be loaded @ 3% (10 – 7 = 3).

BHEL reserves the right to receive or not receive the material after the due date of PO. Applicable GST shall also be recovered from suppliers/contractors on LD amount. For this Debit note will be issued by BHEL indicating the respective supply invoice number.

## G17 RISK PURCHASE

BHEL shall be entitled to terminate the contract/pending POs at any stage and to purchase elsewhere at the risk and cost of the vendor, either the whole of the goods or any part thereof which the supplier has failed to deliver or dispatch within the time stipulated as aforesaid. Vendor shall be liable for the losses, which BHEL may sustain by way of such risk purchase.

## G18 SUB-CONTRACT

The purchase order or any part thereof shall not be sub-contracted, assigned or otherwise transferred without previously obtaining the BHEL's consent in writing.

## G19 FORCE MAJEURE

If at any time during the continuance of the contract, the performance in which or in any part by either party of any obligations under the contract are prevented or delayed by reason of any war, hostilities, acts of public enemy, civil commotion, sabotage, fires, explosions, epidemics, quarantine restrictions, or acts of God (hereinafter referred to "an events" then provided the notice of happening of any such event is given by either party to the other within 21 days of the occurrence thereof, neither party shall by reason of such event be entitled to terminate the contract nor shall either party have any claim for damages against the other in respect of such non-performance and delay in performance and delivery under the contract shall be resumed as soon as practicable after such event has come to an end or ceased to exist. If the performance in whole or part of any obligation under the contract is prevented or delayed by reason of any such event, claims of extension of time shall be granted for periods considered reasonable by BHEL subject to prior notification by the vendor to BHEL of the particulars of the event and supply to BHEL, if required, of any supporting evidence. Any waiver of time in respect of partial installment shall not be deemed a waiver of time in respect of remaining deliveries.

## G20 DISPUTES

In the event of any dispute and/or difference arising between the Vendor and BHEL as to interpretation and/or execution of the contract and/or the respective rights and liabilities of the parties, such disputes and/or differences shall be referred to the sole arbitrator nominated by BHEL. The provisions of the Indian Arbitration Act and the rules there under shall apply to such arbitration. The award passed by the arbitrator shall be final and conclusively binding on all the parties.

## G21 JURISDICTION

The court of the place from where the purchase order is issued during the contractual period shall alone have jurisdiction to decide any dispute arising out of or in connection with the purchase order.

## G22 CLARIFICATIONS

The correspondence exchanged against the tender from both tenderer and BHEL through email/e-procurement are considered as valid document legally though it is not signed. It is treated as valid confirmations made on behalf of the respective company and very much comes under the legal ambit of the business transaction and hence it is binding on both the parties to the business. Any transaction pertaining to the tender from both the parties of business done round the clock irrespective of the office or business hours of the companies, are valid legally and binding on both the parties. This applies to the extent only in such cases where deadline time for transaction is not specifically declared by either or both the parties to the business.

## G23 LOI (Letter of Intent)

BHEL may issue LOI prior to the PO for any reason whatsoever. The LOI in such cases is to be treated as PO for all practical purposes and all the Terms & Conditions of the tender shall be applicable from the date of issue of LOI.

## G24 WORDS AND FIGURES

a. If, in the price structure quoted for the required goods/ services/ works, there is discrepancy between the unit price and the total price (which is obtained by multiplying the unit price by the quantity}, the unit price shall prevail and the total price corrected accordingly, unless in the opinion of the purchaser there is an obvious misplacement of the decimal point in the unit price, in which case the total price as quoted shall govern and the unit price corrected accordingly.
b. If there is an error in a total corresponding to the addition or subtraction of subtotals, the subtotals shall prevail and the total shall be corrected; and
c. If there is a discrepancy between words and figures, the amount in words shall prevail, unless the amount expressed in words is related to an arithmetic error, in which case the amount in figures shall prevail subject of (a) and (b) above.
d. If there is such discrepancy in an offer, the same shall be conveyed to the bidder with target date upto which the bidder has to send his acceptance on the above lines and if the bidder does not agree to the decision of the purchaser, the bid is liable to be ignored.
e. Bids should be free from correction, overwriting, using corrective fluid, etc. Any interlineation, cutting, erasure or overwriting shall be valid only if they are attested under full signature(s) of person(s) signing the bid else shall be liable for rejection.
f. All overwriting/cutting, etc will be numbered by bid opening officials and announced during bid opening.

## G25 GENERAL

a. BHEL will not be bound by any power of attorney granted by the vendors or by changes in the composition of the firm made subsequent to the execution of the contract. They may, however, recognize such power of attorney and changes after obtaining proper legal advice, the cost of which will be chargeable to the vendor concerned.
b. BHEL reserves the right to extend the due date of opening, which shall be informed. Validity of offer shall be deemed to be revised accordingly.
c. BHEL reserves the right to accept or reject any part or whole of the tender of a bidder by assigning a valid reason thereof. BHEL reserves the right to cancel the tender without assigning any reason thereof and without any obligation before any commitment.
d. If possible, please submit soft copy of price quotation [copied on a blank CD of standard make] put in the sealed offer.
e. Acceptance of all terms and conditions, in the form of signed copy of T&C or confirmation separately written, shall be submitted along with quotation. If nothing is mentioned, it shall be concluded that terms and conditions are acceptable.
f. BHEL may increase/decrease item/s based on BHEL requirement before price bid opening. Suitable price implication may be asked from suppliers.
g. BHEL may drop item/items from tender at any stage of tender before placing PO. BHEL may also delete PO with consent with supplier within delivery date of PO.
h. After releasing PO, it is assumed that supplier has accepted PO if we do not receive acknowledgement from supplier within 5 days of date of PO.
i. Any term is special tender terms and conditions will supersede the GCC.
j. BHEL reserves the right to negotiate with L1 bidder/s.

## G26 BANNED FIRMS

The offers of the bidders who are on the banned list as also the offer of the bidders, who engage in the services of the banned firms, shall be rejected. The list of banned firms is available on BHEL website www.bhel.com.

## G27 DISCLAIMER CLAUSE: (Only for E procurement)

Neither the Organization (Bharat Heavy Electricals Ltd.) nor the service provider (M/s e Procurement Technologies limited) is responsible for any failure of submission of bids due to failure of internet or other connectivity problems or reasons thereof.

## G28 FRAUD PREVENTION POLICY

The Bidder along with its associate / collaborators / sub-contractors / sub-vendors / consultants / service providers shall strictly adhere to BHEL Fraud Prevention Policy displayed on BHEL website http://www.bhel.com and shall immediately bring to the notice of BHEL management about any fraud or suspected fraud as soon as it comes to their notice.

## G29 REVERSE AUCTION

BHEL reserves the right to go for Reverse Auction (RA) (Guidelines as available on www.bhel.com) instead of opening the sealed envelope price bid, submitted by the bidder. This will be decided after techno-commercial evaluation. Bidders to give their acceptance with the offer for participation in RA. Non-acceptance to participate in RA may result in non-consideration of their bids, in case BHEL decides to go for RA.

Those bidders who have given their acceptance to participate in Reverse Auction will have to necessarily submit 'Process compliance form' (to the designated service provider) as well as 'Online sealed bid' in the Reverse Auction. Non-submission of 'Process compliance form' or 'Online sealed bid' by the agreed bidder(s) will be considered as tampering of the tender process and will invite action by BHEL as per extant guidelines for suspension of business dealings with suppliers/ contractors (as available on www.bhel.com).

The bidders have to necessarily submit online sealed bid less than or equal to their envelope sealed price bid already submitted to BHEL along with the offer. The envelope sealed price bid of successful L1 bidder in RA, if conducted, shall also be opened after RA and the order will be placed on lower of the two bids (RA closing price & envelope sealed price) thus obtained. The bidder having submitted this offer specifically agrees to this condition and undertakes to execute the contract on thus awarded rates.
If it is found that L1 bidder has quoted higher in online sealed bid in comparison to envelope sealed bid for any item(s), the bidder will be issued a warning letter to this effect. However, if the same bidder again defaults on this count in any subsequent tender in the unit, it will be considered as fraud and will invite action by BHEL as per extant guidelines for suspension of business dealings with suppliers/ contractors (as available on www.bhel.com).

## G30 SUSPENSION OF BUSINESS DEALINGS WITH DEFAULTERS

The offers of the bidders who are under suspension as also the offers of the bidders, who engage the services of the banned firms, shall be rejected. The list of banned firms is available on BHEL web site **www.bhel.com.**

1.0 Integrity commitment, performance of the contract and punitive action thereof:

1.1. Commitment by BHEL:

BHEL commits to take all measures necessary to prevent corruption in connection with the tender process and execution of the contract. BHEL will during the tender process treat all Bidder(s) in a transparent and fair manner, and with equity.

1.2. Commitment by Bidder/ Supplier/ Contractor:

1.2.1. The bidder/ supplier/ contractor commit to take all measures to prevent corruption and will not directly or indirectly influence any decision or benefit which he is not legally entitled to nor will act or omit in any manner which tantamount to an offence punishable under any provision of the Indian Penal Code, 1860 or any other law in force in India.

1.2.2. The bidder/ supplier/ contractor will, when presenting his bid, disclose any and all payments he has made, and is committed to or intends to make to agents, brokers or any other intermediaries in connection with the award of the contract and shall adhere to relevant guidelines issued from time to time by Govt. of India/ BHEL.
1.2.3. The bidder/ supplier/ contractor will perform/ execute the contract as per the contract terms & conditions and will not default without any reasonable cause, which causes loss of business/ money/ reputation, to BHEL.

If any bidder/ supplier/ contractor during pre-tendering/ tendering/ post tendering/ award/ execution/ post-execution stage indulges in mal-practices, cheating, bribery, fraud or and other misconduct or formation of cartel so as to influence the bidding process or influence the price or acts or omits in any manner which tantamount to an offence punishable under any provision of the Indian Penal Code, 1860 or any other law in force in India, then, action may be taken against such bidder/ supplier/ contractor as per extant guidelines of the company available on www. bhel.com and/or under applicable legal provisions

## G31 PREFERENCE TO MAKE IN INDIA

For this procurement, Public Procurement (Preference to Make in India), Order 2017 dated 15.06.2017, 28.05.2018 & 29.05.2019 and subsequent Orders issued by the respective Nodal Ministry shall be applicable even if issued after issue of this NIT before finalization of contract/PO/WO against this NIT.

In the event of any Nodal Ministry prescribing higher or lower percentage of purchase preference and / or local content in respect of this procurement, same shall be applicable.

Annexure – I

## Certificate by Chartered Accountant on letter head

This is to Certify that M/S ....., (hereinafter referred to as 'company') having its registered office at ..... is registered under MSMED Act 2006, (Entrepreneur Memorandum No (Part-11) ..... dtd:....., Category:..... (Micro/Small)). (Copy enclosed).

Further verified from the Books of Accounts that the investment of the company as per the latest audited financial year ..... as per MSMED Act 2006 is as follows:

1. **For Manufacturing Enterprises:** Investment in plant and machinery (i.e. original cost **excluding land and building and the items specified by the Ministry of Small Scale Industries vide its** notification No.S.0.1722(E) dated October 5, 2006 :
   Rs.....Lacs
2. **For Service Enterprises:** Investment in equipment (original cost excluding land and building and **furniture, fittings and other items not direCtly related to the service rendered or as may be notified under the MSMED** Act, 2006:
   Rs.....Lacs

**(Strike off whichever is not applicable)**

The above investment of Rs.....Lacs is within permissible limit of Rs.....Lacs for .....Micro / Small (Strike off which is not applicable) Category under MSMED Act 2006.

Or

The company has been graduated from its original category {Micro/ Small) (Strike off which is not applicable) and the date of graduation of such enterprise from its original category is ..... (dd/mm/yyyy) which is within the period of 3 years from the date of graduation of such enterprise from its original category as notified vide S.O. No.3322(E) dated 01.11.2013 published in the gazette notification dated 04.11.2013 by Ministry of MSME.

Date:

(Signature)

Name-

Membership number-

Seal of Chartered Accountant