BHARAT HEAVY ELECTRICALS LIMITED
MM / RM / PURCHASE / C&F
BHEL / TRICHY-620 014.

ANNEXURE-A Rev 01
ENQ.No.14020000XX

Dt.29-09-2020

Enquiry Terms & Conditions for Supply of Formed Fittings

Note: This Annexure has to be mandatorily filled & signed by the manufacturer (or) mill and submitted along with Technical bid.

Any deviation to the below mentioned terms shall be stated specifically in the comments column for each term and also in case of acceptance to our terms, it will be construed that the whole term is understood and agreed in totality without any deviation. (If otherwise mentioned).

Sl No	BHEL Requirements	Supplier Comments
01	**Material specification:** Supply of **Formed Fittings** shall be made strictly as per **Specifications, TDC, Drawings** as mentioned in the enquiry.	
02	**Specification, Size & Quantity:** a) All the **Formed Fittings** are to be supplied fully meeting the applicable **TDC 423/09, Drawings & Specification**. If there is any deviation, the same should be mentioned clearly in the offer itself. b) TC in FORM IIIC, works TC, Raw Material TC, UT report, LPI report and other test certificates as called in TDC 423/09 shall be sent along with supply. c) Before start of production the manufacturer shall be submit a Manufacturing and Inspection Plan (MIP) to **BHEL product QA** for approval **(Being a New Supplier)**. d) **Confirmation for Pre-Qualification Requirements (PQR) along with all necessary documents shall be submitted.** e) Supply of P91 Fittings shall be as per latest IBR amendment dt.15.04.15. f) Inspection by authorized inspection agency as listed in the annexure enclosed. g) Ends shall be protected with suitable End covers. h) Quantity shall be as given in enquiry.	
03	**Offer Submission:** ➢ Offer is to be submitted in **TWO part bids system** (Technical bid + Price bid) in the E-Procurement portal. Scan copy of the filled Annexure-A, Tender documents etc., shall be uploaded in the EPS portal. ➢ The offer is to be submitted within **2.00 P.M** on or before the due date. ➢ After the scrutiny of technical bids, price bids of only techno-commercially qualified offer shall be opened with prior intimation.	
04	**Authorization for participation in EPS portal through DSC:** **i) E-Tender Participation requirements** Either Principal or authorized agent shall register their Digital Signature Certificate (DSC) (Class 3- SHA2-2048 BIT- SIGNING & ENCRYPTION). Suppliers are advised to go through the FAQ available in the web portal **(www.bhel.abcprocure.com).** DSC shall be registered for the authorized person and all transaction done using that DSC against our tenders shall be taken as valid communication and shall be binding on principal/agent and is valid legally.	
05	**Validity:** The offers shall be kept open for acceptance for 90 days from the date of Tender opening. Once the tenders are submitted, rates cannot be changed on any grounds.	

06	**<u>Delivery</u>**: The offer shall clearly indicate delivery period in **fixed number of weeks/Months** from the date of Purchase Order.	
07	**<u>Goods and Service Tax (GST)</u>** **<u>Indigenous suppliers:</u>** 1. Response to Tenders for Indigenous supplier will be entertained only if the vendor has a valid GST registration No (GSTIN) which should be clearly mentioned in the offer. If the dealer is exempted from GST registration, a declaration with due supporting documents need to be furnished for considering the offer. Dealers under composition scheme should declare that he is a composition dealer supported by the screen shot taken from GST portal. The dealer has to submit necessary documents if there is any change in status under GST. 2.Supplier shall mention their GSTIN in all their invoices (incl. credit Notes, Debit Notes) and invoices shall be in the format as specified/prescribed under GST laws. Invoices shall necessarily contain Invoice number (in case of multiple numbering system is being followed for billing like SAP invoice no, commercial invoice no etc., then the Invoice No. which is linked/uploaded in GSTN network shall be clearly indicated), Billed to party (with GSTIN) & Shipped to party details, item description as per PO, Quantity, Rate, Value, applicable taxes with nomenclature (like IGST, SGST, CGST & UTGST) separately, HSN/ SAC Code, Place of Supply etc. 3.All invoices shall bear the HSN Code for each item separately (Harmonized System of Nomenclature)/ SAC code (Services Accounting Code). 4.Invoices will be processed only upon completion of statutory requirement and further subject to following: a. Vendor declaring such invoice in Form GST ANX-1 b. Receipt of Goods or Services and Tax invoice by BHEL 5.As the continuous uploading of tax invoices in GSTN portal (in GST ANX-1) is available for all (i.e. both Small & Large) tax payers under proposed new GST Return System, all invoices raised on BHEL may be uploaded immediately in GST portal on despatch of material /rendering of services. The supplier shall ensure availability of Invoice in GST portal before submission of invoice to BHEL.Invoices will be admitted by BHEL only if the invoices are available in GSTN portal (in BHEL's GST ANX-2). 6.In case of discrepancy in the data uploaded by the supplier in the GSTN portal or in case of any shortages or rejection in the supply, then BHEL will not be able to avail the tax credit and will notify the supplier of the same. Supplier has to rectify the data discrepancy in the GSTN portal or issue credit note or debit note (details also to be uploaded in GSTN portal) for the shortages or rejections in the supplies or additional claims, within the calendar month informed by BHEL. 7.In cases where invoice details have been uploaded by the vendor but failed to remit the GST amount to GST Department (Form PMT-08 or Form GST RET-01 to be submitted) within stipulated time, then GST paid on the invoices pertaining to the month for which GST return not filed by the vendor will be recovered from the vendor along with the applicable interest(currently 24% p.a) and all subsequent bills of the vendor will not be processed till filing of the GST return by the vendor 8. In case GST credit is denied to BHEL due to non-receipt or delayed receipt of goods and/ or tax invoice or expiry of timeline prescribed in GST law for availing such ITC, or any other reasons not attributable to BHEL, GST amount claimed in the invoice shall be disallowed to the vendor. 9.Where any GST liability arising on BHEL under Reverse Charge (RCM), the vendor has to submit the invoices to BHEL well within the timeline prescribed in GST Law, to enable BHEL to discharge the GST liability. If there is a delay in submission of invoice by the vendor resulting in delayed payment of GST by BHEL along with Interest, then such Interest payable or paid shall be recovered from the vendor. 10.Under GST regime, BHEL has to discharge GST liability on LD recovered from suppliers/contracts. Hence applicable GST shall also be recoverable from suppliers/contractors on LD amount. For this Tax Invoice will be issued by BHEL indicating the respective supply invoice number. 11.GST TDS will be deducted as per Section 51 of CGST Act 2017 and in line with Notification 50/2018 – Central Tax dated 13.09.2018. GST TDS certificate which will be generated in GST portal subsequent to vendor accepting the TDS deduction in the GST portal, will be issued to the vendor.	
08	**<u>Terms of Delivery:</u>** **A. <u>INDIGENOUS:</u>** a) Bidders should submit their offer for FOR Destination -BHEL Stores, Trichy. The quote should be inclusive of all charges, including testing, packing & forwarding, inspection, Insurance etc. Ex-Works and other terms of delivery will not be considered. b) The soft copies of the Invoice, LR copy & Test certificates shall be forwarded to BHEL immediately after dispatch.	

09	**<u>Payment terms:</u>** **<u>Indigenous:</u>** BHEL Payment term is 100% direct EFT payment after 60 days from the date of receipt and acceptance of materials.	
10	**<u>Liquidated Damage:</u>** 1. **Penalty will be levied @ 0.5% of the undelivered portion per week of delay or part thereof subject to a maximum of 10% of the total order value.** 2. Any deviation from the above LD clause, loading will be applied to the extent to which it is not agreed by the bidder (at offered value). 3. **Under GST regime, BHEL has to discharge GST liability on LD recovered from suppliers/contractors. Hence applicable GST shall also be recoverable from suppliers/contractors on LD amount. For this Debit note will be issued by BHEL indicating the respective supply invoice number.** 4. INDIGENOUS: For **"**FOR Delivery terms", Lorry way bill date will be taken for LD calculation.	
11	**<u>Risk Purchase clause:</u>** BHEL at its option will be entitled to terminate the contract and to purchase elsewhere at the risk and cost of the seller either the whole of the goods or any part which the supplier has failed to deliver or despatch within the time stipulated as aforesaid or if the same were not available, the best and the nearest available substitute thereof. The supplier shall be liable for any loss which BHEL may sustain by reason of such risk purchases in addition to LD at the maximum rate mentioned in the LD clause above. Confirm your acceptance.	
11	**<u>Warrantee / Guarantee:</u>** Supplier to accept guarantee/warrantee of "18 months from dispatch or 12 months from commissioning, whichever is earlier". Any deviation to this may lead to rejection of the offer.	
13	**<u>Non-Disclosure Agreement(NDA):</u>** The bidders shall enter into the Non-disclosure agreement totally voluntarily, with full knowledge of its meaning and without duress. (Format attached).	
14	**<u>Patent Right:</u>** The supplier shall, at all times, indemnify and keep indemnified the purchaser, free of cost, against all claims which may arise in respect of goods & services to be provided by the supplier under the contract for infringement of any intellectual property rights or any other right protected by patent, registration of designs or trademarks. In the event of any such claim in respect of alleged breach of patent, registered designs, trademarks etc. being made against the purchaser, the purchaser shall notify the supplier of the same and the supplier shall, at his own expenses take care of the same for settlement without any liability to the purchaser.	
15	**<u>Evaluation Criteria:</u>** The offers of both import vendors and indigenous vendors will be evaluated on total landed cost to BHEL, Trichy. The evaluation details with respect to the import & indigenous vendors is detailed below: **I) <u>Indigenous Vendors:</u>** **Total Landed cost = FOR Rate in INR (A) + Applicable Taxes (B) + Loading for payment term & LD (C) – Applicable input tax credit (D)** **A.** Indigenous vendors submit offers on Free on Road (FOR), Trichy in INR. **B.** (SGST, CGST, UGST & IGST) on (BASE PRICE+GST) and any other charges quoted by indigenous vendors will be added to the base price. **C.** Loading for payment terms & non-acceptance of Liquidated Damages (LD) will be added to the FOR value for arriving the landed rate. **D.** However, input credit is availed for GST taxes, hence the same is excluded for arriving at the landed cost. Note: "In the course of evaluation, if more than one bidder happens to occupy L1 status, effective L1 will be decided by soliciting discounts from the respective L1 bidders. In case more than one bidder happens to occupy the L1 status even after soliciting discounts, the L1 bidder shall be decided by a toss/draw of lots, in the presence of the respective L1 bidders or their representatives. Ranking will be done accordingly. BHEL decision in such situations shall be final and binding".	

16	**General condition:** a) In addition to TCs in relevant IBR forms corresponding mill TCs should also be provided along with dispatch of Formed Fittings. Two sets of original and one copy of all such TCs are to be provided to BHEL, Trichy. b) Material is to be inspected by third party inspection agency as approved by IBR and test certificate are to be countersigned by respective Inspection agency in case the Mill is not approved by IBR. c) We require the shipment of the Formed Fittings to be as per the dates mentioned against the individual items in the enquiry. d) No revision of prices will be entertained after the tenders are opened. e) For the evaluation purposes, exchange rate (TT selling rate of SBI) as on schedule date of tender opening (Part I, i.e technical bid, in case of two part bid) shall be considered. f) BHEL will consider the ranking after the loading is applied as referred above wherever deviations are observed. g) Lowest price received against BHEL tenders need not be the technically acceptable one and in that case, BHEL reserves the right not to consider the same. h) BHEL reserves the right to negotiate L1 rate or re-float the tender opened if L1 price is not the lowest acceptable price to them inter-alia other reasons. i) In the event of our customer order covering this tender being cancelled / placed on hold / otherwise modified, BHEL would be constrained to accordingly cancel / hold / modify the tender / your purchase order at any stage of execution. j) Offer will be evaluated based on Landed cost to BHEL- Trichy on item basis. k) No payment will be made for the excess quantity. l) Offer should be submitted only as per the Unit of Measurement (UOM) specified in the enquiry. m) The offers of the bidders who are on the banned list as also the offer of bidders who engage the services of the banned firms, shall be rejected. The list of banned firms is available on the BHEL website - www.bhel.com. n) Documents not signed and stamped by the authorized signatory of the bidder shall not be accepted and considered for registration / evaluation of the bid etc. o) Any additional documents submitted by supplier / bidder, during processing of registration application / tender or after placement of order, shall not be accepted unless it is submitted with forwarding letter and duly signed and stamped as mentioned above. p) The bidder shall submit his response through bid submission to the tender on e-procurement platform at http//bhel.abcprocure.com. The bidder would be required to register on the e-procurement market place https:// bhel.abcprocure.com and submit their bids online. SEALED COVER BIDS / E-MAILS / FAX / MANUAL OFFERS WILL NOT BE ACCEPTED.	
17	**Fraud Prevention Policy** "The bidder along with its associate/collaborators/sub-contractors /consultants/service providers shall strictly adhere to BHEL Fraud prevention policy displayed on BHEL website htpp://www.bhel.com and shall immediately bring to the notice of BHEL Management about fraud or suspected fraud as soon as it comes to their notice."	
18	**Cartel Formation:** All the firms should desist from forming cartel as the practice is prohibited under Section 3(3) (a) & (d) of the competition Act 2002. If any such instance is observed during this tender will attract disciplinary action as per BHEL policies.	

19	**<u>Resolution of Disputes:</u>** a. If dispute or difference of any kind shall arise between the Purchaser/Consignee and the supplier in connection with or relating to the contract, the parties shall make every effort to resolve the same amicably by mutual consultations. b. If the parties fail to resolve their dispute or difference by such mutual consultation within 30 days of its occurrence, then, unless otherwise provided in the contract, either the Purchaser/Consignee or the supplier may give notice to the other party of its intention to commence arbitration, as hereinafter provided the applicable arbitration procedure will be as per the Arbitration and Conciliation Act, 1996 of India. In the case of a dispute or difference arising between the Purchaser/Consignee and a domestic Supplier relating to any matter arising out of or connected with the contract, such dispute or difference shall be referred to the sole arbitration of an officer in BHEL Trichy, appointed to be the arbitrator by the General Manager/MM BHEL Trichy. The award of the arbitrator shall be final and binding on the parties to the contract subject to the provision that the Arbitrator shall give reasoned award in case the value of claim in reference exceeds Rupees One lakhs (Rs. 1,00,000/-) c. Venue of Arbitration: The venue of arbitration shall be the place from where the contract has been issued, i.e., BHEL Trichy. **d.** Jurisdiction of the court will be from the place where the tender enquiry document has been issued, i.e., Trichy, India.	
20	**<u>In the event of Force Majeure:</u>** a. Notwithstanding the provisions contained in other clauses, the supplier shall not be liable for imposition of any such sanction so long the delay and/or failure of the supplier in fulfilling its obligations under the contract is the result of an event of Force Majeure. For purposes of this clause, Force Majeure means an event beyond the control of the supplier and not involving the supplier's fault or negligence and which is not foreseeable and not brought about at the instance of the party claiming to be affected by such event and which has caused the non – performance or delay in performance. Such events may include, but are not restricted to, wars or revolutions, hostility, acts of public enemy, civil commotion, sabotage, fires, floods, explosions, epidemics, quarantine restrictions, strikes excluding by its employees, lockouts excluding by its management, freight embargoes and Acts of GOD. b. If a Force Majeure situation arises, the supplier shall promptly notify the Purchaser/Consignee in writing of such conditions and the cause thereof within twenty-one days of occurrence of such event. Unless otherwise directed by the Purchaser/Consignee in writing, the supplier shall continue to perform its obligations under the contract as far as reasonably practical, and shall seek all reasonable alternative means for performance not prevented by the Force Majeure event. c. If the performance in whole or in part or any obligation under this contract is prevented or delayed by any reason of Force Majeure for a period exceeding sixty days, either party may at its option terminate the contract without any financial repercussion on either side. **d.** In case due to a Force Majeure event the Purchaser/Consignee is unable to fulfil its contractual commitment and responsibility, the Purchaser/Consignee will notify the supplier accordingly and subsequent actions taken on similar lines described in above sub-paragraphs.	
21	**<u>Execution of the order:</u>** a. BHEL will have the option to pre-inspect the materials at Supplier's works by BHEL's own inspector or by third party agency appointed by BHEL or BHEL" s end customer/s. The mere act of the pre-dispatch inspection (PDI) does not absolve the Supplier from giving the specifications as agreed upon in the Purchase Order. b. In the case of overseas suppliers Inspection call for carrying out the inspection shall be given 30 days before the scheduled contract delivery date. The Inspection date/s given by the Supplier shall be on firm basis. For local Suppliers the Notice period of Inspection shall be 10 working days In the event of any short supply, it shall be the responsibility of the supplier to deliver such short supplied/ missing items on Free-of-Cost basis at BHEL stores, including customs clearances at Indian Ports in the case of foreign supplier.	
22	**<u>Special Provisions for Micro and Small Enterprises (MSE) bidders registered as per MSME act:</u>** **(Subject to participating MSE vendors should meet the tender requirements of BHEL)** ➢ 25% of the tendered quantity is earmarked for MSE suppliers in this tender.	

- Out of the 25% tendered quantity reserved for MSE suppliers, 6.25% shall be earmarked for procurement from MSE owned by SC/ST entrepreneurs and 3% shall be earmarked for procurement from MSE owned by women.
- In case MSE vendor participating in the tender quotes within the price band of L1 + 15%, they will be allowed to supply the portion of the requirement subject to acceptance of L1 price by MSE vendor. In case of more than one such MSE vendor within the "L1+15% price band", the supply shall be shared proportionately.
- MSE suppliers can avail the intended benefits only if they submit along with the offer, attested copies of either valid EM II certificate having deemed validity (five years from the date of issue of acknowledgement in EM II). Date to be reckoned for determining the deemed validity will be the date of bid opening (Part 1 in case of two-part bid) or valid NSIC certificate or UAM certificate along with attested copy of a CA certificate applicable for the relevant financial year (latest audited). Date to be reckoned for determining the deemed validity will be the date of bid opening (Part 1 in case of two part bid). Non submission of such documents will lead to consideration of their bid at par with other bidders. No benefit shall be applicable for this enquiry if any deficiency in the above required documents are not submitted before price bid opening. Documents should be notarized or attested by a Gazetted officer. However, credentials of all MSE suppliers will be verified before considering the intended benefits for MSE suppliers at the time of tender evaluation. Non submission of such documents will lead to consideration of their bids at par with other bidders and MSE status of such suppliers shall be shifted to Non MSE supplier till the supplier submits these documents.
- In case of any change in the MSE status of the bidder, it shall be the responsibility of the bidder to notify the change as a part of the bid document. If at a later date it comes to the knowledge of BHEL, that the change in the status has not been intimated by the bidder and the order is obtained under the premise of an MSE, then BHEL would cancel the pending order against this tender and take necessary steps for suspension of the business dealing with the bidder as per the procurement policy of BHEL.
- In case after the bid opening, it is seen that no MSE has become L1, then depending on the nature of the item, if it is not possible to split the tendered items / quantities on account of reasons like customer contract requirements of supplying one make for a given project or technical reasons like tendered items being a system etc., then BHEL would not counter offer the L1 prices even though there may be MSE bidders within the L1+15% band.
- If the L1 vendor happens to be a MSE vendor against any item code, then 100% of the qty (for the respective item code) shall be proposed to order on the L1 (MSE) vendor, even though there may be other MSE vendors within the "L1+15%" price band.
- **Payment for MSE Indigenous vendors will be as per MSMED act, 2006**

23 **Preference to Make in India:**

- For this procurement, the local content to categorize a supplier as a class I local supplier/class II local supplier /Non-local supplier and purchase preference to class I local supplier, is as defined in Public Procurement (Preference to Make in India), Order 2017 dated 04.06.2020 issued by DPIIT. In case of subsequent Orders issued by the respective Nodal Ministry, changing the definition of local content for the items of the NIT, the same shall be applicable even if issued after issue of this NIT, but before opening of part II bids against this NIT.

24 **Enclosures:**

a) Enquiry
b) TDC 423/09
c) Inspection Authorities list
d) NDA Format
e) IBR Amendment
f) Drawings

(On behalf of BHEL)	**SIGNED BY MANUFACTURER / MILL** Name of Mill: Designation / Department: Seal & Signature

BHARAT HEAVY ELECTRICALS LIMITED, TRICHY-14
MATERIALS MANAGEMENT

PQR: C&F/CFFGF: Rev.00 – SAGARDIGHI Date: 01.10.2020

Pre-Qualification requirements (PQR) for the procurement of SA234WPC, SA234WP12CL1 & SA234WP22CL1 Fittings through Open Tender (as per TDC: 0:423/09)

A) Organizational Capability:

1. Manufacturers having Fittings manufacturing facilities are only eligible to participate. Offer from traders, fabricators and stockists are not acceptable and will not be considered for evaluation.
   Vendor to indicate the nature of the firm. Product catalogue shall be submitted.

2. Suppliers shall submit facility report for fittings manufacturing. Suppliers without basic manufacturing facilities in-house, shall not be considered for evaluation. In house facilities for Heat treatment & Non-Destructive Testing are mandatory requirements for consideration of the offer.

3. Source of raw material for the manufacturing shall be from IBR approved well known steel maker or certified by IBR approved inspecting authority (Form-IV to be attached). The supplier shall confirm that the raw material test certificate/s will be furnished along with product test certificate/s.

4. Chemical, Mechanical testing shall be done in house or at Labs certified as per ISO 17025 or Government approved labs.

5. Suppliers shall submit a valid ISO 9001 certificate or Quality management system certificate or Written down procedure.

6. BHEL/End customer reserve the right to inspect the item ordered at any stage at vendor's works and if found not meeting the stipulated conditions, material is liable for rejection.

7. BHEL/End customer reserves the right to inspect the sample at vendor's works for giving clearance before bulk production.

8. BHEL reserves the right to visit supplier's works to audit and inspect to ensure the capability for technical evaluation

B) Technical Competence:

1. Point by point confirmation to the TDC requirements is mandatory for consideration of offer and signed TDC shall be submitted.

2. Suppliers shall submit manufacturing process flow chart (Raw material to finished product) & Manufacturing Quality Plan (MQP) to meet the TDC requirements along with technical bid.

3. Suppliers shall submit the experienced manpower details specific to Manufacturing, Quality and NDE requirements.

C) **Past Experience/ Performance:**

1. Suppliers shall indicate their annual installed capacity for supply of fittings covered in the tendered specifications & it shall be more than the tendered quantity.

2. Suppliers shall have supplied Elbows, Tees, Reducers in the tendered specification. Details of supplies made in recent past detailing the quantity, specification, size & customer details along with the unpriced PO copies, proof of supply (such as invoice and test certificates) covering minimum and maximum sizes in tendered specification SA234WPC/SA105, SA234WP12/SA182F12, SA234WP22/SA182F22 meeting the tendered size requirements shall be submitted.

D) **Financial Soundness:**

1. Indigenous suppliers shall submit Audited copies of annual reports (Balance Sheets), Profit & Loss statement for last four years (or from date of incorporation whichever is less). Proprietary and partnership firms shall submit IT returns for last four years (or from date of incorporation whichever is less).

Necessary supporting documents shall be submitted for meeting each of the above Pre-Qualification Criteria for evaluation of the offers.

BHEL reserves the right to consider/Not-consider the offers based on the evaluation of documents submitted for the above Pre-Qualification Criteria. BHEL also reserves the right to have on-site assessment of the facilities at supplier's works during the bid evaluation.

Technically reviewed
01/10/2020

01/10/20
Prakash Tantuway
DM/MM/RM

PRAKASH TANTUWAY
Deputy Manager
Planning / MM / C & F
BHEL, TRICHY - 620 014

S Shyamaladevi
DM/QA

SHYAMALADEVI .S
Deputy Manager
Quality Ass[illegible]
BHEL, TRIC[illegible] 014

Revision record:
Rev: 00: Supersedes TDC: 5:019 & can be used wherever the old TDC is specified.
Rev: 01: New materials, IGCsT added. UT, Hardness requirement modified. LPI, MPI requirement added.
Rev: 02: Flatness requirement added in clause no: 5.0
Rev: 03: TDC for, Pipe Fittings for NTPC contracts (TDC 0 427), Pipe fittings indigenous supply (TDC 0 422) has been merged with this TDC and named as Butt Welded formed pipe fittings. Cl. 2.0 General removed, scope limited to IBR only and other clauses renumbered. Limits of carbon modified. Aligned with NTPC requirements.
Rev: 04: Restriction in size below 2 in. removed based on Spares requirement.
Rev: 05: Cl: 2.0, 3.0, Revised.
Rev: 06: Product Heading changed. Cl 1.0 Scope and Raw material Sourcing added. Cl.2.0 & 3.0 merged and totally revised. Cl. 4.0, 5.0, 6.0 modified and renumbered.
Rev: 07 Dt: 10/11/2012: Cl 1.0, 2.0 & 5.0 Modified for SS material.
Rev: *08: Dt: 22/09/2017 Title, Clauses 1, 2, 5 & 6 modified; Gr 92 fittings requirements included in Cl 1, 2, 5 & 6; Creep requirements added in Clause 3; Design proof test requirement, if not done earlier, added in general notes..*
Rev: 09: Dt: 21/11/2017 - Cl. 3 & 6.a (15) modified.

1.0 MATERIAL SPECIFICATIONS:

All the codes, standards, specifications, drawings & procedures, etc., referred in this TDC shall be of latest revision as on the date of Enquiry/Purchase Order, whichever is earlier, unless specified otherwise.

- Fittings : Seamless Fittings only (Fittings made by welding are prohibited).
- ASME : Carbon Steel (CS): SA105, SA234; Alloy Steel(AS): SA 234,SA182, ASTM A234; Stainless Steel(SS): SA182, SA403[g]
- Additional Requirements & grades) : As listed below (Supplementary to above material specifications/ standards
- Grade, Size and Quantity : As per Purchase order &/ Drawing.

2.0 MANUFACTURING & TESTING REQUIREMENTS:

2.1 Machined Fittings (fittings machined from castings are prohibited; **Max size permitted 4") – Reducers, Couplings & End caps**

Starting material Rolled or Forged Bars, Killed steel	Heat treatment *as* per starting material specifications	CS – Normalised AS – Normalised & Tempered SS – Solution Annealed
	NDE – UT[d]	To be done after Heat treatment. For size above 40 mm – to be done as per ASTM A388 Acceptance to - ASME Sec.VIII Div.2 Cl.3.3.4
Finished fitting (after machining to required size)	Heat Treatment	Not required.
	NDE (for all sizes)	• MT (100%)- Procedure - As per ASTM E709. No linear indications (surface NDE indication whose length is ≥ three times its width) are acceptable. For WP91/F91 & WP92/F92 Wet MPI shall be done. • LPI – **SS**: Shall be done as per ASTM E165. No linear indications are acceptable. • **SS:** Finished fittings shall be checked for radioactive contamination and reported. Survey meter shall be used to measure at 5 cm near the surface. Acceptance limits: Shall be less than 0.1 milli Rontgen (MR) per hr or 1 micro Sievert per hr.
	Hardness	WP5 - 217 HBW max. SA105 – 137 HBW to 187 HBW. WPB, WPC, WP11/F11, WP12/F12, WP22/F22 – 197 HBW max. WP91/F91 - 195 HBW to 248 HBW – 100% to be checked WP92/F92 – 191 HBW to 269 HBW – 100% to be checked.
	Dimension	ASME B16.9 & ASME B16.11, As per Engineering Drawing
	Bend Test (for IBR items)	Specimen: 19mm. Thickness (t) x 25.4mm width - cold bent 180 deg. over thin section without fracture, mandrel radius: CS :<=6.35 mm.

		AS, SS : <=1.5 times specimen thick.

2.2 Seamless Formed Fittings – Elbows, Tees, Reducers, Dished End (End Cover/ *Cap*)

<table>
<tr><td>Starting material:</td><td>Heat treatment as per starting material specifications</td><td>CS – Normalised
AS – Normalised & Tempered
SS – Solution Annealed</td></tr>
<tr><td>1)Tube & Pipe</td><td>NDE – UT[d]</td><td>Shall be done as per - ASTM E213 with longitudinal notch of 5% wall thickness with min. 0.3 mm and max.1.5 mm. Actual measured notch depth to be specified in Test Certificate.</td></tr>
<tr><td>2)Forged blank (For end covers)</td><td>NDE – UT[d]</td><td>For size above 40 mm
UT shall be done as per - ASTM A388
In acceptance to - ASME Sec.VIII Div.2 Cl.3.3.4</td></tr>
<tr><td>3) Plate</td><td>NDE – UT[d]</td><td>For size above 10mm
SA 578, Acceptance Level - B</td></tr>
<tr><td rowspan="7">Finished fitting (cold/hot forming)</td><td>Heat treatment after forming</td><td>Shall be done as per SA234/SA403.
When Heat Treatment is required it shall be done as per the below table values:
<table>
<tr><th rowspan="2">Material</th><th colspan="2">Heat Treatment Temp,C</th><th colspan="2">Soaking time, hr/in</th></tr>
<tr><th>Normalising</th><th>Tempering</th><th>Normalising</th><th>Tempering</th></tr>
<tr><td>CS-WPB & WPC</td><td>870-900</td><td>-</td><td>1/2</td><td>-</td></tr>
<tr><td>AS-WP11, WP12</td><td>920-950</td><td>655+- 15</td><td>1/2</td><td>1</td></tr>
<tr><td>AS-WP5, WP22</td><td>920-950</td><td>695+- 15</td><td>1/2</td><td>1</td></tr>
<tr><td>AS-WP91</td><td>1040-1080</td><td>750-780</td><td>1/2</td><td>1</td></tr>
<tr><td>AS-ASTM A234 WP 92</td><td>1040-1080</td><td>750-780</td><td>1/2</td><td>1</td></tr>
</table>
Stainless Steel: All grades - Solution Annealed: 1050-1100 Deg C
Soaking time: ½ hr per inch with minimum 15 minutes.
Note
1.Normalising shall be done for a minimum time of 30 min while tempering to be done for a minimum time of 60 min for all above materials except SS.</td></tr>
<tr><td>NDE (for all sizes) – Except for Plate formed Dished end</td><td>• MT (100%) - Shall be as per - ASTM E709 No linear indications are acceptable. For WP91 & WP92 Wet MPI shall be done.
• LPI – SS: Shall be done as per ASTM E165. No linear indications are acceptable.
• SS: Finished fittings shall be checked for radioactive contamination and reported. Survey meter shall be used to measure at 5cm near the surface. Acceptance limits: Shall be less than 0.1 milli Rontgen (MR) per hr or 1 micro Sievert per hr.</td></tr>
<tr><td>NDE–for Plate formed Dished end</td><td>For Plate Formed Dished end – 100% MT as per - ASTM E709 on both inner and outer surfaces of Knuckle radius and weld ends. No linear indications are acceptable.</td></tr>
<tr><td rowspan="3">NDE – UT[d] For OD > or=219mm & W.T >or= 6mm</td><td>If made from Pipe & Tube –
Shall be done as per - ASTM E213 with longitudinal notch of 5% wall thickness with max.1.5mm and min. 0.3mm. Actual measured notch depth to be specified in Test Certificate.</td></tr>
<tr><td>If made from Forging Shall be as per - ASTM A388
In acceptance to - ASME Sec.VIII Div.2 Cl.3.3.4</td></tr>
<tr><td>If made form Plate shall be as per A578 Level-B</td></tr>
<tr><td>Hardness</td><td>WP5 – 217 HBW max.
WPB, WPC, WP11, WP12, WP22 – 197 HBW max.
WP91 - 195 HBW to 248 HBW – 100% to be checked.
WP92 – 191-269 HBW max. – 100% to be checked.</td></tr>
<tr><td>Dimension</td><td>ASME B16.9 & ASME B16.11, As per Engineering drawing.</td></tr>
<tr><td>Bend Test</td><td>Specimen : 25.4 mm x 19 mm thick - cold bent 180 deg. over thin section without fracture, internal radius of bend: CS :<=6.35 mm.
AS, SS: <=1.5 times specimen thick.</td></tr>
</table>

	(if starting material is forged blank) (for IBR items)	

2.3 Forged Fittings – Elbows, Tees, Reducers, Couplings, Flanges & Dished End (End Cover / *Cap*)

Shall be forged to the shape with a minimum forge reduction ratio of 1:4. Fitting shall not be machined from a forged block.

<table>
<tr><td>Starting material:
Rolled or forged Bars, blooms, billets and Killed steel</td><td>Heat treatment as per starting material specifications</td><td>CS – Normalised
AS – Normalised & Tempered
SS – Solution Annealed</td></tr>
<tr><td>1)Tube & Pipe, forged pipe/hollow</td><td>NDE – UTd</td><td>Shall be done as per - ASTM E213 with longitudinal notch of 5% wall thickness with min. 0.3 mm and max.1.5 mm. Actual measured notch depth to be specified in Test Certificate.</td></tr>
<tr><td>2)Forged blank (For end covers)</td><td>NDE – UTd</td><td>For size above 40 mm
UT shall be done as per - ASTM A388
In acceptance to - ASME Sec.VIII Div.2 Cl.3.3.4</td></tr>
<tr><td>3) Plate</td><td>NDE – UTd</td><td>For size above 10mm
SA 578, Acceptance Level - B</td></tr>
<tr><td>After forging (cold/hot forging)</td><td>Heat treatment</td><td>Shall be done as per SA105/SA182.
When Heat Treatment is required it shall be done as per the below table values:
<table>
<tr><th rowspan="2">Material</th><th colspan="2">Heat Treatment Temp,C</th><th colspan="2">Soaking time, hr/in</th></tr>
<tr><th>Normalising</th><th>Tempering</th><th>Normalising</th><th>Tempering</th></tr>
<tr><td>CS- SA105</td><td>870-900</td><td>-</td><td>1/2</td><td>-</td></tr>
<tr><td>AS- SA182 F11 & F12</td><td>920-950</td><td>655+- 15</td><td>1/2</td><td>1</td></tr>
<tr><td>AS- SA182 F5 & F22</td><td>920-950</td><td>695+- 15</td><td>1/2</td><td>1</td></tr>
<tr><td>AS- SA182 F91 & F92</td><td>1040-1080</td><td>750-780</td><td>1/2</td><td>1</td></tr>
</table>
Stainless Steel: All grades - Solution Annealed: 1050-1100 Deg C Soaking time: ½ hr per inch with minimum 15 minutes.
Note
1.Normalising shall be done for a minimum time of 30 min while tempering to be done for a minimum time of 60 min for all above materials except SS.</td></tr>
<tr><td rowspan="4">Finished fitting</td><td>NDE – UT[d]
For OD > or = 219mm</td><td>UT shall be done as per - ASTM A388
In Acceptance to - ASME Sec.VIII Div.2 Cl.3.3.4</td></tr>
<tr><td>NDE (for all sizes)</td><td>• MT-(100%) Shall be done as per ASTM E709.
No linear indications are acceptable.
For F91 & F92 Wet MPI shall be done.
• LPI – SS: Shall be done as per ASTM E165. No linear indications are acceptable.
• SS: Finished fittings shall be checked for radioactive contamination and reported. Survey meter shall be used to measure at 5cm near the surface. Acceptance limits: Shall be less than 0.1 milli Rontgen (MR) per hr or 1 micro Sievert per hr.</td></tr>
<tr><td>Hardness</td><td>SA105 – 137 HBW to 187 HBW.
F5 – 143-217 HBW; F9 – 179-217 HBW max.
F11, F12 – 143 HBW to 207 HBW, F22 – 156-207 HBW max.
F91 - 195 HBW to 248 HBW – 100% to be checked
SA182 F92 – 191- 269 HBW max. – 100% to be checked.</td></tr>
<tr><td>Dimension</td><td>ASME B16.5 & ASME B16.11, As per engineering drawing.</td></tr>
</table>

	Bend Test (for IBR items)	Specimen: 19mm. Thickness (t) x 25.4mm width - cold bent 180 deg. over thin section without fracture, mandrel radius: CS :<=6.35 mm. AS, SS : <=1.5 times specimen thick.

General requirements:

a. Product analysis as per S50 of ASTM A960 is required.
b. Carbon < or = 0.25% for WPB (all thickness), WPC and SA105 (thickness < or = 20mm)
c. Carbon < or = 0.30% for WPC and SA105 (thickness > 20mm)
d. If UT not done on the starting material, the same shall be done by the fitting manufacturers before forming / fabrication.
e. Mechanical Testing including hardness testing: Quantum of testing as per IBR (except for hardness testing of Gr 91 & 92) – Test samples shall be tested in the Heat treatment of fitting delivered condition. For Gr 91 & 92 fittings, hardness testing shall be done on 100% of fittings being supplied (either on ends or surface).
f. Pipe made from plate as a starting material and long seam welded should not be used.
g. All raw materials used in steel making including incoming scrap shall be checked by supplier to ensure freedom from radioactivity (applicable for SS material only).
h. Design proof test as per ASME B16.9 should be carried out for the geometric shape and size ordered if already not done.

3.0 Creep testing shall be carried out as per SIP:RM:01 (latest revision) whenever indicated in the Enquiry/Purchase Order/Engineering Drawing.

4.0 REPAIRS AND FINISH:

The products shall be free from injurious defects like crack,seam etc. with workman like finish. Repairs involving fusion welding is prohibited. Surface defects can be removed by mechanical means and the defective areas shall be merged with adjacent surface. Minimum thickness after repair shall meet the drawing / specification requirements. Flatness on curved surfaces of fittings shall be limited to 6% of nominal OD. Thickness : Outer Diameter and Transition : Variation shall be merged smooth to min 1:4 taper.

5.0 MARKING, PRESERVATION AND PACKING:

The following details to be neccessarily hot stamped 1. Heat number, 2. Inspecting Authority Seal 3. Specification Grade, code case (if applicable) and Size, 4. Company Seal and "B16"(for ANSI fittings).
The rest to be marked as per Specification.
Adittionally The following to be painted :
for OD > 108mm : PO No., Sl. No., Specification ,"BHEL-Tiruchirappalli", Drawing.No. & Weight
for OD <= 108mm : Sl. No., Specification
CS & AS fittings to be rust preventive coated after shot blasting inside & out side & packed to avoid damage.
SS fittings to be surface treated (Pickling, Passivation) as per ASTM A380 both inside and outside.

6.0 INSPECTION AND CERTIFICATION:

a. Products must be inspected at works and the test certificates must be countersigned by the Inspecting Authority as indicated below:

Imported items: Inspecting Authority approved by IBR for the country of origin with Form III-C (for all fittings except dished ends), Form III-I (for dished ends) as per IBR and additonal MTC as given below.

Indigenously supplied IBR items: Director of Boilers/Chief Inspector of Boilers/Inspecting Authority approved by IBR, for the respective state in India with Form III-C (for all fittings except dished ends), Form III-I (for dished ends) as per IBR and additonal MTC as given below.

Separate Manufacturer's Test certificate (MTC) in English language with following details, shall accompany all products:

1. Purchase Order No.(BHEL),TDC No. & Test certificate number
2. Specification, Grade with applicable year of code & code case (if applicable), Heat Number, Drawing No.,Quantity & Size
3. Supplier of the steel used in making the finished product
4. Forming process, Chemistry including incidental elements - Heat wise.
5. Heat treatment details: temperature, soaking time, cooling medium (for quenching).
6. Mechanical test results, Hardness, NDE test results with reference & acceptance standard.

7. Detailed NDE reports for MT, LPI and UT shall be submitted along with MTC.
8. Photomicrograph at 400X magnification for F91, WP91, F92 & WP92 in final Heat treated condition of fittings.
9. PMI certification for all Alloy steels fittings.
10. Print of the stamp of Inspecting Authority, which is used in the fitting.
11. Dimensional reports for each product
12. Repair details if any.
13. Certified copy of TC for starting material.
14. Guarantee certificate for retainability of hydrostatic test pressure corresponding to that of matching pipe of equivalent material or Hydro static test report as applicable.
15. ***Creep test report as per SIP:RM:01 (latest revision) whenever indicated in the Enquiry/Purchase Order/Engineering Drawing.***

1. For CE-marking items the TCs with details specified above shall be submitted as per EN-10204 (latest) For pressure parts test certificates of type 3.1 or 3.2 is acceptable.

Type 3.1 – Suppliers shall have ISO 9001-2008/2015 (with validity as applicable) certification certified by Notified Body recognized by European community and test certificate certified by suppliers authorized inspection representative.

Type 3.2 – Components inspected and test certificates certified by both the supplier's authorized inspection representative and Notified Body recognized by European community.

2. For non pressure parts test certificates of type 2.2 is acceptable.
   Type 2.2 – suppliers test certificates signed by suppliers authorized inspection representative with test results as required by this TDC.

b. For SS: Measured Radioactivity levels at 5cm from the surface of the fitting shall be reported in the Mill Test Certificate (not to be recorded in IBR Form).

21.11.2017	21/11/17	21/11/17	21/11/17	21.11.17	21/11/17
Abdur Rahman	G. Panneer Selvam	M. Nadanakumar	R. Dharmar	N. Kirubakaran	Amit Roy
Sr.Engineer/QA	DGM/QA	AGM/MM	AGM/QC	SDGM/PE/FB	AGM/QA&BE
Prepared By	**Reviewed By**				**Approved By**

FORGE SHOP

1.00.00 Name of Company, Address

2.00.00 Type & No. of Forging Press : Forging hammer

Capacity - (Tonnes)

3.00.00 Max. size of Material that can be handled dimensions, weight and type of materials.

4.00.00 Production with relevant standards (for last three years)

Carbon Steel

Stainless Steel

Alloy steel

Inconel –

5.00.00 Heating Facilities -

5.10.00 Furnace - No. and capacity

5.10.10 Type - Oil Fired, Gas Fired, Electric heating

5.10.20 Dimensions

5.10.30 Mode of Temperature control & extent of automation.

5.10.40 Temperature recording facilities

5.20.00 Distance of heating furnace from Forging Press

5.30.00 Handling Facilities - Crane/Truck/Manual/ any other indicate list of such facility.

6.00.00 Availability of in-house Heat Treatment facility Yes/No

6.10.00 If yes: Type of heat treatment possible

FORGE SHOP

6.20.00 If no, source of Heat Treatment with relevant details.

6.20.10 Annealing -

6.20.20 Normalising -

6.20.30 Stress Relieving -

6.20.40 Quenching: - Water/Oil

Any other Heat treatment? -

6.20.50 Type & No. of Furnace -

6.20.60 Dimensions, Type of Temp. Control,
Temp - Time Recording facilities.

7.00.00 Source of Raw Materials -

Indigenous/imported (Indicate source and quantity of material procured during last three years)

8.00.00 Machining Facilities -

List of machines installed

9.00.00 Cutting facilities - Type & No. of Machine

10.00.00 Availability of testing facilities Yes/No

10.10.00 If no - Indicate source of testing with relevant details

10.20.00 If yes :-

10.20.10 Chemical Analysis: Method

10.20.20 Mech. Testing

10.20.21 Hardness testing

10.20.22 Metallorgraphy

10.20.23 Universal Tensile Testing M/C -
Ambient Low Temp.

10.20.24 Any other tests –

10.30.00 Non-destructive

10.30.10 Radiography

VTCTR03

FORGE SHOP

10.30.20 Ultrasonic Test

10.30.30 Dye Penetration

10.30.40 MPI

10.30.50 Any other NDE

11.00.00 Experience with Third Party/Statutory Agency:

Indicate the agency

12.00.00 Source of procurement of Dies & availability for Machining of such dies.

13.00.00 Consistency in supply:

13.10.00 Has the vendor produced items of similar nature in past?

13.20.00 Has the vendor maintained delivery commitments in past?

13.30.00 Has there been frequent labor trouble in past?

13.40.00 Has there been major upset due to faulty material management?

13.50.00 Is the system of planning & scheduling resilient enough to overcome temporary setbacks & make up lost time?

13.60.00 Has the vendor got standby arrangement for power?

13.70.00 Can the vendor quickly offload the work to other reliable sub-vendor?

13.80.00 Total order booked till date.

14.00.00 Remarks:

PLACE: SIGNATURE WITH SEAL

DATE:

In line with Government Public Procurement Order No. P-45021/2/2017-BE-II dt. 15.06.2017 & P-45021/2/2017-PP (BE-II) dated 28.05.2018, we hereby certify that we

……

(supplier name) are local supplier meeting requirement of minimum local content (50%) defined in as above orders for the material against Enquiry No.

……

Details of location at which local value addition will be made is as follows:

……

……

……

We also understand, false declarations will be in breach of the Code of Integrity under Rule 175(1)(i)(h) of the General Financial Rules for which a bidder or its successors can be debarred for up to two years as per Rule 151 (iii) of the General Financial Rules along with such other actions as may be permissible under law.

Seal and Signature of Supplier

BHARAT HEAVY ELECTRICALS LIMITED
TIRUCHIRAPALLI 620 014
MATERIALS MANAGEMENT

Ref: MM:Genl dt : 20.03.2019

Sub: Revised payment terms for Purchase tenders.
Ref : Note ref MM/TENDER/PT/01 dt 16.03.2019

Based on the approval dt 16.03.2019 obtained from competent authority, the applicable payment terms for Purchase tenders is revised with effect from 20.03.2019. The applicable payment terms are given in the annexure.

1. The Revised payment terms is applicable for procurement of materials (Tubes, Pipes, C&F, Steel, PSS and BOI Items). All fresh tenders can be operated with revised payment terms for both imported and indigenous procurement.

2. This revised payment terms is also applicable for tenders that are yet to be opened. Necessary corrigendum may be issued to effect the revised payment terms.

This comes into force with immediate effect.

20/3/19

General Manager/MM & WCM

ANNEXURE-2

Indigenous (Non-MSE):

If the materials are receivable at BHEL Stores, Trichy:

BHEL Payment term is 100% direct EFT payment after 60 days from the date of receipt and acceptance of materials (45 days for Fuel category items viz., Bulk LPG, Liquid Oxygen, Liquid Argon, Liquid Nitrogen, LPG in cylinders and all gases in cylinders such as Argon, Acetylene, Nitrogen, Hydrogen, Helium, Carbon di Oxide)

Payment term is 100% direct EFT payment after 60 days from the date of receipt and acceptance of materials and against 10% PBG valid for the warranty period, wherever necessary.

If the materials are receivable at Site (wherever necessary):

Payment term is 100% direct payment after 60 days from the date of dispatch against site acknowledgement

Payment term is 100% direct payment after 60 days from the date of dispatch against site acknowledgement and against 10% PBG valid for the warranty period.

Imports:

BHEL Payment term is 100% payment on CAD basis after 60 days from the date of receipt of documents, specified in PO, at BHEL bank. Respective bank charges to respective account.

If supplier insists for LC, only Usance LC with 60 days credit will be opened one month prior to material readiness, further loading @ 1.5% on the offered value will be considered. If Hence supplier shall intimate the material readiness accordingly for opening of L.C. LC validity period will be 90 days and for any extension, applicable charges will be to supplier's account.

New Suppliers

For new suppliers not registered with BHEL, Trichy for the product, Payment shall be made 60 days after receipt and acceptance of materials.

In case of foreign supplier, first lot of mutually agreed quantity shall be supplied with payment as CAD basis after 60 days from the date of receipt & acceptance of material. If insisted for LC, after acceptance of first lot, only Usance LC with 60 days credit will be opened one month prior to material readiness.

Payment for MSE Indigenous vendors will be as per MSMED Act, 2006.- This note is to be added in the tender condition where benefits to MSE are mentioned and not in the payment Terms clause.

16/03/19	16/03/19	16/3/19	18/3/19
AGM/MM/RM&Steel	**GM/MM&WCM**	**GM/FINANCE**	**EXECUTIVE DIRECTOR**

BHARAT HEAVY ELECTRICALS LIMITED
MATERIALS MANAGEMENT

Ref: MM /PUR/RM **Date: 13.08.2018**

NOTE

Sub: PROPOSAL FOR MODIFICATION OF LIQUIDATED DAMAGES (LD) CLAUSE IN RM TENDERS

1.0 PRESENT LD CLAUSE : Currently, the LD clause for Tenders, operated by RM/MM/Pipes, Tubes and C&F, BHEL Trichy for delay in supplies (based on the approval Ref.: MM/RM/LD TERMS /01 dtd. 21.05.2018), is as follows:

A. Tenders with restricted delivery:

1) For single Delivery schedule: 1.0% of the total order value per week or part thereof subject to a maximum of 15% of the total order value.

2) For staggered Delivery Schedule: 1.0% of the undelivered portion per week of the delay or part thereof subject to a maximum of 15% of the total order value.

B. Tenders with Open/ without restricted delivery:

1) For single Delivery schedule: 0.5% of the total order value per week or part thereof subject to a maximum of 10% of the total order value.

2) For staggered Delivery Schedule: 0.5% of the undelivered portion per week of the delay or part thereof subject to a maximum of 10% of the total order value.

2.0 RESPONSE TO THE CURRENT LD CLAUSE:

Of late, it is observed that the response to the above clause by the vendors is not encouraging, as it calls for levying of LD on the total order value. Because it levies LD on the total P.O., it results in getting fewer offers, which leads to increase in prices or unhealthy competition.

Whereas the procurement of certain package items / Equipment requires complete quantity/items for further processing and not in parts, the procurement process of raw Materials, partial /full quantity against a P.O Sl.No. when supplied by suppliers, is progressively taken up for further processing for Shop Production.

3.0 PROPOSAL: Based on the above and considering the project/ production requirement, the following are proposed for single delivery cases, in line with the staggered delivery cases for Raw Material Tenders (Tubes, Pipes, C&F) including Steels, as applicable:

1. Tenders with restricted delivery:

Liquidated Damages: Penalty will be levied @ 1.0 % of the undelivered portion per week of delay or part thereof subject to a maximum of 15% of the total order value.

2. Tenders with Open/ without restricted delivery:
Liquidated Damages: Penalty will be levied @ 0.5% of the undelivered portion per week of delay or part thereof subject to a maximum of 10% of the total order value.

GM/MM may please recommend and Executive Director may please accord administrative approval for the above proposal.

13.08.18
DGM/Purchase/Tubes & Pipes
(S.Karunanidhy)

AGM/MM/RM
(M. Nadanakumar) 13/08/18

AGM/MM/BOI&Steel
(P.S.Ganesh) 13/08/2018

GM/MM
(D.Asokan) 13/8/18

Executive Director
(R.Rajamanohar) 13/8/18

BHARAT HEAVY ELECTRICALS LIMITED
PURCHASE REQUISITION (PR) - FOSSIL BOILERS

Pur. Grp : 140 PR TYPE : NB Pur. Grp. Desc : FB Casting&Forging
Header Text :
Supply of fittings as per drawing, specification <(>&<)> TDC 423/09.
Inspection by IBR.

PR No/Sl PR Date	Matl Code WBS/SO/IO	UOM Qty SO Itm	Mat.Grp	PP/ PP	DelyDt Wt.kg Rate/ Curr	Val. Catg. PPO_DT
Project Name						
Description				Storg. Loc.	Old Material No.	
126323566 /10	921041980000	NO 4.00			311220 2136	E
18.06.20	U6/1731		CFFGF 7700004733		2373.00 USD	040719
1x660MW Sagardighi Extension TPP						
90° BW SR ELBOW 457X80(N) SA234WP12CL1				21		
90° BW SR ELBOW 457X80(N) SA234WP12CL1						
3-12-852-12079						
126323566 /20	921041990000	NO 4.00			311220 1068	C
18.06.20	U6/1731		CFFGF 7700004733		1405.60 USD	040719
1x660MW Sagardighi Extension TPP						
45° BW SR ELBOW 457X80(N) SA234WP12CL1				21		
45° BW SR ELBOW 457X80(N) SA234WP12CL1						
3-12-852-12080						
126323566 /30	921043520000	NO 4.00			311220 1482	C
18.06.20	U6/1731		CFFGF 7100158957		90000.00 INR	040918
1x660MW Sagardighi Extension TPP						
ELBOW 90 DEG SR D 406.4X70 (N) SA234WPC				21		
ELBOW 90 DEG SR D 406.4X70 (N) SA234WPC						
3-05-000-01179						
126323566 /40	921043530000	NO 2.00			311220 1325	C
18.06.20	U6/1731		CFFGF 7700004591		3343.72 USD	040918
1x660MW Sagardighi Extension TPP						
ELBOW 90 SR DEG 457.2X107(N)SA234WP12CL1				21		
ELBOW 90 SR DEG 457.2X107(N)SA234WP12CL1						
3-10-000-08597						
126323566 /50	921043860000	NO 2.00			311220 366	A
18.06.20	U6/1731		CFFGF 7100158957		95000.00 INR	040918
1x660MW Sagardighi Extension TPP						
ELBOW 45 DEG LR D355.6X60(N)SA234WP12CL1				21		
ELBOW 45 DEG LR D355.6X60(N)SA234WP12CL1						
3-07-000-14106						
126323566 /60	921043880000	NO 16.00			311220 4189	F

Test Certificate : Guarantee Certificate : Third Party Inspection :

Reqd/Not Reqd Reqd/Not Reqd Reqd/Not Reqd

Indentors Name Designation Department Signature With Seal

PRAKASH TANTUWAY Digitally signed by PRAKASH TANTUWAY Date: 2020.06.18 16:14:13 +05'30'

Pur. Grp : 140 PR TYPE : NB Pur. Grp. Desc : FB Casting&Forging
Header Text :
Supply of fittings as per drawing, specification <(>&<)> TDC 423/09.
Inspection by IBR.

PR No/Sl Matl Code UOM Qty DelyDt Wt.kg Val. Catg.
PR Date WBS/SO/IO SO Itm Mat.Grp PP/ PP Rate/ Curr PPO_DT
Project Name
Description Storg. Loc. Old Material No.

18.06.20 U6/1731 CFFGF 7700004733 1204.80 USD 040719
1x660MW Sagardighi Extension TPP
EL 90 DEG 323.9 X 55(N)SA234WP12CL1 R457 21
EL 90 DEG 323.9 X 55(N)SA234WP12CL1 R457
3-07-000-14105

126323566 /70 921043980000 NO 21.00 311220 14175 G
18.06.20 U6/1731 CFFGF 7100158957 123000.00 INR 040918
1x660MW Sagardighi Extension TPP
90° BW LR ELBOW 457.2X65 SA234WPC 21
90° BW LR ELBOW 457.2X65 SA234WPC
3-24-809-04325

126323566 /80 921044180000 NO 14.00 311220 9484 F
18.06.20 U6/1731 CFFGF 000000
1x660MW Sagardighi Extension TPP
BW LR ELBOW 90DEG D457.2X65(N) SA234WPC 21
BW LR ELBOW 90DEG D457.2X65(N) SA234WPC
3-19-850-06782

126323566 /90 921044190000 NO 3.00 311220 3769 E
18.06.20 U6/1731 CFFGF 7100168477 298095.00 INR 040719
1x660MW Sagardighi Extension TPP
BW LR ELBOW 90DEG D558.8X81(N) SA234WPC 21
BW LR ELBOW 90DEG D558.8X81(N) SA234WPC
3-19-000-06781

126323566 /100 921044390000 NO 4.00 311220 1405 B
18.06.20 U6/1731 CFFGF 000000
1x660MW Sagardighi Extension TPP
EL 45DEG LR D457.2X65(NOM)SA234WPC 21
EL 45DEG LR D457.2X65(NOM)SA234WPC
3-19-000-07170

126323566 /110 921044400000 NO 12.00 311220 2462 D
18.06.20 U6/1731 CFFGF 000000

Test Certificate : Guarantee Certificate : Third Party Inspection :

Reqd/Not Reqd Reqd/Not Reqd Reqd/Not Reqd

Indentors Name Designation Department Signature With Seal

PRAKASH TANTUWAY Digitally signed by PRAKASH TANTUWAY Date: 2020.06.18 16:14:32 +05'30'

Pur. Grp : 140 PR TYPE : NB Pur. Grp. Desc : FB Casting&Forging
Header Text :
Supply of fittings as per drawing, specification <(>&<)> TDC 423/09.
Inspection by IBR.

PR No/Sl Matl Code UOM Qty DelyDt Wt.kg Val. Catg.
PR Date WBS/SO/IO SO Itm Mat.Grp PP/ PP Rate/ Curr PPO_DT
Project Name
Description Storg. Loc. Old Material No.

1x660MW Sagardighi Extension TPP
EL 90DEG SR D323.9X60(NOM) SA234WP12CL1 21
EL 90DEG SR D323.9X60(NOM) SA234WP12CL1
3-12-000-15466

126323566 /120 921047460000 NO 10.00 311220 2210 C
18.06.20 U6/1731 CFFGF 7100125933 27205.00 INR 050515
1x660MW Sagardighi Extension TPP
90° BW LR ELBOW 323.9X45 SA234WPC 21
90° BW LR ELBOW 323.9X45 SA234WPC
4-24-000-08437

126323566 /130 921051300000 NO 8.00 311220 2296 F
18.06.20 U6/1731 CFFGF 7700004590 2016.67 USD 040918
1x660MW Sagardighi Extension TPP
UEQTEE 323.9X80(N)/273X50(N)SA234WP12CL1 21
UEQTEE 323.9X80(N)/273X50(N)SA234WP12CL1
3-10-000-08585

126323566 /140 921051480000 NO 2.00 311220 1150 C
18.06.20 U6/1731 CFFGF 7100168477 190125.00 INR 040719
1x660MW Sagardighi Extension TPP
BW EQUAL TEE D457.2X65 SA234WPC 21
BW EQUAL TEE D457.2X65 SA234WPC
3-24-805-04327

126323566 /150 921051710000 NO 1.00 311220 1735 E
18.06.20 U6/1731 CFFGF 7700004733 10039.70 USD 040719
1x660MW Sagardighi Extension TPP
UNEQ TEE D558.8X81/457.2X65(N) SA234WPC 21
UNEQ TEE D558.8X81/457.2X65(N) SA234WPC
3-19-000-06783

126323566 /160 921051900000 NO 2.00 311220 1761 E
18.06.20 U6/1731 CFFGF 000000
1x660MW Sagardighi Extension TPP

Test Certificate : Guarantee Certificate : Third Party Inspection :

Reqd/Not Reqd Reqd/Not Reqd Reqd/Not Reqd

Indentors Name Designation Department Signature With Seal

PRAKASH TANTUWAY Digitally signed by PRAKASH TANTUWAY Date: 2020.06.18 16:14:52 +05'30'

Pur. Grp : 140 PR TYPE : NB Pur. Grp. Desc : FB Casting&Forging
Header Text :
Supply of fittings as per drawing, specification <(>&<)> TDC 423/09.
Inspection by IBR.

PR No/Sl PR Date	Matl Code WBS/SO/IO	UOM Qty SO Itm	DelyDt Wt.kg Mat.Grp	Val. Catg. PP/ PP Rate/ Curr	PPO_DT Project Name Description	Storg. Loc.	Old Material No.
	UNEQ TEE 457X65(N)/406.4X70(N) SA234WPC		21				
	UNEQ TEE 457X65(N)/406.4X70(N) SA234WPC						
	3-05-000-01221						
126323566 /170	921051910000	NO 2.00		311220 1946	E		
18.06.20	U6/1731		CFFGF		000000		
	1x660MW Sagardighi Extension TPP						
	BW UNEQ TEE 457X80/406.4X80 SA234WP12CL1		21				
	BW UNEQ TEE 457X80/406.4X80 SA234WP12CL1						
	3-12-000-15470						
126323566 /180	921051980000	NO 2.00		311220 2173	E		
18.06.20	U6/1731		CFFGF		000000		
	1x660MW Sagardighi Extension TPP						
	UNEQ T 457.2X107/406.4X93.4 SA234WP12CL1		21				
	UNEQ T 457.2X107/406.4X93.4 SA234WP12CL1						
	3-12-000-15473						
126323566 /190	921051990000	NO 1.00		311220 703	E		
18.06.20	U6/1731		CFFGF		000000		
	1x660MW Sagardighi Extension TPP						
	EQ T 406.4X93.4/406.4X80.7 SA234WP12CL1		21				
	EQ T 406.4X93.4/406.4X80.7 SA234WP12CL1						
	3-12-000-15474						
126323566 /200	921052020000	NO 2.00		311220 1208	D		
18.06.20	U6/1731		CFFGF		000000		
	1x660MW Sagardighi Extension TPP						
	EQ T 406.4X107.14/406.4X70 SA234WP12CL1		21				
	EQ T 406.4X107.14/406.4X70 SA234WP12CL1						
	3-10-000-09009						
126323566 /210	921052050000	NO 2.00		311220 7042	G		
18.06.20	U6/1731		CFFGF		000000		
	1x660MW Sagardighi Extension TPP						
	BW EQUAL TEE D660X105(NOM) SA234WPC		21				

Test Certificate : Guarantee Certificate : Third Party Inspection :

Reqd/Not Reqd Reqd/Not Reqd Reqd/Not Reqd

Indentors Name Designation Department Signature With Seal

PRAKASH TANTUWAY Digitally signed by PRAKASH TANTUWAY Date: 2020.06.18 16:15:08 +05'30'

Pur. Grp : 140 PR TYPE : NB Pur. Grp. Desc : FB Casting&Forging
Header Text :
Supply of fittings as per drawing, specification <(>&<)> TDC 423/09.
Inspection by IBR.

PR No/Sl PR Date	Matl Code WBS/SO/IO	UOM Qty SO Itm	Mat.Grp	PP/ PP	DelyDt Wt.kg Rate/ Curr	Val. Catg. PPO_DT
Project Name						
Description				Storg. Loc.	Old Material No.	
BW EQUAL TEE D660X105(NOM) SA234WPC						
3-19-000-07215						
126323566 /220	921173430000	NO 2.00			311220 651	B
18.06.20	U6/1731		CFFGF			000000
1x660MW Sagardighi Extension TPP						
RED D457X80(N)/D406.4X85(N) SA234WP22CL1				21		
RED D457X80(N)/D406.4X85(N) SA234WP22CL1						
3-10-285-09008						
126323566 /230	921173470000	NO 2.00			311220 1278	C
18.06.20	U6/1731		CFFGF			000000
1x660MW Sagardighi Extension TPP						
BW CONC RED D660X90/D457.2X65 SA234WPC				21		
BW CONC RED D660X90/D457.2X65 SA234WPC						
3-19-000-07213						
126323566 /240	921173480000	NO 2.00			311220 1150	C
18.06.20	U6/1731		CFFGF			000000
1x660MW Sagardighi Extension TPP						
BW ECC RED D660X90/D457.2X65 SA234WPC				21		
BW ECC RED D660X90/D457.2X65 SA234WPC						
3-19-000-07214						

Total wt = 67,169.14 Total value Catg = N

PRAKASH TANTUWAY Digitally signed by PRAKASH TANTUWAY Date: 2020.06.18 16:15:26 +05'30'

NADANA KUMAR M Digitally signed by NADANAKUMAR M Date: 2020.06.19 11:42:40 +05'30'

Test Certificate : Guarantee Certificate : Third Party Inspection :

Reqd/Not Reqd Reqd/Not Reqd Reqd/Not Reqd

Indentors Name Designation Department Signature With Seal

Approved Vendors In Product Material Directory

SAP Username: FBCFPUR2
IP Address: 10.1.156.224-T0020831
Date: 01.10.2020
Time: 11:51:39
Material Group: CFFGF
Material group desc: FORMED PRODUCTS:FITT
VPR Product group: TPFB

Sl. No.	Vendor Code Vendor Name Size Detail MSME Indicator/Certification Date Relative to BHEL Employee Ex BHEL Employee	TrialOrder Allowed	Trial Order Actuals	City Country	T/P	AGENT	Main Vendor	VPR	INAC	SC/ST	NTPC
1	11077 DEE DEVELOPMENT ENGINEERS LTD., TEES UPTO OD 914 MM,THK 98 MM, ELBOWS UPTO OD 813 MM, REDUCERS UPTO OD 965 MM & THK UPTO 108 MM	3	0	HARYANA India	P	Manufacturer(M)	X	A			
2	12144 FLASH FORGE PVT LTD., UPTO 1100 MM MED/	3	0	VISAKAPATNAM India	P	Manufacturer(M)	X	B			Z
3	14373 K. S. PIPE FITTINGS PVT.LTD CS & AS UPTO GR.22 TEES & REDUCERS:OD-711MM, THK-82MM; ELBOWS: OD-660.4MM, THK-82MM SMA/01.08.2019	3	0	DIST-PALWAL, India	P	Manufacturer(M)	X	A			Z
4	20032 IGAWARA INDL SERVICE & TRADING PTE UPTO 1200 MM	3	0	SINGAPORE Singapore	P	Foreign Agent(F)	X	A			Z
5	20328 IBF S.P.A. FULL RANGE	3	0	20010 VITTUONE (MI) Italy	P	Manufacturer(M)	X	A			Z

T/P : **T** = TRIAL, **P** = Permanent
AG(Agent) : **A** = Agent, **M** = Manufacturer, **S** = Sales Office, **T** = Trader
Main vendor : **X** = Main vendor
VPR : **C,D** = Highest of (PY and CY PO GRs) and Last 3 PO GRs if C or D
INAC : **Y** = Vendor not quoted last 4 consecutive enq or last 2 years
NTPC : **Z** = NTPC Approved vendor (please confirm with QA for correctness of this indicator)

Approved Vendors In Product Material Directory

SAP Username: FBCFPUR2
IP Address: 10.1.156.224-T0020831
Date: 01.10.2020
Time: 11:51:39
Material Group: CFFGF
Material group desc: FORMED PRODUCTS:FITT
VPR Product group: TPFB

Sl. No.	Vendor Code Vendor Name Size Detail MSME Indicator/Certification Date Relative to BHEL Employee Ex BHEL Employee	TrialOrder Allowed	Trial Order Actuals	City Country	T/P	AGENT	Main Vendor	VPR	INAC	SC/ST	NTPC
6	20426 PETROL RACCORD SPA UPTO 48 INCH	3	0	ITALY Italy	P	Manufacturer(M)	X	A			Z
7	20726 ALLIED INTERNATIONAL SRL, FULL RANGE	3	0	ITALY Italy	P	Manufacturer(M)	X				Z
8	23430 LONGSHAN PIPE SOLUTIONS CO. LTD ALL RANGE	3	0	CHINA China	P	Manufacturer(M)	X				
9	23540 SHANGHAI CHANGQIANG INDUSTRIAL (CS,AS UPTO GRADE 22),ELBOW UPTO OD/THK: 889 MM/152.4 MM; TEES UPTO OD/THK: 1110 MM/152.4 MM; REDUCER UPTO OD/THK: 965 MM/152.4 MM	3	0	SHANGHAI. China	P	Manufacturer(M)	X	A			

T/P : **T** = TRIAL, **P** = Permanent
AG(Agent) : **A** = Agent, **M** = Manufacturer, **S** = Sales Office, **T** = Trader
Main vendor : **X** = Main vendor
VPR : **C,D** = Highest of (PY and CY PO GRs) and Last 3 PO GRs if C or D
INAC : **Y** = Vendor not quoted last 4 consecutive enq or last 2 years
NTPC : **Z** = NTPC Approved vendor (please confirm with QA for correctness of this indicator)

DRAWING NO: 3-05-000-01179

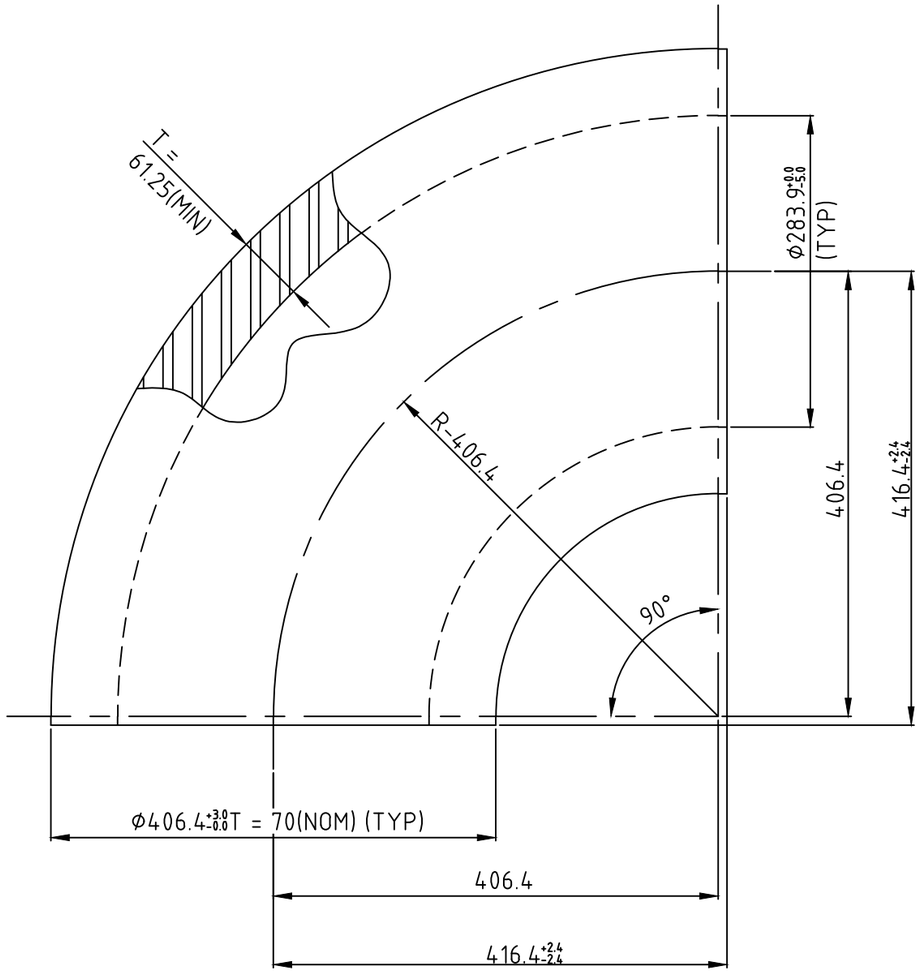

NOTES:

01. DESIGN, MANUFACTURE AND INSPECTION AS PER IBR.

02. ALL DIMENSIONS SHOWN ARE FINISHED DIMENSIONS.

03. NORMALIZING IS TO BE DONE AFTER HOT FORMING.

04. FITTING SPECIFICATION : SA234WPC

05. FORMED ELBOW SHALL BE SUPPLIED WITH PLAIN ENDS.

06. THE MAXIMUM THICKNESS SHALL NOT EXCEED (T_{nom} X 1.06) AT ANY POINT ON THE ELBOW.

07. FOR TOLERANCES REFER DRG. 4-03-000-00053.

08. FITTING MATERIAL CODE: 921043520000

VARIANT NUMBER	ITEM NUMBER	DESCRIPTION	STD	DRAWING NUMBER	ITEM NO	MATERIAL CODE	A/C/P	UNIT	UNIT WEIGHT	GS
							A		370.72	
						SA234WPC				
					VAR NO	MATERIAL SPECN		DI	QUANTITY	

REV	DATE	ALTERED : YADAV
01	29.04.20	CHD & APPD: SRIDHARAN
ZONE	NOTE-06 MODIFIED	

CAUTION: The information on this document is the property of BHARAT HEAVY ELECTRICALS LTD. It must not be used directly or indirectly in any way detrimental to the interest of the company.

TYPE OF PRODUCT
OR NAME OF
CUSTOMER/PROJECT

Bharat Heavy Electricals Ltd
UNIT: HIGH PRESSURE BOILER PLANT
TIRUCHIRAPALLI – 620014

355–055

	NAME	SIGNATURE	DATE
DRN	NNR		10-09-2018
CHD	NNR		11-09-2018
APPD	SAK		11-09-2018

DEPT	PP	ALL DIMENSIONS ARE IN MM	PROJECTION	SCALE	WEIGHT (Kg)	REF TO ASSY / OLD DWG
CODE	121			N.T.S	370.72	

TITLE ELBOW 90 DEG RAW FORMING
Φ406.4 X 70 NOM

DRAWING NO : 3-05-000-01179

REV 01

DRAWING NO: 3-05-000-01221

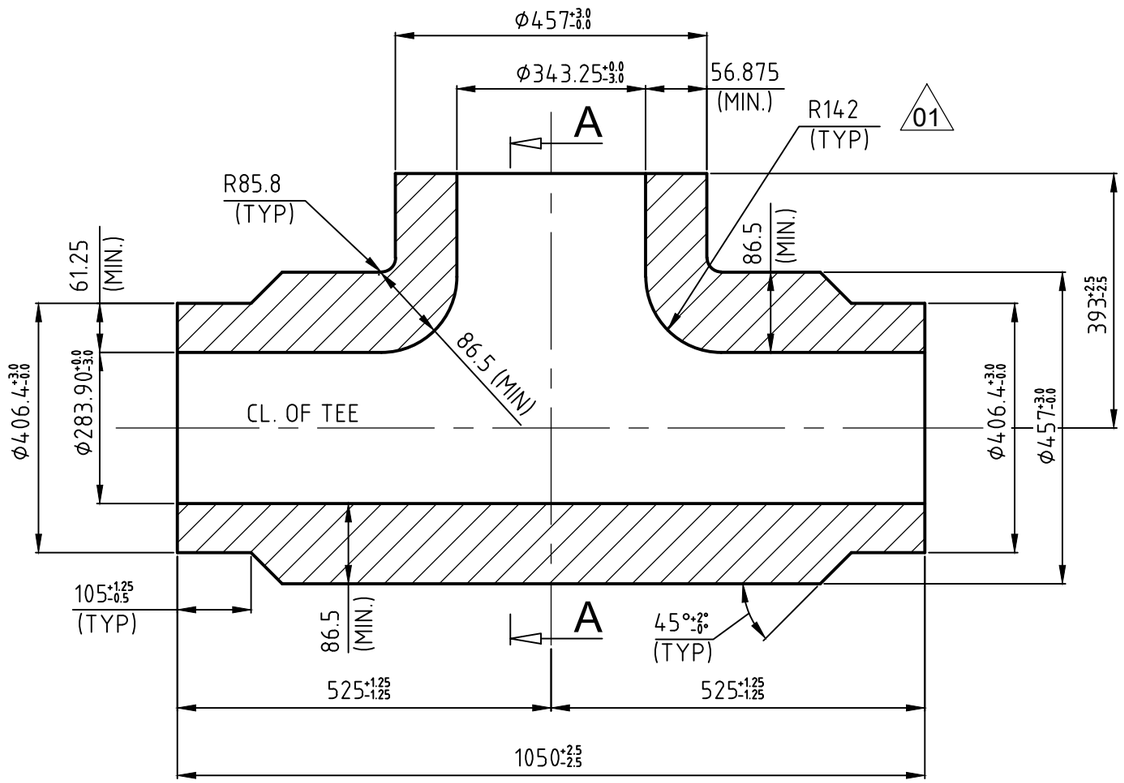

NOTES:

1. DESIGN, MANUFACTURE AND INSPECTION AS PER IBR.
2. FOR TOLERANCES REFER 4-03-000-00053.
3. ALL DIMENSIONS SHOWN ARE FINISHED DIMENSIONS.
4. NORMALIZING IS TO BE DONE AFTER HOT FORMING.
5. NO THICKNESS GREATER THAN 152.4mm SHALL BE USED WITHOUT PRIOR APPROVAL FROM BHEL.
6. FITTING SPECIFICATION: SA234WPC
7. THE FORMED TEE SHALL BE SUPPLIED WITH PLAIN ENDS.

FITTING MATERIAL CODE: 921051900000

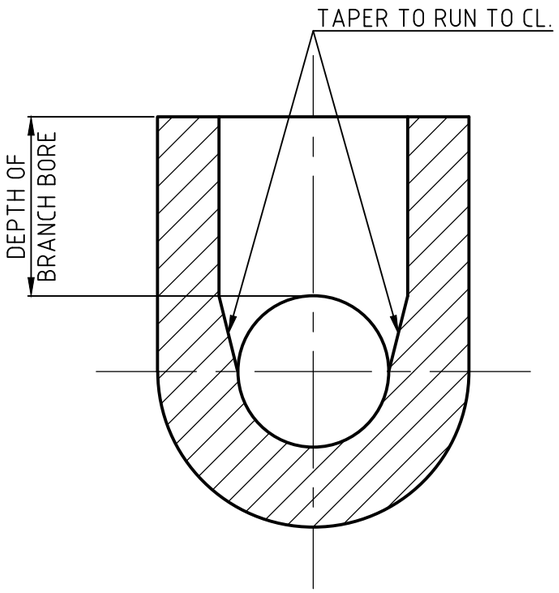

SECTION-AA

VARIANT NUMBER	ITEM NUMBER	DESCRIPTION	STD	DRAWING NUMBER			A/C/P	UNIT		GS
							A		880.500	
						SA234WPC				
					ITEM NO	MATERIAL CODE		UNIT	UNIT WEIGHT	
					VAR NO	MATERIAL SPECN		DI	QUANTITY	

TYPE OF PRODUCT
OR NAME OF
CUSTOMER/PROJECT

355-055

Bharat Heavy Electricals Ltd
UNIT: HIGH PRESSURE BOILER PLANT
TIRUCHIRAPALLI – 620014

	NAME	SIGNATURE	DATE
DRN	DT		23-09-2019
CHD	MH		23-09-2019
APPD	MH		23-09-2019

REV	DATE	ALTERED : SUDHAKAR
01	20.11.19	CHD & APPD: YADAV
ZONE	INNER RADIUS SHOWN	

CAUTION: The information on this document is the property of BHARAT HEAVY ELECTRICALS LTD. It must not be used directly or indirectly in any way detrimental to the interest of the company.

DEPT PP | CODE 121 | ALL DIMENSIONS ARE IN MM | PROJECTION | SCALE N.T.S | WEIGHT (Kg) 880.500 | REF TO ASSY / OLD DWG

TITLE **UNEQUAL TEE**

Φ457X65(NOM.)/ Φ406.4X70(NOM.)

DRAWING NO : 3-05-000-01221 | REV 01

DRAWING NO: 3-07-000-14105

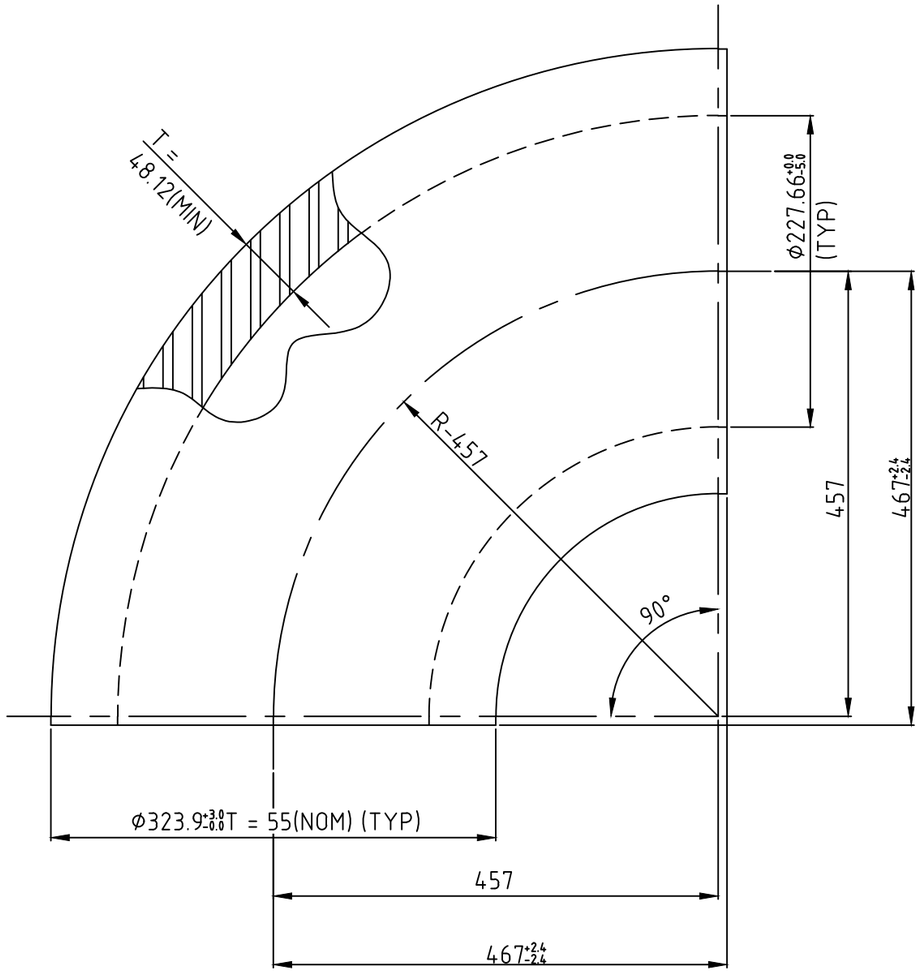

NOTES:

01. DESIGN, MANUFACTURE AND INSPECTION AS PER IBR.

02. ALL DIMENSIONS SHOWN ARE FINISHED DIMENSIONS.

03. NORMALIZING AND TEMPERING IS TO BE DONE AFTER HOT FORMING.

04. FITTING SPECIFICATION : SA234WP12CL1

05. FORMED ELBOW SHALL BE SUPPLIED WITH PLAIN ENDS.

06. THE MAXIMUM THICKNESS SHALL NOT EXCEED (T_{nom} X 1.06) AT ANY POINT ON THE ELBOW.

07. FOR TOLERANCES REFER DRG. 4-03-000-00053.

08. FITTING MATERIAL CODE: 921043880000

VARIANT NUMBER	ITEM NUMBER	DESCRIPTION	STD	DRAWING NUMBER	ITEM NO / VAR NO	MATERIAL CODE / MATERIAL SPECN	A/C/P	UNIT / DI	UNIT WEIGHT / QUANTITY	GS
						SA234WP12CL1	A		261.82	

REV	DATE	ALTERED : YADAV
01	29.04.20	CHD & APPD: SRIDHARAN
ZONE	NOTE-06 MODIFIED	

CAUTION: The information on this document is the property of BHARAT HEAVY ELECTRICALS LTD. It must not be used directly or indirectly in any way detrimental to the interest of the company.

TYPE OF PRODUCT OR NAME OF CUSTOMER/PROJECT

Bharat Heavy Electricals Ltd
UNIT: HIGH PRESSURE BOILER PLANT
TIRUCHIRAPALLI – 620014
355–055

	NAME	SIGNATURE	DATE
DRN	NNR		10-09-2018
CHD	NNR		11-09-2018
APPD	SAK		11-09-2018

DEPT	CODE	ALL DIMENSIONS ARE IN MM	PROJECTION	SCALE	WEIGHT (Kg)	REF TO ASSY / OLD DWG
PP	121			N.T.S	261.82	

TITLE ELBOW 90 DEG RAW FORMING
Φ323.9 X 55 NOM

DRAWING NO : 3-07-000-14105

REV 01

DRAWING NO: 3-07-000-14106

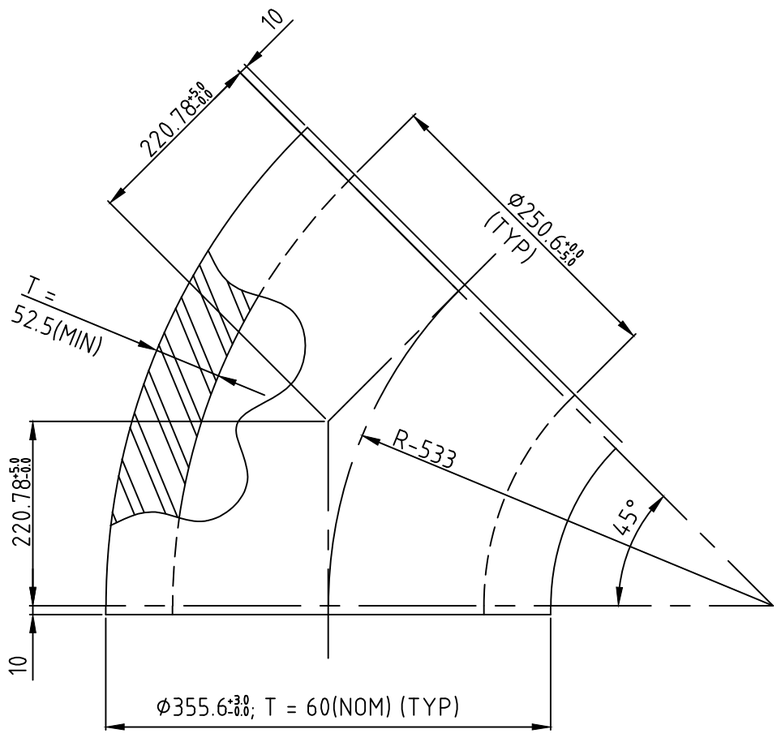

NOTES:

01. DESIGN, MANUFACTURE AND INSPECTION AS PER IBR.

02. ALL DIMENSIONS SHOWN ARE FINISHED DIMENSIONS.

03. NORMALIZING AND TEMPERING IS TO BE DONE AFTER HOT FORMING.

04. FITTING SPECIFICATION : SA234WP12CL1

05. FORMED ELBOW SHALL BE SUPPLIED WITH PLAIN ENDS.

06. THE MAXIMUM THICKNESS SHALL NOT EXCEED (T_{nom} X 1.06) AT ANY POINT ON THE ELBOW.

07. FOR TOLERANCES REFER DRG. 4-03-000-00053.

08. FITTING MATERIAL CODE: 921043860000

VARIANT NUMBER	ITEM NUMBER	DESCRIPTION	STD	DRAWING NUMBER	ITEM NO / VAR NO	MATERIAL CODE / MATERIAL SPECN	A/C/P	UNIT / DI	UNIT WEIGHT / QUANTITY	GS
						SA234WP12CL1	A		183.1	

CAUTION: The information on this document is the property of BHARAT HEAVY ELECTRICALS LTD. It must not be used directly or indirectly in any way detrimental to the interest of the company.

TYPE OF PRODUCT OR NAME OF CUSTOMER/PROJECT

355-055

Bharat Heavy Electricals Ltd
UNIT: HIGH PRESSURE BOILER PLANT
TIRUCHIRAPALLI – 620014

	NAME	SIGNATURE	DATE
DRN	NNR		10-09-2018
CHD	NNR		11-09-2018
APPD	SAK		11-09-2018

REV	DATE	ALTERED : YADAV
01	29.04.20	CHD & APPD: SRIDHARAN
ZONE	NOTE-06 MODIFIED	

DEPT PP | CODE 121 | ALL DIMENSIONS ARE IN MM | PROJECTION | SCALE N.T.S | WEIGHT (Kg) 183.1 | REF TO ASSY / OLD DWG

TITLE ELBOW 45 DEG RAW FORMING
Ø355.6 X 60 NOM

DRAWING NO : 3-07-000-14106 | REV 01

DRAWING NO: 3-10-000-08585

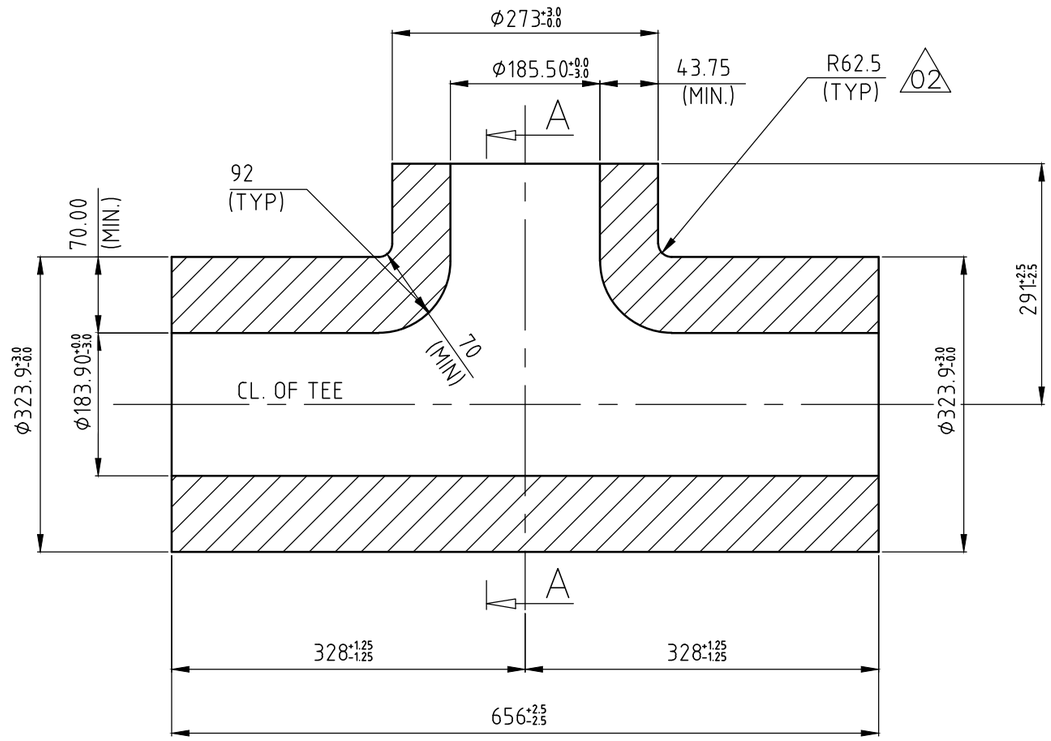

NOTES:

1. DESIGN, MANUFACTURE AND INSPECTION AS PER IBR.
2. FOR TOLERANCES REFER 4-03-000-00053.
3. ALL DIMENSIONS SHOWN ARE FINISHED DIMENSIONS.
4. NORMALIZING AND TEMPERING IS TO BE DONE AFTER HOT FORMING.
5. NO THICKNESS GREATER THAN 152.4mm SHALL BE USED WITHOUT PRIOR APPROVAL FROM BHEL.
6. FITTING SPECIFICATION: SA234WP12CL1
7. THE FORMED TEE SHALL BE SUPPLIED WITH PLAIN ENDS.

FITTING MATERIAL CODE:921051300000

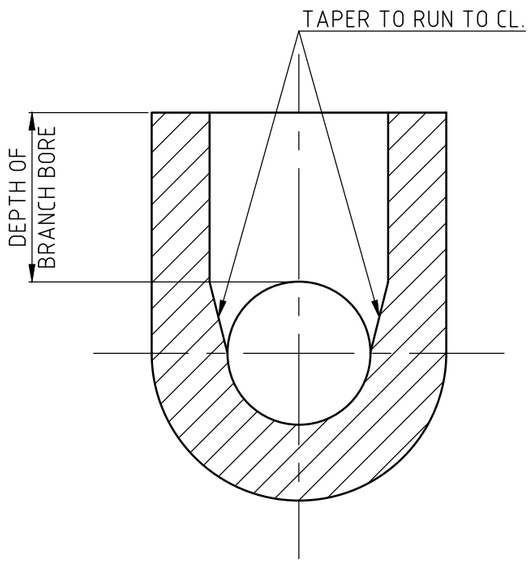

SECTION–AA

VARIANT NUMBER	ITEM NUMBER	DESCRIPTION	STD	DRAWING NUMBER	ITEM NO	MATERIAL CODE	A/C/P	UNIT	UNIT WEIGHT	GS
						SA234WP12CL1	A		287.000	
					VAR NO	MATERIAL SPECN		DI	QUANTITY	

REV	DATE	ALTERED : EK
02	20.11.19	CHD & APPD: YADAV
ZONE	RADIUS SHOWN.	
REV	DATE	ALTERED : DOMINIC
01	15.11.19	CHD & APPD: YADAV
ZONE	DESCRIPTION CHANGE IN TITLE BLOCK	

CAUTION: The information on this document is the property of BHARAT HEAVY ELECTRICALS LTD. It must not be used directly or indirectly in any way detrimental to the interest of the company.

TYPE OF PRODUCT OR NAME OF CUSTOMER/PROJECT

355–055

Bharat Heavy Electricals Ltd
UNIT: HIGH PRESSURE BOILER PLANT
TIRUCHIRAPALLI – 620014

	NAME	SIGNATURE	DATE
DRN	NNR		04-25-2018
CHD	NNR		04-25-2018
APPD	SAK		04-25-2018

DEPT	CODE	ALL DIMENSIONS ARE IN MM	PROJECTION	SCALE	WEIGHT (Kg)	REF TO ASSY / OLD DWG
PP	121			N.T.S	287.000	

TITLE UNEQUAL TEE
D323.9 X 80(NOM) / D273 X 50(NOM)
01

DRAWING NO : 3–10–000–08585
REV 02

DRAWING NO: 3-10-000-08597

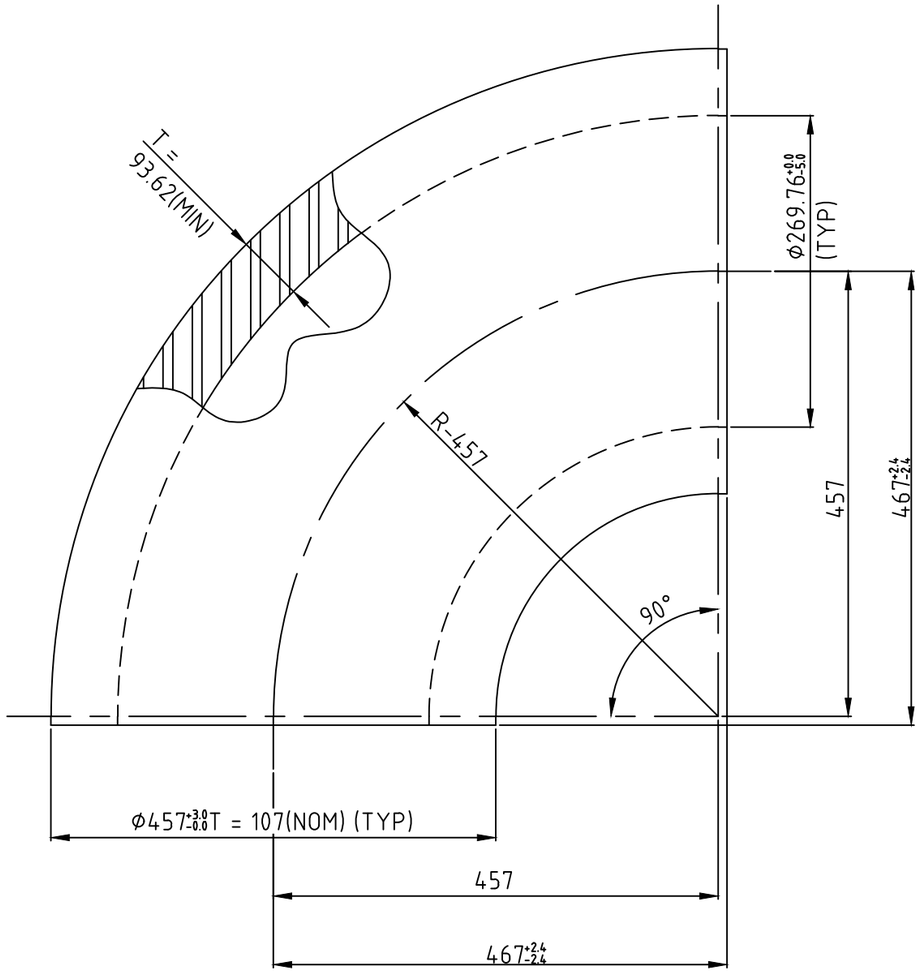

NOTES:

01. DESIGN, MANUFACTURE AND INSPECTION AS PER IBR.

02. ALL DIMENSIONS SHOWN ARE FINISHED DIMENSIONS.

03. NORMALIZING AND TEMPERING IS TO BE DONE AFTER HOT FORMING.

04. FITTING SPECIFICATION : SA234WP12CL1

05. FORMED ELBOW SHALL BE SUPPLIED WITH PLAIN ENDS.

06. THE MAXIMUM THICKNESS SHALL NOT EXCEED (T_{nom} X 1.06) AT ANY POINT ON THE ELBOW.

07. FOR TOLERANCES REFER DRG. 4-03-000-00053.

08. FITTING MATERIAL CODE: 921043530000

VARIANT NUMBER	ITEM NUMBER	DESCRIPTION	STD	DRAWING NUMBER	ITEM NO	MATERIAL CODE	A/C/P	UNIT	UNIT WEIGHT	GS
						SA234WP12CL1	A		662.98	
					VAR NO	MATERIAL SPECN		DI	QUANTITY	

REV	DATE	ALTERED : YADAV
01	29.04.20	CHD & APPD: SRIDHARAN
ZONE	NOTE-06 MODIFIED	

CAUTION: The information on this document is the property of BHARAT HEAVY ELECTRICALS LTD. It must not be used directly or indirectly in any way detrimental to the interest of the company.

TYPE OF PRODUCT
OR NAME OF
CUSTOMER/PROJECT

Bharat Heavy Electricals Ltd
UNIT: HIGH PRESSURE BOILER PLANT
TIRUCHIRAPALLI – 620014
355–055

	NAME	SIGNATURE	DATE
DRN	NNR		10-09-2018
CHD	NNR		11-09-2018
APPD	SAK		11-09-2018

DEPT	PP	ALL DIMENSIONS ARE IN MM	PROJECTION	SCALE	WEIGHT (Kg)	REF TO ASSY / OLD DWG
CODE	121			N.T.S	662.98	

TITLE ELBOW 90 DEG RAW FORMING
Φ457 X 107 NOM

DRAWING NO : 3-10-000-08597

REV 01

DRAWING NO: 3-10-000-09009

FOR TOLERANCES OF UNTOLERANCED DIMENSIONS DURING MANUFACTURE REFER PLANT STD.NO TP 023 0299

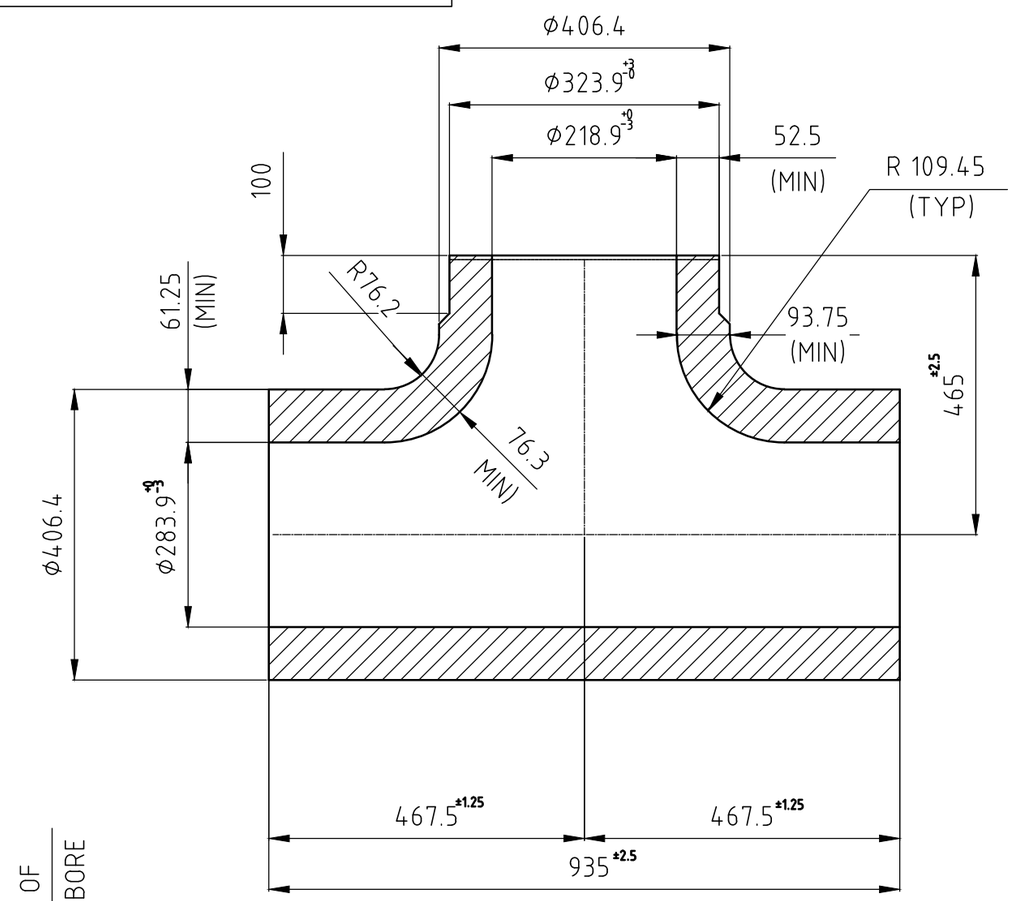

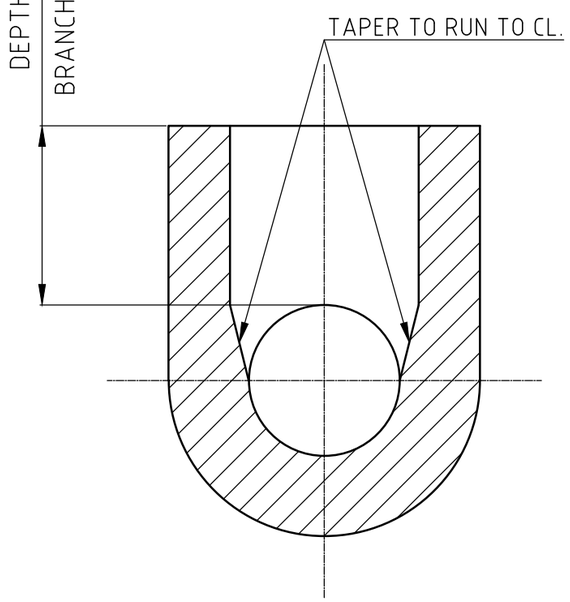

SECTION-AA

NOTES:

1. DESIGN, MANUFACTURE AND INSPECTION AS PER IBR.
2. FOR TOLERANCES REFER 4-03-000-00053.
3. ALL DIMENSIONS SHOWN ARE FINISHED DIMENSIONS.
4. NORMALIZING AND TEMPERING IS TO BE DONE AFTER HOT FORMING.
5. NO THICKNESS GREATER THAN 152.4mm SHALL BE USED WITHOUT PRIOR APPROVAL FROM BHEL.
6. FITTING SPECIFICATION: SA234WP12CL1
7. THE FORMED TEE SHALL BE SUPPLIED WITH PLAIN ENDS.

FITTING MATERIAL CODE: 921052020000

VARIANT NUMBER	ITEM NUMBER	DESCRIPTION	STD	DRAWING NUMBER	ITEM NO	MATERIAL CODE	A/C/P	UNIT	UNIT WEIGHT	GS
							A		604.400	
						SA234WP12CL1				
					VAR NO	MATERIAL SPECN		DI	QUANTITY	

CAUTION: The information on this document is the property of BHARAT HEAVY ELECTRICALS LTD. It must not be used directly or indirectly in any way detrimental to the interest of the company.

TYPE OF PRODUCT OR NAME OF CUSTOMER/PROJECT

Bharat Heavy Electricals Ltd
UNIT: HIGH PRESSURE BOILER PLANT
TIRUCHIRAPALLI – 620014
355–055

	NAME	SIGNATURE	DATE
DRN	YADAV		20.08.2019
CHD	NIRMAL		21.08.2019
APPD	SRIDHARAN		21.08.2019

REV	DATE	ALTERED :
01		CHD & APPD:
ZONE		

DEPT PP | CODE 121 | ALL DIMENSIONS ARE IN MM | PROJECTION | SCALE N.T.S | WEIGHT (Kg) 604.400 | REF TO ASSY / OLD DWG

TITLE **EQUAL TEE**

Φ406.4x107.14(NOM.)/ Φ406.4x70(NOM.)

DRAWING NO : 3-10-000-09009

REV 00

DRAWING NO: 3-10-285-09008

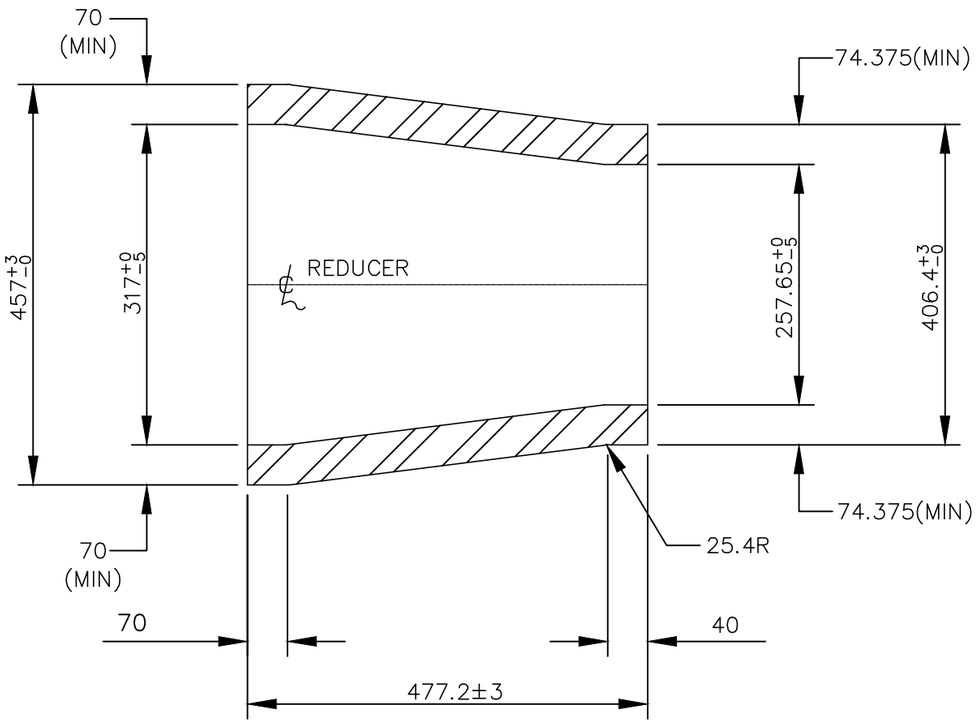

NOTES:

01. DESIGN MANUFACTURE AND INSPECTION AS PER IBR.
02. ALL DIMENSIONS SHOWN ARE FINISHED DIMENSIONS.
03. NORMALISING & TEMPERING IS TO BE DONE AFTER HOT FORMING.
04. FITTING SPECIFICATION : SA234WP22CL1.
05. THE FORMED REDUCER SHALL BE SUPPLIED WITH PLAIN ENDS.

FITTING MATERIAL CODE-921173430000

VARIANT NUMBER	ITEM NUMBER	DESCRIPTION	STD	DRAWING NUMBER	ITEM NO	MATERIAL CODE	A/C/P	UNIT	UNIT WEIGHT	GS
					VAR NO	MATERIAL SPECN		DI	QUANTITY	

CAUTION: The information on this document is the property of BHARAT HEAVY ELECTRICALS LTD. It must not be used directly or indirectly in any way detrimental to the interest of the company.

TYPE OF PRODUCT
OR NAME OF
CUSTOMER/PROJECT

355-055

Bharat Heavy Electricals Ltd
UNIT: HIGH PRESSURE BOILER PLANT
TIRUCHIRAPALLI - 620014

	NAME	SIGNATURE	DATE
DRN	YADAV		23.09.19
CHD	YADAV		24.09.19
APPD	KS		24.09.19

REV	DATE	ALTERED :
01		CHD & APPD:
ZONE		

DEPT	ALL DIMENSIONS ARE IN MM	PROJECTION	SCALE	WEIGHT (Kg)	REF TO ASSY / OLD DWG
PP			NTS	325.520	
CODE 121					

TITLE
REDUCER-RAW FORMING
D457x80(NOM)/D406.4x85(NOM)

DRAWING NO : 3-10-285-09008
REV 00

DRAWING NO: 3-12-000-15466

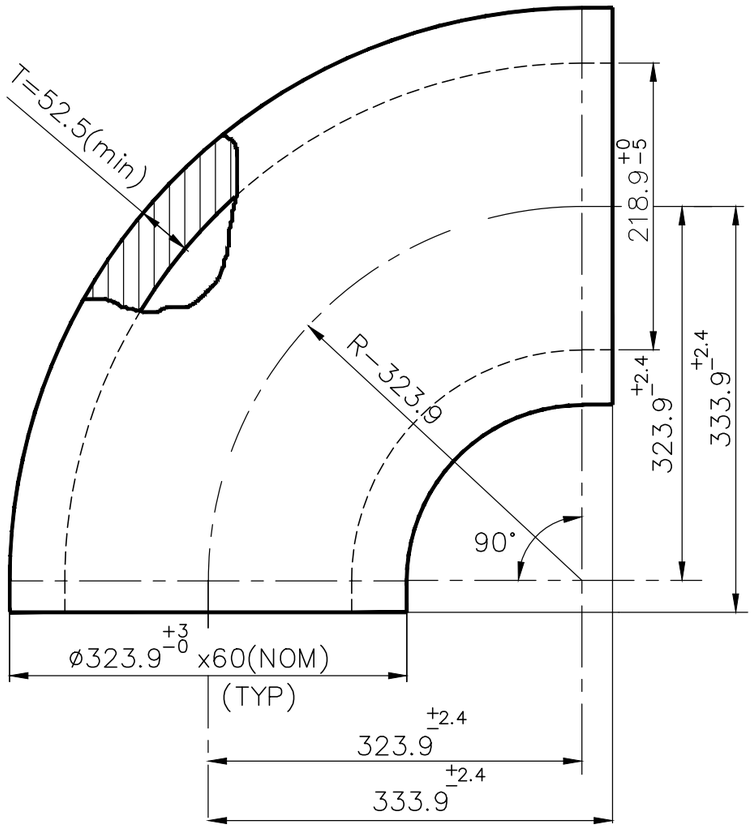

NOTES:

01. DESIGN MANUFACTURE AND INSPECTION AS PER IBR.
02. THE FORMED ELBOW SHALL BE SUPPLIED WITH PLAIN ENDS.
03. ALL DIMENSIONS SHOWN ARE FINISHED DIMENSIONS.
04. NORMALISING AND TEMPERING IS TO BE DONE AFTER HOT FORMING.
05. FITTING SPECIFICATION : SA 234 WP12CL1
06. THE MAX THICKNESS SHALL NOT EXCEED (Tnom X 1.06) AT ANY POINT ON THE ELBOW.

FITTING MATERIAL CODE:- 921044400000

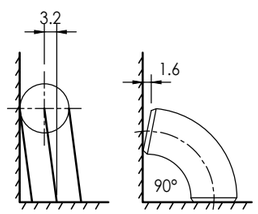

OFF-SQUARE TOLERANCES

VARIANT NUMBER	ITEM NUMBER	DESCRIPTION	STD	DRAWING NUMBER			A/C/P	UNIT		GS
							A		205.170	
						SA234WP12CL1				
					ITEM NO	MATERIAL CODE			UNIT WEIGHT	
					VAR NO	MATERIAL SPECN		DI	QUANTITY	

REV	DATE	ALTERED : YADAV
01	29.04.20	CHD & APPD: SRIDHARAN
ZONE	NOTE-06 MODIFIED	

CAUTION: The information on this document is the property of BHARAT HEAVY ELECTRICALS LTD. It must not be used directly or indirectly in any way detrimental to the interest of the company.

TYPE OF PRODUCT OR NAME OF CUSTOMER/PROJECT

Bharat Heavy Electricals Ltd
UNIT: HIGH PRESSURE BOILER PLANT
TIRUCHIRAPALLI - 620014
355-055

	NAME	SIGNATURE	DATE
DRN	YADAV		20.09.2019
CHD	NIRMAL		20.09.2019
APPD	KS		20.09.2019

DEPT	CODE	ALL DIMENSIONS ARE IN MM	PROJECTION	SCALE	WEIGHT (Kg)	REF TO ASSY / OLD DWG
PP	121			NTS	205.170	

TITLE
ELBOW 90 DEG- RAW FORMING
D323.9x60(NOM)

DRAWING NO : 3-12-000-15466 REV 01

DRAWING NO: 3-12-000-15470

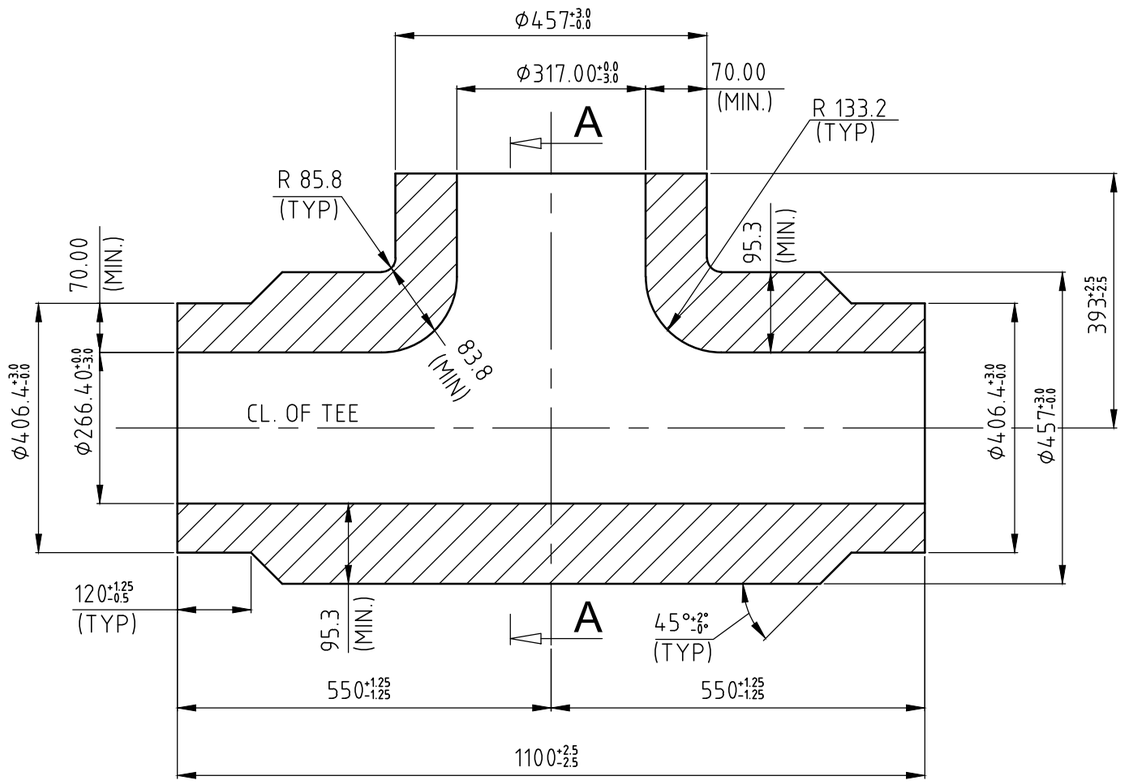

NOTES:

1. DESIGN, MANUFACTURE AND INSPECTION AS PER IBR.
2. FOR TOLERANCES REFER 4-03-000-00053.
3. ALL DIMENSIONS SHOWN ARE FINISHED DIMENSIONS.
4. NORMALIZING AND TEMPERING IS TO BE DONE AFTER HOT FORMING.
5. NO THICKNESS GREATER THAN 152.4mm SHALL BE USED WITHOUT PRIOR APPROVAL FROM BHEL.
6. FITTING SPECIFICATION: SA234WP12CL1
7. THE FORMED TEE SHALL BE SUPPLIED WITH PLAIN ENDS.

FITTING MATERIAL CODE: 921051910000

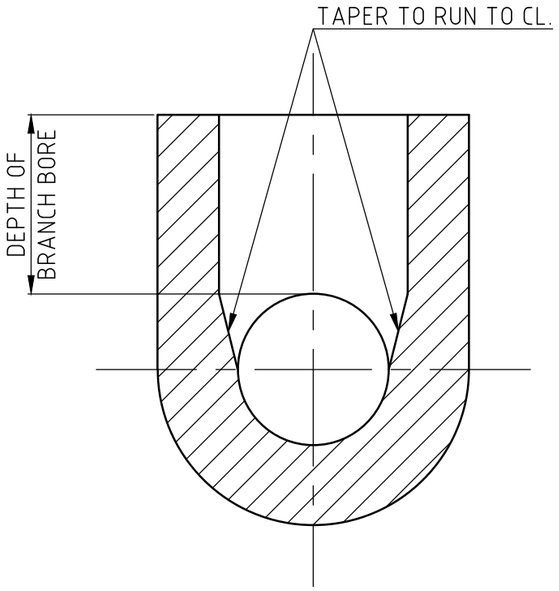

SECTION-AA

VARIANT NUMBER	ITEM NUMBER	DESCRIPTION	STD	DRAWING NUMBER	ITEM NO	MATERIAL CODE	A/C/P	UNIT	UNIT WEIGHT	GS
							A		973.000	
						SA234WP12CL1				
					VAR NO	MATERIAL SPECN		DI	QUANTITY	

CAUTION: The information on this document is the property of BHARAT HEAVY ELECTRICALS LTD. It must not be used directly or indirectly in any way detrimental to the interest of the company.

TYPE OF PRODUCT OR NAME OF CUSTOMER/PROJECT

355-055

Bharat Heavy Electricals Ltd
UNIT: HIGH PRESSURE BOILER PLANT
TIRUCHIRAPALLI – 620014

	NAME	SIGNATURE	DATE
DRN	YADAV		24-09-2019
CHD	KS		24-09-2019
APPD	KS		24-09-2019

REV	DATE	ALTERED :
01		CHD & APPD:
ZONE		

DEPT PP | CODE 121 | ALL DIMENSIONS ARE IN MM | PROJECTION | SCALE N.T.S | WEIGHT (Kg) 973.000 | REF TO ASSY / OLD DWG

TITLE **UNEQUAL TEE**
Φ457X80(NOM.)/ Φ406.4X80(NOM.)

DRAWING NO : 3-12-000-15470 | REV 00

DRAWING NO: 3-12-000-15473

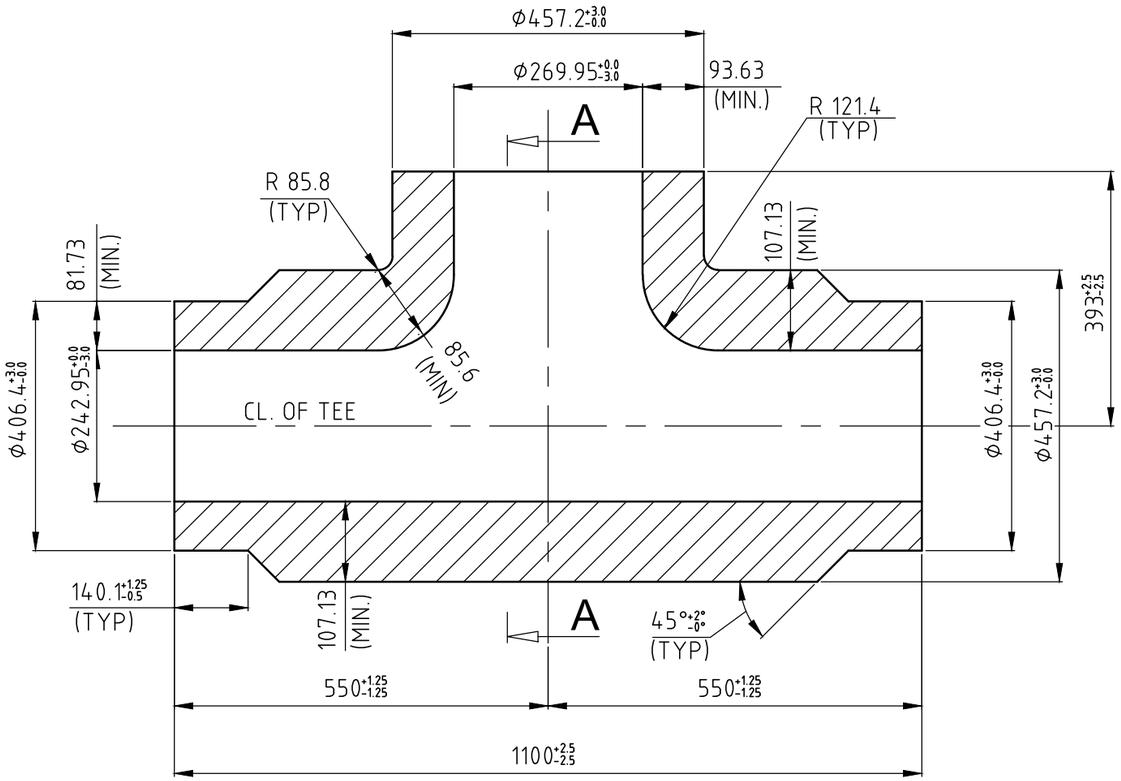

NOTES:

1. DESIGN, MANUFACTURE AND INSPECTION AS PER IBR.
2. FOR TOLERANCES REFER 4-03-000-00053.
3. ALL DIMENSIONS SHOWN ARE FINISHED DIMENSIONS.
4. NORMALIZING AND TEMPERING IS TO BE DONE AFTER HOT FORMING.
5. NO THICKNESS GREATER THAN 152.4mm SHALL BE USED WITHOUT PRIOR APPROVAL FROM BHEL.
6. FITTING SPECIFICATION: SA234WP12CL1
7. THE FORMED TEE SHALL BE SUPPLIED WITH PLAIN ENDS.

FITTING MATERIAL CODE: 921051980000

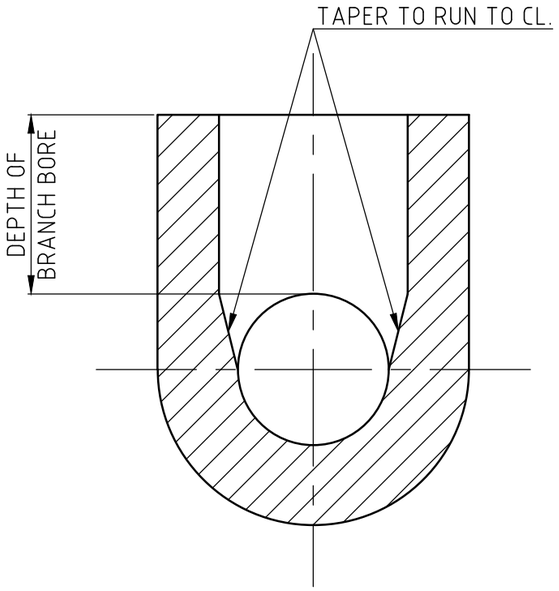

SECTION-AA

VARIANT NUMBER	ITEM NUMBER	DESCRIPTION	STD	DRAWING NUMBER			A/C/P	UNIT		GS
							A		1,086.500	
						SA234WP12CL1				
					ITEM NO	MATERIAL CODE		UNIT	UNIT WEIGHT	
					VAR NO	MATERIAL SPECN		DI	QUANTITY	

REV	DATE	ALTERED :
01		CHD & APPD:
ZONE		

CAUTION: The information on this document is the property of BHARAT HEAVY ELECTRICALS LTD. It must not be used directly or indirectly in any way detrimental to the interest of the company.

TYPE OF PRODUCT OR NAME OF CUSTOMER/PROJECT

355-055

Bharat Heavy Electricals Ltd
UNIT: HIGH PRESSURE BOILER PLANT
TIRUCHIRAPALLI – 620014

	NAME	SIGNATURE	DATE
DRN	YADAV		09-24-2019
CHD	KS		09-24-2019
APPD	KS		09-24-2019

DEPT	PP	ALL DIMENSIONS ARE IN MM	PROJECTION	SCALE	WEIGHT (Kg)	REF TO ASSY / OLD DWG
CODE	121			N.T.S	1,086.500	

TITLE **UNEQUAL TEE**

Φ457.2X107(NOM.)/ Φ406.4X93.4(NOM.)

DRAWING NO : 3-12-000-15473

REV 00

DRAWING NO: 3-12-000-15474

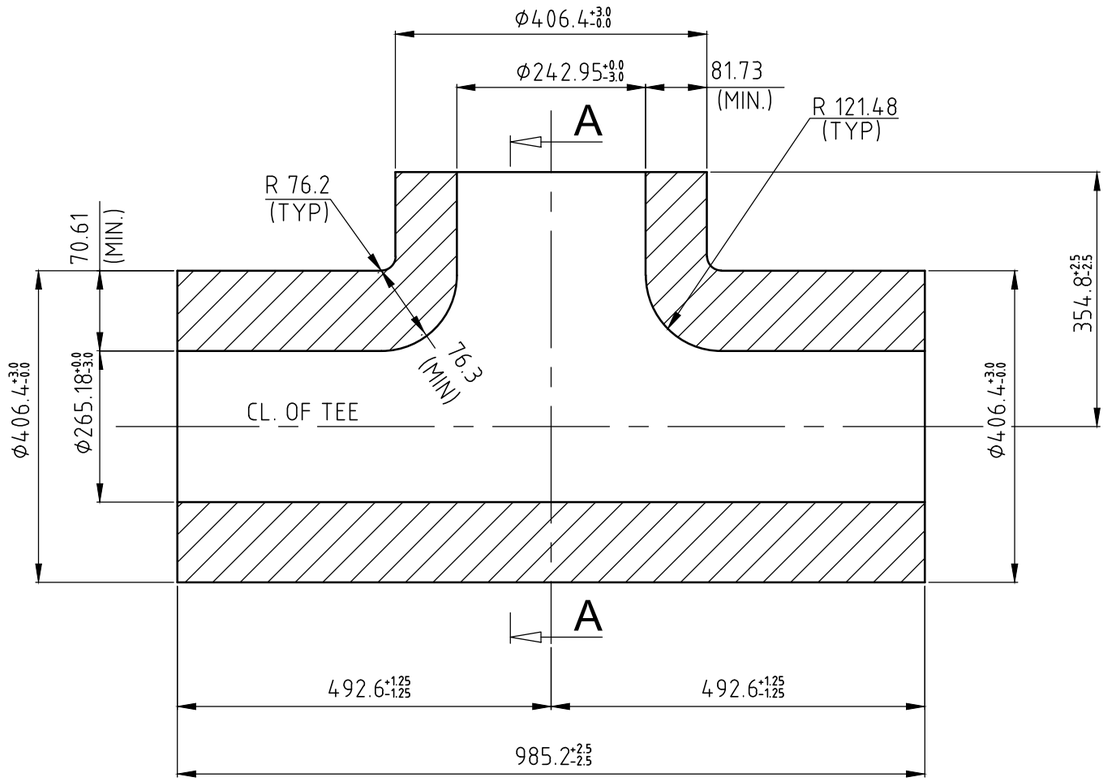

NOTES:

1. DESIGN, MANUFACTURE AND INSPECTION AS PER IBR.
2. FOR TOLERANCES REFER 4-03-000-00053.
3. ALL DIMENSIONS SHOWN ARE FINISHED DIMENSIONS.
4. NORMALIZING AND TEMPERING IS TO BE DONE AFTER HOT FORMING.
5. NO THICKNESS GREATER THAN 152.4mm SHALL BE USED WITHOUT PRIOR APPROVAL FROM BHEL.
6. FITTING SPECIFICATION: SA234WP12CL1
7. THE FORMED TEE SHALL BE SUPPLIED WITH PLAIN ENDS.

FITTING MATERIAL CODE: 921051990000

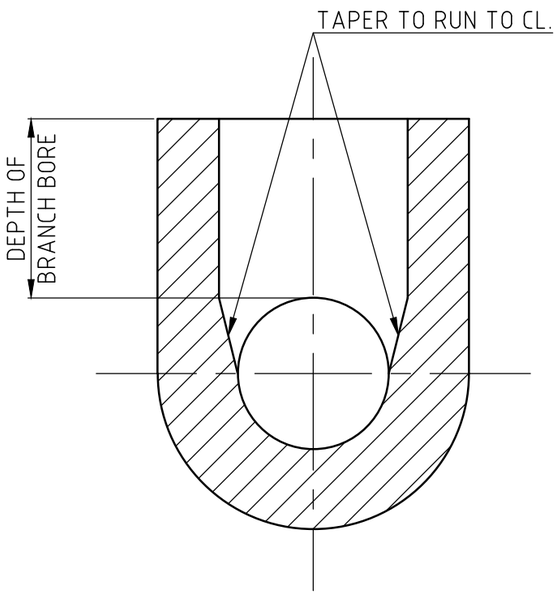

SECTION-AA

VARIANT NUMBER	ITEM NUMBER	DESCRIPTION	STD	DRAWING NUMBER	ITEM NO	MATERIAL CODE	A/C/P	UNIT	UNIT WEIGHT	GS
							A		703.000	
						SA234WP12CL1				
					VAR NO	MATERIAL SPECN		DI	QUANTITY	

TYPE OF PRODUCT OR NAME OF CUSTOMER/PROJECT

355-055

Bharat Heavy Electricals Ltd
UNIT: HIGH PRESSURE BOILER PLANT
TIRUCHIRAPALLI – 620014

	NAME	SIGNATURE	DATE
DRN	YADAV		24-09-2019
CHD	KS		24-09-2019
APPD	KS		24-09-2019

REV	DATE	ALTERED :
01		CHD & APPD:
ZONE		

CAUTION: The information on this document is the property of BHARAT HEAVY ELECTRICALS LTD. It must not be used directly or indirectly in any way detrimental to the interest of the company.

DEPT PP | CODE 121 | ALL DIMENSIONS ARE IN MM | PROJECTION | SCALE N.T.S | WEIGHT (Kg) 703.000 | REF TO ASSY / OLD DWG

TITLE **EQUAL TEE**
Φ406.4X93.4(NOM.)/ Φ406.4X80.7(NOM.)

DRAWING NO : 3-12-000-15474 | REV 00

DRAWING NO: 3-12-852-12079

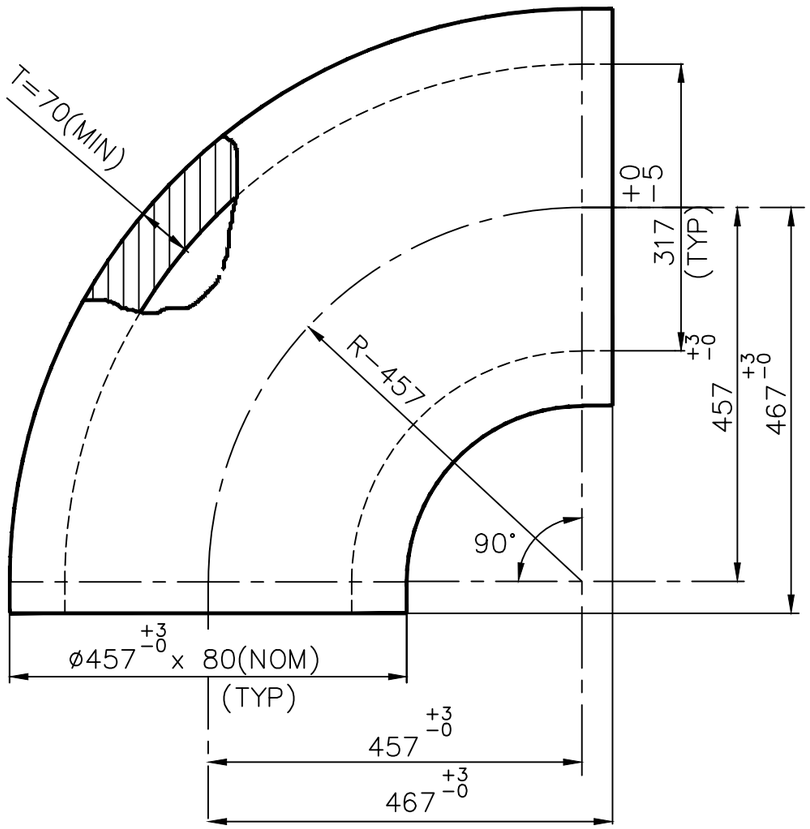

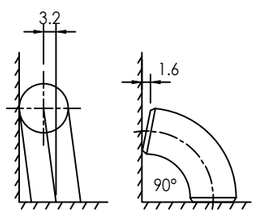

OFF-SQUARE TOLERANCES

NOTES:

01. DESIGN MANUFACTURE AND INSPECTION AS PER IBR.
02. THE FORMED ELBOW SHALL BE SUPPLIED WITH PLAIN ENDS.
03. ALL DIMENSIONS SHOWN ARE FINISHED DIMENSIONS.
04. NORMALISING AND TEMPERING IS TO BE DONE AFTER HOT FORMING.
05. FITTING SPECIFICATION : SA 234 WP12CL1
06. THE MAX THICKNESS SHALL NOT EXCEED (Tnom X 1.06) AT ANY POINT ON THE ELBOW.

FITTING MATERIAL CODE:- 92 104 198 0000

01

VARIANT NUMBER	ITEM NUMBER	DESCRIPTION	STD	DRAWING NUMBER	ITEM NO	MATERIAL CODE	A/C/P	UNIT	UNIT WEIGHT	GS
						921041980000				
						SA234WP12CL1				
					VAR NO	MATERIAL SPECN		DI	QUANTITY	

REV	DATE	ALTERED : YADAV	REV	DATE	ALTERED : DOMINIC
02	29.04.20	CHD & APPD: SRIDHARAN	01	15.11.19	CHD & APPD: YADAV
ZONE	NOTE-06 MODIFIED		ZONE	WEIGHT CORRECTED	

CAUTION: The information on this document is the property of BHARAT HEAVY ELECTRICALS LTD. It must not be used directly or indirectly in any way detrimental to the interest of the company.

TYPE OF PRODUCT OR NAME OF CUSTOMER/PROJECT

Bharat Heavy Electricals Ltd
UNIT: HIGH PRESSURE BOILER PLANT
TIRUCHIRAPALLI - 620014
355-055

	NAME	SIGNATURE	DATE
DRN	ISMAIL		22.09.2014
CHD	R.MURALI		24.09.2014
APPD	S.A.K.		24.09.2014

DEPT	CODE	ALL DIMENSIONS ARE IN MM	PROJECTION	SCALE	WEIGHT (Kg)	REF TO ASSY / OLD DWG
PP	121			NTS	534.000	

TITLE
ELBOW 90 DEG- RAW FORMING
D457x80(NOM)

DRAWING NO : 3-12-852-12079
REV 02

DRAWING NO: 3-12-852-12080

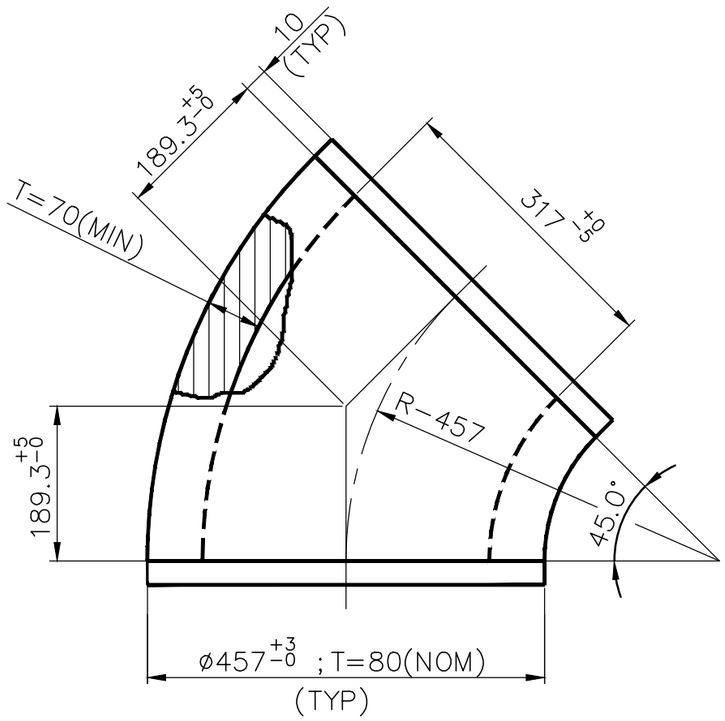

NOTES:

01. DESIGN MANUFACTURE AND INSPECTION AS PER IBR.
02. ALL DIMENSIONS SHOWN ARE FINISHED DIMENSIONS.
03. NORMALISING AND TEMPERING IS TO BE DONE AFTER HOT FORMING.
04. FITTING SPECIFICATION : SA 234 WP12 CL1
05. THE FORMED ELBOW SHALL BE SUPPLIED WITH PLAIN ENDS.
06. THE MAX THICKNESS SHALL NOT EXCEED (Tnom X 1.06) AT ANY POINT ON THE ELBOW.

FITTING MATERIAL CODE : 92 104 199 0000

VARIANT NUMBER	ITEM NUMBER	DESCRIPTION	STD	DRAWING NUMBER	ITEM NO	MATERIAL CODE	A/C/P	UNIT	UNIT WEIGHT	GS
						921041990000				
						SA234WP12CL1				
					VAR NO	MATERIAL SPECN		DI	QUANTITY	

01

REV	DATE	ALTERED : YADAV	REV	DATE	ALTERED : DOMINIC
02	29.04.20	CHD & APPD: SRIDHARAN	01	15.11.19	CHD & APPD: YADAV
ZONE	NOTE-06 MODIFIED		ZONE	WEIGHT CORRECTED	

CAUTION: The information on this document is the property of BHARAT HEAVY ELECTRICALS LTD. It must not be used directly or indirectly in any way detrimental to the interest of the company.

TYPE OF PRODUCT OR NAME OF CUSTOMER/PROJECT

355-055

Bharat Heavy Electricals Ltd
UNIT: HIGH PRESSURE BOILER PLANT
TIRUCHIRAPALLI – 620014

	NAME	SIGNATURE	DATE
DRN	ISMAIL		22.09.2014
CHD	R.MURALI		22.09.2014
APPD	S.A.K.		24.09.2014

DEPT	CODE	ALL DIMENSIONS ARE IN MM	PROJECTION	SCALE	WEIGHT (Kg)	REF TO ASSY / OLD DWG
PP	121			NTS	267.000	

TITLE

ELBOW 45°-RAW FORMING D457 X 80(NOM)

DRAWING NO : 3-12-852-12080

REV 02

DRAWING NO: 3-19-000-06781

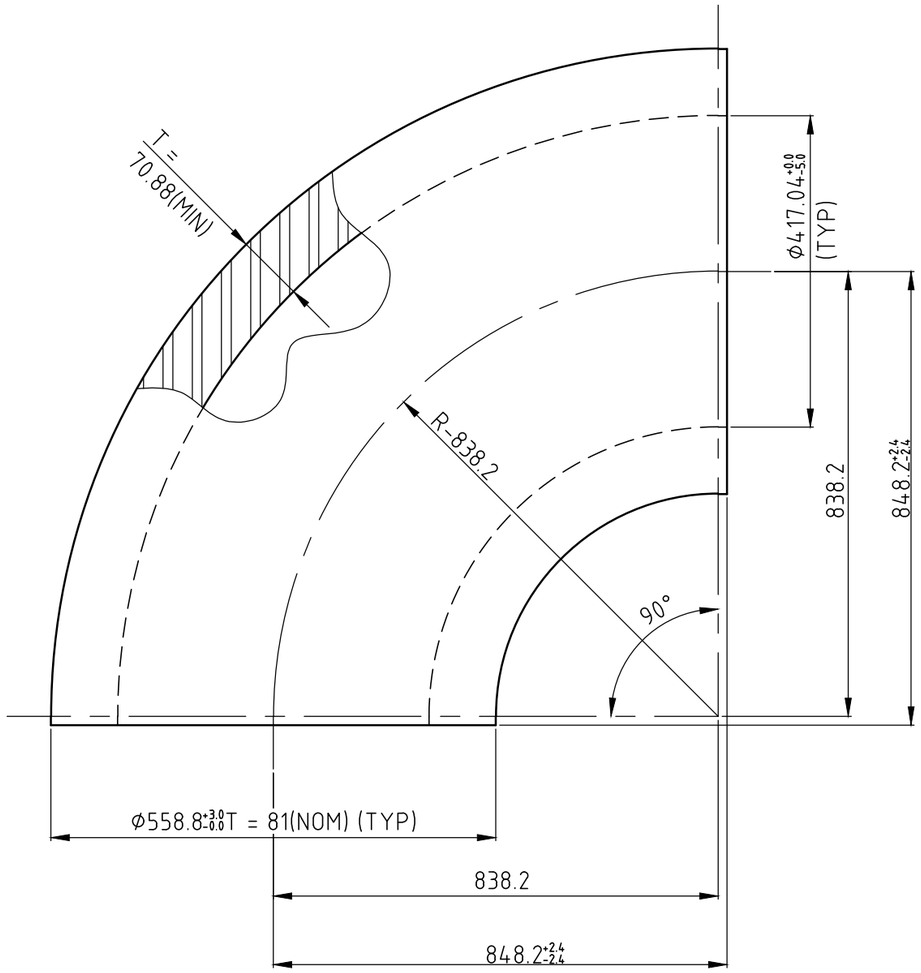

NOTES:

01. DESIGN, MANUFACTURE AND INSPECTION AS PER IBR.

02. ALL DIMENSIONS SHOWN ARE FINISHED DIMENSIONS.

03. NORMALIZING IS TO BE DONE AFTER HOT FORMING.

04. FITTING SPECIFICATION : SA234WPC

05. FORMED ELBOW SHALL BE SUPPLIED WITH PLAIN ENDS.

06. THE MAXIMUM THICKNESS SHALL NOT EXCEED (T_{nom} X 1.06) AT ANY POINT ON THE ELBOW.

07. FOR TOLERANCES REFER DRG. 4-03-000-00053.

08. FITTING MATERIAL CODE: 921044190000

VARIANT NUMBER	ITEM NUMBER	DESCRIPTION	STD	DRAWING NUMBER	ITEM NO	MATERIAL CODE	A/C/P	UNIT	UNIT WEIGHT	GS
						SA234WPC	A		1256.64	
					VAR NO	MATERIAL SPECN		DI	QUANTITY	

REV	DATE	ALTERED : YADAV
01	29.04.20	CHD & APPD: SRIDHARAN
ZONE	NOTE-06 MODIFIED	

CAUTION: The information on this document is the property of BHARAT HEAVY ELECTRICALS LTD. It must not be used directly or indirectly in any way detrimental to the interest of the company.

TYPE OF PRODUCT
OR NAME OF
CUSTOMER/PROJECT

Bharat Heavy Electricals Ltd
UNIT: HIGH PRESSURE BOILER PLANT
TIRUCHIRAPALLI – 620014

355–055

	NAME	SIGNATURE	DATE
DRN	AK DIXIT		10-06-2018
CHD	AK DIXIT		10-06-2018
APPD	SAK		10-06-2018

DEPT	PP	ALL DIMENSIONS ARE IN MM	PROJECTION	SCALE	WEIGHT (Kg)	REF TO ASSY / OLD DWG
CODE	121			N.T.S	1256.64	

TITLE ELBOW 90 DEG RAW FORMING
Φ558.8 X 81 NOM

DRAWING NO : 3-19-000-06781

REV 01

DRAWING NO: 3-19-000-06783

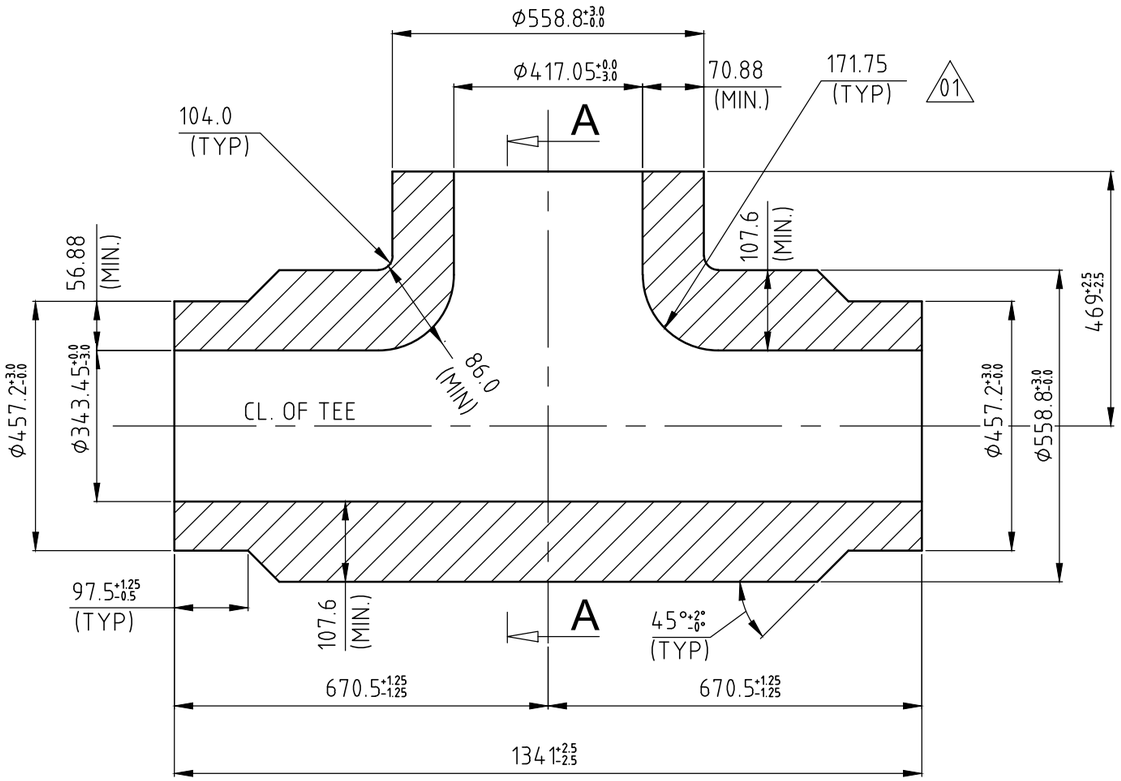

NOTES:

1. DESIGN, MANUFACTURE AND INSPECTION AS PER IBR.
2. FOR TOLERANCES REFER 4-03-000-00053.
3. ALL DIMENSIONS SHOWN ARE FINISHED DIMENSIONS.
4. NORMALIZING IS TO BE DONE AFTER HOT FORMING.
5. NO THICKNESS GREATER THAN 152.4mm SHALL BE USED WITHOUT PRIOR APPROVAL FROM BHEL.
6. FITTING SPECIFICATION: SA234WPC
7. THE FORMED TEE SHALL BE SUPPLIED WITH PLAIN ENDS.

FITTING MATERIAL CODE: 921051710000

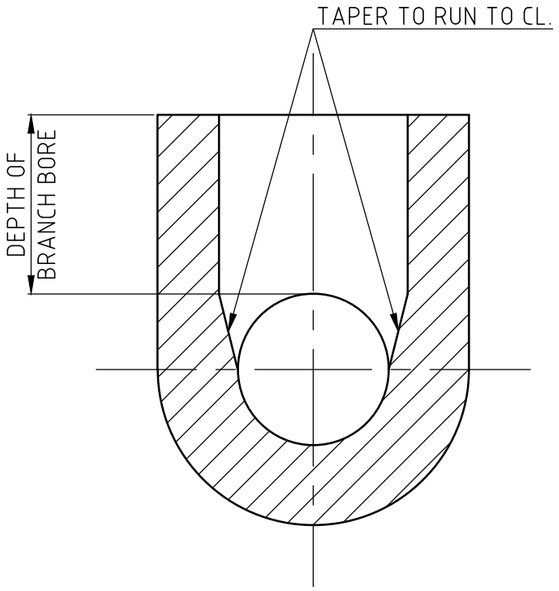

SECTION-AA

VARIANT NUMBER	ITEM NUMBER	DESCRIPTION	STD	DRAWING NUMBER			A/C/P	UNIT		GS
							A		1,735.370	
						SA234WPC				
					ITEM NO	MATERIAL CODE			UNIT WEIGHT	
					VAR NO	MATERIAL SPECN		DI	QUANTITY	

TYPE OF PRODUCT OR NAME OF CUSTOMER/PROJECT

355-055

Bharat Heavy Electricals Ltd
UNIT: HIGH PRESSURE BOILER PLANT
TIRUCHIRAPALLI – 620014

	NAME	SIGNATURE	DATE
DRN	ANEET DIXIT		10-08-2018
CHD	ANEET DIXIT		10-08-2018
APPD	SAK		10-08-2018

REV	DATE	ALTERED : DOMINIC
01	20.11.19	CHD & APPD: YADAV
ZONE	INNER RADIUS SHOWN.	

CAUTION: The information on this document is the property of BHARAT HEAVY ELECTRICALS LTD. It must not be used directly or indirectly in any way detrimental to the interest of the company.

DEPT PP | CODE 121 | ALL DIMENSIONS ARE IN MM | PROJECTION | SCALE N.T.S | WEIGHT (Kg) 1,735.370 | REF TO ASSY / OLD DWG

TITLE **UNEQUAL TEE**
Ø558.8X81(NOM.)/ Ø457.2X65(NOM.)

DRAWING NO : 3-19-000-06783 | REV 01

DRAWING NO: 3-19-000-07170

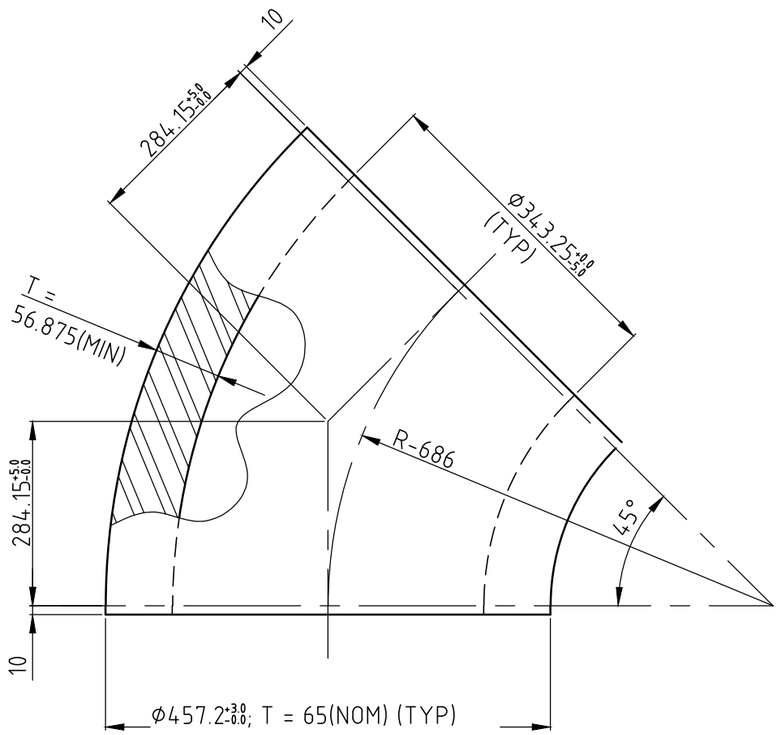

NOTES:

01. DESIGN, MANUFACTURE AND INSPECTION AS PER IBR.

02. ALL DIMENSIONS SHOWN ARE FINISHED DIMENSIONS.

03. NORMALIZING IS TO BE DONE AFTER HOT FORMING.

04. FITTING SPECIFICATION : SA234WPC

05. FORMED ELBOW SHALL BE SUPPLIED WITH PLAIN ENDS.

06. THE MAXIMUM THICKNESS SHALL NOT EXCEED (T_{nom} X 1.06) AT ANY POINT ON THE ELBOW.

07. FOR TOLERANCES REFER DRG. 4-03-000-00053.

08. FITTING MATERIAL CODE: 921044390000

VARIANT NUMBER	ITEM NUMBER	DESCRIPTION	STD	DRAWING NUMBER	ITEM NO	MATERIAL CODE	A/C/P	UNIT	UNIT WEIGHT	GS
							A		351.300	
						SA234WPC				
					VAR NO	MATERIAL SPECN		DI	QUANTITY	

CAUTION: The information on this document is the property of BHARAT HEAVY ELECTRICALS LTD. It must not be used directly or indirectly in any way detrimental to the interest of the company.

TYPE OF PRODUCT OR NAME OF CUSTOMER/PROJECT

355-055

Bharat Heavy Electricals Ltd
UNIT: HIGH PRESSURE BOILER PLANT
TIRUCHIRAPALLI – 620014

	NAME	SIGNATURE	DATE
DRN	YADAV		20.09-2019
CHD	NIRMAL		20.09-2019
APPD	KS		20.09-2019

REV	DATE	ALTERED : YADAV
01	29.04.20	CHD & APPD: SRIDHARAN
ZONE	NOTE-06 MODIFIED	

DEPT PP | CODE 121 | ALL DIMENSIONS ARE IN MM | PROJECTION | SCALE N.T.S | WEIGHT (Kg) 351.300 | REF TO ASSY / OLD DWG

TITLE ELBOW 45 DEG RAW FORMING
Ø457.2 X 65 NOM

DRAWING NO : 3-19-000-07170

REV 01

DRAWING NO: 3-19-000-07213

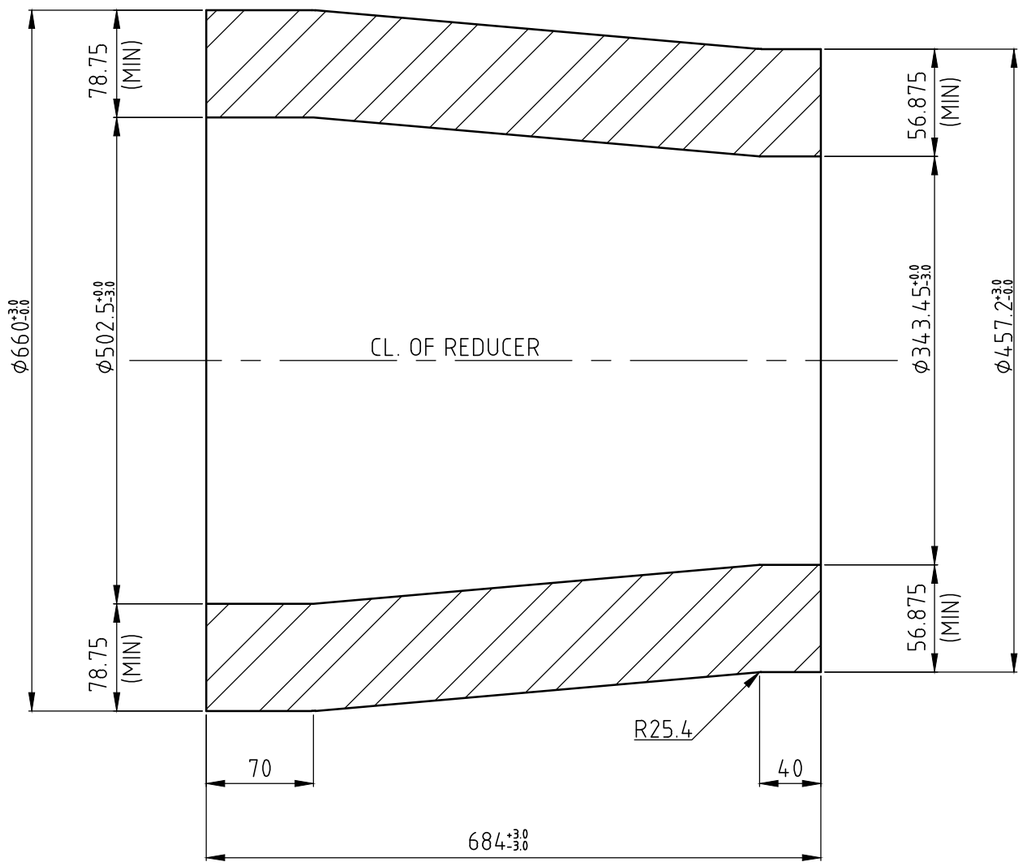

NOTES:

01. DESIGN, MANUFACTURE AND INSPECT AS PER IBR.

02. ALL DIMENSIONS SHOWN ARE FINISHED DIMENSIONS.

03. NORMALIZNG TO BE DONE AFTER HOT FORMING

04. FITTING SPECIFICATION : SA234WPC

05. THE FORMED REDUCER SHALL BE SUPPLIED WITH PLAIN ENDS.

FITTING MATERIAL CODE : 921173470000

VARIANT NUMBER	ITEM NUMBER	DESCRIPTION	STD	DRAWING NUMBER	ITEM NO / VAR NO	MATERIAL CODE / MATERIAL SPECN	A/C/P	UNIT / DI	UNIT WEIGHT / QUANTITY	GS

TYPE OF PRODUCT
OR NAME OF
CUSTOMER/PROJECT

CAUTION: The information on this document is the property of BHARAT HEAVY ELECTRICALS LTD. It must not be used directly or indirectly in any way detrimental to the interest of the company.

Bharat Heavy Electricals Ltd
UNIT: HIGH PRESSURE BOILER PLANT
TIRUCHIRAPALLI – 620014
355–055

	NAME	SIGNATURE	DATE
DRN	YADAV		23.09.19
CHD	YADAV		24.09.19
APPD	KS		24.09.19

REV	DATE	ALTERED :
01		CHD & APPD:
ZONE		

DEPT PP | CODE 121 | ALL DIMENSIONS ARE IN MM | PROJECTION | SCALE N.T.S | WEIGHT (Kg) 639.250 | REF TO ASSY / OLD DWG

TITLE REDUCER RAW FORMING
Φ660 X 90 (NOM)/ Φ457.2 X 65(NOM)

DRAWING NO : 3-19-000-07213 | REV 00

CORPORATE DRG ID:TP-DG-3-19-000-07213/00CORPOR

DRAWING NO: 3-19-000-07214

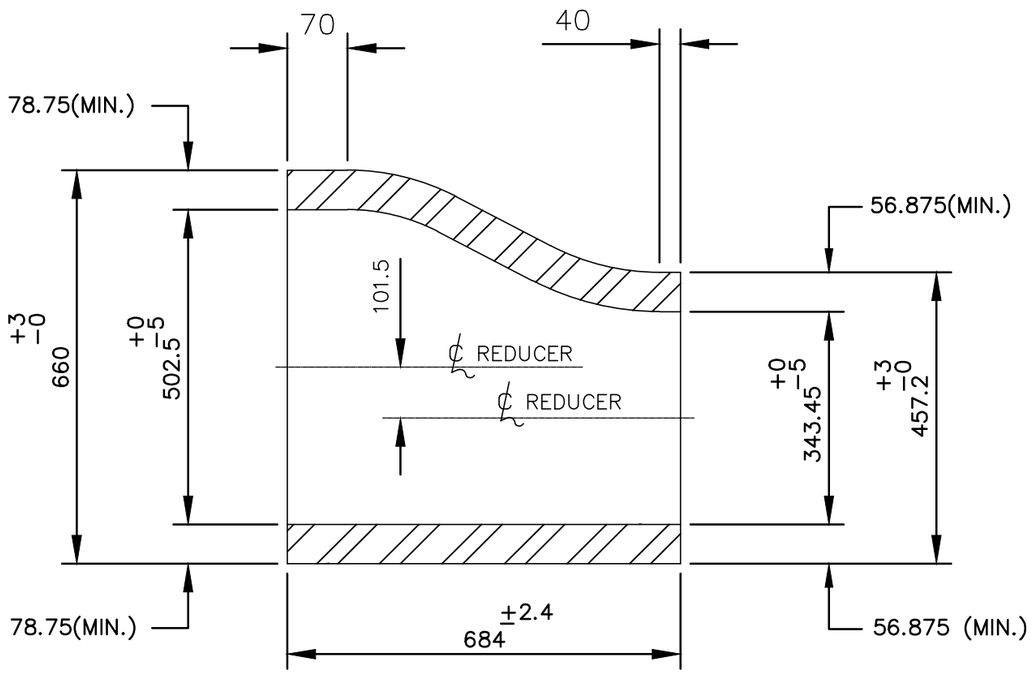

NOTES:

01. DESIGN MANUFACTURE AND INSPECTION AS PER IBR.
02. ALL DIMENSIONS SHOWN ARE FINISHED DIMENSIONS.
03. NORMALISING IS TO BE DONE AFTER HOT FORMING.
04. FITTING SPECIFICATION : SA234 WPC.
05. THE FORMED REDUCER SHALL BE SUPPLIED WITH PLAIN ENDS.
06. FOR TOLERANCES REFER STD.DRG.NO: 4-03-000-00053.

FITTING MATERIAL CODE- 921173480000

VARIANT NUMBER	ITEM NUMBER	DESCRIPTION	STD	DRAWING NUMBER	ITEM NO	MATERIAL CODE	A/C/P	UNIT	UNIT WEIGHT	GS
					VAR NO	MATERIAL SPECN		DI	QUANTITY	

CAUTION: The information on this document is the property of BHARAT HEAVY ELECTRICALS LTD. It must not be used directly or indirectly in any way detrimental to the interest of the company.

TYPE OF PRODUCT
OR NAME OF
CUSTOMER/PROJECT

Bharat Heavy Electricals Ltd
UNIT: HIGH PRESSURE BOILER PLANT
TIRUCHIRAPALLI – 620014
355-055

	NAME	SIGNATURE	DATE
DRN	YADAV		23.09.19
CHD	YADAV		24.09.19
APPD	KS		24.09.19

REV	DATE	ALTERED :
01		CHD & APPD:
ZONE		

DEPT	ALL DIMENSIONS ARE IN MM	PROJECTION	SCALE	WEIGHT (Kg)	REF TO ASSY / OLD DWG
PP			NTS	575.000	
CODE 121					

TITLE
ECCENTRIC REDUCER-RAW FORMING
D660X90(NOM)/D457.2X65(NOM)

DRAWING NO : 3-19-000-07214
REV 00

CORPORATE DRG ID:TP-DG-3-19-000-07214/00CORPOR

DRAWING NO: 3-19-000-07215

FOR TOLERANCES OF UNTOLERANCED DIMENSIONS DURING MANUFACTURE REFER PLANT STD.NO TP 023 0299

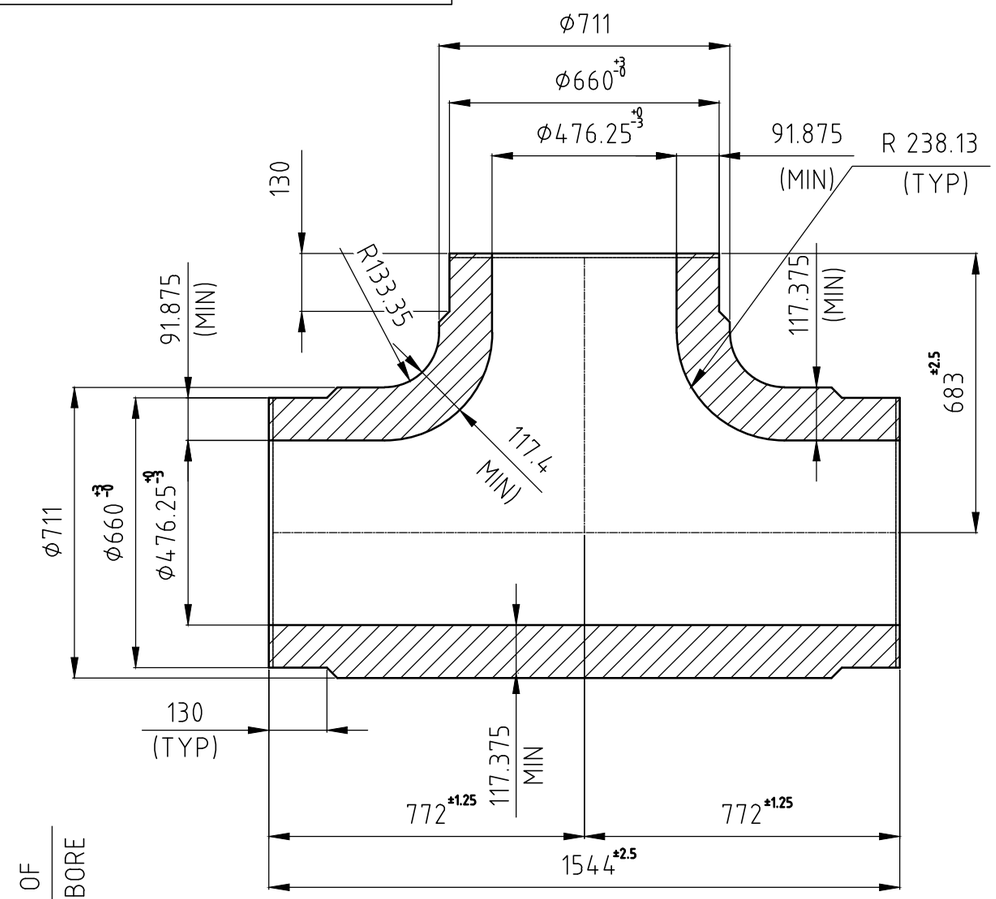

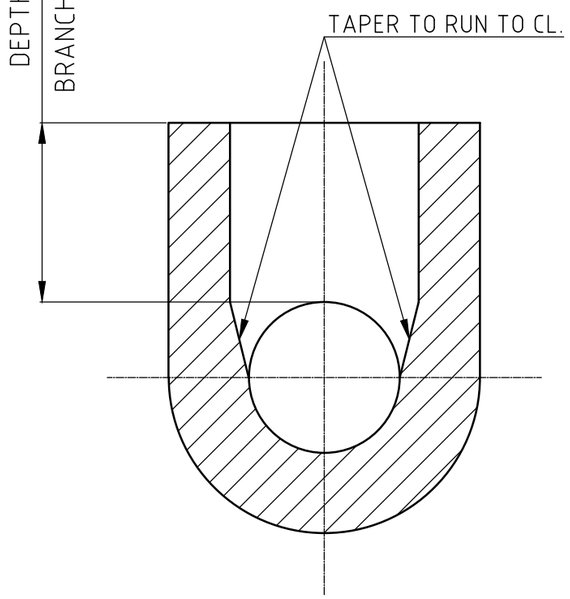

SECTION-AA

NOTES:

1. DESIGN, MANUFACTURE AND INSPECTION AS PER IBR.
2. FOR TOLERANCES REFER 4-03-000-00053.
3. ALL DIMENSIONS SHOWN ARE FINISHED DIMENSIONS.
4. NORMALIZING IS TO BE DONE AFTER HOT FORMING.
5. NO THICKNESS GREATER THAN 152.4mm SHALL BE USED WITHOUT PRIOR APPROVAL FROM BHEL.
6. FITTING SPECIFICATION: SA234WPC
7. THE FORMED TEE SHALL BE SUPPLIED WITH PLAIN ENDS.

FITTING MATERIAL CODE: 921052050000

VARIANT NUMBER	ITEM NUMBER	DESCRIPTION	STD	DRAWING NUMBER	ITEM NO	MATERIAL CODE	A/C/P	UNIT	UNIT WEIGHT	GS
							A		3521.000	
						SA234WPC				
					VAR NO	MATERIAL SPECN		DI	QUANTITY	

CAUTION: The information on this document is the property of BHARAT HEAVY ELECTRICALS LTD. It must not be used directly or indirectly in any way detrimental to the interest of the company.

TYPE OF PRODUCT OR NAME OF CUSTOMER/PROJECT

355-055

Bharat Heavy Electricals Ltd
UNIT: HIGH PRESSURE BOILER PLANT
TIRUCHIRAPALLI – 620014

	NAME	SIGNATURE	DATE
DRN	YADAV		20.08.2019
CHD	NIRMAL		21.08.2019
APPD	SRIDHARAN		21.08.2019

REV	DATE	ALTERED :
01		CHD & APPD:
ZONE		

DEPT PP | CODE 121 | ALL DIMENSIONS ARE IN MM | PROJECTION | SCALE N.T.S | WEIGHT (Kg) 3521.000 | REF TO ASSY / OLD DWG

TITLE **EQUAL TEE**

Ø660x105(NOM.)/ Ø660x105(NOM.)

DRAWING NO : 3-19-000-07215

REV 00

CORPORATE DRG ID:TP-DG-3-19-000-07215/00CORPOR

DRAWING NO: 3-19-850-06782

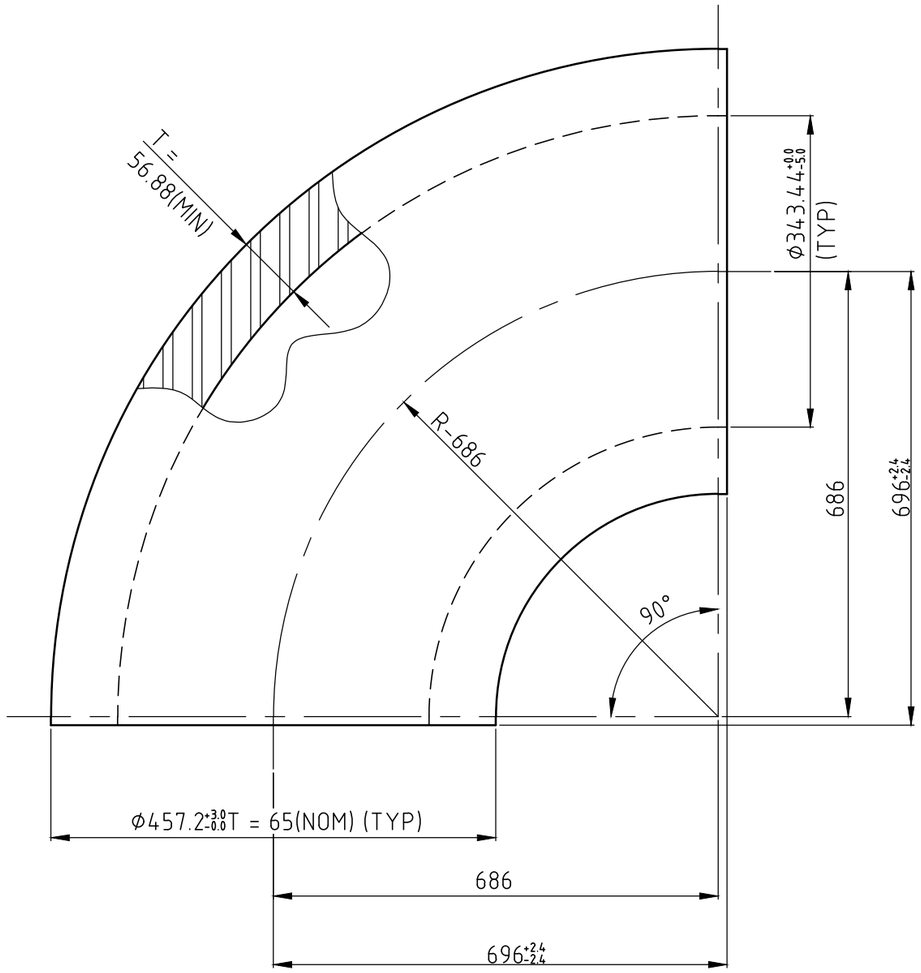

NOTES:

01. DESIGN, MANUFACTURE AND INSPECTION AS PER IBR.

02. ALL DIMENSIONS SHOWN ARE FINISHED DIMENSIONS.

01 03. NORMALIZING IS TO BE DONE AFTER HOT FORMING.

04. FITTING SPECIFICATION : SA234WPC

05. FORMED ELBOW SHALL BE SUPPLIED WITH PLAIN ENDS.

06. THE MAXIMUM THICKNESS SHALL NOT EXCEED (T_{nom} X 1.06) AT ANY POINT ON THE ELBOW.

07. FOR TOLERANCES REFER DRG. 4-03-000-00053.

08. FITTING MATERIAL CODE: 921044180000

VARIANT NUMBER	ITEM NUMBER	DESCRIPTION	STD	DRAWING NUMBER	ITEM NO	MATERIAL CODE	A/C/P	UNIT	UNIT WEIGHT	GS
						SA234WPC	A		677.45	
					VAR NO	MATERIAL SPECN		DI	QUANTITY	

REV	DATE	ALTERED : YADAV	REV	DATE	ALTERED : SUDHAKAR
02	29.04.20	CHD & APPD: SRIDHARAN	01	14.11.2019	CHD & APPD: YADAV
ZONE	NOTE-06 MODIFIED		ZONE	NOTES UPDATED.	

CAUTION: The information on this document is the property of BHARAT HEAVY ELECTRICALS LTD. It must not be used directly or indirectly in any way detrimental to the interest of the company.

TYPE OF PRODUCT OR NAME OF CUSTOMER/PROJECT

355-055

Bharat Heavy Electricals Ltd
UNIT: HIGH PRESSURE BOILER PLANT
TIRUCHIRAPALLI – 620014

	NAME	SIGNATURE	DATE
DRN	AK DIXIT		10-06-2018
CHD	AK DIXIT		10-06-2018
APPD	SAK		10-06-2018

DEPT	CODE	ALL DIMENSIONS ARE IN MM	PROJECTION	SCALE	WEIGHT (Kg)	REF TO ASSY / OLD DWG
PP	121			N.T.S	677.45	

TITLE ELBOW 90 DEG RAW FORMING
Φ457.2 X 65 NOM

DRAWING NO : 3-19-850-06782

REV 02

DRAWING NO: 3-24-805-04327

12.5

NOTES:

01. DESIGN MANUFACTURE AND INSPECTION AS PER IBR.
02. FOR TOLERANCES REFER STD.DRG.NO: 4-03-000-00053.
03. ALL DIMENSIONS SHOWN ARE FINISHED DIMENSIONS IN mm
04. NORMALISING IS TO BE DONE AFTER HOT FORMING.
05. NO THICKNESS GREATER THAN 152.4mm SHALL BE USED WITHOUT PRIOR BHEL APPROVAL.

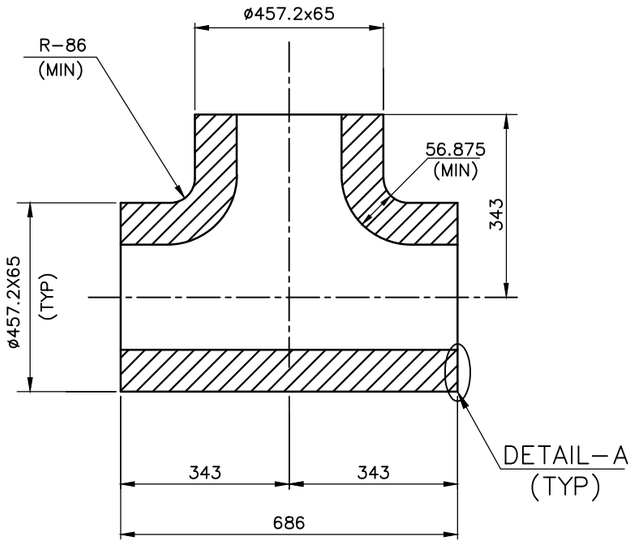

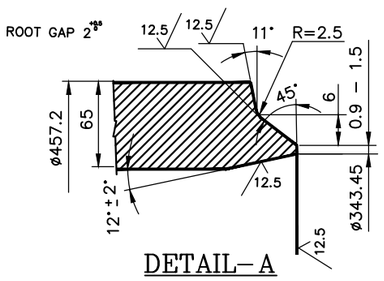

DETAIL-A

VARIANT NUMBER	ITEM NUMBER	DESCRIPTION	STD	DRAWING NUMBER			A/C/P			GS
		BW EQUAL TEE D457.2X65				921051480000	A		575	
						SA234WPC				
					ITEM NO	MATERIAL CODE		UNIT	UNIT WEIGHT	
					VAR NO	MATERIAL SPECN		DI	QUANTITY	

REV	DATE	ALTERED :
01		CHD & APPD:
ZONE		

CAUTION: The information on this document is the property of BHARAT HEAVY ELECTRICALS LTD. It must not be used directly or indirectly in any way detrimental to the interest of the company.

TYPE OF PRODUCT
OR NAME OF
CUSTOMER/PROJECT

Bharat Heavy Electricals Ltd
UNIT: HIGH PRESSURE BOILER PLANT
TIRUCHIRAPALLI - 620014
355-055

	NAME	SIGNATURE	DATE
DRN	VENKAT		10.05.2018
CHD	RAVIRAJA		10.05.2018
APPD	K.SRIDHARAN		10.05.2018

DEPT	ALL DIMENSIONS ARE IN MM	PROJECTION	SCALE	WEIGHT (Kg)	REF TO ASSY / OLD DWG
BM			NTS	575	-
CODE 121					

TITLE

BW EQUAL TEE D457.2X65

DRAWING NO : 3-24-805-04327

REV 00

DRAWING NO: 3-24-809-04325

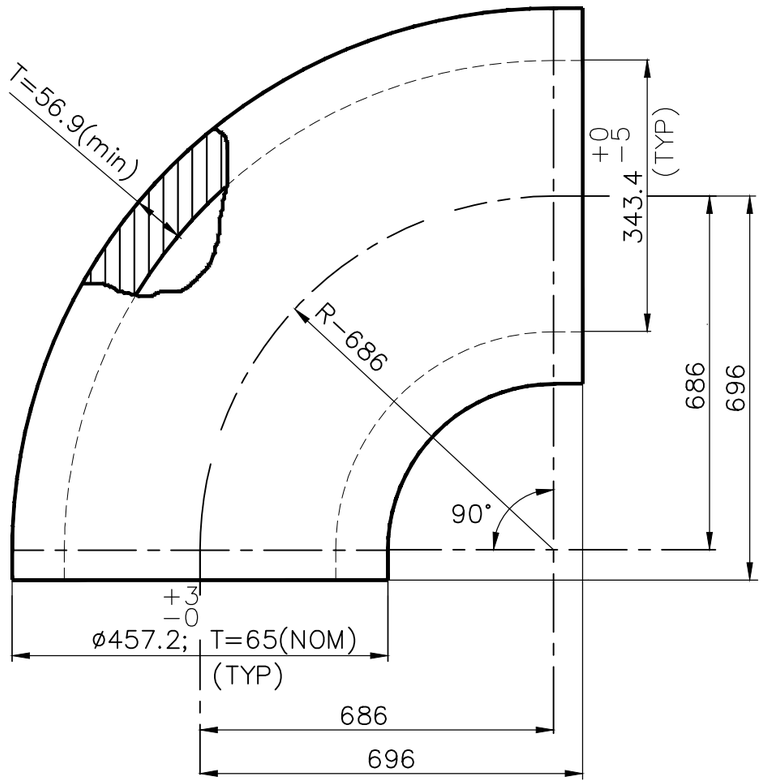

NOTES:

01. DESIGN MANUFACTURE AND INSPECTION AS PER IBR.
02. FOR TOLERANCES REFER STD.DRG.NO: 4-03-000-00053.
03. ALL DIMENSIONS SHOWN ARE FINISHED DIMENSIONS IN mm
04. NORMALISING TO BE DONE AFTER HOT FORMING.
05. FITTING SPECIFICATION : SA234WPC
06. THE FORMED ELBOW SHALL BE SUPPLIED WITH PLAIN ENDS.

VARIANT NUMBER	ITEM NUMBER	DESCRIPTION	STD	DRAWING NUMBER	ITEM NO / VAR NO	MATERIAL CODE / MATERIAL SPECN	A/C/P	UNIT / DI	UNIT WEIGHT / QUANTITY	GS
		90° LR ELBOW D457.2 x 65.0				921043980000 / SA234WPC	A		675.000	

CAUTION: The information on this document is the property of BHARAT HEAVY ELECTRICALS LTD. It must not be used directly or indirectly in any way detrimental to the interest of the company.

TYPE OF PRODUCT OR NAME OF CUSTOMER/PROJECT

Bharat Heavy Electricals Ltd
UNIT: HIGH PRESSURE BOILER PLANT
TIRUCHIRAPALLI – 620014
355-055

	NAME	SIGNATURE	DATE
DRN	VENKAT		10.05.2018
CHD	RAVIRAJA		10.05.2018
APPD	K.SRIDHARAN		10.05.2018

DEPT PP
CODE 121
ALL DIMENSIONS ARE IN MM
PROJECTION
SCALE NTS
WEIGHT (Kg) 675.00
REF TO ASSY / OLD DWG

TITLE
90 DEG LR ELBOW (RAW FORMING)
D457.2 X 65

DRAWING NO : 3-24-809-04325
REV 00

CAUTION: THE INFMN ON THIS DOCUMENT IS THE PROPERTY OF BHEL. IT MUST NOT BE USED DIRECTLY OR INDIRECTLY IN ANY WAY DETRIMENTAL TO THE INTEREST OF BHEL

REV	DATE	ALTERED : S.NACHIAPPAN
01	08/04/13	CHD & APPD : K.SRIDHARAN

1. RAW MATERIAL SPECIFICATION DELETED IN NOTES.
2. NOTES SERIAL NUMBERS REVISED.

REV	DATE	ALTERED : P.J.SAJI
02	24/05/18	CHD & APPD : K.SRIDHARAN

1. WEIGHT REVISED

FOR TOLERANCES OF UNTOLERANCED DIMENSIONS DURING MANUFACTURE REFER PLANT STD. NO TP 023 0299

12.5

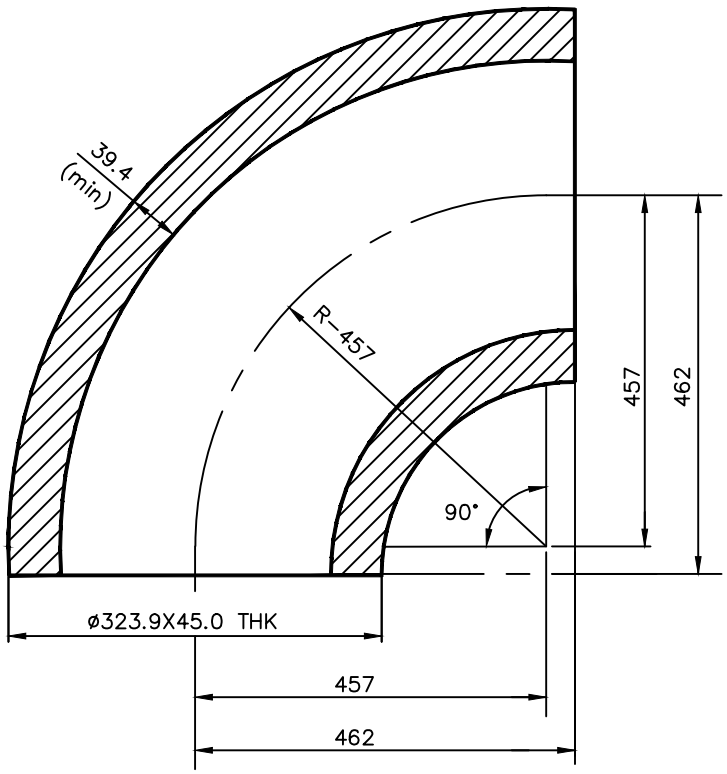

NOTES:

01. DESIGN MANUFACTURE AND INSPECTION AS PER IBR 1950.
02. FOR TOLERANCES REFER STD.DRG.NO: 4-03-000-00053.
03. ALL DIMENSIONS SHOWN ARE IN mm
04. NORMALISING IS TO BE DONE AFTER HOT FORMING.
05. FITTING SPECIFICATION : SA234 WPC. (01)
06. THE FORMED ELBOW SHALL BE SUPPLIED WITH PLAIN ENDS.

VARIANT NUMBER	DESCRIPTION	STD	MATERIAL CODE / MATERIAL SPECN	A/C/P	UNIT	UNIT WEIGHT / QUANTITY
	90° LR ELBOW ø323.9X45.0 THK		921047460000	A		221.200
			SA234WPC			

		NAME	SIGNATURE	DATE
Bharat Heavy Electricals Ltd, UNIT: HIGH PRESSURE BOILER PLANT, TIRUCHIRAPALLI - 620014 (355-056)	DRN	ARUL		10-02-2011
	CHD	VIJAY		10-02-2011
	APPD	K.P		10-02-2011

DEPT	ALL DIMENSIONS ARE IN MM	PROJECTION	SCALE	WEIGHT (Kg)	REF TO ASSY / OLD DWG
BM			NTS	221.200	F-61A, 61B & 61C.
CODE 121					

TITLE: 90° LR ELBOW-D323.9X45.0 THK (RAW FORMING)

DRAWING NO : 4-24-000-08437 REV 02

Report ID: GEM/GARPTS/30092020/MTO4X49WQUI0
Generated By: Prakash Tantuway , Department of Heavy Industry , Ministry of Heavy Industries and Public Enterprises

Generated On: 30/09/2020
Valid till: 30/10/2020

GeM Availability Report and Past Transaction Summary

GeM Availability Report and past transaction summary report is generated based on the specifications searched by the Buyer. The specification may be modified appropriately for searching relevant categories on GeM. Buyer may navigate to GeM category page by clicking on the category link to view category specifications and products/services available in the category.

Order Count and Order Value displayed is on a cumulative basis since GeM inception.

1. Search String: fitting

Search type: Product

1. There are categories available on GeM matching your requirements (as listed here). You can create a bid on GeM with a product closest matching your required specifications and add additional parameters in specifications through Corrigendum using RMS functionality.
2. If you feel that category TP needs updating you can submit category updating request also through RMS.
3. If you do not want to use any of the above option and want to proceed for procurement outside GeM, please suggest the specifications of the required product for creation of new category on GeM for future procurement.

Search Result: Category available/suggested on GeM but marked as "not matching requirements" by the buyer with undertaking as under:

It is certified that I have thoroughly checked all probable categories suggested by GeM and I am satisfied that the product required is not covered / does not fall in any of the suggested categories and can not be procured under any of these categories even after inclusion of List of Values(LOV) wherever possible in category specifications of suggested categories. It is also certified that the technical specification requirement are such that these can not be covered even by adding specification parameters using ATC in any of the GeM suggested categories. The specifications of the required product have been uploaded in RMS vide RMS request no LIB132061 which may be taken up by GeM for new category creation.

		Order Count	Order Value (in Lakhs)

Category Name	Catalog Count	Direct Purchase	Reverse Auction	Bid	Direct Purchase	Reverse Auction	Bid
Tee Pipe Fittings	-	-	-	-	-	-	-
Modular Work Stations	6,047	2,293	28	542	5,207	282	3,200
PTFE Pipe fittings	0	0	0	0	0	0	0
wrought austenitic stainless steel pipe fittings	22	1	0	0	0	0	0
Commercial CPVC Pipe Fittings	1,423	4,673	43	102	181	1	6
Steel Pipes Fitting	1,852	26,206	3	286	1,297	1	79
Commercial PPR Pipes Fittings	357	720	0	5	41	0	0
Boots Ankle Leather Printed Grain For General Purpose - JSS Specification	243	145	3	13	312	25	35
Butt-Weld Pipe Fittings	0	0	0	0	0	0	0
ductile iron fittings-DI	67	421	1	10	148	1	5