TP-DG-2-V-5904-02477F
CORPORATE DRG ID

DRAWING NO. 2-V-5904-02477F

ALL DIMENSIONS ARE IN MILLIMETRES. FOR TOLERANCES OF UNTOLERANCED DIMENSIONS DURING MANUFACTURE REFER RELEVANT QCP / QP

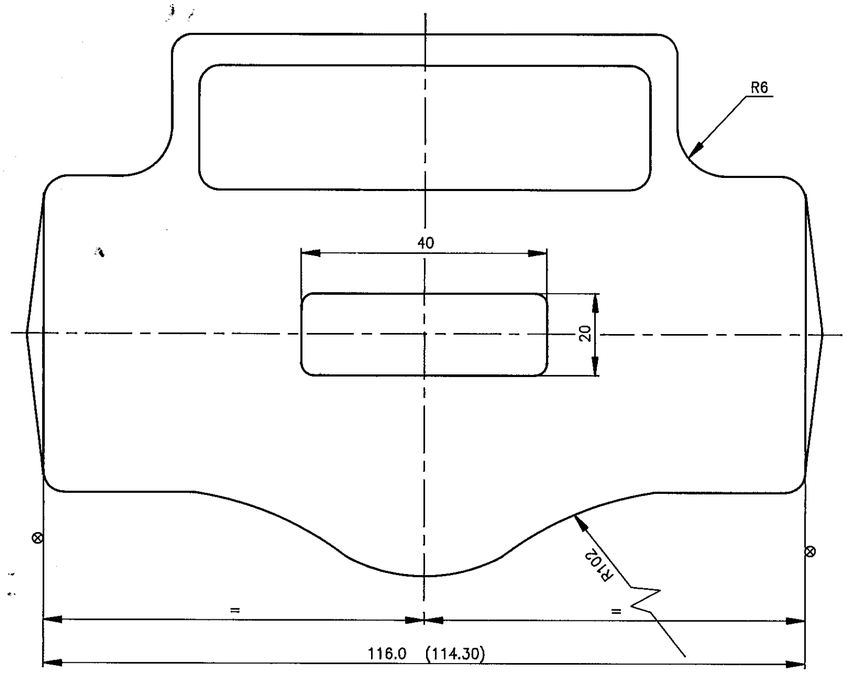

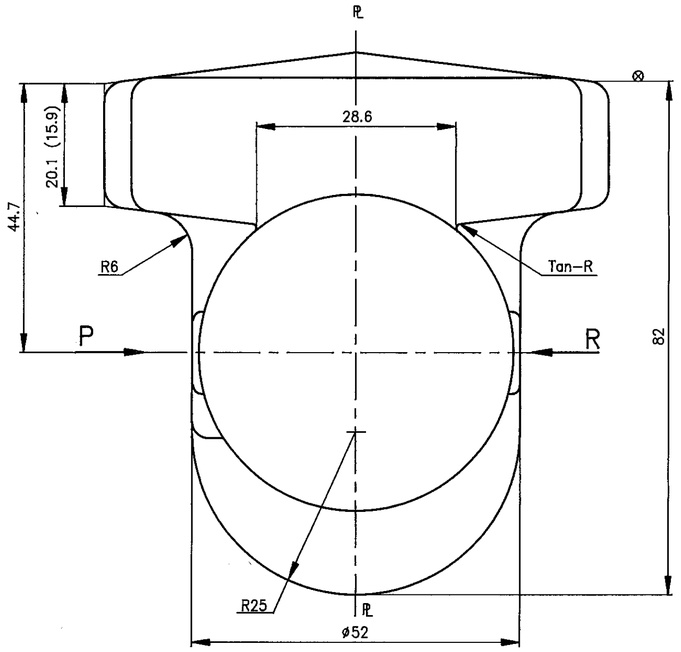

NOTES:

01. FORGING TOLERENCES
    - LENGTH AND HEIGHT TOLERANCE . . . . . : + 1.5 / − 0.7
    - THICKNESS TOLERANCE . . . . . : + 1.3 / − 0.7
    - FILLET AND EDGE RADII: mm / TOL. %: 0–10 / +50 − 25; 10–32 / +40 − 20; 32–100 / +32 − 15
02. MISMATCH . . . . . : 0.6
03. RESIDUAL FLASH . . . . . : 0.7
04. DRAFT . . . . . : 7° MAX.
05. UNSPECIFIED FORGING RADII R2.5
06. FORGING SHALL COMPLY WITH THE REQUIREMENTS OF APPLICABLE TDC.
07. DIMENSIONS IN THE DRAWING EXCLUDE FORGING DRAFT.
08. MACHINING ALLOWANCES ARE INCLUDED ON ALL MACHINABLE SURFACES MARKED ⊗
09. FINISH MACHINED DIMENSIONS ARE INDICATED WITHIN BRACKETS FOR INFORMATION.
10. FORINGS ARE TO BE SAND BLASTED OR SHOT BLASTED AND HEAT TREATED AS SPECIFIED.
11. THE IDENTIFICATION MARKS AND SPECIFICATION NUMBERS SHALL BE IN RAISED LETTERS.
12. SIZE OF FORGING LETTERS : 5 mm
13. HEIGHT OF PADS – 2 mm

VIEW–P

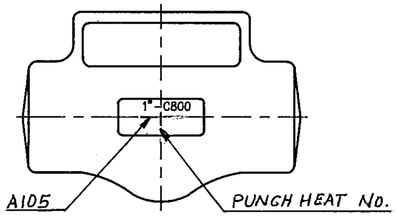

VIEW–R

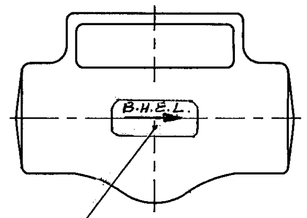

SUPPLIER'S CODE

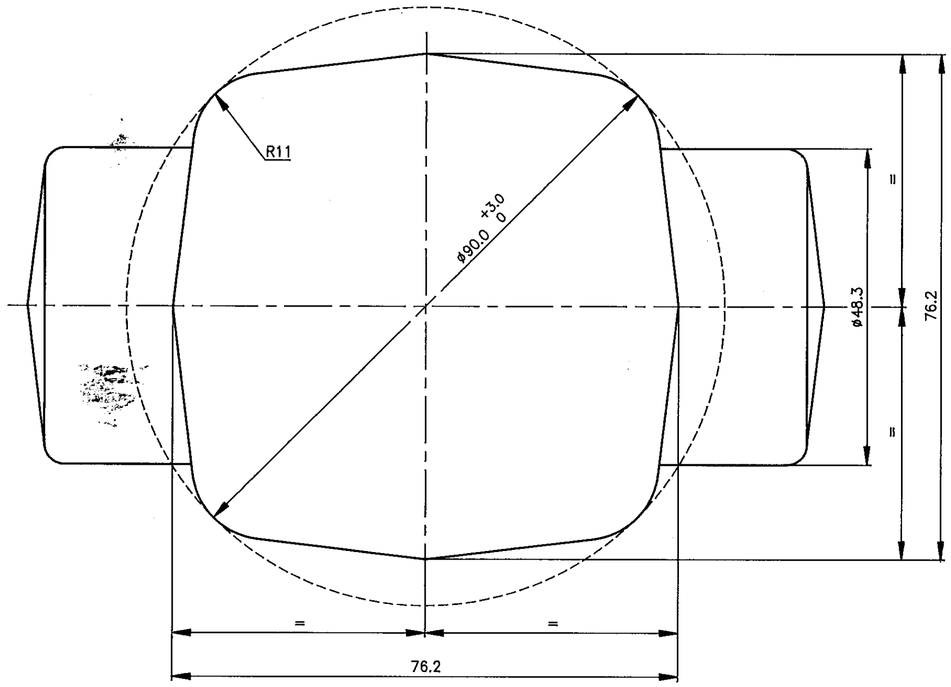

RETRACED WITH REV. 05 ON 29.1.97

No OFF	DESCRIPTION	MATL CODE	MATL SPECN	HEAT TREATMENT	SCRAP SORT	NET WT (kg)	GROSS WT (kg)	DRAWING No	ITEM No
–	DIE FORGING	92 024 543	ASTM A105 ATTEST	NORMALISED	–	2.54	–	–	–

TYPE OF PRODUCT
OR NAME OF
CUSTOMER/PROJECT

BHARAT HEAVY ELECTRICALS LTD.,
UNIT: HIGH PRESSURE BOILER PLANT.
TIRUCHIRAPALLI-620014.

	NAME	SIGN	DATE	NO.OF VAR.
DRN	R.MOHAN	R. Mohan	21.06.95	
CHD	K.S.RAMAN		22.6.95	
APPD	N.NAGARAJAN		23.6.95	

DEPT	CODE	SCALE	WEIGHT (KG).	REFERENCE INFORMATIONS	NO. OF ITEMS
V L	320	NTS	2.54	COMP. CODE: 920245430000 CAD No. :F202477F	

TITLE	CARD CODE	DRAWING NO.	REV
BODY (1" – C800 –A105)	U 01	2–V–5904–02477F	05

REV	DATE	ALTERED
05	29.01.97	CHD & APPD

ZONE: QUALITY REFERENCE REMOVED. REFER DCN. FS:0572

CAUTION: The information on this document is the property of BHARAT HEAVY ELECTRICALS LTD. It must not be used directly or indirectly in any way detrimental to the interest of the company.

Size A2

TP-DG-2-V-5904-02477F
CORPORATE DRG ID