DRAWING NO. 2-V-5717-02691F

ALL DIMENSIONS ARE IN MILLIMETRES. FOR TOLERANCES OF UNTOLERANCED DIMENSIONS DURING MANUFACTURE REFER RELEVANT QCP / QP

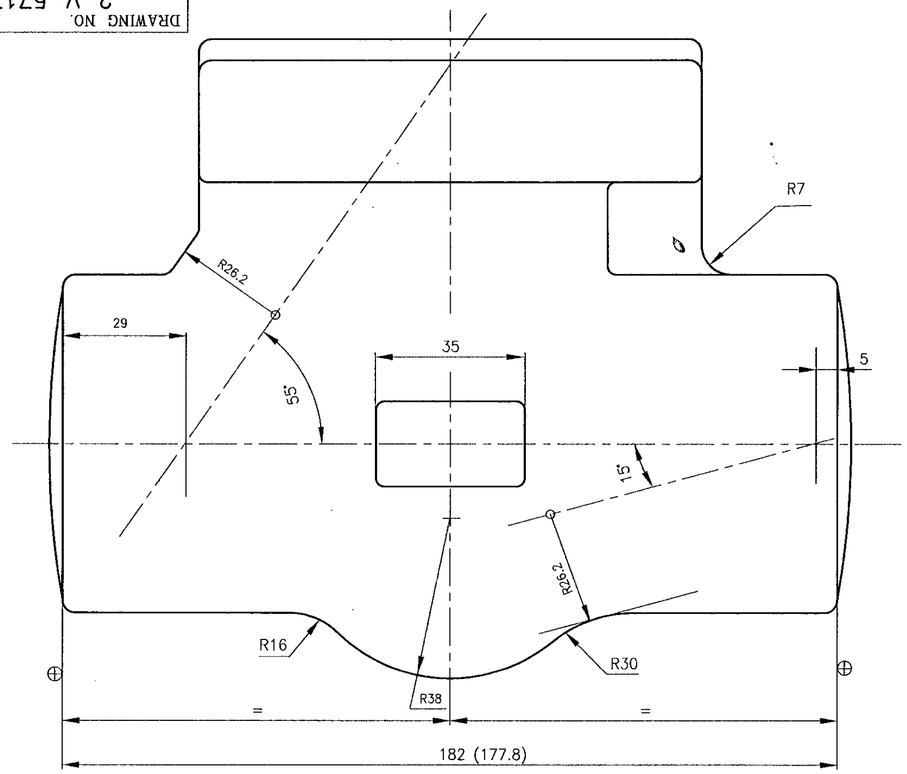

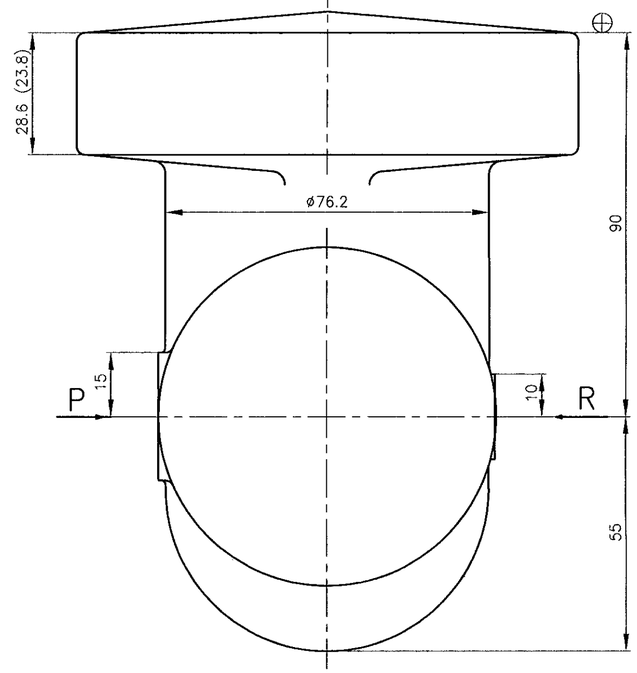

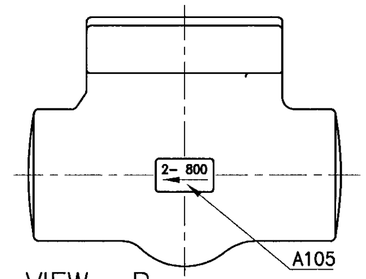

VIEW- R

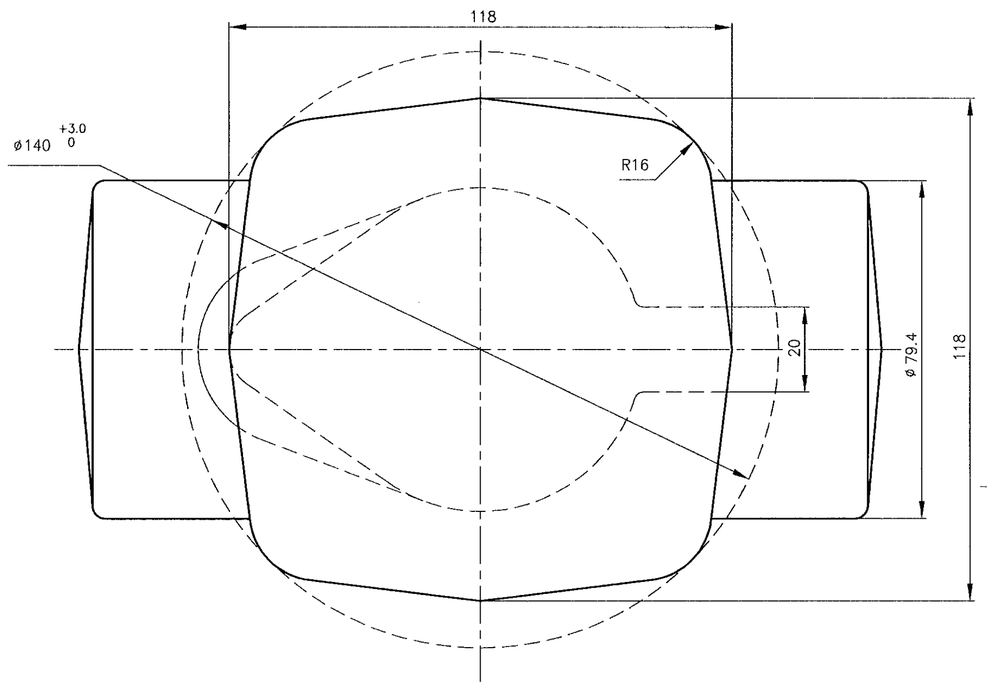

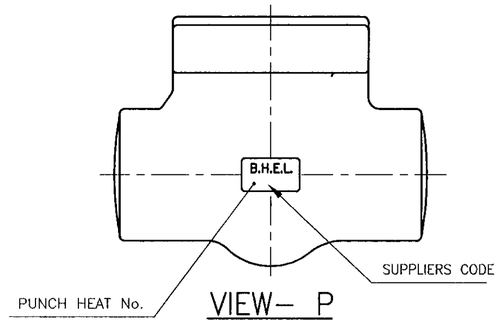

VIEW- P

NOTES:

01. FORGING TOLERENCES
    - LENGTH AND HEIGHT TOLERANCE . . . . . : [+ 2.4, − 1.2]
    - THICKNESS TOLERANCE . . . . . : [+ 2.1, − 1.1]

FILLET AND EDGE RADII	mm	TOL. %
	0–10	+50–25
	10–32	+40–20
	32–100	+32–15

02. MISMATCH . . . . . : 1.2
03. RESIDUAL FLASH . . . . . : 1.4
04. DRAFT . . . . . : 7°
05. UNSPECIFIED FORGING RADII R 2.5
06. FORGING SHALL COMPLY WITH THE REQUIREMENTS OF APPLICABLE TDC.
07. DIMENSIONS IN THE DRAWING EXCLUDE FORGING DRAFT
08. MACHINING ALLOWANCES ARE INCLUDED ON ALL MACHINABLE SURFACES MARKED ⊕
09. FINISH MACHINED DIMENSIONS ARE INDICATED WITHIN BRACKETS FOR INFORMATION
10. FORINGS ARE TO BE SAND BLASTED OR SHOT BLASTED AND HEAT TREATED AS SPECIFIED
11. THE IDENTIFICATION MARKS AND SPECIFICATION NUMBERS SHALL BE IN RAISED LETTERS
12. SIZE OF FORGING LETTERS : 5 mm
13. HEIGHT OF PADS – 2 mm

DRAWING RETRACED WITH REV. 03 ON 16.09.2000

No OFF	DESCRIPTION	MATL CODE	MATL SPECN	HEAT TREATMENT	SCRAP SORT	NET WT (kg)	GROSS WT (kg)	DRAWING No	ITEM No
–	FORGING	92 024 545	ASTM A105 ATTESTED	NORMALISED	–	9.64	–	–	006

TYPE OF PRODUCT
OR NAME OF
CUSTOMER/PROJECT

BHARAT HEAVY ELECTRICALS LTD.,
UNIT: HIGH PRESSURE BOILER PLANT.
TIRUCHIRAPALLI-620014.
365–120

	NAME	SIGN	DATE	NO. OF VAR.
DRN	M.SRINIVASAN		16.09.2K	
CHD	P.BOOMINATHAN		16.09.2K	
APPD	K.S.RAMAN		16.09.2K	

DEPT	CODE	SCALE	WEIGHT (KG).	REFERENCE INFORMATIONS	NO. OF ITEMS
V L	320	NTS	9.64	COMP. CODE: 92 024 545 0000 CAD: F202691F	

TITLE	CARD CODE	DRAWING NO.	REV
BODY	U 01	2-V-5717-02691F	03

REV	DATE	ALTERED
03	29.1.97	CHD & APPD

ZONE: DCN: FS 05572
QUALITY REFERENCES REMOVED

CAUTION: The information on this document is the property of BHARAT HEAVY ELECTRICALS LTD. It must not be used directly or indirectly in any way detrimental to the interest of the company.

Size A2