DRAWING NO. 2-V-5737-02537F

ALL DIMENSIONS ARE IN MILLIMETRES. FOR TOLERANCES OF UNTOLERANCED DIMENSIONS DURING MANUFACTURE REFER RELEVANT QCP / QP

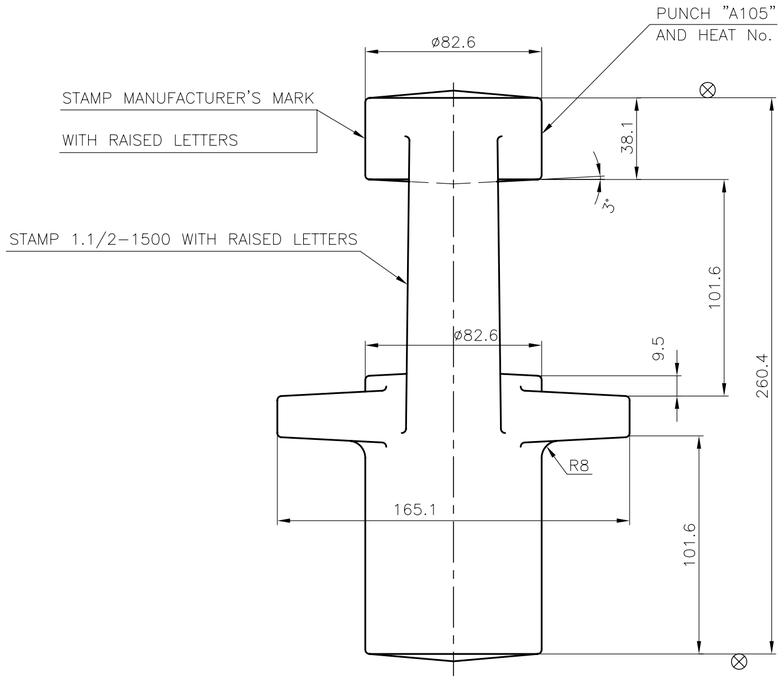

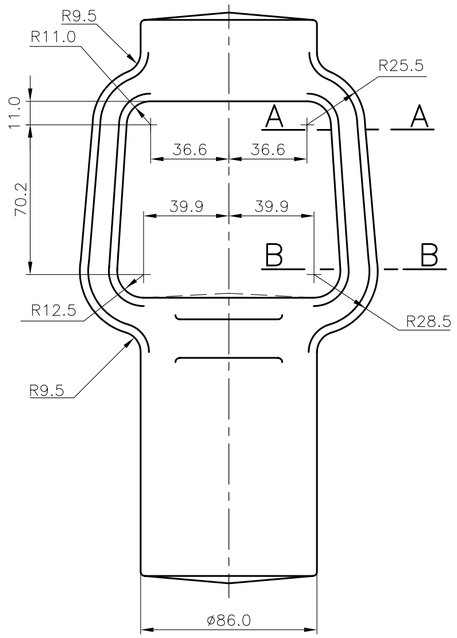

NOTES:

FORGING TOLERANCES

1.LENGTH AND WIDTH TOLERANCES +3.0 −1.5

THICKNESS TOLERANCES +2.7 −1.2

2.MISMATCH 1.0

3.UNSPECIFED DRAFT : 7°(MAX)

4.UNSPECIFIED FORGING RADII R3

5.FORGING SHALL COMPLY WITH REQUIREMENTS OF LATEST APPLICABLE QUALITY PROCEDURE.

6.MACHINING ALLOWANCES ARE INCLUDED ON ALL MACHINABLE SURFACES MARKED ⊗

7.FORGINGS ARE TO BE SAND BLASTED OR SHOT BLASTED

8.SIZE OF FORGING LETTERS 10MM

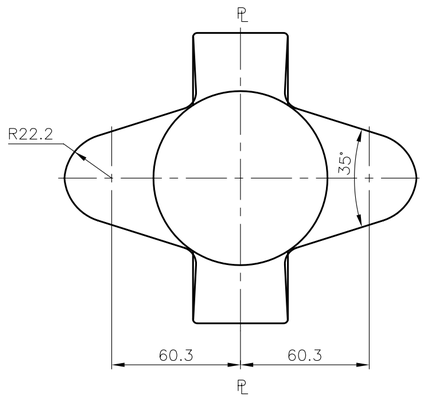

SECTION-AA

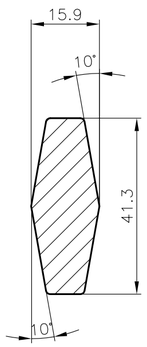

SECTION-BB

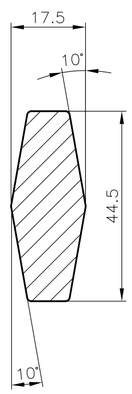

No OFF	DESCRIPTION	MATL CODE	MATL SPECN	HEAT TREATMENT	SCRAP SORT	NET WT (kg)	GROSS WT (kg)	DRAWING No	ITEM No
01	DIE FORGING	92 008 330	ASME SA105 CERTIFY	NORMALISED & TEMPERED	–	8.7	–	–	–

TYPE OF PRODUCT
OR NAME OF
CUSTOMER/PROJECT

BHARAT HEAVY ELECTRICALS LTD.,
UNIT: HIGH PRESSURE BOILER PLANT.
TIRUCHIRAPALLI-620014.
365-120

	NAME	SIGN	DATE	NO.OF VAR.
DRN	T.RAJARAMAN		24.08.79	
CHD	S.S.MANIAN		24.08.79	
APPD	G.V.RAMANI		24.08.79	

DEPT	SCALE	WEIGHT (KG).	REFERENCE INFORMATIONS	NO. OF ITEMS
V L	NTS	8.7	CAD:F202537F	
CODE 320				

TITLE	CARD CODE	DRAWING NO.	REV
YOKE	U 01	2-V-5737-02537F	03

REV	DATE	ALTERED	
03	31.03.08	CHD & APPD	M.SRINIVASAN P.BOOMINATHAN

ZONE DCP:800814

DRAWING CONVERTED INTO AUTOCAD.

CAUTION: The information on this document is the property of BHARAT HEAVY ELECTRICALS LTD. It must not be used directly or indirectly in any way detrimental to the interest of the company.

Size A2