DRAWING NO. 2-V-0000-05533F

ALL DIMENSIONS ARE IN MILLIMETRES. FOR TOLERANCES OF UNTOLERANCED DIMENSIONS DURING MANUFACTURE REFER RELEVANT QCP / QP

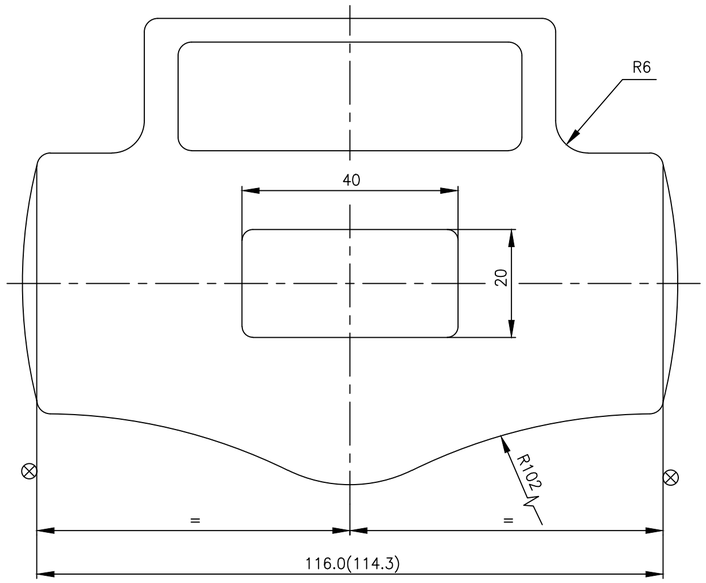

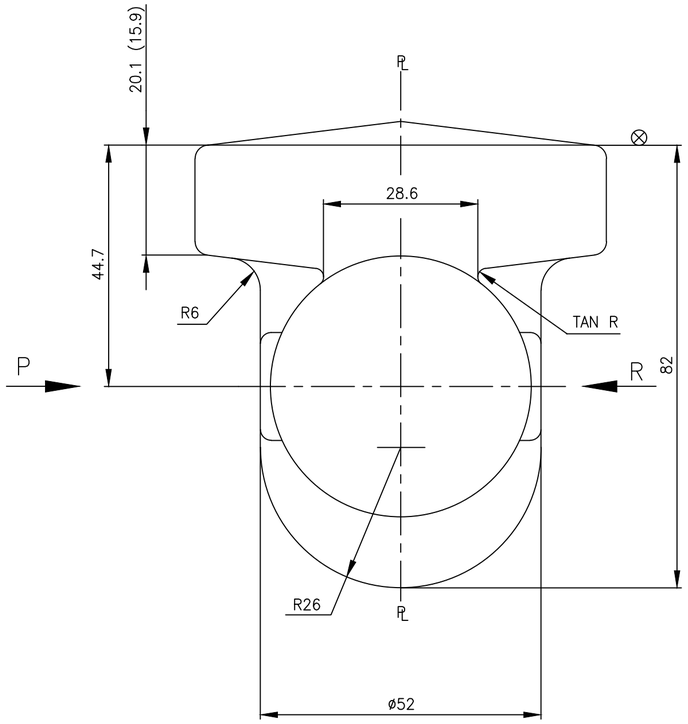

NOTES:

01. FORGING TOLERENCES
    - LENGTH AND HEIGHT TOLERANCE . . . . . : [+ 1.5 / − 0.7]
    - THICKNESS TOLERANCE . . . . . : [+ 1.3 / − 0.7]

FILLET AND EDGE RADII	mm	TOL. %
	0–10	+50–25
	10–32	+40–20
	32–100	+32–15

02. MISMATCH . . . . : 0.6
03. RESIDUAL FLASH . . . .: 0.7
04. DRAFT . . . .: 7° (MAX)
05. UNLESS OTHERWISE STATED TOLERENCES SHALL CONFORM TO BS : 4114 NORMAL
06. UNSPECIFIED FORGING RADII R 2.5
07. FORGING SHALL COMPLY WITH THE REQUIREMENTS OF APPLICABLE TDC.
08. DIMENSIONS IN THE DRAWING EXCLUDE FORGING DRAFT
09. MACHINING ALLOWANCES ARE INCLUDED ON ALL MACHINABLE SURFACES MARKED ⊗
10. FINISH MACHINED DIMENSIONS ARE INDICATED WITHIN BRACKETS FOR INFORMATION
11. FORINGS ARE TO BE SAND BLASTED OR SHOT BLASTED AND HEAT TREATED AS SPECIFIED
12. THE IDENTIFICATION MARKS AND SPECIFICATION NUMBERS SHALL BE IN RAISED LETTERS
13. SIZE OF FORGING LETTERS : 5 mm
14. HEIGHT OF PADS – 2 mm
15. # MARKED ITEMS IGC TEST SHALL BE CONDUCTED.

THIS DRAWING IS DIMENSIONALLY IDENTICAL TO DRAWING NO. 2–V–5934–02477F (TABULATED DRAWING) WHICH WAS APPROVED BY CIB.
THIS DRAWING IS MADE AS INDIVIDUAL DRAWING BASED ON THE DIRECTION GIVEN BY CIB.

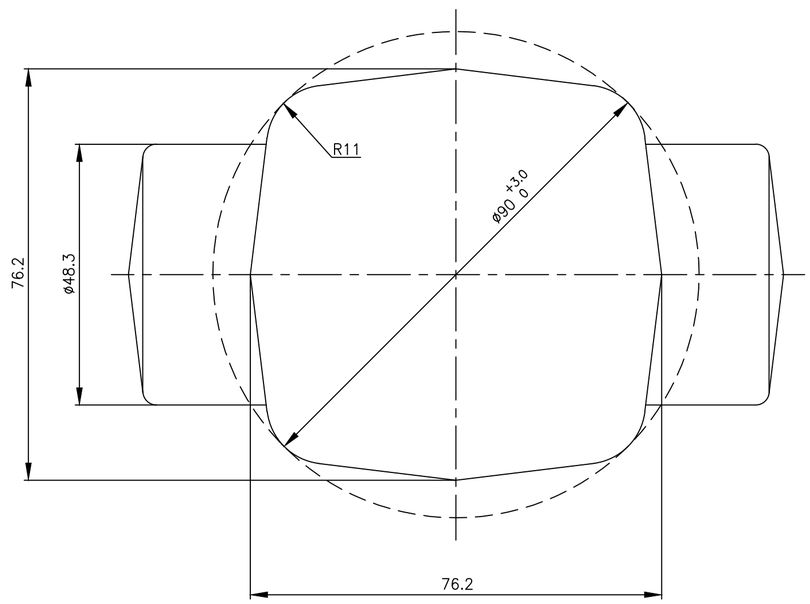

VIEW–P

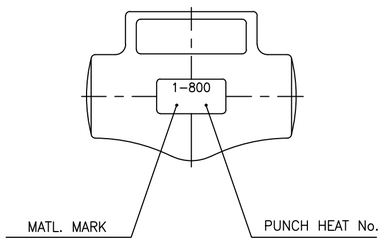

VIEW–R

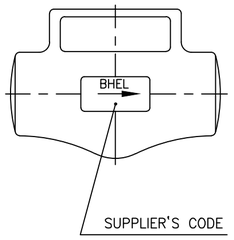

MATL MARK	SL No.	DESCRIPTION	MATL CODE	MATL SPECN	HEAT TREATMENT	SCRAP SORT	NET WT (kg)	GROSS WT (kg)	DRAWING No	ITEM No
F316	#04	DIE FORGING	92502138	SA A182 F316–ATTEST	SOLUTION ANNEALED	46	2.52	–	2–V–U782–05533F	001
F51	03	DIE FORGING	92502073	SA 182 F51–ATTEST	SOLUTION ANNEALED	46	2.52	–	2–V–HL80–05533F	001
F304L	02	DIE FORGING	92502058	SA 182 F304L–ATTEST	SOLUTION ANNEALED	46	2.52	–	2–V–HL69–05533F	001
F316	01	DIE FORGING	92024720	SA 182 F316–ATTEST	SOLUTION ANNEALED	46	2.52	–	2–V–5934–05533F	001

REV	DATE	ALTERED	REV	DATE	ALTERED	REV	DATE	ALTERED
03	11.10.18	MADHURAM / CHD &APPD MADHURAM & KRS	02	16.11.16	KRP / CHD & APPD KRP & KRS	01	16.06.16	DRS / CHD & APPD DRS & KRS
		Sl.no.04 included. Note no.15 included	ZONE		Sl.No.03 included	ZONE		Sl.No.02 included

CAUTION: The information on this document is the property of BHARAT HEAVY ELECTRICALS LTD. It must not be used directly or indirectly in any way detrimental to the interest of the company.

TYPE OF PRODUCT
OR NAME OF
CUSTOMER/PROJECT

BHARAT HEAVY ELECTRICALS LTD.,
UNIT: HIGH PRESSURE BOILER PLANT.
TIRUCHIRAPALLI -620014.
365–120

	NAME	SIGN	DATE	NO.OF VAR.
DRN	M.SRINIVASAN		6.8.92	
CHD	N.P.ESWARAN		5.9.92	
APPD	N.NAGARAJAN		14.9.92	

DEPT	SCALE	WEIGHT (KG).	REFERENCE INFORMATIONS	NO. OF ITEMS
VL	NTS	2.52	B955FE01A/CL114 (035) CAD: F205533F	

CODE 320

TITLE: BODY

CARD CODE: U 01

DRAWING NO. 2–V–0000–05533F

REV 03

Size A2