DRAWING NO. 2-V-0000-05532F

ALL DIMENSIONS ARE IN MILLIMETRES

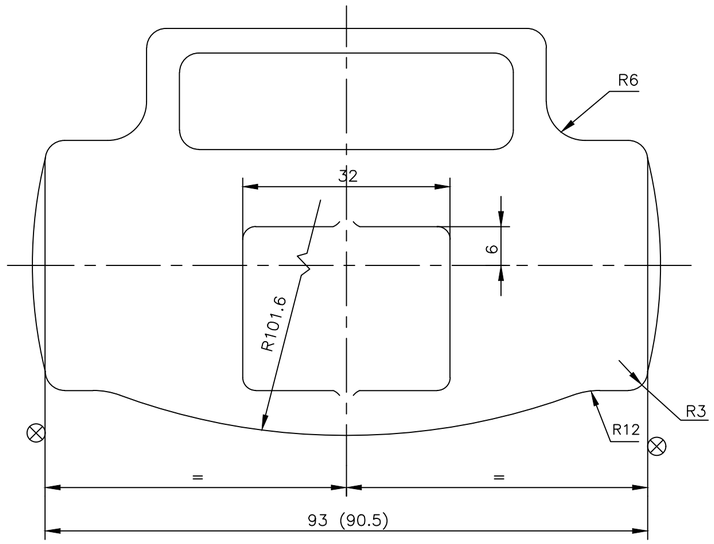

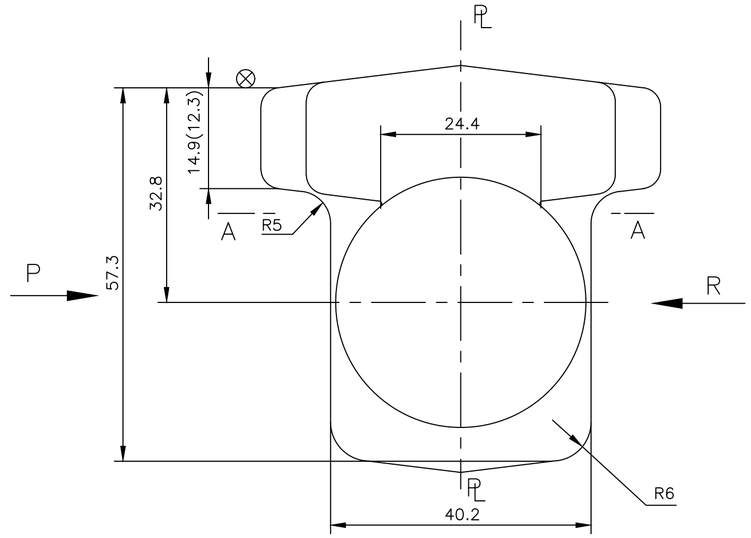

NOTES:

01. FORGING TOLERENCES
    - LENGTH AND HEIGHT TOLERANCE . . . . . : + 1.2 / − 0.6
    - THICKNESS TOLERANCE . . . . . : + 1.1 / − 0.5
    - FILLET AND EDGE RADII: 0–10 (mm) +50–25 (TOL. %); 10–32 +40–20; 32–100 +32–15
02. MISMATCH . . . . : 0.6
03. RESIDUAL FLASH . . . .: 0.7
04. DRAFT . . . .: 7° (MAX)
05. UNSPECIFIED FORGING RADII R 2.5
06. FORGING SHALL COMPLY WITH THE REQUIREMENTS OF APPLICABLE TDC.
07. DIMENSIONS IN THE DRAWING EXCLUDE FORGING DRAFT
08. MACHINING ALLOWANCES ARE INCLUDED ON ALL MACHINABLE SURFACES MARKED ⊕
09. FINISH MACHINED DIMENSIONS ARE INDICATED WITHIN BRACKETS FOR INFORMATION
10. FORINGS ARE TO BE SAND BLASTED OR SHOT BLASTED AND HEAT TREATED AS SPECIFIED
11. THE IDENTIFICATION MARKS AND SPECIFICATION NUMBERS SHALL BE IN RAISED LETTERS
12. SIZE OF FORGING LETTERS : 5 mm
13. HEIGHT OF PADS – 5 mm
14. # MARKED ITEMS IGC TEST SHALL BE CONDUCTED.

SECTION AA

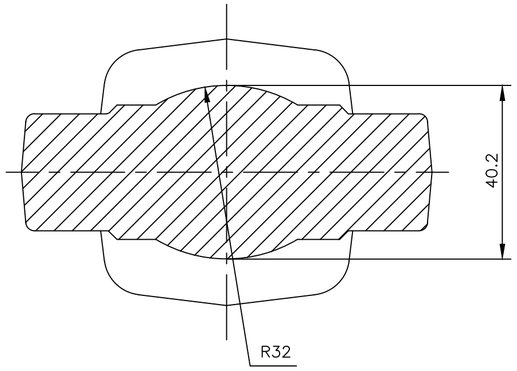

THIS DRAWING IS DIMENSIONALLY IDENTICAL TO DRAWING NO. 2-V-5903-02476F (TABULATED DRAWING) WHICH WAS APPROVED BY CIB.
THIS DRAWING IS MADE AS INDIVIDUAL DRAWING BASED ON THE DIRECTION GIVEN BY CIB.

VIEW–P

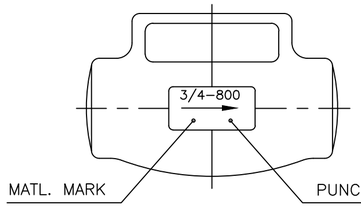

VIEW–R

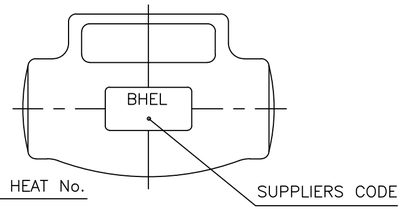

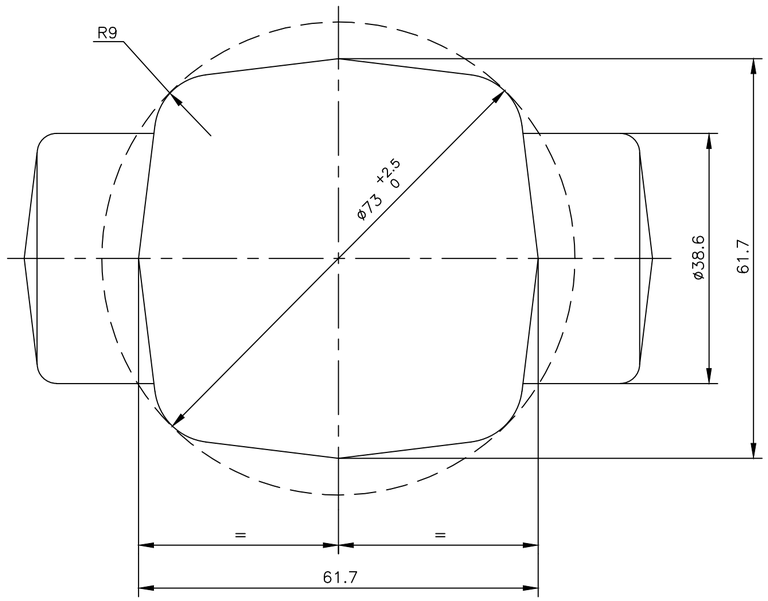

MATL MARK	SL.No.	DESCRIPTION	MATL CODE	MATL SPECN	HEAT TREATMENT	SCRAP SORT	NET WT (kg)	GROSS WT (kg)	DRAWING No	ITEM No
F316	#03	DIE FORGING	92502136	SA A182 F316 ATTEST	SOLUTION ANNEALED	46	1.3	–	2–V–U781–05532F	001
F304L	02	DIE FORGING	92502045	SA A182 F304L ATTEST	SOLUTION ANNEALED	46	1.3	–	2–V–HL62–05532F	001
F316	01	DIE FORGING	92024719	SA A182 F316 ATTEST	SOLUTION ANNEALED	46	1.3	–	2–V–5933–05532F	001

REV	DATE	ALTERED / CHECKED	ZONE	Remarks
03	11.10.18	ALTERED MADHURAM; CHD &APPD MADHURAM & KRS		Sl.no.03 included. Note no.14 included
02	07.10.16	ALTERED KRP; CHECKED KRP & KRS		Sl.No.01 Material Spec was corrected from SA A105 to SA A182 F316. DCP:802174
01	15.06.16	ALTERED DRS; CHECKED DRS & KRS		Sl.No.02 included

CAUTION: The information on this document is the property of BHARAT HEAVY ELECTRICALS LTD. It must not be used directly or indirectly in any way detrimental to the interest of the company.

TYPE OF PRODUCT
OR NAME OF
CUSTOMER/PROJECT

BHARAT HEAVY ELECTRICALS LTD.,
UNIT: HIGH PRESSURE BOILER PLANT.
TIRUCHIRAPALLI-620014.

	NAME	SIGN	DATE	NO.OF VAR.
DRN	R.MOHAN		06.08.92	
CHD	N.P.ESWARAN		08.09.92	
APPD	N.NAGARAJAN		14.09.92	

DEPT	SCALE	WEIGHT (KG).	REFERENCE INFORMATIONS	NO. OF ITEMS
VL	NTS			

CODE	TITLE	CARD CODE	DRAWING NO.	REV
320	BODY	U 01	2–V–0000–05532F	03

Size A2