DRAWING NO. 2-V-0000-05531F

ALL DIMENSIONS ARE IN MILLIMETRES. FOR TOLERANCES OF UNTOLERANCED DIMENSIONS DURING MANUFACTURE REFER RELEVANT QCP / QP

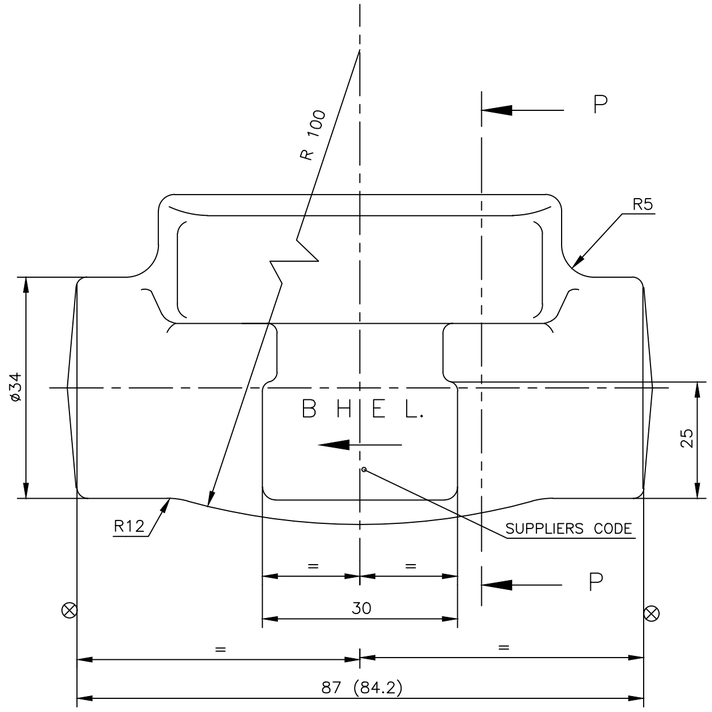

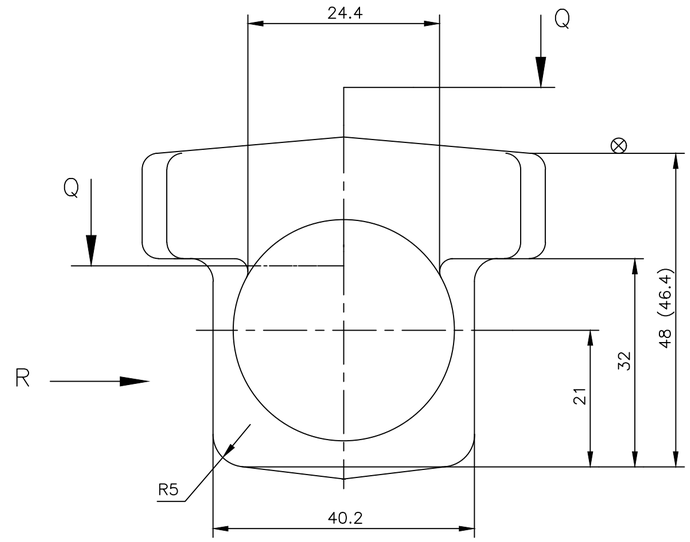

VIEW–R

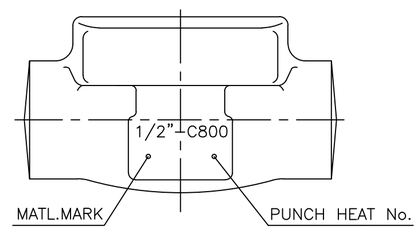

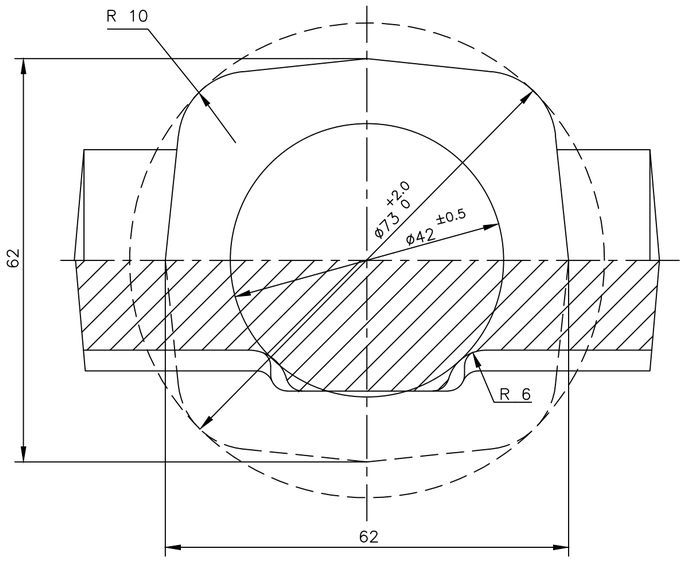

SECTION – QQ

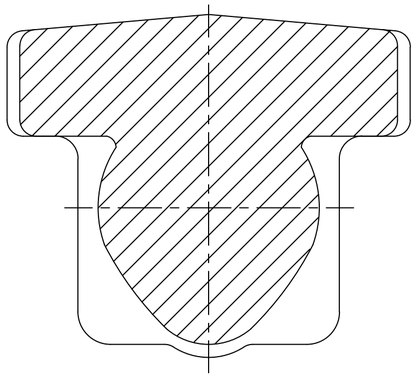

SECTION – PP

NOTES.

01. FORGING TOLERENCES
    - LENGTH AND HEIGHT TOLERANCE . . . . . : + 1.2 / – 0.6
    - THICKNESS TOLERANCE . . . . . : + 1.1 / – 0.5
    - FILLET AND EDGE RADII:

mm	TOL. %
0–10	+50–25
10–32	+40–20
32–100	+32–15

02. MISMATCH . . . . : 0.6
03. RESIDUAL FLASH . . . .: 0.7
04. DRAFT . . . .: 7°
05. UNSPECIFIED FORGING RADII R 2.5
06. FORGING SHALL COMPLY WITH THE REQUIREMENTS OF QUALITY PROCEDURE
07. DIMENSIONS IN THE DRAWING EXCLUDE FORGING DRAFT APPLICABLE
08. MACHINING ALLOWANCES ARE INCLUDED ON ALL MACHINABLE SURFACES MARKED ⊕
09. FINISH MACHINED DIMENSIONS ARE INDICATED WITHIN BRACKETS FOR INFORMATION
10. FORINGS ARE TO BE SAND BLASTED OR SHOT BLASTED AND HEAT TREATED AS SPECIFIED
11. THE IDENTIFICATION MARKS AND SPECIFICATION NUMBERS SHALL BE IN RAISED LETTERS
12. SIZE OF FORGING LETTERS : 5 mm
13. HEIGHT OF PADS = 2 mm
14. # MARKED ITEMS IGC TEST SHALL BE CONDUCTED.

MATL MARK	SL No.	DESCRIPTION	MATL CODE	MATL SPECN	HEAT TREATMENT	SCRAP SORT	NET WT (kg)	GROSS WT (kg)	DRAWING No	ITEM No
F316L	05	FORGING	92 502 198	SA 182 F316L–ATTEST	SOLUTION ANNEALED	46	1.00	–	2–V–HN35–05531F	001
F316	#04	FORGING	92 502 133	SA 182 F316–ATTEST	SOLUTION ANNEALED	46	1.00	–	2–V–U780–05531F	001
F51	03	FORGING	92 502 077	SA 182 F51–ATTEST	SOLUTION ANNEALED	46	1.00	–	2–V–HL90–05531F	001
F304L	02	FORGING	92 502 049	SA 182 F304L–ATTEST	SOLUTION ANNEALED	46	1.00	–	2–V–HL65–05531F	001
F316	01	FORGING	92 024 718	SA 182 F316–ATTEST	SOLUTION ANNEALED	46	1.00	–	2–V–5932–05531F	001

REV	DATE	ALTERED		REV	DATE	ALTERED		REV	DATE	ALTERED		REV	DATE	ALTERED	
04	30.03.19	MADHURAM CHD & APPD	MRP & KRS	03	07.04.18	MADHURAM CHD & APPD	MRP & KRS	02	26.09.17	MADHURAM CHD & APPD	RP & KRS	01	15.06.16	DRS CHD & APPD	DRS & KRS
ZONE	Sl.No.05 included.			ZONE	Sl.No.04 included. Note no. 14 included			ZONE	Sl.No.03 included.			ZONE	Sl.No.02 included.		

CAUTION: The information on this document is the property of BHARAT HEAVY ELECTRICALS LTD. It must not be used directly or indirectly in any way detrimental to the interest of the company.

TYPE OF PRODUCT
OR NAME OF
CUSTOMER/PROJECT

BHARAT HEAVY ELECTRICALS LTD.,
UNIT: HIGH PRESSURE BOILER PLANT.
TIRUCHIRAPALLI–620014.
365–120

	NAME	SIGN	DATE	NO.OF VAR.
DRN	M.SRINIVASAN		08.05.01	
CHD	P.BOOMINATHAN		08.05.01	
APPD	K.S.RAMAN		08.05.01	

DEPT: V L
CODE: 320
SCALE: NTS
WEIGHT (KG).: 1.00
REFERENCE INFORMATIONS
NO. OF ITEMS

TITLE: BODY
CARD CODE: U 01
DRAWING NO.: 2–V–0000–05531F
REV: 04

Size A2