DRAWING NO. 2-V-0000-02693F

ALL DIMENSIONS ARE IN MILLIMETRES. FOR TOLERANCES OF UNTOLERANCED DIMENSIONS DURING MANUFACTURE REFER RELEVANT QCP / QP

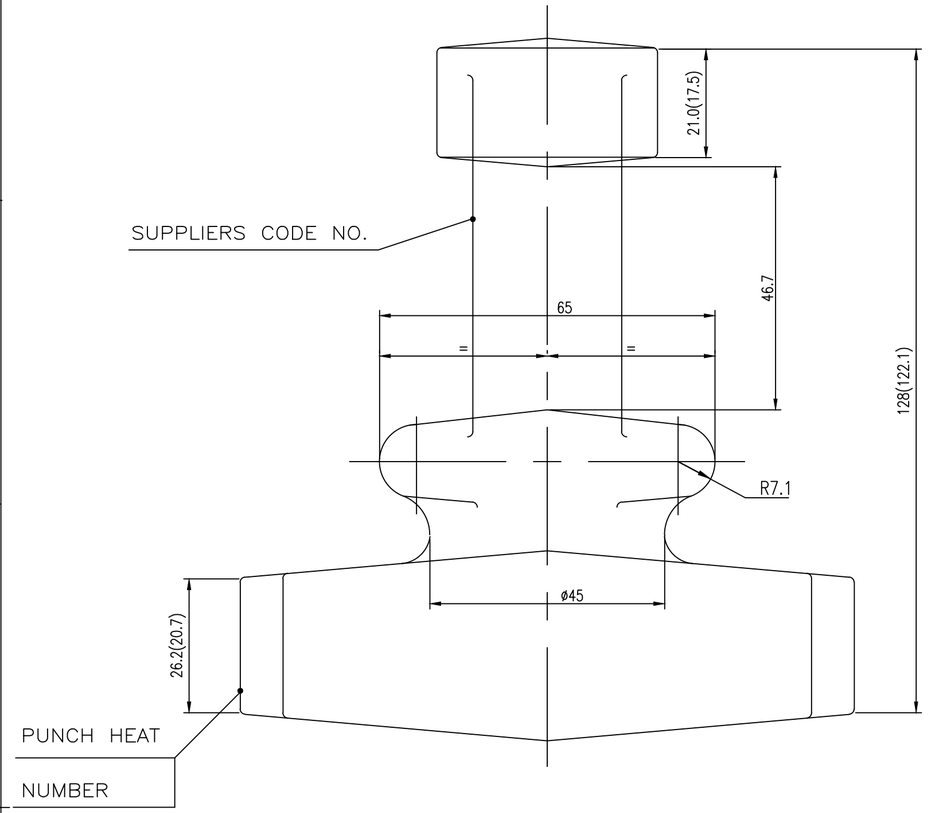

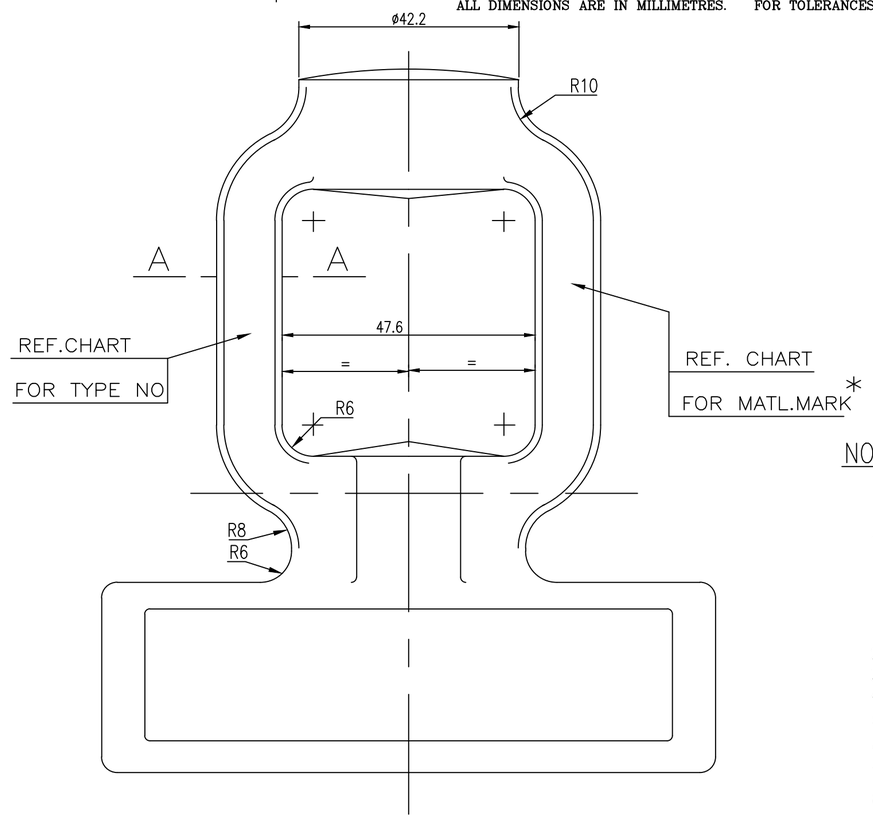

NOTES:

1. FORGING TOLERANCE

				MM	TOL%
LENGTH AND HEIGHT TOLERANCE	+1.9 −0.9		FILLET AND EDGE RADII	0−10	+50−25
THICKNESS TOLERANCE	+1.9 −0.9			10−32	+40−20
				32−100	+32−15

2. MISMATCH −0.8
3. RESIDUAL FLASH −1mm
4. DRAFT −7°
5. UNSPECIFIED FORGING RADII R2.5
6. FORGING SHALL COMPLY WITH THE REQUIREMENTS OF APPLICABLE TDC
7. DIMENSIONS IN THE DRAWING EXCLUDE FORGING DRAFT
8. MACHINING ALLOWANCES ARE INCLUDED IN ALL MACHINABLE SURFACES MARKED ⊗
9. FINISH MACHINED DIMENSION ARE INDICATED WITHIN BRACKETS FOR INFORMATION ONLY
10. FORGINGS ARE TO BE SAND BLASTED OR SHOT SLASTED AND HEAT TREATED AS SPECIFIED
11. THE MATERIAL SPECIFICATION TYPE NO .AND SUPPLIER'S CODE SHALL BE IN RAISED LETTERS
12. SIZE OF FORGING LETTERS 5MM
13. # MARKED ITEMS IGC TEST SHALL BE CONDUCTED.

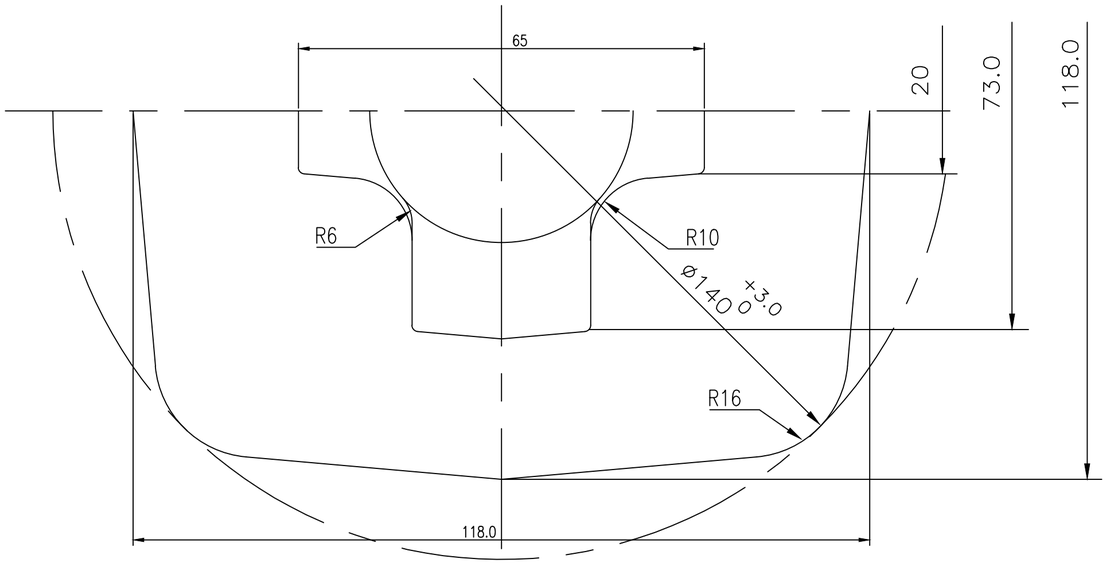

SECTION–AA

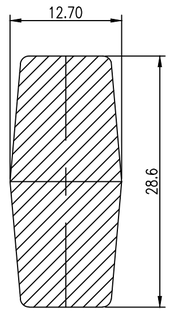

MATL MARK	No OFF	DESCRIPTION	MATL CODE	MATL SPECN	HEAT TREATMENT	SCRAP SORT	NET WT (kg)	GROSS WT (kg)	DRAWING No	ITEM No
F51	05	DIE FORGING	92502096	ASTM- A182 F51-CERTIFY	SOLUTION ANNEALED		2.60	–	2.V.HL91.02693F/02	001
F316	#04	DIE FORGING	92502167	ASTM- A182 F316-CERTIFY	SOLUTION ANNEALED		2.60	–	2.V.U792.02693F	001
F304	03.	DIE FORGING	92008397	ASTM- A182 F304-CERTIFY	SOLUTION ANNEALED		2.60	–	2.V.5981.02693F/02	001
F316	02.	DIE FORGING	92008391	ASTM- A182 F316-CERTIFY	SOLUTION ANNEALED		2.60	–	2.V.5945.02693F/02	001
A-105	01.	DIE FORGING	92008304	ASTM -A105 CERTIFY	NORMALISED		2.60	–	2.V.5717.02693F/02	001

REV	DATE	ALTERED	S.MADHURAM
03	09.11.18	CHD & APPD	MRP & KRS

ZONE

SL NO. 04 INCLUDED
NOTE NO. 13 INCLUDED

CAUTION: The information on this document is the property of BHARAT HEAVY ELECTRICALS LTD. It must not be used directly or indirectly in any way detrimental to the interest of the company.

TYPE OF PRODUCT
OR NAME OF
CUSTOMER/PROJECT

DRAWING REDRAWN WITH REV-03 ON 09.11.18

BHARAT HEAVY ELECTRICALS LTD.,
UNIT: HIGH PRESSURE BOILER PLANT.
TIRUCHIRAPALLI-620014.
365-120

	NAME	SIGN	DATE	NO.OF VAR.
DRN	M.SRINIVASAN		16.07.05	
CHD	P.BOOMINATHAN		16.07.05	
APPD	K.S.RAMAN		16.07.05	

DEPT V L
CODE

SCALE N T S

WEIGHT (KG). 2.60

REFERENCE INFORMATIONS
YOKE
B5527FA02A/EN 522 (057)

NO. OF ITEMS

TITLE
YOKE
(2" C800)

CARD CODE U 01

DRAWING NO. 2-V-0000-02693F

REV 04

Size A2