DRAWING NO. 2-V-0000-02510F

ALL DIMENSIONS ARE IN MILLIMETRES. FOR TOLERANCES OF UNTOLERANCED DIMENSIONS DURING MANUFACTURE REFER RELEVANT QCP / QP

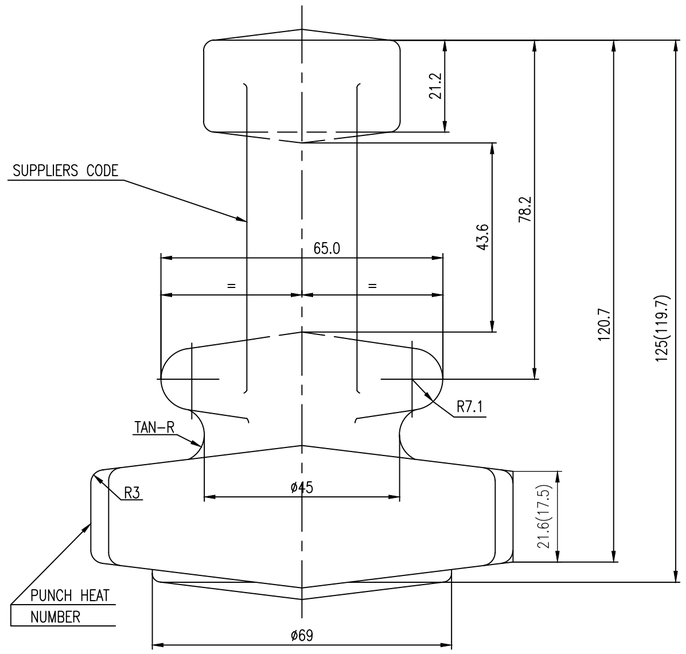

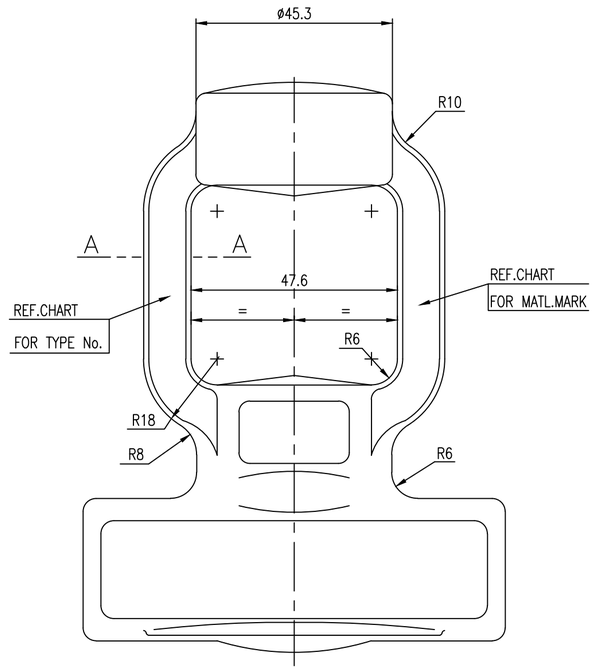

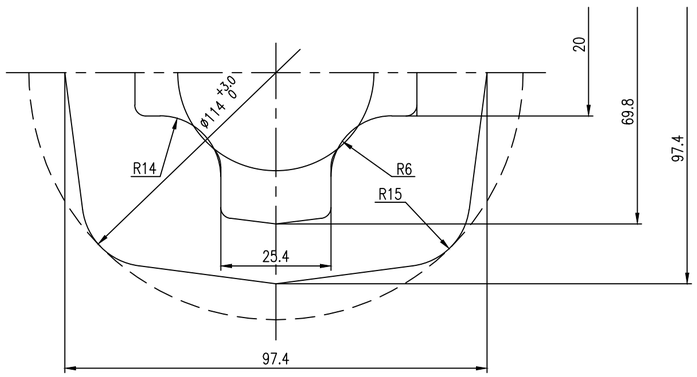

SECTION-AA

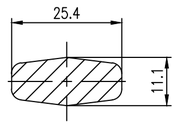

NOTES:

FORGING TOLERANCES

1. LENGTH AND HEIGHT TOLERANCES +1.7 −0.8
   THICKNESS TOLERANCES +1.5 −0.7
2. MISMATCH : 0.7
3. RESIDUAL FLASH : 0.8
4. DRAFT : 7°

FILLET AND EDGE RADII	mm	TOL%	
	0–10	+50	−25
	10–32	+40	−20
	32–100	+32	−15

5. UNLESS OTHERWISE STATED TOLERANCES SHALL CONFORM TO BS-4114 NORMAL.
6. UNSPECIFIED FORGING RADII R2.5
7. FORGING SHALL COMPLY WITH THE REQUIREMENTS OF APPLICABLE TDC.
8. DIMENSIONS IN THE DRAWING EXCLUDE FORGING DRAFT
9. MACHINING ALLOWANCES ARE INCLUDED ON ALL MACHINABLE SURFACES MARKED⊗
10. FINISH MACHINED DIMENSIONS ARE INDICATED WITH IN BRACKETS FOR INFORMATION
11. FORGING ARE TO BE SAND BLASTED OR SHOT BLASTED AND HEAT TREATED AS SPECIFIED
12. THE MATERIAL SPECIFICATION, TYPE NUMBER, SUPPLIERS CODE SHALL BE IN RAISED LETTERS.
13. SIZE OF FORGING LETTERS 5mm
14. # MARKED ITEMS IGC TEST SHALL BE CONDUCTED.

SL No.	PROCESS	DRAWING No	MATL CODE	MATL SPECN	HEAT TREATMENT	MATL MARK	TYPE No
#06	DIE FORGING	2.V.U791.02510F	92502166	ASTM-A182 F316 CERTIFY	SOLUTION ANNEALED	F316	U791
05	DIE FORGING	2.V.HL71.02510F	92502056	ASTM-A182 F304L CERTIFY	SOLUTION ANNEALED	F304L	HL71
04	DIE FORGING	2.V.5564.02510F/03	92008482	ASTM-A350 LF2 CERTIFY	NORMALISED & TEMPERED	LF2	5564
03	DIE FORGING	2.V.5973.02510F/03	92008396	ASTM-A182 F-304 CERTIFY	SOLUTION ANNEALED	F304	5973
02	DIE FORGING	2.V.5937.02510F/03	92008390	ASTM-A182 F316 CERTIFY	SOLUTION ANNEALED	F316	5937
01	DIE FORGING	2.V.5907.02510F/03	92008303	ASTM-A105 CERTIFY	NORMALISED	A105	5907

REV	DATE	ALTERED	S.MADHURAM
06	09.11.18	CHD & APPD	MRP & KRS

ZONE

SL NO. 06 INCLUDED
NOTE NO. 14 INCLUDED

CAUTION: The information on this document is the property of BHARAT HEAVY ELECTRICALS LTD. It must not be used directly or indirectly in any way detrimental to the interest of the company.

TYPE OF PRODUCT OR NAME OF CUSTOMER/PROJECT

DRAWING REDRAWN WITH REV 06 ON 09.11.18

BHARAT HEAVY ELECTRICALS LTD.,
UNIT: HIGH PRESSURE BOILER PLANT.
TIRUCHIRAPALLI-620014.
365-120

	NAME	SIGN	DATE	NO.OF VAR.
DRN	RCS		25.4.80	
CHD	P.BOOMINATHAN		25.4.80	
APPD	K.S.RAMAN		25.4.80	

DEPT	SCALE	WEIGHT (KG).	REFERENCE INFORMATIONS	NO. OF ITEMS
VL	NTS	2.2	YOKE B-958FE02A/EH472(042)	

CODE 320

TITLE	CARD CODE	DRAWING NO.	REV
YOKE 2"-C800	U 01	2-V-0000-02510F	06

DCN: 802186

CORPORATE DRG ID:TP-DG-2-V-0000-02510F(

Size A2