DRAWING NO. 2-V-0000-02509F

ALL DIMENSIONS ARE IN MILLIMETRES. FOR TOLERANCES OF UNTOLERANCED DIMENSIONS DURING MANUFACTURE REFER RELEVANT QCP / QP

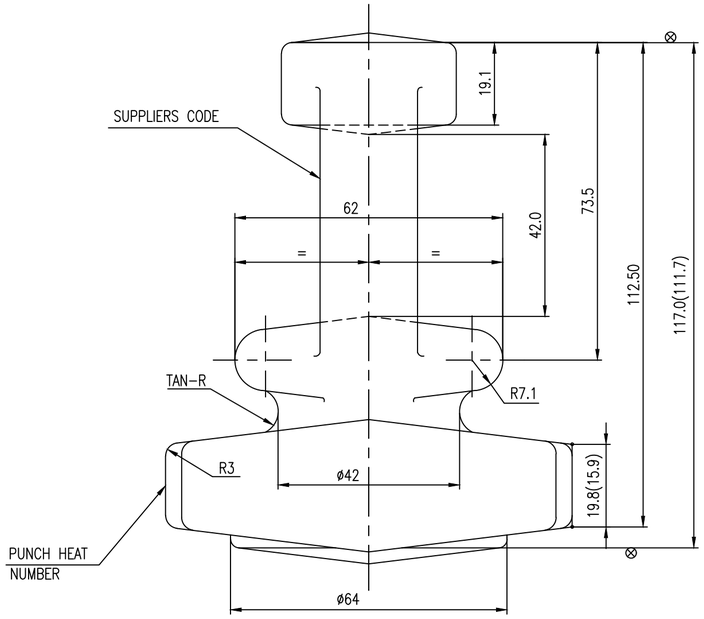

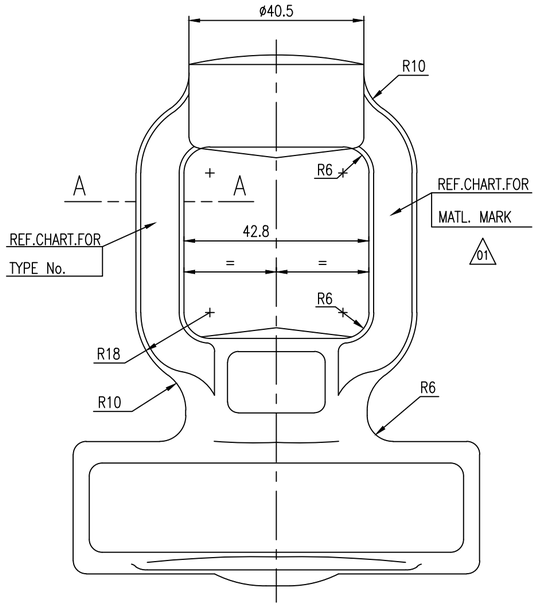

NOTES:

1.LENGTH AND HEIGHT TOLERANCES +1.7 −0.8

THICKNESS TOLERANCES +1.7 −0.8

2.MISMATCH : 0.7

3.RESIDUAL FLASH : 0.8

4.DRAFT : 7°

FILLET AND EDGE RADII	mm	TOL%	
	0–10	+50	−25
	10–32	+40	−20
	32–100	+32	−15

5.UNLESS OTHERWISE STATED TOLERANCES SHALL CONFORM TO BS-4114 NORMAL.

6.UNSPECIFIED FORGING RADII R2.5

7.FORGING SHALL COMPLY WITH THE REQUIREMENTS OF APPLICABLE TDC.

8.DIMENSIONS IN THE DRAWING EXCLUDE FORGING DRAFT

9.MACHINING ALLOWANCES ARE INCLUDED ON ALL MACHINABLE SURFACES MARKED⊗

10.FINISH MACHINED DIMENSIONS ARE INDICATED WITH IN BRACKETS FOR INFORMATION

11.FORGING ARE TO BE SAND BLASTED OR SHOT BLASTED AND HEAT TREATED AS SPECIFIED

12.THE MATERIAL SPECIFICATION, TYPE NUMBER, SUPPLIERS CODE SHALL BE IN RAISED LETTERS.

13.SIZE OF FORGING LETTERS 5mm

14. # MARKED ITEMS IGC TEST SHALL BE CONDUCTED.

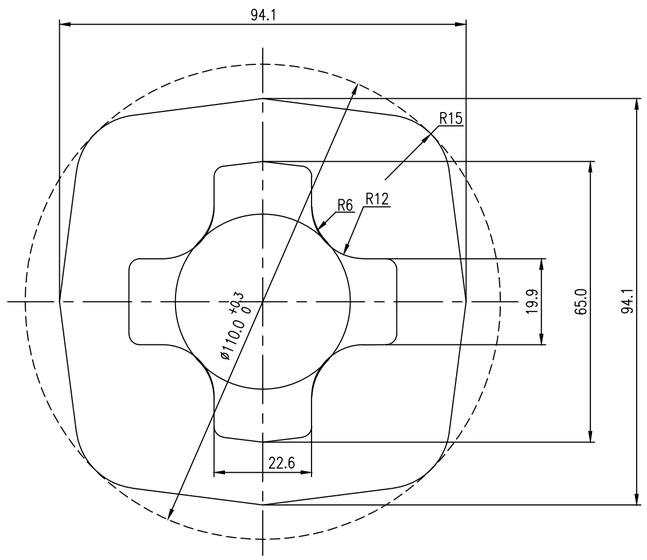

SECTION-AA

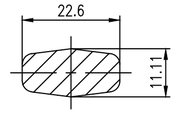

SL.No.	PROCESS	DRAWING No	MATL CODE	MATL SPECN	HEAT TREATMENT	MATL MARK	TYPE No
#05	DIE FORGING	2.V.U783.02509F/00	92502142	ASTM-A182 F316 CERTIFY	SOLUTION ANNEALED	F316	U783
04	DIE FORGING	2.V.HL70.02509F/00	92502055	ASTM-A182 F304L CERTIFY	SOLUTION ANNEALED	F304L	HL70
03	DIE FORGING	2.V.5972.02509F/02	92008395	ASTM-A182 F304 CERTIFY	SOLUTION ANNEALED	F304	5972
02	DIE FORGING	2.V.5936.02509F/02	92008389	ASTM-A182 F316 CERTIFY	SOLUTION ANNEALED	F316	5936
01	DIE FORGING	2.V.5906.02509F/02	92008309	ASTM-A105 CERTIFY	NORMALISED	A105	5906

CAUTION: The information on this document is the property of BHARAT HEAVY ELECTRICALS LTD. It must not be used directly or indirectly in any way detrimental to the interest of the company.

TYPE OF PRODUCT
OR NAME OF
CUSTOMER/PROJECT

BHARAT HEAVY ELECTRICALS LTD.,
UNIT: HIGH PRESSURE BOILER PLANT.
TIRUCHIRAPALLI-620014.
365-120

	NAME	SIGN	DATE	NO.OF VAR.
DRN	RCS		25.4.80	
CHD	P.BOOMINATHAN		25.4.80	
APPD	K.S.RAMAN		25.4.80	

DEPT	SCALE	WEIGHT (KG).	REFERENCE INFORMATIONS	NO. OF ITEMS
V L	NTS	1.90		
CODE 320				

TITLE	CARD CODE	DRAWING NO.	REV
YOKE 1.1/2"-C800-GV GATE VALVE	U 01	2-V-0000-02509F	04

REV	DATE	ALTERED	REV	DATE	ALTERED	REV	DATE	ALTERED	REV	DATE	ALTERED
04	11.10.18	MADHURAM CHD &APPD MADHURAM & KRS	03	17.06.16	DRS CHD & APPD DRS & KRS	02	29.1.97	CHD & APPD	01	19.6.83	CHD & APPD
		SL.No.05 included. Note no.14 included			F304L Matl. included	DCN : FS 0572		QUALITY REFERANCES REMOVED.	ZONE		F-316 F-304 MATL. INTRODUCED. DRG. NO. 2.V.0000.02509F WAS 2.V.5906.02509F

Size A2