DRAWING NO 2-V-0000-02507F

ALL DIMENSIONS ARE IN MILLIMETRES. FOR TOLERANCES OF UNTOLERANCED DIMENSIONS DURING MANUFACTURE REFER RELEVANT QCP / QP

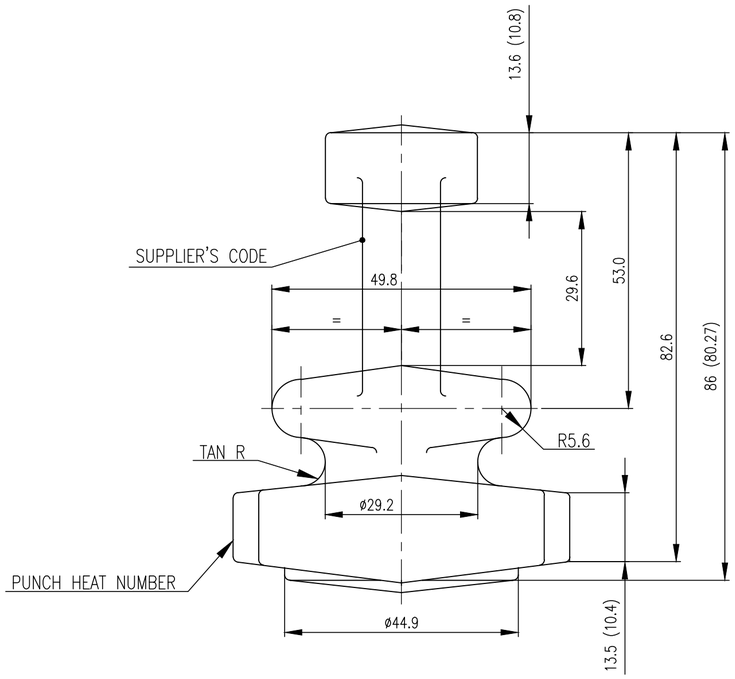

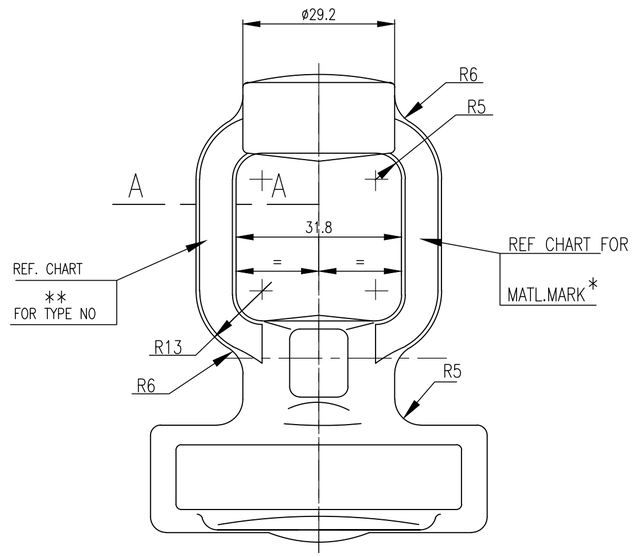

NOTES:

1. FORGING TOLERANCE

LENGTH AND HEIGHT TOLERANCE	+1.2	−0.6
THICKNESS TOLERANCE	+1.2	−0.5

FILLET AND EDGE RADII	MM	TOL%
	0−10	+50−25
	10−32	+40−20
	32−100	+32−15

2. MISMATCH −0.5
3. RESIDUAL FLASH −0.6
4. DRAFT −7°
5. UNSPECIFIED FORGING RADII R2.5
6. FORGING SHALL COMPLY WITH THE REQUIREMENTS OF APPLICABLE PROCEDURE UNSPECIFIED
7. DIMENSIONS IN THE DRAWING EXCLUDE FORGING DRAFT
8. MACHINING ALLOWANCES ARE INCLUDED IN ALL MACHINABLE SURFACES MARKED ⊗
9. FINISH MACHINED DIMENSION ARE INDICATED WITHIN BRACKETS FOR INFORMATION ONLY
10. FORGINGS ARE TO BE SAND BLASTED OR SHOT SLASTED AND HEAT TREATED AS SPECIFIED
11. THE MATERIAL SPECIFICATION TYPE NO .AND SUPPLIER'S CODE SHALL BE IN RAISED LETTERS
12. SIZE OF FORGING LETTERS 5MM
13. FOR LF2 MATL , HARDNESS SHOULD NOT BE MORE THAN 22 HRC.
14. # MARKED ITEMS IGC TEST SHALL BE CONDUCTED.

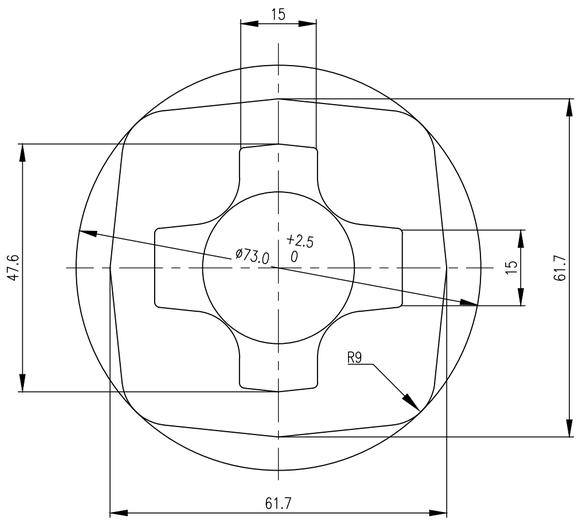

SECTION−AA

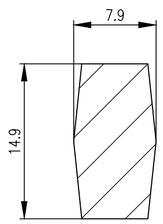

TYPE.NO **	MATL. MARK *	SL No.	DESCRIPTION	MATL CODE	MATL SPECN	HEAT TREATMENT	SCRAP SORT	NET WT (kg)	GROSS WT (kg)	DRAWING No	ITEM No
HN35	F316L	09	DIE FORGING	92502199	ASTM−A182 F316L CERTIFY	SOLUTION ANNEALED	46	0.72	−	2.V.HN35.02507F/00	019
U780	F316	#08	DIE FORGING	92502134	ASTM−A182 F316 CERTIFY	SOLUTION ANNEALED	46	0.72	−	2.V.U780.02507F/00	019
HL90	F51	07	DIE FORGING	92502078	ASTM−A182 F51 CERTIFY	SOLUTION ANNEALED	46	0.72	−	2.V.HL90.02507F/00	019
HL62	F304L	06	DIE FORGING	92502046	ASTM−A182 F304L CERTIFY	SOLUTION ANNEALED	46	0.72	−	2.V.HL62.02507F/00	019
5919	F316 L	05	DIE FORGING	92008455	ASTM−A182 F316L CERTIFY	SOLUTION ANNEALED	46	0.72	−	2.V.5919.02507F/04	019
5291	LF2	04	DIE FORGING	92008431	ASTM−A350 LF2−CERTIFY	N & T	46	0.72	−	2.V.5291.02507F/04	019
5969	F304	03	DIE FORGING	92008393	ASTM−A182 F304 CERTIFY	SOLUTION ANNEALED	46	0.72	−	2.V.5969.02507F/04	019
5933	F316	02	DIE FORGING	92008387	ASTM−A182 F316 CERTIFY	SOLUTION ANNEALED	46	0.72	−	2.V.5933.02507F/04	019
5903	A105	01	DIE FORGING	92008301	ASTM−A105 CERTIFY	NORMALISED	46	0.72	−	2.V.5903.02507F/04	019

REV	DATE	ALTERED		REV	DATE	ALTERED		REV	DATE	ALTERED	
06	26.09.17	MADHURAM	RP & KRS	05	15.06.16	DRS	DRS & KRS	04	29.01.97	R.MOHAN	K.S.RAMAN
	Sl.no.07 included.				Sl.no.06 included.			DCN. FS:0572	QUALITY REFERANCES REMOVED.		

REV	DATE	ALTERED		REV	DATE	ALTERED		REV	DATE	ALTERED		REV	DATE	ALTERED		REV	DATE	ALTERED	
08	31.01.19	MADHURAM	MRP & KRS	07	11.10.18	MADHURAM	MADHURAM & KRS	03	31.08.85	S.V.NATHAN	K.S.RAMAN	02	07.01.85	M.SRINIVASAN	S.KUMAR	01	18.06.83	S.V.NATHAN	G.V.RAMAN
	Sl.no.09 included				Sl.no.08 included Note no.14 included				F316L MATL. INCLUDED				A 350−LF2 MATL. INCLUDED			ZONE	F316 AND F304 MATL INTRODUCED. DRG.NO.2.V.0000.02507F WAS 2.V.5903.02507F		

CAUTION: The information on this document is the property of BHARAT HEAVY ELECTRICALS LTD. It must not be used directly or indirectly in any way detrimental to the interest of the company.

TYPE OF PRODUCT
OR NAME OF
CUSTOMER/PROJECT

BHARAT HEAVY ELECTRICALS LTD.,
UNIT: HIGH PRESSURE BOILER PLANT.
TIRUCHIRAPALLI−620014.
365−120

	NAME	SIGN	DATE	NO.OF VAR.
DRN	M.SRINIVASAN		19.07.05	
CHD	P.BOOMINATHAN		19.07.05	
APPD	K.S.RAMAN		19.07.05	

DEPT	SCALE	WEIGHT (KG).	REFERENCE INFORMATIONS	NO. OF ITEMS
V L	N T S	0.72		
CODE 320				

TITLE	CARD CODE	DRAWING NO.	REV
YOKE 3/4"−C800	U 01	2−V−0000−02507F	08

Size A2