DRAWING NO. 2-V-0000-18478P

ALL DIMENSIONS ARE IN MILLIMETRES. FOR TOLERANCES OF UNTOLERANCED DIMENSIONS DURING MANUFACTURE REFER RELEVANT QCP / QP

12.5 3.2

SECTION A-A

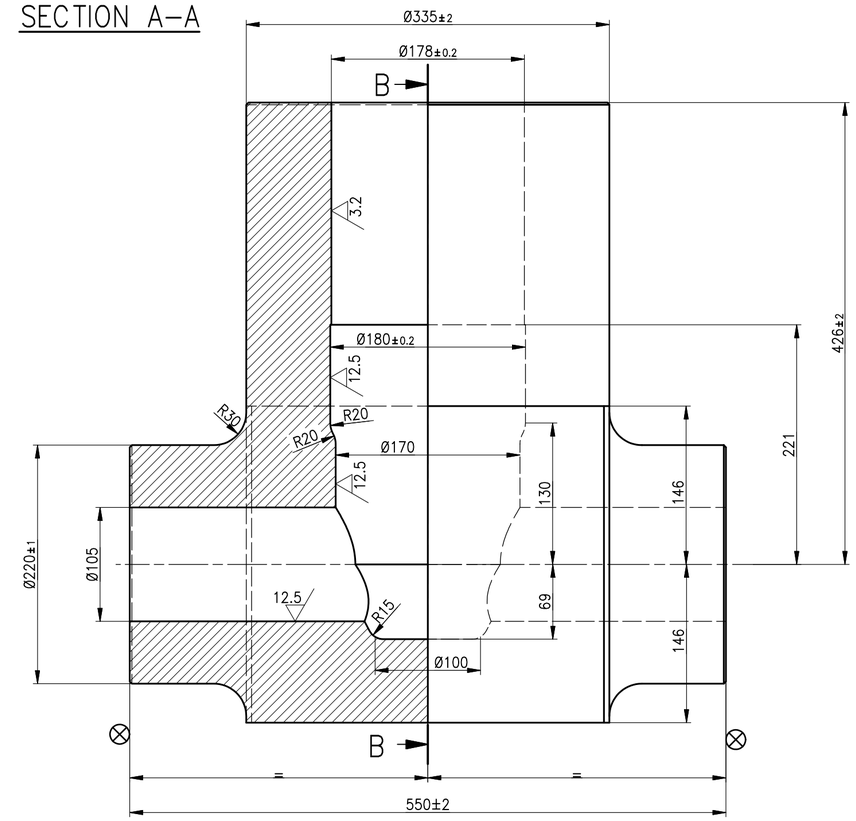

SECTION B-B

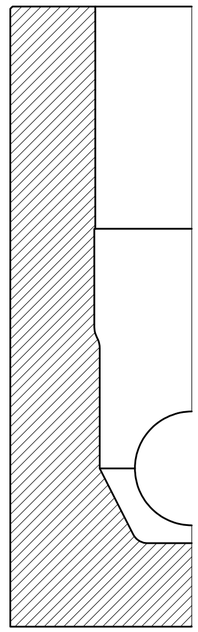

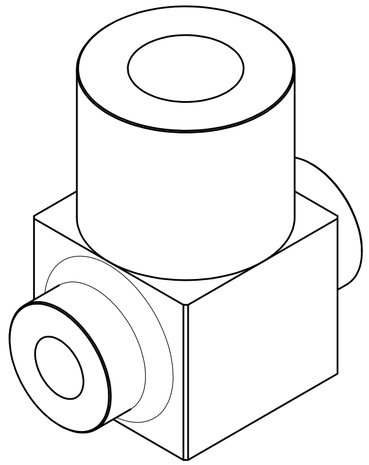

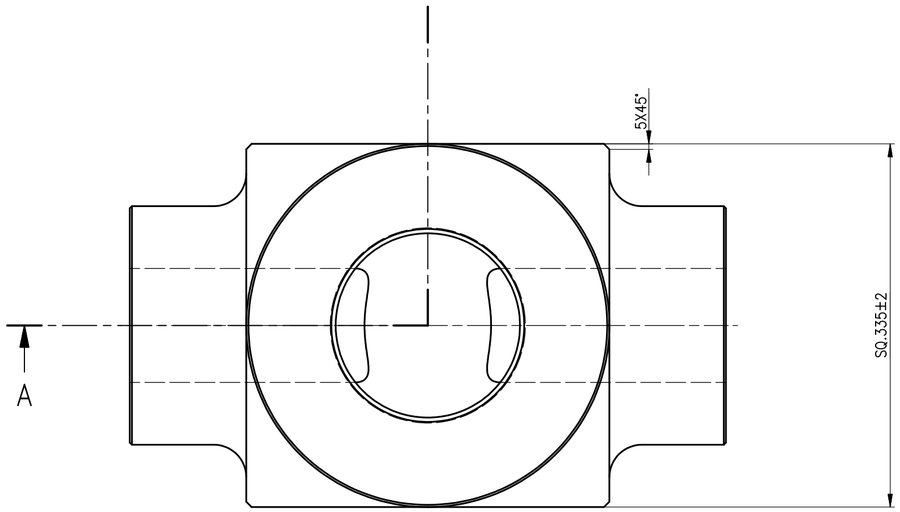

NOTES:-

1. CHAMFER THE SHARP CORNERS TO 1x45°
2. ⊗ INDICATES THE SURFACES WHICH ARE TO BE MACHINED FURTHER.
3. FORGING SHALL BE COMPLY WITH REQUIREMENTS OF THE LATEST APPLICALBLE QUALITY WORK INSTRUCTION.

MATERIAL MARK	No OFF	DESCRIPTION	MATL CODE	MATL SPECN	HEAT TREATMENT	SCRAP SORT	NET WT (kg)	GROSS WT (kg)	DRAWING No	ITEM No
F92		FORGING	92 204 028	SA182 F92, ATTEST	NT	--	--	--	2.V.V756.18478P	01

TYPE OF PRODUCT OR NAME OF CUSTOMER/PROJECT: TA

BHARAT HEAVY ELECTRICALS LTD.,
UNIT: HIGH PRESSURE BOILER PLANT.
TIRUCHIRAPALLI-620014.
365-120

	NAME	SIGN	DATE	NO.OF VAR.
DRN	R.P.SINGH		25.01.19	
CHD	S.SATHEES		25.01.19	
APPD	K.RAJASEKARAN		25.01.19	

DEPT: V L
CODE: 320
SCALE: NTS
WEIGHT (KG): 400.5
REFERENCE INFORMATIONS
NO. OF ITEMS

TITLE: BODY (PROOF MACHINED)
6"-C3500SPL
CARD CODE: U 01
DRAWING NO.: 2-V-0000-18478P
REV

REV	DATE	ALTERED
		CHD & APPD

ZONE

CAUTION: The information on this document is the property of BHARAT HEAVY ELECTRICALS LTD. It must not be used directly or indirectly in any way detrimental to the interest of the company.

Size A2