RENOVATION & RETROFITTING OF ESP PACKAGE FOR, 4 X 210 MW (Unit 1 to 4)
Kahalgaon STPS

TECHNICAL SPECIFICATION FOR LIGHITNG FIXTURES, LAMP & MISC. ITEMS

DOC. NO. PE-TS-455-558-E001

REVISION 0

BHARAT HEAVY ELECTRICALS LIMITED

POWER SECTOR

PROJECT ENGINEERING MANAGEMENT

NOIDA, INDIA

CONTENTS

S NO.	DESCRIPTION	NO. OF SHEETS
01	**SECTION - I**	
	COMPLIANCE CERTIFICATE	1
	SPECIFIC TECHNICAL REQUIREMENT WITH ANNEXURE-A & ANNEXURE-B	17
	DATA SHEET-A	4
	LIST OF SUB VENDORS (ANNEXURE-C)	4
	PACKING SPECIFICATION (ANNEXURE-D)	1
	TYPICAL MOUNTING ARRANGEMENT DRAWING (ANNEXURE-E)	10
02	**SECTION - II**	
	STANDARD TECHNICAL REQUIRMENTS	19
	QUALITY PLAN	5
TOTAL NUMBER OF SHEETS (INCLUDING COVER & SEPARATOR SHEETS:		**64**

COMPLIANCE CERTIFICATE

The bidder shall confirm compliance to the following by signing/ stamping this compliance certificate and furnishing same with the offer.

1. The scope of supply, technical details, construction features, design parameters etc. shall be as per technical specification & there are no exclusion/ deviation with regard to same.

2. There is no deviation with respect to specification other than those furnished in the 'schedule of deviations'.

3. Only those technical submittals which are specifically asked for in NIT to be submitted at tender stage shall be considered as part of offer. Any other submission, even if made, shall not be considered as part of offer.

4. Any comments/ clarifications on technical/ inspection requirements furnished as part of bidder's covering letter shall not be considered by BHEL, and bidder's offer shall be construed to be in conformance with the specification.

5. Any changes made by the bidder in the price schedule with respect to the description/ quantities from those given in BOQ-Cum-Price schedule of the specification shall not be considered (i.e. technical description & quantities as per specification shall prevail).

BIDDER'S STAMP & SIGNATURE

1.0 SCOPE OF SUPPLY AND SERVICES

1.1 SUPPLY:

Design, manufacture, assembly, inspection & testing at vendor's/ sub-vendor's works, proper packing and delivery to site of Lighting system as mentioned in different sections of this specification, complete with all accessories for efficient and trouble-free operation.

It is not the intent to specify completely herein all details of the equipment, nevertheless, the equipment shall be complete and operative in all respects and shall conform to the highest standard of engineering, design and workmanship.

1.2 SYSTEM DESIGN ENGINEERING:

SYSTEM DESIGN ENGINEERING: System Design Engineering is included in vendor's scope, which includes design of complete lighting system for indoor and outdoor areas of the power plant. Please refer the list of LLO/LDC/CLO/PDS drawings as per Annexure-B for the tentative areas to be covered by the lighting system. The aspect of engineering covers preparation of electrical distribution and control schemes, quantity estimation, luminaire layout drawings, conduit layout drawings, wiring schemes upto luminaires, cable schedules and all associated design work not specifically mentioned in the specification. The quantity estimation to include all items required for the complete lighting system viz. lighting fixtures, lamps, Lighting DBs, Welding DBs, lighting panels, conduits, PVC wires etc.

All outdoor lighting system shall be automatically controlled by synchronous timer. Provision to bypass the timer shall be provided in the panel.

The system shall include distribution boards, normal/ emergency lighting panels, lighting fixtures, junction boxes, receptacles, switch boards, conduits, and wires, etc. The system shall cover all interior and exterior lighting such as area lighting etc. Outgoing circuits in LPs shall be provided with MCBs of adequate ratings.

The illumination system shall be designed on the basis of best engineering practice and shall ensure uniform, reliable, aesthetically pleasing and glare free illumination. The lighting fixtures shall be designed for minimum glare. The design shall prevent glare/luminous patch seen on VDUI Large video screens, when viewed from an angle. The finish of the fixtures shall be such that no bright spots are produced either by direct light source or by reflection. The diffusers/louvers used in fixtures shall be made of impact resistant polystyrene sheet and shall have no yellowing property over a prolonged period. The Lux levels to be adopted for various area are indicated at Annexure – A.

While finalizing the detailed layout of lighting fixtures, the position/location and layout of equipments should be taken into account to have adequate illumination at desired locations.

Apart from maintenance factor as given below, Temperature correction factor shall be considered in the lighting design for fixtures located in non-air conditioned area.

(a.) Office area (air conditioned)	0.8
(b.) Office area (non air conditioned) and other indoor area	0.7
(c.) Dust prone indoor and outdoor area	0.6

(d) Coal Handling area, Ash Handling Conveyor /Transfer Points etc. 0.5

1.3 Although Erection and Commissioning is not included in vendor's scope, the vendor shall still not be absolved of his responsibility of establishing the correctness of equipment at site.

1.4 Standard technical requirements of the various items of lighting system design requirements are indicated in Section-II. Project specific requirements are listed in Section-I.

1.5 The stipulations of Section-I, followed by those of Data Sheet-A shall prevail and govern in case of conflict between the corresponding requirements of Section-I and Section-II.

1.6 Review of sub-vendor's documents by the purchaser shall not relieve the vendor from the responsibility of design & supply.

1.7 The documents shall be in English language and MKS system of units.

1.8 Make of all equipment and components shall be as per attached Sub-Vendor List enclosed as per Annexure-C to section- I.

2.0 **BILL OF QUANTITIES:**

2.1 Quantity requirements shall be as per BOQ-cum-price schedule as part of NIT.

3.0 **STATUTORY AND REGULATORY REGULATION**

3.1 Statutory and regulatory regulation shall be applicable as per Indian Electricity Rule, 1956 with amendment-3 Rule no. 35, 48, 49, 50, 61 & 64 for illumination & low voltage power services.

4.0 **DOCUMENTATION**

4.1 Documents required along with the technical offer: -

a) Signed & Stamped copy of Compliance certificate

b) Signed & stamped copy of unpriced price schedule with "quoted" word indicated against all items.

4.2 Documents required after award of LOI/PO shall be as detailed in specification (to be submitted by successful bidder).

5.0 <u>GENERAL REQUIREMENTS</u>

All the electrical equipment and devices shall be designed for design ambient temperature of 50 ºC.

Technical Parameters for various equipment are listed in 'Data Sheet-A' attached with this section.

All cable glands & lugs (for the equipments in bidder's scope) for all incoming & outgoing cables are in bidder's scope. Sizes of cables shall be intimated during detailed engineering.

Cable shall be terminated using double compression type cable glands. Testing requirements of Cable glands shall conform to BS:6121 and gland shall be of robust construction capable of clamping cable and cable armour (for armoured cables) firmly without injury to insulation. Cable glands shall be made of heavy duty brass machine finished and nickel chrome plated. Thickness of plating shall not be less than 10 microns. Cable glands shall be suitable for the sizes of cable supplied/erected.

Cable lugs/ferrules for power cables shall be tinned copper solderless crimping type suitable for aluminium compacted conductor cables. Cable lugs and ferrules for control cables shall be tinned copper type. The cable lugs for control cables shall be provided with insulating sleeve and shall suit the type of terminals provided on the equipments. Cable lugs and ferrule shall conform to relevant standard

Name Plates

Name plates shall be furnished for identification of devices and circuits. All switches, controls and indications shall be permanently and legibly marked in English as to clearly indicate their functions.

All lighting fixtures, receptacles, fans, junction boxes etc. shall be property marked up indelibly with corresponding circuit numbers.

Samples

Owner reserves the right to call for samples if considered necessary and the same hall be submitted by the Bidder free and without any obligation.

6.0 SPECIFIC TECHNICAL REQUIREMENTS

6.1 Equipment and Material

Equipment and material shall comply with description, rating, type and size as detailed in this specification, drawings and annexure.

Equipment and materials furnished shall be complete and operative in all details.

All accessories, control devices, internal wiring, fittings, supports, hangers, anchor bolts etc. which form part of the equipment or which are necessary for safe and satisfactory installation and operation of the equipment shall be furnished.

All parts shall be made accurately to standard gauges so as to facilitate replacement and repair. All corresponding parts of similar equipment shall be interchangeable.

6.2 **Lighting Fixtures**

Description of fixtures shall be as mentioned below:

SL. NO.	Type of Luminaire	Description	Total Luminous flux (Lumen) of luminaire - Minimum value	Measured Electrical Input Power (Watt) - Maximum value
1	FC02 (LED)	industrial box type base LED fixture	3780	42
2	FC06 (LED)	Industrial type LED fixture suitable for conduit /surface/ suspended mounting, with integral driver aesthetically designed for Switchgear / Equipment room	3780	42
3	FC26 (LED)	Panel (600 mm X 600 mm) LED luminaire suitable for recess mounting in false ceiling with integral driver aesthetically designed for Control Room/ Office	3780	42
8	SS62 (LED)	Street light LED fixture	10080	112
9	SW41 (LED)	Well glass type, vapour proof LED fixture suitable for platforms	4680	52
10	SW42 (LED)	Well glass type, vapour proof LED fixture suitable for platforms	7380	82

Notes:

1) LED must comply with all the parameters of IS 16105 or IESNA LM-80-08.
2) The Luminaire must comply with all the parameters of IS 16106 or IESNA LM-79-08.
3) The LED driver should comply to IEC 61347-2-13, IS 15885: Part 2: Sec 13, IEC 62384, IS 16104 and CISPR 15.
4) The luminaire complete with all accessories shall comply with relevant specified standards.
5) The values of minimum luminous flux & maximum measured electrical input power are specified above for the luminaire (including any accessories like driver module etc.). These values shall be measured as per IS 16106 & shall not be subject to any further tolerance.
6) All parameters mentioned in Section-II, Clause 5.2 are to be complied in totality.

In false ceiling area LED luminaires shall be recessed mounting type & in non-false ceiling area the LED luminaires shall be surface mounting type.

The individual lamp wattage for LED shall be up to 3 watt Fractional wattage LEDs are also acceptable. The LED chip efficacy shall be min 120 Lm/W. The luminaire efficacy shall be not less than 90 Lm/W. Suitable heat sink shall be designed & provided in the luminaire. The LED used in the luminaires shall have colour rendering index (CRI) of Min 70. Colour designation of LED shall be "cool day light" (min 5700K) type for indoor areas. However, for outdoor areas, the colour temperature of LED shall be min. 4000K, including rough & dust prone areas. LED shall conform to the LM 80 requirements.

The max. junction temperature of LED shall be 85 deg C. Further the lumen maintenance at this temperature shall be min 90%. The THD of LED Luminaires shall be less than 10%. Further the EMC shall be as per IS 14700. The power factor of the luminaire shall not be less than 0.9. The marking on luminaire & safety requirements of luminaire shall be as per IS standards. Suitable heat sink with proper thermal management shall be designed & provided in the luminaire.

The connecting wires used inside the system, shall be low smoke halogen free, fire retardant type and fuse protection shall be provided in input side specifically for LED luminaires.

Care shall be taken in the design that there is no water stagnation anywhere in the housing of luminaire. The entire housing shall be dust and water proof protection as per IS 12063.

Fixture shall be suitable for 20 mm conduit entry and 14 SWG GI earth wire connection.

All outdoor fixtures shall be weather proof and of min. IP65 degree of protection

For Indoor type of fixtures: -

(a) Surface/Pendent mounting: - IP 54 class of protection.

(b) Recess Mounting (False ceiling): - IP 20 class of protection

Fixtures shall be fully wired up to respective terminal blocks, suitable for loop in and loop out connection of PVC wires of following sizes:

a)	Lighting fixture	:	2.5 mm^2 copper
b)	Street light fixture	:	2.5 mm^2 copper

The connecting wire used inside the system, shall be low smoke halogen free, fire retardant type and fuse protection shall be provided in input side specifically for LED luminaries.

6.3 Driver Circuit

LED modules and drivers shall be compatible to each other. The LED module driver's ratings and makes shall be as recommended by corresponding LED chip manufacturer.

LED Drivers shall have following control & protections: -

- Suitable precision current control of LED.
- Open Circuit Protection
- Short Circuit Protection
- Over Temperature Protection
- Overload Protection

6.4 Emergency lighting Unit

Emergency lighting Unit shall be provided through self-contained DC emergency fixtures with four (4) hours back-up duration, each shall be provided with Ni-cd battery, battery Charger & 2x10 W fluorescent lamps.

6.5 Emergency EXIT lamps:

Emergency exit lamps backed up by battery shall be provided at strategic locations of the building for safe exit of personnel. These exit lamps will remain ON all the time and normally received power supply from ACELP.

Exit lamp unit shall contain maintenance free Ni-Cd battery with 0.5 hours backup capacity.

6.6 Receptacles

Receptacle unit shall consist of socket outlet with associated switch and plug. The socket outlet and switch shall be flush mounted on a box which shall be suitable for mounting on wall or steel structures.

Receptacles boxes shall be fabricated out of 2 mm thick MS steel hot dip galvanized or of not less than 2.5 mm thick die-cast aluminium alloy or fabricated out of 2 mm thick CRCA sheet with electro static powder coating. IP-degree of protection shall be applicable to receptacles Type 'RA &''RC' only

Steel boxes shall be hot dip galvanised as per the requirements of applicable standard corresponding to the sheet thickness.

The boxes shall have conduit knock-outs and shall be suitable for cable entry of the size to be specified by purchaser during detailed engineering.

The boxes shall be provided with neoprene rubber gaskets to make them moisture and dust proof.

Suitable loop-in and loop-out terminals shall be provided inside the box. Terminals for incoming and outgoing shall be suitable for the size of conductor of cables.

Each receptacle box shall consist of the following :

a) Single Phase : Porcelain body, metal clad, 3 pin socket with third pin grounded. Socket to be provided with a metallic cover and chain. Voltage rating shall be suitable as per System Design Data.

b) Three Phase : Porcelain body, metal clad, 5 pin socket with fifth pin grounded. Socket to be provided with a metallic cover and chain. Voltage rating shall be suitable as per System Design Data.

c) Shrouded, die-cast aluminium plug suitable for above socket.

d) Rotary, heavy duty switch suitable for above socket conforming to applicable standard.

Mechanical interlock shall be provided as follows :

a) Switch can be put ON only when plug is fully engaged.

b) Plug can be withdrawn only when switch is in OFF position.

c) Receptacle box cover can be opened only when switch is in OFF position and plug withdrawn.

Degree of protection shall be IP: 55

Types of Industrial Receptacles

a) RA - Single phase, 20 Amp socket and 20 Amp switch.
b) RC - Three Phase, 63 Amp socket and 63 Amp switch along with fuses and link.

Flush type indoor receptacles (Type-RB)

Flush type 3 pin, 6/16A, 240 V AC (pin decorative piano key type switch) receptacles shall be so located that only the plug projects outside. The receptacle shall be complete with 16A Plate type switch switch & safety shutter. It shall be housed in suitable sheet steel enclosure with 3mm thick Perspex sheet cover.

RCCBs/RCD of 30mA sensitivity shall be provided in incomer of all Welding / power point Local panels.

Terminal Block size

RA 1-4 way, suitable for loop in loop- out of 10 sq.mm. Al. Conductor

RB 1-4 way, suitable for loop in loop- out of up to 10 sq.mm. Al. Conductor

RC 1-4 way, suitable for loop in loop- out of 2 core -16 sq.mm. Al. Cable.

6.7 WIRING / CONDUITS

Wiring of lighting system will be done as follows:

(i) Wiring installation will be done by multi-stranded, PVC insulated, unsheathed, copper, colour coded wires laid in GI conduits of 20 mm dia size (minimum) conforming to IS-9537. The thickness of conduits up to & including 25 mm dia will be 1.6 mm and conduits above 25 mm will be 2.0 mm. Colour of the PVC insulation

of wires shall be Red, Yellow, Blue, black for R, Y, and B phases & neutral respectively and white & grey for DC positive & DC negative circuits respectively.

(ii) Conduits will be heavy-duty type hot dip galvanised steel conforming to IS-9537. Conduit accessories will be hot dip galvanised. In corrosive area, conduits will have suitable epoxy coating additionally.

(iii) Flexible conduits shall be water proof and rust proof made of heat resistant TERNE coated steel.

(iv) Conduits in office rooms, control room, service building, laboratory building and other air-conditioned areas will be surface mounted on the roof above false ceiling. However vertical drops of conduits will be concealed along walls and finally plastered for better aesthetics. Vertical drops along RCC column shall be exposed.

(v) Filling area of wires in conduit shall not exceed 40% of the conduit area.

(vi) Wiring for AC Normal, AC Emergency, and DC Emergency services will run in separate conduits

(vii) Lighting and receptacles will be fed from separate circuits. No two different phase circuits will be run in the same conduit. However, different circuits of same phase may be laid in the same conduit.

Following sizes of 1100 V grade, PVC insulated, single core, stranded copper conductor wires will be used:

Lighting Panel to Fixtures:	2.5 sq. mm (Cu)
Lighting Panel to JBs/ Switches:	2.5 sq. mm (Cu)
JBs/ switches to Fixtures:	2.5 sq. mm (Cu)
Panel to First receptacles:	4 sq. mm (Cu)
First receptacles to looping other receptacles (240V,1 phase receptacles):	4 sq. mm (Cu)
In case of only one receptacles in ckt., Panel to receptacles (240V,1 phase receptacles):	4 sq. mm (Cu)

6.8 EARTHING

Earthing of lighting system will be done by using of following sizes of wire / flat:

Lighting Distribution Board:	GS Flat 50x6 mm
Lighting Panels:	GS Flat 50x6 mm

Lighting fixtures, receptacles, conduits, junction

boxes & switch boxes: 14 SWG GI wire

Welding receptacles: GS Flat 25x6 mm

6.9 Fans & Regulators

The fans shall have three well balanced blades, and shall be reasonably free from noise.

The ceiling fans shall be suitable for operation on 240 V +/-10%, 50 Hz, AC supply comprising of class 'E' or better insulated copper wound single phase motor, 1200mm sweep, aerodynamically designed well balanced AL blades (3 Nos.), down rod, die cast aluminium housing, capacitor, suspension hook, canopies etc. finished in stove enamelled white or with electro static powder coating. Power factor of fans shall not be less than 0.9. Fan regulators shall be stepped electronic type suitable for operation on 240V +/- 10% AC supply.

6.10 Junction Boxes, Conduits, Fitting & Accessories, Pull Out Boxes:

Junction box for indoor lighting shall be made of fire retardant material. Material of JB shall be Thermoplastic or thermosetting or FRP type.

All switches and receptacles upto 16A shall be modular type. These shall be provided with pre-galvanized/galvanized modular switchbox & plate.

Conduits, Pipes and Accessories Galvanised heavy duty steel conduits for normal area and galvanised heavy duty steel conduits with an additional epoxy coating for corrosive area shall be offered. Alternatively glass reinforced epoxy conduits with comparable compressive and impact strength with that of heavy duty steel conduits may be offered.

Flexible conduit shall be water proof and rust proof made of heat resistant lead coated steel.
Rigid steel conduits shall be heavy duty type, hot dip galvanised conforming to IS: 9537 Part-I & II shall be suitable for heavy mechanical stresses, threaded on both sides and threaded length shall be protected by zinc rich paint. Conduits shall be smooth from inside and outside.

Flexible conduit shall be water proof and rust proof made of heat resistant TERNE coated steel.

Pull out boxes shall be provided at suitable interval in a conduit run. Boxes shall be suitable for mounting on Walls, Columns, Structures, etc. Pull-out boxes shall have cover with screw and shall be provided with good quality gasket lining. Pull out boxes used outdoor shall be weather proof type suitable for IP: 55 degree of protection and those used indoor shall be suitable for IP: 52 degree of protection. Pull out box & its cover shall be hot dip galvanized.

The junction boxes shall be of following types:

Type of junction boxes:

Type Description

JB-F Provided with four (4) way stud type terminals for terminating upto 2Nos. 10 mm2

stranded aluminium conductors on each terminal, suitable for outdoor installations.

JB-S Provided with four (4) way stud type terminals, each terminal suitable for terminating upto two nos. of 16mm2 stranded aluminium conductors & with one no.6A HRC fuse and link.

6.11 Switch & Switch Board

Switch boxes shall be made of 1.6 mm thick MS sheet with 3 mm thick decorative, Perspex cover. Switch box shall be hot dip galvanized.

Switch boards / boxes shall have conduit knock outs on the sides. Adequate provision shall be made for ventilation of these boxes.

Switches shall have quick make and quick break mechanism operated by a suitable external handle complete with position indicator.

The size of switch-boxes shall be adequately chosen to accommodate the no. of switches and fan regulator boxes specified below. Fan regulators shall be supplied separately.

Switch boxes shall be of following type

Type No.	Switch	Fan Regulator	Socket	JB type
SWB1	5A-2 Nos	-	-	SW1
SWB2	5A-3 Nos	-	5A-1 No	SW2
SWB3*	5A-5 Nos	1	5A-1 No	SW3
SWB4*	5A-7 Nos	3	5A-1 No	SW3

‘* Space provision shall be kept for fan regulator in switch boxes.

‘** Shall have the provision for mounting the 16A contactor.

JB details for lighting control switch boxes are as below:

JB-SW1 Provided with four (4) way stud type terminals each terminal suitable for

terminating to 10mm2 stranded aluminium conductor.

JB-SW2 Similar to the JB-SW1 but provided with ten (10) way terminals.

JB-SW3 Similar to JB-SW1 but provided with eighteen (18) way terminals.

6.12 Maintenance Equipment

One (1) no. of wheel mounted adjustable aluminium ladder for the maintenance of street lights adjustable from 5 m to 10 m.

One (1) no. free standing adjustable aluminium ladder, adjustable from 5 m to 10 m.

6.13 INSPECTION & TESTING

SHOP TEST: All equipment shall be completely assembled, wired adjusted and routine tested as per relevant Indian standards at manufacturer's works.

Tests on lighting distribution boards/Panel shall include: a) wiring continuity tests b) high voltage insulation tests c) operational tests

All acceptance and routine tests as per the specification and relevant standards shall be carried out. Charges for acceptance, routine & type tests shall be deemed to be included in the equipment price.

TYPE TESTS

Type test reports of the following items as per technical specification requirements/standards shall be submitted for approval.

i. Lighting fixtures of each type
ii. Lighting panel of each type (Degree of Protection)
iii. Junction Box of each type.
iv) Lighting Distribution board

Type test reports for LED as per standards for following shall be submitted for approval.

LED fixtures Type test reports to be submitted for one rating each of type of LED fixtures

1. Visual and Dimension check
2. Proof of procurement of LEOs
3. Safety tests
a) Marking
b) Construction

c) Provision for Earthing
d) External and Internal wiring
e) Protection against electrical shock
f) Endurance and Thermal
g) Insulation resistance & electrical strength
h) Resistance to heat fire & tracking
i) Resistance to Humidity
4. Fire Retardant test
5. Performance tests (electrical, Photometric color and Life)
6. Burn-in Test
7. Power Cycling
8. Temperature rise test
9. Emission Tests
a) Radiated & conducted emission
b) Harmonics & flickers
10. Immunity tests

In addition, following test reports to be submitted for LED chip/LED luminaire:
a) LED parameters like Lumen per watt, CRI, Beam angle from manufacturer.
b) LM BO/IS: 16105 report.
c) LM 79/IS: 16106 report.

All equipment to be supplied shall be of type tested design. During detail engineering, the contractor shall submit for Owner's approval the reports of all the type tests as listed in this specification and carried out within last ten years from the date of bid opening. These reports should be for the test conducted on the equipment similar to those proposed to be supplied under this contract and the test(s) should have been either conducted at an independent laboratory or should have been witnessed by a client.

However, if the contractor is not able to submit report of the type test(s) conducted within last ten years from the date of bid opening, or in the case of type test report(s) are not found to be meeting the specification requirements, the contractor shall conduct all such tests under this contract at no additional cost to the owner either at third party lab or in presence of client/owners representative and submit the reports for approval.

6.14 Acceptance Test and Routine Test

All lighting fixtures, lamps and other items shall be subjected to acceptance and routine test, as per relevant specified standards.

Junction boxes, switch boxes, receptacle enclosure etc. shall be subjected to physical and dimensional checks also.

6.15 Galvanizing Tests

The quality of galvanizing shall be smooth, continuous, free from flux stains and shall be inspected visually.

In addition, following tests shall be conducted as acceptance tests.

(a) Uniformity of coating - The coating of any article shall withstand for one (1) minute dips in standard copper sulphate solution without the formation of an adherent red spot of metallic copper upon the basic metal.

(b) The quality of cadmium/zinc plating on items with screw threads shall be free from visible defects such as unplated areas, blisters and modules and shall be inspected visually.

(c) In addition, the plating thickness shall be determined microscopically/ chemically or electronically.

6.16 To be Submitted after Award of Contract:

Detail dimensional drawing showing constructional features, cable / conduit entry, grounding, fixing arrangement etc. of:

Receptacles & junction boxes
Lighting fixtured complete with lamps and accessories
Non-integral / separate type control gear box for lighting fixtures, as applicable

Data sheets for lighting fixture, lamps, accessories with light distribution curves, co-efficient of utilisation charts etc.

Any other relevant drawings, data and manuals necessary for satisfactory installation, operation and maintenance.

The Bidder may note that the drawings, data and manuals listed are minimum requirement only. The Bidder shall ensure that all other necessary write-ups, curves and information required to fully describe the equipment offered are submitted.

Annexure-B

Sr.no	Drawing No	Title	Primary/Secondary	
1	PE-V0-455-558-E011	GA drawing of lighting Fixtures	Primary	R-0 within 28 days of PO & subsequent revisions within 10 days of comments received from BHEL. BHEL shall furnish comments / approval on each submission within 18 days from receipt.
2	PE-V0-455-558-E012	OGA of equipment's such as, SBs, JBs, Receptacles, free standing ladder, Emergency exit sign, wheel mounted ladder, ceiling fans, ELU, etc.	Primary	
3	PE-V0-455-558-E907	MQP FOR LUMINARIES	Primary	
4	PE-V0-455-558-E908	MQP FOR MISCELLANEOUS ITEMS	Primary	
5	PE-V0-455-558-E013	Lighting design Calculation ESP control Room Unit-1,2 & 3	Secondary	R-0 within 3 weeks from the date of BHEL input drawing and re-submission within 15 days of receipt of BHEL comments BHEL shall furnish comments / approval on each submission within 18 days from receipt.
6	PE-V0-455-558-E014	Lighting Layout Calculation ESP control Room Unit-1,2 & 3	Secondary	
7	PE-V0-455-558-E015	Conduit Layout ESP control Room Unit-1,2 & 3	Secondary	Conduit Layout drawings (CLOs) within 15 days from the approval of LLOs & re-submission within 15 days of BHEL comments. BHEL shall furnish comments / approval on each submission within 18 days from receipt.
8	PE-V0-455-558-E016	Lighting design Calculation ESP Platforms Unit-1,2 & 3	Secondary	R-0 within 3 weeks from the date of BHEL input drawing and re-submission within 15 days of receipt of BHEL comments
9	PE-V0-455-558-E017	Lighting Layout Calculation ESP Platforms Unit-1,2 & 3	Secondary	

				BHEL shall furnish comments / approval on each submission within 18 days from receipt.
10	PE-V0-455-558-E018	Conduit Layout ESP Platforms Unit-1,2 & 3	Secondary	Conduit Layout drawings (CLOs) within 15 days from the approval of LLOs & re-submission within 15 days of BHEL comments. BHEL shall furnish comments / approval on each submission within 18 days from receipt.
11	PE-V0-455-558-E019	MOUNTING ARRANGEMENT OF Lighting Fixtures	Secondary	R-0 within 28 days of PO & subsequent revisions within 10 days of comments received from BHEL. BHEL shall furnish comments / approval on each submission within 18 days from receipt.
12	PE-V0-455-558-E020	TYPE TEST REPORTS FOR LIGHTING FIXTURES	Secondary	*R-0 within 28 days of PO & subsequent revisions within 10 days of comments received from BHEL. BHEL shall furnish comments / approval on each submission within 18 days from receipt.
13	PE-V0-455-558-E021	FIELD QUALITY PLAN OF LIGHTING FIXTURES	Secondary	Within 3 months from PO

*Within one week of type test conduction if the contractor is not able to submit report of the type test(s) conducted within last ten years from the date of bid opening, or in the case of type test report(s) are not found to be meeting the specification requirements, the contractor shall conduct all such tests under this contract at no additional cost to the owner either at third party lab or in presence of client/owners representative and submit the reports for approval.

Further if submission of any documents is required during detail engineering than same submission/ re submission schedule shall be followed.

Preparation of as built drawing shall be in BHEL Scope. However, vendor shall furnish the Auto Cad/editable copy of final approved drawing/document.

6.17 Drawing/Documents distribution schedule

For all technical tables and diagrams, calculation results, drawings, test data and scales adopted in the design the standard international unit system (SI) as per International Standardization Organization (ISO) shall be uniformly employed.

All engineering documents and drawings shall be of international "A" series sizes that is of A0, A1, A2, A3 & A4.

6.17 Lux Level Requirement

ANNEXURE-A

AVERAGE LUX LEVEL & TYPE OF FIXTURES

S. No.	LOCATION	AVERAGE LUX LEVEL	TYPE OF FIXTURE
1	Switchgear rooms, charger, rectifier room	200	Industrial type LED Luminaire
2	Control room, computer room, control equipment room	350	LED Luminaire equivalent to Mirror optics with anti-glare features or down lighter.
3	Offices, conference room etc.	300	Decorative mirror optics Type LED luminaire or LED down lighter
4	Transformer area	20 (general) 50 (on equipment)	LED luminaire
5	Diesel generating room/enclosure, compressor room, pump house etc.	150	LED medium bay/Industrial type LED Luminaire

6	Cable galleries/vault	50	Industrial type LED Luminaire
7	ESP platform	150	LED well glass fixtures

1.0 **SYSTEM DESIGN DATA**

1.1 Design Ambient : 50^0 C

1.2 Details of Operating Parameters

a) AC Supply

i. Rated Voltage : 415 V

ii. Rated Frequency : 50 HZ

iii. Voltage variation: (Permissible) : ± 10%

iv. Frequency variation (Permissible) : +3% to - 5%

v. Combined voltage & frequency variation (sum of absolutes permissible) : 10 %

vi. System fault level at rated voltage : 20 KA for 1 sec

2.0 **APPLICABLE STANDARDS** : As per specification

3.0 **LIGHTING CONCEPT**

3.1 Areas

a) Location : [ ] Indoor [ ] Outdoor [√] Both

b) Street Lighting : [] Yes [√] No

c) Platforms : [√] Yes [ ] No

3.2 Types of supplies considered (other than AC Normal)

a) DC Normal : [ ] Yes [√] No

b) DC Emergency : [ ] Yes [√] No

c) AC Emergency : [√] Yes [ ] No

3.3 Diversity Factor Considered for Sockets : 25 %

4.0 **SCOPE OF SYSTEM DESIGN ENGG.** : [√] Included in vendor's scope
[ ] Excluded from vendor's scope

5.0 **LUMINAIRES, LAMPS & ACCESSORIES**

5.1 Whether all type of luminaires as per BOQ offered : [√] Yes [ ] No

5.1.1 If no, Types of luminaires not offered as per BOQ : NA

5.2 List of lamps which can be installed only specified angle. : None

5.3 Type of false ceiling for recessed fluorescent luminaire : Grid False ceiling (600mm X 600mm)

5.4 Degree of Protection for drip proof luminaires : IP55

5.5 outdoor fixtures (SW41 & SW42) : min. IP65 degree of protection

5.6 Non-Integral control gear box (If applicable)

a) Sheet thickness : 2mm

b) Degree of protection : IP-55

c) Surface treatment : [√] Painted (Powder coated) [ ] Galvanised

d) If galvanised

i. Wt. of Zinc : N.A.

ii. Process : N.A.

e) If painted

i. Colour to IS : Relevant IS

ii Minimum paint thickness : DDE

5.7 Emergency lighting unit

5.7.1 Wattage and No. of incandescent lamp : 2 x 10 W FLT

5.8.2 Type of battery : Ni-Cd

5.8.3 Emergency duration of unit : 4 Hours

6.0 DESIGN PARAMETERS OF MAIN EQUIPMENT

6.1 Receptacles

6.1.1 Material : MS sheet & hot dip galvanised/ Die cast aluminium alloy

6.1.2 Sheet thickness : 2mm (min) / 2.5mm (min) respectively

6.1.3 Galvanization

a) Process :

b) Wt. of zinc deposited :

6.1.4 Degree of protection : IP-55

7.0 FLEXIBLE CONDUITS:

a) Material : **Water proof and rust proof made of heat resistant terne coated steel.**

b) Standard applicable :IS: 3480

c) Surface treatment : Electro galvanized as per IS: 3480

d) Minimum thickness : 25 microns of zinc coating

8.0 LABELING

Requirement of Specification complied : [√] Yes [ ] No

9.0 PAINTING

10.1 Shade (As per IS:5) : **Interior** **Exterior**

a) Receptacles :

Decorative :

Industrial :

b) Lighting kit box :

c) Emergency lighting Unit :

d) Junction Box : RAL7035 RAL7035

10.2 Finish

a) Interior : [ ] Matt [√] Semi - glossy

b) Exterior : [√] Semi - glossy [ ] Full - glossy

10.3 Paint Thickness(min) : As per spec

11.0 **MAKE** **:** As per spec

RENOVATION & RETROFITTING OF ESP PACKAGE FOR, 4 X 210 MW (Unit 1 to 4) Kahalgaon STPS			
STATION LIGHTING SYSTEM (Proposed List of Sub vendor)			
S.No.	**ITEM DESCRIPTION**	**SUB-SUPPLIERS Name PROPOSED BY M/S BHEL**	**REMARKS**
1	LIGHTING FIXTURES (LED)	SURYA ROSHNI LIMITED	PADMA TOWER, RAJENDRA PLACE, RAJENDRA PLACE NEW DELHI
2		BAJAJ ELECTRICALS	BAJAJ ELECTRICALS LTD. ENGINEERING & PROJECTS BU (NORTH) 3rd FLOOR, GULMOHARHOUSE, COMMUNITY CENTRE 161/B-4, GAUTAM NAGAR, YUSUF SARAI NEW DELHI – 110049
3		PHILIPS	9TH FLOOR,DLF 9B, DLF CYBER CITY, DLF PHASE-III,GURGAON-122002
4		WIPRO LTD.	WIPRO CONSUMER CARE AND LIGHTING, 5TH FLOOR, GODREJ ETERNIA -C, OLD PUNE-MUMBAI ROAD, SHIVAJINAGAR, PUNE -411005
5		CROMPTON GREAVES	3RD FLOOR, EXPRESS BUILDING,9-10, BAHADUR SHAH ZAFAR MARG, NEAR ITO CROSSING,NEW DELHI-110002, INDIA
6		Goldwyn	D-115A, HOISARY COMPLEX, PHASE -II NOIDA-201305
1	LIGHTING SWITCH , SOCKET	ELEXPRO ELECTRICALS PVT/ LTD.	C 1/27 & 37 GIDC KABILPORE NAVSARI-396424
2		ANCHOR	STEEL HOUSE, B WING, PLOT NO. 24, MAHAL INDUSTRIAL ESTATE, MAHAKALI CAVES ROAD, NEAR PAPER BOX, ANDHERI (E), MUMBAI, MAHARASHTRA.- 400093
3		KAYCEE	KAYCEE INDUSTRIES LTD., C/O-CMS COMPUTERS LTD., 35A, REAR BLDG., KILOKARI, NEW DELH1-110014
4		L&T	32, SHIVAJI MARG, P.O. BOX- 6223, NEW DELHI-110015
5		SIEMENS	RC-IN I S NR DEL AREA, JIL BUILDING, TOWER-B, PLOT NO. 78, SECTOR 18, GURGAON-122015, INDIA
6		INDO ASIAN	B-24, PHASE - II , NOIDA - 201305, U.P.
7		M/s Philips	
1	RECEPTACLE (NON FLAME PROOF)	AJMERA INDUSTRIES & ENGG. WORKS	AJMERA INDL. AND ENGG. WORKS. AJMERA HOUSE, A-61 / KHAIRANE MIDC. , TTC INDL. AREA, NAVI MUMBAI – 400705.
2		CROMPTON GREAVES	3RD FLOOR, EXPRESS BUILDING,9-10, BAHADUR SHAH ZAFAR MARG, NEAR ITO CROSSING,NEW DELHI-110002, INDIA
3		CYCLO ELECTRIC DEVICE & SERV.CO.	: A-3, NEAR ANTHEM BIOSCIENCE, KSSIDC INDUSTRIAL AREA, BOMMASANDRA, BOMMASANDRA INDUSTRIAL AREA, BANGALORE, KARNATAKA 560099
4		BCH	20/4, MATHURA ROAD, FARIDABAD - 121006, HARYANA, INDIA
5		BEST & CROMPTON	BEST & CROMPTON ENGINEERING LTD 28C, AMBATTUR INDUSTRIAL ESTATE (NORTH) AMBATTUR, CHENNAI - 600 098
1	INDUSTRIAL/WELDING RECEPTACLES & BOXES	Schneider	Nasik
2		M/s sakthi & crown	chennai
3		AJMERA INDUSTRIES & ENGG. WORKS	AJMERA INDL. AND ENGG. WORKS. AJMERA HOUSE, A-61 / KHAIRANE MIDC. , TTC INDL. AREA, NAVI MUMBAI – 400705.
4		BCH	20/4, MATHURA ROAD, FARIDABAD - 121006, HARYANA, INDIA
5		Additionally any make's model with VDE or CE or UL or CSA marking or BIS approved with CML no (Refer note-1)	
1	RECEPTACLES - DECORATIVE	ANCHOR	STEEL HOUSE, B WING, PLOT NO. 24, MAHAL INDUSTRIAL ESTATE, MAHAKALI CAVES ROAD, NEAR PAPER BOX, ANDHERI (E), MUMBAI, MAHARASHTRA.- 400093
2		ELEXPRO ELECTRICALS PVT/ LTD.	C 1/27 & 37 GIDC KABILPORE NAVSARI-396424
3		BAJAJ ELECTRICALS	BAJAJ ELECTRICALS LTD. ENGINEERING & PROJECTS BU (NORTH) 3rd FLOOR, GULMOHARHOUSE,COMMUNITY CENTRE 161/B-4, GAUTAM NAGAR, YUSUF SARAI NEW DELHI – 110049
4		AJMERA INDUSTRIES & ENGG. WORKS	AJMERA INDL. AND ENGG. WORKS. AJMERA HOUSE, A-61 / KHAIRANE MIDC. , TTC INDL. AREA, NAVI MUMBAI – 400705.
1	EMERGENCY LIGHTING UNIT (FIXED & PORTABLE TYPE)- NON FLAME PROOF	BAJAJ ELECTRICALS	BAJAJ ELECTRICALS LTD. ENGINEERING & PROJECTS BU (NORTH) 3rd FLOOR, GULMOHARHOUSE, COMMUNITY CENTRE 161/B-4,GAUTAM NAGAR, YUSUF SARAI NEW DELHI – 110049
2		PROLITE AUTOGLO LIMITED,	PROLITE AUTOGLO LTD 25 SINGH INDUSTRIAL ESTATE NO. 3, RAM MANDIR ROAD., GOREGAON (W), MUMBAI, MAHARASHTRA 400104, INDIA

S.No.	ITEM DESCRIPTION	SUB-SUPPLIERS Name PROPOSED BY M/S BHEL	REMARKS
1	JUNCTION BOXES (NON FLAME PROOF)/Link Boxes/Test Link BOX/Adaptor Box (Galvanisation from NTPC approved sources listed in Annexure-I)	JASPER ENGNIREES PVT. LTD.	A-23, SECTOR - 8, NOIDA-201301
2		Electro Controls & Devices	M/S ELECTRO CONTROLS & DEVICES, F-41, SITE-C, SURAJPUR INDUSTRIAL AREA GREATER NOIDA, UTTAR PRADESH :201308
3		M/s Shrenik & Co.	39A/3, PANCHRATNA INDUSTRIAL ESTATE, SARKHEJ-BAVLA ROAD, CHANGODAR, AHMEDABAD – 382 213
4		M/s PHOENIX MECANO LTD.,	388 BHARE, TALUKA MULSHI, POST GHOTAWADE, PIRANGOOT, INDUSTRIAL AREA, PUNE-412115
5		Adroit Control Engineers Pvt.Ltd.	M/S ADROIT CONTROL ENGINEERS PVT.LTD. PLOT-3, KRISHNA INDL. AREA, SECTOR-25 FARIDABAD – 121004
6		MIKA ENGINEERS	BRANCH OFFICE : 'D'-101, DHEERAJ HERITAGE RESIDENCY II, SHASTRI NAGAR, SANTACRUZ (W), MUMBAI 400 054.
7		BAJAJ ELECTRICALS	BAJAJ ELECTRICALS LTD. ENGINEERING & PROJECTS BU (NORTH) 3rd FLOOR, GULMOHARHOUSE,COMMUNITY CENTRE 161/B-4, GAUTAM NAGAR, YUSUF SARAI NEW DELHI – 110049
8		AJMERA INDUSTRIES & ENGG. WORKS	AJMERA INDL. AND ENGG. WORKS. AJMERA HOUSE, A-61 / KHAIRANE MIDC. , TTC INDL. AREA, NAVI MUMBAI – 400705.
9		S.B. ELECTRICAL ENGINEERING CORPORATION	03, SARDAR GRIHA BUILDING, LOHAR CHAWAL, MUMBAI-400002
10		M/s Positronics	Vadodra
11		M/s Pyrotech	Udaipur
12		M/s Conquerent Control System Ltd	Manesar
13		M/s Jakson	Noida
14		M/s Switching Circuit	Kolkata
15		M/s Sarvana Switchgear	Bangalore
16		Any other BHEL approved sources with Galvanisation from NTPC approved sources listed in Annexure-I	
1	Junction Boxes-FRP/Thermosetting Plastic/Thermo Plastic	Sumip Composites	Ahmedabad
2		Kemrock	Vadodara
3		Ajmera	Mumbai
4		Trinity Touch	Palwal
5		Ercon Composites	Jodhpur
1	SWITCH BOX (Galvanisation from approved sources listed in Annexure-I)	ANCHOR	STEEL HOUSE, B WING, PLOT NO. 24, MAHAL INDUSTRIAL ESTATE, MAHAKALI CAVES ROAD, NEAR PAPER BOX, ANDHERI (E), MUMBAI, MAHARASHTRA.- 400093
2		ELEXPRO ELECTRICALS PVT/ LTD.	C 1/27 & 37 GIDC KABILPORE NAVSARI-396424
3		BAJAJ ELECTRICALS	BAJAJ ELECTRICALS LTD. ENGINEERING & PROJECTS BU (NORTH) 3rd FLOOR, GULMOHARHOUSE,COMMUNITY CENTRE 161/B-4,GAUTAM NAGAR, YUSUF SARAI NEW DELHI – 110049
4		AJMERA INDUSTRIES & ENGG. WORKS	AJMERA INDL. AND ENGG. WORKS. AJMERA HOUSE, A-61 / KHAIRANE MIDC. , TTC INDL. AREA, NAVI MUMBAI – 400705.
5		S.B. ELECTRICAL ENGINEERING CORPORATION	03, SARDAR GRIHA BUILDING, LOHAR CHAWAL, MUMBAI-400002
6		Any other BHEL approved sources with Galvanisation from NTPC approved sources listed in Annexure-I	
1	MAINTAINENCE LADDER/ ANCHOR/ EXPANSION BOLTS & FASTENERS	BHEL Approved Sources	
1	Occupancy Sensor	BHEL Approved Sources	
1	Dimmer Units & Passive Infra Red sensors	Lighting fixture supplier approved source	

S.No.	ITEM DESCRIPTION	SUB-SUPPLIERS Name PROPOSED BY M/S BHEL	REMARKS
1	CEILING FANS WITH REGULATORS/PEDESTAL FANS AND EXHAUST FANS	M/S CROMPTON	
2		M/S ORIENT	
3		M/S KHAITAN	
4		M/S POLAR	
5		M/S GEC	
6		M/S HAVELLS	
7		M/S BAJAJ	
1	Exit Sign	BHEL Approved Sources	
1	Hume Pipe	REPUTED MAKE	
1	Flexible Lead Coated Steel	PLICA India PVT Ltd	V.P.AGARWAL MANAGING DIRECTOR, PLICA INDIA PVT. LTD. 149, MODEL TOWN EAST GHAZIABAD - 201009
2		Bansal Labs	Bhopal
3		M/s Lapp	Germany
1	LIGHTING DESIGNER	AVAIDS TECHNOVATORS PVT. LTD.	4A/58, SHANKAR ROAD, NEW DELHI-110060 Mr. Rajendra Panda M: 9910481854 (email: rajendra@avaids.com)
2	LIGHTING DESIGNER	BAJAJ ELECTRICALS LTD.	801 (8th floor), Rustomjee Aspire, Bhanu Shankar Yagnik Marg, Off Eastern Express Highway Sion (E), Mumbai 400022 Mr. S. SREEMANY. SR. MANAGER (PROJECTS) CONTACT DETAILS : (+91) 9871025705. (email: srabans@bajajelectricals.com)
3	LIGHTING DESIGNER	KELSATEK SOLUTIONS PVT. LTD.	50/1 4TH FLOOR, CHURCH STREET, BANGALORE-560001 Mr. S S Mudaliar Sr. VP M: 6380471362 (email: mudaliar@kelsatek.com)
4	LIGHTING DESIGNER	M/s SUMANAM ENGINEERING SERVICES CONSULTANT	1, ADITHYA, KOWDIAR, TRIVANDRUM 695003 Mr. Anshad S Phone: 471-2437588, (email: shaw@sumanam.org)
5	LIGHTING DESIGNER	SPAN MANUFACTURING COMPANY LTD (Lighting System designer only for FGD, R&M and Hydro projects)	27 First Floor, Bhiku Building, Murari Ghag Marg, Prabhadevi, Mumbai-400025 Ms Surbhi Jindal M: 9811026321 (email: spanmanufacturing@gmail.com, info@dalighthub.com)
6	LIGHTING DESIGNER	CITELUM INDIA PVT. LTD (Lighting System designer only for FGD, R&M and Hydro projects)	Y-14A, GREEN PARK MAIN, NEW DELHI-110016 Mr. Satyabrata Meher M: 8155001095, (email: smeher@citelum.in)
7	LIGHTING DESIGNER	M/s SURYA ROSHNI LTD	Padma Tower 1, Rajendra Place, New Delhi–110008
Note:			
1	VDE/CE/UL/CSA marking for product quality: selef certification/ Valid certification from third party agency or BIS approval		
2	Make of items shall be subject to customer/BHEL, without any price implication.		

ANNEXURE-I to List of Make of Sub vendor items for Station Lighting System		
(LIST OF GALVANIZERS)		
SL. NO.	**Vendor Name**	Remarks
1	M/s M J Engg, Delhi	
2	M/s Jamna Metal Company, Delhi	
3	M/s A.V. Engg, Kolkata	
4	M/s Inar Profiles, Vishakapatnam	
5	M/s Anand Udyog, Mumbai	
6	M/s Techno Engg, Chandigarh	
7	M/s Steelite Engg, Mumbai	
8	M/s National Galvanizer Company,Kolkata	
9	M/s Unitstar Galvanizer, kolkata	
10	M/s B.P. Projects PVT LTD, Kolkata	
11	M/s Bajaj Pune	
12	M/s Electrocare Industries, Mumbai	
13	M/s B.G. Shirke Construction Technology Pvt. Ltd, Pune	
14	M/s Gurpreet Galvaniser, Hyderabad	
15	M/s Sigma Galvanising Pvt. Ltd.,Mumbai	
16	M/s Radhakrishnan Shetty, Chennai	
17	M/s Karamtara Mumbai	
18	M/s Poona Galvanizers Pune	
19	M/s Neha Galvaniser, Kolkata	
20	Unitech Galvaniser-Hoogley	
21	M/s DMP Projects Pvt.Ltd., Kolkata	
Additional galvanisers, if proposed by manufacturer through main contractor during detail engineering shall be reviewed & assessed by NTPC as per the merits of the case.		

PACKING SPECIFICATIONS- LIGHTING FIXTURES, LAMPS & MISC. ITEMS
ANNEXURE-D

PACKING

1. The material shall be packed to ensure protection against damage during transit, storage for prolonged periods and handling.

2. Lighting Fixtures, Lamps, Receptacles, Switchboards, 24V Supply modules, 24V sockets, Junction Boxes, Exit signs shall be clean and dry prior to packaging.

3. All items specified at sl. No.2 above shall be supplied in packed cartons. The tapes used for packing shall not bleed, leave residue, or damage the item when removed.

4. Fixtures & other lighting material shall be wrapped in weather proof material such as polythene sheets, air bubble sheets/ thermocol etc. The lighting fixtures shall be placed in a corrugated paperboard/ fibreboard container/ mono carton.

5. The mono cartons shall be wrapped or bagged or tied in place in master cartons. The master carton shall be taped and then wrapped with cushioning material.

6. The dimensions of cartons shall be as per manufacturer's recommendations.

7. For items like step ladder, wheel mounted ladder and flexible conduits, packing shall be as per manufacturer standard.

Note: In case Manufacturer has a different packing standard which is equivalent or better same to be submitted for approval during contract stage.

ANNEXURE-E

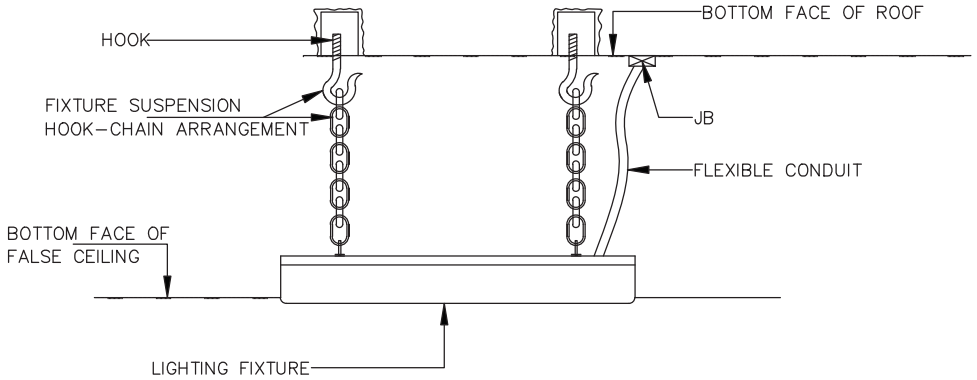

FALSE CEILING AREAS
TYPE-A

This is aTypical mounting arrangement dwgs/ details for guidance only. Final Mounting arrangment dwg shall be made by the successful bidder during detailed Engineering. It is to be noted that GI Conduit 20mm Dia shall be provided by BHEL. Balance all other accessories clamps/ chains/ clips/ steel rope/ pins etc required for mounting as per typical mounting arrangement for their fixtures shall be part of fixtures only and shall be provided by the Bidder.

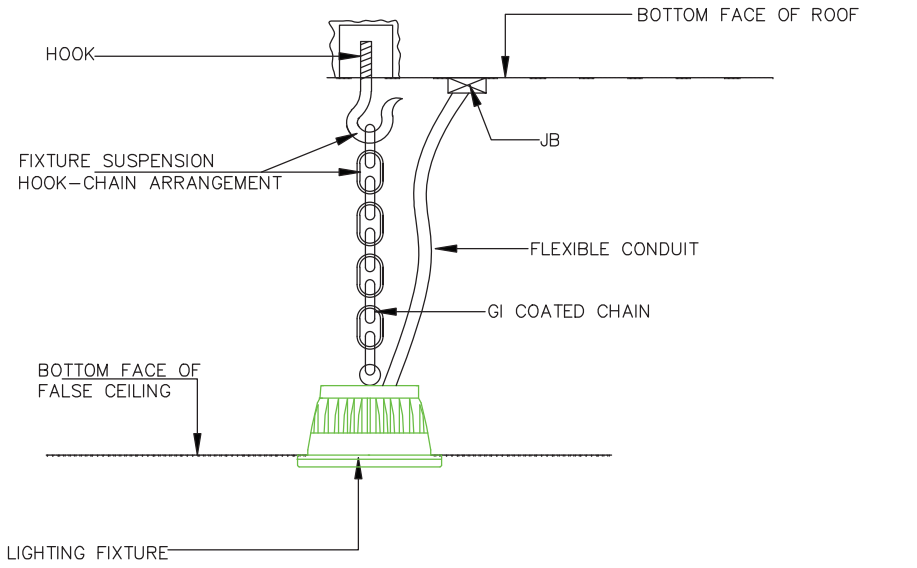

TYPE-A
DOWNLIGHTER

2. In Lighting layout, Mounting arrangement also shown. If any Descrepency found on both documents than Consult with Design incharge/Site Incharge.
3. Quantity and Material shown in drawings are indicative only and may be change or vary as per site requirement.
4. If any new type of mounting required at site than we can optimized or change the arrangement with prior inform to BHEL site incharge.
5. All structural steel parts/supporting parts shall be hot dip galvanized as per BOQ/TS.

SIZE–A4

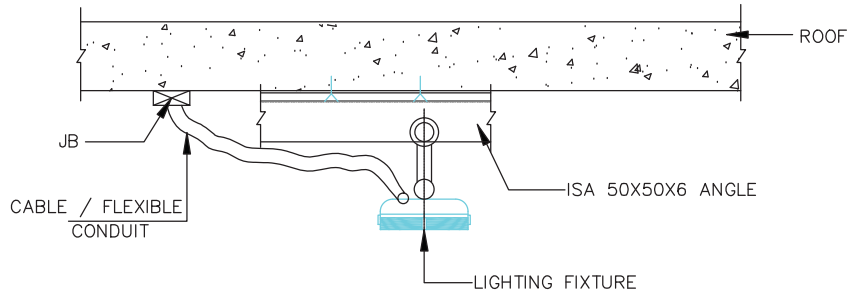

CEILING MOUNTING
TYPE-O

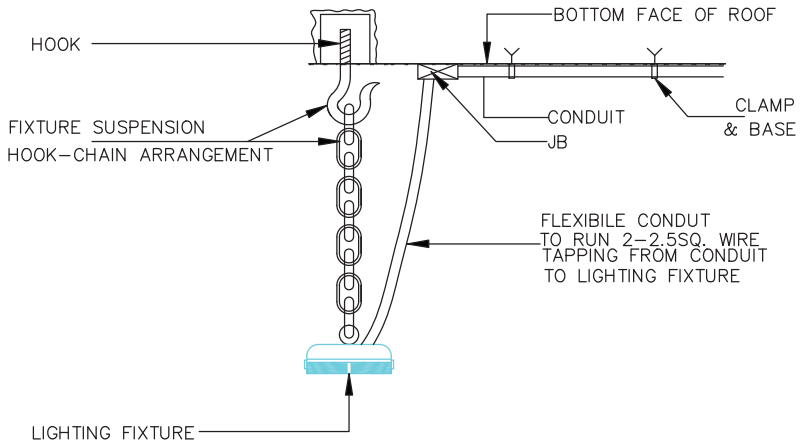

CEILING MOUNTING
TYPE-O

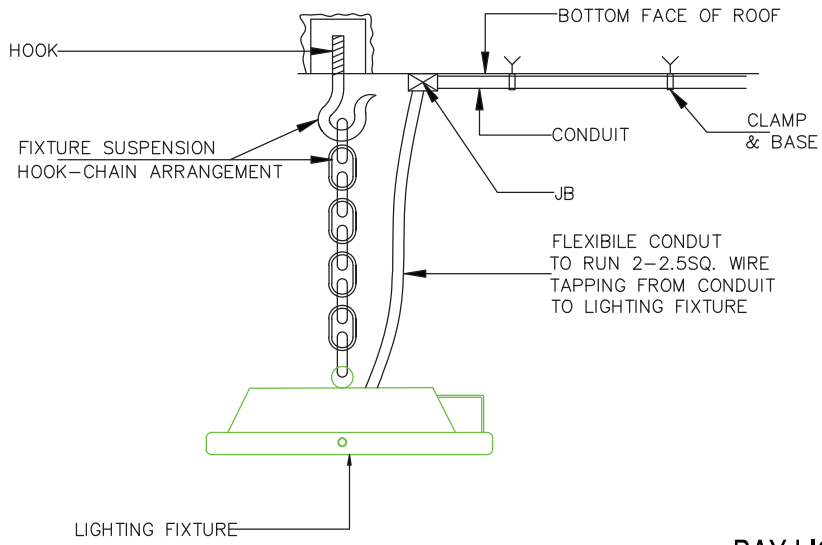

CEILING MOUNTING
TYPE-O

BAY LIGHT

General Notes:
1. Mounting arrangement can be changed/ modified on site as per site requirements.
2. In Lighting layout, Mounting arrangement also shown. If any Descrepency found on both documents than Consult with Design incharge/Site Incharge.
3. Quantity and Material shown in drawings are indicative only and may be change or vary as per site requirement.
4. If any new type of mounting required at site than we can optimized or change the arrangement with prior inform to BHEL site incharge.
5. All structural steel parts/supporting parts shall be hot dip galvanized as per BOQ/TS.

SIZE–A4

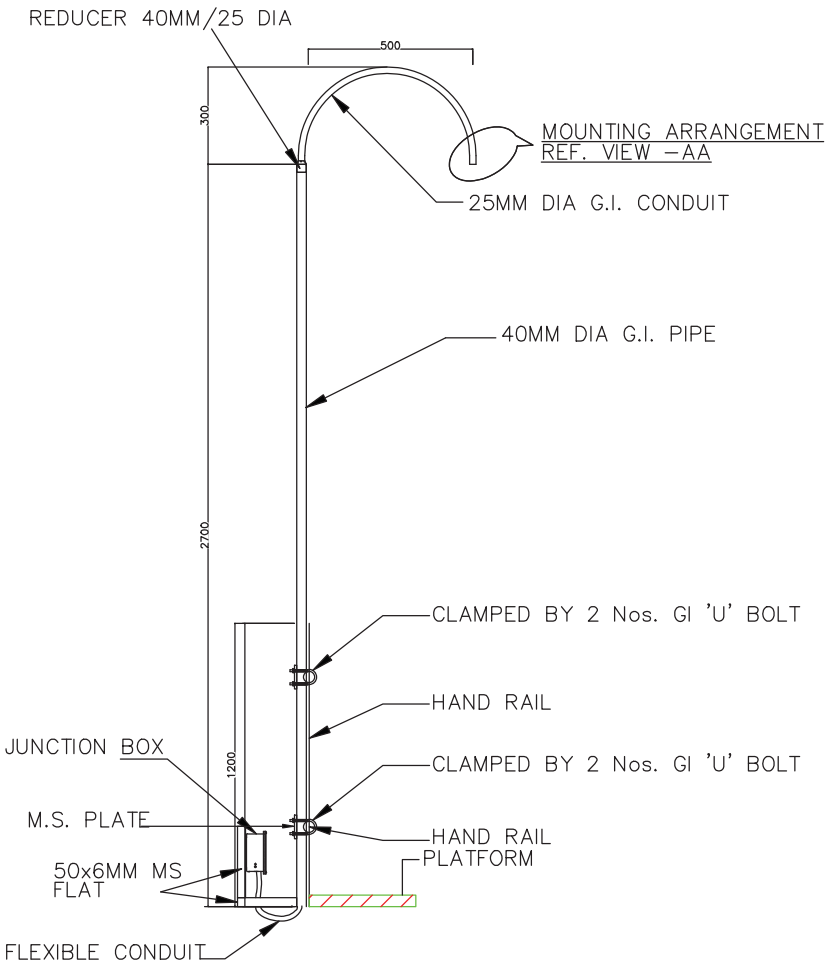

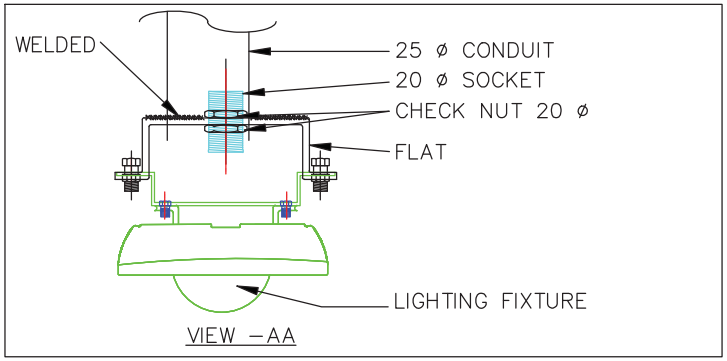

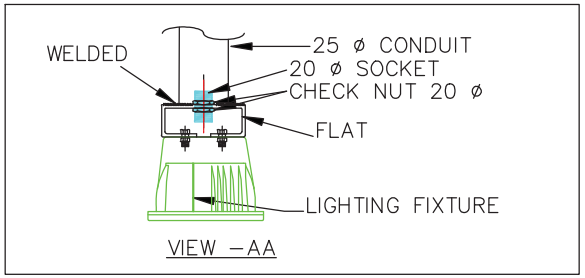

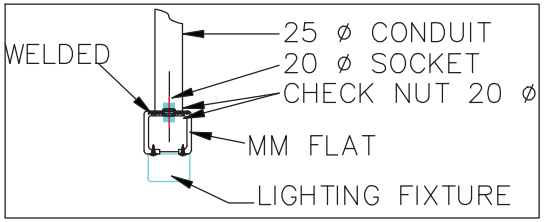

HAND RAIL MOUNTING TYPE-I

General Notes:

1. Mounting arrangement can be changed/ modified on site as per site requirements.
2. In Lighting layout, Mounting arrangement also shown. If any Descrepency found on both documents than Consult with Design incharge/Site Incharge.
3. Quantity and Material shown in drawings are indicative only and may be change or vary as per site requirement.
4. If any new type of mounting required at site than we can optimized or change the arrangement with prior inform to BHEL site incharge.
5. All structural steel parts/supporting parts shall be hot dip galvanized as per BOQ/TS.

SIZE–A4

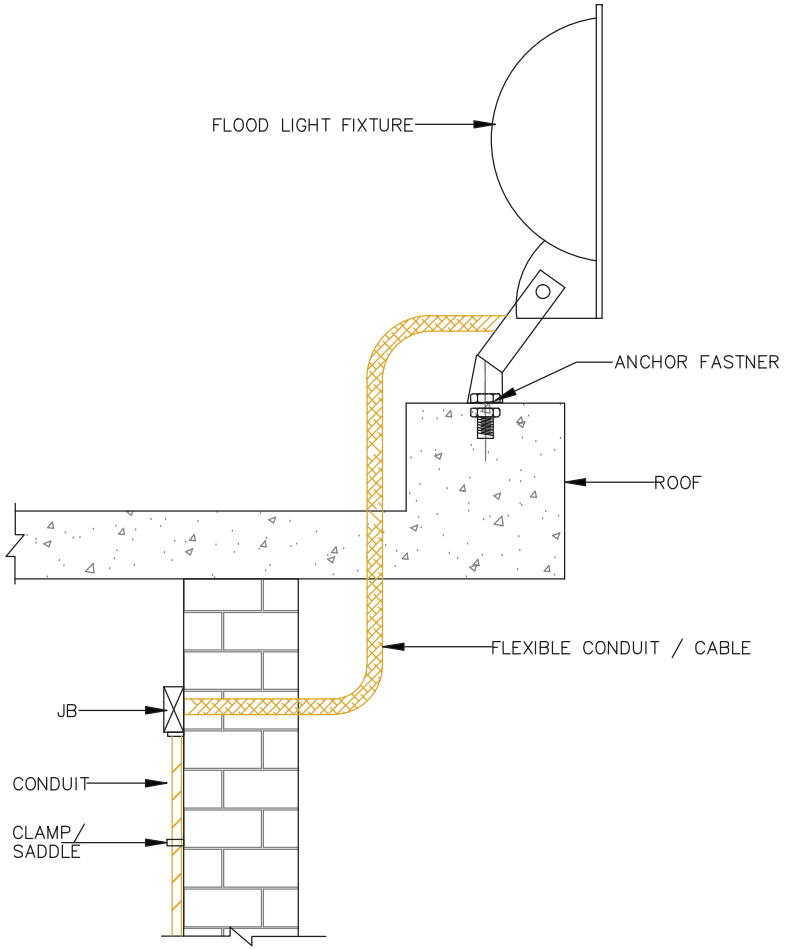

ROOF MOUNTING
TYPE-P

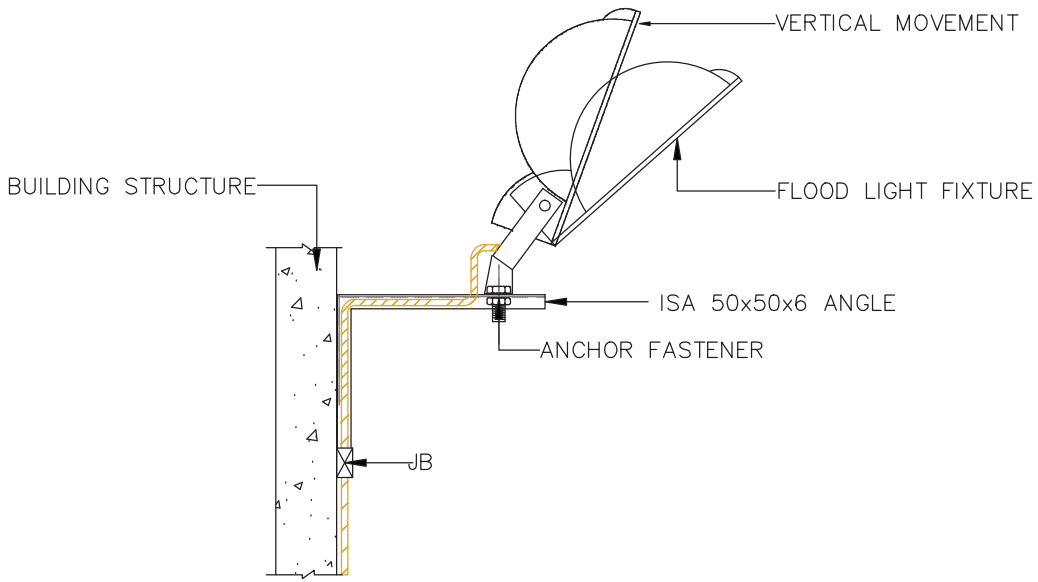

COLUMN MOUNTING
TYPE-Q

General Notes:
1. Mounting arrangement can be changed/ modified on site as per site requirements.
2. In Lighting layout, Mounting arrangement also shown. If any Descrepency found on both documents than Consult with Design incharge/Site Incharge.
3. Quantity and Material shown in drawings are indicative only and may be change or vary as per site requirement.
4. If any new type of mounting required at site than we can optimized or change the arrangement with prior inform to BHEL site incharge.
5. All structural steel parts/supporting parts shall be hot dip galvanized as per BOQ/TS.

SIZE–A4

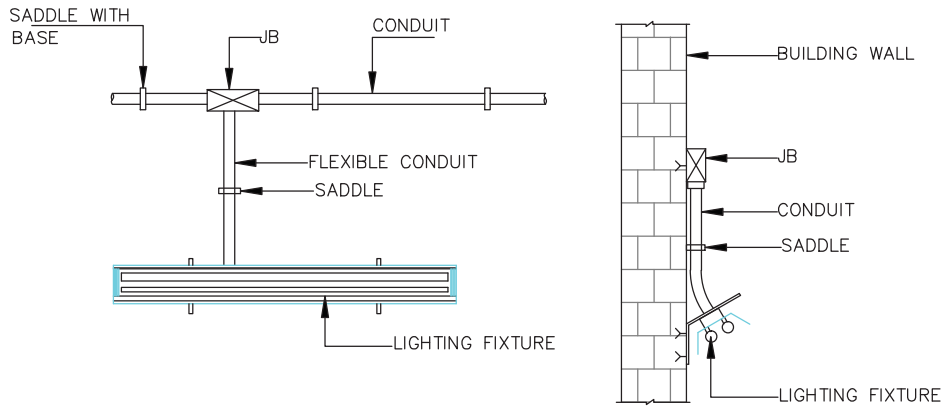

TYPICAL MOUNTING DETAIL OF WALL MOUNTED, TYPE-D

END VIEW

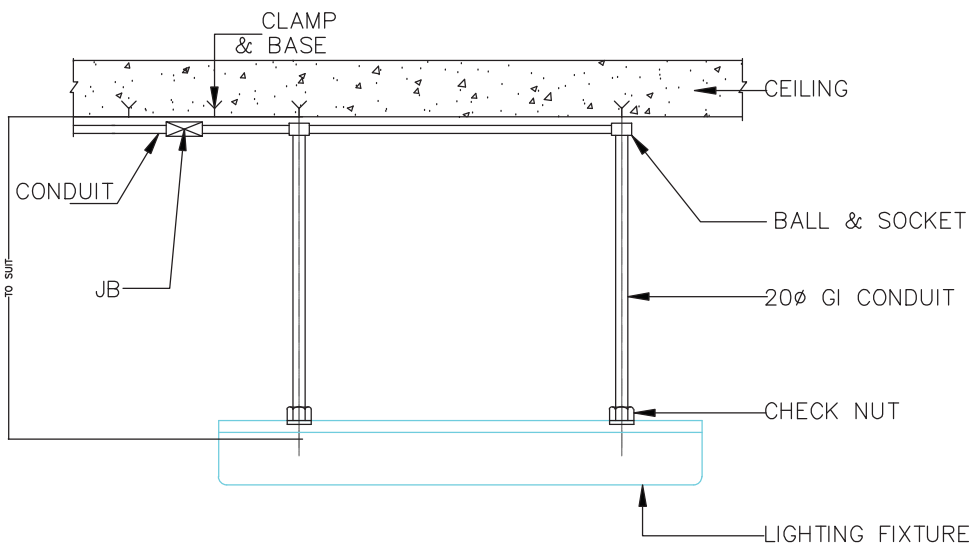

TYPICAL MOUNTING DETAIL OF SUSPANDED, TYPE C

General Notes:

1. Mounting arrangement can be changed/ modified on site as per site requirements.
2. In Lighting layout, Mounting arrangement also shown. If any Descrepency found on both documents than Consult with Design incharge/Site Incharge.
3. Quantity and Material shown in drawings are indicative only and may be change or vary as per site requirement.
4. If any new type of mounting required at site than we can optimized or change the arrangement with prior inform to BHEL site incharge.
5. All structural steel parts/supporting parts shall be hot dip galvanized as per BOQ/TS.

SIZE–A4

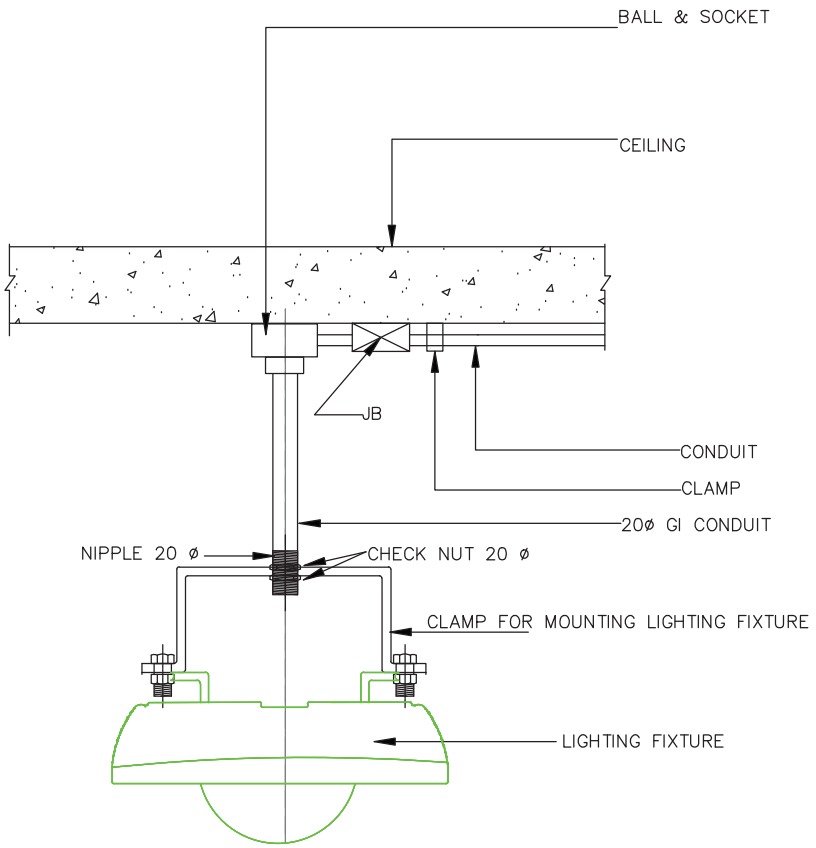

SUPPORTED FROM CEILING
TYPE-F

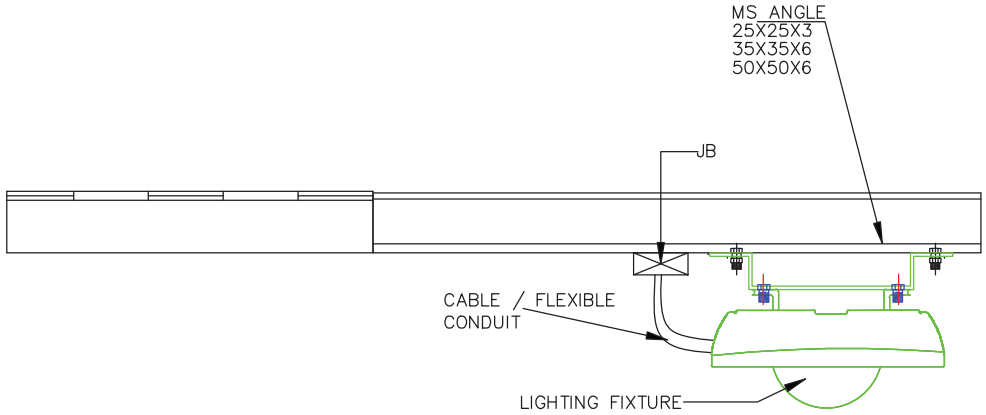

SUPPORTED FROM CHANNEL/
STRUCTURAL STEEL
TYPE-G

General Notes:
1. Mounting arrangement can be changed/ modified on site as per site requirements.
2. In Lighting layout, Mounting arrangement also shown. If any Descrepency found on both documents than Consult with Design incharge/Site Incharge.
3. Quantity and Material shown in drawings are indicative only and may be change or vary as per site requirement.
4. If any new type of mounting required at site than we can optimized or change the arrangement with prior inform to BHEL site incharge.
5. All structural steel parts/supporting parts shall be hot dip galvanized as per BOQ/TS.

SIZE–A4

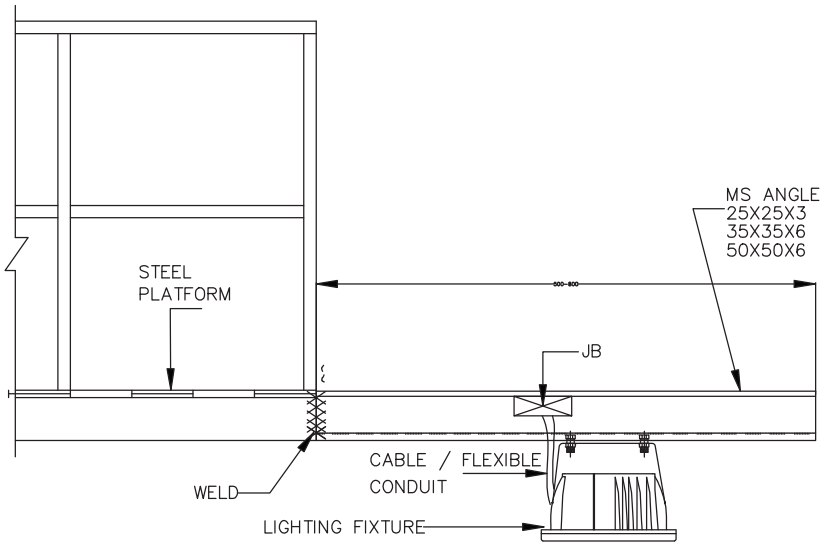

TYPE-G

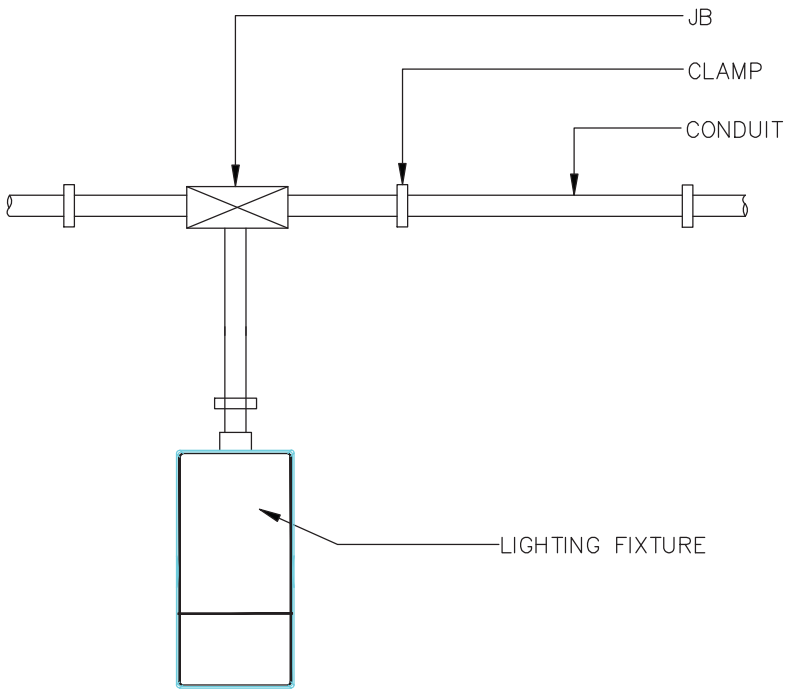

WALL MOUNTING
TYPE-H

General Notes:

1. Mounting arrangement can be changed/ modified on site as per site requirements.
2. In Lighting layout, Mounting arrangement also shown. If any Descrepency found on both documents than Consult with Design incharge/Site Incharge.
3. Quantity and Material shown in drawings are indicative only and may be change or vary as per site requirement.
4. If any new type of mounting required at site than we can optimized or change the arrangement with prior inform to BHEL site incharge.
5. All structural steel parts/supporting parts shall be hot dip galvanized as per BOQ/TS.

SIZE–A4

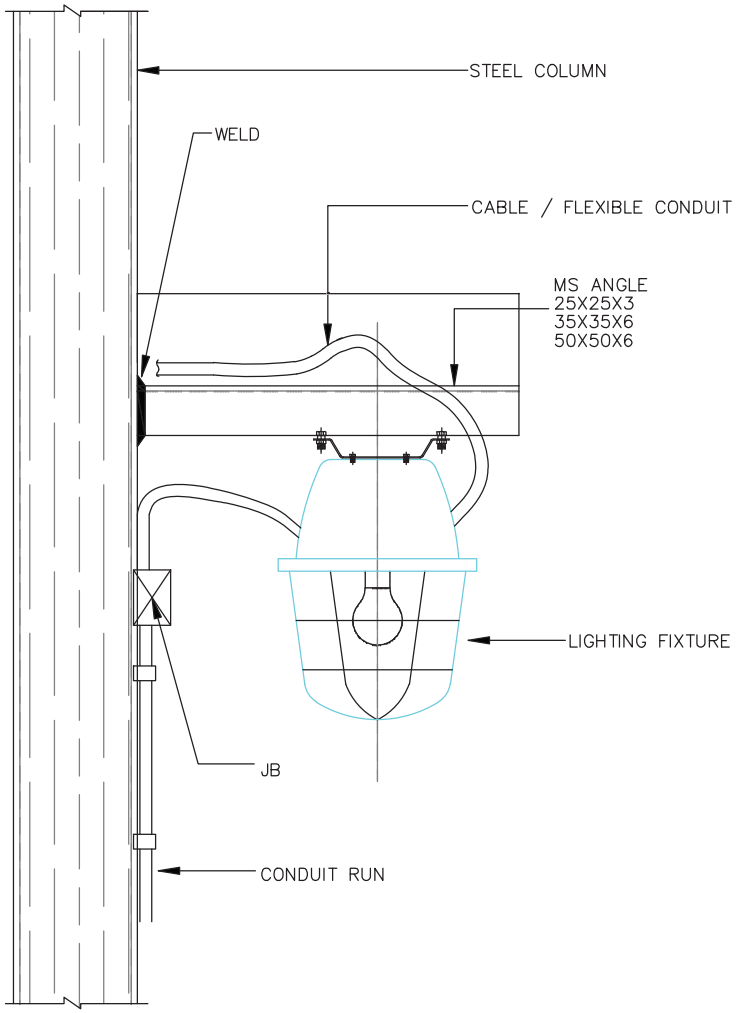

COLUMN MOUNTING
TYPE-M

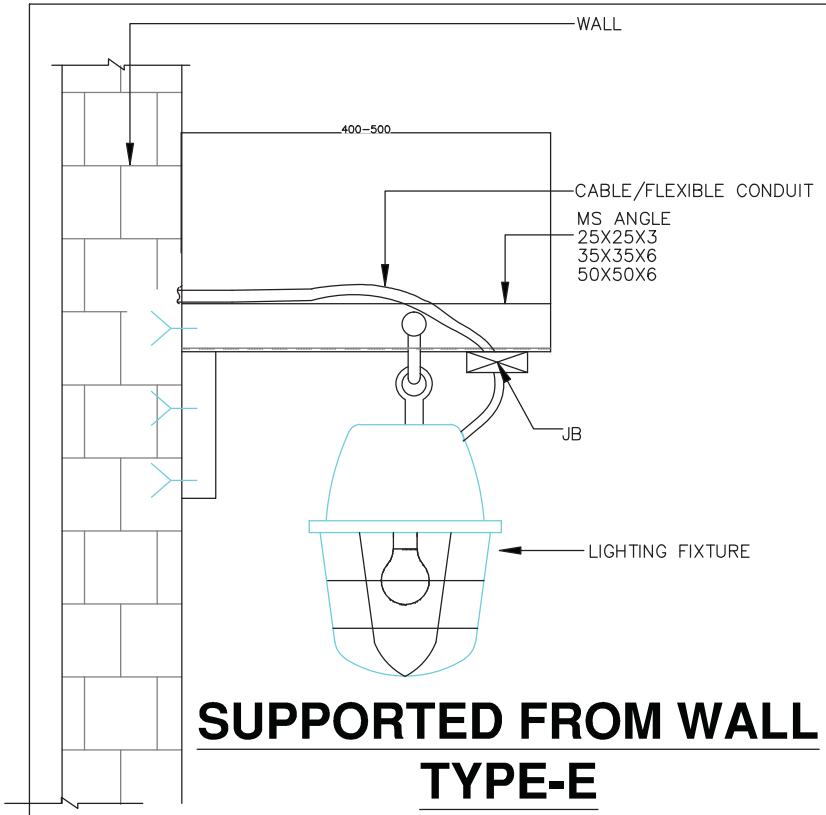

SUPPORTED FROM WALL
TYPE-E

General Notes:

1. Mounting arrangement can be changed/ modified on site as per site requirements.
2. In Lighting layout, Mounting arrangement also shown. If any Descrepency found on both documents than Consult with Design incharge/Site Incharge.
3. Quantity and Material shown in drawings are indicative only and may be change or vary as per site requirement.
4. If any new type of mounting required at site than we can optimized or change the arrangement with prior inform to BHEL site incharge.
5. All structural steel parts/supporting parts shall be hot dip galvanized as per BOQ/TS.

SIZE-A4

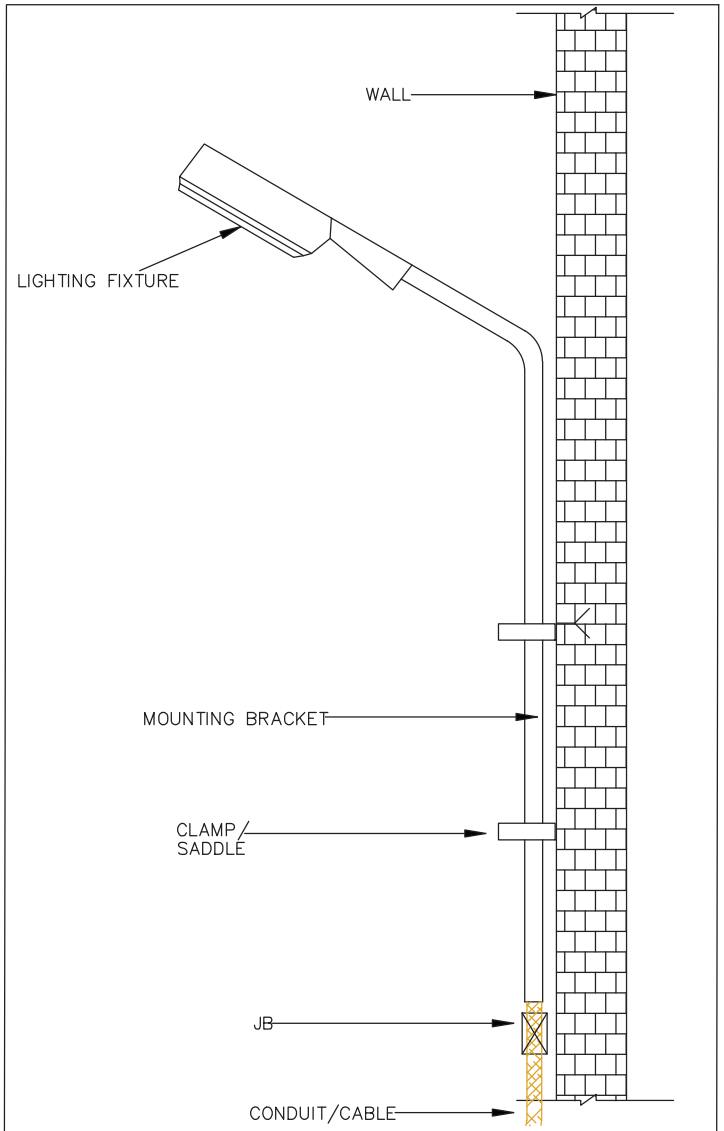

WALL MOUNTING
TYPE-T

General Notes:

1. Mounting arrangement can be changed/ modified on site as per site requirements.
2. In Lighting layout, Mounting arrangement also shown. If any Descrepency found on both documents than Consult with Design incharge/Site Incharge.
3. Quantity and Material shown in drawings are indicative only and may be change or vary as per site requirement.
4. If any new type of mounting required at site than we can optimized or change the arrangement with prior inform to BHEL site incharge.
5. All structural steel parts/supporting parts shall be hot dip galvanized as per BOQ/TS.

SIZE–A4

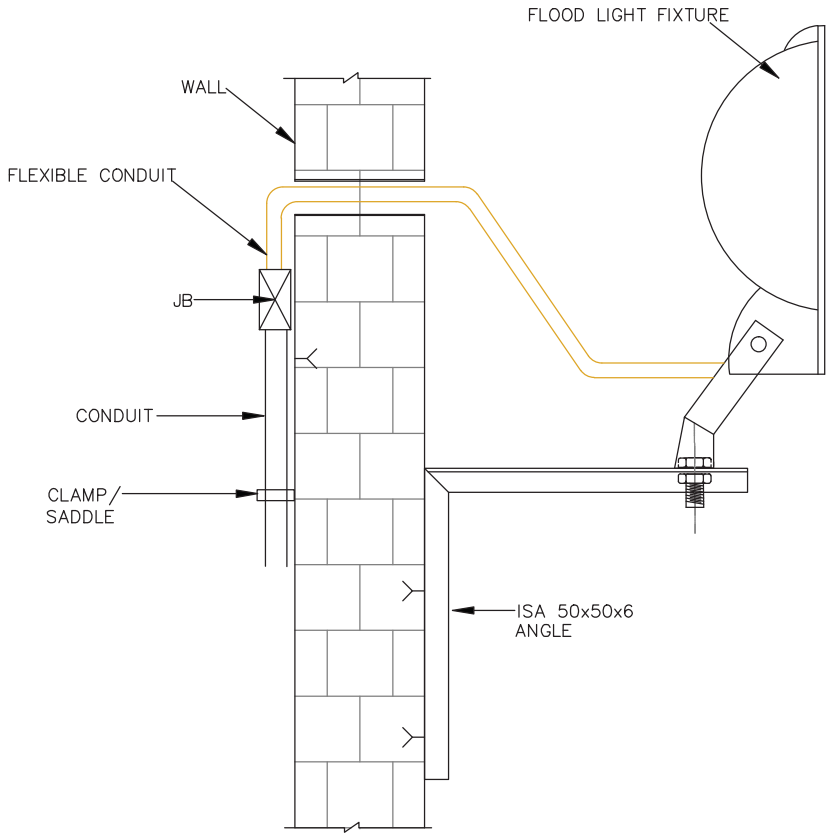

WALL MOUNTING
TYPE-R

General Notes:

1. Mounting arrangement can be changed/ modified on site as per site requirements.
2. In Lighting layout, Mounting arrangement also shown. If any Descrepency found on both documents than Consult with Design incharge/Site Incharge.
3. Quantity and Material shown in drawings are indicative only and may be change or vary as per site requirement.
4. If any new type of mounting required at site than we can optimized or change the arrangement with prior inform to BHEL site incharge.
5. All structural steel parts/supporting parts shall be hot dip galvanized as per BOQ/TS.

SIZE–A4

SECTION – II

STANDARD TECHNICAL REQUIREMENTS

TECHNICAL SPECIFICATION FOR

LIGHTING FIXTURES, LAMPS & MISCELLANEOUS ITEMS

CONTENTS

CLAUSE	DESCRIPTION
1.0	INTENT OF SPECIFICATION
2.0	CODES & STANDARDS
3.0	LIGHTING SYSTEM DESCRIPTION (CONCEPTUAL VIEW)
4.0	SYSTEM DESIGN ENGINEERING
4.1	ENGINEERING INPUTS
4.2	DESIGN CRITERIA
4.3	ENGINEERING OUTPUTS
5.0	LUMINAIRES, ACCESSORIES AND LAMPS
5.1	GENERAL REQUIREMENTS OF LUMINAIRES
5.2	LUMINAIRE & OTHER ITEMS
5.3	CONTROLGEAR BOX (NON-INTEGRAL TYPE)
5.4	REFLECTORS
5.5	LAMP HOLDERS
5.6	STARTER HOLDERS
5.7	BALLASTS
5.8	STARTERS
5.9	CAPACITORS
5.10	LAMPS
5.11	JUNCTION BOXES
5.12	RECEPTACLES
5.13	CEILING FANS & REGULATORS
5.14	LIGHTING CONTROL SWITCHBOXES
5.15	CABLE GLANDS
5.16	CABLE LUGS
5.17	FLEXIBLE METALLIC CONDUITS AND FITTINGS
5.18	PVC CONDUITS
6.0	SURFACE TREATMENT
7.0	PACKING
8.0	GUARANTEED PERFORMANCE REQUIREMENTS
9.0	INSPECTION & TESTING
10.0	SPARES
11.0	TOOLS & TACKLES
12.0	DOCUMENTATION

1.0 INTENT OF SPECIFICATION

1.1 The requirements given in specification for supply of equipment and system design engineering shall be fully complied with.

1.2 For the equipment of supply in vendor's scope, the "design" shall broadly cover the selection of components, materials, sizes etc. and complete responsibility of establishing the correctness of equipment design rests with the vendor.

1.3 It is not the intent to specify herein all details of design and manufacture. However, the equipment shall conform in all respects to high standards of design, engineering and workmanship, and shall be capable of performing required function in a manner acceptable to Purchaser, who will interpret the meaning of drawings and specifications and shall be entitled to reject any work or material, which in his judgement is not in full accordance herewith.

1.4 Make of all equipment and components shall be to the approval of Purchaser. Bidder to comply to Sub-vendor list enclosed as Annexure to Section I, however same shall be subjected to end client approval without any commercial implication.

2.0 CODES & STANDARDS

2.1 The material shall comply with all currently applicable safety codes and statutory regulations of India as well as of the locality where the material is to be installed.

2.2 The material, construction, manufacture, inspection and testing shall conform to the latest revisions of standards as specified in Data Sheet-A.

2.3 In case of conflict between the applicable reference standard and this specification, stringent requirement shall govern.

3.0 LIGHTING SYSTEM DESCRIPTION (CONCEPTUAL VIEW)

3.1 All areas of plant (indoor and outdoor) shall be provided with suitable lighting arrangement to meet the functional requirements by use of various types of luminaires so as to achieve the desired quality and level of illumination.

3.2 Lighting system shall also cover the low voltage power services such as power receptacles and single phase feeders.

3.3 Lighting system shall be fed through various power sources such as AC Normal, AC Emergency and DC Emergency supply to achieve the desired reliability.

3.4 Power tapped from various sources to be distributed through lighting distribution boards and lighting panels upto luminaires and power outlet sockets / feeders.

4.0 SYSTEM DESIGN ENGINEERING

Engineering shall be done by the vendor only during the contract engineering stage as the same is covered in his scope. During tender stage, bidder shall make his quotation on the basis of BOQ furnished by the purchaser with the tender document.

4.1 **ENGINEERING INPUTS** : Complete engineering shall be done by the vendor on the basis of documents listed below. The engineering inputs shall be furnished by purchaser. However, furnishing of these inputs shall not absolve the vendor of responsibility to visit site and get acquainted with actual site conditions.

4.1.1 Indoor Areas

a) Room dimensions (details as covered in various layout drawings)

b) Lighting System Design Data (LSDD) covering typical values for various types of indoor areas, indicating :
   i. Required average illumination level
   ii. Reflection factors for walls, ceiling and floor
   iii. Maintenance factor
   iv. Type of luminaire
   v. Mounting height of luminaire
   vi. Height of working plane
c) AC Emergency lighting requirements
d) DC lighting requirements
e) Requirement of sockets
f) Requirement of exhaust fans and fan points

4.1.2 Outdoor Areas

a) Area geometry (details as covered in various layout drawings)
b) Lighting System Design Data (LSDD) covering typical values for various types of outdoor areas, indicating:
   i. Average illumination level
   ii. Type of luminaire
   iii. Pole heights / mounting height
   iv. AC Emergency lighting requirement
   v. DC lighting requirements
   vi. Maintenance factor
c) Requirement of sockets

4.1.3 Other inputs

a) Plot plan, Main equipment plan and TG hall floor plans (to assess quantum of area lighting drawings)
b) Suggestive location of LDBs
c) Suggestive power distribution scheme (SLDs)
d) Control schemes
e) Single phase feeder details
f) No. of sockets / criteria for computation of no. of sockets / location of sockets etc.
g) LDB/WDB details
h) LP details
i) Poles & Masts details
j) Conduit sizes
k) Wire sizes
l) Earthing material sizes

4.2 DESIGN CRITERIA:

4.2.1 General Requirements of Design

a) Lighting system shall be provided to ensure adequate visual performance, safety and reliability and shall be free from excessive glare and flicker from discharge lamps.

Particular attention shall be paid to ensure that level of illumination is satisfactory in all respects including viewing of all instruments, alarms, annunciations and indicating lamps.

b) Complete system design shall be done on the basis of inputs provided by the purchaser and in line with the laid down criteria.

c) Requirements of sockets shall be as per the criteria / number of sockets given by the purchaser during detailed engineering stage.

d) Complete power distribution system to be designed keeping following criteria :
   - Simplicity
   - Controlled voltage drop
   - Cost effectiveness

4.2.2 Sources of Power Supply

a) The illumination of various indoor and outdoor areas in the main plant and off site areas shall comprise of one or more of the following systems:
   - Normal AC Lighting System
   - Emergency AC Lighting System
   - DC Lighting System

b) Arrangement and distribution of power shall depend upon the functional requirements of areas and therefore supply from all types of power sources shall not be made available to all areas. Lighting & LV power services in different areas shall be provided as per Annexure-B enclosed.

c) 24V AC lighting for maintenance purposes (for hand lamps and/or hand operated tools) shall be supplied from 240/24V fixed/ portable lighting module.

4.2.3 Lighting philosophy

a) Normal AC Lighting System

Normal AC lighting system 415V, 3 phase, 4 wire, will be fed from lighting panels (LPs) which in turn will be fed from the lighting distribution boards (LDBs). Street lights/ flood lights shall be fed from Street Lighting Panel (SLP), Welding receptacles shall be fed from Welding DB/ MCC in offsite areas.

b) Emergency AC Lighting System

This system shall be provided for certain important areas in the main plant. The lighting fixtures connected to this system shall be normally "ON" along with the normal AC system. These will be fed from emergency lighting panels (ELPs) which in turn will be fed from 3-phase, 4-wire supply from the emergency lighting distribution boards (ELDB'S). These lights will go off for a few seconds in case of AC supply failure at Emergency Switchgear, but shall be automatically restored when Emergency Switchgear is energized by Diesel generator set.

c) DC Lighting System

At strategic locations in main plant, a few lighting fixtures fed from 220V DC supply, shall be provided to enable safe movement of operating personnel and access to important control points during an emergency, when both the normal AC and Emergency Lighting system fail. These lighting fixtures will be fed from 220V DC LPs which in turn will be fed from DC LDBs.

Supply to DC lighting panels shall be automatically switched ON in case of loss of AC supply at station service switchgear as well as Emergency switch-gear. DC supply will be

automatically switched OFF after about 3 minutes following the restoration of supply to normal AC or emergency AC lighting system.

In auxiliary /off site buildings, emergency DC lighting is to be provided through self-contained DC emergency fixture at strategic locations. The fixtures shall be switched 'ON' automatically in case of failure of AC supply.

d) Street Lighting/ Flood Lighting

Street lights / flood lights will be fed from Street Lighting Panel (SLP). The number of street lights / flood lights shall be grouped in such a way that they will be fed from the nearest SLP available. Street lights shall have provision of automatic switching ON and OFF in any one of the following modes and as per the purchaser's scheme:

i. Manual

ii. Automatic through 00 - 24 hrs time switch

iii. Automatic through combination of 00 - 24 hrs time switch and a remote sensing device for monitoring external illumination level. Each SLP shall be provided with a time switch and a remote light sensing device.

4.2.4 Number of Luminaires

a) Calculations to be done as per input data covered under "Engineering Inputs".

b) Total number of AC luminaires for indoor and outdoor areas shall be calculated on the basis of point to point method by an established computer program. Optimisation criteria shall form part of street lighting calculations.

For AC emergency lighting, specified percentage of total AC luminaires shall be considered as AC emergency luminaires. The percentage shall be informed during detail engineering.

4.2.5 Layout Considerations

a) General Layout Considerations

i. Layout of equipment such as LDBs and LPs shall be on the basis of following criteria
- Ease of operation
- Maintainability
- Aesthetics

ii. Luminaires shall be located to meet the functional requirements of the area. Aesthetics shall form part of layout considerations.

iii. Due considerations shall be given to the mounting arrangement depending upon location and type of area.

iv. While preparing lighting system layout drawings for air conditioned control rooms/areas having false ceilings, vendor shall interface with the Air Conditioning / Ventilation Duct layout and false ceiling layout drawings to avoid fouling / interference.

v. The poles shall be located 1.5m away from the road edge. The buried cable shall run in hume pipe / duct bank wherever it is crossing the roads.

vi. 240V AC, 5/15A universal socket (at least two number) shall be provided in office, store, cabin etc. The receptacles shall be provided at interval of 20m or part thereof for hand tools etc. One no. 20A, 240V AC industrial type receptacle shall be provided at suitable location in all other area as required. The receptacles shall be controlled through switch/MCBs. In hazardous area, receptacles shall be flame proof.

vii. Suitable nos. of 63A/125A, 3 phase, 415V industrial receptacle with switch shall be provided at specific points in power plant area for welding purposes.

viii. All fans including pedestal fans shall comply to relevant IS.

b) Conduit System

i. Unless indicated otherwise, conduits shall originate from respective lighting panels and shall continue upto the luminaires for all indoor areas.

ii. Conduits shall run in straight runs, parallel to building columns, walls etc. as far as practicable.

iii. Unnecessary bends and crossings shall be avoided.

iv. In the corrosive environment, conduit installations shall be made with corrosion proof conduits. Such requirements shall be clearly indicated while preparing BOQ.

v. Conduits in control room and other air-conditioned areas shall be surface mounted on the roof above false ceiling. However vertical drops of conduits shall be through column flanges or grooved to the wall, finally covered for better aesthetics.

c) Wiring

i. Each circuit from LP shall be taken in a separate conduit.

ii. Wiring of AC normal, AC emergency & DC emergency lighting system shall be carried out in separate conduits.

iii. Receptacle wiring shall be distinct from lighting conduits. No two phase circuits shall be run in the same conduit. However different circuits of same phase may be laid in the same conduit.

iv. Maximum three nos. of receptacles shall be loop-in & loop-out in a circuit.

v. Filling area of wires in conduit shall not exceed 40% of the conduit area.

vi. Wiring shall be done with following conductor sizes:
- Luminaires – 2.5 sq. mm
- 5A plug & socket – 2.5 sq. mm
- 5/15A and 20A plug & socket – 4 sq.mm

vii. Wiring shall be designed for the uniformly distributed spread of luminaires on each phase i.e. R,Y,B. Distribution of luminaires on these phases shall be such so that there is generally uniform light intensity in the event of failure of one or two phases.

viii. Luminaires located in offices, stores, laboratories, toilets etc. shall be individually or group controlled.

d) Cabling

i. Cables shall be considered wherever it is not desirable to run the insulated wires due to long runs or for any other valid reason.

ii. Cable Schedule shall be prepared for all cable connections.

4.3 ENGINEERING OUTPUTS:

Vendor shall prepare and submit following documents and drawings for purchaser's approval :

a) Lighting calculations for indoor areas covering details such as room dimensions (length, width, height), illumination level, reflection factors (walls, ceiling, floor), maintenance factor, type of luminaire, mounting height of luminaire, room index, coefficient of utilisation, no. of luminaires (AC Normal & AC Emergency), lumen output of each luminaire, reference drawings and remarks.

b) Lighting calculations for outdoor areas covering average illumination level, type of luminaire, chart for illumination level at various points in the area; location (coordinates), number and height of poles; type, number (normal + emergency) and orientation of luminaires etc. Calculated values of average and minimum illumination level as obtained through computer package shall also be furnished. Dot density plots for lux level shall be furnished if available in computer package.

c) Single line diagrams of power distribution upto Lighting Panels. Separate drawing for complete lighting distribution shall also be prepared by vendor.

d) Load on each phase of LP & LDB with consideration of diversity factor for socket

e) Layout drawings for each indoor area indicating location of luminaires, sockets, fan points, exhaust fans, LDBs and LPs. Details of type of luminaires, source of power supply (AC Normal, AC Emergency, DC Emergency). Bill of Material shall also be covered which shall include unit wise requirements of luminaires and other items.

f) Layout drawing of each outdoor area indicating location of poles/ towers, orientation of luminaires, socket and LP. Details of pole height / mounting height, type of luminaires, source of power supply (AC Normal, AC Emergency, DC Emergency). Bill of Material shall also be covered for various types of luminaires.

g) Conduit layout drawing with wiring and load distribution detail as superimposed on area layout drawing indicated above. Drawing to include BOM for conduits, wires etc.

h) Wiring and load distribution details for outdoor areas.

i) Master Bill of Material (to be submitted at regular intervals of engineering progress) including all items required for complete lighting system viz. lighting fixtures, lamps, Lighting DB, Welding DB, lighting panel, conduits, PVC wires etc.

j) In case of revised inputs or site feedback, preparation and submission of revised engineering outputs shall also be in the scope of vendor.

k) Calculation for selection of number and size of containers

l) Packing procedures and drawings.

5.0 LUMINAIRES, ACCESSORIES AND LAMPS

5.1 GENERAL REQUIREMENTS OF LUMINAIRES

a) All luminaires and accessories shall be designed for continuous operation and shall be suitable for the system design data given in Data Sheet A.

b) Luminaires shall be complete with accessories mounted inside the luminaire assembly. Lamps shall be supplied separately as per BOQ.

c) All luminaires and accessories shall be suitable for operation in the atmospheric conditions prevailing at site.

d) Power factor for fluorescent lamp luminaires shall be 0.9 or more and that for HPMV/ HPSV luminaires shall be 0.85 or more. Power factor correction capacitors shall be provided for this purpose.

e) Luminaires shall be designed for minimum glare. No bright spots should appear from the lamp or from the reflectors.

f) All accessories shall be wired upto a terminal block or a separate weather proof metallic terminal box suitable for 2.5 sq. mm. copper wire termination.

g) All internal wiring shall be of PVC or silicon rubber insulation, capable of withstanding the maximum temperature to which it will be subjected under specified service conditions without deterioration.

h) All luminaires and accessories including breathing holes shall be vermin proof.

i) Surface Treatment:

- All surfaces after manufacture shall be thoroughly cleaned and degreased. Pre-treatment of surfaces shall be as per the applicable standard. Pretreated surfaces shall be free from rust, sharp edges, scales and burrs.

- Finish of surfaces shall be non-porous, smooth and unfaded.

j) All metal parts of the luminaires shall be bonded and connected to the earthing terminal. Earthing terminal shall be suitable for connecting 14 SWG GI wire.

k) Flood lights shall be provided with base frame / base plate for mounting on structural steel members / wall.

l) All weather proof luminaires shall have the control gear housed in a weather proof enclosure with necessary gaskets, mounting bracket, locking screws etc.

5.2 LUMINAIRE TYPES & OTHER ITEMS

a) Channel Mounted Luminaires (Fluorescent Luminaires)

- Channel mounted luminaire except special purpose luminaire shall have CRCA sheet steel base plate/ rail/ channel /box /side panels /housing as per "Luminaire Details".
- Twin fluorescent luminaire shall be wired in lead-lag circuit to minimise stroboscopic effect
- Luminaires suitable for surface mounting shall also be suitable for pendant mounting. Knockouts of 20mm ET conduit fixation shall be provided for this purpose.

b) Industrial Fluorescent Luminaires (General Purpose)

- Additional reflectors, wherever provided, shall be easily removable type.

c) Industrial Fluorescent Luminaires (Special Purpose)

- Luminaires for chemical vapour (acidic / alkaline) laden environment shall be of cast aluminium control gear box and end boxes. Control gear housing shall have detachable, one piece neoprene gasket cover to make it weather proof. Design shall be suitable for chemically charged environment.
- Luminaires for corrosive and dust laden environment shall be made of tray type sheet steel housing and transparent acrylic visor supported by a galvanised sheet steel frame, fitted to the housing with gasket all around. Cable entry shall be from the side of luminaire. Luminaire shall be totally dust and vapour proof.
- Luminaire for highly corrosive environment shall have sheet aluminium/ polycarbonate housing control gear housing, CRCA sheet steel control gear tray with stove enamelled white reflector. Clear acrylic cover of dish shape, secured to canopy by stainless steel toggle and neoprene gasket lining shall be provided at bottom
- Luminaires for drip proof environment such as street lighting fluorescent luminaire shall have sheet aluminium canopy, a detachable reflector-cum-control gear housing, clear ribbed acrylic cover held in aluminium frame. Luminaire shall have the degree of protection IP:55 unless mentioned otherwise in Data Sheet A. Luminaire shall be suitable for side entry mounting with the pole bracket arm.

d) Bay Type Luminaires

- Luminaires shall be designed for following indoor applications:
  i) High bay
  ii) Medium bay
  iii) Low bay
- Luminaires shall have top mounted, cast aluminium control gear housing. Housing may have cooling fins and canopy for easy access to the components. Canopy shall be hinged at one end and wing screw bolted at the other end.

- Lamp housing for dust laden environment shall be totally enclosed type. A clear toughened glass cover may be attached to lamp housing with aluminium frame and neoprene gasket. Luminaire may be provided with a safety chain for toughened glass.
- Mounting arrangement shall consist of MS bracket with anti-vibration eye-bolt

e) Well Glass Luminaires

- Well glass luminaire shall be suitable for dust and vapour laden environment.
- Luminaires shall be provided with a die-cast aluminium canopy and heat resistant well glass, fitted with a ring type gasket.
- Integral control gear box where applicable shall be of die cast aluminium material with one piece neoprene gasket between box and cover to make it dust and vapour proof.

f) Flame Proof Well Glass Luminaires

- Housing material shall be cast aluminium alloy LM6. Housing outer surface shall be provided with cooling fins.
- Flame proof luminaires shall be provided with heavy toughened well glass cemented in a retaining ring.
- Zinc-coated / chrome-plated MS chain connected to the main body and glass retaining ring shall be provided.
- A detachable terminal box at the top shall be provided.
- Neoprene gaskets, where needed, shall be provided for weather proof construction and indoor and outdoor application.
- Two cable entries of 20mm ET conduit shall be provided with one flame proof plug
- Luminaires shall be suitable for hazardous areas as classified in Data Sheet A. Design of flame proof luminaire shall be supported by the type test report for flame proof from government approved laboratory

g) Street Lighting Luminaires (Other than Fluorescent Luminaire)

- Luminaires suitable for street lighting and general purpose outdoor area lighting.
- Luminaire housing shall be pressure die cast with toughened glass
- Provision shall be made for adjustment of lamp location for proper focussing.
- Luminaires shall be suitable for mounting with pole bracket arm.

h) Flood Lighting Luminaires

- Flood light lamp housing and reflector shall be separate from control gear box. Requirements of control gear box are specified elsewhere.
- Lamp reflectors shall be of high purity spun aluminium attached to the cast aluminium lamp holder housing at the rear. Lamp holder housing shall be provided with cooling fins.
- Reflector shall be closed from the front by heat resistant toughened glass and synthetic “S” type weather proof gasket.
- Luminaire shall be provided with special lamp centering and focussing device ensuring good beam control.

- MS mounting bracket shall allow fixation of flood light in any position in horizontal plane and flood light can be locked in at any set angle in vertical plane. Cast iron base and/or two protector scales shall also be provided where specified in "Luminaire Details"
- Design shall permit replacement of lamp from the rear without disturbing the previously set aiming angles. Special guide pins shall also be provided for protecting the lamps from damage while replacing.

i)LED type Luminaires:

- LED Luminaires shall be used for lighting if specified in BOQ as part of NIT
- In false ceiling area LED luminaires shall be recessed mounting type & in non-false ceiling area the LED luminaires shall be surface mounting type.
- The individual lamp wattage for LED shall be upto 3 watt.
- LED chip efficacy shall be min 120 Lm/W. Luminaire efficacy shall be not less than 90 Lm/W.
- The LED used in the luminaires shall have colour rendering index (CRI) of Min 65. Colour designation of LED shall be "cool day light" (min 5700K) type.
- The LED luminaire shall have minimum life of 25,000 burning hours with 80% of lumen maintenance at the end of the life.
- The beam angle for LED chip shall be 120 degrees.
- The max. junction temperature of LED shall be 85 deg C, further the lumen maintenance at this temperature shall be min 90%.
- The THD of LED Luminaires shall be less than 10%. Further the EMC shall be as per IS 14700. The power factor of the luminaire shall not be less than 0.9.
- Marking on luminaire & safety requirements of luminaire shall be as per IS standards.
- Suitable heat sink with proper thermal management shall be designed & provided in the luminaire.
- The connecting wires used inside the system, shall be low smoke halogen free, fire retardant PTFE cable.
- Fuse protection shall be provided in input side specifically for LED luminaires.
- Care shall be taken in the design that there is no water stagnation anywhere. The entire housing shall be dust and water proof protection as per IS 12063.
- Driver Circuit: LED modules and drivers shall be compatible to each other. The LED module driver's ratings and makes shall be as recommended by corresponding LED manufacturer. LED Drivers may have following control & protections:
  - Suitable precision current control of LED.
  - Open Circuit Protection
  - Short Circuit Protection
  - Over Temperature Protection
  - Overload Protection

j) **Emergency Lighting Luminaires**

- The luminaire shall be automatic having in-built battery.
- Battery shall have integral charging unit.
- Charger shall be suitable for operation as per system design data.

- The battery enclosure shall be suitably painted and ventilated for the performance with sealed lead acid battery, as applicable.

5.3 CONTROLGEAR BOX (NON-INTEGRAL TYPE)

a) Boxes shall have weatherproof construction and shall be provided with one piece neoprene gasket.

b) Boxes shall be provided with HRC fuse mounted on removable tray. Boxes shall be provided with all necessary components having a neat layout arrangement such that it is possible to test, inspect or replace any component without difficulty.

c) Boxes shall be suitable for mounting on structures, walls and columns.

d) Suitable number of terminals shall be provided for looping-in and looping-out of cable connections and also connections to the luminaire(s).

e) Cable / conduit knock-outs shall be for each loop-in and loop-out connection and also connection to the luminaire(s).

5.4 REFLECTORS

a) Reflectors shall be made of sheet steel or aluminium as applicable.

b) The aluminium reflectors shall be made of high purity aluminium sheet. Sheet will be polished, electrochemically brightened and anodised.

c) Wherever reflectors are separate from housing, they shall be securely attached to the luminaire by means of easily accessible fastening devices such that they are readily removable from the housing for maintenance.

5.5 LAMP HOLDERS

a) Holders shall be resistant to wear and shall be smooth in operation.

b) Contacts shall be of durable quality.

c) Holders shall hold the lamp under condition of shock and vibration.

d) Lamp holder for fluorescent lamp to be spring loaded, bi-pin, rotor type with low contact resistance

e) Live parts of the holder shall not be exposed when the lamp is inserted or removed in case of fluorescent luminaires.

f) Lamp holders for HPMV & HPSV lamps shall be of porcelain material.

g) Holders shall be screw type for HPSV & HPMV lamps.

5.6 STARTER HOLDERS

a) Starter holder shall be designed and manufactured as per applicable standard.

5.7 BALLASTS

a) Fluorescent fixtures shall have electronic ballasts. Ballasts shall be totally enclosed type, free from humming and easily removable type.

b) Core shall be made of low loss, electrical grading stampings.

c) End connection to be made available in terminal block rigidly fixed to ballast enclosure

d) Ballast shall be provided separately for each lamp in a multi-lamp luminaire.

e) Tapings to be provided to set voltage within range for HPMV & HPSV luminaires

5.8 STARTERS

a) Starters shall be made of aluminium material. Plastic or any other material if used shall be subject to purchaser's approval.

b) Starter shall be replaceable without the use of any tool and without disturbing any accessory or lamp.

c) Starters shall have bi-metal electrodes, brass contacts, high mechanical strength.

d) Starters shall be provided with radio interference suppressing capacitors.

5.9 CAPACITORS

a) Capacitor to have constant value of capacitance, suitable for operation at supply voltage

b) Capacitors shall be hermetically sealed, preferably in a metal enclosure to prevent seepage of impregnant and ingress of moisture.

5.10 LAMPS

a) Lamps shall be suitable for use in any position.

b) Lamps shall be capable of withstanding small vibrations without breakage to filaments / electrodes and lead-in wire.

5.10.1 Type of Lamps

a) Fluorescent Lamp

i. Anode rings shall be provided to prevent blackening of the ends.

ii. Lamp caps shall be two pin type at each end.

b) Mercury Vapour Lamps

i. Lamp caps shall be screw type.

c) Sodium Vapour Lamps

i. Lamps shall be ovoid shaped with diffusing powder coating.

ii. Lamps shall be provided with external igniters and rapid restart facility.

iii. Lamp caps shall be screw type.

5.11 JUNCTION BOXES

a) Junction boxes with terminals shall be supplied for branching and terminating lighting wires/cables whenever required, as specified.

b) Construction Features

i. Junction box to be fabricated out of material & thickness as specified in Datasheet-A and shall be of rectangular shape. The cover shall be hinged or bolted with captive nuts and bolts and shall be provided with neoprene gasket lining all over.

ii. Junction boxes to be provided with suitable knock outs/ gland plates for conduit/ cable connection. Conduit connection to be properly sealed. JB meant for cable connection shall be complete with removable gland plate, gland and cable lug as required. JB to be provided with two earthing terminals suitable for GI earthing wires.

iii. Boxes and cover shall be hot dip galvanised. JB for corrosive area to have additional epoxy/acrylic coating of thickness not less than 50microns on outer surface.

iv. JB shall be suitable for mounting on wall, columns, etc. The brackets, bolts, nuts, screws and any other erection accessories required for erection shall be included.

c) Terminals

i. Multiway terminal block of approved type and make complete with galvanised screw, nuts, washers and marking strips to be furnished for terminating lighting wires

ii. Terminals blocks shall be of 650V grade one piece construction with insulating barriers. Terminals shall be made of copper alloy and stud type. Each terminal provided on junction box shall be suitable for terminating two numbers of aluminium conductors of size as specified without any damage to the conductors or looseness.

d) The junction boxes shall be of following types:

Type	Description
JB-F	Provided with four (4) way stud type terminals for terminating upto 2 nos. 10 mm^2 stranded aluminium conductors on each terminal, suitable for outdoor installations.
JB-FE	Same as above but with an additional epoxy coating of 50 micron thickness.
JB-S	Provided with four (4) way stud type terminals, each terminal suitable for terminating upto two nos. of 3.5Cx50 mm^2 stranded aluminium conductors & with one no.6A HRC fuse and link.

5.12 RECEPTACLES

a) Receptacle unit shall consist of socket outlet with associated switch and plug. The socket outlet and switch shall be flush mounted on a box which shall be suitable for mounting on wall or steel structures.

b) Receptacle boxes shall be fabricated from material with thickness mentioned in Data Sheet A.

c) Steel boxes shall be hot dip galvanised/ painted as specified in Datasheet-A and as per the requirements of applicable standard corresponding to the sheet thickness.

d) The boxes shall have conduit knock-outs and shall be suitable for cable entry of the size to be specified by purchaser during detailed engineering.

e) Box to be provided with neoprene rubber gasket to make it moisture and dust proof

f) Suitable loop-in and loop-out terminals shall be provided inside the box. Terminals for incoming and outgoing shall be suitable for size of cable conductor

g) The receptacle units shall be of the following types:

I. Type RB: It shall have the following:

i. 20A, 240V, 1-phase, 2 pole, 3-pin (third pin scrapping earth) porcelain, metal clad socket with a metallic cover tied to it.

ii. Rotary, heavy duty 20A switch conforming to applicable standard.

iii. Shrouded, die-cast aluminium plug.

iv. It shall be combined interlocked weather proof industrial unit.

v. Mechanical interlock shall be provided as follows :
- Switch can be put ON only when plug is fully engaged.
- Plug can be withdrawn only when switch is in OFF position.
- Cover can be opened only when switch is in OFF position.

vi. The arrangement should ensure that water do not enter plug when socket is ON.

vii. Loop-in loop-out terminal to be provided inside box suitable for 10 mm^2 Al conductor

II. Type RA: It shall have the following:

i. Combination of 5A & 15A, 240V, 1-phase, 2 pole, 3-pin, third pin grounded socket with integral piano key type 15A switch, flush mounted on decorative backelite (6 mm thick)/ perspex (3 mm thick) sheet as cover of the boxes.

ii. Loop-in loop-out terminal similar to type RA to be provided. These will be located in office areas

III. Type RC: It shall have the following:
   i. 63A, 415V, 3-phase-neutral earth, metal clad socket with cover
   ii. Rotary, heavy duty 63A switch conforming to applicable standard.
   iii. Shrouded, die-cast aluminium plug
   iv. It shall be combined, interlocked weather proof industrial unit.
   v. Mechanical interlock shall be same as that are applicable for RA type receptacles
   vi. Receptacle boxes shall be suitable for entry and exit of 3.5CX70 mm2 Al conductor PVC cable and loop-in loop-out terminals for the same to be provided such that not more than one core is terminated at one terminal. Removable undrilled cable gland plate to be provided. Tinned copper lugs and double compression cable glands shall also be supplied by the bidder.

IV. Type RD: It shall have the following:
   i. 125A, 415V, 3-phase-neutral earth, metal clad socket with cover.
   ii. Rotary, heavy duty 125A switch conforming to applicable standard.
   iii. Shrouded, die-cast aluminium plug
   iv. It shall be combined, interlocked weather proof industrial unit.
   v. Mechanical interlock shall be same as that are applicable for RC type receptacles
   vi. The receptacle boxes shall be suitable for entry and exit of 3.5CX95 mm2 Al conductor PVC cable and loop-in loop-out terminals for the same shall be provided such that not more than one core is terminated at one terminal. Removable, undrilled cable gland plate shall be provided. Tinned copper lugs and double compression cable glands shall also be supplied by the bidder.

V. Type RE: It shall have the following:
   i. 5A, 240V, 1-phase, 2 pole, 3-pin, third pin grounded socket with integral piano key type 5A switch, flush mounted on decorative bakelite (6 mm thick)/ perspex (3 mm thick) sheet as cover of the boxes.
   ii. Loop-in loop-out terminals similar to type RA shall be provided. These will be located in office areas.

5.13 CEILING FAN & REGULATORS

a) The bidder shall supply the following ceiling fans complete with suspension rod, canopy and accessories and regulators:
   i. 1200 mm sweep
   ii. 1400 mm sweep

b) The fan motor shall be totally enclosed. The motor winding shall be of copper wire provided with double or reinforced class-E insulation.

c) Fan to have three (3) well balanced blades. Precaution to be taken in manufacture of fan as well as regulators to ensure reasonable degree of silence at all speeds.

d) Regulator with minimum five steps shall be electronic type with smooth control.

5.14 LIGHTING CONTROL SWITCH-BOXES

a) Switchbox shall be of bent steel construction, fabricated of 14 SWG thick MS sheet with 6 mm thick decorative bakelite sheet cover. Boxes shall be hot dip galvanised.

b) Switch-boxes shall be suitable for surface mounting as well as flush mounting in brick walls and flush mounted in walls in office area with false ceiling provision

c) Switch-boxes shall have conduit knock-out on two sides. Adequate provision shall be made for ventilation of these boxes. Conduit knock-out sizes shall be as per conduit layout drgs.

d) Switches shall be of piano-key type having quick-make, quick-break mechanism, provided with position marking, suitable for mounting on insulating plate. Switches shall be suitable for 1-phase, 240V, 50 Hz supply and conform to relevant standards. Switches shall be supplied loose and shall be fixed at site according to requirement.

e) All components housed in the switch-boxes shall be wired to an outgoing junction box by 1.5 mm2 Cu wire. The junction box shall have adequate nos. of terminals.

f) Size of switch-boxe shall be adequately chosen to accommodate the no. of switches and fan regulator boxes specified below. Fan regulators shall be supplied separately.

i. Type SWB1 - 3 nos. 6A switch and 1 no. 6A receptacle, JB type SW1

ii. Type SWB2 - 3 nos. 6A switch, 1 no. 6A receptacle and 1 no. fan regulator, JB type SW2

iii. Type SWB3 - 7 nos. 5A switches, 3 nos. fan regulator, JB type SW3.

JB details for lighting control switch boxes are as below:

JB-SW1 Provided with four (4) way stud type terminals, each terminal suitable for terminating upto two nos. of 10 mm^2 stranded aluminium conductor.

JB-SW2 Similar to the JB-SW1 but provided with ten (10) way terminals.

JB-SW3 Similar to the JB-SW1 but provided with eighteen (18) way terminals.

5.15 CABLE GLANDS

a) Whether specifically mentioned or not, cable glands of suitable sizes shall be supplied along with each equipment for power and control cables.

b) Rubber components used in the gland shall be of neoprene.

c) Name / trade name of manufacturer, type no. and applicable range of outer diameter of cable shall be engraved / indelibly printed on the cable gland.

5.16 CABLE LUGS

a) All equipment shall be supplied with the power and control cable lugs of suitable size, whether specifically mentioned or not.

b) Name/trade name and size of lug to be engraved/ indelibly printed on each cable lug

5.17 FLEXIBLE METALLIC CONDUITS AND FITTINGS

a) Flexible metallic conduits shall generally conform to the requirements of IS:3480.

b) Flexible conduits shall be made of strip steel, which shall be of cold rolled mild steel. The strip shall be of uniform width and thickness throughout.

c) The strip for making flexible conduit shall be wound tightly and so overlapped in subsequent helicals that no openings are seen in normal position.

d) The surface of the strip shall be thoroughly cleaned before application of protective coating. Pre-treatment, before galvanization, shall conform to IS:6005.

e) Strip shall be electro-galvanized minimum thickness of 25 micron as per IS 3480

f) Flexible conduits shall be lead coated for application in high temperature zones if specifically mentioned in Data Sheet A.

g) The conduit shall have uniform diameter throughout its length. The internal surface of all conduits shall be free from burrs and sharp edges and suitable for pulling insulated cables and wires without damage.

5.18 PVC CONDUITS

PVC conduits shall generally conform to requirements of IS: 9537(Part I & Part III).

6.0 SURFACE TREATMENT

6.1 All metal parts and the surfaces (exterior & interior) of equipment, unless stated otherwise in case of reflectors, shall be degreased by dipping in hot alkaline solution and rubbed with wire brush to remove oil & scale from them & then rinsed in water. Alternatively, they may be shot / sand blasted.

6.2 Parts shall be pickled by dipping in hydrochloric acid tank to remove rust from surfaces formed during storage of sheets & then rinsed to remove traces of the acid. The cleaning and pre-treatment of all metal parts shall be as per applicable standard.

6.3 The surfaces to be painted shall then be prepared by phosphatizing to protect them from further rusting & to create a good bond with the paint. The pre-treatment shall conform to the applicable standard.

6.4 All parts shall then be subjected to a coat of red oxide primer paint.

6.5 All inside and outside surfaces of panel shall be spray painted with synthetic enamel of the shade as per Data Sheet A.

6.6 Electrostatic or powder painting shall be acceptable subject to purchaser's approval.

6.7 Wherever possible, finished parts shall be coated with peelable compound by spraying method to protect the finished product from scratches, grease, dirty and oily spots during handling and transportation.

7.0 PACKING

7.1 Vendor shall furnish packing procedure along with packing drawing at contract stage for applicable items for purchaser approval.

7.2 Containers adequate for storing 70% of P.O. quantity material at site are to be supplied. Vendor shall furnish suitable justification to purchaser during detailed engineering for the number and size of containers being supplied.

8.0 GUARANTEED PERFORMANCE REQUIREMENTS

8.1 The vendor shall guarantee satisfactory performance of the equipment supplied under all conditions and requirement as laid down by this specification.

8.2 Vendor to ensure satisfactory performance of lighting system designed by them at site

9.0 INSPECTION & TESTING

9.1 Bidder shall confirm compliance to BHEL Standard Quality Plan (PE-QP-999-558-E006) without any deviation. Equipment which are not covered in the Quality Plan shall be tested as per QP to be submitted by bidder. In case bidder has reference QP agreed with ultimate customer, same can be submitted for specific project after award of contract for BHEL/ Customer's approval. There shall be no commercial implication to BHEL on account of any changes in QP during contract stage.

9.2 All components and completely assembled equipment to be tested as per latest standard. Charges for these tests shall be deemed to be included in equipment price

9.3 All the specified type and routine tests shall be carried out to verify the rating and performance of the equipment. Where valid type test certificates in evidence of equipment performance claimed are available & approved by purchaser, the requirements for conducting type tests may be waived. The general arrangement of object under test shall be to purchaser's approval.

9.4 Manufacturing processes viz. machining, sheet forming, electroplating, wire routing, cleating & crimping, assembly, surface preparation shall conform to good manufacturing practices

9.5 Inspection for dimensional & visual checks especially of the following, with respect to contract drawings, documents & standards shall be conducted:

a) General sturdiness & rigidity of equipment
b) Surface finishing
c) Gasketting
d) Inter-changeability
e) Constructional features viz. location, accessibility & marking of components, segregation, accessibility to live parts (shrouding) etc.
f) Completeness of scope

9.6 Equipment shall be liable for rejection if tolerance on values of dimension, power consumption, impedance, temperature rise etc. exceed specified values by purchaser and / or standards.

10.0 SPARES

10.1 Mandatory spares (if applicable) are indicated in BOQ-cum-price schedule.

10.2 Erection & commissioning spares are included in the bidder's scope of supply. BE&C spares are indicated in BOQ-cum-price schedule.

10.3 A list of recommended O&M spares quantities for duration of 3 years shall be filled up in the applicable schedule / format and submitted by bidder along with offer. However, the acceptance of the same shall not be binding on purchaser.

11.0 TOOLS AND TACKLE

11.1 Tools & tackle which are essential to facilitate assembly, adjustments, erection, maintenance & dismantling of equipment to be provided as part of equipment supplied

11.2 The above tools shall be supplied along with the initial consignment of equipment so as to be available prior to erection but may not be used for erection purposes.

11.3 Vendor shall also submit a list of recommended tools and tackle. Acceptance of these tools and tackle shall not be a binding on the purchaser.

11.4 Schedule of tools & tackle shall be filled up by bidder.

12.0 DOCUMENTATION

12.1 Documents to be submitted by the vendor immediately after award of contract

a) Bar chart of activities of manufacture, testing, inspection and despatch.

12.2 Documents to be submitted during detailed engineering of contract

12.2.1 Engineering documents (refer clause 4.3) to be generated by vendor, if applicable.

a) Lighting calculations for indoor areas.
b) Lighting calculations for outdoor areas.
c) SLD of power distribution upto LPs.
d) Power load on each LP & LDB
e) Layout drawings for indoor areas
f) Layout drawings for outdoor areas.
g) Conduit layout drawings.
h) Wiring and load distribution details for outdoor areas.
i) Master Bill of Material.

j) Packing Procedure & drawing.
k) Calculation for selection of no. & size of container.

12.2.2 **Other documents :**

a) Final Quality Plans
b) Technical data sheet
c) Polar curves, zonal flux diagram and CoU charts of luminaires.
d) Complete design calculations for arriving at number of luminaires.
e) Fixing / mounting details of luminaires and other items.
f) General arrangement drawings of following:
   i. Luminaires
   ii. Receptacles
   iii. 24 V Supply module
g) Field Quality Plan as per General Technical Conditions.
h) Control Scheme for fluorescent, HPMV and HPSV luminaires.
i) Schematic drawings for LDBs / LPs.
j) Type test certificates.
k) Catalogues / leaflets

12.3 Operation and Maintenance (O&M) manual :

The document shall comprise of installation, operating and maintenance instructions for various items / components. The O&M manual shall include the following :

a) Write ups / instructions / procedures for
   i. Storage at site.
   ii. Unpacking.
   iii. Handling at site.
   iv. Erection.
   v. Pre-commissioning / commissioning tests.
   vi. Operating procedures.
   vii. Maintenance procedures.
   viii. Precautions to be taken during operation and maintenance work.
   ix. Trouble shooting charts covering problems, cause and solution.
b) Approved Technical Data Sheets.
c) Technical leaflet of various items / components.
d) Copies of the type, acceptance and routine test certificates in bound volume.
e) Details of all components liable to be replaced during the life of the equipment.
f) List of maintenance tools required.
g) List of testing equipment required.

12.4 AS BUILT DRAWINGS

a) Preparation of as-built drawings shall be in the scope of vendor.
b) The as-built drawings shall be prepared on the basis of marked up copies received from the erection contractor.
c) Entire work of as-built drawings shall be to the satisfaction of purchaser.

NTPC	ITEM : LIGHTING FIXTURES (Conventional and LED type)	STANDARD QUALITY PLAN	QP.NO:0000-999-QOE-S-062	REVIEWED BY	APPROVED BY
		CONFORMING TO CODE : As applicable	Rev No.: 00	SWAPNESWAR MISHRA	R.M.Jain
			Date: 02/11/15	VIKRAM TALWAR	
			VALID UPTO: 01/11/18	SUNIL MALANI	

Sl No	COMPONENT & OPERATIONS		CHARACTERISTICS / INSTRUMENTS	CLASS OF CHECK	TYPE OF CHECK	QUANTUM OF CHECK 6 M	QUANTUM OF CHECK 6 C/N	REFERENCE DOCUMENT	ACCEPTANCE NORMS	FORMAT OF RECORD		M	C	N	REMARKS
1	2		3	4	5			7	8	9	D*	**	10		11
	Note: 1): Lighting fixtures supplier to ensure that constructional features of the lighting fixture (conventional & LED type) are as per NTPC specification requirements 2): Lighting fixture supplier to maintain all quality control records identified in this QP whether it is identified for NTPC verification or witness or not.														
	Conventional type Lighting Fixture														
A	**Bought out items / in-process checks**														
1	Lamps		Make, rating & type	Major	Visual	1 sample per type	1 sample per type	NTPC specification requirements for rating & type, Make to be BIS approved with CML number	NTPC specification requirements for rating & type, Make to be BIS approved with CML number			V	-	-	
1.1	Electronic Ballast (if applicable)	a	Certificate of compliance	Major	Visual	-	-	NTPC specification requirements	Certificate of compliance by ballast manufacturer / lighting fixture supplier that ballst meets all NTPC specification requirements	Certificate of compliance		V	-	-	
		b	THD and pf check	Major	Electrical	Mnfr std.	-	NTPC specification requirements	THD <=10% , pf >= 0.9 for FH type and pf >= 0.95 for other type of florescent lighting fixtures	Inspection report		P/V *	-	-	P/V * - means test will be performed either by lighting fi supplier or their sub-vendor ar Verified by lighting fixture su
1.2	Castings		Freedom from defects	Major	Visual	Mnfr std.	-	NTPC specification requirements	Castings shall be free from any defects such as blow holes, surface blisters, cracks and cavities etc.	Inspection report		P/V *	-	-	P/V * - means test will be performed either by lighting fi supplier or their sub-vendor ar Verified by lighting fixture su
1.3	Sheet metal forming and fabrication		Freedom from defects	Major	Visual	Mnfr std.	-	NTPC specification requirements	sheet metal fabrication / formng etc should be as per manufacturer drgs	Inspection report		P/V *	-	-	P/V * - means test will be performed either by lighting fi supplier or their sub-vendor ar Verified by lighting fixture su
1.4	Pre-treatment and powder coating		Pre-treatment process checks, Powder coating finish, thickness, uniformity of coating and adhesion	major	Visual, chemical & mech	Mnfr std.	-	Mnfr standard , NTPC specification requirements	Nominal coating thickness 50 microns or more	Inspection report		P/V *	-	-	P/V * - means test will be performed either by lighting fi supplier or their sub-vendor ar Verified by lighting fixture su

LEGEND: * RECORDS, INDENTIFIED WITH "TICK" (√) SHALL BE ESSENTIALLY INCLUDED BY SUPPLIER IN QA DOCUMENTATION. ** M: MANUFACTURER / SUB-SUPPLIER: C: MAIN SUPPLIER, N: NT
P: PERFORM W: WITNESS AND V: VERIFICATION. CHP: CUSTOMER HOLD POINT BY NTPC SHALL BE IDENTIFIED UNDER AGENCY COLUMN "N" AS 'W'.

NTPC	ITEM : LIGHTING FIXTURES (Conventional and LED type)	STANDARD QUALITY PLAN	QP.NO:8000-999-QOE-S-062	REVIEWED BY	APPROVED BY
		CONFORMING TO CODE : As applicable	Rev No.: 00	SWAPNESWAR MISHRA	K.N.Jain
			Date: 02/11/15	VIKRAM TALWAR	
			VALID UPTO: 01/11/18	SUNIL MALAN	

Sl No	COMPONENT & OPERATIONS		CHARACTERISTICS / INSTRUMENTS	CLASS OF CHECK	TYPE OF CHECK	QUANTUM OF CHECK		REFERENCE DOCUMENT	ACCEPTANCE NORMS	FORMAT OF RECORD					REMARKS
						6 M	6 C/N					M	C	N	
	2		3	4	5			7	8	9	D*	**	10		11
3	**Acceptance Tests on conventional Lighting fixture**	a	Details of lot offered and Certificate of compliance that lighting fixture supplier has inspected the offered lot as per their own standard	Major	Visual	-	-	lighting fixture supplier to submit the details of lot offered for NTPC inspection (Type of lighting fixtures, their batch number, sub-vendor name, quantity)	COC	List		P	V	V	The list may be used by NTPC for sample selection
		b	Lamp make	Major	Visual	100%	100%	Make to be BIS approved with CML number	Make to be BIS approved with CML number	Certificate of compliance		V	V	V	
		c	Constructional features including: Internal wiring, terminal block, earthing terminal, safety chain (if applicable)	Major	Visual	1 sample per type	1 sample per type	NTPC specification and NTPC approved data sheet/drg	NTPC specification and approved data sheet/drg.	Inspection report		P	W	W	
		d	Electronic Ballast (if applicable for offered lighting fixtures) THD and pf check	Major	Electrical	1 sample per type	1 sample per type	NTPC specification	THD <=10% , pf >= 0.9 for FH type and pf >= 0.95 for other type of florescent lighting fixtures	Inspection report		P	W	W	At lighting fixture supplier test lab
		e	Resistance to moisture test in case of lighting fixtures having IP X4 and above rating	Major	Mechanical	1 sample per type	1 sample per type	NTPC approved data Sheet	IS 10322 Part 1	Inspection report		P	W	W	
		f	Resistance to dust (applicable if IP5X and above)	Major	optical	Mnfr std.	Mnfr std	NTPC approved Data sheet and accepted type test reports	Certificate of compliance	Certificate of compliance		P/V *	V	V	P/V * - means test will be performed either by lighting fixture supplier or their sub-vendor and Verified by lighting fixture supplier
		f	Photometry check	Major	optical	Mnfr std.	Mnfr std	NTPC accepted type test reports	Certificate of compliance for the batch : that offered lighting fixture LOR is not be less than 90% (refer IS 16107) with reference to type test reports	Certificate of compliance		P/V *	V	V	P/V * - means test will be performed either by lighting fixture supplier or their sub-vendor and Verified by lighting fixture supplier
		g	Dimensions	Major	Visual	1 sample per type	1 sample per type	NTPC specification and approved data sheet/drg.	NTPC specification and approved data sheet/drg.	Inspection report		P	W	W	
		h	HV & IR test	Major	Visual	#	#	IS 10322 part 1	IS 10322 part 1	Inspection report		P	W	W	# As per Table 1 (inspection Level S2) and Table 2C AQL 2.5 of IS 2500

LEGEND: * RECORDS, INDENTIFIED WITH "TICK" (√) SHALL BE ESSENTIALLY INCLUDED BY SUPPLIER IN QA DOCUMENTATION. ** M: MANUFACTURER/ SUB-SUPPLIER: C: MAIN SUPPLIER, N: NTPC
P: PERFORM W: WITNESS AND V: VERIFICATION. CHP: CUSTOMER HOLD POINT BY NTPC SHALL BE IDENTIFIED UNDER AGENCY COLUMN "N" AS 'W'.

NTPC	ITEM : LIGHTING FIXTURES (Conventional and LED type)	STANDARD QUALITY PLAN	QP.NO:0000-999-QOE-S-062	REVIEWED BY	APPROVED BY
		CONFORMING TO CODE : As applicable	Rev No.: 03	SWAPNESWAR MISHRA	K.M.Jain
			Date: 02/11/15	VIKRAM TALWAR	
			VALID UPTO: 01/11/18	SUNIL MALANI	

o	COMPONENT & OPERATIONS		CHARACTERISTICS / INSTRUMENTS	CLASS OF CHECK	TYPE OF CHECK	QUANTUM OF CHECK		REFERENCE DOCUMENT	ACCEPTANCE NORMS	FORMAT OF RECORD					REMARKS
						6 M	6 C/N					M	C	N	
	2		3	4	5			7	8	9	D*	**	10		11
	LED type Lighting fixture														
	Bought out items / in-process checks														
	LED Chip		LED chip efficacy	Major	Visual	Mnfr Std.	Mnfr Std.	NTPC Spec/ Appd. Data sheet/ LM 80 report	NTPC Spec/ Appd Data sheet	LM 80 report		V	V	V	At the time of final inspection
			LED chip CRI and CCT	Major	Visual	Mnfr Std.	Mnfr Std.	NTPC Spec/ Appd. Data sheet/ LM 80 report	NTPC Spec/ Appd Data sheet	LM 80 report		V	V	V	At the time of final inspection
			Reported TM21 (L80) lifetime of LED chip	Major	Visual	Mnfr Std.	Mnfr Std.	NTPC Spec/ Appd. Data sheet/ LM 80 report	NTPC Spec/ Appd Data sheet	LM 80 report		V	V	V	At the time of final inspection
.1	LED Driver	a	Compatibility with LED module/chip, controls & protection features as per NTPC spec	Major	Visual	-	-	NTPC spec requirements	Certificate of compliance by LED driver manufacturer / lighting fixture supplier that driver meets all NTPC specification requirements	Certificate of compliance		V	V	V	
		b	THD and pf check	Major	Electrical	Mnfr std.	-	NTPC specification	THD < 10% and pf >= 0.9	Inspection report		P/V *	-	-	P/V * - means test will be performed either by lighting fixture supplier or their sub-vendor and Verified by lighting fixture supplier
	Castings		Freedom from defects	Major	Visual	Mnfr std.		NTPC specification requirements	Castings shall be free from any defects such as blow holes, surface blisters, cracks and cavities etc.	Inspection report		P/V *	-	-	P/V * - means test will be performed either by lighting fixture supplier or their sub-vendor and Verified by lighting fixture supplier
	Sheet metal forming and fabrication		Freedom from defects	Major	Visual	Mnfr std.	-	NTPC specification requirements	sheet metal fabriaction / forming etc should be as per manufacturer standards and good engg practices	Inspection report		P/V *	-	-	P/V * - means test will be performed either by lighting fixture supplier or their sub-vendor and Verified by lighting fixture supplier
	Pre-treatment and powder coating		Pre-treatment process checks, Powder coating finish, thickness, uniformity of coating and adhesion	major	Visual, chemical & mech	Mnfr std.	-	Mnfr standard , NTPC specification requirements	Nominal coating thickness 50 microns or more	Inspection report		P/V *	-	-	P/V * - means test will be performed either by lighting fixture supplier or their sub-vendor and Verified by lighting fixture supplier

LEGEND: * RECORDS, INDENTIFIED WITH "TICK" (√) SHALL BE ESSENTIALLY INCLUDED BY SUPPLIER IN QA DOCUMENTATION.** M: MANUFACTURER/ SUB-SUPPLIER: C: MAIN SUPPLIER, N: NTPC
P: PERFORM W: WITNESS AND V: VERIFICATION. CHP: CUSTOMER HOLD POINT BY NTPC SHALL BE IDENTIFIED UNDER AGENCY COLUMN "N" AS 'W'.

Format No.: QS-01-QAI-P-10/F3-R0 Engg. Div./QA&I

NTPC	ITEM : LIGHTING FIXTURES (Conventional and LED type)	STANDARD QUALITY PLAN	QP.NO:0000-999-QOE-S-062	REVIEWED BY	APPROVED BY
		CONFORMING TO CODE : As applicable	Rev No.: 00	SWAPNESWAR MISHRA	K.M.Jain
			Date: 02/11/15	VIKRAM TALWAR	
			VALID UPTO: 01/11/18	SUNIL MALANI	

Sl No	COMPONENT & OPERATIONS		CHARACTERISTICS / INSTRUMENTS	CLASS OF CHECK	TYPE OF CHECK	QUANTUM OF CHECK		REFERENCE DOCUMENT	ACCEPTANCE NORMS	FORMAT OF RECORD					REMARKS
						6 M	6 C/N					M	C	N	
1	2		3	4	5			7	8	9	D*	**	10		11
B	**Acceptance Tests on LED Lighting fixture**	a	Details of lot offered and Certificate of compliance that lighting fixture supplier has inspected the offered lot as per their own standard	Major	Visual	-	-	lighting fixture supplier to submit the details of lot offered for NTPC inspection (Type of lighting fixtures, their batch number, sub-vendor name, quantity)	-	List		P	V	V	The list may be used by NTPC for sample selection
		b	LED chip make	Major	Visual	-	-	NTPC accepted type test reports (LM80/LM79) report	Certificate of compliance	Certificate of compliance		V	V	V	
		c	Constructional features including: Internal wiring, terminal block, earthing terminal, safety chain (if applicable)	Major	Visual	1 sample per type	1 sample per type	NTPC specification and NTPC approved data sheet/drg.	NTPC specification and approved data sheet/drg.	Inspection report		P	W	W	
		e	Resistance to moisture test in case of lighting fixtures having IP X4 and above rating	Major	Mechanical	1 sample per type	1 sample per type	NTPC approved data Sheet	IS 10322 Part I	Inspection report		P	W	W	
		f	Resistance to dust (applicable if IP5X and above)	Major	optical	Mnfr std.	Mnfr std	NTPC accepted type test reports	Certificate of compliance	Certificate of compliance		P/V *	V	V	P/V * - means test will be performed either by lighting fixture supplier or their sub-vendor and Verified by lighting fixture supplier
		f	Photometry check	Major	optical	Mnfr std.	Mnfr std	NTPC accepted type test reports, LM 79, IS 16106, IS 16107	Certificate of compliance for the batch: that offered lighting fixture LOR and lighting fixture efficacy is not be less than 90% (refer IS 16107) with reference to type test reports	Certificate of compliance		P/V *	V	V	P/V * - means test will be performed either by lighting fixture supplier or their sub-vendor and Verified by lighting fixture supplier

LEGEND: * RECORDS, INDENTIFIED WITH "TICK" (√) SHALL BE ESSENTIALLY INCLUDED BY SUPPLIER IN QA DOCUMENTATION. ** M: MANUFACTURER/ SUB-SUPPLIER: C: MAIN SUPPLIER, N: NTPC
P: PERFORM W: WITNESS AND V: VERIFICATION. CHP: CUSTOMER HOLD POINT BY NTPC SHALL BE IDENTIFIED UNDER AGENCY COLUMN "N" AS 'W'.

Format No.: QS-01-QAI-P-10/F3-R0 Engg. Div./QA&I

NTPC	ITEM : LIGHTING FIXTURES (Conventional and LED type)	STANDARD QUALITY PLAN	QP.NO:3000-999-QOE-S-062	REVIEWED BY	APPROVED BY
		CONFORMING TO CODE : As applicable	Rev No.: 00	SWAPNESWAR MISHRA	K.M.Jain
			Date: 01/11/15	VIKRAM TALWAR	
			VALID UPTO: 01/11/18	SUNIL MALANI	

Sl No	COMPONENT & OPERATIONS		CHARACTERISTICS / INSTRUMENTS	CLASS OF CHECK	TYPE OF CHECK	QUANTUM OF CHECK		REFERENCE DOCUMENT	ACCEPTANCE NORMS	FORMAT OF RECORD					REMARKS
						6 M	6 C/N					M	C	N	
1	2		3	4	5			7	8	9	D*	**	10		11
		g	Dimensions	Major	Visual	1 sample per type	1 sample per type	NTPC specification and approved data sheet/drg.	NTPC specification and approved data sheet/drg.	Inspection report		P	W	W	
		i	LED driver: THD and pf check	Major	Electrical	1 sample per type	1 sample per type	NTPC specification	THD < 10% and pf >= 0.9	Inspection report		P	W	W	At lighting fixture supplier test lab
		j	LED driver: Precision current control check	Major	Electrical	1 sample per type	1 sample per type	NTPC specification	NTPC specification and NTPC approved data sheet	Inspection report		P	W	W	
		k	LED driver: Open circuit protection simulation check	Major	Electrical	1 sample per type	1 sample per type	NTPC specification	NTPC specification and NTPC approved data sheet	Inspection report		P	W	W	
		l	LED driver: Short circuit protection simulation check	Major	Electrical	1 sample per type	1 sample per type	NTPC specification	NTPC specification and NTPC approved data sheet	Inspection report		P	W	W	
		m	LED driver: Over temperature protection simulation check	Major	Electrical	1 sample per type	1 sample per type	NTPC specification	NTPC specification and NTPC approved data sheet	Inspection report		P	W	W	
		n	LED driver: Overload protection simulation check	Major	Electrical	1 sample per type	1 sample per type	NTPC specification	NTPC specification and NTPC approved data sheet	Inspection report		P	W	W	
		o	LED driver: Surge protection compliance check	Major	Electrical	-	-	NTPC specification	Certificate of compliance that surge protection is provided	Certificate of compliance		V	V	V	

Note: Packing shall be witnessed as per Annexure-D to section-I

LEGEND: * RECORDS, INDENTIFIED WITH "TICK" (√) SHALL BE ESSENTIALLY INCLUDED BY SUPPLIER IN QA DOCUMENTATION. ** M: MANUFACTURER / SUB-SUPPLIER: C: MAIN SUPPLIER, N: NTPC
P: PERFORM W: WITNESS AND V: VERIFICATION. CHP: CUSTOMER HOLD POINT BY NTPC SHALL BE IDENTIFIED UNDER AGENCY COLUMN "N" AS 'W'.

Format No.: QS-01-QAI-P-10/F3-R0 Engg. Div./QA&I