ANNEXURE-H (POLE-3)

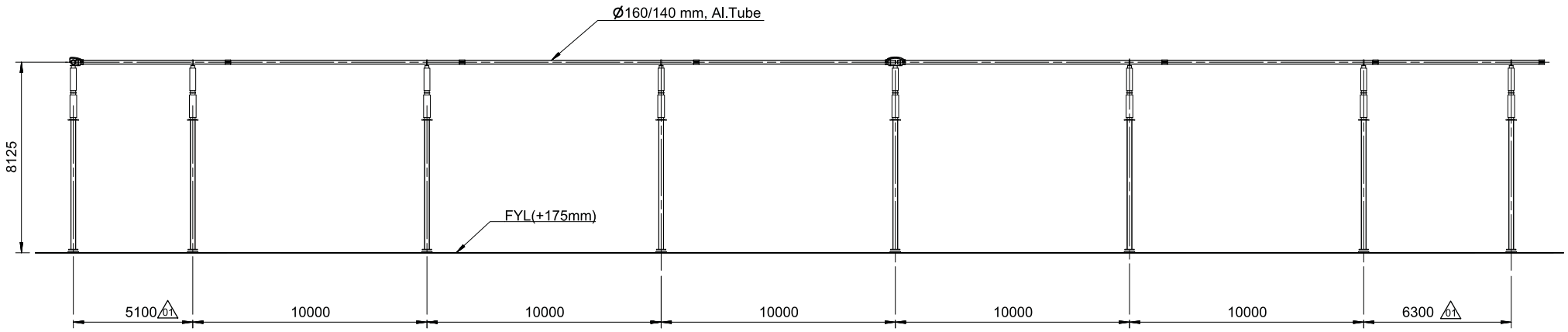

SECTION R-R

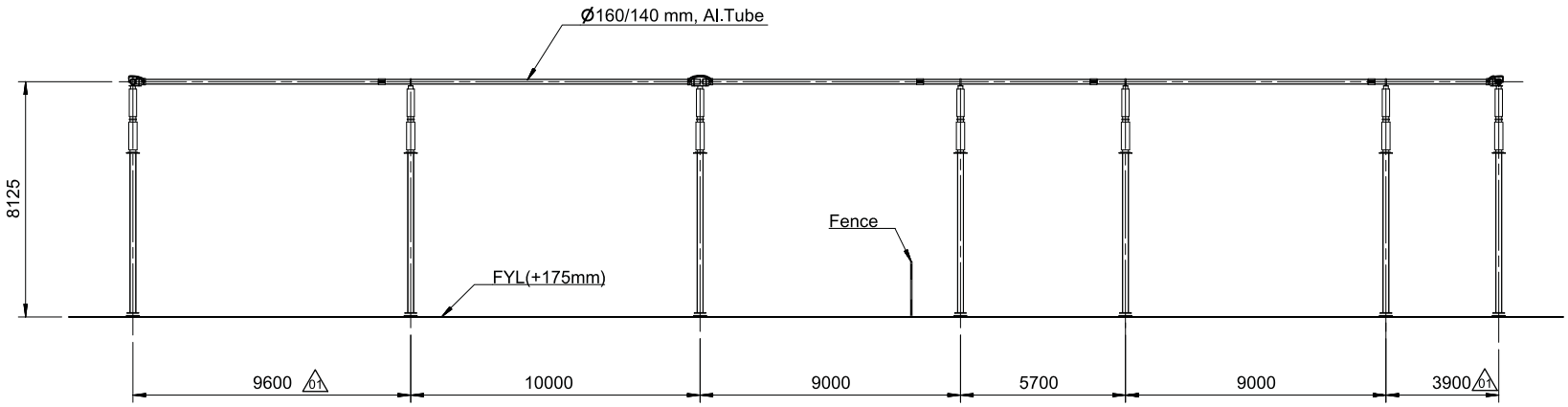

SECTION P-P

Rev	Revision	Prepared	Approved	Date
01	Revision made are marked. Also refer last page for revision notes.	Huzair, FM	Naik, Ashish	2018-06-29

Contract No: CC-CS/651-SR2/HVDC-3063/7G10/CA-I/5817-5821 dated 2017-01-25

Client: POWER GRID CORPORATION OF INDIA LIMITED (A Government of India Enterprise)

BHARAT HEAVY ELECTRICALS LTD. TRANSMISSION BUSINESS GROUP

Station Name: Raigarh

Classification No.: FJB-64

Based on: -

Prepared: Huzair, FM 2018-01-10

Approved: Naik, Ashish 2018-01-12

Doc. Kind: Layout drawing

Project name: ±800kV, 6000MW HVDC Raigarh-Pugalur Terminals

Title: Pole3-Layout&Sections DC Yard

Status: Issued

Item designation: -

Resp dept: PGGI/DCHUBTPM

Rev ind: 01

Language: -

ABB AB - HVDC

Document number: 1JNL100484-562

Sheet/of: 10 / 11

We reserve all rights in this document and in the information contained therein. Reproduction, use or disclosure to third parties without express authority is strictly forbidden. © ABB AB, (SE)

This document is issued by means of a computerized system. The digital stored original is electronically approved. The approved document has a name and date stamped in the approval field. A manual signature is not required.

(A2)

ANNEXURE-H (POLE-3)

Revision History :

Revision No.	Date	Sheet No.	Revision Note
01	28-06-2018	Sheet 1	Notes updated
		Sheet 2	Equipment position updated & North East coordinates added
		Sheet 3	Section Line S-S are added
		Sheet 4	Dimensions and Tube size updated
		Sheet 5	Dimensions updated
		Sheet 6	Tube size updated
		Sheet 7	Dimensions and Tube size updated
		Sheet 8	Dimensions updated
		Sheet 9	Dimensions updated & Section view S-S added
		Sheet 10	Dimensions updated

We reserve all rights in this document and in the information contained therein. Reproduction, use or disclosure to third parties without express authority is strictly forbidden. © ABB AB, 2018

This document is issued by means of a computerized system. The digital stored original is electronically approved. The approved document has a name and date stamped in the approval field.
A manual signature is not required.

Rev	Revision	Prepared	Approved	Date
01	Revision made are marked. Also refer last page for revision notes.	Huzair, FM	Naik, Ashish	2018-06-29

Contract No: CC-CS/651-SR2/HVDC-3063/7G10/CA-I/5817-5821 dated 2017-01-25

Client:

POWER GRID CORPORATION OF INDIA LIMITED
(A Government of India Enterprise)

पावरग्रिड

BHARAT HEAVY ELECTRICALS LTD.
TRANSMISSION BUSINESS GROUP

Station Name: Raigarh

Classification No.: FJB - 64

Based on: -

Prepared: Huzair, FM 2018-01-10

Approved: Naik, Ashish 2018-01-12

Doc. Kind: Layout drawing

Project name: ±800kV, 6000MW HVDC Raigarh-Pugalur Terminals

Title: Pole3-Layout&Sections
DC Yard

Status: Issued

Resp dept: PGGI/DCHUBTPM

Rev ind: 01

Item designation: -

Language: -

ABB AB - HVDC

Document number: 1JNL100484-562

Sheet/of: 11 / 11

(A2)

ANNEXURE-H (POLE-4)

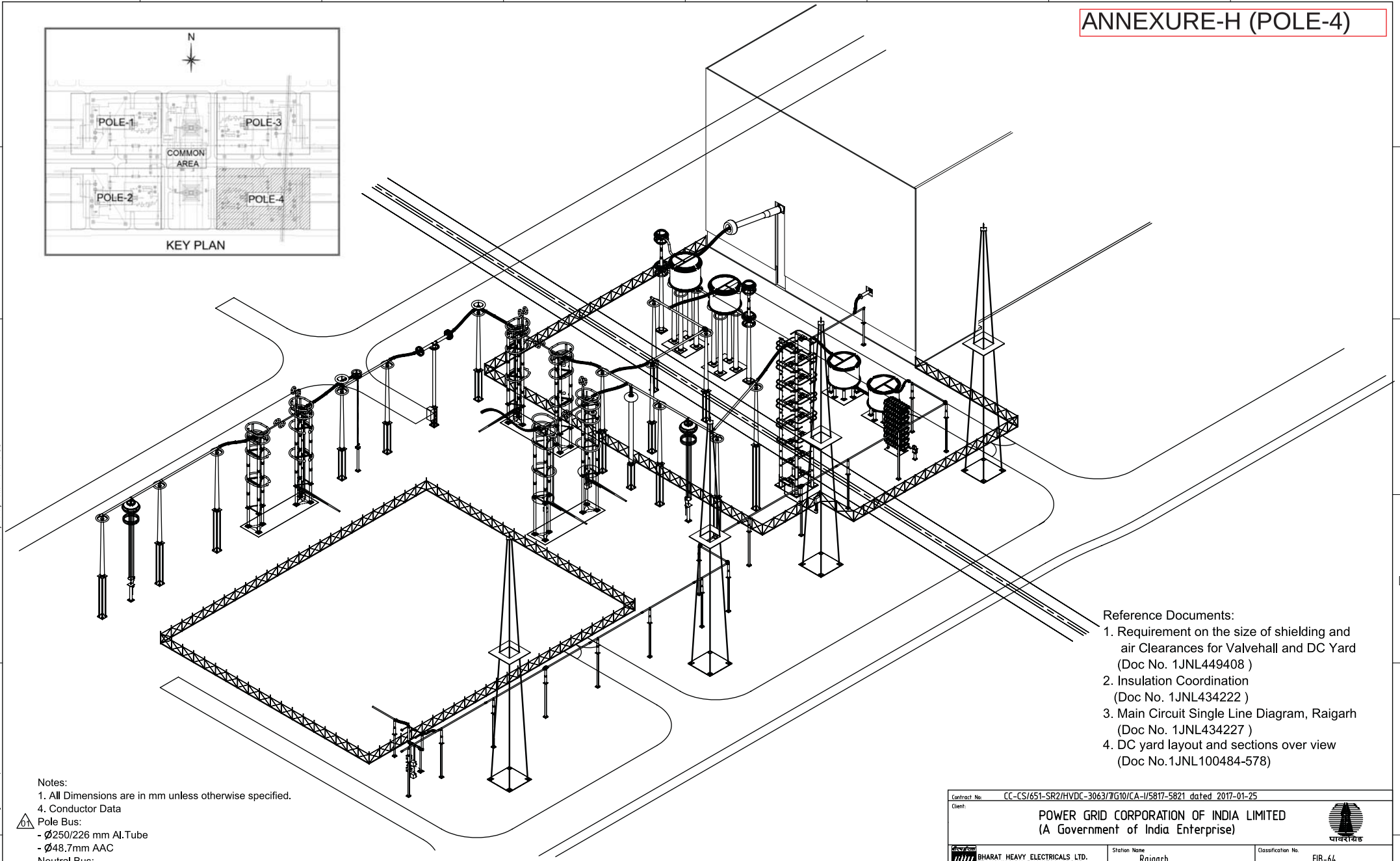

Reference Documents:
1. Requirement on the size of shielding and air Clearances for Valvehall and DC Yard (Doc No. 1JNL449408)
2. Insulation Coordination (Doc No. 1JNL434222)
3. Main Circuit Single Line Diagram, Raigarh (Doc No. 1JNL434227)
4. DC yard layout and sections over view (Doc No.1JNL100484-578)

Notes:
1. All Dimensions are in mm unless otherwise specified.
4. Conductor Data
01 Pole Bus:
- Ø250/226 mm Al.Tube
- Ø48.7mm AAC
Neutral Bus:
- Ø160/140mm Al.Tube
- Ø32.6mm AAC
01 Damping wire:
- Ø48.7mm AAC for Ø250/226 mm Al.Tube (Length of damping wire Shall be 2/3 of the length of the bus bar)
- Ø29.0mm AAC for Ø160/140mm Al.Tube (Length of damping wire Shall be 2/3 of the length of the bus bar)

Rev	Revision	Prepared	Approved	Date
01	Revision made are marked. Also refer last page for revision notes.	Huzair, FM	Naik, Ashish	2018-06-29

Contract No: CC-CS/651-SR2/HVDC-3063/7G10/CA-I/5817-5821 dated 2017-01-25

Client:
POWER GRID CORPORATION OF INDIA LIMITED
(A Government of India Enterprise)

BHARAT HEAVY ELECTRICALS LTD. TRANSMISSION BUSINESS GROUP

Station Name: Raigarh
Classification No.: FJB-64

Based on: –
Prepared: Huzair, FM 2018-01-10
Approved: Naik, Ashish 2018-01-12
Doc. Kind: Layout drawing

Project name: ±800kV, 6000MW HVDC Raigarh-Pugalur Terminals

Title: Pole4-Layout&Sections DC Yard
Status: Issued
Item designation: –
Resp dept: PGGI/DCHUBTPM
Rev ind: 01
Language: –

ABB AB - HVDC

Document number: 1JNL100484-563

Sheet/of: 1 / 11

(A2)

We reserve all rights in this document and in the information contained therein. Reproduction, use or disclosure to third parties without express authority is strictly forbidden. © ABB AB (SE)

This document is issued by means of a computerized system. The digitally stored original is electronically date and time stamped and has a unique and traceable ID. A manual signature is not required.

ANNEXURE-H (POLE-4)

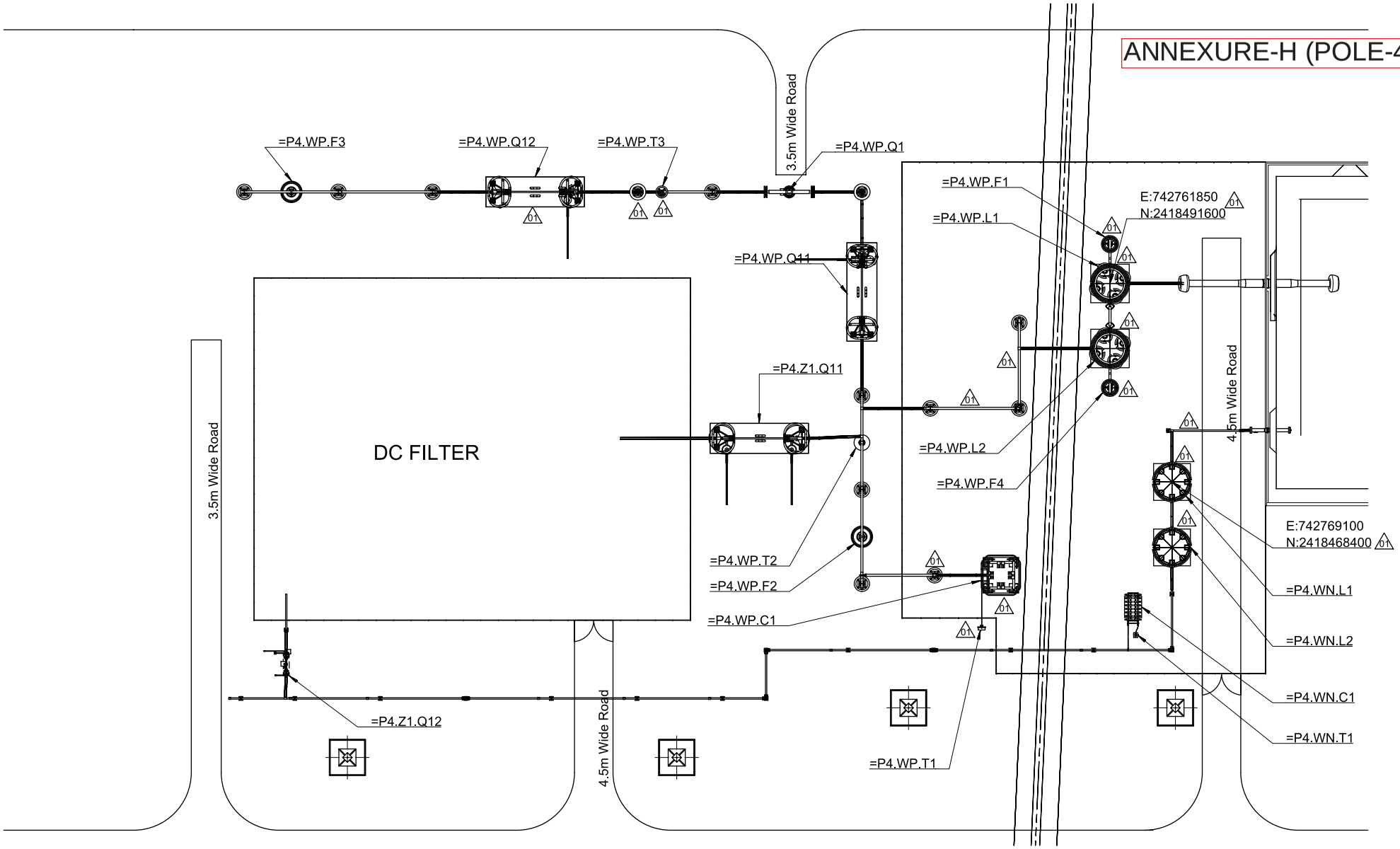

Rev	Revision	Prepared	Approved	Date
01	Revision made are marked. Also refer last page for revision notes.	Huzair, FM	Naik, Ashish	2018-06-29

Contract No: CC-CS/651-SR2/HVDC-3063/7G10/CA-I/5817-5821 dated 2017-01-25

Client:

POWER GRID CORPORATION OF INDIA LIMITED
(A Government of India Enterprise)

पावरग्रिड

BHARAT HEAVY ELECTRICALS LTD.
TRANSMISSION BUSINESS GROUP

Station Name: Raigarh

Classification No.: FJB-64

Based on: –

Prepared: Huzair, FM 2018-01-10

Approved: Naik, Ashish 2018-01-12

Doc. Kind: Layout drawing

Project name: ±800kV, 6000MW HVDC Raigarh-Pugalur Terminals

Title: Pole4-Layout&Sections DC Yard

Status: Issued

Item designation: –

Resp dept: PGGI/DCHUBTPM

Rev ind: 01

Language: –

ABB AB - HVDC

Document number: 1JNL100484-563

Sheet/of: 2 / 11

(A2)

We reserve all rights in this document and in the information contained therein. Reproduction, use or disclosure to third parties without express authority is strictly forbidden. © ABB AB (SE)

This document is issued by means of a computerized system. The digitally stored original is electronically approved. Therefore it does not need date and signature. A manual signature is not required.

ANNEXURE-H (POLE-4)

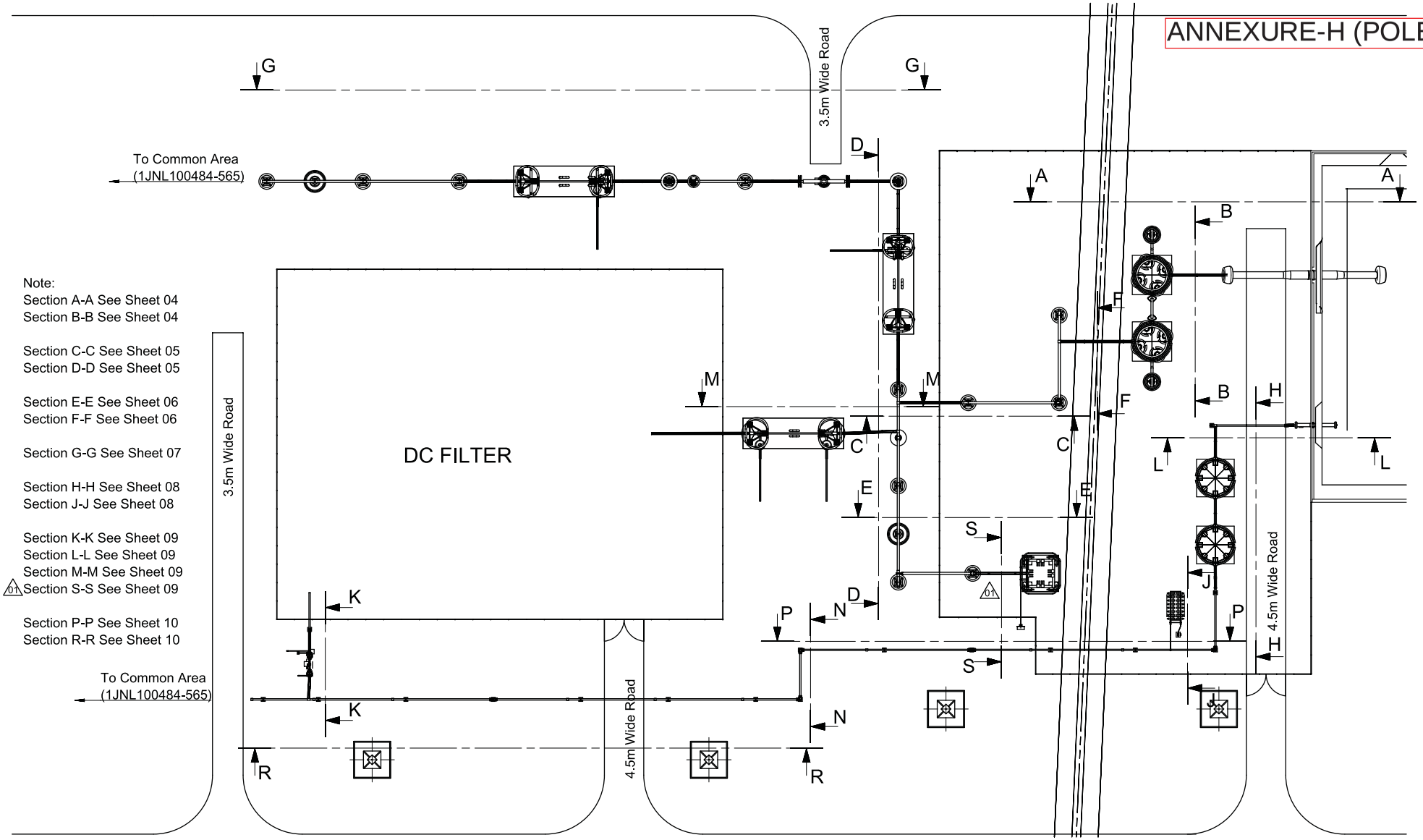

Note:
Section A-A See Sheet 04
Section B-B See Sheet 04

Section C-C See Sheet 05
Section D-D See Sheet 05

Section E-E See Sheet 06
Section F-F See Sheet 06

Section G-G See Sheet 07

Section H-H See Sheet 08
Section J-J See Sheet 08

Section K-K See Sheet 09
Section L-L See Sheet 09
Section M-M See Sheet 09
01 Section S-S See Sheet 09

Section P-P See Sheet 10
Section R-R See Sheet 10

We reserve all rights in this document and in the information contained therein. Reproduction, use or disclosure to third parties without express authority is strictly forbidden. © ABB AB, 2018

This document is issued by means of a computerized system. The digital stored original is electronically approved. The approved document has a name and date instead of a handwritten signature. A manual signature is not required.

Rev	Revision	Prepared	Approved	Date
01	Revision made are marked. Also refer last page for revision notes.	Huzair, FM	Naik, Ashish	2018-06-29

Contract No: CC-CS/651-SR2/HVDC-3063/7G10/CA-I/5817-5821 dated 2017-01-25

Client:
POWER GRID CORPORATION OF INDIA LIMITED
(A Government of India Enterprise)

BHARAT HEAVY ELECTRICALS LTD.
TRANSMISSION BUSINESS GROUP

Station Name: Raigarh
Classification No.: FJB-64

Based on: -
Prepared: Huzair, FM 2018-01-10
Approved: Naik, Ashish 2018-01-12
Doc. Kind: Layout drawing

Project name: ±800kV, 6000MW HVDC Raigarh-Pugalur Terminals

Title: Pole4-Layout & Sections
DC Yard

Status: Issued
Resp dept: PGGI/DCHUBTPM
Rev ind: 01
Item designation: -
Language: -

ABB AB - HVDC

Document number: 1JNL100484-563

Sheet of: 3 / 11

(A2)

ANNEXURE-H (POLE-4)

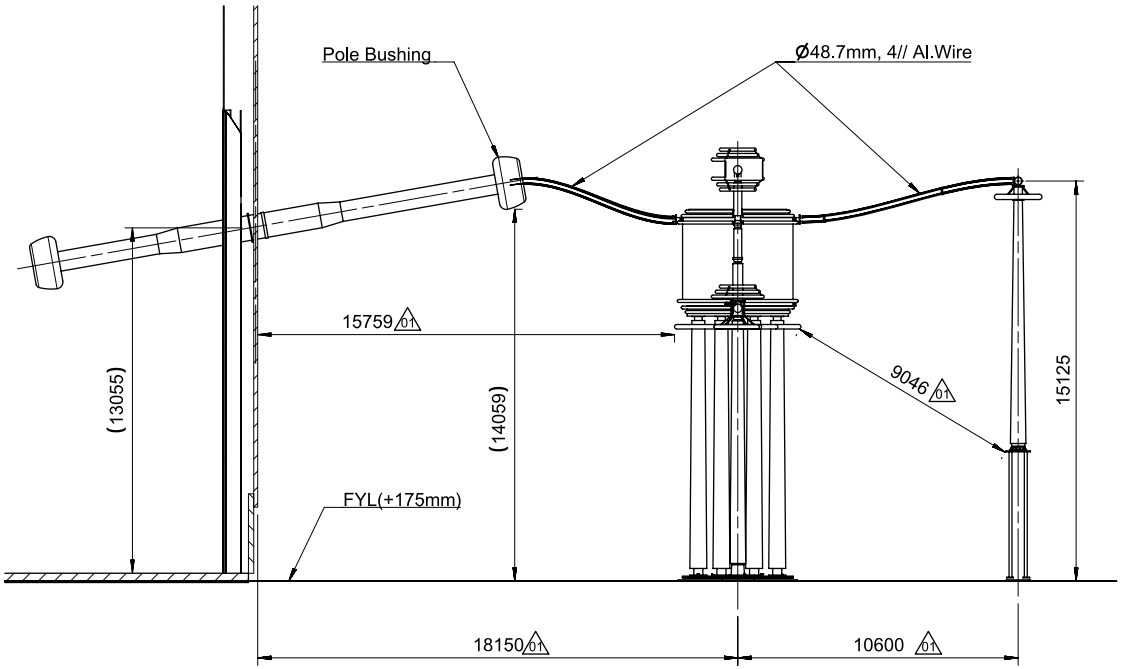

SECTION A-A

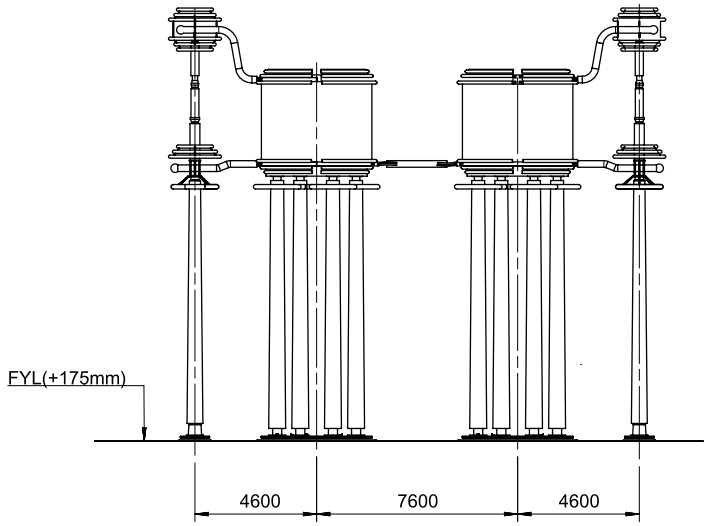

SECTION B-B

We reserve all rights in this document and in the information contained therein. Reproduction, use or disclosure to third parties without express authority is strictly forbidden. © ABB AB, (SE)

This document is issued by means of a computerized system. The digital stored original is electronically approved. The approved document has a name and date approved in the approved field. A manual signature is not required.

Rev	Revision	Prepared	Approved	Date
01	Revision made are marked. Also refer last page for revision notes.	Huzair, FM	Naik, Ashish	2018-06-29

Contract No: CC-CS/651-SR2/HVDC-3063/7G10/CA-I/5817-5821 dated 2017-01-25

Client:

POWER GRID CORPORATION OF INDIA LIMITED
(A Government of India Enterprise)

पावरग्रिड

BHARAT HEAVY ELECTRICALS LTD.
TRANSMISSION BUSINESS GROUP

Station Name: Raigarh

Classification No.: FJB-64

Based on: -

Prepared	Huzair, FM	2018-01-10
Approved	Naik, Ashish	2018-01-12
Doc. Kind	Layout drawing	

Project name: ±800kV, 6000MW HVDC Raigarh-Pugalur Terminals

Title: Pole4-Layout & Sections DC Yard

Status: Issued

Item designation: -

Resp dept: PGGI/DCHUBTPM

Rev ind: 01

Language: -

ABB AB - HVDC

Document number: 1JNL100484-563

Sheet/of: 4 / 11

(A2)

ANNEXURE-H (POLE-4)

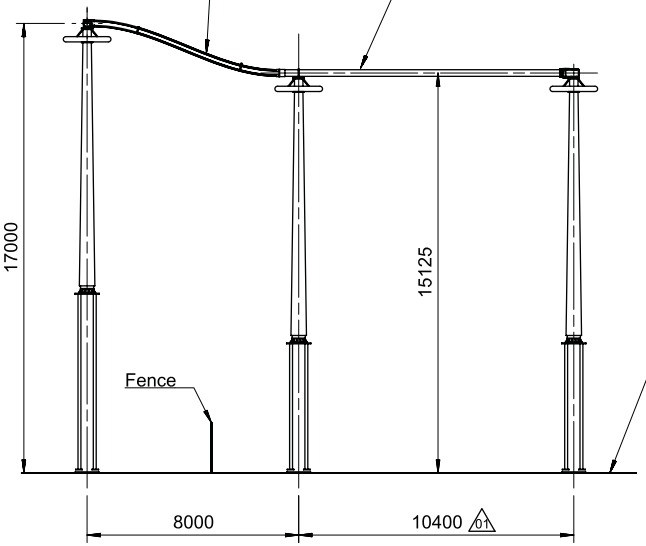

SECTION C-C

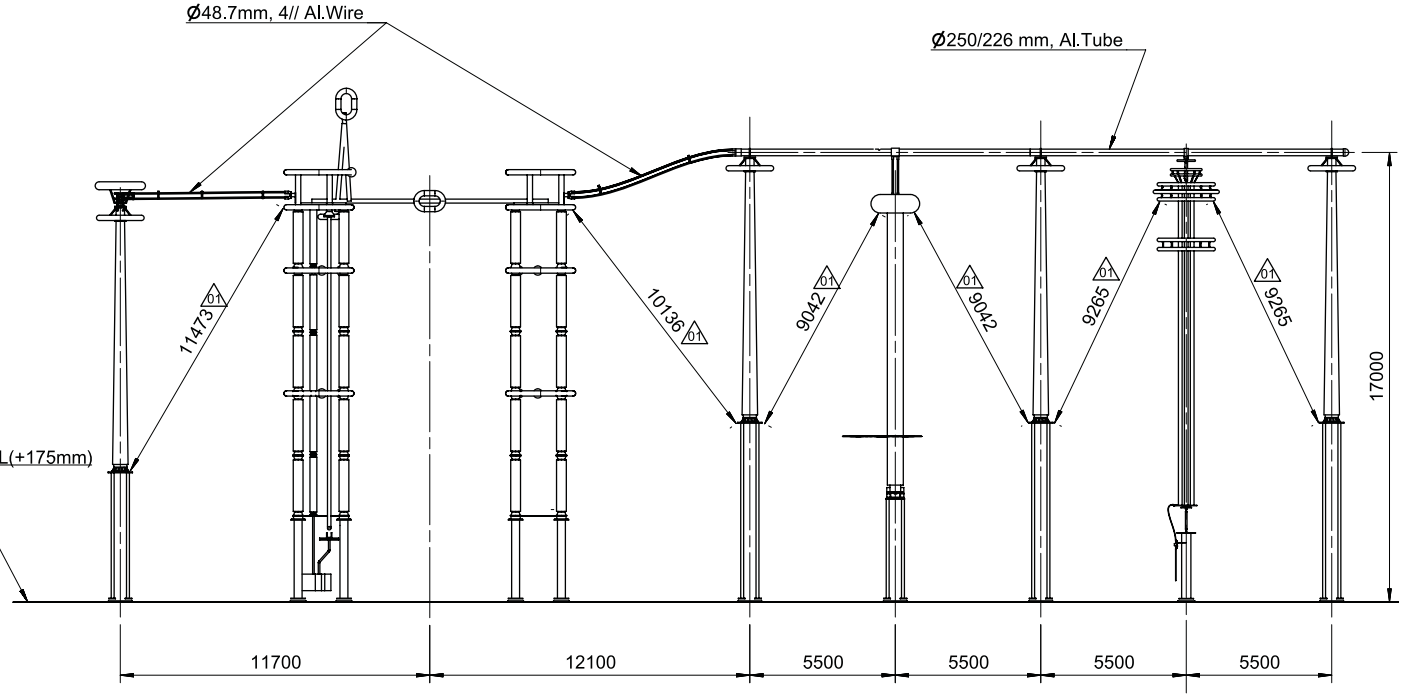

SECTION D-D

Rev	Revision	Prepared	Approved	Date
01	Revision made are marked. Also refer last page for revision notes.	Huzair, FM	Naik, Ashish	2018-06-29

Contract No: CC-CS/651-SR2/HVDC-3063/7G10/CA-I/5817-5821 dated 2017-01-25

Client: POWER GRID CORPORATION OF INDIA LIMITED (A Government of India Enterprise)

BHARAT HEAVY ELECTRICALS LTD. TRANSMISSION BUSINESS GROUP

Station Name: Raigarh

Classification No.: FJB-64

Based on: -

Prepared: Huzair, FM 2018-01-10

Approved: Naik, Ashish 2018-01-12

Doc. Kind: Layout drawing

Project name: ±800kV, 6000MW HVDC Raigarh-Pugalur Terminals

Title: Pole4-Layout & Sections DC Yard

Status: Issued

Item designation: -

Resp dept: PGGI/DCHUBTPM

Rev ind: 01

Language: -

ABB AB - HVDC

Document number: 1JNL100484-563

Sheet/of: 5 / 11

We reserve all rights in this document and in the information contained therein. Reproduction, use or disclosure to third parties without express authority is strictly prohibited. © ABB AB, (SE)

This document is issued by means of a computerized system. The digitally stored original is electronically approved. The approved document has a name and date approved in the approved field. A manual signature is not required.

(A2)

ANNEXURE-H (POLE-4)

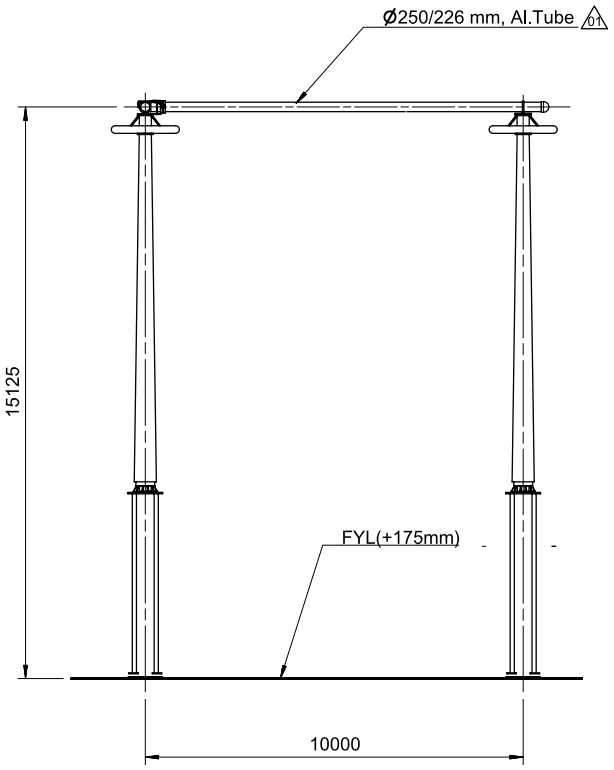

SECTION F-F

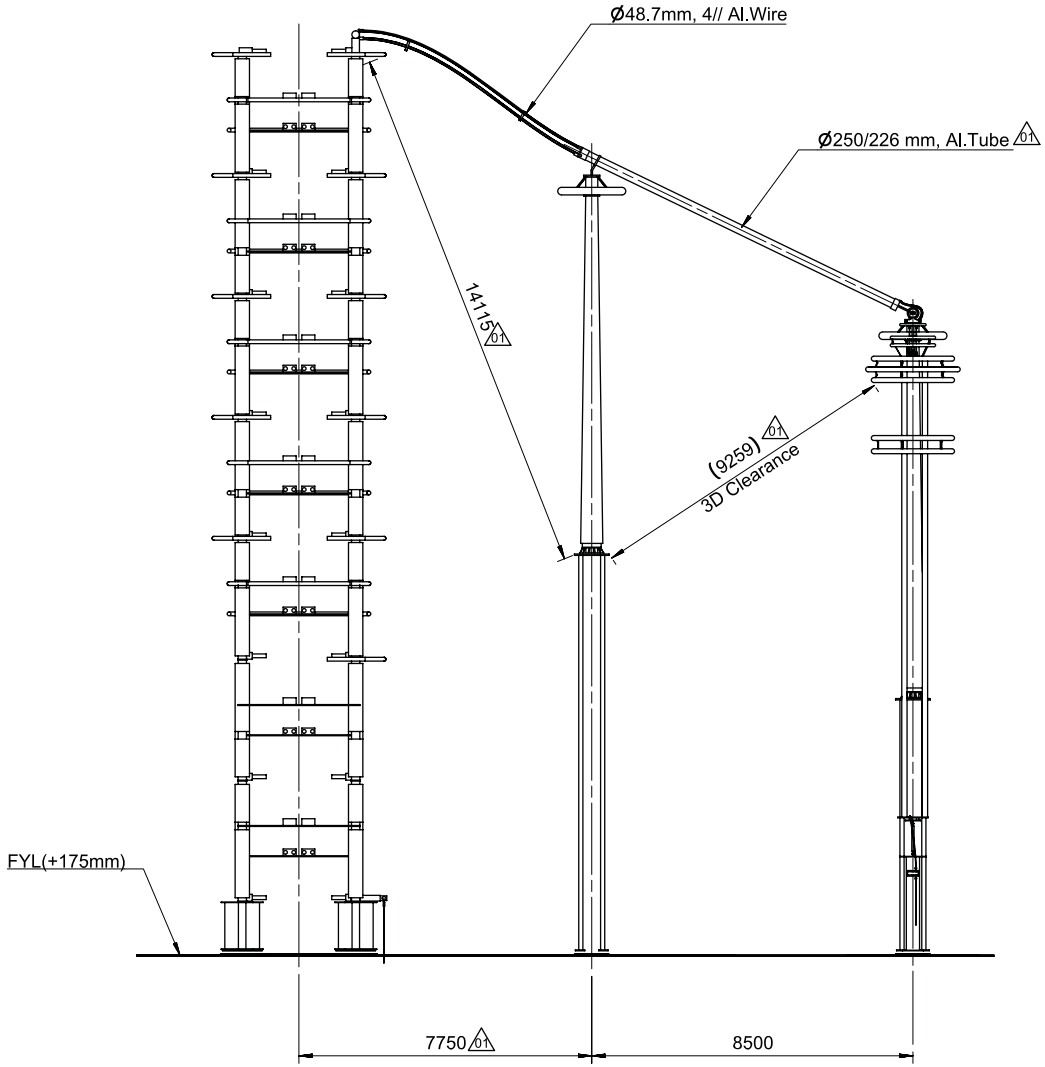

SECTION E-E

01	Revision made are marked. Also refer last page for revision notes.	Huzair, FM	Naik, Ashish	2018-06-29
Rev	Revision	Prepared	Approved	Date

Contract No: CC-CS/651-SR2/HVDC-3063/7G10/CA-I/5817-5821 dated 2017-01-25

Client:

POWER GRID CORPORATION OF INDIA LIMITED
(A Government of India Enterprise)

पावरग्रिड

BHARAT HEAVY ELECTRICALS LTD.
TRANSMISSION BUSINESS GROUP

Station Name: Raigarh

Classification No.: FJB-64

Based on: -

Prepared: Huzair, FM 2018-01-10

Approved: Naik, Ashish 2018-01-12

Doc. Kind: Layout drawing

Project name: ±800kV, 6000MW HVDC Raigarh-Pugalur Terminals

Title: Pole4-Layout & Sections DC Yard

Status: Issued

Item designation: -

Resp dept: PGGI/DCHUBTPM

Rev ind: 01

Language: -

ABB AB - HVDC

Document number: 1JNL100484-563

Sheet/of: 6 / 11

We reserve all rights in this document and in the information contained therein. Reproduction, use or disclosure to third parties without express authority is strictly forbidden. © ABB AB, (SE)

This document is issued by means of a computerized system. The digital stored original is electronically approved. The approved document has a name and approval date instead of a signature. A manual signature is not required.

(A2)

ANNEXURE-H (POLE-4)

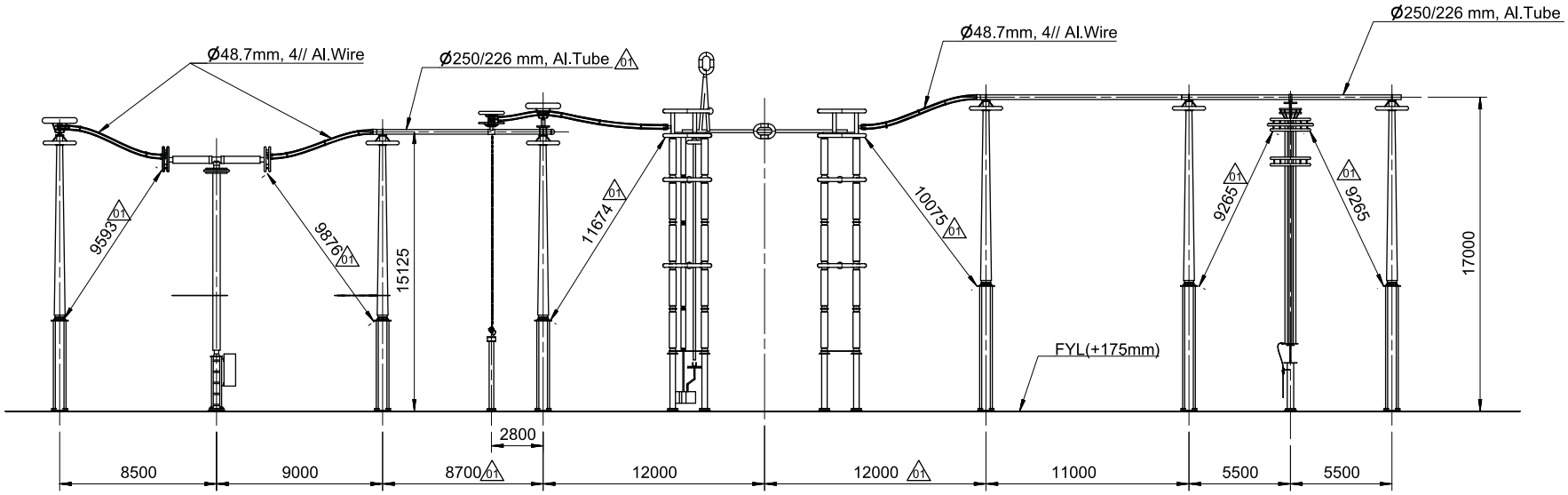

SECTION G-G

Rev	Revision	Prepared	Approved	Date
01	Revision made are marked. Also refer last page for revision notes.	Huzair, FM	Naik, Ashish	2018-06-29

Contract No: CC-CS/651-SR2/HVDC-3063/7G10/CA-I/5817-5821 dated 2017-01-25

Client:

POWER GRID CORPORATION OF INDIA LIMITED
(A Government of India Enterprise)

पावरग्रिड

BHARAT HEAVY ELECTRICALS LTD.
TRANSMISSION BUSINESS GROUP

Station Name: Raigarh

Classification No.: FJB-64

Based on: -

Prepared: Huzair, FM 2018-01-10

Approved: Naik, Ashish 2018-01-12

Doc. Kind: Layout drawing

Project name: ±800kV, 6000MW HVDC Raigarh-Pugalur Terminals

Title: Pole4-Layout & Sections
DC Yard

Status: Issued

Item designation: -

Resp dept: PGGI/DCHUBTPM

Rev ind: 01

Language: -

ABB AB - HVDC

Document number: 1JNL100484-563

Sheet/of: 7 / 11

We reserve all rights in this document and in the information contained therein. Reproduction, use or disclosure to third parties without express authority is strictly forbidden. © ABB AB, (SE)

This document is issued by means of a computerized system. The digitally stored original is electronically approved. The approved document has a name and date approved in the approved field. A manual signature is not required.

(A2)

ANNEXURE-H (POLE-4)

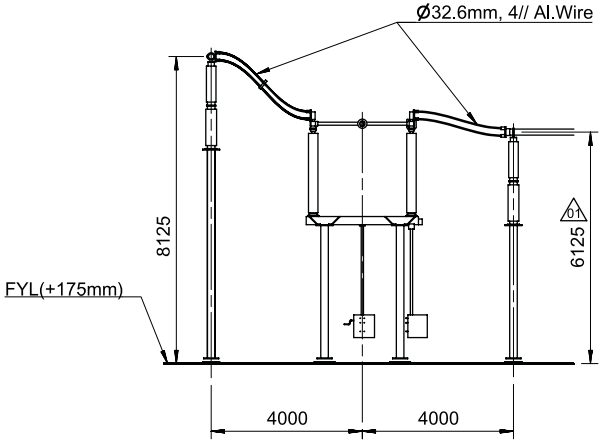

SECTION K-K

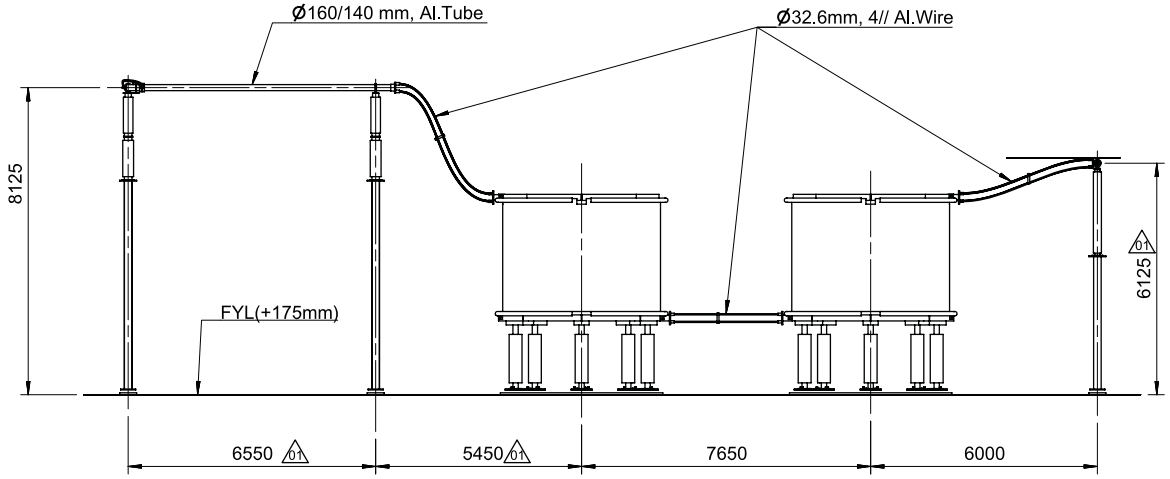

SECTION H-H

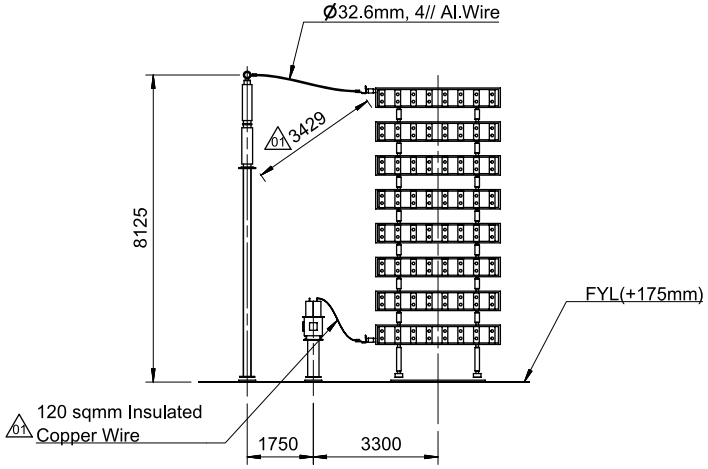

SECTION J-J

Rev	Revision	Prepared	Approved	Date
01	Revision made are marked. Also refer last page for revision notes.	Huzair, FM	Naik, Ashish	2018-06-29

Contract No: CC-CS/651-SR2/HVDC-3063/7G10/CA-I/5817-5821 dated 2017-01-25

Client: POWER GRID CORPORATION OF INDIA LIMITED (A Government of India Enterprise)

BHARAT HEAVY ELECTRICALS LTD. TRANSMISSION BUSINESS GROUP

Station Name: Raigarh

Classification No.: FJB-64

Based on: -

Prepared: Huzair, FM 2018-01-10

Approved: Naik, Ashish 2018-01-12

Doc. Kind: Layout drawing

Project name: ±800kV, 6000MW HVDC Raigarh-Pugalur Terminals

Title: Pole4-Layout & Sections DC Yard

Status: Issued

Item designation: -

Resp dept: PGGI/DCHUBTPM

Rev ind: 01

Language: -

ABB AB - HVDC

Document number: 1JNL100484-563

Sheet of: 8 / 11

We reserve all rights in this document and in the information contained therein. Reproduction, use or disclosure to third parties without express authority is strictly forbidden. © ABB AB, (SE)

This document is issued by means of a computerized system. The digitally stored original is electronically approved. The approved document has a name and approval date in the upper right corner. A manual signature is not required.

(A2)

ANNEXURE-H (POLE-4)

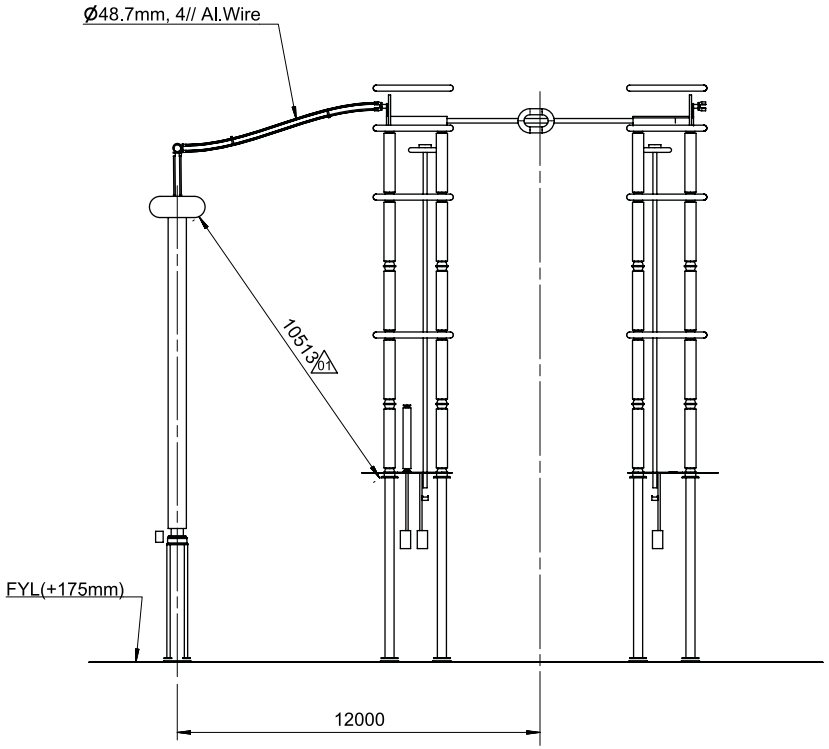

SECTION M-M

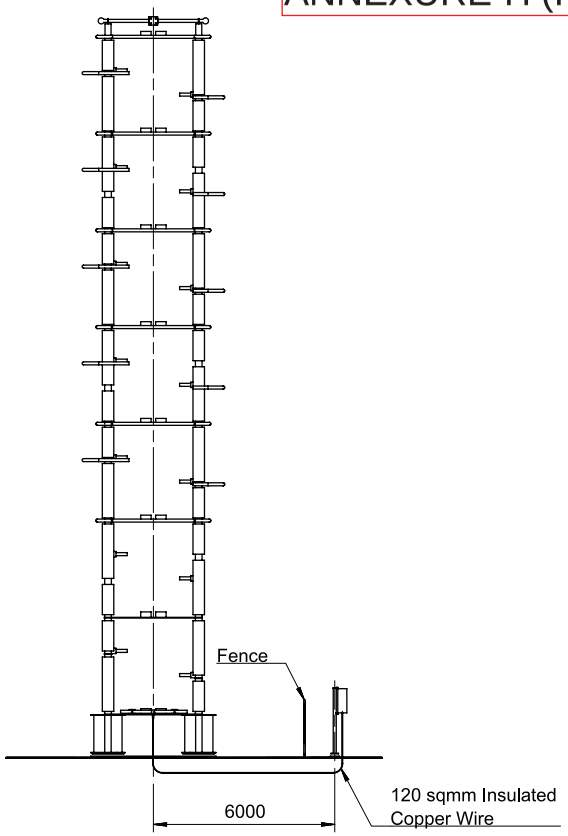

SECTION S-S 01

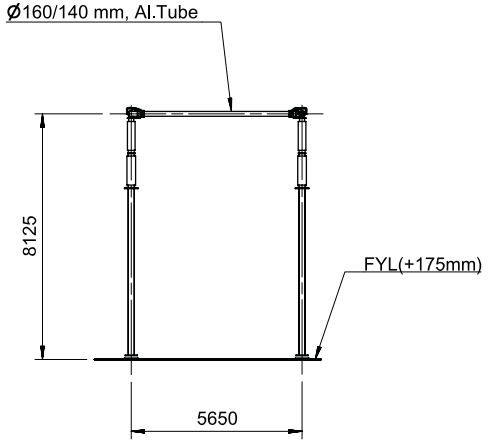

SECTION N-N

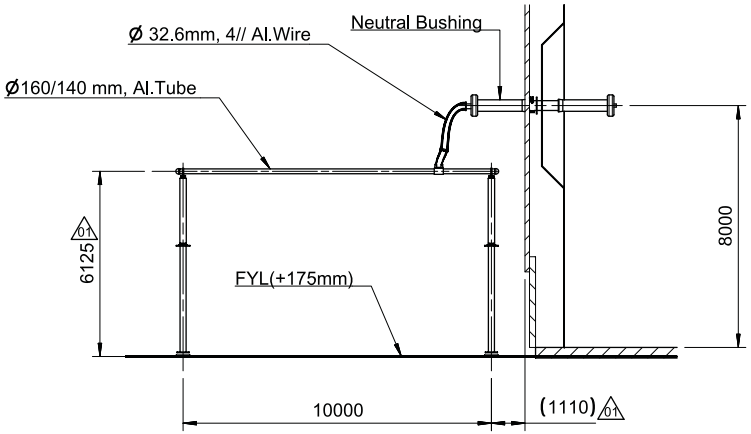

SECTION L-L

Rev	Revision	Prepared	Approved	Date
01	Revision made are marked. Also refer last page for revision notes.	Huzair, FM	Naik, Ashish	2018-06-29

Contract No: CC-CS/651-SR2/HVDC-3063/7G10/CA-I/5817-5821 dated 2017-01-25

Client:

POWER GRID CORPORATION OF INDIA LIMITED
(A Government of India Enterprise)

पावरग्रिड

BHARAT HEAVY ELECTRICALS LTD.
TRANSMISSION BUSINESS GROUP

Station Name: Raigarh

Classification No.: FJB-64

Based on: -

Prepared: Huzair, FM 2018-01-10

Approved: Naik, Ashish 2018-01-12

Doc. Kind: Layout drawing

Project name: ±800kV, 6000MW HVDC Raigarh-Pugalur Terminals

Title: Pole4-Layout & Sections
DC Yard

Status: Issued

Item designation: -

Resp dept: PGGI/DCHUBTPM

Rev ind: 01

Language: -

ABB AB - HVDC

Document number: 1JNL100484-563

Sheet/of: 9 / 11

(A2)

We reserve all rights in this document and in the information contained therein. Reproduction, use or disclosure to third parties without express authority is strictly prohibited. © ABB AB, (SE)

This document is issued by means of a computerized system. The digitally stored original is electronically approved. The approved document has a name and approval date in the approval field. A manual signature is not required.

ANNEXURE-H (POLE-4)

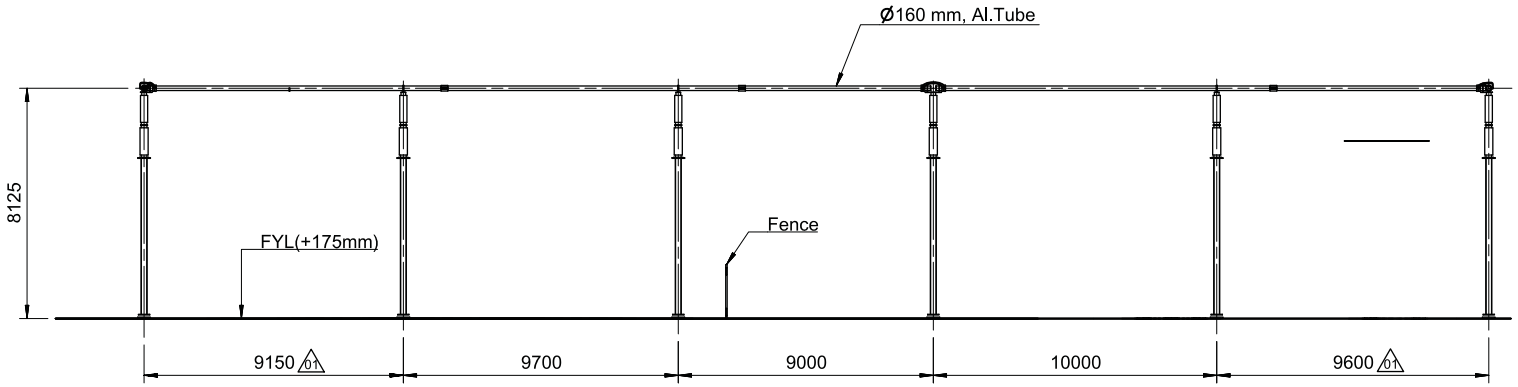

SECTION P-P

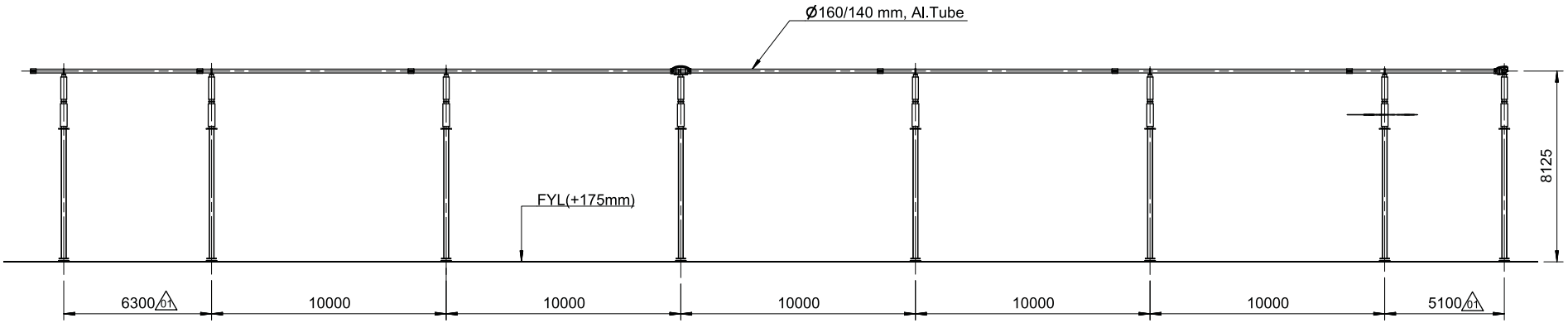

SECTION R-R

Rev	Revision	Prepared	Approved	Date
01	Revision made are marked. Also refer last page for revision notes.	Huzair, FM	Naik, Ashish	2018-06-29

Contract No: CC-CS/651-SR2/HVDC-3063/7G10/CA-I/5817-5821 dated 2017-01-25

Client: POWER GRID CORPORATION OF INDIA LIMITED (A Government of India Enterprise)

BHARAT HEAVY ELECTRICALS LTD. TRANSMISSION BUSINESS GROUP

Station Name: Raigarh

Classification No.: FJB-64

Based on: -

Prepared: Huzair, FM 2018-01-10

Approved: Naik, Ashish 2018-01-12

Doc. Kind: Layout drawing

Project name: ±800kV, 6000MW HVDC Raigarh-Pugalur Terminals

Title: Pole4-Layout & Sections DC Yard

Status: Issued

Item designation: -

Resp dept: PGGI/DCHUBTPM

Rev ind: 01

Language: -

ABB AB - HVDC

Document number: 1JNL100484-563

Sheet 10 of 11

We reserve all rights in this document and in the information contained therein. Reproduction, use or disclosure to third parties without express authority is strictly forbidden. © ABB AB, (SE)

This document is issued by means of a computerized system. The digital stored original is electronically approved. The approved document has a name and date stamp. The approved document is a read only pdf. A manual signature is not required.

(A2)

ANNEXURE-H (POLE-4)

Revision History :

Revision No.	Date	Sheet No.	Revision Note
01	28.06.2018	Sheet 1	Notes updated
		Sheet 2	Equipment North East Coordinates value added
		Sheet 3	Section Line S-S are added
		Sheet 4	Dimensions updated
		Sheet 5	Dimensions and Tube size updated
		Sheet 6	Dimensions and Tube size updated
		Sheet 7	Dimensions and Tube size updated
		Sheet 8	Dimensions updated
		Sheet 9	Dimensions updated & Section S-S are added
		Sheet 10	Dimensions updated

We reserve all rights in this document and in the information contained therein. Reproduction, use or disclosure to third parties without express authority is strictly forbidden. © ABB AB, 1998

This document is issued by means of a computerized system. The digitally stored original is electronically approved. The approved document has a name and signature in the computer system. A manual signature is not required.

Rev	Revision	Prepared	Approved	Date
01	Revision made are marked. Also refer last page for revision notes.	Huzair, FM	Naik, Ashish	2018-06-29

Contract No: CC-CS/651-SR2/HVDC-3063/7G10/CA-I/5817-5821 dated 2017-01-25

Client:

POWER GRID CORPORATION OF INDIA LIMITED
(A Government of India Enterprise)

पावरग्रिड

BHARAT HEAVY ELECTRICALS LTD.
TRANSMISSION BUSINESS GROUP

Station Name: Raigarh

Classification No.: FJB-64

Based on: -

Prepared: Huzair, FM 2018-01-10

Approved: Naik, Ashish 2018-01-12

Doc. Kind: Layout drawing

Project name: ±800kV, 6000MW HVDC Raigarh-Pugalur Terminals

Title: Pole4_Layout&Sections DC Yard

Status: Issued

Resp dept: PGGI/DCHUBTPM

Rev ind: 01

Item designation: -

Language: -

ABB AB - HVDC

Document number: 1JNL100484-563

Sheet/of: 11 / 11

(A2)

ANNEXURE-I

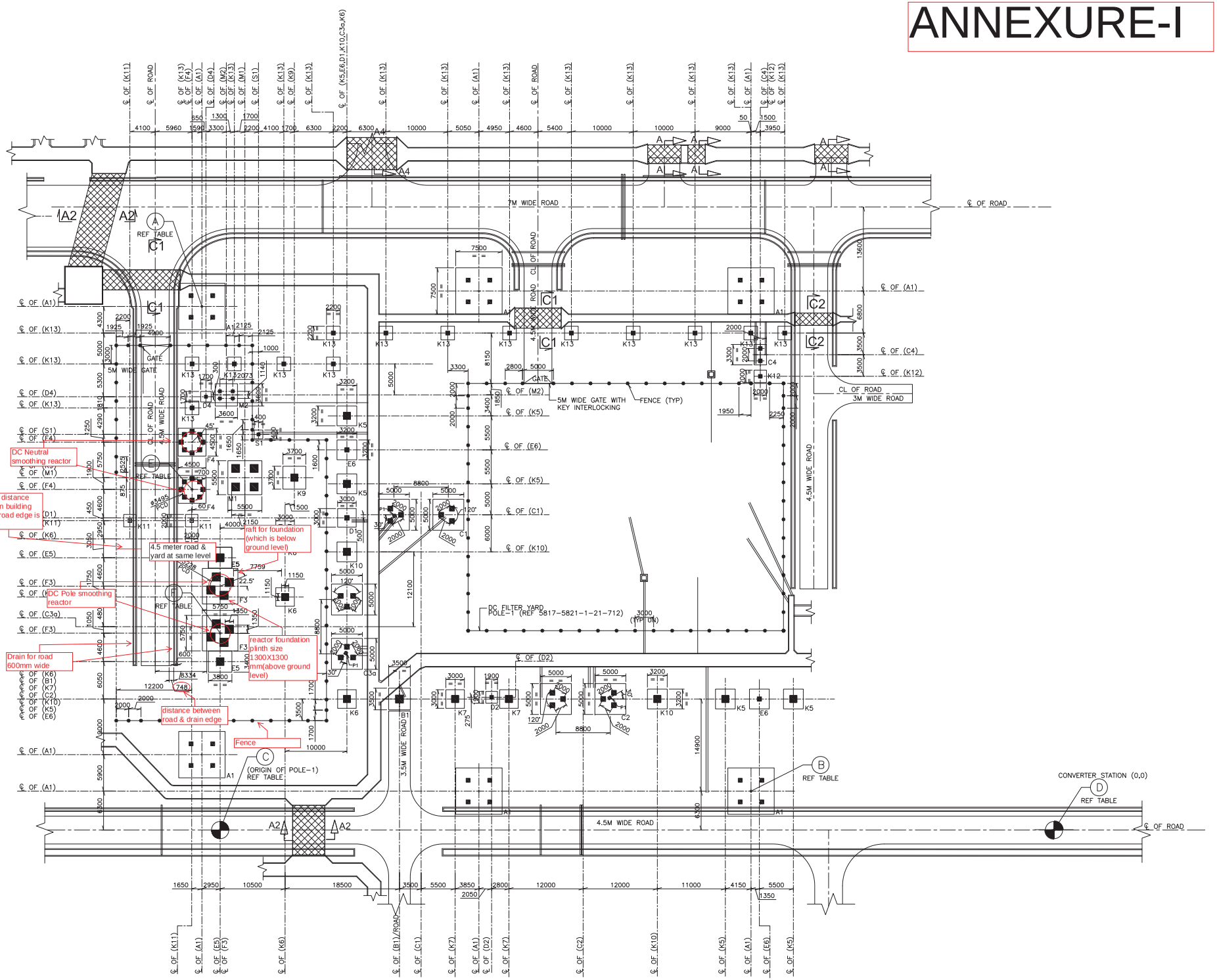

FOUNDATION LAYOUT OF DC YARD POLE-1

1:300

ANNEXURE-I

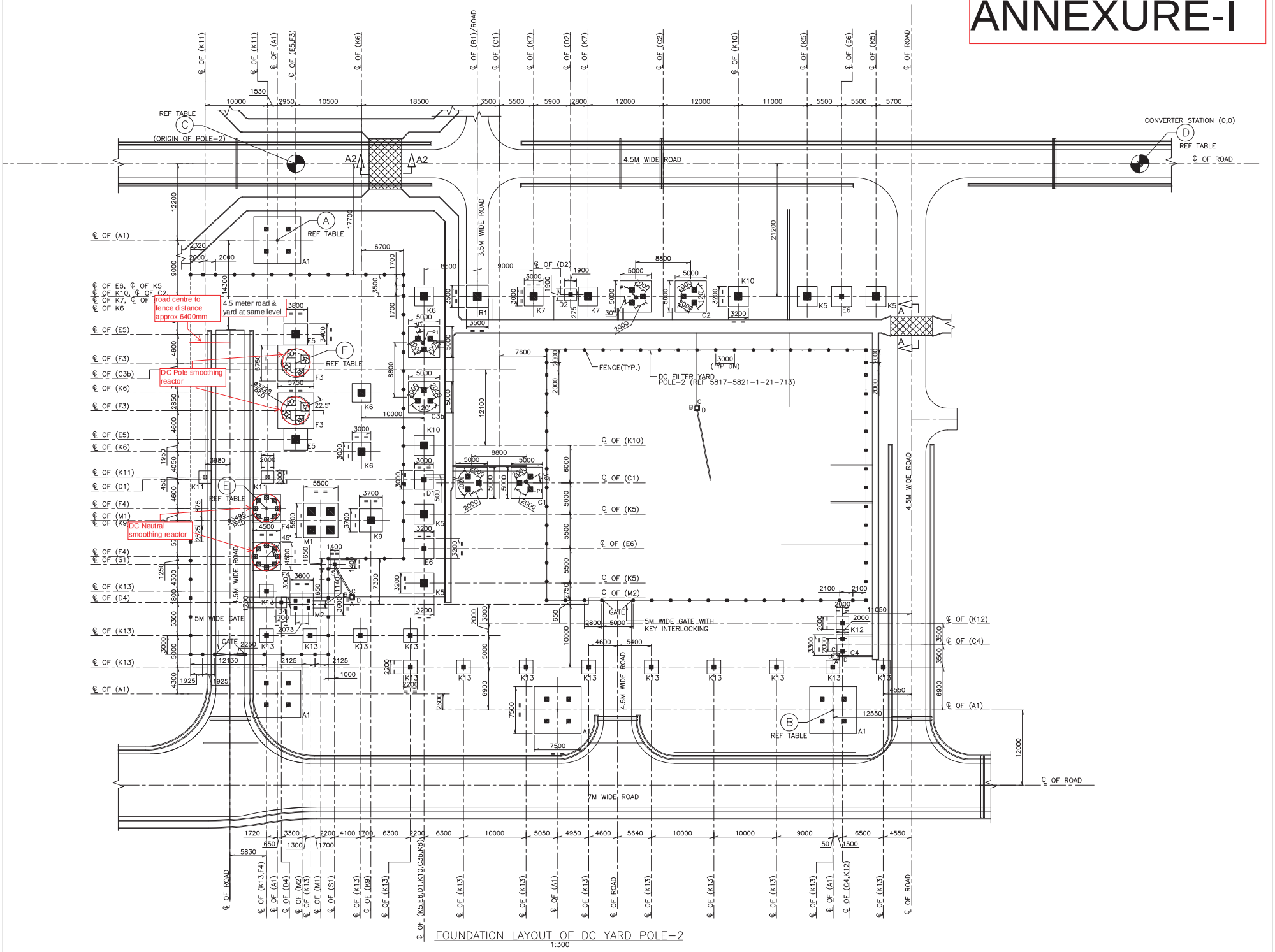

FOUNDATION LAYOUT OF DC YARD POLE-2

1:300

ANNEXURE-I

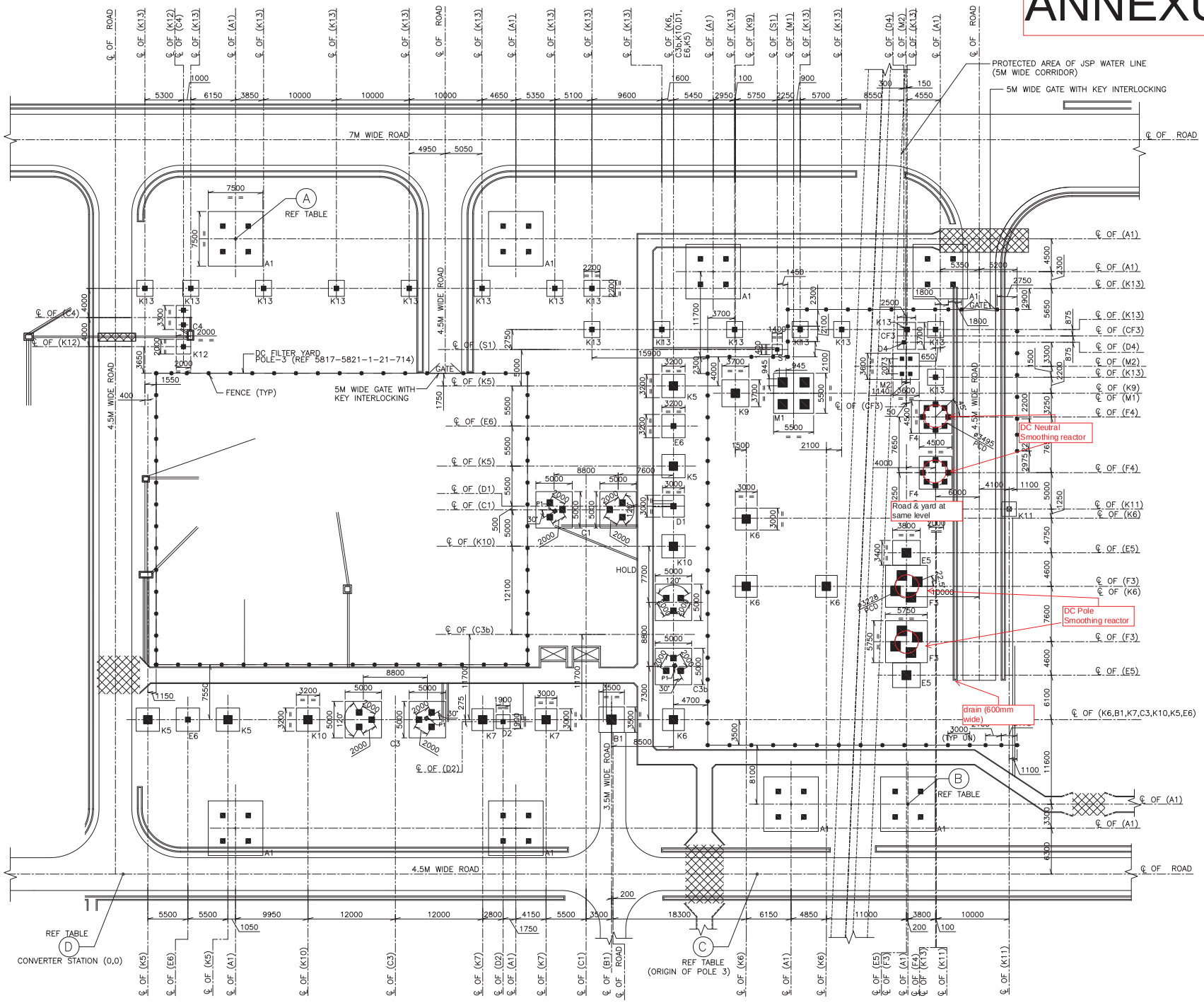

FOUNDATION LAYOUT OF DC YARD POLE-3

1:300

ANNEXURE-I

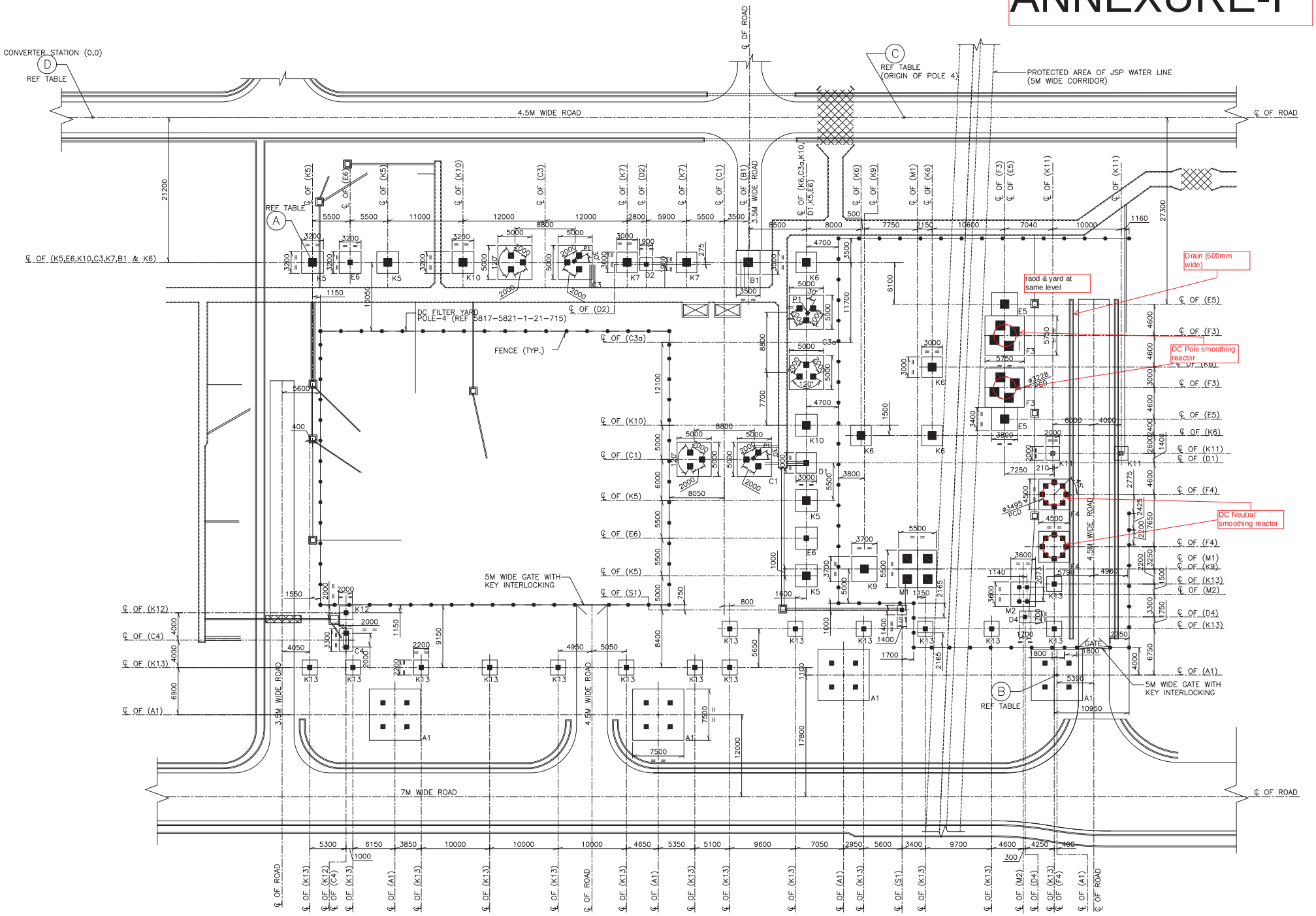

FOUNDATION LAYOUT OF DC YARD POLE-4

1:300

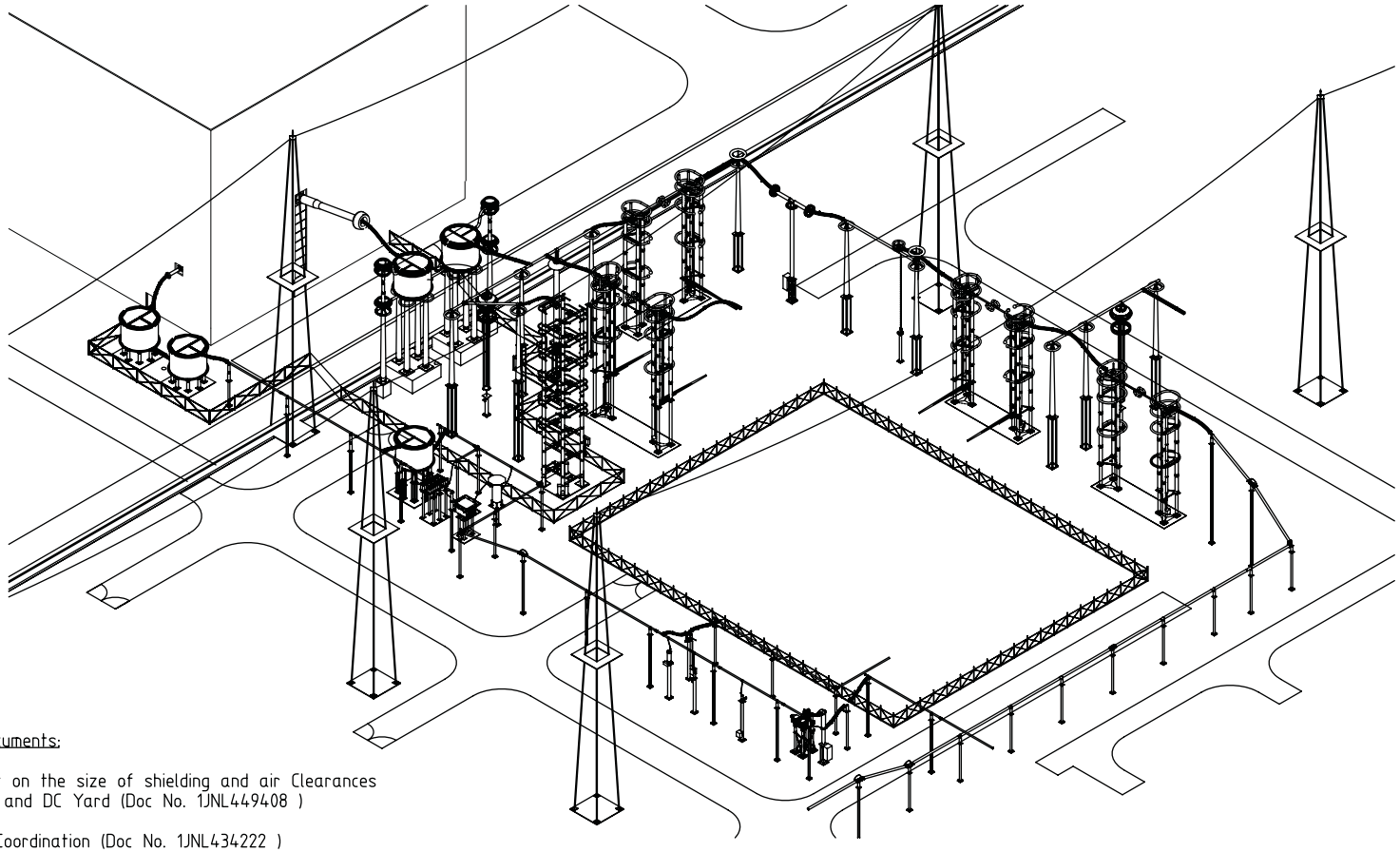

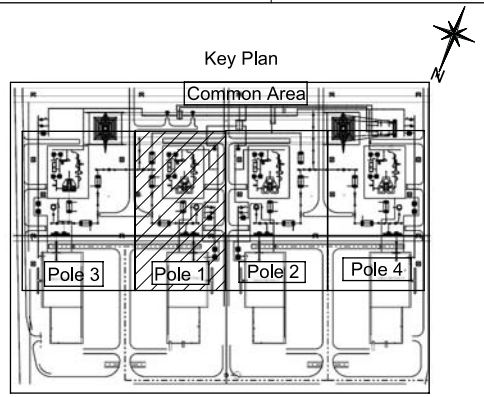

ANNEXURE-J (POLE-1)

Reference Documents:

1. Requirement on the size of shielding and air Clearances for Valvehall and DC Yard (Doc No. 1JNL449408)

2. Insulation Coordination (Doc No. 1JNL434222)

3. Main Circuit Single Line Diagram, Pugalur (Doc No. 1JNL437657)

4. DC Yard Layout and section Overview (Doc No. 1JNL100485-230)

Notes: 01

1. All Dimensions are in mm unless otherwise specified.
2. Conductor Data
Pole Bus:
- Ø 250/226 mm Al.Tube
- Ø 48.7mm, AAC
Neutral Bus:
- Ø 250/230 mm Al.Tube
- Ø 160/140mm Al.Tube
- Ø 32.6mm, AAC
Damping wires:
- Ø 48.7mm, AAC for Ø 250/226 & Ø 250/230 mm Al.Tube (Length of the damping wire shall be = 2/3 of length of the busbar tube.)
- Ø 29mm, AAC for Ø 160/140mm Al.Tube (Length of the damping wire shall be = 2/3 of length of the busbar tube.)
3. Refer OGA drawing for slope details 1JNL100336-120 sheet.2

Rev	Revision	Prepared	Approved	Date
01	Revisions made are marked. Also refer last page for revision notes.	Thiruchunapali, Vijaya, Bhaskar	Naik, Ashish	2018-06-26

Contract No: CC-CS/651-SR2/HVDC-3063/7G10/CA-I/5817-5821 dated 2017-01-25

Client:

POWER GRID CORPORATION OF INDIA LIMITED
(A Government of India Enterprise)

पावरग्रिड

BHARAT HEAVY ELECTRICALS LTD.
TRANSMISSION BUSINESS GROUP

Station Name: Pugalur

Classification No.: FJB-64

Based on

Prepared: Thiruchunapali, Vijaya, Bhaskar 2018-01-10

Approved: Naik, Ashish 2018-01-23

Doc. Kind: Layout drawing

Project name: ±800kV, 6000MW HVDC Raigarh-Pugalur Terminals

Title: Pole1 Layout & Sections
DC Yard

Status: Issued

Resp dept: PGGI/DCHUBTPM

Rev ind: 01

Item designation

Language

ABB AB - HVDC

Document number: 1JNL100484-560

Sheet 1 of 1 / 13

(A2)

We reserve all rights in this document and in the information contained therein. Reproduction, use or disclosure to third parties without express authority is strictly forbidden. © ABB AB, 2018

This document is issued by means of a computerized system. The digitally stored original is electronically approved. The approved document has a name and approval date in the upper right corner. A manual signature is not required.

ANNEXURE-J (POLE-1)

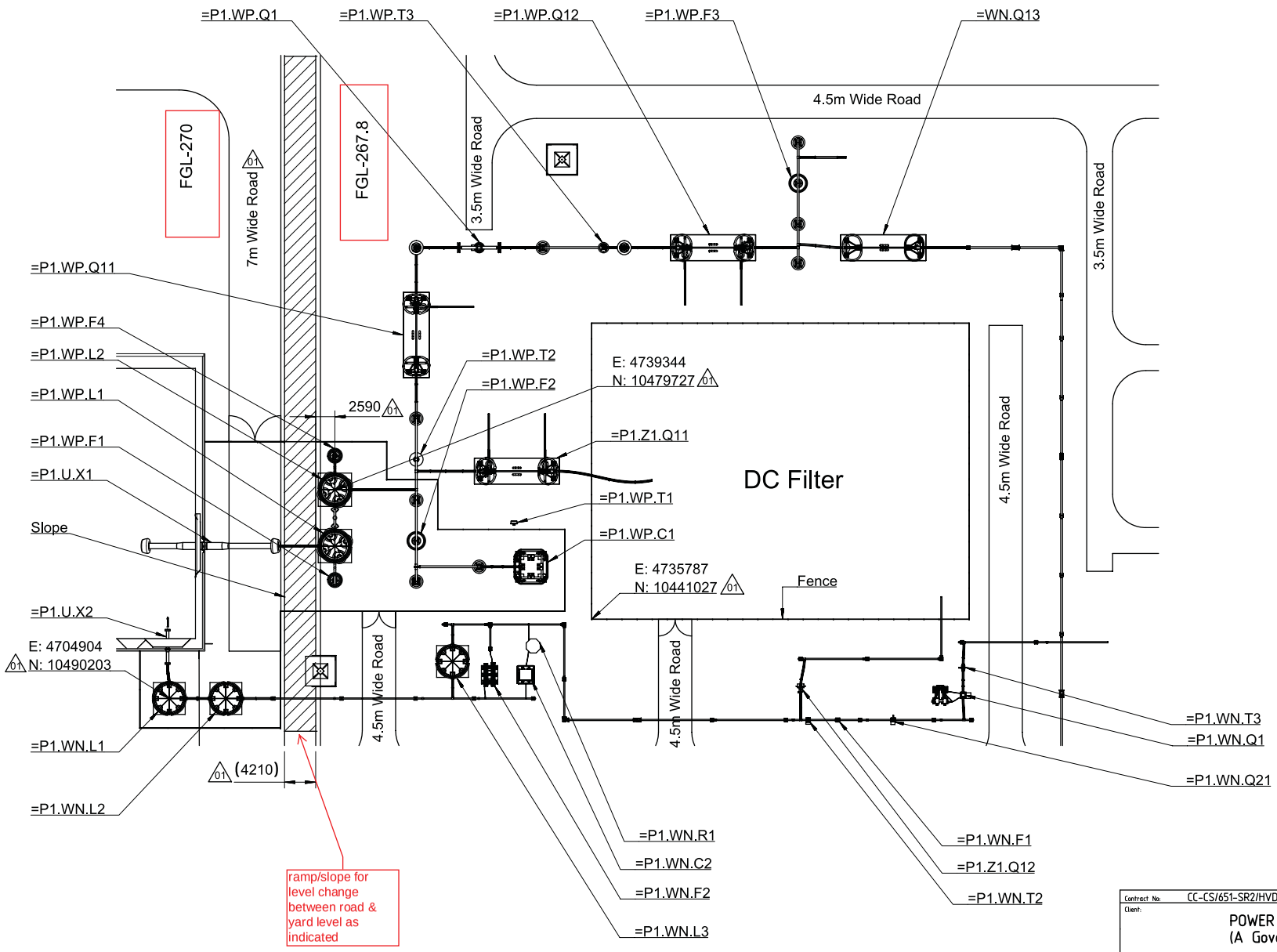

Rev	Revision	Prepared	Approved	Date
01	Revisions made are marked. Also refer last page for revision notes.	Thiruchunapali, Vijaya, Bhaskar	Naik, Ashish	2018-06-26

Contract No: CC-CS/651-SR2/HVDC-3063/7G10/CA-I/5817-5821 dated 2017-01-25

Client:

POWER GRID CORPORATION OF INDIA LIMITED
(A Government of India Enterprise)

पावरग्रिड

BHARAT HEAVY ELECTRICALS LTD. TRANSMISSION BUSINESS GROUP

Station Name: Pugalur

Classification No.: FJB-64

Based on

Prepared: Thiruchunapali, Vijaya, Bhaskar 2018-01-10

Approved: Naik, Ashish 2018-01-23

Doc. Kind: Layout drawing

Project name: ±800kV, 6000MW HVDC Raigarh-Pugalur Terminals

Title: Pole1 Layout & Sections DC Yard

Status: Issued

Resp dept: PGGI/DCHUBTPM

Rev ind: 01

Item designation

Language

ABB AB - HVDC

Document number: 1JNL100484-560

Sheet of: 2 / 13

(A2)

We reserve all rights in this document and in the information contained therein. Reproduction, use or disclosure to third parties without express authority is strictly forbidden. © ABB AB, 2018

This document is issued by means of a computerized system. The digitally stored original is electronically approved. The approved document has a name and date-stamp. The approved document is a read-only pdf. A manual signature is not required.

ANNEXURE-J (POLE-1)

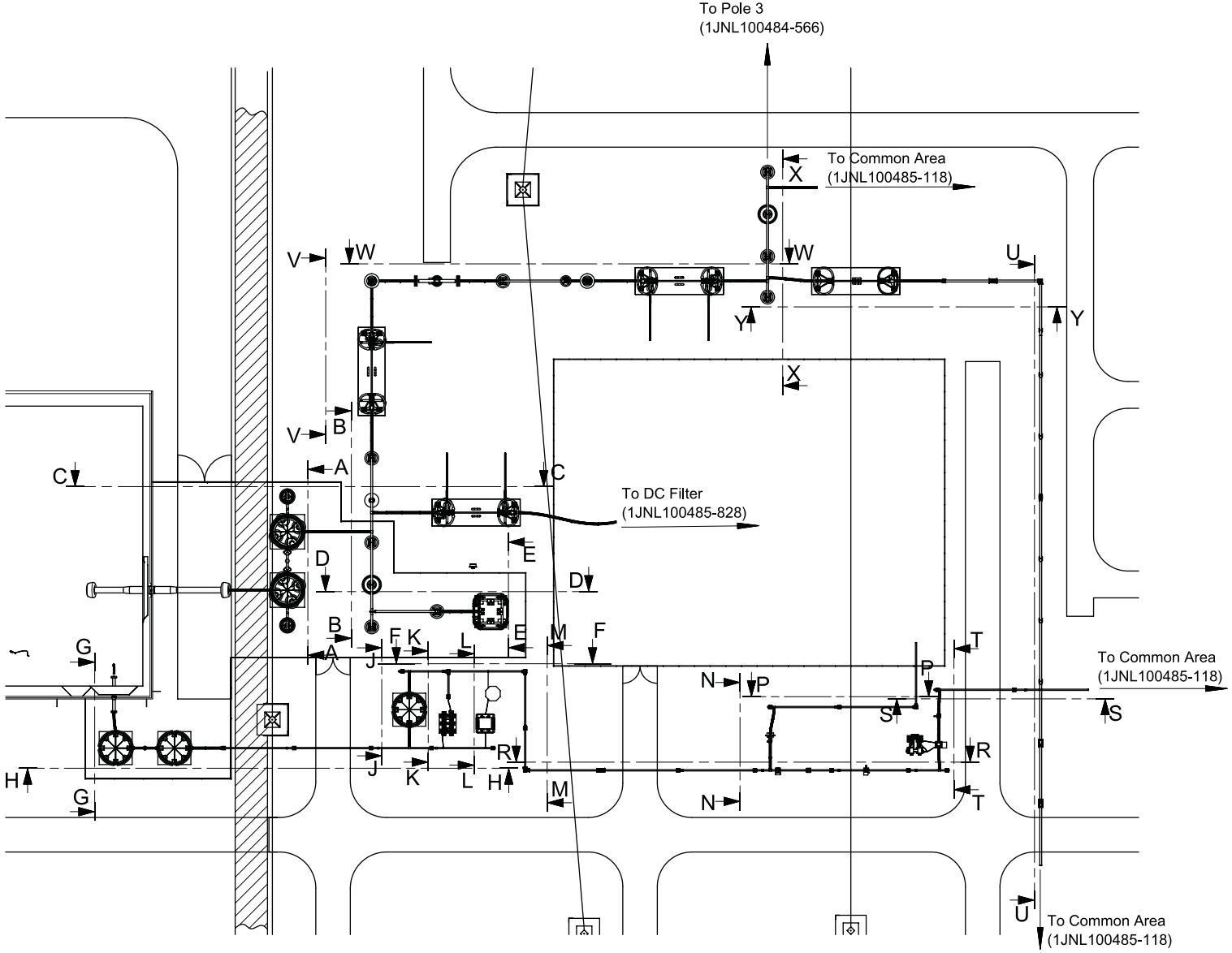

Note:
Section A-A See Sheet 04
Section B-B See Sheet 04

Section C-C See Sheet 05

Section D-D See Sheet 06
Section E-E See Sheet 06

Section F-F See Sheet 07
Section G-G See Sheet 07
Section H-H See Sheet 07

Section J-J See Sheet 08
Section K-K See Sheet 08
Section L-L See Sheet 08
Section M-M See Sheet 08
Section N-N See Sheet 08

Section P-P See Sheet 09
Section R-R See Sheet 09
Section S-S See Sheet 09

Section T-T See Sheet 10
Section U-U See Sheet 10
Section V-V See Sheet 10

Section W-W See Sheet 11
Section X-X See Sheet 11

Section Y-Y See Sheet 12

Rev	Revision	Prepared	Approved	Date
01	Revisions made are marked. Also refer last page for revision notes.	Thiruchunapali, Vijaya, Bhaskar	Naik, Ashish	2018-06-26

Contract No: CC-CS/651-SR2/HVDC-3063/7G10/CA-I/5817-5821 dated 2017-01-25

Client: POWER GRID CORPORATION OF INDIA LIMITED (A Government of India Enterprise)

BHARAT HEAVY ELECTRICALS LTD. TRANSMISSION BUSINESS GROUP

Station Name: Pugalur

Classification No.: FJB-64

Based on

Prepared: Thiruchunapali, Vijaya, Bhaskar 2018-01-10

Approved: Naik, Ashish 2018-01-23

Doc. Kind: Layout drawing

Project name: ±800kV, 6000MW HVDC Raigarh-Pugalur Terminals

Title: Pole1 Layout & Sections DC Yard

Status: Issued

Resp dept: PGGI/DCHUBTPM

Rev ind: 01

Item designation

Language

ABB AB - HVDC

Document number: 1JNL100484-560

Sheet/of 3 / 13

(A2)

We reserve all rights in this document and in the information contained therein. Reproduction, use or disclosure to third parties without express authority is strictly forbidden. © ABB AB, 2018

This document is issued by means of a computerized system. The digital stored original is electronically approved. The approved document has a name and approval date in the approval field. A manual signature is not required.

ANNEXURE-J (POLE-1)

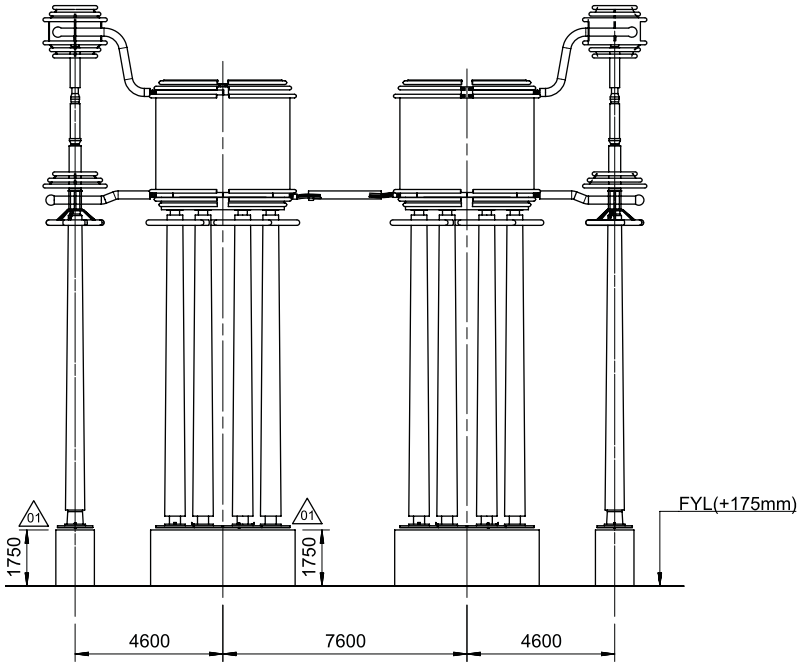

01 SECTION A-A

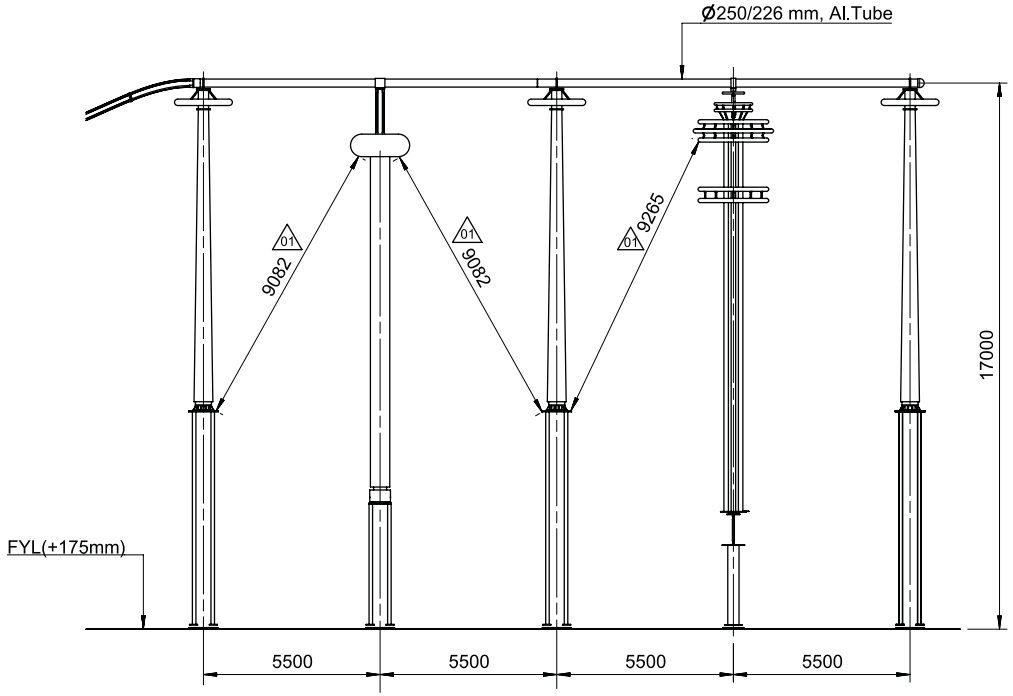

SECTION B-B

We reserve all rights in this document and in the information contained therein. Reproduction, use or disclosure to third parties without express authority is strictly forbidden. © ABB AB, 2018

This document is issued by means of a computerized system. The digitally stored original is electronically approved. The approved document has a name and date approved in the approval field. A manual signature is not required.

Rev	Revision	Prepared	Approved	Date
01	Revisions made are marked. Also refer last page for revision notes.	Thiruchunapali, Vijaya, Bhaskar	Naik, Ashish	2018-06-26

Contract No: CC-CS/651-SR2/HVDC-3063/7G10/CA-I/5817-5821 dated 2017-01-25

Client:

POWER GRID CORPORATION OF INDIA LIMITED
(A Government of India Enterprise)

पावरग्रिड

BHARAT HEAVY ELECTRICALS LTD.
TRANSMISSION BUSINESS GROUP

Station Name: Pugalur

Classification No.: FJB-64

Based on

Prepared: Thiruchunapali, Vijaya, Bhaskar 2018-01-10

Approved: Naik, Ashish 2018-01-23

Doc. Kind: Layout drawing

Project name: ±800kV, 6000MW HVDC Raigarh-Pugalur Terminals

Title: Pole1 Layout & Sections
DC Yard

Status: Issued

Resp dept: PGGI/DCHUBTPM

Rev ind: 01

Item designation

Language

ABB AB - HVDC

Document number: 1JNL100484-560

Sheet 4 / 13

(A2)

ANNEXURE-J (POLE-1)

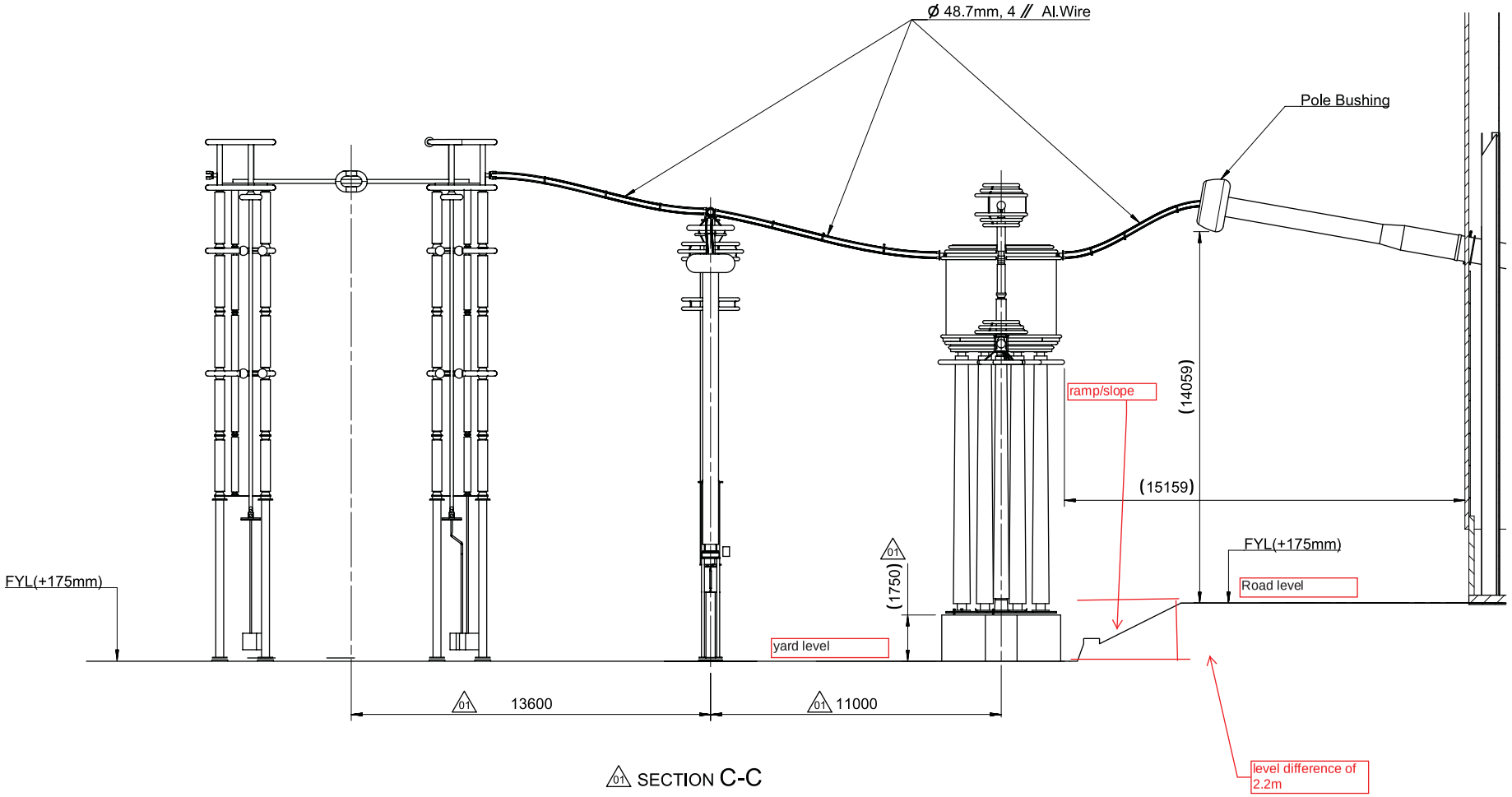

01 SECTION C-C

Rev	Revision	Prepared	Approved	Date
01	Revisions made are marked. Also refer last page for revision notes.	Thiruchunapali, Vijaya, Bhaskar	Naik, Ashish	2018-06-26

Contract No: CC-CS/651-SR2/HVDC-3063/7G10/CA-I/5817-5821 dated 2017-01-25

Client: POWER GRID CORPORATION OF INDIA LIMITED (A Government of India Enterprise)

BHARAT HEAVY ELECTRICALS LTD. TRANSMISSION BUSINESS GROUP

Station Name: Pugalur

Classification No.: FJB-64

Based on

Prepared: Thiruchunapali, Vijaya, Bhaskar 2018-01-10

Approved: Naik, Ashish 2018-01-23

Doc. Kind: Layout drawing

Project name: ±800kV, 6000MW HVDC Raigarh-Pugalur Terminals

Title: Pole1 Layout & Sections DC Yard

Status: Issued

Resp dept: PGGI/DCHUBTPM

Rev ind: 01

Item designation

Language

ABB AB - HVDC

Document number: 1JNL100484-560

Sheet/of: 5 / 13

We reserve all rights in this document and in the information contained therein. Reproduction, use or disclosure to third parties without express authority is strictly prohibited. © ABB AB, 2018

This document is issued by means of a computerized system. The digital stored original is electronically approved. The approved document has a name and date instead of a handwritten signature. A manual signature is not required.

(A2)

ANNEXURE-J (POLE-1)

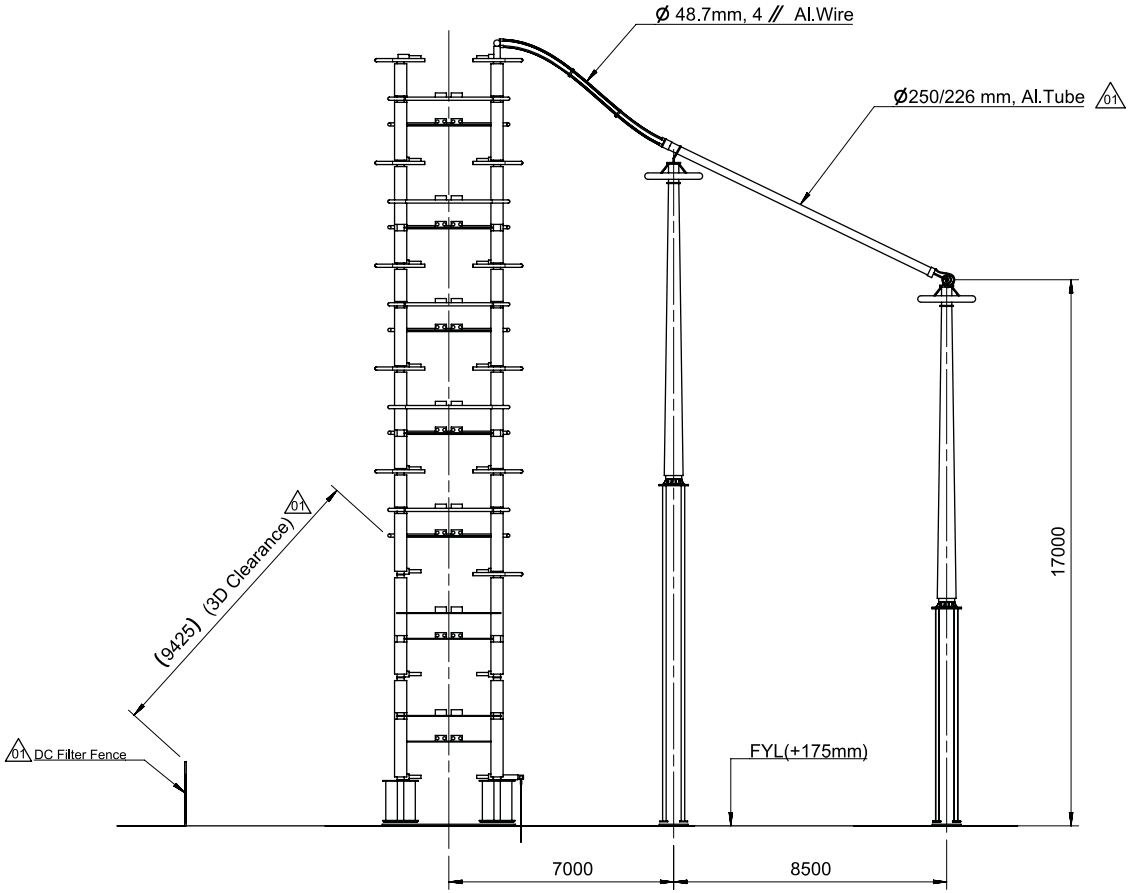

01 SECTION D-D

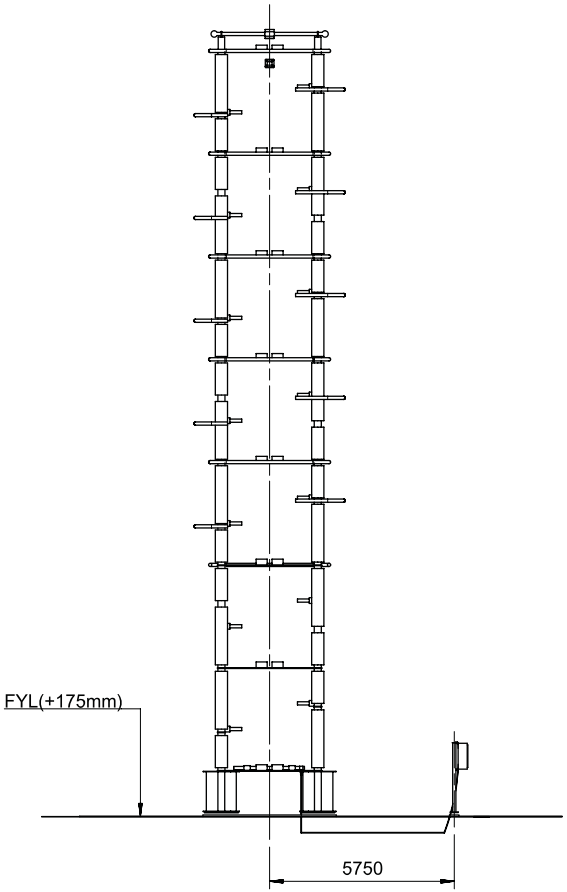

SECTION E-E

Rev	Revision	Prepared	Approved	Date
01	Revisions made are marked. Also refer last page for revision notes.	Thiruchunapali, Vijaya, Bhaskar	Naik, Ashish	2018-06-26

Contract No: CC-CS/651-SR2/HVDC-3063/7G10/CA-I/5817-5821 dated 2017-01-25

Client: POWER GRID CORPORATION OF INDIA LIMITED (A Government of India Enterprise)

BHARAT HEAVY ELECTRICALS LTD. TRANSMISSION BUSINESS GROUP

Station Name: Pugalur

Classification No.: FJB-64

Based on

Prepared: Thiruchunapali, Vijaya, Bhaskar 2018-01-10

Approved: Naik, Ashish 2018-01-23

Doc. Kind: Layout drawing

Project name: ±800kV, 6000MW HVDC Raigarh-Pugalur Terminals

Title: Pole1 Layout & Sections DC Yard

Status: Issued

Resp dept: PGGI/DCHUBTPM

Rev ind: 01

Item designation

Language

ABB AB - HVDC

Document number: 1JNL100484-560

Sheet/of: 6 / 13

We reserve all rights in this document and in the information contained therein. Reproduction, use or disclosure to third parties without express authority is strictly prohibited. © ABB AB, (SE)

This document is issued by means of a computerized system. The digital stored original is electronically approved. The approved document has a name and date approved in the approved field. A manual signature is not required.

(A2)

ANNEXURE-J (POLE-1)

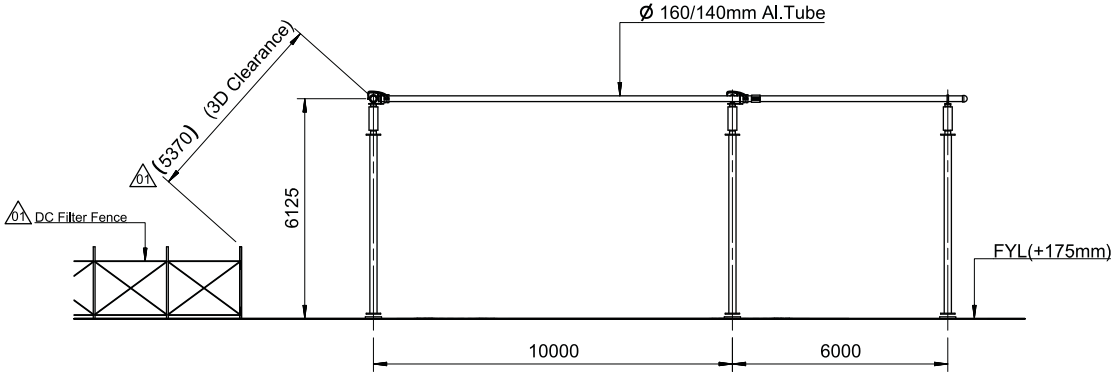

SECTION F-F 01

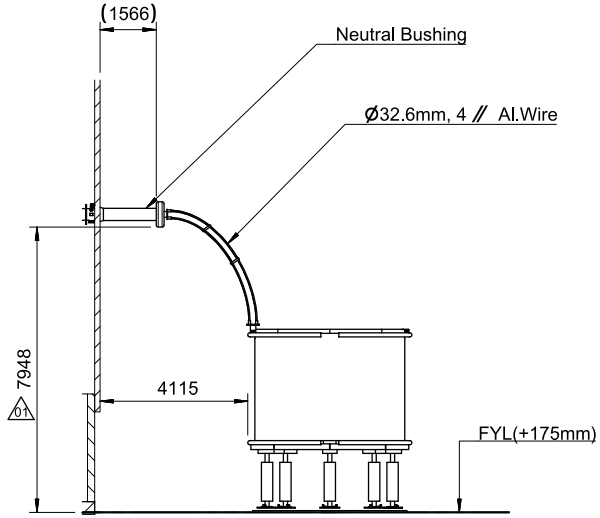

SECTION G-G

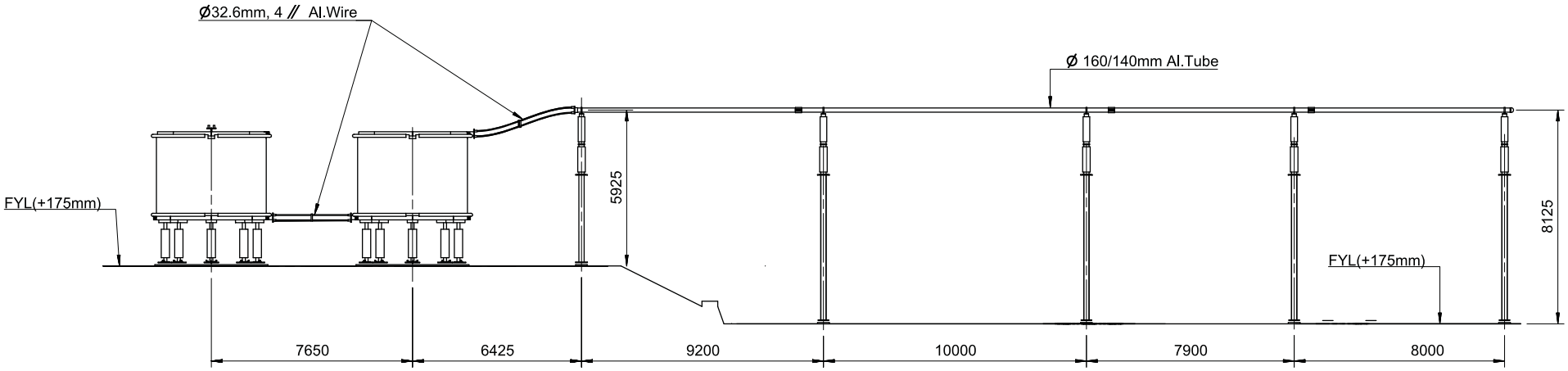

01 SECTION H-H

Rev	Revision	Prepared	Approved	Date
01	Revisions made are marked. Also refer last page for revision notes.	Thiruchunapali, Vijaya, Bhaskar	Naik, Ashish	2018-06-26

Contract No: CC-CS/651-SR2/HVDC-3063/7G10/CA-I/5817-5821 dated 2017-01-25

Client:

POWER GRID CORPORATION OF INDIA LIMITED
(A Government of India Enterprise)

पावरग्रिड

BHARAT HEAVY ELECTRICALS LTD. TRANSMISSION BUSINESS GROUP

Station Name: Pugalur

Classification No.: FJB-64

Based on

Prepared: Thiruchunapali, Vijaya, Bhaskar 2018-01-10

Approved: Naik, Ashish 2018-01-23

Doc. Kind: Layout drawing

Project name: ±800kV, 6000MW HVDC Raigarh-Pugalur Terminals

Title: Pole1 Layout & Sections Dc Yard

Status: Issued

Resp dept: PGGI/DCHUBTPM

Rev ind: 01

Item designation

Language

ABB AB - HVDC

Document number: 1JNL100484-560

Sheet/of: 7 / 13

(A2)

We reserve all rights in this document and in the information contained therein. Reproduction, use or disclosure to third parties without express authority is strictly prohibited. © ABB AB, (SE)

This document is issued by means of a computerized system. The digital stored original is electronically approved. The approved document has a name and approval date instead of a signature. A manual signature is not required.

ANNEXURE-J (POLE-1)

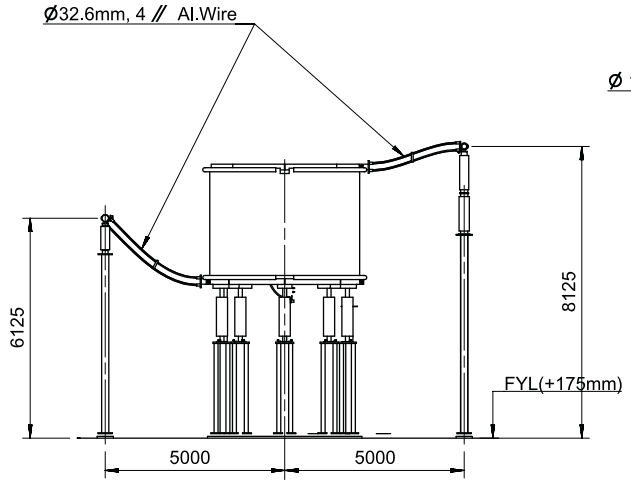

SECTION J-J

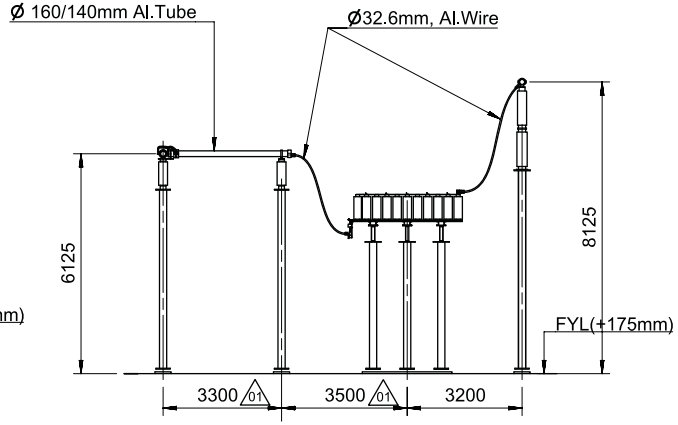

SECTION K-K

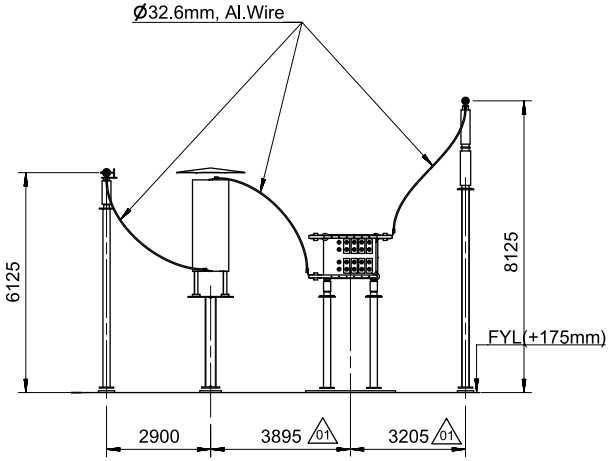

SECTION L-L

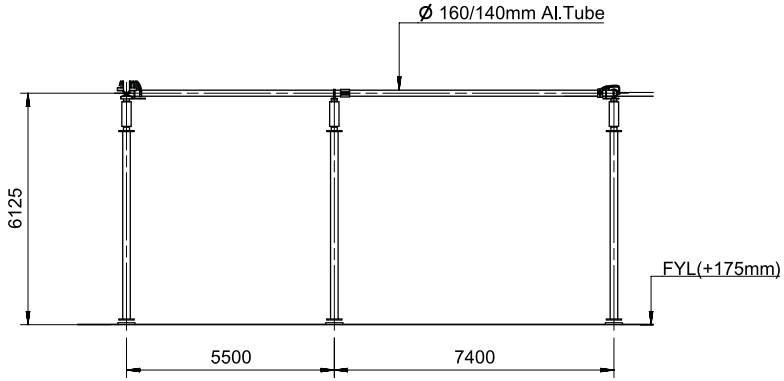

SECTION M-M

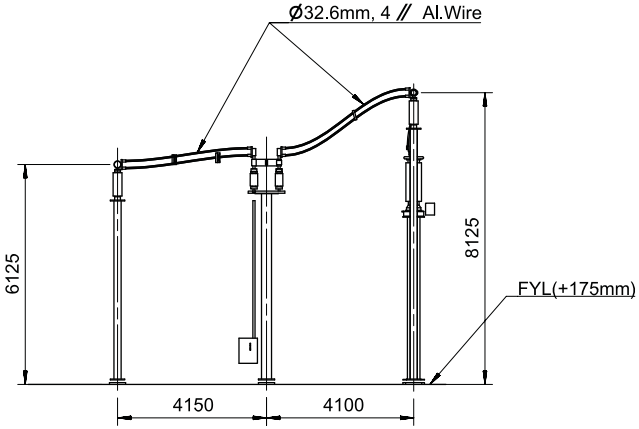

SECTION N-N

Rev	Revision	Prepared	Approved	Date
01	Revisions made are marked. Also refer last page for revision notes.	Thiruchunapali, Vijaya, Bhaskar	Naik, Ashish	2018-06-26

Contract No: CC-CS/651-SR2/HVDC-3063/7G10/CA-I/5817-5821 dated 2017-01-25

Client: POWER GRID CORPORATION OF INDIA LIMITED (A Government of India Enterprise)

BHARAT HEAVY ELECTRICALS LTD. TRANSMISSION BUSINESS GROUP

Station Name: Pugalur

Classification No.: FJB-64

Based on

Prepared: Thiruchunapali, Vijaya, Bhaskar 2018-01-10

Approved: Naik, Ashish 2018-01-23

Doc. Kind: Layout drawing

Project name: ±800kV, 6000MW HVDC Raigarh-Pugalur Terminals

Title: Pole1 Layout & Sections DC Yard

Status: Issued

Resp dept: PGGI/DCHUBTPM

Rev ind: 01

Item designation

Language

ABB AB - HVDC

Document number: 1JNL100484-560

Sheet of 8 / 13

We reserve all rights in this document and in the information contained therein. Reproduction, use or disclosure to third parties without express authority is strictly prohibited. © ABB AB, (SE)

This document is issued by means of a computerized system. The digitally stored original is electronically approved. The approved document has a name and date stamp in the upper right corner. A manual signature is not required.

(A2)

ANNEXURE-J (POLE-1)

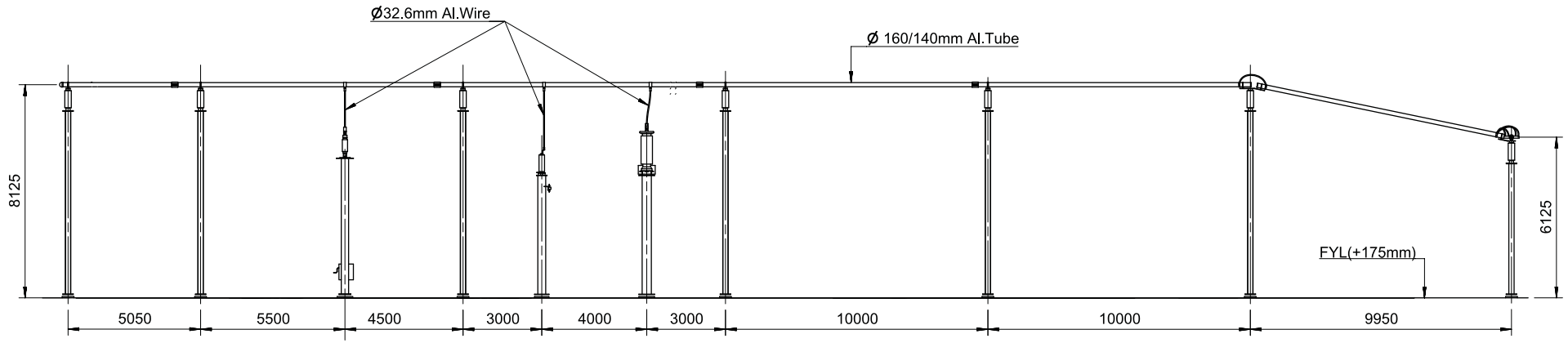

SECTION R-R

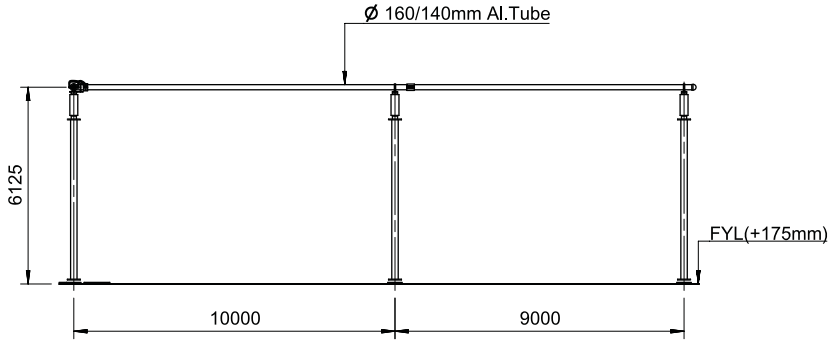

SECTION P-P

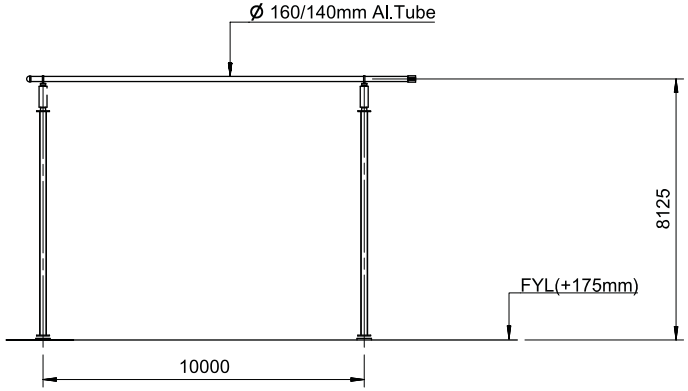

SECTION S-S

We reserve all rights in this document and in the information contained therein. Reproduction, use or disclosure to third parties without express authority is strictly forbidden. © ABB AB, (SE)

This document is issued by means of a computerized system. The digitally stored original is electronically approved. The approved document has a name and date approved in the approved field. A manual signature is not required.

Rev	Revision	Prepared	Approved	Date
01	Revisions made are marked. Also refer last page for revision notes.	Thiruchunapali, Vijaya, Bhaskar	Naik, Ashish	2018-06-26

Contract No: CC-CS/651-SR2/HVDC-3063/7G10/CA-I/5817-5821 dated 2017-01-25

Client:

POWER GRID CORPORATION OF INDIA LIMITED
(A Government of India Enterprise)

पावरग्रिड

BHARAT HEAVY ELECTRICALS LTD.
TRANSMISSION BUSINESS GROUP

Station Name: Pugalur

Classification No.: FJB-64

Based on

Prepared: Thiruchunapali, Vijaya, Bhaskar 2018-01-10

Approved: Naik, Ashish 2018-01-23

Doc. Kind: Layout drawing

Project name: ±800kV, 6000MW HVDC Raigarh-Pugalur Terminals

Title: Pole1 Layout & Sections
DC Yard

Status: Issued

Resp dept: PGGI/DCHUBTPM

Rev ind: 01

Item designation

Language

ABB AB - HVDC

Document number: 1JNL100484-560

Sheet/of: 9 / 13

(A2)

ANNEXURE-J (POLE-1)

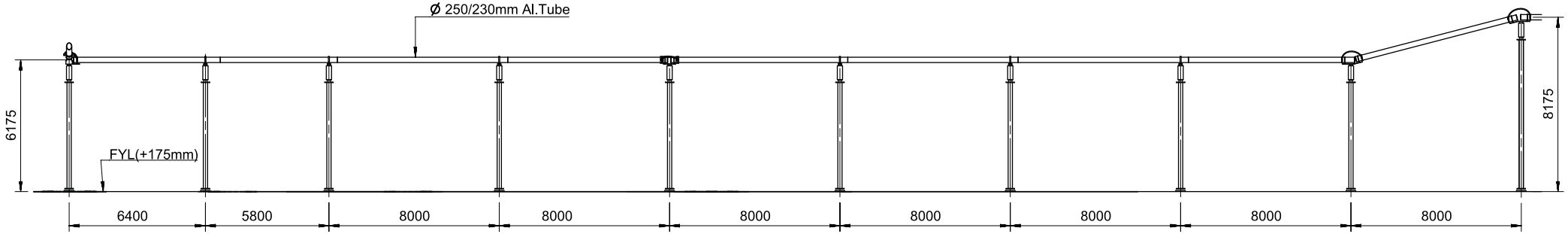

SECTION U-U

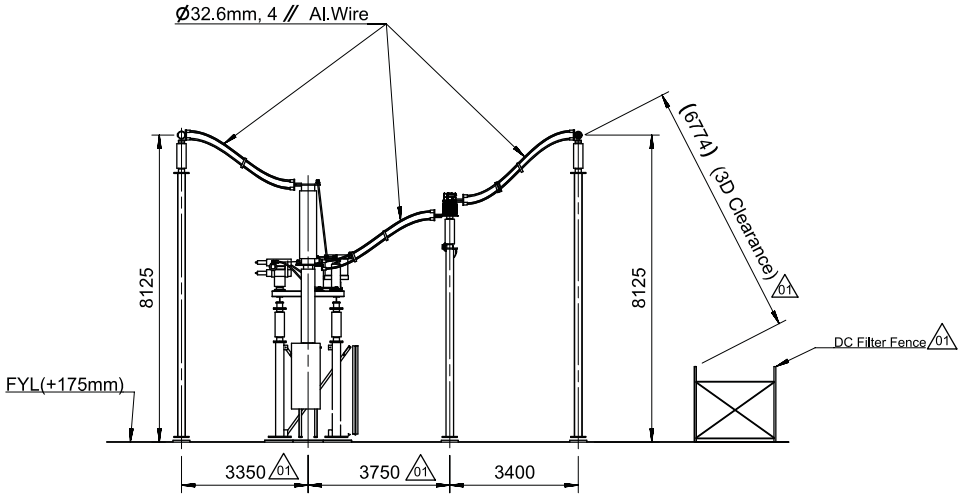

01 SECTION T-T

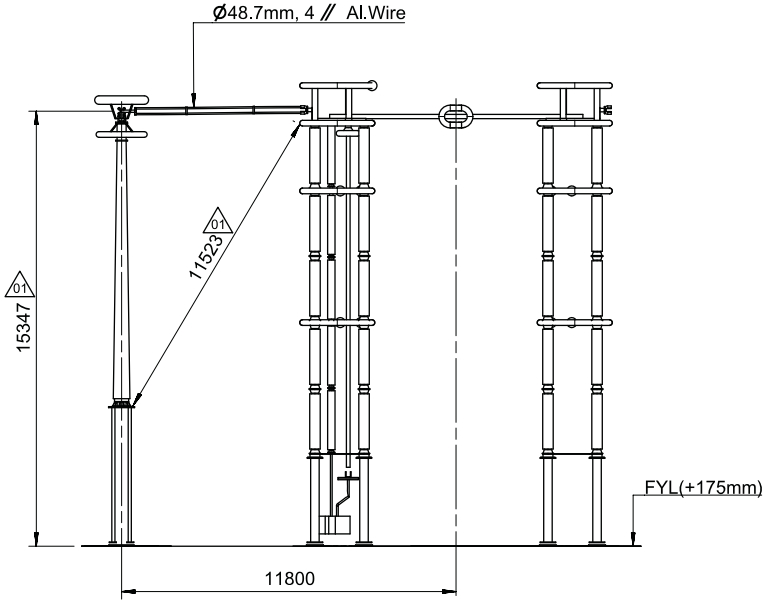

SECTION V-V

Rev	Revision	Prepared	Approved	Date
01	Revisions made are marked. Also refer last page for revision notes.	Thiruchunapali, Vijaya, Bhaskar	Naik, Ashish	2018-06-26

Contract No: CC-CS/651-SR2/HVDC-3063/7G10/CA-I/5817-5821 dated 2017-01-25

Client:

POWER GRID CORPORATION OF INDIA LIMITED
(A Government of India Enterprise)

पावरग्रिड

BHARAT HEAVY ELECTRICALS LTD. TRANSMISSION BUSINESS GROUP

Station Name: Pugalur

Classification No.: FJB-64

Based on

Prepared: Thiruchunapali, Vijaya, Bhaskar 2018-01-10

Approved: Naik, Ashish 2018-01-23

Doc. Kind: Layout drawing

Project name: ±800kV, 6000MW HVDC Raigarh-Pugalur Terminals

Title: Pole1 Layout & Sections Dc Yard

Status: Issued

Resp dept: PGGI/DCHUBTPM

Rev ind: 01

Item designation

Language

ABB AB - HVDC

Document number: 1JNL100484-560

Sheet/of: 10 / 13

(A2)

We reserve all rights in this document and in the information contained therein. Reproduction, use or disclosure to third parties without express authority is strictly prohibited. © ABB AB, (SE)

This document is issued by means of a computerized system. The digitally stored original is electronically approved. The approved document has a name and a date instead of a handwritten signature. A manual signature is not required.

ANNEXURE-J (POLE-1)

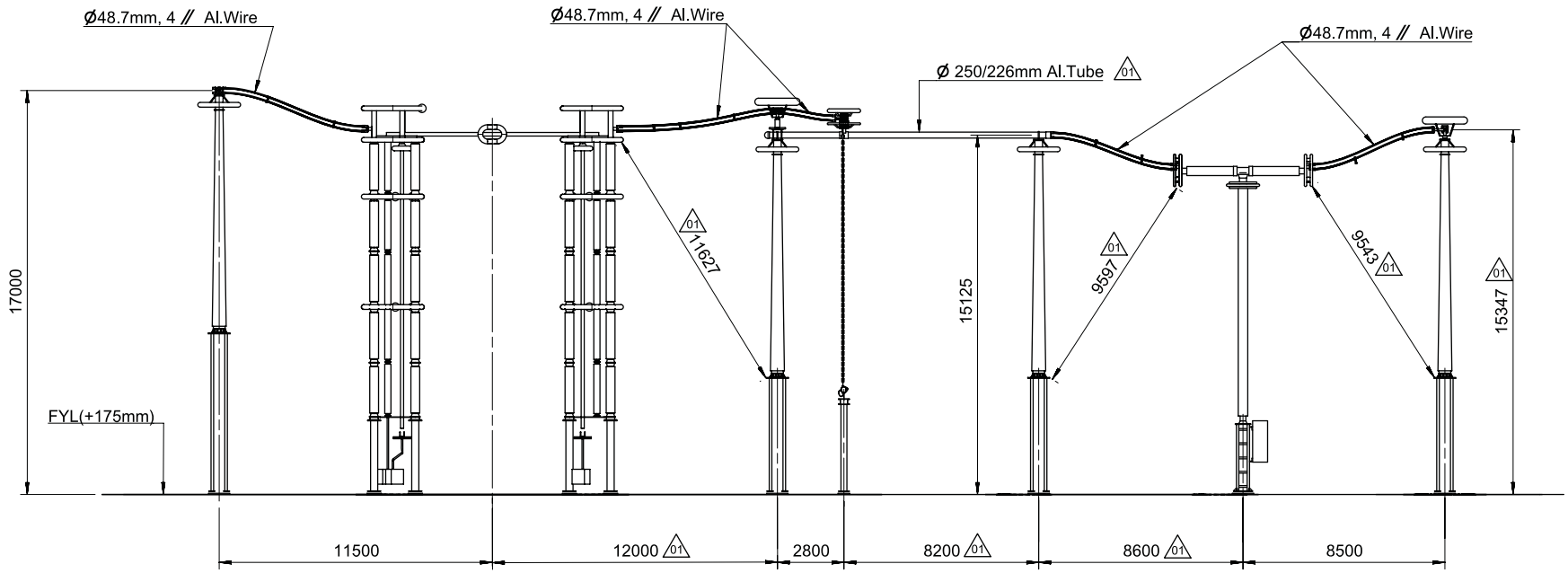

SECTION W-W

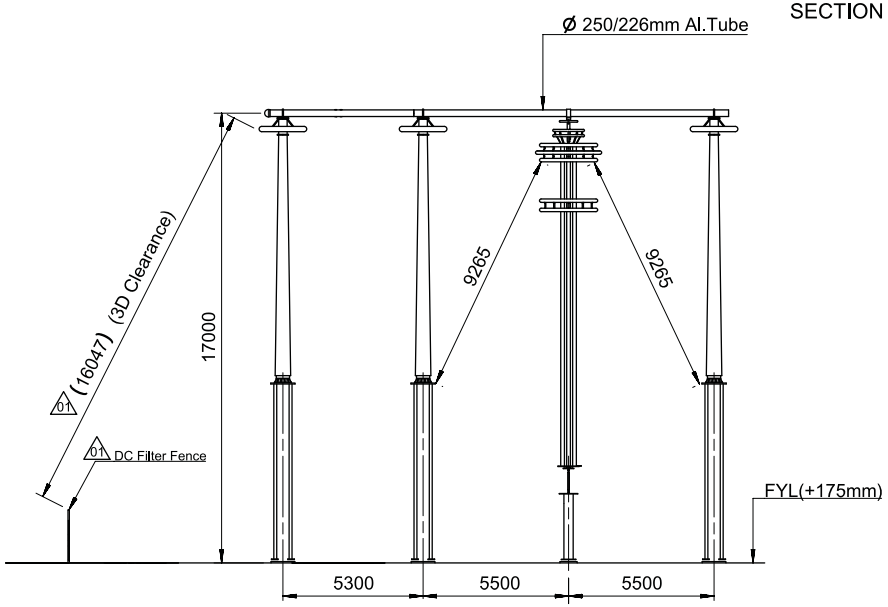

01 SECTION X-X

Rev	Revision	Prepared	Approved	Date
01	Revisions made are marked. Also refer last page for revision notes.	Thiruchunapali, Vijaya, Bhaskar	Naik, Ashish	2018-06-26

Contract No: CC-CS/651-SR2/HVDC-3063/7G10/CA-I/5817-5821 dated 2017-01-25

Client:

POWER GRID CORPORATION OF INDIA LIMITED
(A Government of India Enterprise)

पावरग्रिड

BHARAT HEAVY ELECTRICALS LTD. TRANSMISSION BUSINESS GROUP

Station Name: Pugalur

Classification No.: FJB-64

Based on

Prepared: Thiruchunapali, Vijaya, Bhaskar 2018-01-10

Approved: Naik, Ashish 2018-01-23

Doc. Kind: Layout drawing

Project name: ±800kV, 6000MW HVDC Raigarh-Pugalur Terminals

Title: Pole1 Layout & Sections DC Yard

Status: Issued

Resp dept: PGGI/DCHUBTPM

Rev ind: 01

Item designation

Language

ABB AB - HVDC

Document number: 1JNL100484-560

Sheet of: 11 / 13

(A2)

We reserve all rights in this document and in the information contained therein. Reproduction, use or disclosure to third parties without express authority is strictly forbidden. © ABB AB, 2018

This document is issued by means of a computerized system. The digitally stored original is electronically approved. The approved document has a name and approval date in the upper right corner. A manual signature is not required.

ANNEXURE-J (POLE-1)

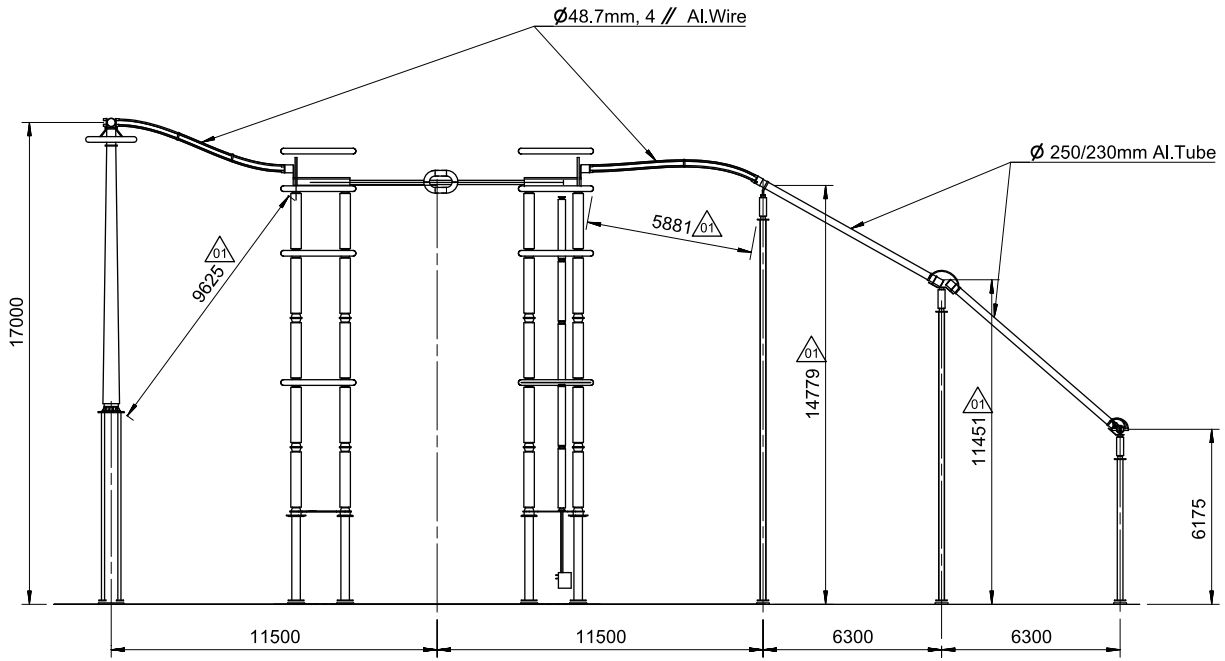

SECTION Y-Y

Rev	Revision	Prepared	Approved	Date
01	Revisions made are marked. Also refer last page for revision notes.	Thiruchunapali, Vijaya, Bhaskar	Naik, Ashish	2018-06-26

Contract No: CC-CS/651-SR2/HVDC-3063/7G10/CA-I/5817-5821 dated 2017-01-25

Client:

POWER GRID CORPORATION OF INDIA LIMITED
(A Government of India Enterprise)

पावरग्रिड

BHARAT HEAVY ELECTRICALS LTD.
TRANSMISSION BUSINESS GROUP

Station Name: Pugalur

Classification No.: FJB-64

Based on

Prepared: Thiruchunapali, Vijaya, Bhaskar 2018-01-10

Approved: Naik, Ashish 2018-01-23

Doc. Kind: Layout drawing

Project name: ±800kV, 6000MW HVDC Raigarh-Pugalur Terminals

Title: Pole1 Layout & Sections DC Yard

Status: Issued

Resp dept: PGGI/DCHUBTPM

Rev ind: 01

Item designation

Language

ABB AB - HVDC

Document number: 1JNL100484-560

Sheet/of: 12 / 13

We reserve all rights in this document and in the information contained therein. Reproduction, use or disclosure to third parties without express authority is strictly prohibited. © ABB AB, (SE)

This document is issued by means of a computerized system. The digitally stored original is electronically approved. The approved document has a name and date approved in the approved field. A manual signature is not required.

(A2)

ANNEXURE-J (POLE-1)

Revision History :

Revision No.	Date	Sheet No.	Revision Note
01	26-06-2018	Sheet 1	Notes updated
		Sheet 2	Dimensions to slope Updated
			Equipment north east coordinate added
			Road size modified
		Sheet 4	Dimensions updated
		Sheet 5	Dimensions updated
		Sheet 6	Tube size updated
			Section D-D view updated to show sectional clearance to DC Filter fence
		Sheet 7	Dimensions updated
			Views updated and sectional clearance to DC Filter fence shown
		Sheet 8	Dimensions updated
		Sheet 10	Dimensions updated
			Section T-T view updated and sectional clearance to DC Filter fence shown
		Sheet 11	Dimensions updated
			Tube size updated
			Section X-X view updated and sectional clearance to DC Filter fence shown
		Sheet 12	Dimensions updated

We reserve all rights in this document and in the information contained therein. Reproduction, use or disclosure to third parties without express authority is strictly forbidden. © ABB AB, 2018

This document is issued by means of a computerized system. The digitally stored original is electronically approved. The approved document has a name and date approved in the computer system. A manual signature is not required.

Rev	Revision	Prepared	Approved	Date
01	Revisions made are marked. Also refer last page for revision notes.	Thiruchunapali, Vijaya, Bhaskar	Naik, Ashish	2018-06-26

Contract No: CC-CS/651-SR2/HVDC-3063/7G10/CA-I/5817-5821 dated 2017-01-25

Client:

POWER GRID CORPORATION OF INDIA LIMITED
(A Government of India Enterprise)

पावरग्रिड

BHARAT HEAVY ELECTRICALS LTD.
TRANSMISSION BUSINESS GROUP

Station Name: Pugalur

Classification No.: FJB-64

Based on: -

Prepared: Thiruchunapali, Vijaya, Bhaskar 2018-01-10

Approved: Naik, Ashish 2018-01-23

Doc. Kind: Layout drawing

Project name: ±800kV, 6000MW HVDC Raigarh-Pugalur Terminals

Title: Pole1 Layout & Sections
Layout and Sections

Status: Issued

Item designation: -

Resp dept: PGGI/DCHUBTPM

Rev ind: 01

Language: -

ABB AB - HVDC

Document number: 1JNL100484-560

Sheet/of: 13 / 13

(A2)

ANNEXURE-J (POLE-2)

Key Plan

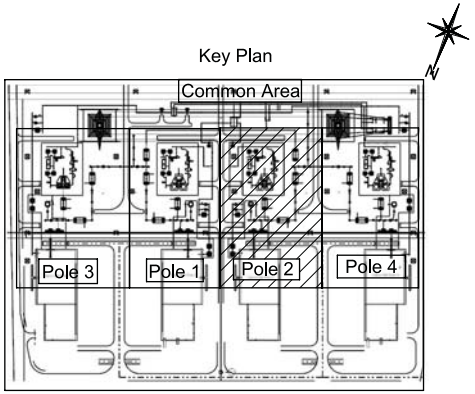

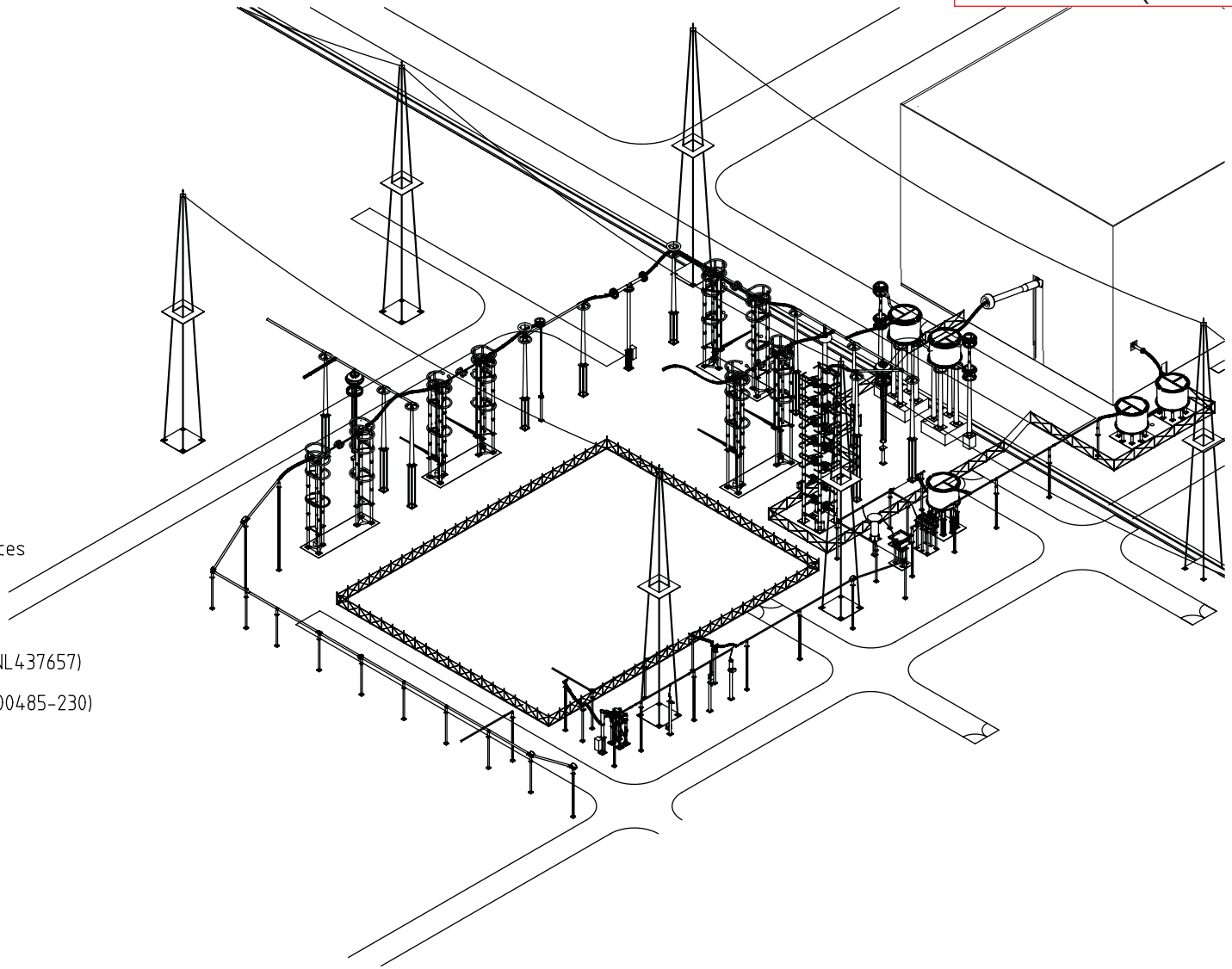

Reference Documents:

1. Requirement on the size of shielding and air Clearances for Valvehall and DC Yard (Doc No. 1JNL449408)

2. Insulation Coordination (Doc No. 1JNL434222)

3. Main Circuit Single Line Diagram, Pugalur (Doc No. 1JNL437657)

4. DC Yard Layout and section Overview (Doc No. 1JNL100485-230)

Notes: 01

1. All Dimensions are in mm unless otherwise specified.
2. Conductor Data

Pole Bus:
- Ø 250/226 mm Al.Tube
- Ø 48.7mm, AAC

Neutral Bus:
- Ø 250/230 mm Al.Tube
- Ø 160/140mm Al.Tube
- Ø 32.6mm, AAC

Damping wires:
- Ø 48.7mm, AAC for Ø 250/226 & Ø 250/230 mm Al.Tube (Length of the damping wire shall be = 2/3 of length of the busbar tube.)
- Ø 29mm, AAC for Ø 160/140mm Al.Tube (Length of the damping wire shall be = 2/3 of length of the busbar tube.)

3. Refer OGA drawing for slope details 1JNL100336-120 sheet.2

Rev	Revision	Prepared	Approved	Date
01	Revisions made are marked. Also refer last page for revision notes.	Thiruchunapali, Vijaya, Bhaskar	Naik, Ashish	2018-06-26

Contract No: CC-CS/651-SR2/HVDC-3063/7G10/CA-I/5817-5821 dated 2017-01-25

Client: POWER GRID CORPORATION OF INDIA LIMITED (A Government of India Enterprise)

BHARAT HEAVY ELECTRICALS LTD. TRANSMISSION BUSINESS GROUP

Station Name: Pugalur

Classification No.: FJB-64

Based on

Prepared: Thiruchunapali, Vijaya, Bhaskar 2018-01-10

Approved: Naik, Ashish 2018-01-23

Doc. Kind: Layout drawing

Project name: ±800kV, 6000MW HVDC Raigarh-Pugalur Terminals

Title: Pole2 Layout & Sections DC Yard

Status: Issued

Resp dept: PGGI/DCHUBTPM

Rev ind: 01

Item designation

Language

ABB AB - HVDC

Document number: 1JNL100484-564

Sheet/of: 1 / 13

(A2)

We reserve all rights in this document and in the information contained therein. Reproduction, use or disclosure to third parties without express authority is strictly forbidden. © ABB AB, 2018

This document is issued by means of a computerized system. The digitally stored original is electronically approved. The approved document has a name and a date instead of a signature. A manual signature is not required.

ANNEXURE-J (POLE-2)

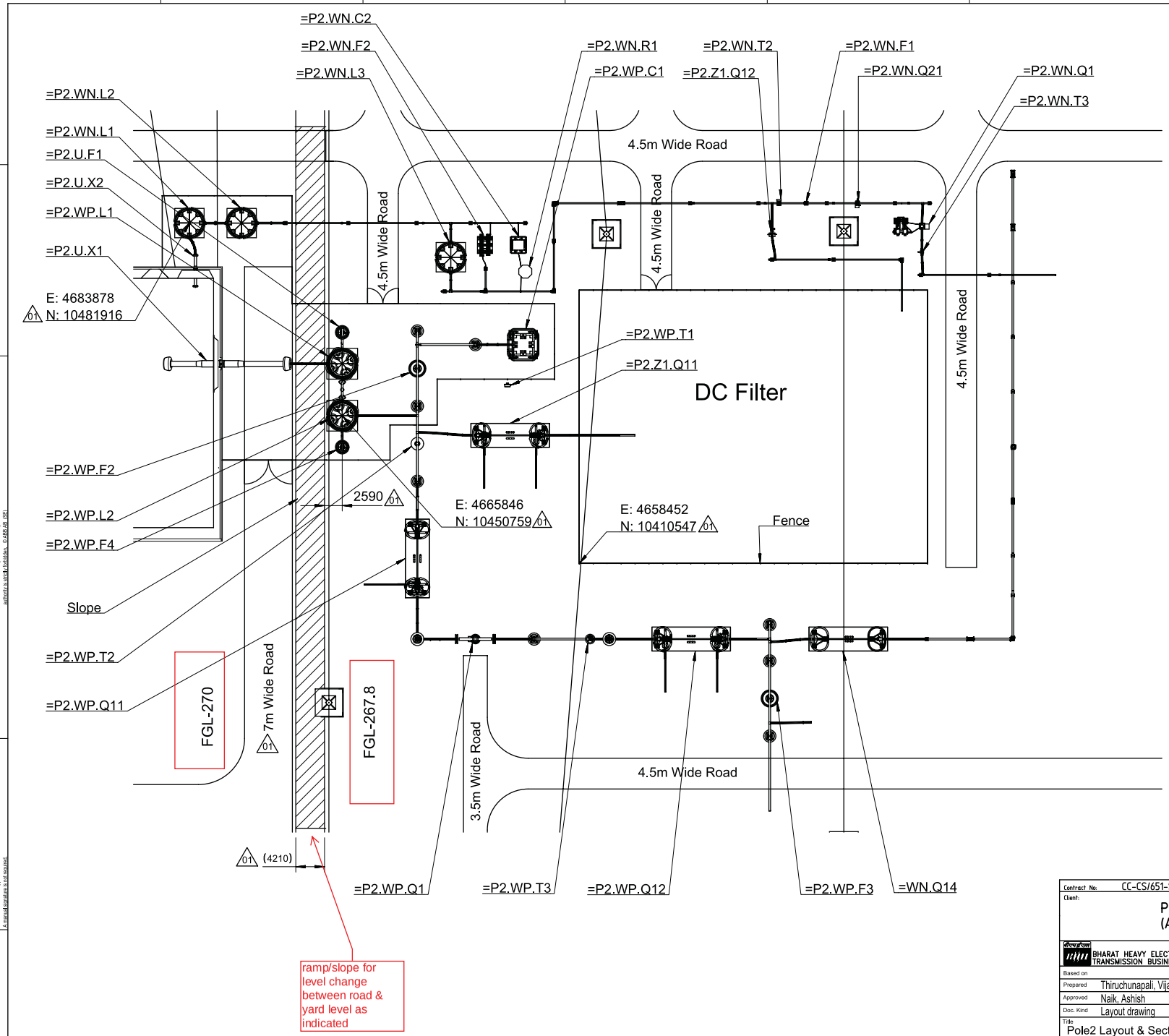

Rev	Revision	Prepared	Approved	Date
01	Revisions made are marked. Also refer last page for revision notes.	Thiruchunapali, Vijaya, Bhaskar	Naik, Ashish	2018-06-26

Contract No: CC-CS/651-SR2/HVDC-3063/7G10/CA-I/5817-5821 dated 2017-01-25

Client: POWER GRID CORPORATION OF INDIA LIMITED (A Government of India Enterprise)

BHARAT HEAVY ELECTRICALS LTD. TRANSMISSION BUSINESS GROUP

Station Name: Pugalur

Classification No.: FJB-64

Based on

Prepared: Thiruchunapali, Vijaya, Bhaskar 2018-01-10

Approved: Naik, Ashish 2018-01-23

Doc. Kind: Layout drawing

Project name: ±800kV, 6000MW HVDC Raigarh-Pugalur Terminals

Title: Pole2 Layout & Sections DC Yard

Status: Issued

Resp dept: PGGI/DCHUBTPM

Rev ind: 01

Item designation

Language

ABB AB - HVDC

Document number: 1JNL100484-564

Sheet 2 / 13

We reserve all rights in this document and in the information contained therein. Reproduction, use or disclosure to third parties without express authority is strictly forbidden. © ABB AB, 2018

This document is issued by means of a computerized system. The digitally stored original is electronically approved. The approved document has a name and date-stamp in the upper right corner. A manual signature is not required.

(A2)

ANNEXURE-J (POLE-2)

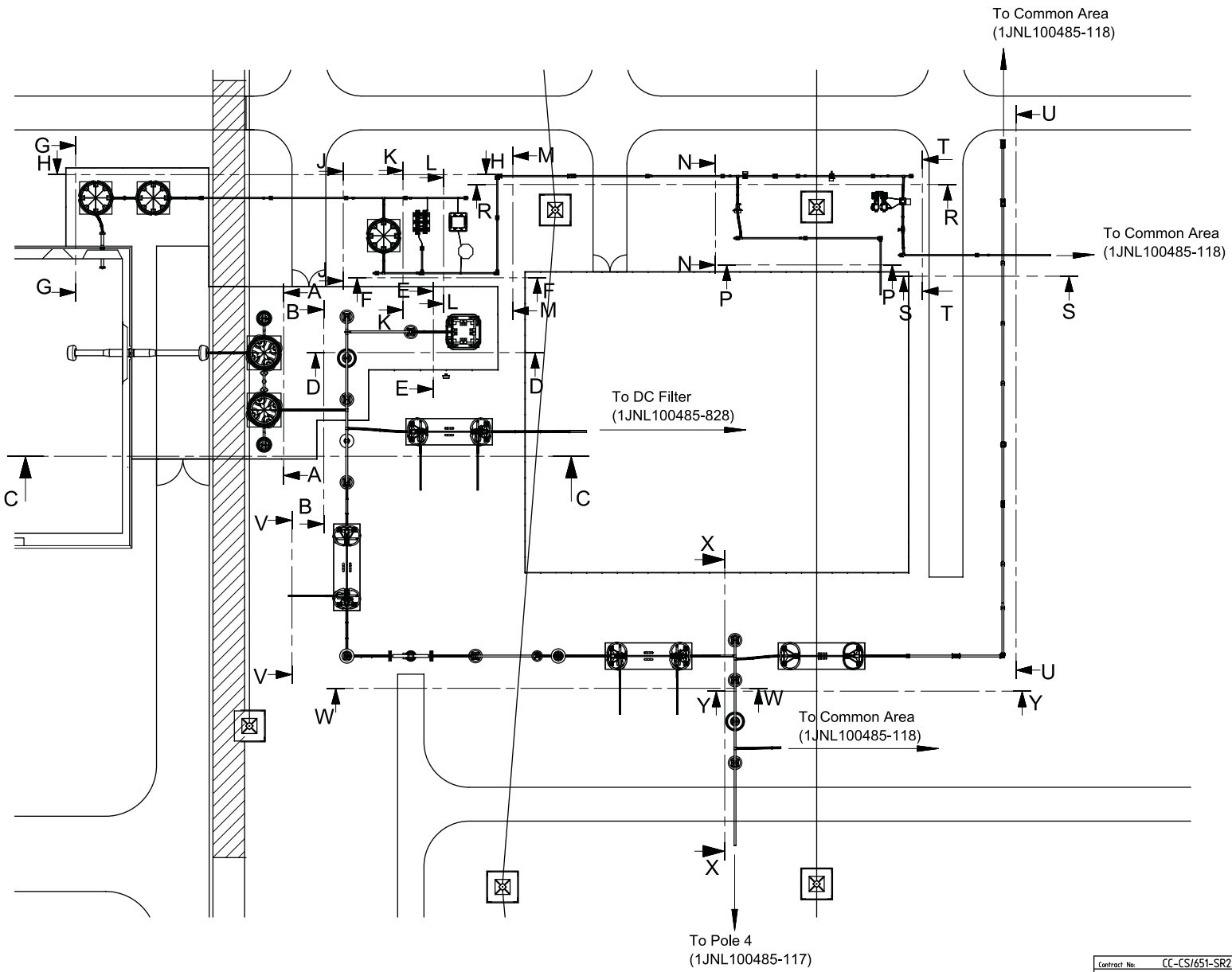

Note:
Section A-A See Sheet 04
Section B-B See Sheet 04

Section C-C See Sheet 05

Section D-D See Sheet 06
Section E-E See Sheet 06

Section F-F See Sheet 07
Section G-G See Sheet 07
Section H-H See Sheet 07

Section J-J See Sheet 08
Section K-K See Sheet 08
Section L-L See Sheet 08
Section M-M See Sheet 08
Section N-N See Sheet 08

Section P-P See Sheet 09
Section R-R See Sheet 09
Section S-S See Sheet 09

Section T-T See Sheet 10
Section U-U See Sheet 10
Section V-V See Sheet 10

Section W-W See Sheet 11
Section X-X See Sheet 11

Section Y-Y See Sheet 12

We reserve all rights in this document and in the information contained therein. Reproduction, use or disclosure to third parties without express authority is strictly forbidden. © ABB AB, 2018

This document is issued by means of a computerized system. The digitally stored original is electronically approved. The approved document has a name and date-stamp in the approval field. A manual signature is not required.

Rev	Revision	Prepared	Approved	Date
01	Revisions made are marked. Also refer last page for revision notes.	Thiruchunapali, Vijaya, Bhaskar	Naik, Ashish	2018-06-26

Contract No: CC-CS/651-SR2/HVDC-3063/7G10/CA-I/5817-5821 dated 2017-01-25

Client:
POWER GRID CORPORATION OF INDIA LIMITED
(A Government of India Enterprise)

BHARAT HEAVY ELECTRICALS LTD. TRANSMISSION BUSINESS GROUP

Station Name: Pugalur

Classification No.

Based on

Prepared: Thiruchunapali, Vijaya, Bhaskar 2018-01-10

Approved: Naik, Ashish 2018-01-23

Doc. Kind: Layout drawing

Project name: ±800kV, 6000MW HVDC Raigarh-Pugalur Terminals

Title: Pole2 Layout & Sections
Layout And Sections

Status: Issued

Resp dept: PGGI/DCHUBTPM

Rev ind: 01

Item designation

Language

ABB AB - HVDC

Document number: 1JNL100484-564

Sheet/of: 3 / 13

(A2)

ANNEXURE-J (POLE-2)

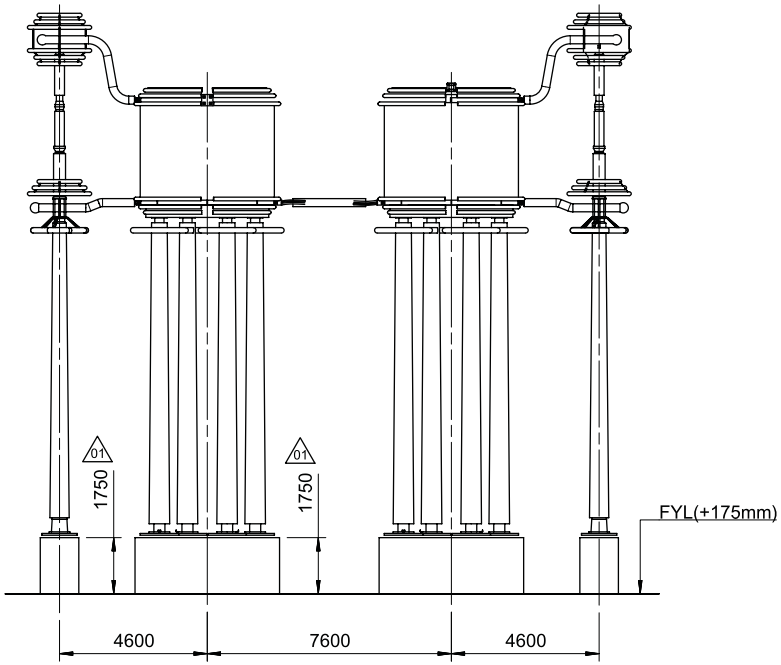

01 SECTION A-A

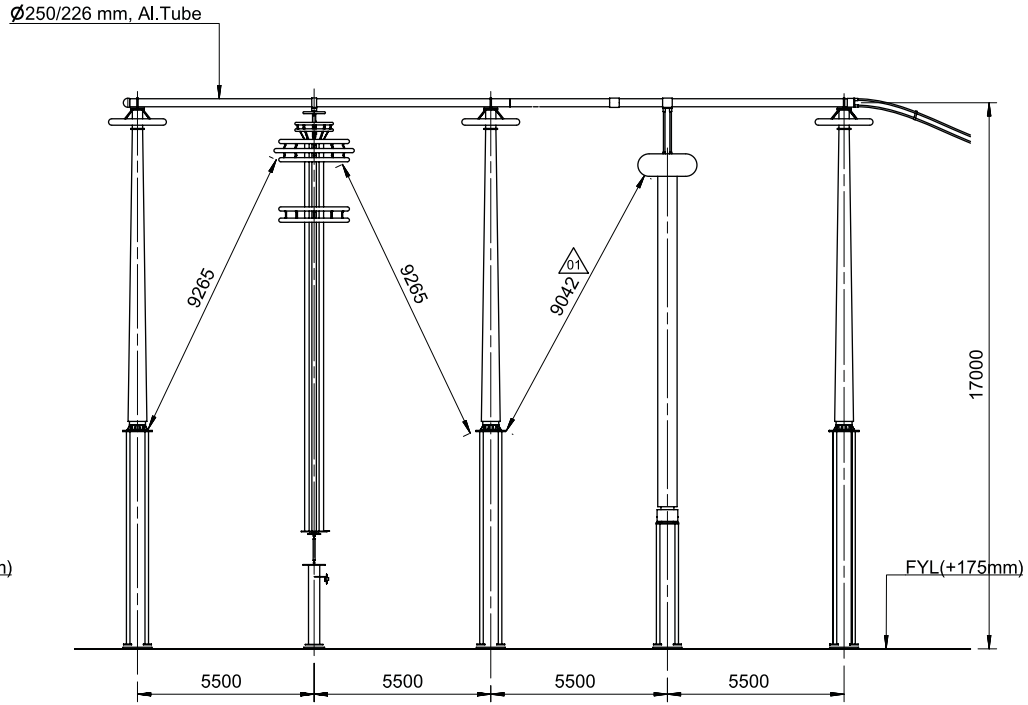

SECTION B-B

We reserve all rights in this document and in the information contained therein. Reproduction, use or disclosure to third parties without express authority is strictly forbidden. © ABB AB, (SE)

This document is issued by means of a computerized system. The digitally stored original is electronically approved. The approved document has a name and date instead of a handwritten signature. A manual signature is not required.

Rev	Revision	Prepared	Approved	Date
01	Revisions made are marked. Also refer last page for revision notes.	Thiruchunapali, Vijaya, Bhaskar	Naik, Ashish	2018-06-26

Contract No: CC-CS/651-SR2/HVDC-3063/7G10/CA-I/5817-5821 dated 2017-01-25

Client:

POWER GRID CORPORATION OF INDIA LIMITED
(A Government of India Enterprise)

पावरग्रिड

BHARAT HEAVY ELECTRICALS LTD.
TRANSMISSION BUSINESS GROUP

Station Name: Pugalur

Classification No.: FJB-64

Based on

Prepared: Thiruchunapali, Vijaya, Bhaskar 2018-01-10

Approved: Naik, Ashish 2018-01-23

Doc. Kind: Layout drawing

Project name: ±800kV, 6000MW HVDC Raigarh-Pugalur Terminals

Title: Pole2 Layout & Sections DC Yard

Status: Issued

Resp dept: PGGI/DCHUBTPM

Rev ind: 01

Item designation

Language

ABB AB - HVDC

Document number: 1JNL100484-564

Sheet/of: 4 / 13

(A2)

ANNEXURE-J (POLE-2)

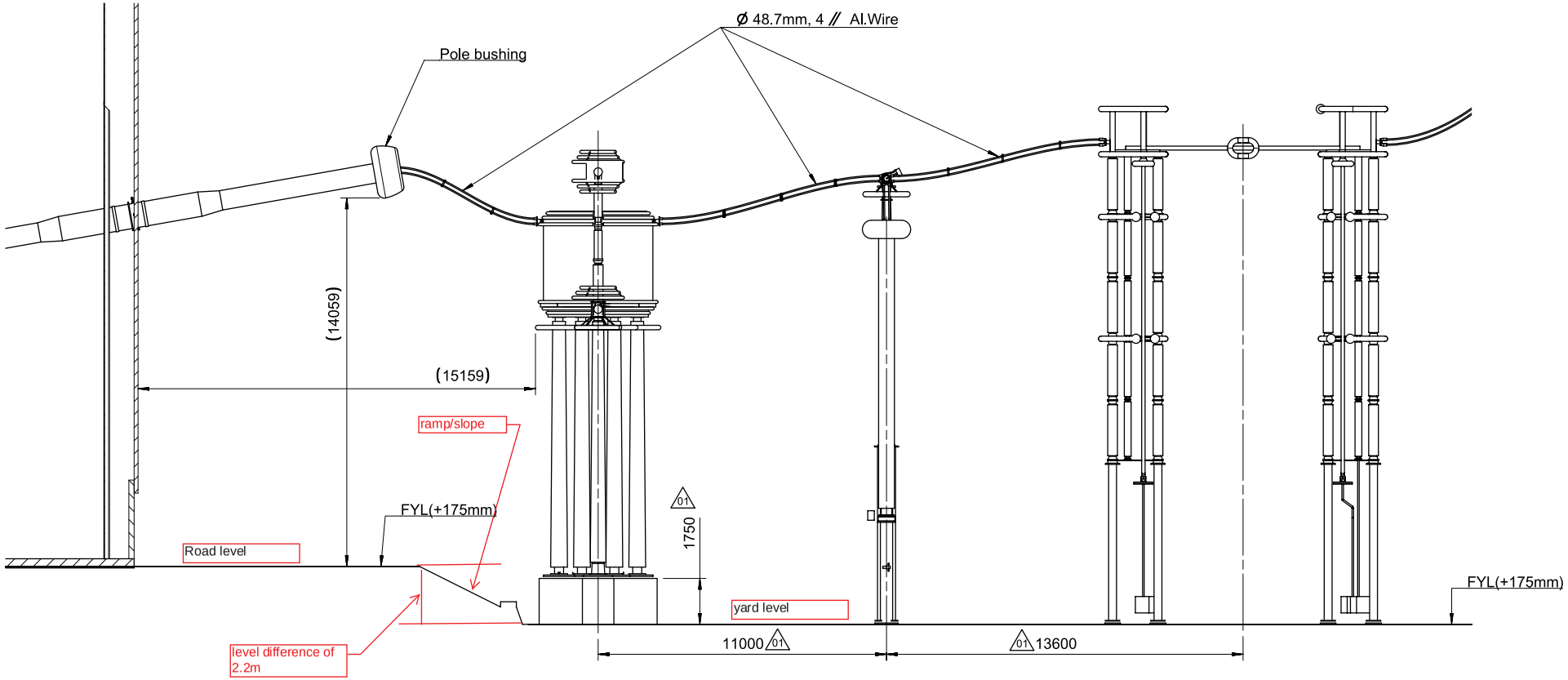

SECTION C-C 01

Rev	Revision	Prepared	Approved	Date
01	Revisions made are marked. Also refer last page for revision notes.	Thiruchunapali, Vijaya, Bhaskar	Naik, Ashish	2018-06-26

Contract No: CC-CS/651-SR2/HVDC-3063/7G10/CA-I/5817-5821 dated 2017-01-25

Client: POWER GRID CORPORATION OF INDIA LIMITED (A Government of India Enterprise)

BHARAT HEAVY ELECTRICALS LTD. TRANSMISSION BUSINESS GROUP

Station Name: Pugalur

Classification No.: FJB-64

Based on

Prepared: Thiruchunapali, Vijaya, Bhaskar 2018-01-10

Approved: Naik, Ashish 2018-01-23

Doc. Kind: Layout drawing

Project name: ±800kV, 6000MW HVDC Raigarh-Pugalur Terminals

Title: Pole2 Layout & Sections DC Yard

Status: Issued

Resp dept: PGGI/DCHUBTPM

Rev ind: 01

Item designation

Language

ABB AB - HVDC

Document number: 1JNL100484-564

Sheet 5 of 13

We reserve all rights in this document and in the information contained therein. Reproduction, use or disclosure to third parties without express authority is strictly forbidden. © ABB AB, (SE)

This document is issued by means of a computerized system. The digitally stored original is electronically approved. The approved document has a name and date approved in the computer system. A manual signature is not required.

(A2)

ANNEXURE-J (POLE-2)

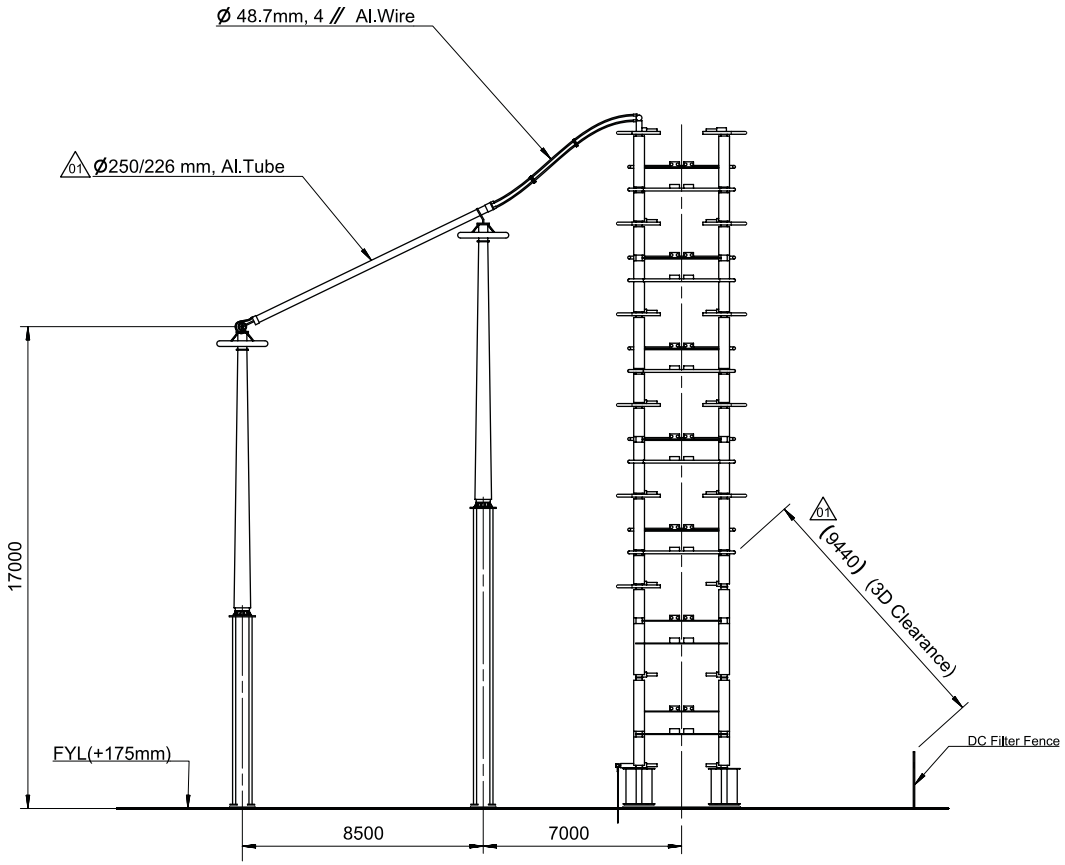

01 SECTION D-D

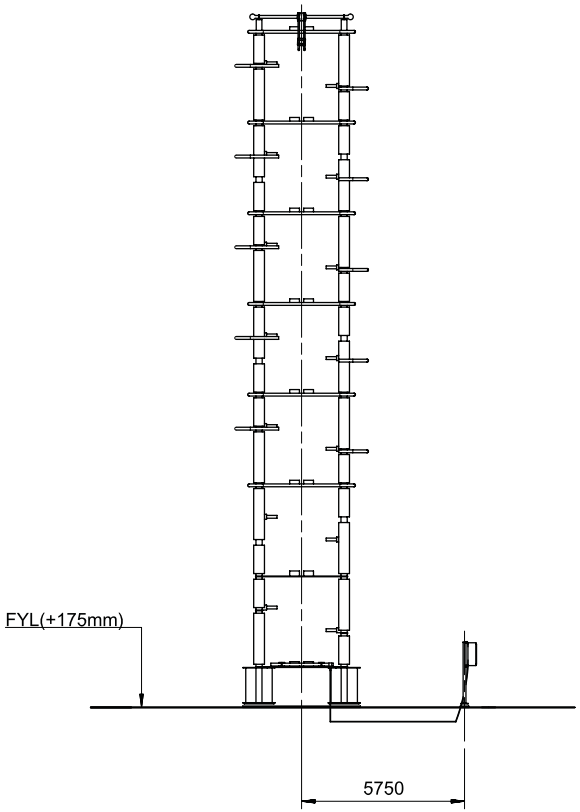

SECTION E-E

Rev	Revision	Prepared	Approved	Date
01	Revisions made are marked. Also refer last page for revision notes.	Thiruchunapali, Vijaya, Bhaskar	Naik, Ashish	2018-06-26

Contract No: CC-CS/651-SR2/HVDC-3063/7G10/CA-I/5817-5821 dated 2017-01-25

Client: POWER GRID CORPORATION OF INDIA LIMITED (A Government of India Enterprise)

BHARAT HEAVY ELECTRICALS LTD. TRANSMISSION BUSINESS GROUP

Station Name: Pugalur

Classification No.: FJB-64

Based on

Prepared: Thiruchunapali, Vijaya, Bhaskar 2018-01-10

Approved: Naik, Ashish 2018-01-23

Doc. Kind: Layout drawing

Project name: ±800kV, 6000MW HVDC Raigarh-Pugalur Terminals

Title: Pole2 Layout & Sections DC Yard

Status: Issued

Resp dept: PGGI/DCHUBTPM

Rev ind: 01

Item designation

Language

ABB AB - HVDC

Document number: 1JNL100484-564

Sheet/of 6 / 13

We reserve all rights in this document and in the information contained therein. Reproduction, use or disclosure to third parties without express authority is strictly forbidden. © ABB AB, (SE)

This document is issued by means of a computerized system. The digitally stored original is electronically approved. The approved document has a name and date-stamp in the upper right corner. A manual signature is not required.

(A2)

ANNEXURE-J (POLE-2)

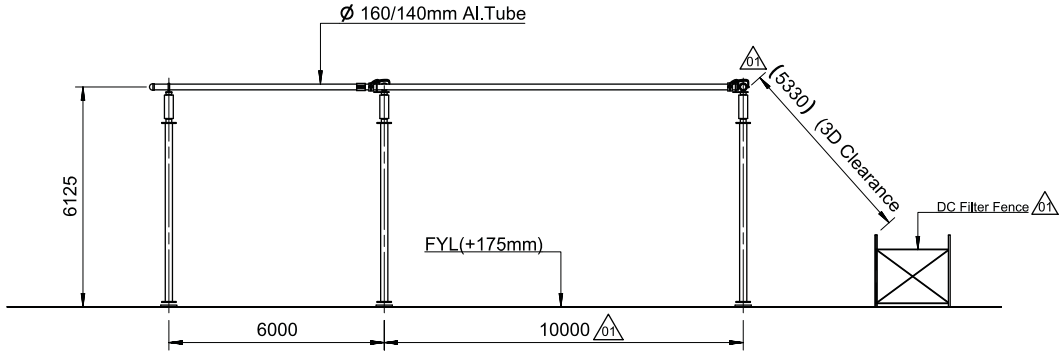

SECTION F-F

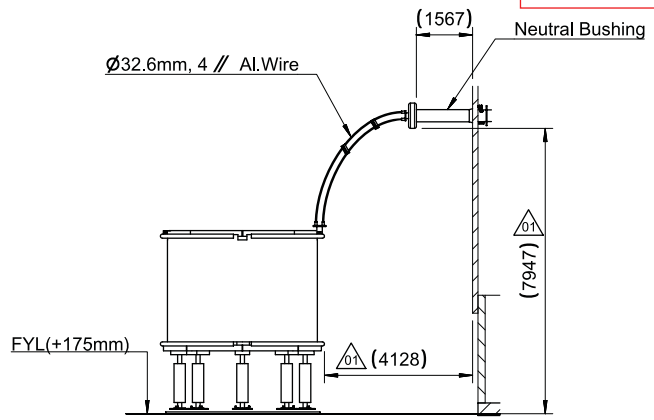

SECTION G-G

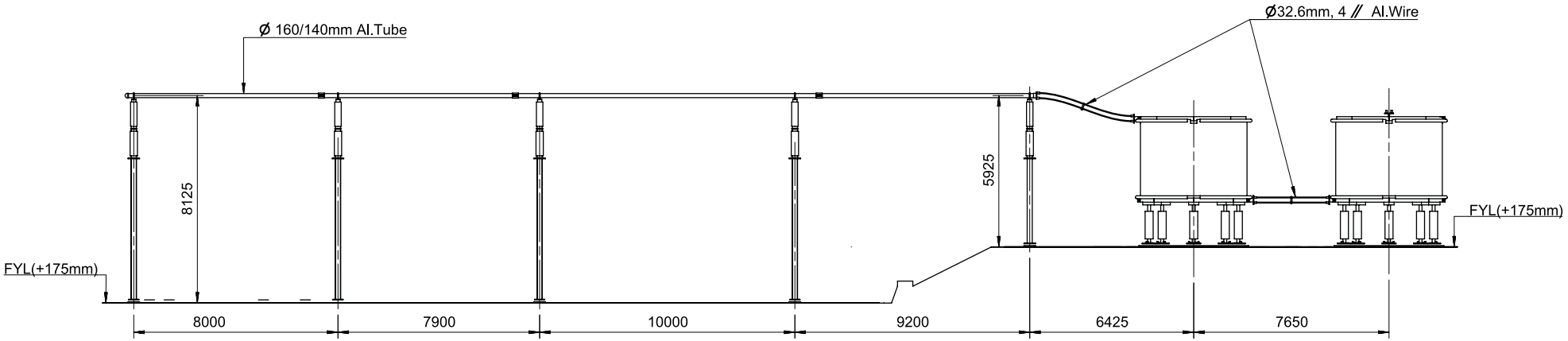

SECTION H-H 01

Rev	Revision	Prepared	Approved	Date
01	Revisions made are marked. Also refer last page for revision notes.	Thiruchunapali, Vijaya, Bhaskar	Naik, Ashish	2018-06-26

Contract No: CC-CS/651-SR2/HVDC-3063/7G10/CA-I/5817-5821 dated 2017-01-25

Client: POWER GRID CORPORATION OF INDIA LIMITED (A Government of India Enterprise)

BHARAT HEAVY ELECTRICALS LTD. TRANSMISSION BUSINESS GROUP

Station Name: Pugalur

Classification No.: FJB-64

Based on: -

Prepared: Thiruchunapali, Vijaya, Bhaskar 2018-01-10

Approved: Naik, Ashish 2018-01-23

Doc. Kind: Layout drawing

Project name: ±800kV, 6000MW HVDC Raigarh-Pugalur Terminals

Title: Pole2 Layout & Sections DC Yard

Status: Issued

Resp dept: PGGI/DCHUBTPM

Rev ind: 01

Item designation:

Language:

ABB AB - HVDC

Document number: 1JNL100484-564

Sheet/of: 7 / 13

We reserve all rights in this document and in the information contained therein. Reproduction, use or disclosure to third parties without express authority is strictly prohibited. © ABB AB, (SE)

This document is issued by means of a computerized system. The digitally stored original is electronically approved. The approved document has a name and date-stamp in the upper right corner. A manual signature is not required.

(A2)

ANNEXURE-J (POLE-2)

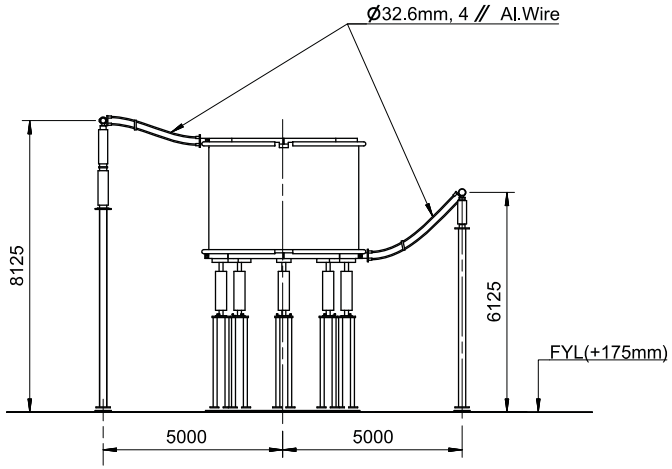

SECTION J-J

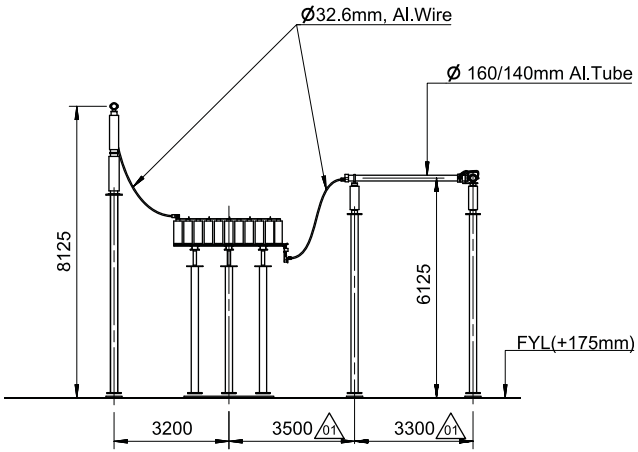

SECTION K-K

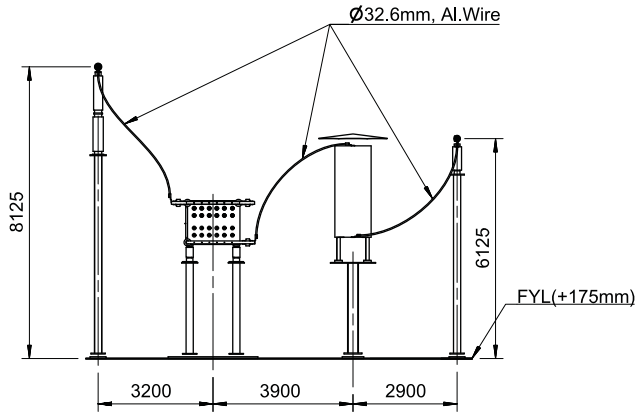

SECTION L-L

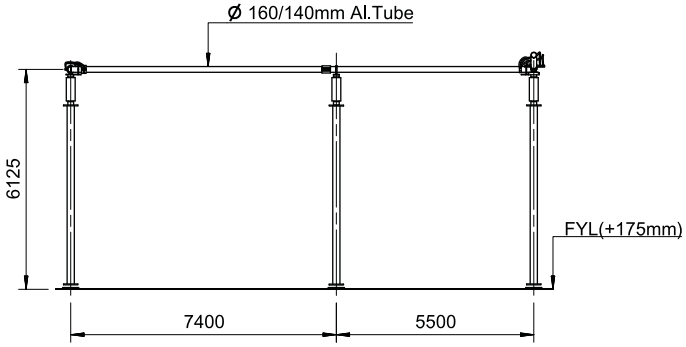

SECTION M-M

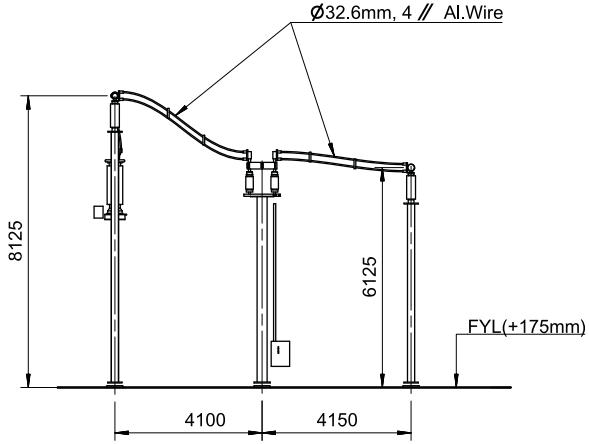

SECTION N-N

We reserve all rights in this document and in the information contained therein. Reproduction, use or disclosure to third parties without express authority is strictly forbidden. © ABB AB, (SE)

This document is issued by means of a computerized system. The digitally stored original is electronically approved. The approved document has a name and date-stamp in the upper right corner. A manual signature is not required.

Rev	Revision	Prepared	Approved	Date
01	Revisions made are marked. Also refer last page for revision notes.	Thiruchunapali, Vijaya, Bhaskar	Naik, Ashish	2018-06-26

Contract No: CC-CS/651-SR2/HVDC-3063/7G10/CA-I/5817-5821 dated 2017-01-25

Client:

POWER GRID CORPORATION OF INDIA LIMITED
(A Government of India Enterprise)

पावरग्रिड

BHARAT HEAVY ELECTRICALS LTD.
TRANSMISSION BUSINESS GROUP

Station Name: Pugalur

Classification No.: FJB-64

Based on

Prepared: Thiruchunapali, Vijaya, Bhaskar 2018-01-10

Approved: Naik, Ashish 2018-01-23

Doc. Kind: Layout drawing

Project name: ±800kV, 6000MW HVDC Raigarh-Pugalur Terminals

Title: Pole2 Layout & Sections
DC Yard

Status: Issued

Resp dept: PGGI/DCHUBTPM

Rev ind: 01

Item designation

Language

ABB AB - HVDC

Document number: 1JNL100484-564

Sheet 8 of 13

(A2)

ANNEXURE-J (POLE-2)

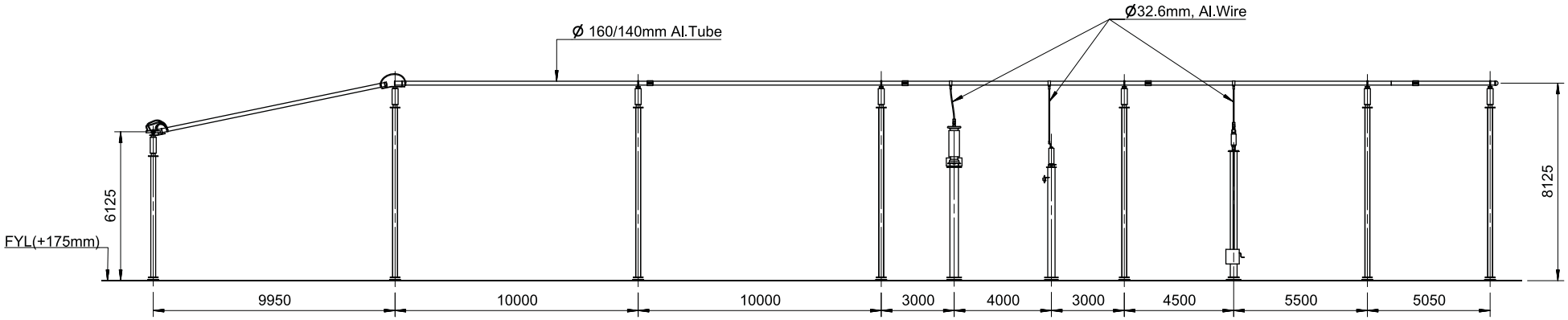

SECTION R-R

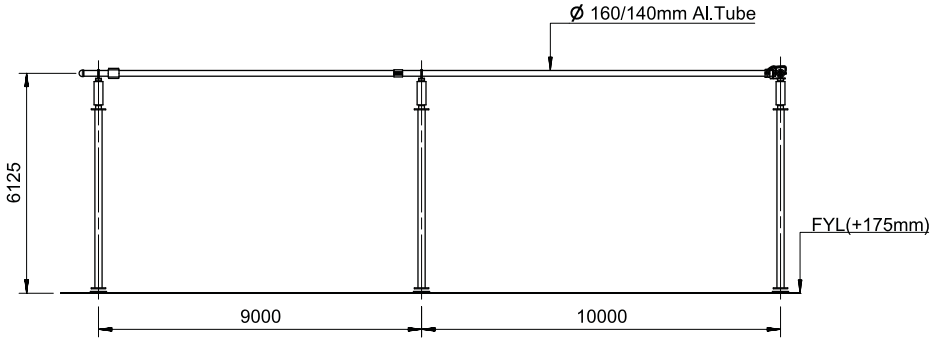

SECTION P-P

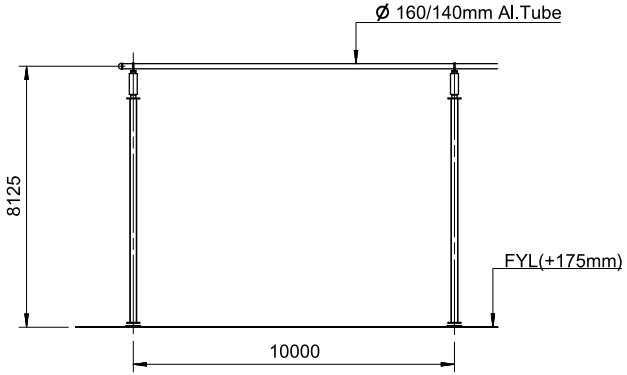

SECTION S-S

We reserve all rights in this document and in the information contained therein. Reproduction, use or disclosure to third parties without express authority is strictly forbidden. © ABB AB, (SE)

This document is issued by means of a computerized system. The digital stored original is electronically approved. The approved document has a name and date stamped in the approval field. A manual signature is not required.

Contract No:	CC-CS/651-SR2/HVDC-3063/7G10/CA-I/5817-5821 dated 2017-01-25		
Client:	POWER GRID CORPORATION OF INDIA LIMITED (A Government of India Enterprise)		
BHARAT HEAVY ELECTRICALS LTD. TRANSMISSION BUSINESS GROUP	Station Name: Pugalur	Classification No.: FJB-64	
Based on		Project name: ±800kV, 6000MW HVDC Raigarh-Pugalur Terminals	
Prepared	Thiruchunapali, Vijaya, Bhaskar 2018-01-10		
Approved	Naik, Ashish 2018-01-23		
Doc. Kind	Layout drawing		
Title: Pole2 Layout & Sections DC Yard	Status: Issued	Item designation	
	Resp dept: PGGI/DCHUBTPM	Rev ind: 01	Language
ABB AB - HVDC	Document number: 1JNL100484-564		Sheet/of: 9 / 13

Rev	Revision	Prepared	Approved	Date
01	Revisions made are marked. Also refer last page for revision notes.	Thiruchunapali, Vijaya, Bhaskar	Naik, Ashish	2018-06-26

(A2)

ANNEXURE-J (POLE-2)

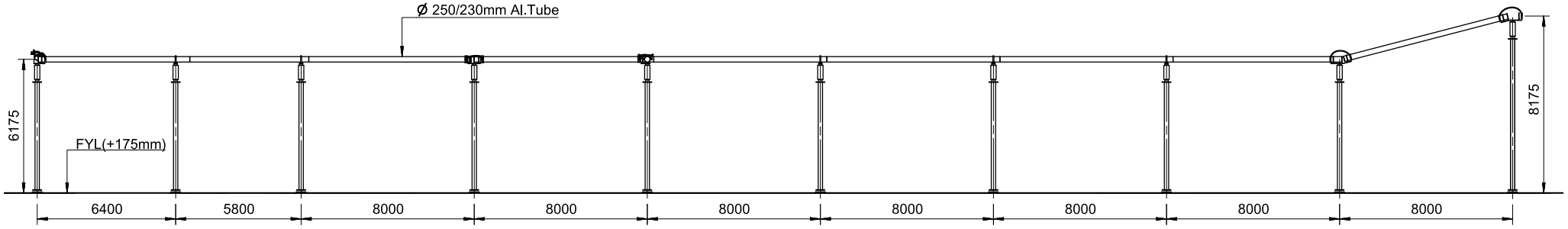

SECTION U-U

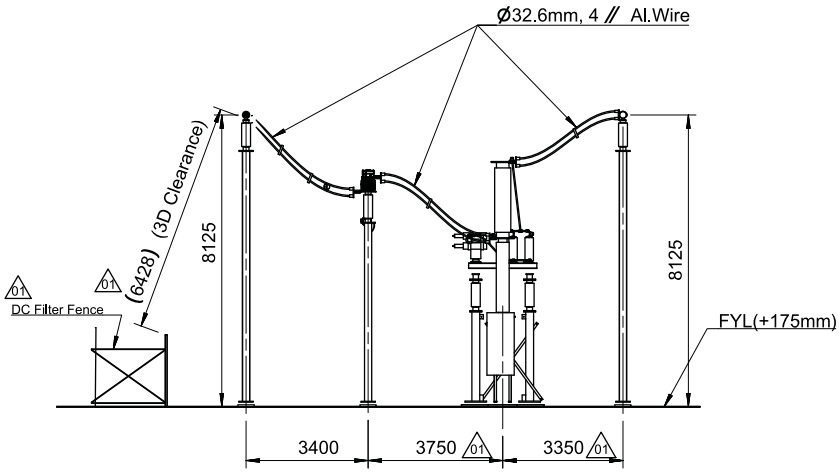

01 SECTION T-T

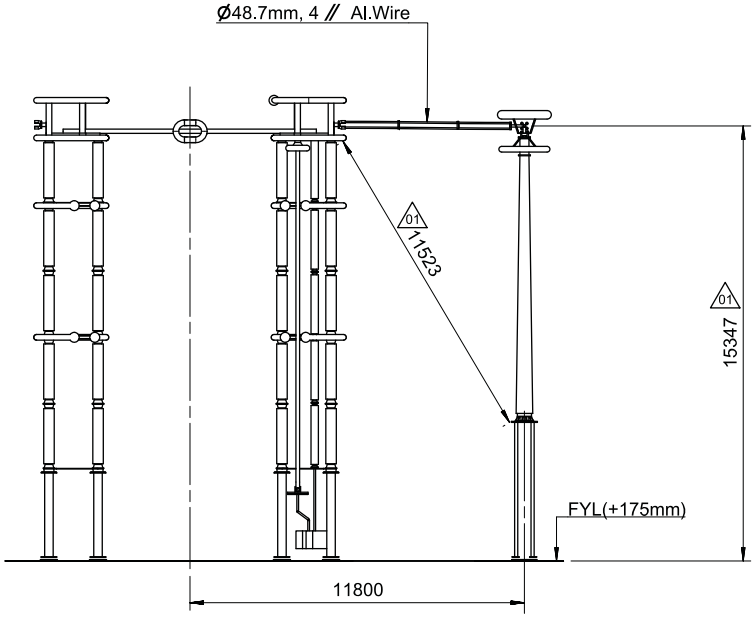

SECTION V-V

Rev	Revision	Prepared	Approved	Date
01	Revisions made are marked. Also refer last page for revision notes.	Thiruchunapali, Vijaya, Bhaskar	Naik, Ashish	2018-06-26

Contract No: CC-CS/651-SR2/HVDC-3063/7G10/CA-I/5817-5821 dated 2017-01-25

Client: POWER GRID CORPORATION OF INDIA LIMITED (A Government of India Enterprise)

BHARAT HEAVY ELECTRICALS LTD. TRANSMISSION BUSINESS GROUP

Station Name: Pugalur

Classification No.: FJB-64

Based on: -

Prepared: Thiruchunapali, Vijaya, Bhaskar 2018-01-10

Approved: Naik, Ashish 2018-01-23

Doc. Kind: Layout drawing

Project name: ±800kV, 6000MW HVDC Raigarh-Pugalur Terminals

Title: Pole2 Layout & Sections DC Yard

Status: Issued

Resp dept: PGGI/DCHUBTPM

Rev ind: 01

Item designation:

Language:

ABB AB - HVDC

Document number: 1JNL100484-564

Sheet/of: 10 / 13

We reserve all rights in this document and in the information contained therein. Reproduction, use or disclosure to third parties without express authority is strictly forbidden. © ABB AB, 2018

This document is issued by means of a computerized system. The digitally stored original is electronically approved. The approved document has a name and approval date in the upper right field. A manual signature is not required.

(A2)

ANNEXURE-J (POLE-2)

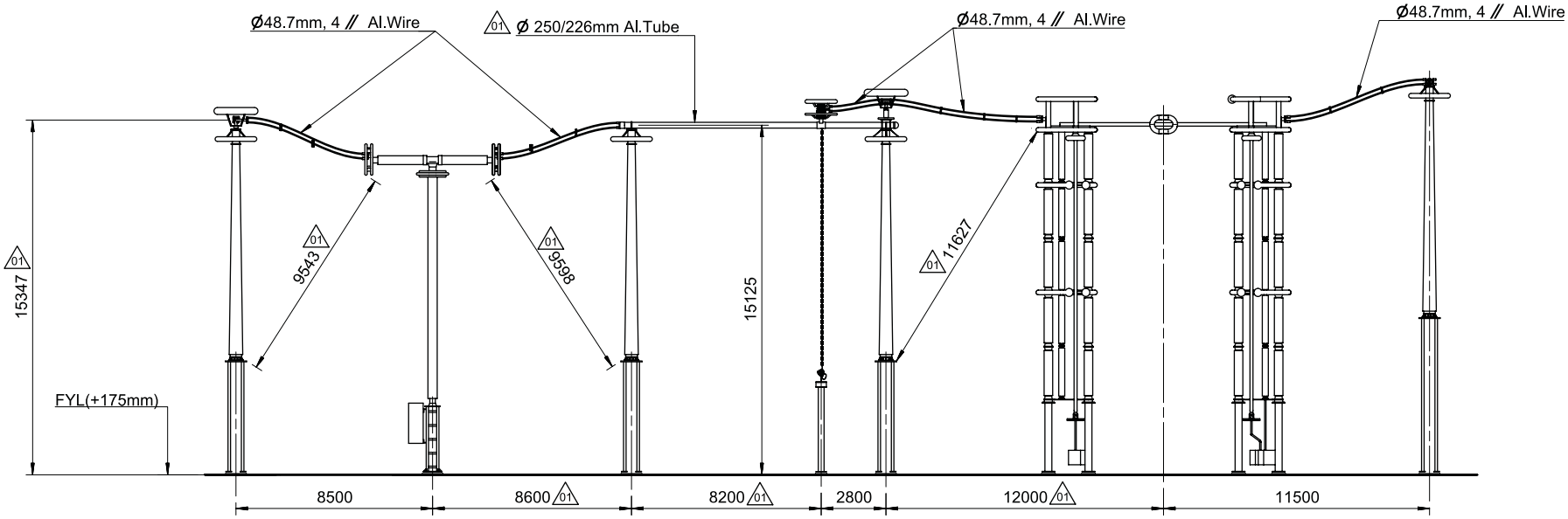

SECTION W-W

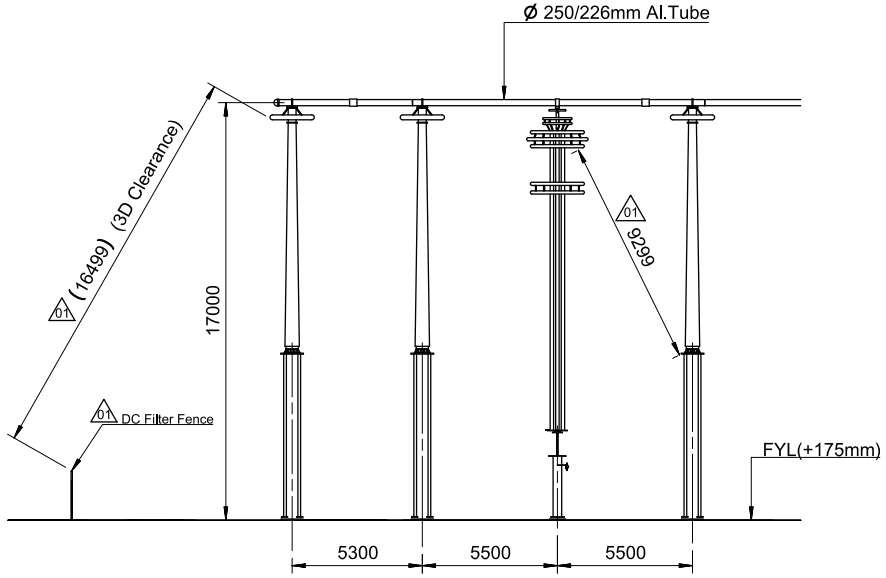

01 SECTION X-X

Rev	Revision	Prepared	Approved	Date
01	Revisions made are marked. Also refer last page for revision notes.	Thiruchunapali, Vijaya, Bhaskar	Naik, Ashish	2018-06-26

Contract No: CC-CS/651-SR2/HVDC-3063/7G10/CA-I/5817-5821 dated 2017-01-25

Client: POWER GRID CORPORATION OF INDIA LIMITED (A Government of India Enterprise)

BHARAT HEAVY ELECTRICALS LTD. TRANSMISSION BUSINESS GROUP

Station Name: Pugalur

Classification No.: FJB-64

Based on

Prepared: Thiruchunapali, Vijaya, Bhaskar 2018-01-10

Approved: Naik, Ashish 2018-01-23

Doc. Kind: Layout drawing

Project name: ±800kV, 6000MW HVDC Raigarh-Pugalur Terminals

Title: Pole2 Layout & Sections DC Yard

Status: Issued

Item designation

Resp dept: PGGI/DCHUBTPM

Rev ind: 01

Language

ABB AB - HVDC

Document number: 1JNL100484-564

Sheet/of: 11 / 13

We reserve all rights in this document and in the information contained therein. Reproduction, use or disclosure to third parties without express authority is strictly prohibited. © ABB AB, (SE)

This document is issued by means of a computerized system. The digitally stored original is electronically approved. The approved document has a name and approval date in the upper right corner. A manual signature is not required.

(A2)

ANNEXURE-J (POLE-2)

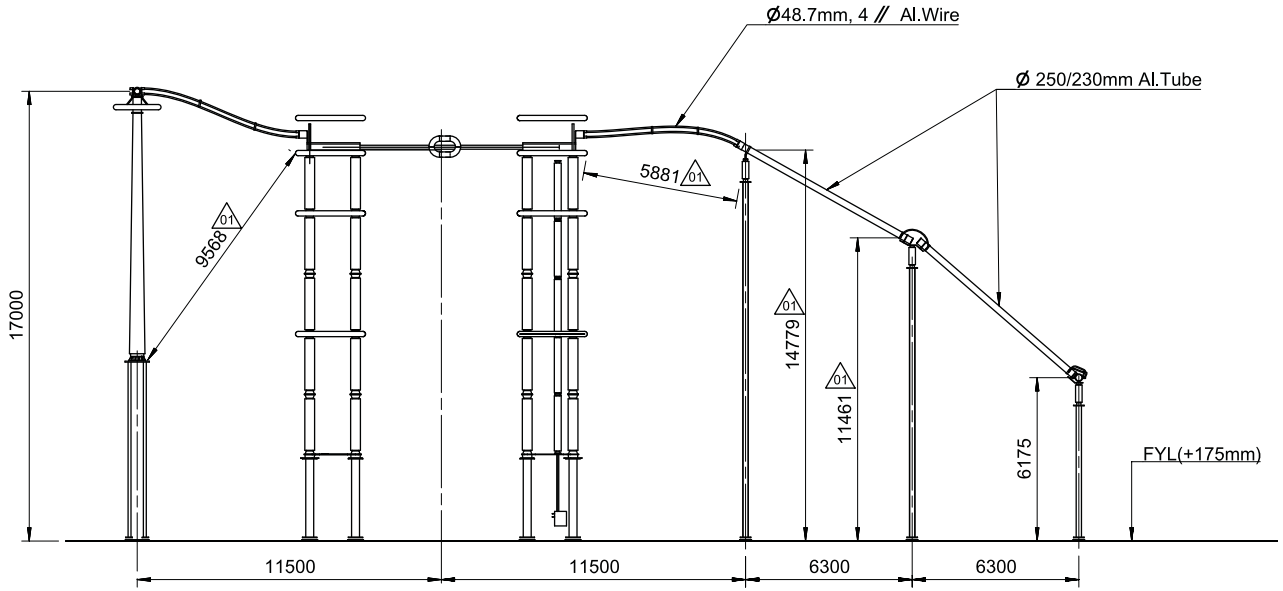

01 SECTION Y-Y

Rev	Revision	Prepared	Approved	Date
01	Revisions made are marked. Also refer last page for revision notes.	Thiruchunapali, Vijaya, Bhaskar	Naik, Ashish	2018-06-26

Contract No: CC-CS/651-SR2/HVDC-3063/7G10/CA-I/5817-5821 dated 2017-01-25

Client: POWER GRID CORPORATION OF INDIA LIMITED (A Government of India Enterprise)

BHARAT HEAVY ELECTRICALS LTD. TRANSMISSION BUSINESS GROUP

Station Name: Pugalur

Classification No.: FJB-64

Based on

Prepared: Thiruchunapali, Vijaya, Bhaskar 2018-01-10

Approved: Naik, Ashish 2018-01-23

Doc. Kind: Layout drawing

Project name: ±800kV, 6000MW HVDC Raigarh-Pugalur Terminals

Title: Pole2 Layout & Sections DC Yard

Status: Issued

Resp dept: PGGI/DCHUBTPM

Rev ind: 01

Item designation

Language

ABB AB - HVDC

Document number: 1JNL100484-564

Sheet/of: 12 / 13

We reserve all rights in this document and in the information contained therein. Reproduction, use or disclosure to third parties without express authority is strictly forbidden. © ABB AB, (SE)

This document is issued by means of a computerized system. The digital stored original is electronically approved. The approved document has a name and approval date in the approval field. A manual signature is not required.

(A2)

ANNEXURE-J (POLE-2)

Revision History :

Revision No.	Date	Sheet No.	Revision Note
01	26-06-2018	Sheet 1	Notes updated
		Sheet 2	Dimensions to slope updated
			Equipment north east coordinate added
			Road size modified
		Sheet 4	Dimensions updated
		Sheet 5	Dimensions updated
		Sheet 6	Tube size updated
			Section D-D view updated to show sectional clearance to DC Filter fence
		Sheet 7	Dimensions updated
			Views updated and sectional clearance to DC Filter fence shown
		Sheet 8	Dimensions updated
		Sheet 10	Dimensions updated
			Section T-T view updated and sectional clearance to DC Filter fence shown
		Sheet 11	Dimensions updated
			Tube size updated
			Section X-X view updated and sectional clearance to DC Filter fence shown
		Sheet 12	Dimensions updated

We reserve all rights in this document and in the information contained therein. Reproduction, use or disclosure to third parties without express authority is strictly forbidden. © ABB AB, 2018

This document is issued by means of a computerized system. The digitally stored original is electronically approved. The approved document has a name and date stamped in the approval field. A manual signature is not required.

Rev	Revision	Prepared	Approved	Date
01	Revisions made are marked. Also refer last page for revision notes.	Thiruchunapali, Vijaya, Bhaskar	Naik, Ashish	2018-06-26

Contract No: CC-CS/651-SR2/HVDC-3063/7G10/CA-I/5817-5821 dated 2017-01-25

Client:

POWER GRID CORPORATION OF INDIA LIMITED
(A Government of India Enterprise)

पावरग्रिड

BHARAT HEAVY ELECTRICALS LTD.
TRANSMISSION BUSINESS GROUP

Station Name: Pugalur

Classification No.: FJB-64

Based on: -

Prepared: Thiruchunapali, Vijaya, Bhaskar 2018-01-10

Approved: Naik, Ashish 2018-01-23

Doc. Kind: Layout drawing

Project name: ±800kV, 6000MW HVDC Raigarh-Pugalur Terminals

Title: Pole2 Layout & Sections
Layout And Sections

Status: Issued

Item designation: -

Resp dept: PGGI/DCHUBTPM

Rev ind: 01

Language: -

ABB AB - HVDC

Document number: 1JNL100484-564

Sheet/of: 13 / 13

(A2)

ANNEXURE-J (POLE-3)

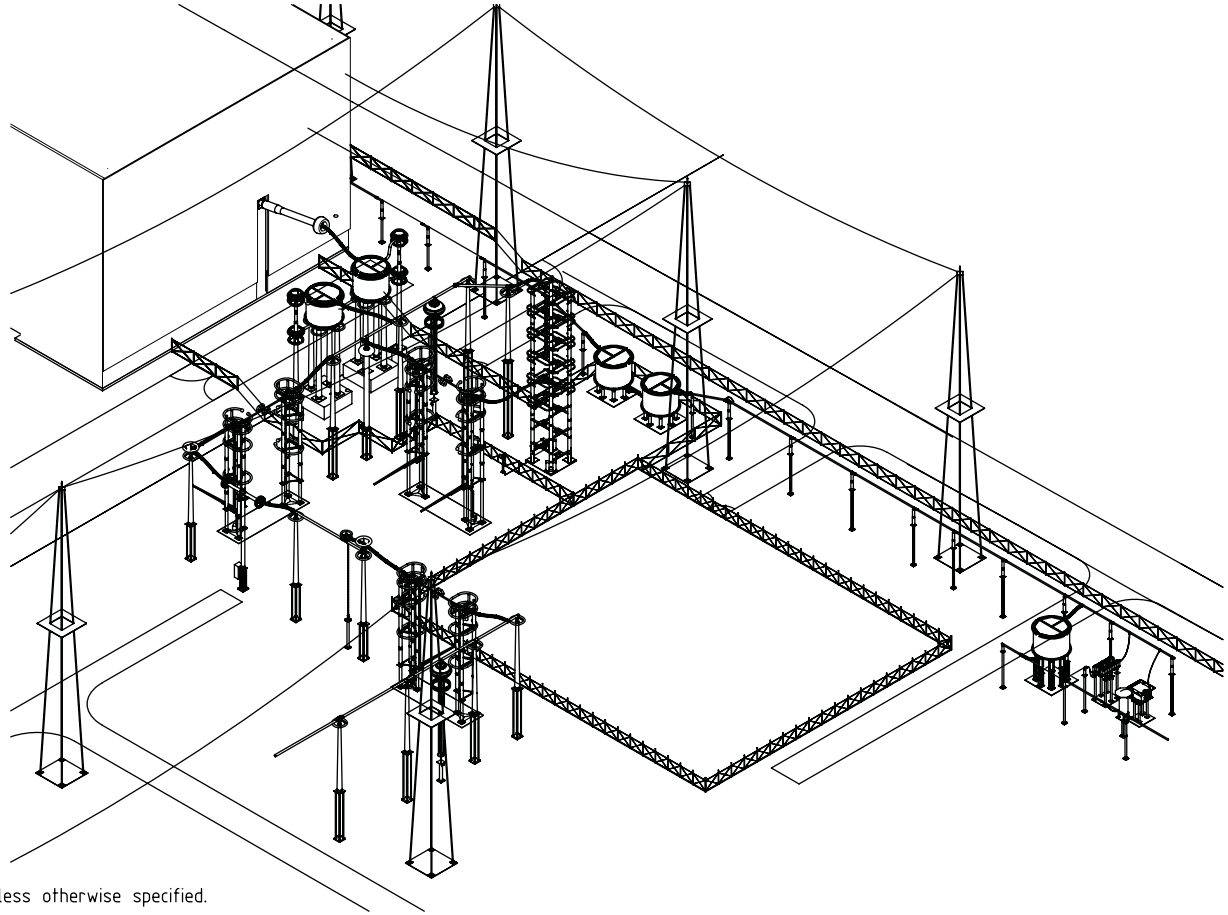

Key Plan

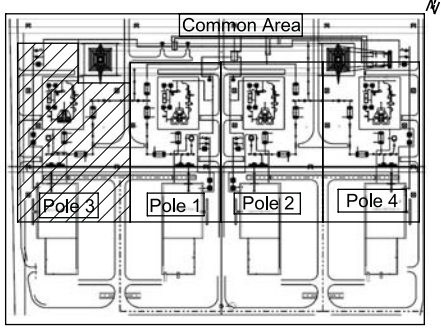

Notes: 01

1. All Dimensions are in mm unless otherwise specified.
2. Conductor Data

Pole Bus:
- Ø 250/226 mm Al.Tube
- Ø 48.7mm ,AAC

Neutral Bus:
- Ø 160/140mm Al.Tube
- Ø 32.6mm ,AAC

Damping wires:
- Ø 48.7mm, AAC (Length of the damping wire shall be = 2/3 of length of the busbar tube.)
- Ø 32.6mm, AAC (Length of the damping wire shall be = 2/3 of length of the busbar tube.)

3. Refer OGA drawing for slope details 1JNL100336-120 sheet.2

Reference Documents: 01

1.Requirement on the size of shielding and air Clearances for Valvehall and DC Yard
(Doc No. 1JNL449408)
2.Insulation Coordination
(Doc No. 1JNL434222)
3.Main Circuit Single Line Diagram, Pugalur
(Doc No. 1JNL437657)
4.Dc Yard Layout and sections Overview
(Doc No. 1JNL100485-230)

Rev	Revision	Prepared	Approved	Date
01	Revisions made are marked. Also refer last page for revision notes.	Thiruchunapali, Vijaya, Bhaskar	Naik, Ashish	2018-06-26

Contract No: CC-CS/651-SR2/HVDC-3063/7G10/CA-I/5817-5821 dated 2017-01-25

Client: POWER GRID CORPORATION OF INDIA LIMITED (A Government of India Enterprise)

BHARAT HEAVY ELECTRICALS LTD. TRANSMISSION BUSINESS GROUP

Station Name: Pugalur

Classification No.: FJB-64

Based on

Prepared: Thiruchunapali, Vijaya, Bhaskar

Approved: Naik, Ashish 2018-01-23

Doc. Kind: Layout drawing

Project name: ±800kV, 6000MW HVDC Raigarh-Pugalur Terminals

Title: Pole3 Layout & Sections DC Yard

Status: Issued

Resp dept: PGGI/DCHUBTPM

Rev ind: 01

Item designation

Language

ABB AB - HVDC

Document number: 1JNL100484-566

Sheet of 1 / 9

We reserve all rights in this document and in the information contained therein. Reproduction, use or disclosure to third parties without express authority is strictly forbidden. © ABB AB, (SE)

This document is issued by means of a computerized system. The digitally stored original is electronically approved. The approved document has a watermark and is available in the document system. A manual signature is not required.

(A2)

ANNEXURE-J (POLE-3)

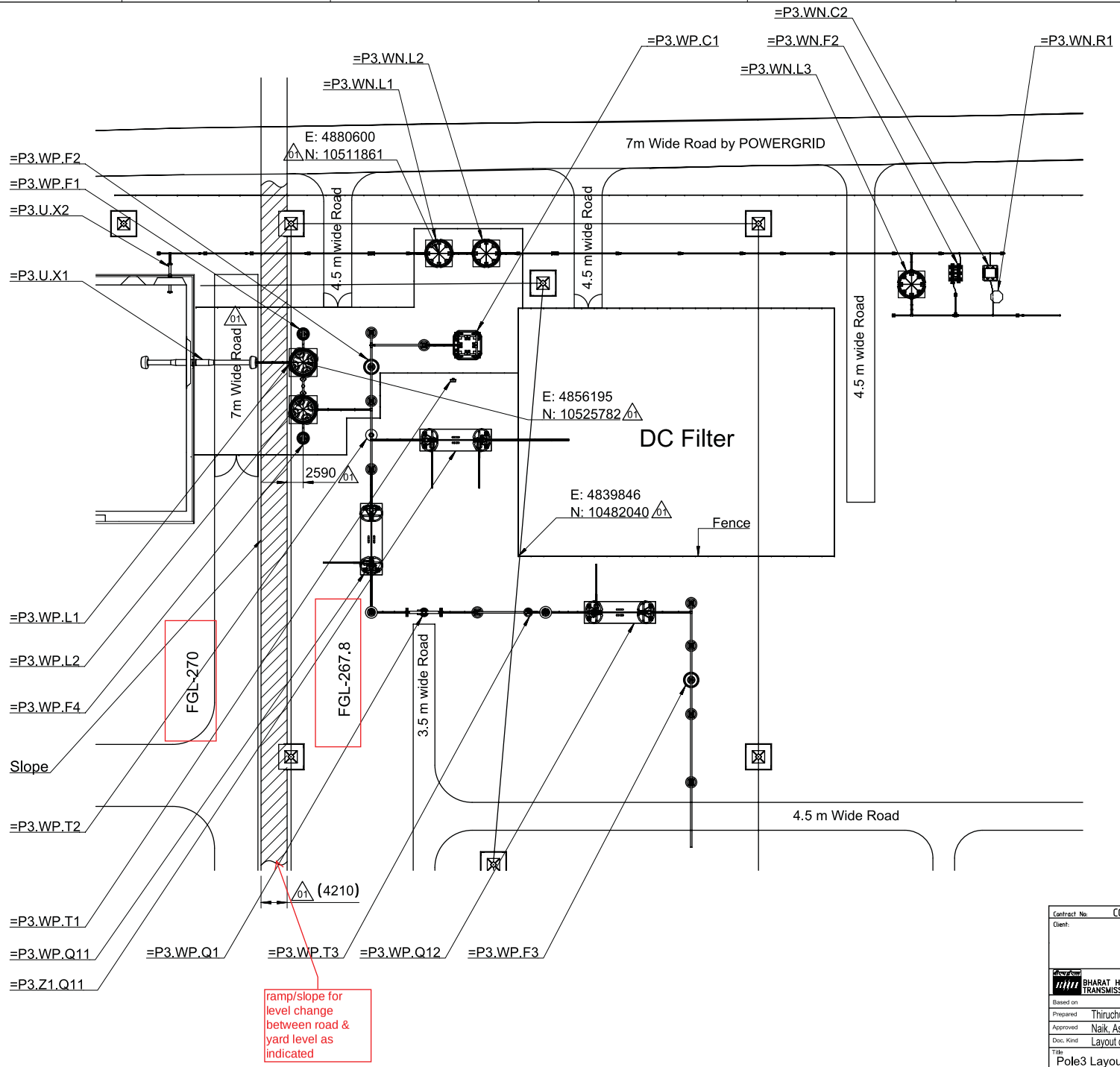

Rev	Revision	Prepared	Approved	Date
01	Revisions made are marked. Also refer last page for revision notes.	Thiruchunapali, Vijaya, Bhaskar	Naik, Ashish	2018-06-26

Contract No: CC-CS/651-SR2/HVDC-3063/7G10/CA-I/5817-5821 dated 2017-01-25

Client: POWER GRID CORPORATION OF INDIA LIMITED (A Government of India Enterprise)

BHARAT HEAVY ELECTRICALS LTD. TRANSMISSION BUSINESS GROUP

Station Name: Pugalur

Classification No.: FJB-64

Based on

Prepared: Thiruchunapali, Vijaya, Bhaskar

Approved: Naik, Ashish 2018-01-23

Doc. Kind: Layout drawing

Project name: ±800kV, 6000MW HVDC Raigarh-Pugalur Terminals

Title: Pole3 Layout & Sections DC Yard

Status: Issued

Resp dept: PGGI/DCHUBTPM

Rev ind: 01

Item designation

Language

ABB AB - HVDC

Document number: 1JNL100484-566

Sheet 2 / 9

(A2)

We reserve all rights in this document and in the information contained therein. Reproduction, use or disclosure to third parties without express authority is strictly prohibited. © ABB AB, 2018

This document is issued by means of a computerized system. The digitally stored original is electronically approved. The approved document has a name and approval date in the upper right corner. A manual signature is not required.

ANNEXURE-J (POLE-3)

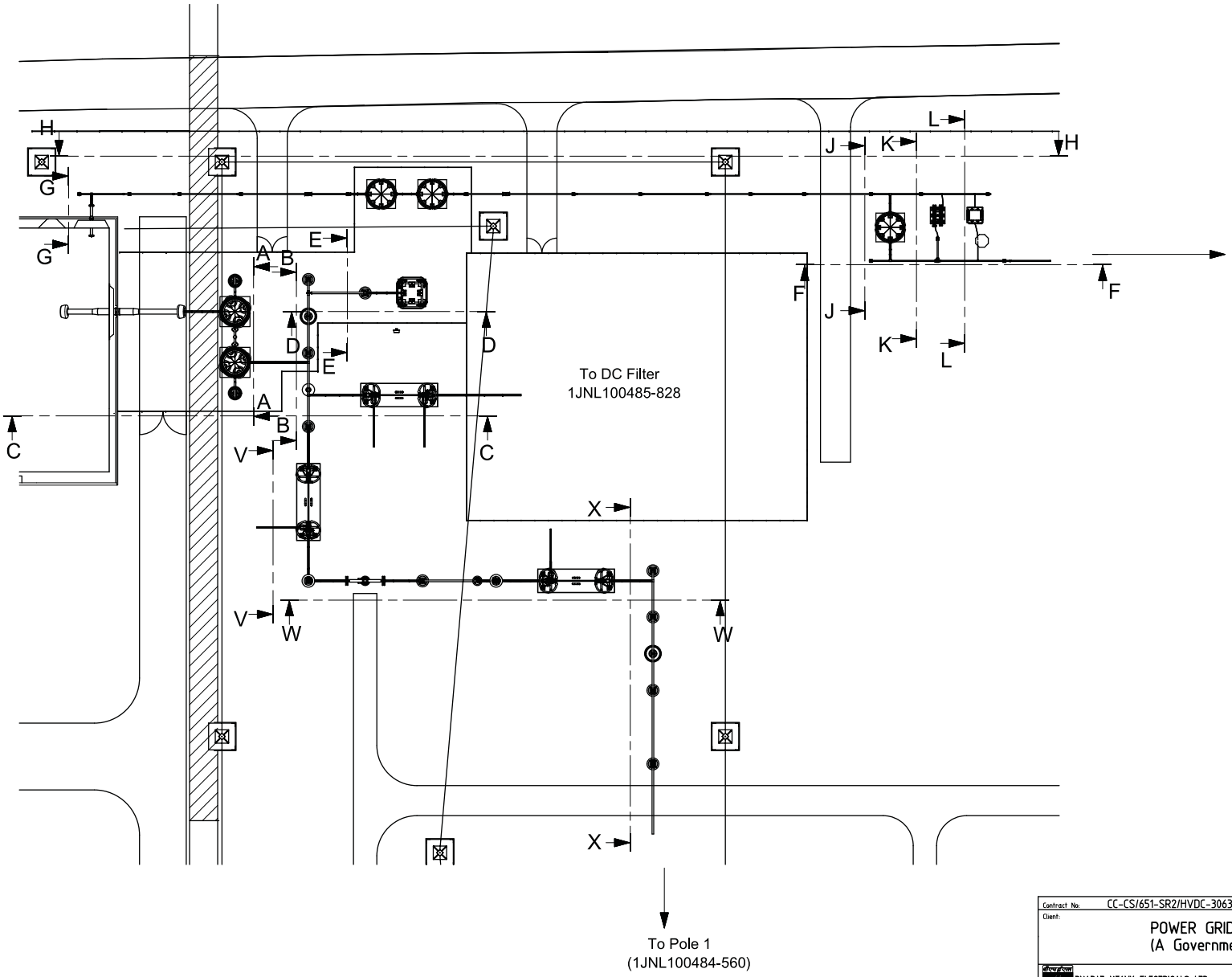

Note:

Section A-A see sheet number 4
Section B-B see sheet number 4

Section C-C see sheet number 5
Section D-D see sheet number 5

Section E-E see sheet number 6
Section F-F see sheet number 6
Section G-G see sheet number 6

Section H-H see sheet number 7
Section J-J see sheet number 7
Section K-K see sheet number 7
Section L-L see sheet number 7

Section V-V see sheet number 8
Section W-Wsee sheet number 8
Section X-X see sheet number 8

We reserve all rights in this document and in the information contained therein. Reproduction, use or disclosure to third parties without express authority is strictly prohibited. © ABB AB, 2018

This document is issued by means of a computerized system. The digital stored original is electronically approved. The approved document has a name and date approved in the approved field. A manual signature is not required.

Rev	Revision	Prepared	Approved	Date
01	Revisions made are marked. Also refer last page for revision notes.	Thiruchunapali, Vijaya, Bhaskar	Naik, Ashish	2018-06-26

Contract No: CC-CS/651-SR2/HVDC-3063/7G10/CA-I/5817-5821 dated 2017-01-25

Client: POWER GRID CORPORATION OF INDIA LIMITED (A Government of India Enterprise)

BHARAT HEAVY ELECTRICALS LTD. TRANSMISSION BUSINESS GROUP

Station Name: Pugalur

Classification No.: FJB-64

Based on: -

Prepared: Thiruchunapali, Vijaya, Bhaskar

Approved: Naik, Ashish 2018-01-23

Doc. Kind: Layout drawing

Project name: ±800kV, 6000MW HVDC Raigarh-Pugalur Terminals

Title: Pole3 Layout & Sections DC Yard

Status: Issued

Resp dept: PGGI/DCHUBTPM

Rev ind: 01

Item designation:

Language:

ABB AB - HVDC

Document number: 1JNL100484-566

Sheet 3 / 9

(A2)

ANNEXURE-J (POLE-3)

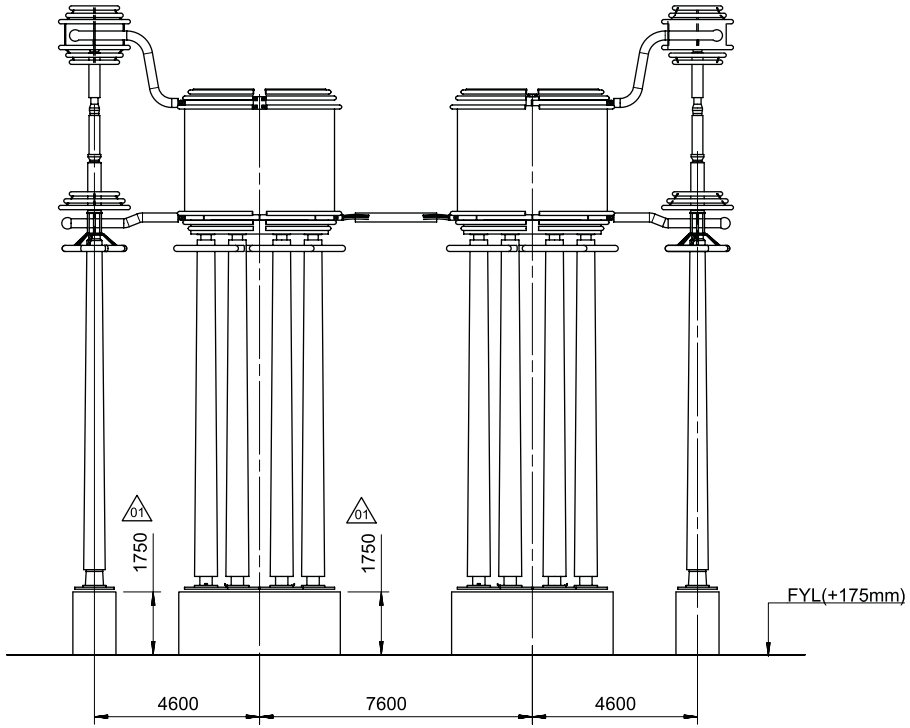

SECTION A-A

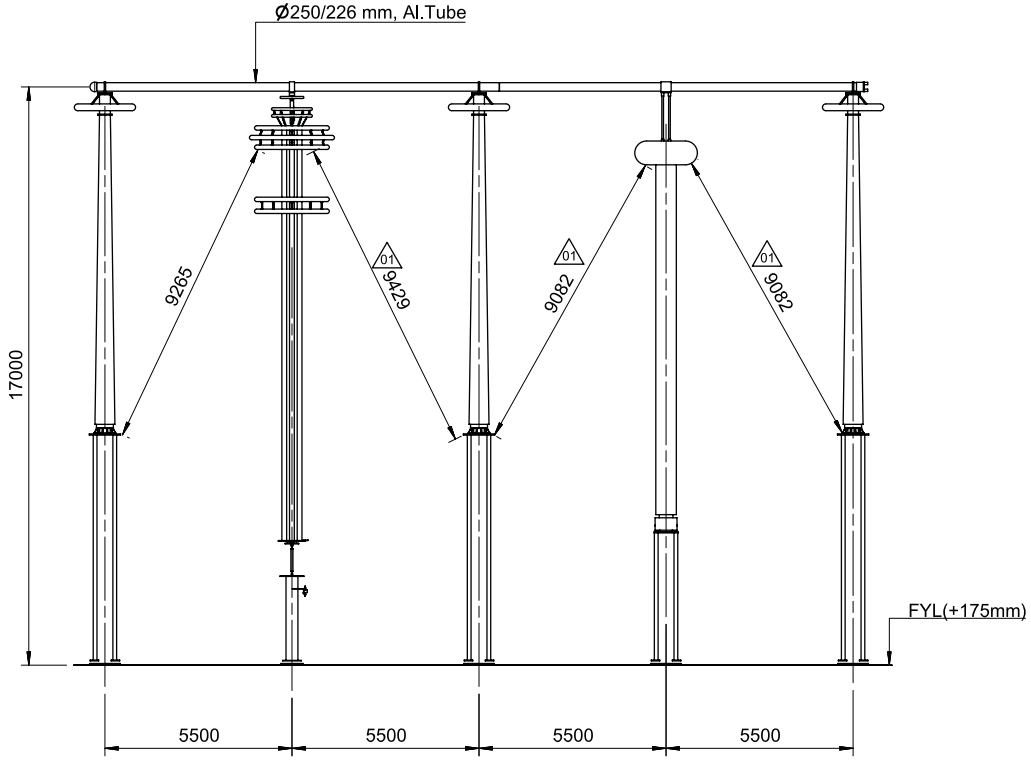

SECTION B-B

We reserve all rights in this document and in the information contained therein. Reproduction, use or disclosure to third parties without express authority is strictly forbidden. © ABB AB, 2018

This document is issued by means of a computerized system. The digitally stored original is electronically approved. The approved document has a name and date approved in the approved field. A manual signature is not required.

Rev	Revision	Prepared	Approved	Date
01	Revisions made are marked. Also refer last page for revision notes.	Thiruchunapali, Vijaya, Bhaskar	Naik, Ashish	2018-06-26

Contract No: CC-CS/651-SR2/HVDC-3063/7G10/CA-I/5817-5821 dated 2017-01-25

Client:

POWER GRID CORPORATION OF INDIA LIMITED
(A Government of India Enterprise)

पावरग्रिड

BHARAT HEAVY ELECTRICALS LTD.
TRANSMISSION BUSINESS GROUP

Station Name: Pugalur

Classification No.: FJB-64

Based on

Prepared: Thiruchunapali, Vijaya, Bhaskar

Approved: Naik, Ashish 2018-01-23

Doc. Kind: Layout drawing

Project name: ±800kV, 6000MW HVDC Raigarh-Pugalur Terminals

Title: Pole3 Layout & Sections DC Yard

Status: Issued

Resp dept: PGGI/DCHUBTPM

Rev ind: 01

Item designation

Language

ABB AB - HVDC

Document number: 1JNL100484-566

Sheet/of: 4 / 9

(A2)

ANNEXURE-J (POLE-3)

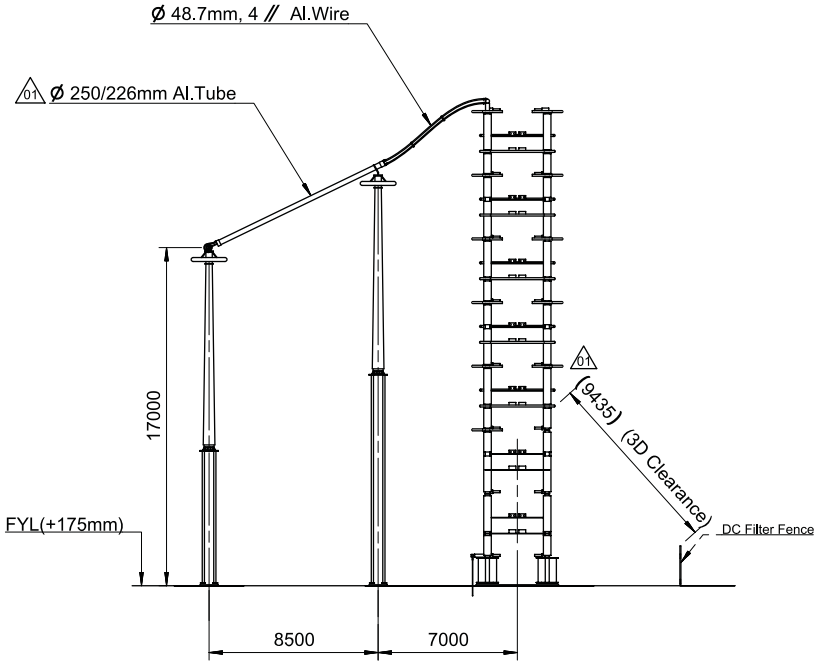

SECTION D-D 01

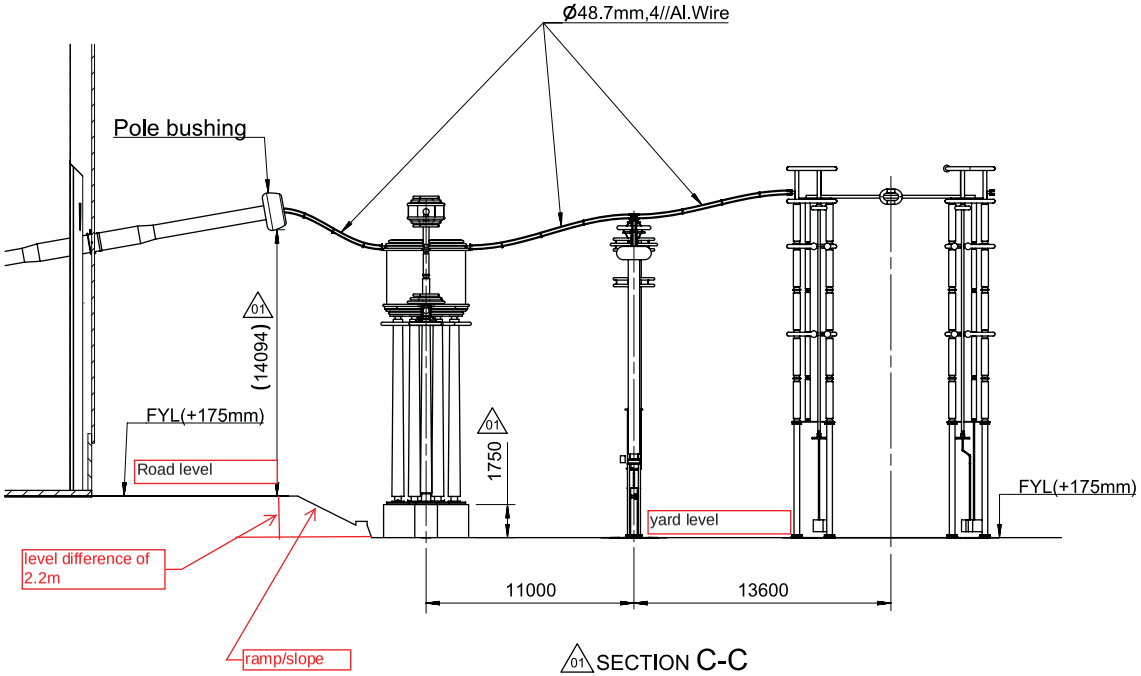

01 SECTION C-C

Rev	Revision	Prepared	Approved	Date
01	Revisions made are marked. Also refer last page for revision notes.	Thiruchunapali, Vijaya, Bhaskar	Naik, Ashish	2018-06-26

Contract No: CC-CS/651-SR2/HVDC-3063/7G10/CA-I/5817-5821 dated 2017-01-25

Client: POWER GRID CORPORATION OF INDIA LIMITED (A Government of India Enterprise)

BHARAT HEAVY ELECTRICALS LTD. TRANSMISSION BUSINESS GROUP

Station Name: Pugalur

Classification No.: FJB-64

Based on

Prepared: Thiruchunapali, Vijaya, Bhaskar

Approved: Naik, Ashish 2018-01-23

Doc. Kind: Layout drawing

Project name: ±800kV, 6000MW HVDC Raigarh-Pugalur Terminals

Title: Pole3 Layout & Sections DC Yard

Status: Issued

Resp dept: PGGI/DCHUBTPM

Rev ind: 01

Language: -

Item designation

ABB AB - HVDC

Document number: 1JNL100484-566

Sheet/of: 5 / 9

We reserve all rights in this document and in the information contained therein. Reproduction, use or disclosure to third parties without express authority is strictly forbidden. © ABB AB, (SE)

This document is issued by means of a computerized system. The digitally stored original is electronically approved. The approved document has a name and approval date in the upper right corner. A manual signature is not required.

(A2)

ANNEXURE-J (POLE-3)

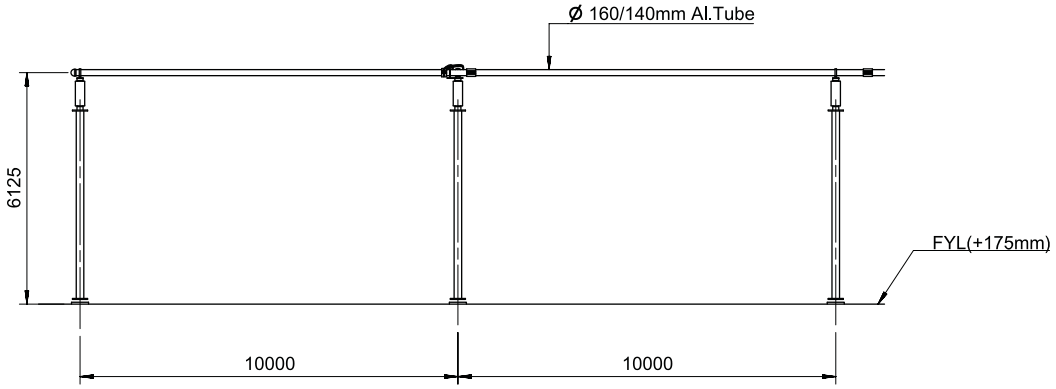

SECTION F-F

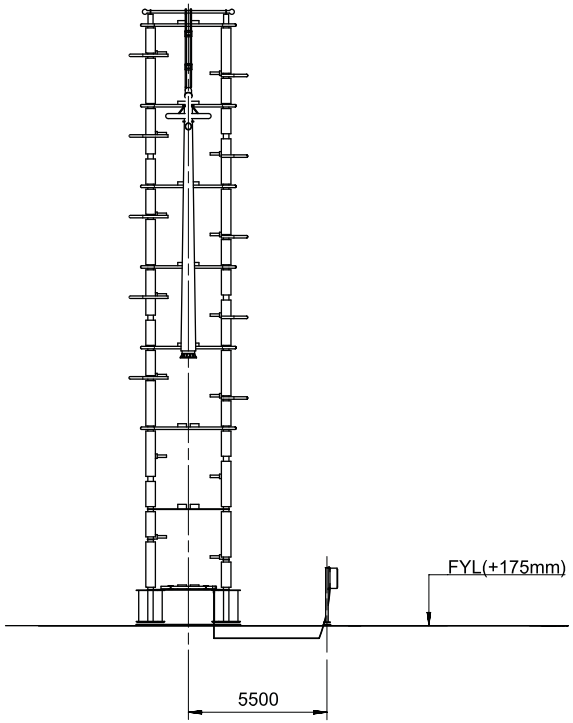

SECTION E-E

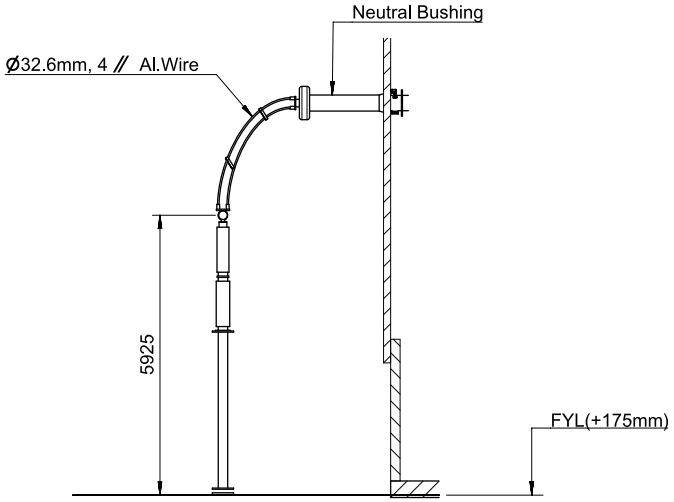

SECTION G-G

We reserve all rights in this document and in the information contained therein. Reproduction, use or disclosure to third parties without express authority is strictly forbidden. © ABB AB, (SE)

This document is issued by means of a computerized system. The digitally stored original is electronically approved. The approved document has a name and a date instead of a handwritten signature. A manual signature is not required.

Rev	Revision	Prepared	Approved	Date
01	Revisions made are marked. Also refer last page for revision notes.	Thiruchunapali, Vijaya, Bhaskar	Naik, Ashish	2018-06-26

Contract No: CC-CS/651-SR2/HVDC-3063/7G10/CA-I/5817-5821 dated 2017-01-25

Client: POWER GRID CORPORATION OF INDIA LIMITED (A Government of India Enterprise)

BHARAT HEAVY ELECTRICALS LTD. TRANSMISSION BUSINESS GROUP

Station Name: Pugalur

Classification No.: FJB-64

Based on

Prepared: Thiruchunapali, Vijaya, Bhaskar

Approved: Naik, Ashish 2018-01-23

Doc. Kind: Layout drawing

Project name: ±800kV, 6000MW HVDC Raigarh-Pugalur Terminals

Title: Pole3 Layout & Sections DC Yard

Status: Issued

Resp dept: PGGI/DCHUBTPM

Rev ind: 01

Item designation

Language

ABB AB - HVDC

Document number: 1JNL100484-566

Sheet 6 / 9

(A2)

ANNEXURE-J (POLE-3)

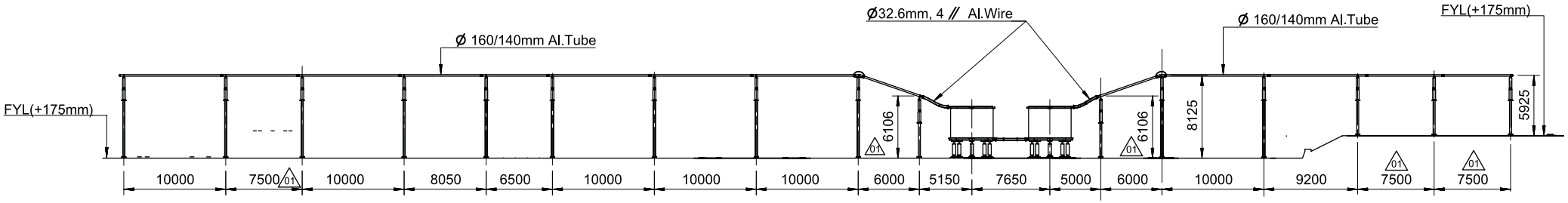

SECTION H-H 01

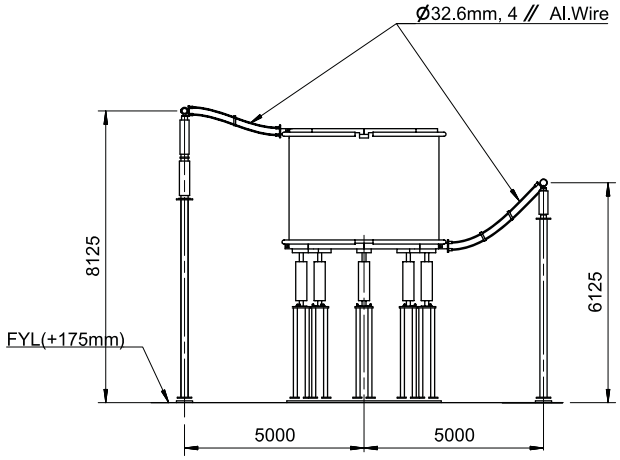

SECTION J-J

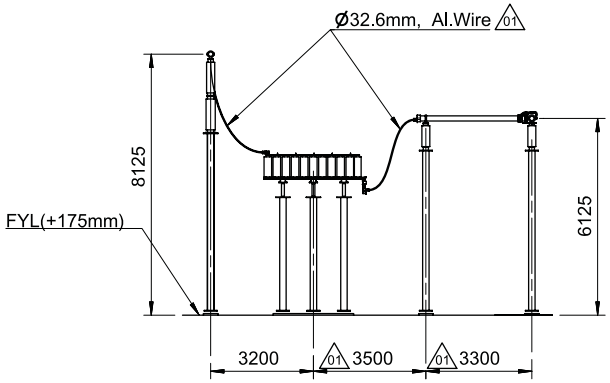

SECTION K-K

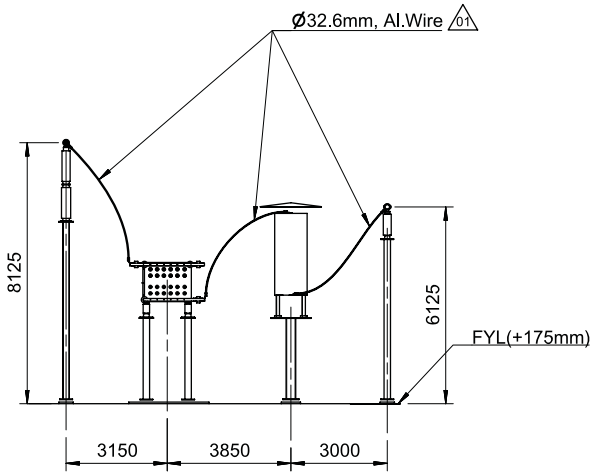

SECTION L-L

Rev	Revision	Prepared	Approved	Date
01	Revisions made are marked. Also refer last page for revision notes.	Thiruchunapali, Vijaya, Bhaskar	Naik, Ashish	2018-06-26

Contract No: CC-CS/651-SR2/HVDC-3063/7G10/CA-I/5817-5821 dated 2017-01-25

Client: POWER GRID CORPORATION OF INDIA LIMITED (A Government of India Enterprise)

BHARAT HEAVY ELECTRICALS LTD. TRANSMISSION BUSINESS GROUP

Station Name: Pugalur

Classification No.: FJB-64

Based on

Prepared: Thiruchunapali, Vijaya, Bhaskar

Approved: Naik, Ashish 2018-01-23

Doc. Kind: Layout drawing

Project name: ±800kV, 6000MW HVDC Raigarh-Pugalur Terminals

Title: Pole3 Layout & Sections DC Yard

Status: Issued

Resp dept: PGGI/DCHUBTPM

Rev ind: 01

Item designation

Language

ABB AB - HVDC

Document number: 1JNL100484-566

Sheet of: 7 / 9

(A2)

We reserve all rights in this document and in the information contained therein. Reproduction, use or disclosure to third parties without express authority is strictly forbidden. © ABB AB, (SE)

This document is issued by means of a computerized system. The digitally stored original is electronically approved. The approved document has a name and a date instead of a handwritten signature. A manual signature is not required.

ANNEXURE-J (POLE-3)

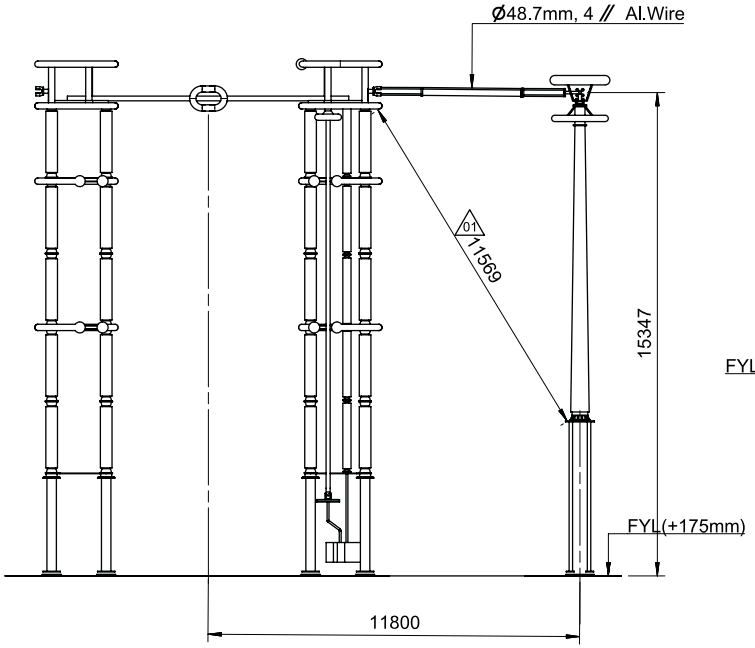

SECTION V-V

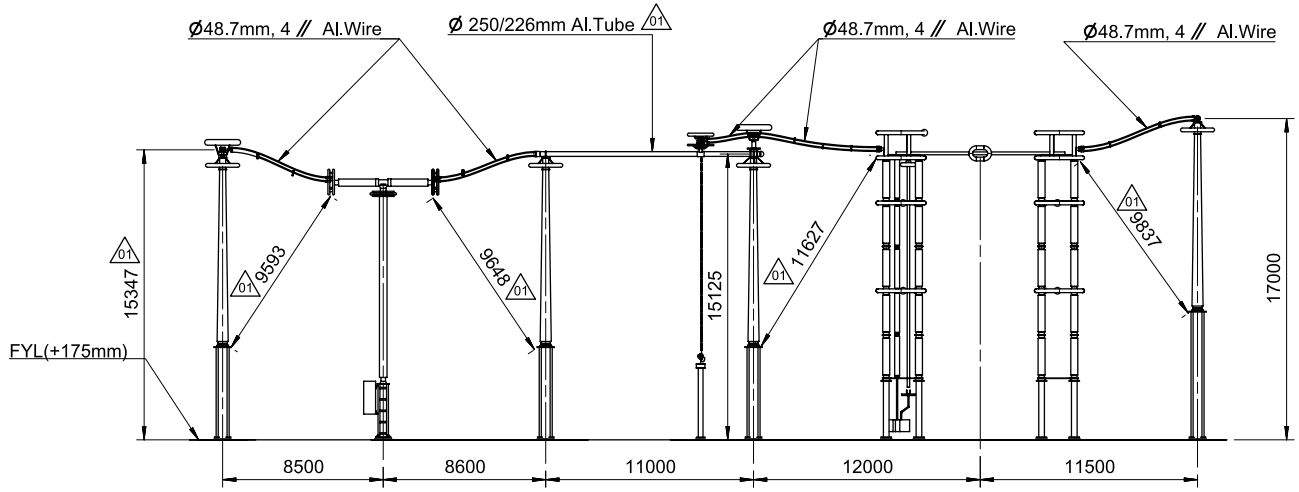

SECTION W-W

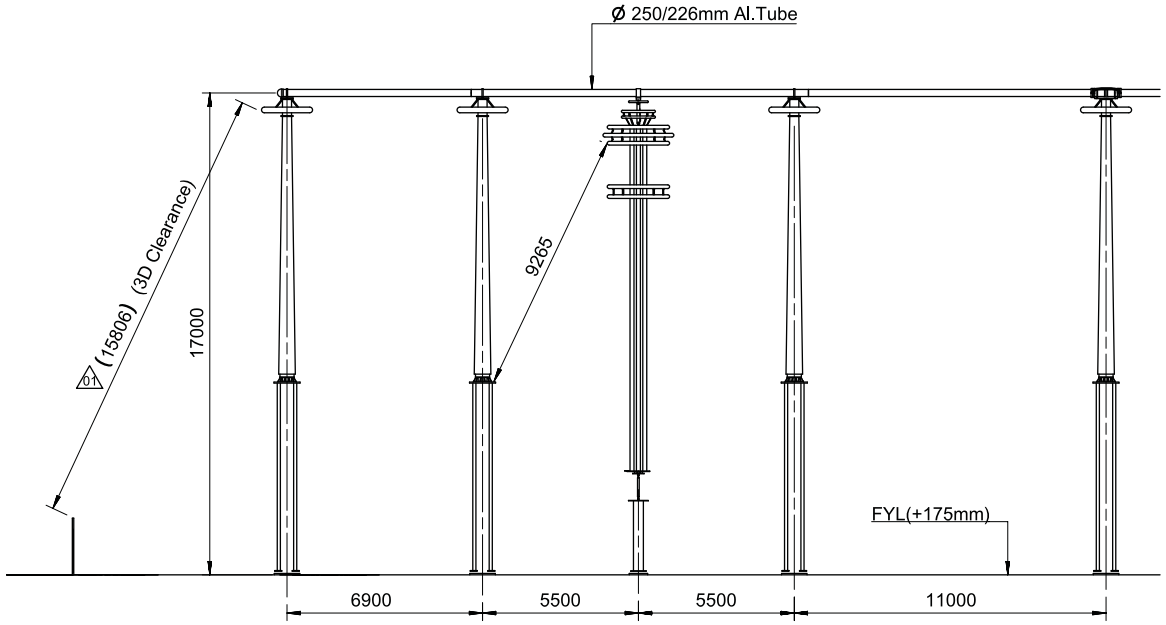

01 SECTION X-X

Rev	Revision	Prepared	Approved	Date
01	Revisions made are marked. Also refer last page for revision notes.	Thiruchunapali, Vijaya, Bhaskar	Naik, Ashish	2018-06-26

Contract No: CC-CS/651-SR2/HVDC-3063/7G10/CA-I/5817-5821 dated 2017-01-25

Client: POWER GRID CORPORATION OF INDIA LIMITED (A Government of India Enterprise)

BHARAT HEAVY ELECTRICALS LTD. TRANSMISSION BUSINESS GROUP

Station Name: Pugalur

Classification No.: FJB-64

Based on

Prepared: Thiruchunapali, Vijaya, Bhaskar

Approved: Naik, Ashish 2018-01-23

Doc. Kind: Layout drawing

Project name: ±800kV, 6000MW HVDC Raigarh-Pugalur Terminals

Title: Pole3 Layout & Sections DC Yard

Status: Issued

Resp dept: PGGI/DCHUBTPM

Rev ind: 01

Item designation

Language

ABB AB - HVDC

Document number: 1JNL100484-566

Sheet of 8 / 9

We reserve all rights in this document and in the information contained therein. Reproduction, use or disclosure to third parties without express authority is strictly forbidden. © ABB AB, (SE)

This document is issued by means of a computerized system. The digitally stored original is electronically approved. The approved document has a name and approval date in the upper right corner. A manual signature is not required.

(A2)

ANNEXURE-J (POLE-3)

Revision History :

Revision No.	Date	Sheet No.	Revision Note
01	26-06-2018	Sheet 1	Notes updated
			Reference documents updated
		Sheet 2	Dimensions updated
			Equipment north east coordinate added
			Road size updated
		Sheet 4	Dimensions updated
		Sheet 5	Dimensions updated
			Tube size updated
			Section D-D view updated to show sectional clearance to DC Filter fence
		Sheet 7	Wire note updated
			Dimensions updated
		Sheet 8	Tube size updated
			Dimensions updated
			Section X-X view updated and sectional clearance to DC Filter fence shown

We reserve all rights in this document and in the information contained therein. Reproduction, use or disclosure to third parties without express authority is strictly forbidden. © ABB AB, 2018

This document is issued by means of a computerized system. The digitally stored original is electronically approved. The approved document has a name and signature in the approval field. A manual signature is not required.

Rev	Revision	Prepared	Approved	Date
01	Revisions made are marked. Also refer last page for revision notes.	Thiruchunapali, Vijaya, Bhaskar	Naik, Ashish	2018-06-26

Contract No: CC-CS/651-SR2/HVDC-3063/7G10/CA-I/5817-5821 dated 2017-01-25

Client: POWER GRID CORPORATION OF INDIA LIMITED (A Government of India Enterprise)

BHARAT HEAVY ELECTRICALS LTD. TRANSMISSION BUSINESS GROUP

Station Name: Pugalur

Classification No.: FJB-64

Based on: -

Prepared: Thiruchunapali, Vijaya, Bhaskar 2018-01-10

Approved: Naik, Ashish 2018-01-23

Doc. Kind: Layout drawing

Project name: ±800kV, 6000MW HVDC Raigarh-Pugalur Terminals

Title: Pole3 Layout & Sections

Layout And Sections

Status: Issued

Resp dept: PGGI/DCHUBTPM

Rev ind: 01

Item designation: -

Language: -

ABB AB - HVDC

Document number: 1JNL100484-566

Sheet/of: 9 / 9

(A2)

ANNEXURE-J (POLE-4)

Key Plan

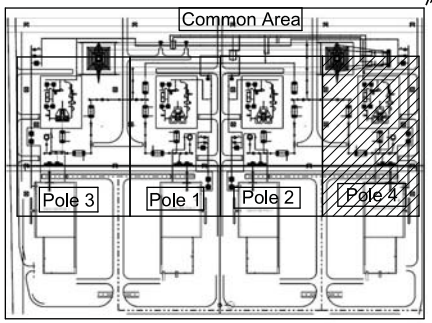

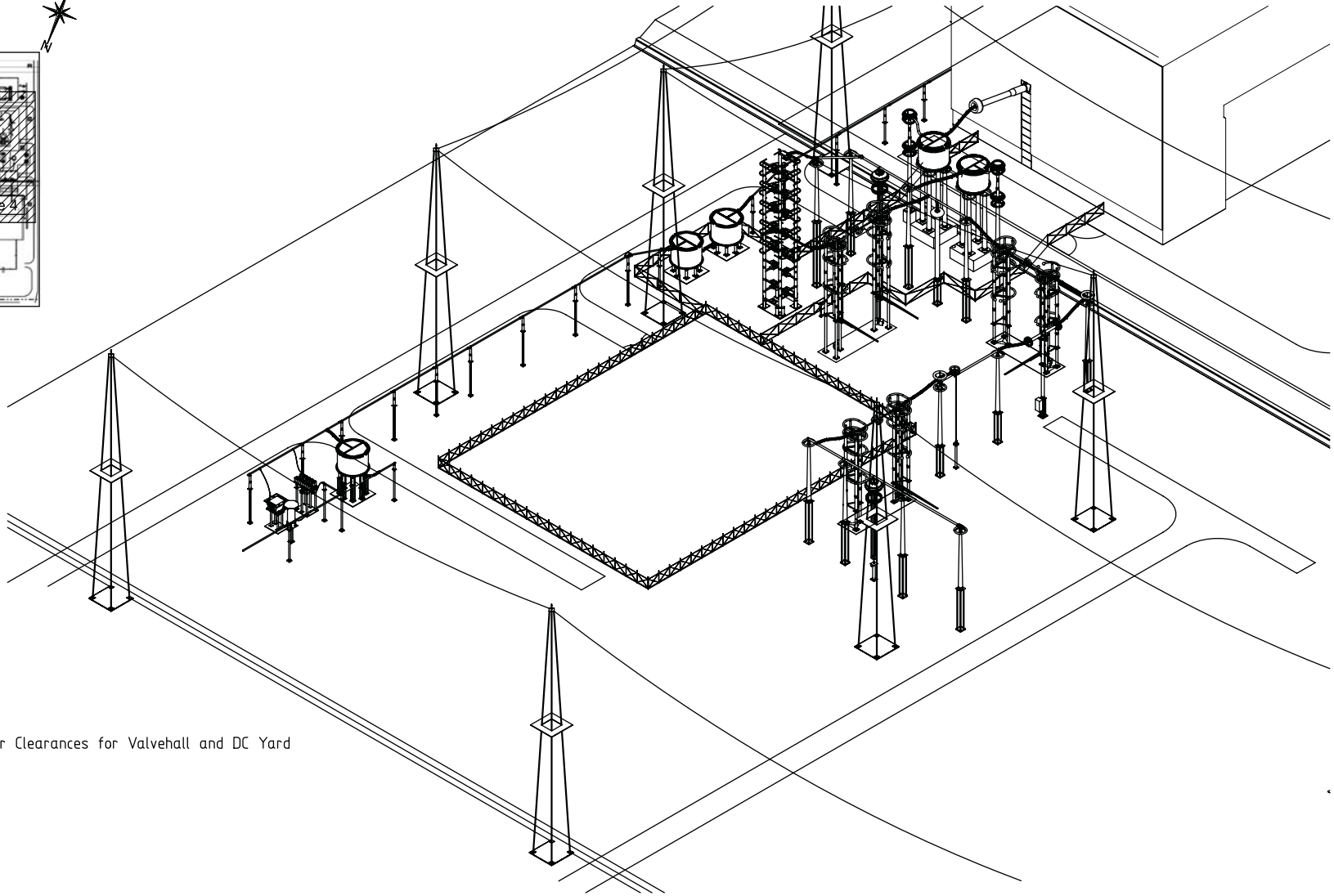

Reference Documents: 01

1. Requirement on the size of shielding and air Clearances for Valvehall and DC Yard (Doc No. 1JNL449408)
2. Insulation Coordination (Doc No. 1JNL434222)
3. Main Circuit Single Line Diagram, Pugalur (Doc No. 1JNL437657)
4. DC Yard Layout and Sections Overview (Doc No. 1JNL100485-230)

Notes: 01

1. All Dimensions are in mm unless otherwise specified.
2. Conductor Data

Pole Bus:
- Ø 250/226 mm Al.Tube
- Ø 48.7mm ,AAC

Neutral Bus:
- Ø 160/140mm Al.Tube
- Ø 32.6mm ,AAC

Damping wires:
- Ø 48.7mm, AAC for Ø 250/226mm Al.Tube (Length of the damping wire shall be = 2/3 of length of the busbar tube.)
- Ø 29mm, AAC for Ø 160/140mm Al.Tube (Length of the damping wire shall be = 2/3 of length of the busbar tube.)
3. Refer OGA drawing for slope details 1JNL100336-120 sheet.2

Rev	Revision	Prepared	Approved	Date
01	Revisions made are marked. Also refer last page for revision notes.	Thiruchunapali, Vijaya, Bhaskar	Naik, Ashish	2018-06-26

Contract No: CC-CS/651-SR2/HVDC-3063/7G10/CA-I/5817-5821 dated 2017-01-25

Client: POWER GRID CORPORATION OF INDIA LIMITED (A Government of India Enterprise)

BHARAT HEAVY ELECTRICALS LTD. TRANSMISSION BUSINESS GROUP

Station Name: Pugalur

Classification No.: FJB-64

Based on

Prepared: Thiruchunapali, Vijaya, Bhaskar

Approved: Naik, Ashish 2018-01-23

Doc. Kind: Layout drawing

Project name: ±800kV, 6000MW HVDC Raigarh-Pugalur Terminals

Title: Pole4 Layout & Sections DC Yard

Status: Issued

Resp dept: PGGI/DCHUBTPM

Rev ind: 01

Item designation

Language

ABB AB - HVDC

Document number: 1JNL100485-117

Sheet/of 1 / 9

We reserve all rights in this document and in the information contained therein. Reproduction, use or disclosure to third parties without express authority is strictly forbidden. © ABB AB, (SE)

This document is issued by means of a computerized system. The digitally stored original is electronically approved. The approved document has a watermark and a digital signature. A manual signature is not required.

(A2)

ANNEXURE-J (POLE-4)

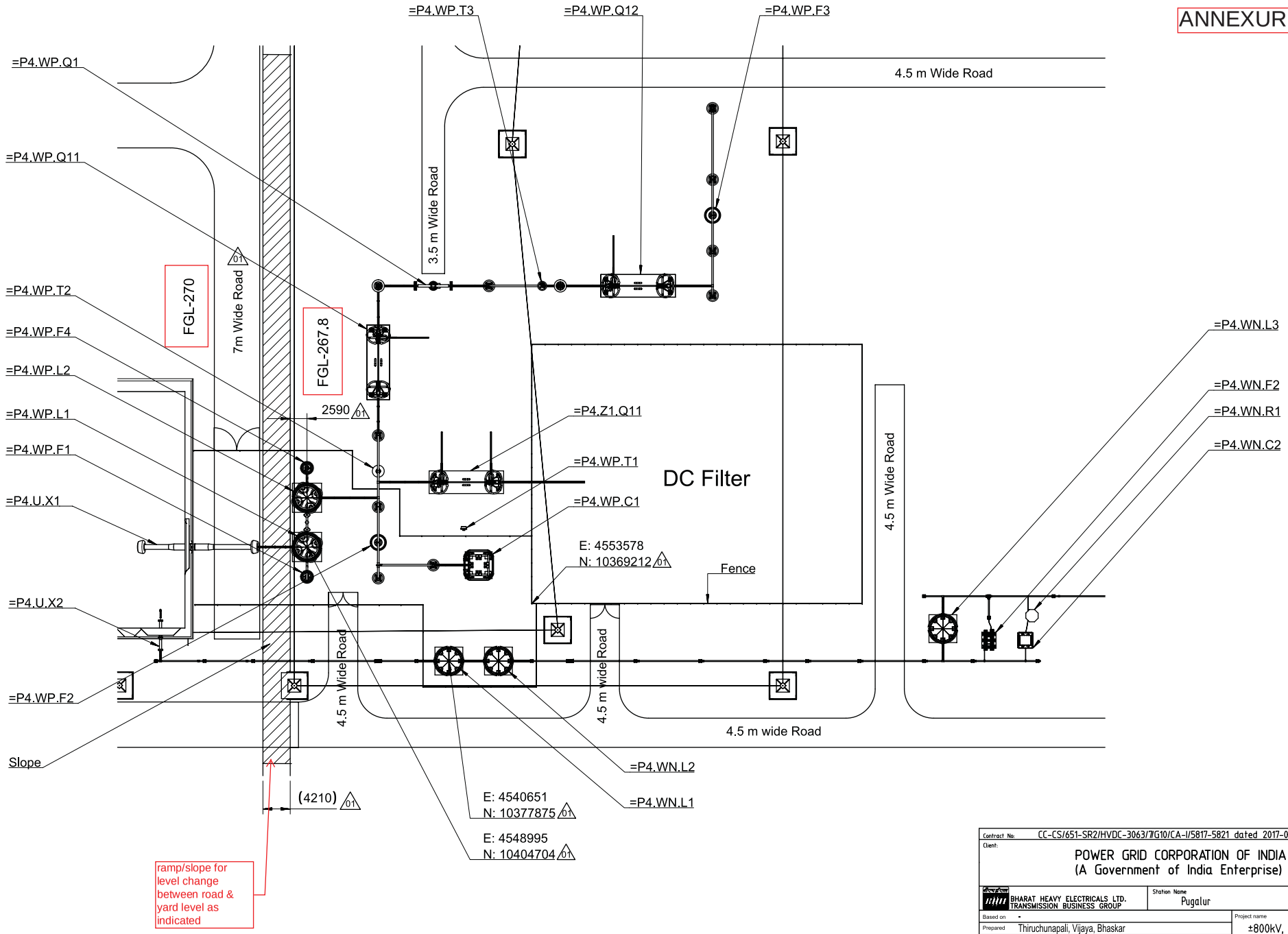

Rev	Revision	Prepared	Approved	Date
01	Revisions made are marked. Also refer last page for revision notes.	Thiruchunapali, Vijaya, Bhaskar	Naik, Ashish	2018-06-26

Contract No: CC-CS/651-SR2/HVDC-3063/7G10/CA-I/5817-5821 dated 2017-01-25

Client:

POWER GRID CORPORATION OF INDIA LIMITED
(A Government of India Enterprise)

पावरग्रिड

BHARAT HEAVY ELECTRICALS LTD. TRANSMISSION BUSINESS GROUP

Station Name: Pugalur

Classification No.: FJB-64

Based on: -

Prepared: Thiruchunapali, Vijaya, Bhaskar

Approved: Naik, Ashish 2018-01-23

Doc. Kind: Layout drawing

Project name: ±800kV, 6000MW HVDC Raigarh-Pugalur Terminals

Title: Pole4 Layout & Sections DC Yard

Status: Issued

Resp dept: PGGI/DCHUBTPM

Rev ind: 01

Item designation:

Language:

ABB AB - HVDC

Document number: 1JNL100485-117

Sheet of: 2 / 9

(A2)

We reserve all rights in this document and in the information contained therein. Reproduction, use or disclosure to third parties without express authority is strictly prohibited. © ABB AB, 2018

This document is issued by means of a computerized system. The digitally stored original is electronically approved. The approved document has a name and approval date in the upper right corner. A manual signature is not required.

ANNEXURE-J (POLE-4)

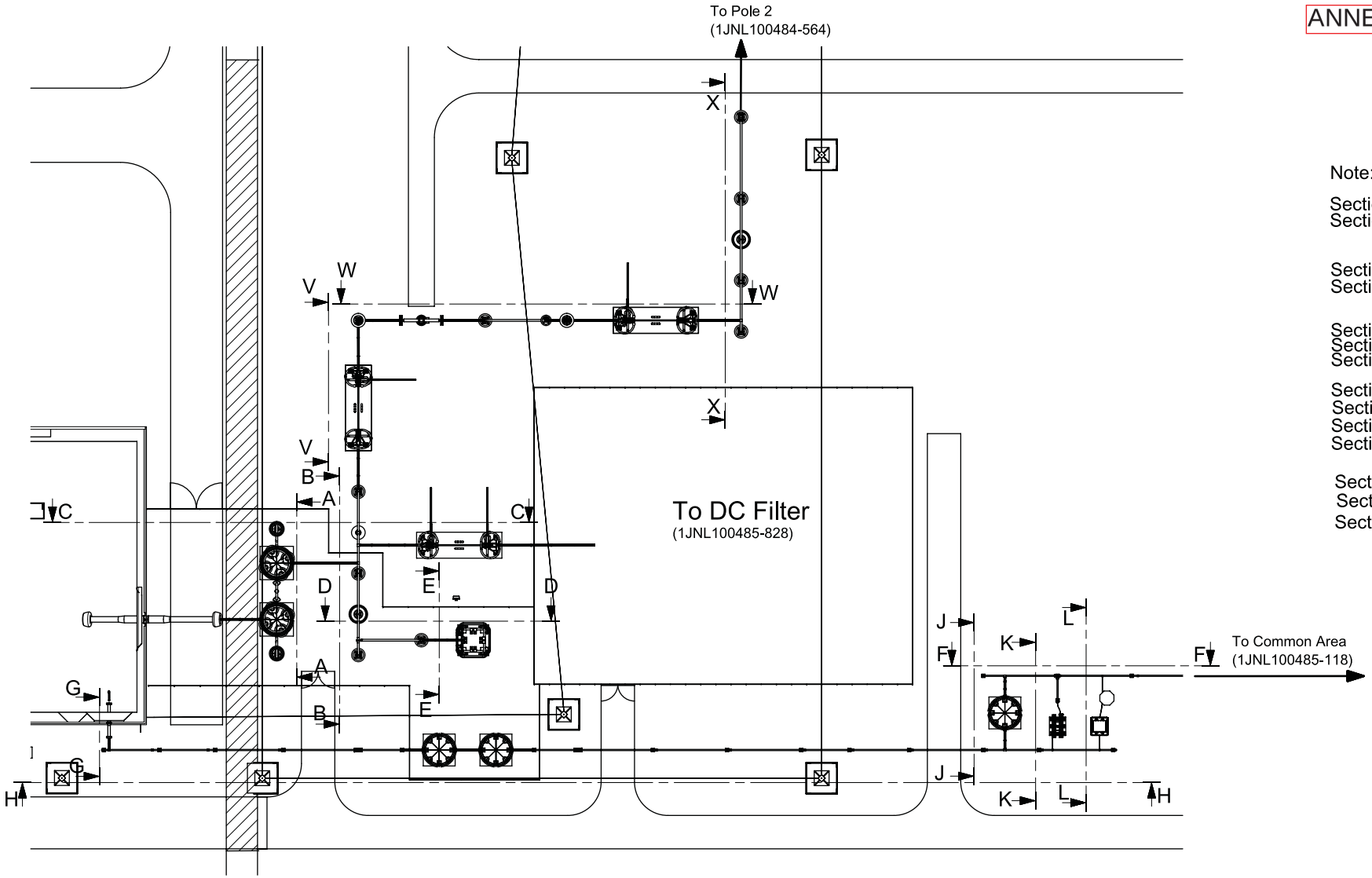

Note:

Section A-A see sheet 4
Section B-B see sheet 4

Section C-C see sheet 5
Section D-D see sheet 5

Section E-E see sheet 6
Section F-F see sheet 6
Section G-G see sheet 6

Section H-H see sheet 7
Section J-J see sheet 7
Section K-K see sheet 7
Section L-L see sheet 7

Section V-V see sheet 8
Section W-W see sheet 8
Section X-X see sheet 8

Rev	Revision	Prepared	Approved	Date
01	Revisions made are marked. Also refer last page for revision notes.	Thiruchunapali, Vijaya, Bhaskar	Naik, Ashish	2018-06-26

Contract No: CC-CS/651-SR2/HVDC-3063/7G10/CA-I/5817-5821 dated 2017-01-25

Client: POWER GRID CORPORATION OF INDIA LIMITED (A Government of India Enterprise)

BHARAT HEAVY ELECTRICALS LTD. TRANSMISSION BUSINESS GROUP

Station Name: Pugalur

Classification No.: FJB-64

Based on

Prepared: Thiruchunapali, Vijaya, Bhaskar

Approved: Naik, Ashish 2018-01-23

Doc. Kind: Layout drawing

Project name: ±800kV, 6000MW HVDC Raigarh-Pugalur Terminals

Title: Pole4 Layout & Sections DC Yard

Status: Issued

Resp dept: PGGI/DCHUBTPM

Rev ind: 01

Item designation

Language

ABB AB - HVDC

Document number: 1JNL100485-117

Sheet of 3 / 9

We reserve all rights in this document and in the information contained therein. Reproduction, use or disclosure to third parties without express authority is strictly forbidden. © ABB AB, (SE)

This document is issued by means of a computerized system. The digital stored original is electronically approved. The approved document has a name and approval date in the header. A manual signature is not required.

(A2)

ANNEXURE-J (POLE-4)

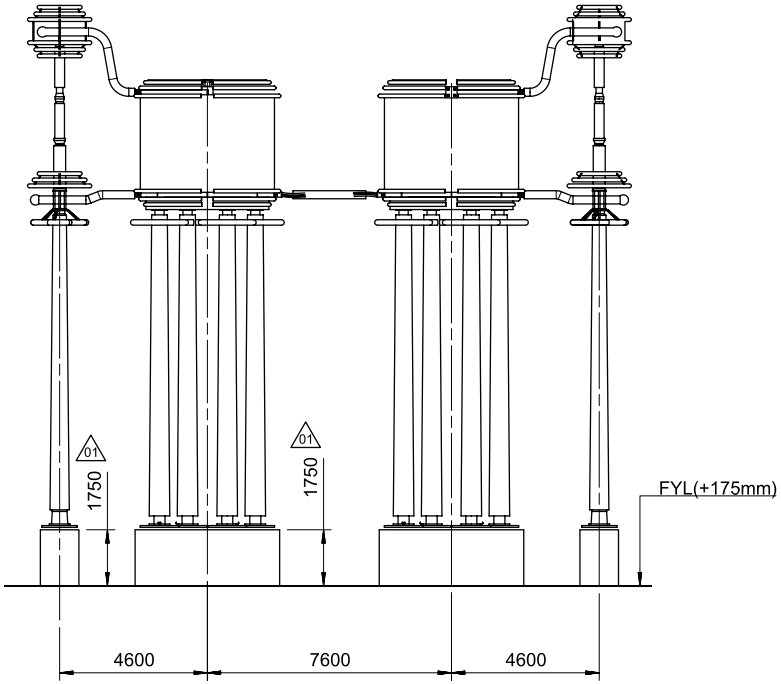

SECTION A-A

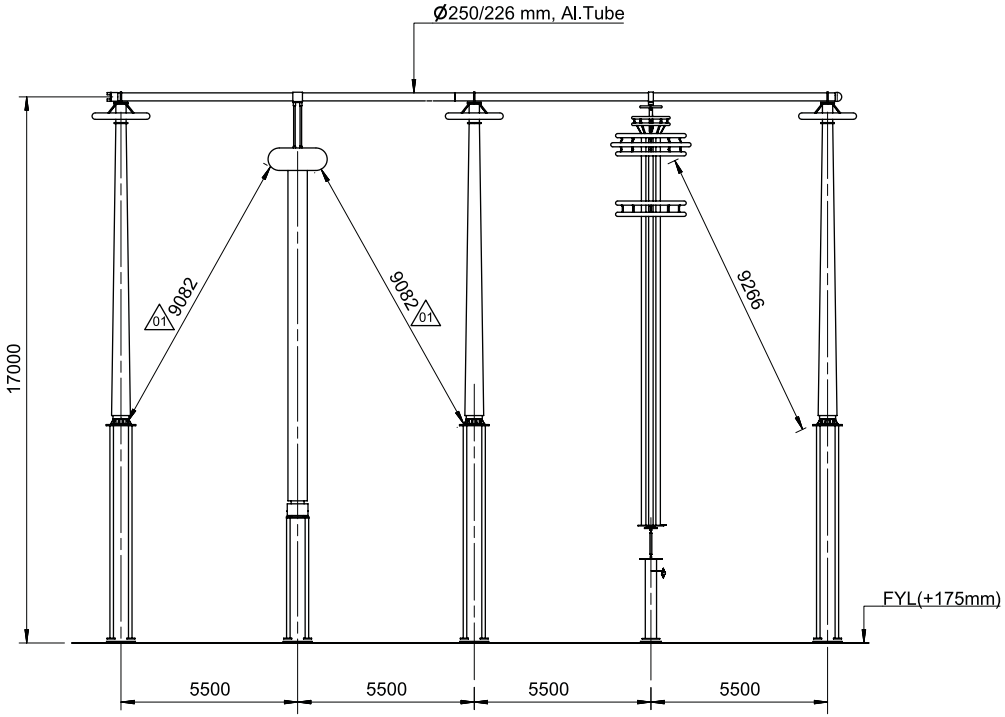

SECTION B-B

We reserve all rights in this document and in the information contained therein. Reproduction, use or disclosure to third parties without express authority is strictly prohibited. © ABB AB, (SE)

This document is issued by means of a computerized system. The digitally stored original is electronically approved. The approved document has a name and date approved in the computer system. A manual signature is not required.

Rev	Revision	Prepared	Approved	Date
01	Revisions made are marked. Also refer last page for revision notes.	Thiruchunapali, Vijaya, Bhaskar	Naik, Ashish	2018-06-26

Contract No: CC-CS/651-SR2/HVDC-3063/7G10/CA-I/5817-5821 dated 2017-01-25

Client:

POWER GRID CORPORATION OF INDIA LIMITED
(A Government of India Enterprise)

पावरग्रिड

BHARAT HEAVY ELECTRICALS LTD.
TRANSMISSION BUSINESS GROUP

Station Name: Pugalur

Classification No.: FJB-64

Based on

Prepared: Thiruchunapali, Vijaya, Bhaskar

Approved: Naik, Ashish 2018-01-23

Doc. Kind: Layout drawing

Project name: ±800kV, 6000MW HVDC Raigarh-Pugalur Terminals

Title: Pole4 Layout & Sections DC Yard

Status: Issued

Resp dept: PGGI/DCHUBTPM

Rev ind: 01

Item designation

Language

ABB AB - HVDC

Document number: 1JNL100485-117

Sheet/of: 4 / 9

(A2)

ANNEXURE-J (POLE-4)

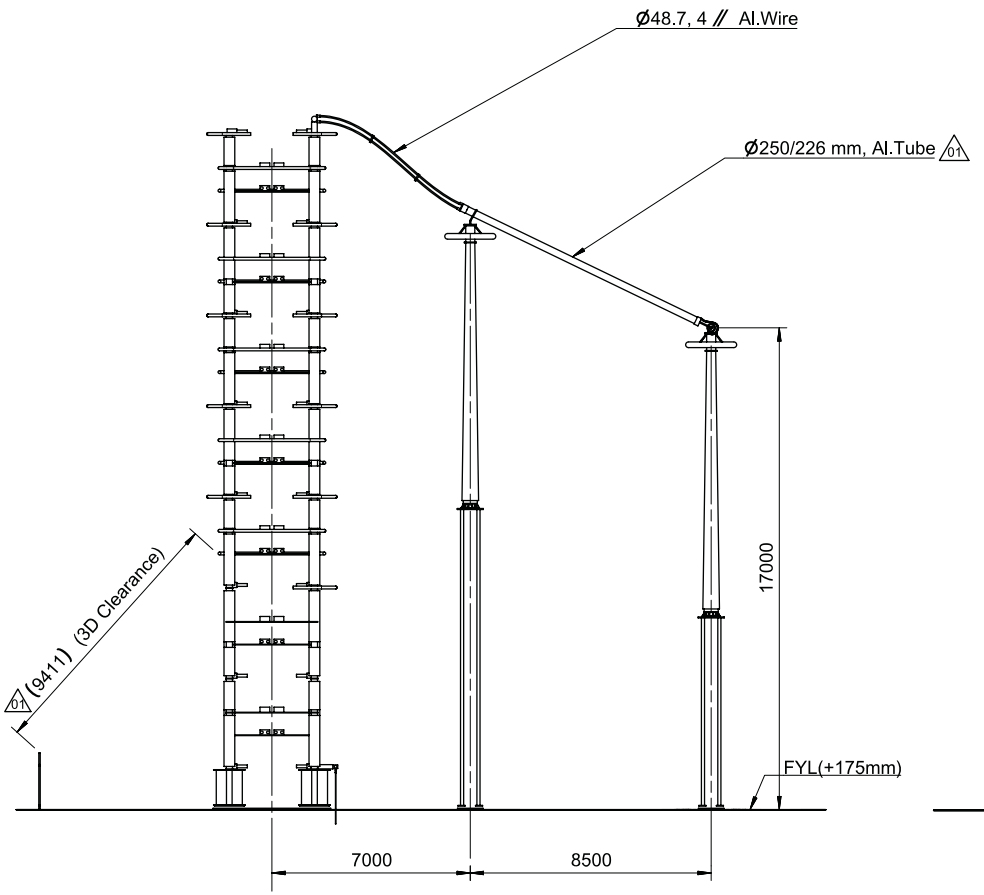

SECTION D-D 01

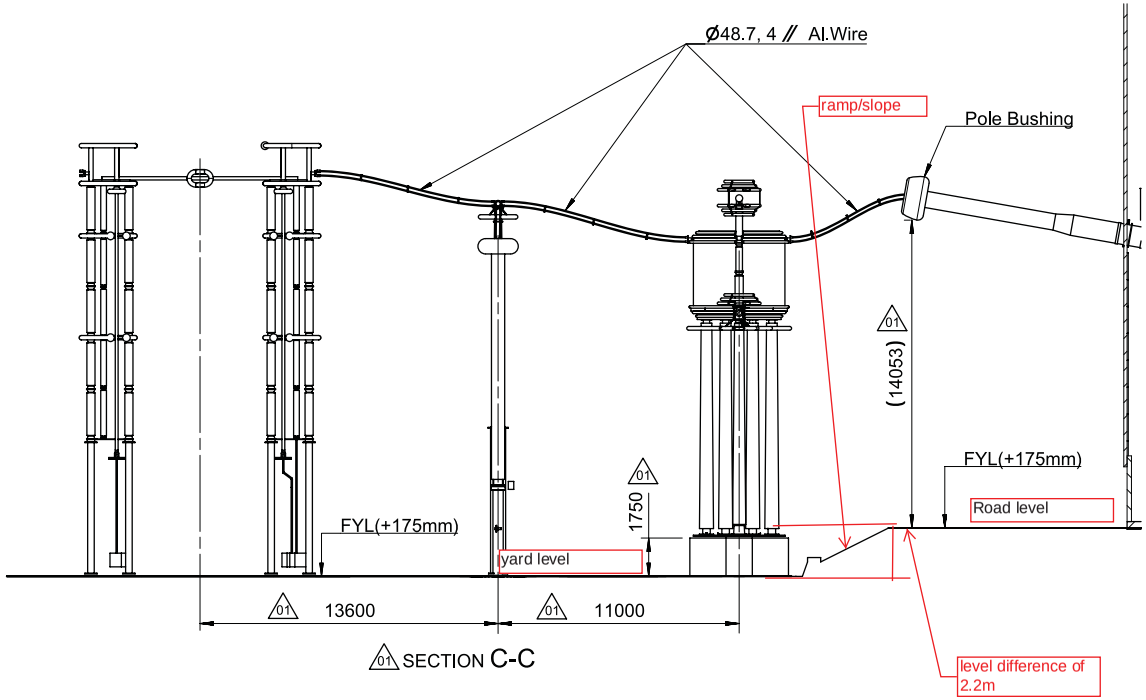

01 SECTION C-C

Rev	Revision	Prepared	Approved	Date
01	Revisions made are marked. Also refer last page for revision notes.	Thiruchunapali, Vijaya, Bhaskar	Naik, Ashish	2018-06-26

Contract No: CC-CS/651-SR2/HVDC-3063/7G10/CA-I/5817-5821 dated 2017-01-25

Client:

POWER GRID CORPORATION OF INDIA LIMITED
(A Government of India Enterprise)

BHARAT HEAVY ELECTRICALS LTD. TRANSMISSION BUSINESS GROUP

Station Name: Pugalur

Classification No.: FJB-64

Based on

Prepared: Thiruchunapali, Vijaya, Bhaskar

Approved: Naik, Ashish 2018-01-23

Doc. Kind: Layout drawing

Project name: ±800kV, 6000MW HVDC Raigarh-Pugalur Terminals

Title: Pole4 Layout & Sections DC Yard

Status: Issued

Resp dept: PGGI/DCHUBTPM

Rev ind: 01

Item designation

Language

ABB AB - HVDC

Document number: 1JNL100485-117

Sheet 5 / 9

We reserve all rights in this document and in the information contained therein. Reproduction, use or disclosure to third parties without express authority is strictly prohibited. © ABB AB, (SE)

This document is issued by means of a computerized system. The digitally stored original is electronically approved. The approved document has a name and approval date instead of a signature. A manual signature is not required.

(A2)

ANNEXURE-J (POLE-4)

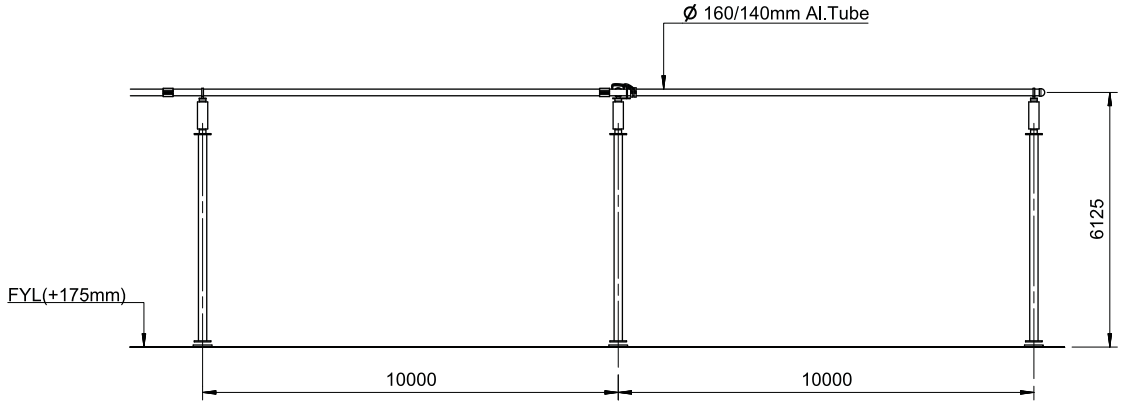

SECTION F-F

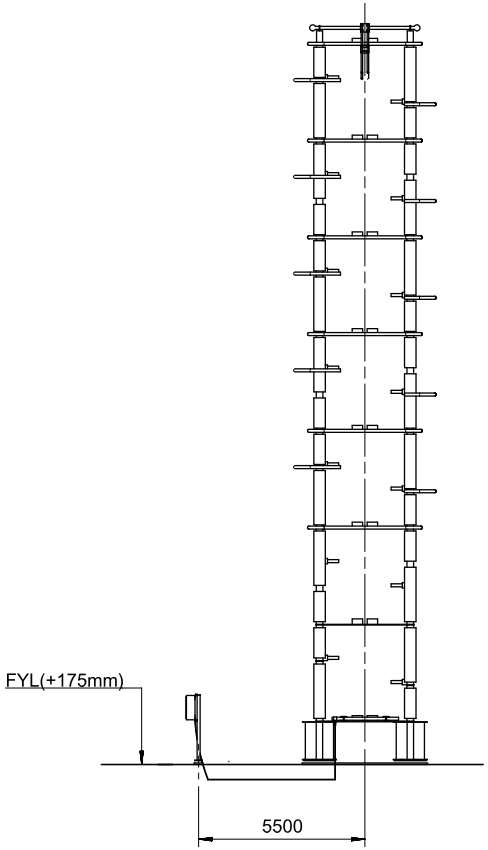

SECTION E-E

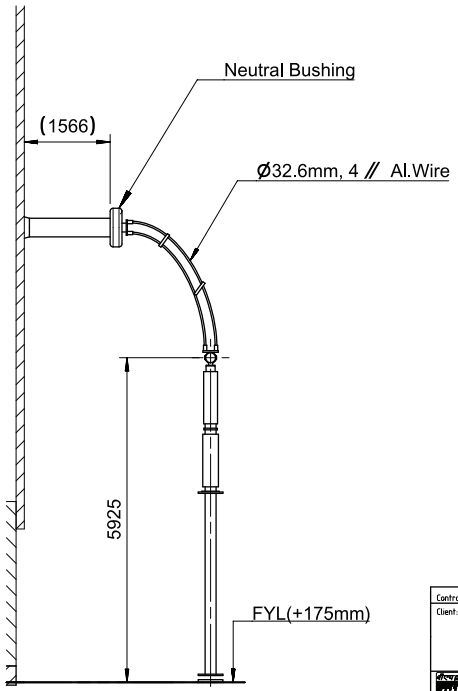

SECTION G-G

Rev	Revision	Prepared	Approved	Date
01	Revisions made are marked. Also refer last page for revision notes.	Thiruchunapali, Vijaya, Bhaskar	Naik, Ashish	2018-06-26

Contract No: CC-CS/651-SR2/HVDC-3063/7G10/CA-I/5817-5821 dated 2017-01-25

Client: POWER GRID CORPORATION OF INDIA LIMITED (A Government of India Enterprise)

BHARAT HEAVY ELECTRICALS LTD. TRANSMISSION BUSINESS GROUP

Station Name: Pugalur

Classification No.: FJB-64

Based on

Prepared: Thiruchunapali, Vijaya, Bhaskar

Approved: Naik, Ashish 2018-01-23

Doc. Kind: Layout drawing

Project name: ±800kV, 6000MW HVDC Raigarh-Pugalur Terminals

Title: Pole4 Layout & Sections DC Yard

Status: Issued

Resp dept: PGGI/DCHUBTPM

Rev ind: 01

Item designation

Language

ABB AB - HVDC

Document number: 1JNL100485-117

Sheet/of 6 / 9

(A2)

We reserve all rights in this document and in the information contained therein. Reproduction, use or disclosure to third parties without express authority is strictly prohibited. © ABB AB, (SE)

This document is issued by means of a computerized system. The digitally stored original is electronically approved. The approved document has a name and a date instead of a handwritten signature. A manual signature is not required.

ANNEXURE-J (POLE-4)

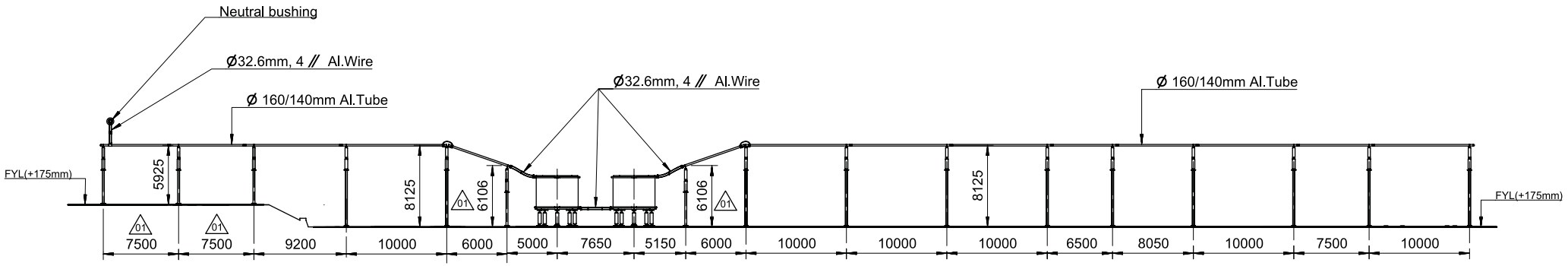

SECTION H-H

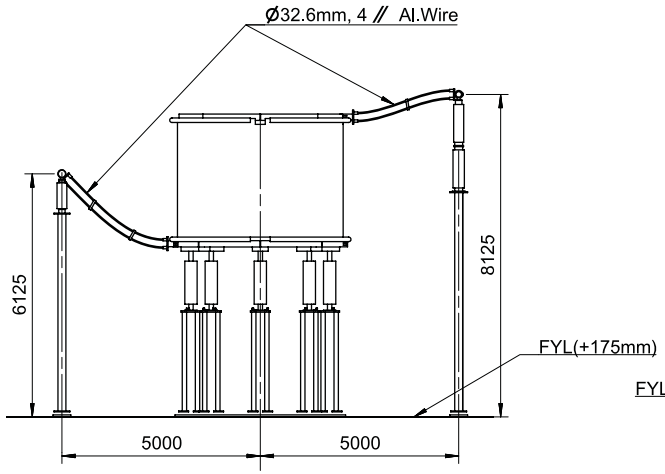

SECTION J-J

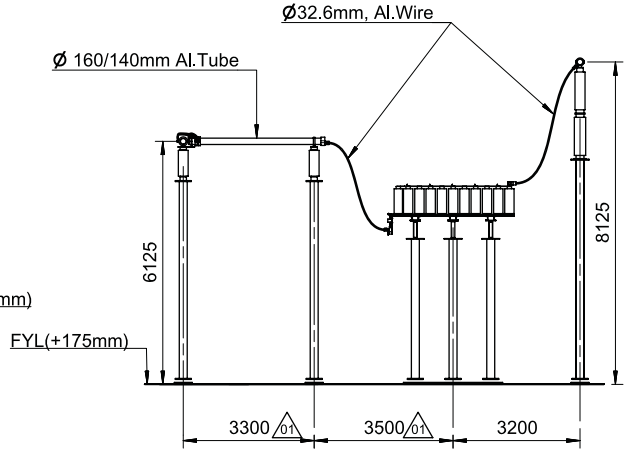

SECTION K-K

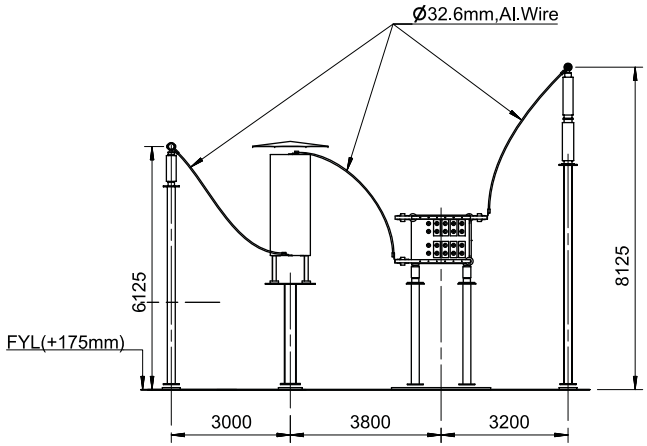

SECTION L-L

Rev	Revision	Prepared	Approved	Date
01	Revisions made are marked. Also refer last page for revision notes.	Thiruchunapali, Vijaya, Bhaskar	Naik, Ashish	2018-06-26

Contract No: CC-CS/651-SR2/HVDC-3063/7G10/CA-I/5817-5821 dated 2017-01-25

Client:

POWER GRID CORPORATION OF INDIA LIMITED
(A Government of India Enterprise)

पावरग्रिड

BHARAT HEAVY ELECTRICALS LTD. TRANSMISSION BUSINESS GROUP

Station Name: Pugalur

Classification No.: FJB-64

Based on

Prepared: Thiruchunapali, Vijaya, Bhaskar

Approved: Naik, Ashish 2018-01-23

Doc. Kind: Layout drawing

Project name: ±800kV, 6000MW HVDC Raigarh-Pugalur Terminals

Title: Pole4 Layout & Sections DC Yard

Status: Issued

Resp dept: PGGI/DCHUBTPM

Rev ind: 01

Item designation

Language

ABB AB - HVDC

Document number: 1JNL100485-117

Sheet/of: 7 / 9

We reserve all rights in this document and in the information contained therein. Reproduction, use or disclosure to third parties without express authority is strictly forbidden. © ABB AB, (SE)

This document is issued by means of a computerized system. The digital stored original is electronically approved. The approved document has a watermark and a signature is not required. A manual signature is not required.

(A2)

ANNEXURE-J (POLE-4)

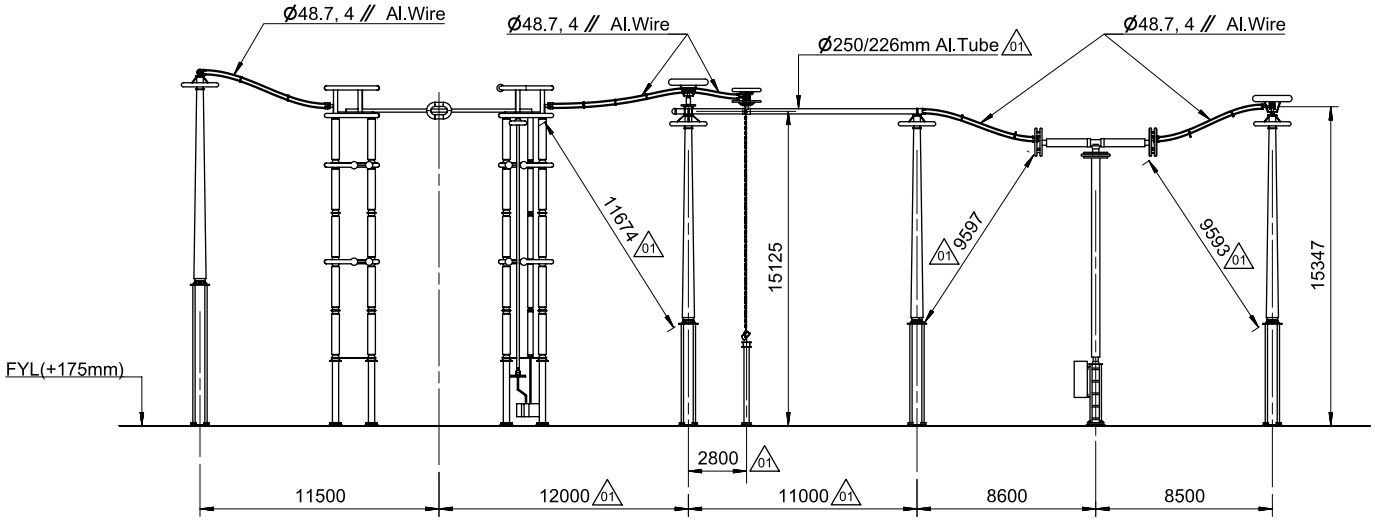

SECTION W-W

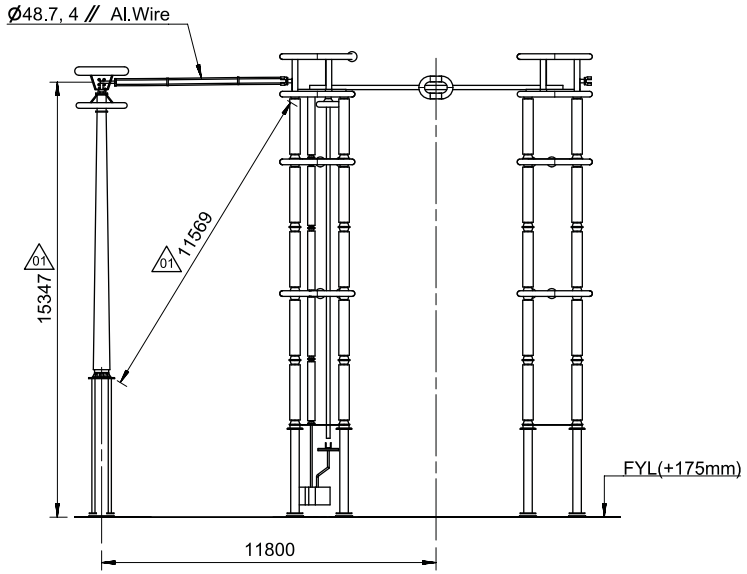

SECTION V-V

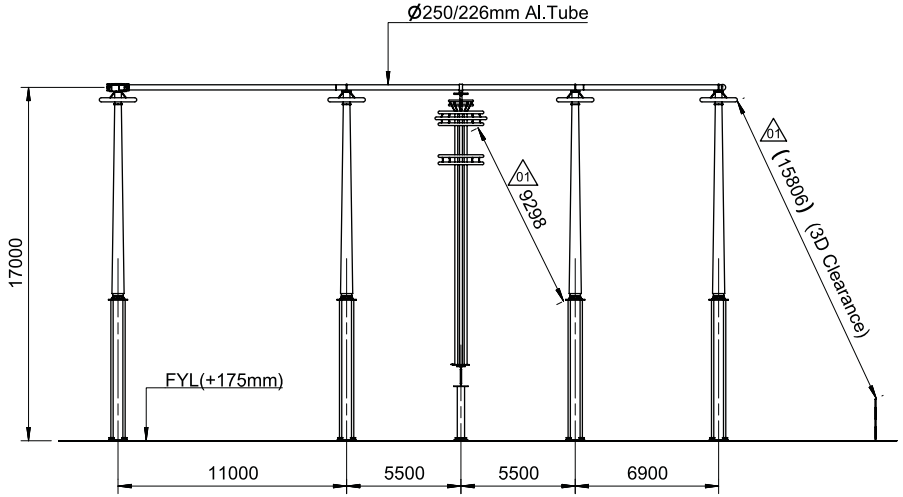

01 SECTION X-X

01	Revisions made are marked. Also refer last page for revision notes.	Thiruchunapali, Vijaya, Bhaskar	Naik, Ashish	2018-06-26
Rev	Revision	Prepared	Approved	Date

Contract No: CC-CS/651-SR2/HVDC-3063/7G10/CA-I/5817-5821 dated 2017-01-25

Client:

POWER GRID CORPORATION OF INDIA LIMITED
(A Government of India Enterprise)

पावरग्रिड

BHARAT HEAVY ELECTRICALS LTD. TRANSMISSION BUSINESS GROUP

Station Name: Pugalur

Classification No.: FJB-64

Based on

Prepared: Thiruchunapali, Vijaya, Bhaskar

Approved: Naik, Ashish 2018-01-23

Doc. Kind: Layout drawing

Project name: ±800kV, 6000MW HVDC Raigarh-Pugalur Terminals

Title: Pole4 Layout & Sections DC Yard

Status: Issued

Resp dept: PGGI/DCHUBTPM

Rev ind: 01

Item designation

Language

ABB AB - HVDC

Document number: 1JNL100485-117

Sheet/of: 8 / 9

We reserve all rights in this document and in the information contained therein. Reproduction, use or disclosure to third parties without express authority is strictly prohibited. © ABB AB (SE)

This document is issued by means of a computerized system. The digitally stored original is electronically approved. The approved document has a name and date-stamp. The approved document is a name and date-stamped PDF-file. A manual signature is not required.

(A2)

ANNEXURE-J (POLE-4)

Revision History :

Revision No.	Date	Sheet No.	Revision Note
01	26-06-2018	Sheet 1	Notes updated
			Reference documents updated
		Sheet 2	Dimensions updated
			Equipment north east coordinate added
			Road size updated
		Sheet 4	Dimensions updated
		Sheet 5	Dimensions updated
			Tube size updated
			Section D-D view updated to show sectional clearance to DC Filter fence
		Sheet 7	Dimensions updated
		Sheet 8	Tube size updated
			Dimensions updated
			Section X-X view updated and sectional clearance to DC Filter fence shown

We reserve all rights in this document and in the information contained therein. Reproduction, use or disclosure to third parties without express authority is strictly forbidden. © ABB AB, 2018

This document is issued by means of a computerized system. The digitally stored original is electronically approved. The approved document has a name and approval date in the computer system. A manual signature is not required.

Rev	Revision	Prepared	Approved	Date
01	Revisions made are marked. Also refer last page for revision notes.	Thiruchunapali, Vijaya, Bhaskar	Naik, Ashish	2018-06-26

Contract No: CC-CS/651-SR2/HVDC-3063/7G10/CA-I/5817-5821 dated 2017-01-25

Client: POWER GRID CORPORATION OF INDIA LIMITED (A Government of India Enterprise)

BHARAT HEAVY ELECTRICALS LTD. TRANSMISSION BUSINESS GROUP

Station Name: Pugalur

Classification No.: FJB-64

Based on: -

Prepared: Thiruchunapali, Vijaya, Bhaskar 2018-01-12

Approved: Naik, Ashish 2018-01-23

Doc. Kind: Layout drawing

Project name: ±800kV, 6000MW HVDC Raigarh-Pugalur Terminals

Title: Pole4 Layout & Sections DC Yard

Status: Issued

Item designation: -

Resp dept: PGGI/DCHUBTPM

Rev ind: 01

Language: -

ABB AB - HVDC

Document number: 1JNL100485-117

Sheet 1 of 9 / 9

(A2)

ANNEXURE-K

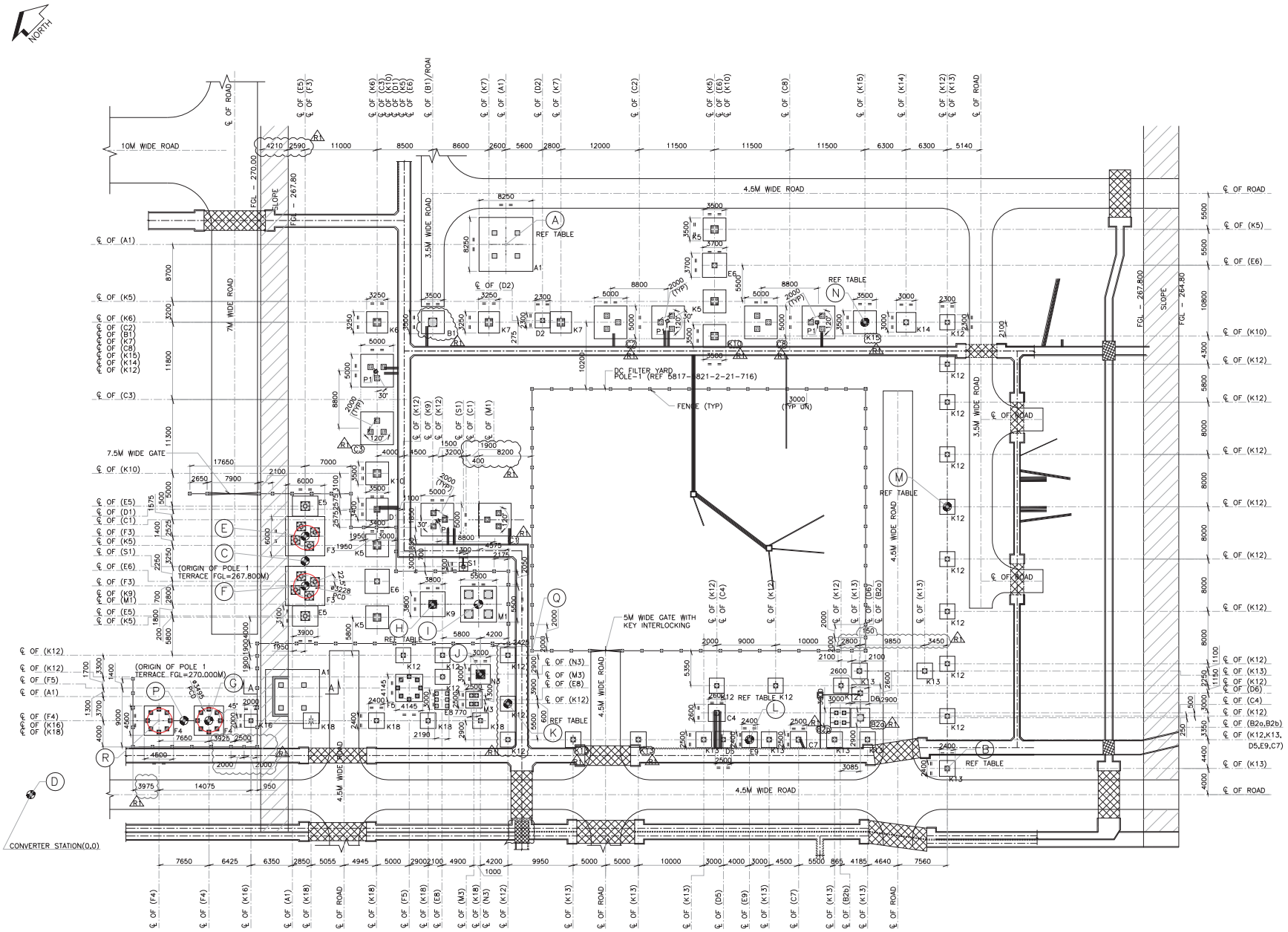

FOUNDATION LAYOUT OF DC YARD POLE-1

(FOR SECTION A-A REFER DWG NO. 5817-5821-2-21-720 (SH 02 OF 03)
1:300

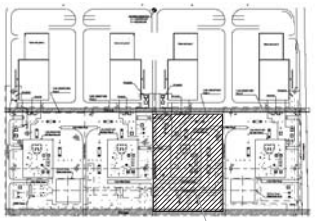

KEY PLAN

LEGEND

A ---- TOWERS
B ---- BREAKERS
C ---- DISCONNECTOR/GROUNDING SWITCH
D ---- CURRENT TRANSFORMER
E ---- ARRESTER
F ---- REACTOR
K ---- POST INSULATOR
M ---- CAPACITOR
N ---- RESISTOR
S ---- JUNCTION BOX
℄ ---- CENTER LINE

NOTES:

1. ALL DIMENSIONS ARE INDICATED IN MILLIMETERS AND LEVELS ARE IN METERS.
2. DRAWINGS SHALL NOT BE SCALED. ONLY WRITTEN DIMENSIONS SHALL BE FOLLOWED.
3. ANY DOUBT OR DISCREPANCY IN THIS DRAWING SHALL BE BROUGHT TO THE NOTICE OF ENGINEER-IN-CHARGE BEFORE STARTING THE WORK.
4. GRADE OF CONCRETE SHALL BE AS FOLLOWS UNO.
   a) FOR RCC WORKS - M25
   b) FOR PCC WORKS - 1:2:4
5. ALL REINFORCEMENT SHALL BE HIGH YIELD STRENGTH DEFORMED BAR OF GRADE Fe500 CONFIRMING TO IS: 1786.
6. DEVELOPMENT LENGTH SHALL BE 50 TIMES THE DIA OF BAR, LAP LENGTH SHALL BE 50 TIMES THE SMALLER DIA LAPPED.
7. LAPS SHALL BE STAGGERED AS PER IS-456-2000. NOT MORE THAN 50% OF BARS SHALL BE LAPPED AT A SECTION.
8. FGL (±) 0.000 CORRESPONDS TO RL 267.8/270.0
9. FOR CO-ORDINATES REFER DWG NO. 5817-5821-2-21-720 (SH 02 OF 03)

ENGINEERING REFERENCE DRAWINGS

1. RP800 PUGALUR OGA ----------1JNL100336-120 REV 12
2. FOUNDATION PLAN OVERVIEW DC YARD ---1JNL100485-230 REV 0
3. FOUNDATION PLAN - P1 DC YARD -----1JNL100484-560 REV 0

CONSTRUCTION REFERENCE DRAWINGS

1. STANDARD DRAWING FOR CONCRETE WORKS---5817-5821-2-00-002
2. STANDARD REINFORCEMENT DETAILS--------5817-5821-2-00-007
3. PUGALUR CONVERTER STATION DRAIN LAYOUT---5817-5821-2-14-001
4. PUGALUR CONVERTER STATION OVERALL OUTDOOR CABLE TRENCH LAYOUT----------5817-5821-2-22-001
5. PUGALUR CONVERTER STATION ROAD LAYOUT---5817-5821-2-11-010
6. PUGALUR CONVERTER STATION STANDARD LAYOUT AND DETAILS OF CHAINLINK FENCE---5817-5821-2-00-012

FOR APPROVAL

POWER GRID CORPORATION OF INDIA LIMITED
(A government of India Enterprise)

±800 kV 6000 MW RAIGARH - PUGALUR HVDC Terminal

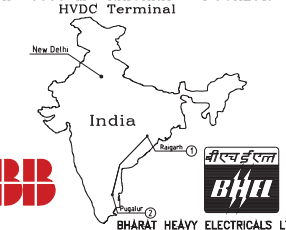

BHARAT HEAVY ELECTRICALS LTD.
TRANSMISSION BUSINESS GROUP

Civil and Building Works incl EL and Mech. Services.

ABB'S CONSULTANT
TATA Consulting Engineers Limited
Bangalore.

PUGALUR
CONVERTER STATION
DC YARD POLE - 1
OVERALL FOUNDATION LAYOUT
SHEET 01 OF 03

Rev #	Revision	Year/Month/Day	Appd.
R2	NBS FENCE ADDED	22-03-2020	SP
R1	REVISED AS MARKED	12-10-2018	SP
R0	ISSUED FOR APPROVAL	21-05-2018	SP

Date	Drawn by	Checked by	Scale (A1-Print)	Drawing No.	Rev
27-03-2020	MDGM	TS	AS NOTED	5817-5821-2-21-720	R2

We reserve all rights in this document and in the information contained there in Reproduction or disclosure to third parties without express authority is strictly forbidden ©ABB

0 50 100 mm
THIS MEASUREMENT IS 100 mm ON ORIGINAL DRAWING
IF NOT 100 mm ON THIS COPY, ADJUST SCALES ACCORDINGLY

"R" (PRELIMINARY) ISSUES ARE NOT TO BE USED FOR CONSTRUCTION PURPOSES BUT ARE ISSUED FOR VARIOUS PURPOSES AS MENTIONED IN "R" ISSUE. FOR ISSUE TYPE, REFER TO THE TITLE BLOCK.

CONSTRUCTION / FABRICATION WORK IS PERMITTED ON "R" (PRELIMINARY) ISSUES ONLY.

INFORMATION CONTAINED BEYOND "HOLD" IS NOT VALID FOR CONSTRUCTION / FABRICATION PURPOSES. ANY DAMAGE OR LOSS DUE TO CONSTRUCTION/FABRICATION WORK RELATED TO "HOLD".

ANNEXURE-K

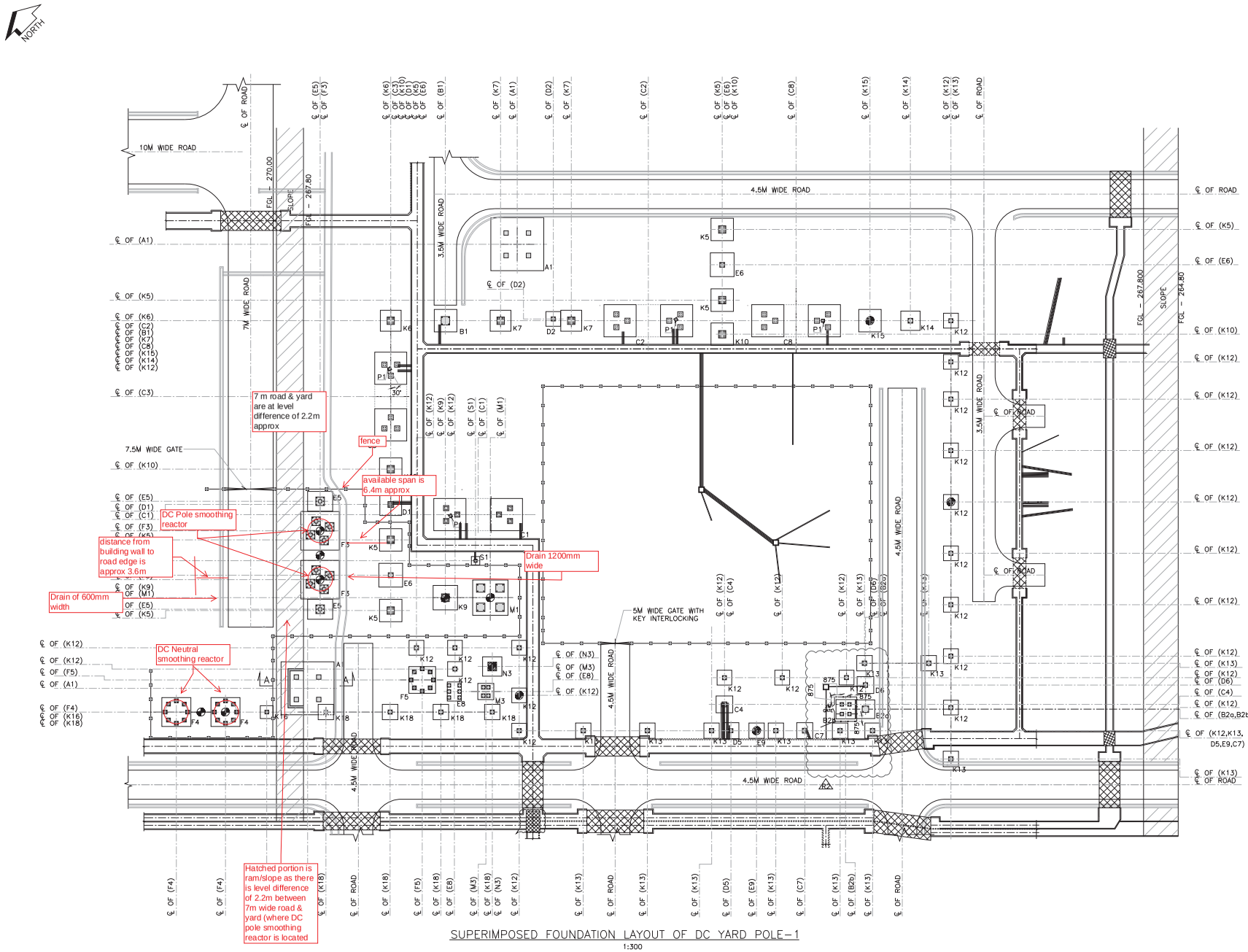

SUPERIMPOSED FOUNDATION LAYOUT OF DC YARD POLE-1

1:300

LEGEND

REFER DWG NO. 5817-5821-2-21-720 SHEET 1 OF 3

NOTES:

REFER DWG NO. 5817-5821-2-21-720 SHEET 1 OF 3

ENGINEERING REFERENCE DRAWINGS

REFER DWG NO. 5817-5821-2-21-720 SHEET 1 OF 3

CONSTRUCTION REFERENCE DRAWINGS

REFER DWG NO. 5817-5821-2-21-720 SHEET 1 OF 3

FOR APPROVAL

POWER GRID CORPORATION OF INDIA LIMITED
(A government of India Enterprise)

±800 kV 6000 MW RAIGARH – PUGALUR HVDC Terminal

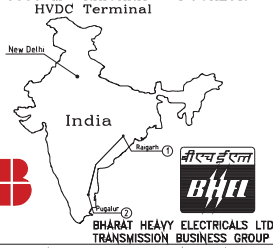

ABB

BHARAT HEAVY ELECTRICALS LTD.
TRANSMISSION BUSINESS GROUP

Civil and Building Works incl EL and Mech. Services.

ABB'S CONSULTANT
TATA Consulting Engineers Limited
Bangalore.

PUGALUR
CONVERTER STATION
DC YARD POLE - 1
OVERALL FOUNDATION LAYOUT
SHEET 03 OF 03

Rev #	Revision	Year/Month/Day	Appd.
R2	NBS FENCE ADDED	27-03-2020	SP
R1	REVISED AS MARKED	12-10-2018	SP
R0	ISSUED FOR APPROVAL	21-05-2018	SP

Date	Drawn by	Checked by	Scale (A1-Print)	Drawing No.	Rev
27-03-2020	MDGM	TS	AS NOTED	5817-5821-2-21-720	R2

We reserve all rights in this document and in the information contained there in Reproduction or disclosure to third parties without express authority is strictly forbidden©ABB

0 50 100 mm

THIS MEASUREMENT IS 100 mm ON ORIGINAL DRAWING IF NOT 100 mm ON THIS COPY, ADJUST SCALES ACCORDINGLY

"A" (PRELIMINARY) ISSUES ARE NOT TO BE USED FOR CONSTRUCTION PURPOSES BUT ARE ISSUED FOR LIMITED PURPOSES SUCH AS ESTIMATING, PRICE ENQUIRIES, ETC. "B" OR HIGHER ISSUES SHALL CARRY A SET OF CONSTRUCTION DRAWINGS

CONSTRUCTION / FABRICATION WORK IS PERMITTED ON "B" (RELEASED) ISSUES ONLY.

INFORMATION CONTAINED BEYOND "HOLD" IS NOT RELEASED FOR CONSTRUCTION / FABRICATION. "HOLD" SHOT DATE MEANS THE DATE BEYOND WHICH WORK BY CONSTRUCTION/FABRICATION WORK RELATED TO THESE

ANNEXURE-K

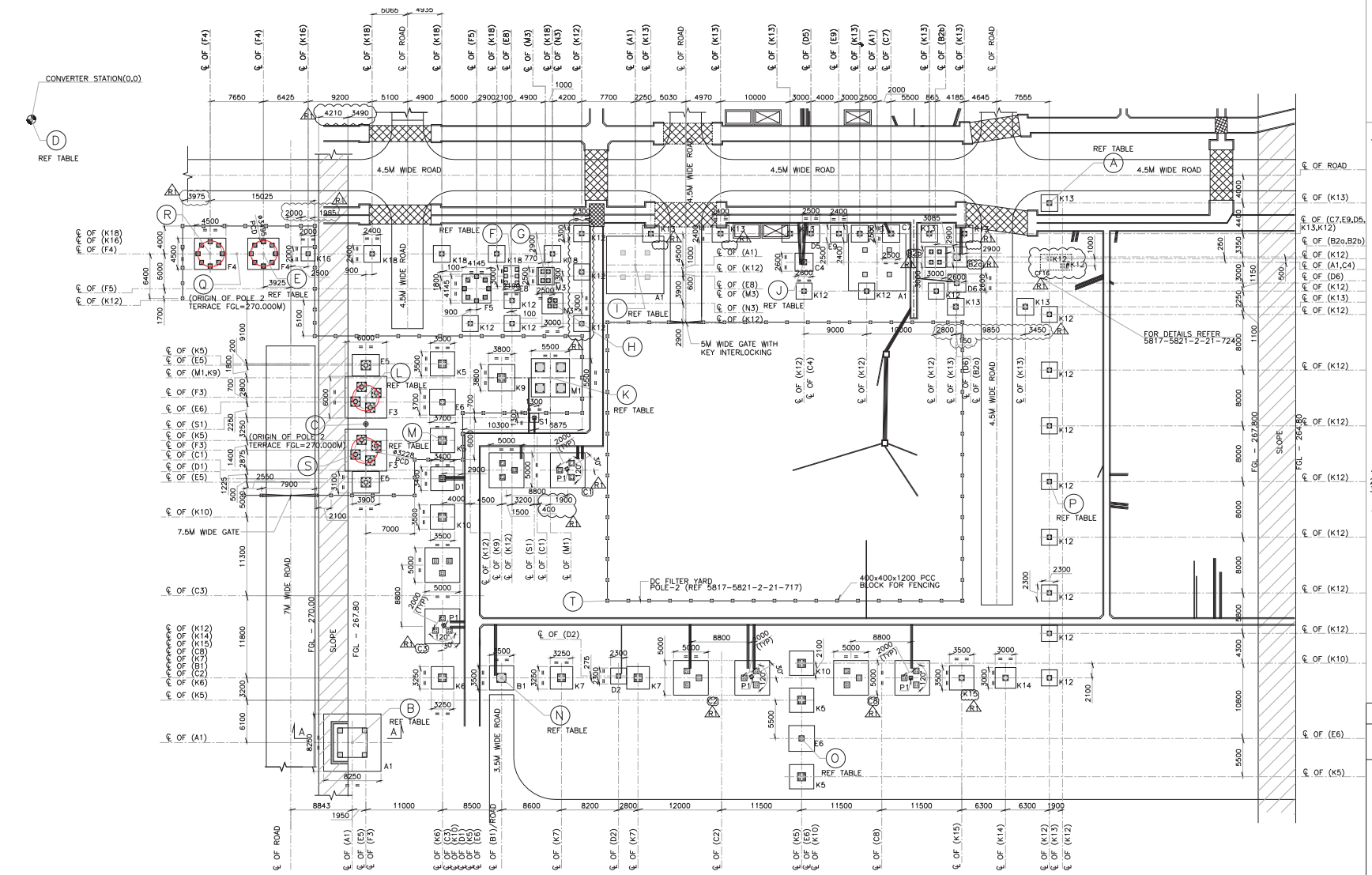

FOUNDATION LAYOUT OF DC YARD POLE-2

(FOR SECTION A-A REFER DWG NO. 5817-5821-2-21-721 (SH 02 OF 03)
(#K12 BELONGS TO COMMON AREA, FOR DETAILS OF CF16 FOUNDATIONS REFER DWG NO: 5817-5821-2-21-724, SHEET 02 OF 04)

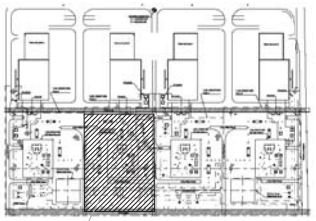

KEY PLAN

LEGEND

A ---- TOWERS
B ---- BREAKERS
C ---- DISCONNECTOR/GROUNDING SWITCH
D ---- CURRENT TRANSFORMER
E ---- ARRESTER
F ---- REACTOR
K ---- POST INSULATOR
M ---- CAPACITOR
N ---- RESISTOR
S ---- JUNCTION BOX
℄ ---- CENTER LINE

NOTES:

1. ALL DIMENSIONS ARE INDICATED IN MILLIMETERS AND LEVELS ARE IN METERS.
2. DRAWINGS SHALL NOT BE SCALED. ONLY WRITTEN DIMENSIONS SHALL BE FOLLOWED.
3. ANY DOUBT OR DISCREPANCY IN THIS DRAWING SHALL BE BROUGHT TO THE NOTICE OF ENGINEER-IN-CHARGE BEFORE STARTING THE WORK.
4. GRADE OF CONCRETE SHALL BE AS FOLLOWS UNO.
   a) FOR RCC WORKS - M25
   b) FOR PCC WORKS - 1:2:4
5. ALL REINFORCEMENT SHALL BE HIGH YIELD STRENGTH DEFORMED BAR OF GRADE Fe500 CONFIRMING TO IS: 1786.
6. DEVELOPMENT LENGTH SHALL BE 50 TIMES THE DIA OF BAR, LAP LENGTH SHALL BE 50 TIMES THE SMALLER DIA LAPPED.
7. LAPS SHALL BE STAGGERED AS PER IS-456-2000. NOT MORE THAN 50% OF BARS SHALL BE LAPPED AT A SECTION.
8. FGL (±) 0.000 CORRESPONDS TO RL 267.8/270.0
9. FOR CO-ORDINATES REFER DWG NO. 5817-5821-2-21-721 (SH 02 OF 03)

ENGINEERING REFERENCE DRAWINGS

1. RP800 PUGALUR OGA ----------1JNL100336-120 REV 12
2. FOUNDATION PLAN OVERVIEW DC YARD ---1JNL100485-230 REV 0
3. FOUNDATION PLAN - P2 DC YARD -----1JNL100484-564 REV 0

CONSTRUCTION REFERENCE DRAWINGS

1. STANDARD DRAWING FOR CONCRETE WORKS--5817-5821-2-00-002
2. STANDARD REINFORCEMENT DETAILS--------5817-5821-2-00-007
3. PUGALUR CONVERTER STATION DRAIN LAYOUT--5817-5821-2-14-001
4. PUGALUR CONVERTER STATION OVERALL OUTDOOR CABLE TRENCH LAYOUT----------5817-5821-2-22-001
5. PUGALUR CONVERTER STATION ROAD LAYOUT--5817-5821-2-11-010
6. PUGALUR CONVERTER STATION STANDARD LAYOUT AND DETAILS OF CHAINLINK FENCE---5817-5821-2-00-012

FOR APPROVAL

POWER GRID CORPORATION OF INDIA LIMITED
(A government of India Enterprise)

±800 kV 6000 MW RAIGARH - PUGALUR HVDC Terminal

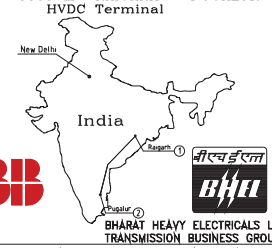

ABB

BHARAT HEAVY ELECTRICALS LTD.
TRANSMISSION BUSINESS GROUP

Civil and Building Works incl EL and Mech. Services.

ABB'S CONSULTANT
TATA Consulting Engineers Limited
Bangalore.

PUGALUR
CONVERTER STATION
DC YARD POLE - 2
OVERALL FOUNDATION LAYOUT
SHEET 01 OF 03

Rev #	Revision	Year/Month/Day	Appd.
R2	NBS FENCE ADDED	27-03-2020	SP
R1	REVISED AS MARKED	12-10-2018	SP
R0	ISSUED FOR APPROVAL	21-05-2018	SP

Date	Drawn by	Checked by	Scale (A1-Print)	Drawing No.	Rev
27-03-2020	MDGM	TS	AS NOTED	5817-5821-2-21-721	R2

We reserve all rights in this document and in the information contained there in Reproduction or disclosure to third parties without express authority is strictly forbidden ©ABB

0 50 100 mm
THIS MEASUREMENT IS 100 mm ON ORIGINAL DRAWING IF NOT 100 mm ON THIS COPY, ADJUST SCALES ACCORDINGLY

"R" (PRELIMINARY) ISSUES ARE NOT TO BE USED FOR CONSTRUCTION PURPOSES BUT ARE ISSUED FOR LIMITED PURPOSES (E.G. FOR COMMENTS, ESTIMATES, ETC.) OR FOR ISSUE TO THIRD PARTIES (E.G. THE ENGINEER).

CONSTRUCTION / FABRICATION WORK IS PERMITTED ON "0" (PRELIMINARY) ISSUES ONLY.

INFORMATION CONTAINED HEREIN "HOLD" IN ABSENCE OF ANY CONFIRMATION FAMILIARISATION WITH THE SUBJECT DATA SHEET, SPECIFICATION AND ALL OTHER RELEVANT DOCUMENTS. ABSENCE OF ANY CONFIRMATION/FAMILIARISATION WORK RELATED TO THIS ISSUE.

ANNEXURE-K

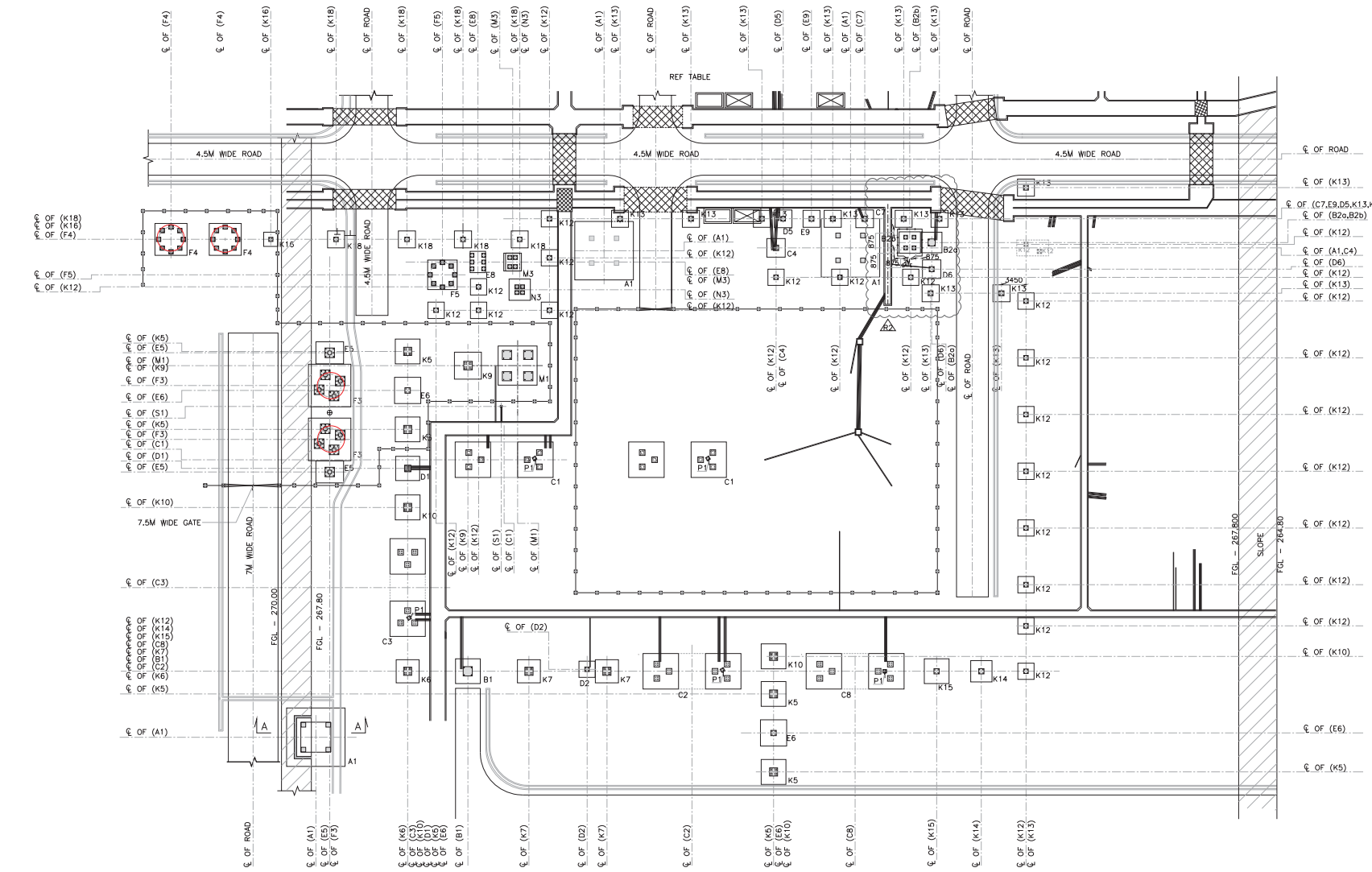

SUPERIMPOSED FOUNDATION LAYOUT OF DC YARD POLE-2

1:300

LEGEND

REFER DRAWING NO. 5817-5821-2-21-721 SHEET 1 OF 3

NOTES:

REFER DRAWING NO. 5817-5821-2-21-721 SHEET 1 OF 3

ENGINEERING REFERENCE DRAWINGS

REFER DRAWING NO. 5817-5821-2-21-721 SHEET 1 OF 3

CONSTRUCTION REFERENCE DRAWINGS

REFER DRAWING NO. 5817-5821-2-21-721 SHEET 1 OF 3

FOR APPROVAL

POWER GRID CORPORATION OF INDIA LIMITED
(A government of India Enterprise)

±800 kV 6000 MW RAIGARH – PUGALUR HVDC Terminal

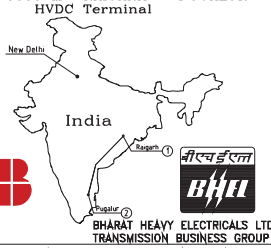

BHARAT HEAVY ELECTRICALS LTD.
TRANSMISSION BUSINESS GROUP

Civil and Building Works incl EL and Mech. Services.

ABB'S CONSULTANT
TATA Consulting Engineers Limited
Bangalore.

PUGALUR
CONVERTER STATION
DC YARD POLE - 2
OVERALL FOUNDATION LAYOUT
SHEET 03 OF 03

Rev #	Revision	Year/Month/Day	Appd.
R2	NBS FENCE ADDED	27-03-2020	SP
R1	REVISED AS MARKED	12-10-2018	SP
R0	ISSUED FOR APPROVAL	21-05-2018	SP

Date	Drawn by	Checked by	Scale (A1-Print)	Drawing No.	Rev
27-03-2020	MDGM	TS	AS NOTED	5817-5821-2-21-721	R2

We reserve all rights in this document and in the information contained there in Reproduction or disclosure to third parties without express authority is strictly forbidden ©ABB

0 50 100 mm

THIS MEASUREMENT IS 100 mm ON ORIGINAL DRAWING
IF NOT 100 mm ON THIS COPY, ADJUST SCALES ACCORDINGLY

"A" (PRELIMINARY) ISSUES ARE NOT TO BE USED FOR CONSTRUCTION / FABRICATION BUT ARE ISSUED FOR LATEST INFORMATION ONLY. ONLY "B" (CONSTRUCTION) SERIES OR "C" OR HIGHER SERIES ISSUES CARRIED OUT THE TITLE BLOCK.

CONSTRUCTION / FABRICATION WORK IS PERMITTED ON "B" (PRELIMINARY) ISSUES ONLY.

INFORMATION CONTAINED HEREIN "HOLDS" IN THE DELIVERABLES FOR CONSTRUCTION / FABRICATION PURPOSE ONLY. ANY DATA / DETAILS NOT CONTAINED HEREIN "HOLD" BY DEFINITION, ARE NOT TO BE USED FOR CONSTRUCTION/FABRICATION WORK RELATED TO THEIRS.

ANNEXURE-K

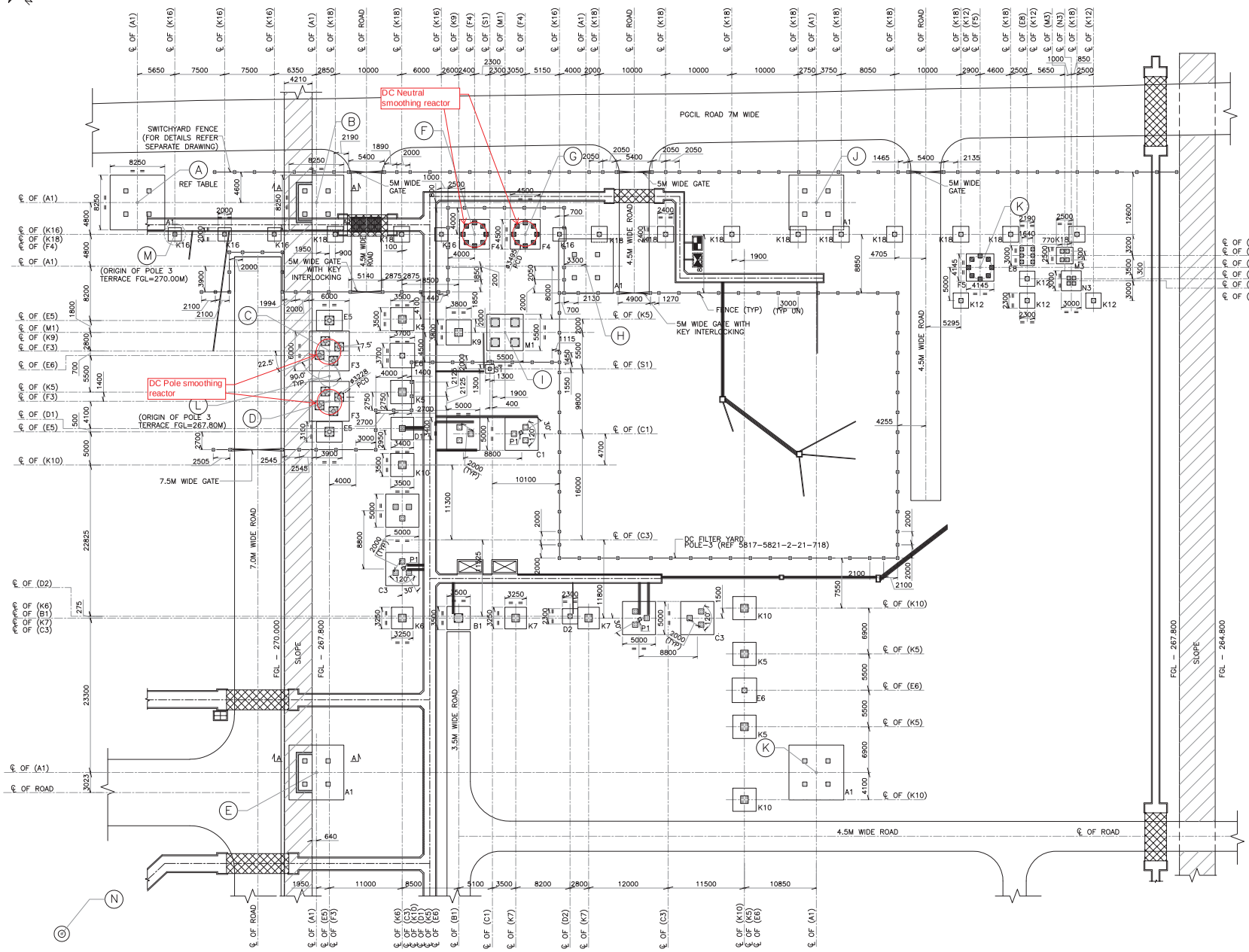

FOUNDATION LAYOUT OF DC YARD POLE-3
(FOR SECTION A-A REFER DWG NO. 5817-5821-2-21-722 (SH 02 OF 03)
1:300

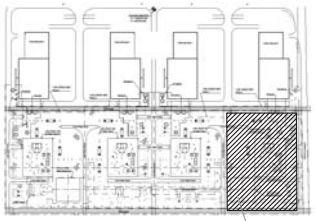

KEY PLAN

LEGEND

A ---- TOWERS
B ---- BREAKERS
C ---- DISCONNECTOR/GROUNDING SWITCH
D ---- CURRENT TRANSFORMER
E ---- ARRESTER
F ---- REACTOR
K ---- POST INSULATOR
M ---- CAPACITOR
N ---- RESISTOR
S ---- JUNCTION BOX
℄ ---- CENTER LINE

NOTES:

1. ALL DIMENSIONS ARE INDICATED IN MILLIMETERS AND LEVELS ARE IN METERS.
2. DRAWINGS SHALL NOT BE SCALED. ONLY WRITTEN DIMENSIONS SHALL BE FOLLOWED.
3. ANY DOUBT OR DISCREPANCY IN THIS DRAWING SHALL BE BROUGHT TO THE NOTICE OF ENGINEER-IN-CHARGE BEFORE STARTING THE WORK.
4. GRADE OF CONCRETE SHALL BE AS FOLLOWS UNO.
   a) FOR RCC WORKS - M25
   b) FOR PCC WORKS - 1:2:4
5. ALL REINFORCEMENT SHALL BE HIGH YIELD STRENGTH DEFORMED BAR OF GRADE Fe500 CONFIRMING TO IS: 1786.
6. DEVELOPMENT LENGTH SHALL BE 50 TIMES THE DIA OF BAR, LAP LENGTH SHALL BE 50 TIMES THE SMALLER DIA LAPPED.
7. LAPS SHALL BE STAGGERED AS PER IS-456-2000. NOT MORE THAN 50% OF BARS SHALL BE LAPPED AT A SECTION.
8. FGL (±) 0.000 CORRESPONDS TO RL 267.8/270.0
9. FOR CO-ORDINATES REFER DWG NO. 5817-5821-2-21-722 (SH 02 OF 03)

ENGINEERING REFERENCE DRAWINGS

1. RP800 PUGALUR OGA ----------1JNL100336-120 REV 12
2. POLE-3 LAYOUT AND SECTIONS DC YARD ---1JNL100484-566 REV 0
3. LAYOUT AND SECTIONS OVERVIEW DC YARD --1JNL100485-230 REV 0

CONSTRUCTION REFERENCE DRAWINGS

1. STANDARD DRAWING FOR CONCRETE WORKS--5817-5821-2-00-002
2. STANDARD REINFORCEMENT DETAILS-------5817-5821-2-00-007
3. PUGALUR CONVERTER STATION DRAIN LAYOUT--5817-5821-2-14-001
4. PUGALUR CONVERTER STATION OVERALL OUTDOOR CABLE TRENCH LAYOUT----------5817-5821-2-22-001
5. PUGALUR CONVERTER STATION ROAD LAYOUT--5817-5821-2-11-010
6. PUGALUR CONVERTER STATION STANDARD LAYOUT AND DETAILS OF CHAINLINK FENCE---5817-5821-2-00-012

FOR APPROVAL

POWER GRID CORPORATION OF INDIA LIMITED
(A government of India Enterprise)

±800 kV 6000 MW RAIGARH – PUGALUR HVDC Terminal

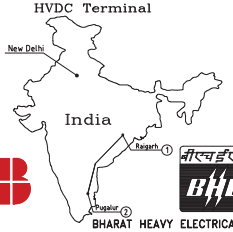

BHARAT HEAVY ELECTRICALS LTD.
TRANSMISSION BUSINESS GROUP

Civil and Building Works incl EL and Mech. Services.

ABB'S CONSULTANT
TATA Consulting Engineers Limited
Bangalore.

PUGALUR
CONVERTER STATION
DC YARD POLE - 3
OVERALL FOUNDATION LAYOUT
(SHEET 01 OF 03)

Rev #	Revision	Year/Month/Day	Appd.	Date	Drawn by	Checked by	Scale (A1-Print)	Drawing No.	Rev
R0	ISSUED FOR APPROVAL	22-08-2018	SP	22-08-2018	MDGM	TS	AS NOTED	5817-5821-2-21-722	R0

We reserve all rights in this document and in the information contained there in Reproduction or disclosure to third parties without express authority is strictly forbidden © ABB

0 50 100 mm
THIS MEASUREMENT IS 100 mm ON ORIGINAL DRAWING IF NOT 100 mm ON THIS COPY, ADJUST SCALES ACCORDINGLY.

"A" (PRELIMINARY) ISSUED AS NOT TO BE USED FOR CONSTRUCTION PURPOSES UNTIL ISSUED FOR "GOOD FOR CONSTRUCTION" STAMP IN THE TITLE BLOCK.

CONSTRUCTION / FABRICATION WORK IS CARRIED OUT BY ENGINEERS ISSUED ONLY.

INFORMATION CONTAINED HEREIN "GOOD FOR CONSTRUCTION" STAMP IN THE TITLE BLOCK, MUST BE ADHERED TO STRICTLY WHILE CARRYING OUT CONSTRUCTION/FABRICATION WORK RELATED TO THIS.

ANNEXURE-K

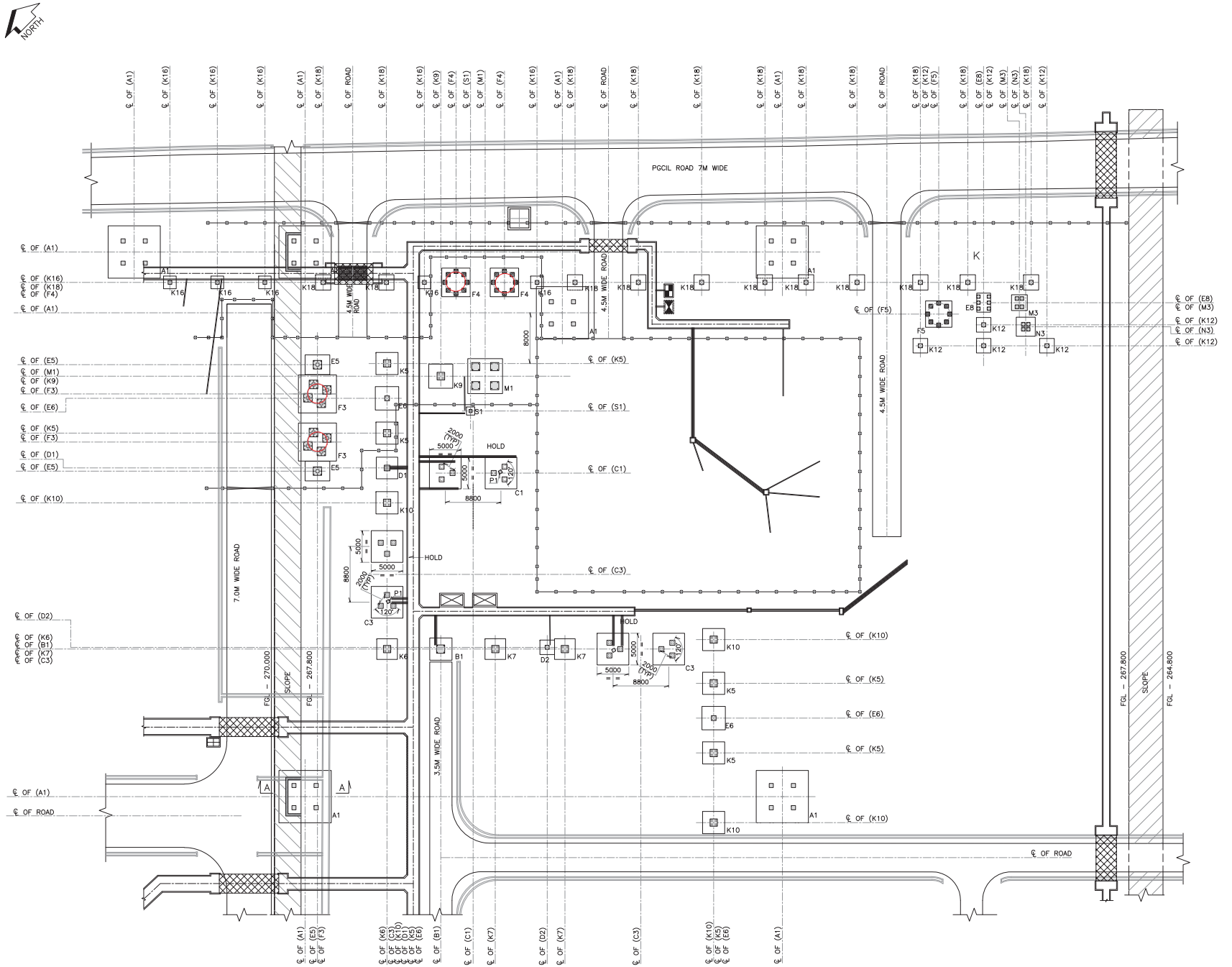

FOUNDATION LAYOUT OF DC YARD POLE-3 SUPERIMPOSED WITH DRAIN AND CABLE TRENCH

LEGEND

REFER DWG NO. 5817-5821-2-21-722 SHEET 1 OF 3

NOTES:

REFER DWG NO. 5817-5821-2-21-722 SHEET 1 OF 3

ENGINEERING REFERENCE DRAWINGS

REFER DWG NO. 5817-5821-2-21-722 SHEET 1 OF 3

CONSTRUCTION REFERENCE DRAWINGS

REFER DWG NO. 5817-5821-2-21-722 SHEET 1 OF 3

FOR APPROVAL

POWER GRID CORPORATION OF INDIA LIMITED
(A government of India Enterprise)

±800 kV 6000 MW RAIGARH – PUGALUR HVDC Terminal

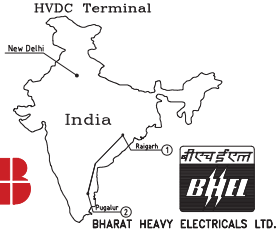

BHARAT HEAVY ELECTRICALS LTD.
TRANSMISSION BUSINESS GROUP

Civil and Building Works incl EL and Mech. Services.

ABB'S CONSULTANT
TATA Consulting Engineers Limited
Bangalore.

PUGALUR
CONVERTER STATION
DC YARD POLE - 3
OVERALL FOUNDATION LAYOUT
(SHEET 03 OF 03)

Rev #	Revision	Year/Month/Day	Appd.
R0	ISSUED FOR APPROVAL	22-08-2018	SP

Date	Drawn by	Checked by	Scale (A1-Print)	Drawing No.	Rev
22-08-2018	MDGM	TS	AS NOTED	5817-5821-2-21-722	R0

We reserve all rights in this document and in the information contained there in Reproduction or disclosure to third parties without express authority is strictly forbidden ©ABB

0 50 100 mm
THIS MEASUREMENT IS 100 mm ON ORIGINAL DRAWING IF NOT 100 mm ON THIS COPY, ADJUST SCALES ACCORDINGLY.

"A" DRAWINGS ISSUED ARE NOT TO BE USED FOR CONSTRUCTION. DRAWINGS ARE ISSUED FOR "GOOD FOR" PURPOSES SUCH AS ENGINEERING, SITE PREPARATION, FOR ISSUE TO THE SITE, BIDDING, ETC.

CONSTRUCTION / FABRICATION WORK IS ACTIVATED ON "E" (ENGINEERING) ISSUES ONLY.

INFORMATION CONTAINED "FOR INFO" IS AS BUILT INFORMATION. ALL DIMENSIONS, PROCESS, PLANT, SUPPORT, EQUIPMENT, PIPING, ELECTRICAL, INSTRUMENTATION, ARCHITECTURAL, CIVIL, STRUCTURAL, ETC. ARE FOR CONSTRUCTION/FABRICATION WORK RELATED TO "FOR INFO".

ANNEXURE-K

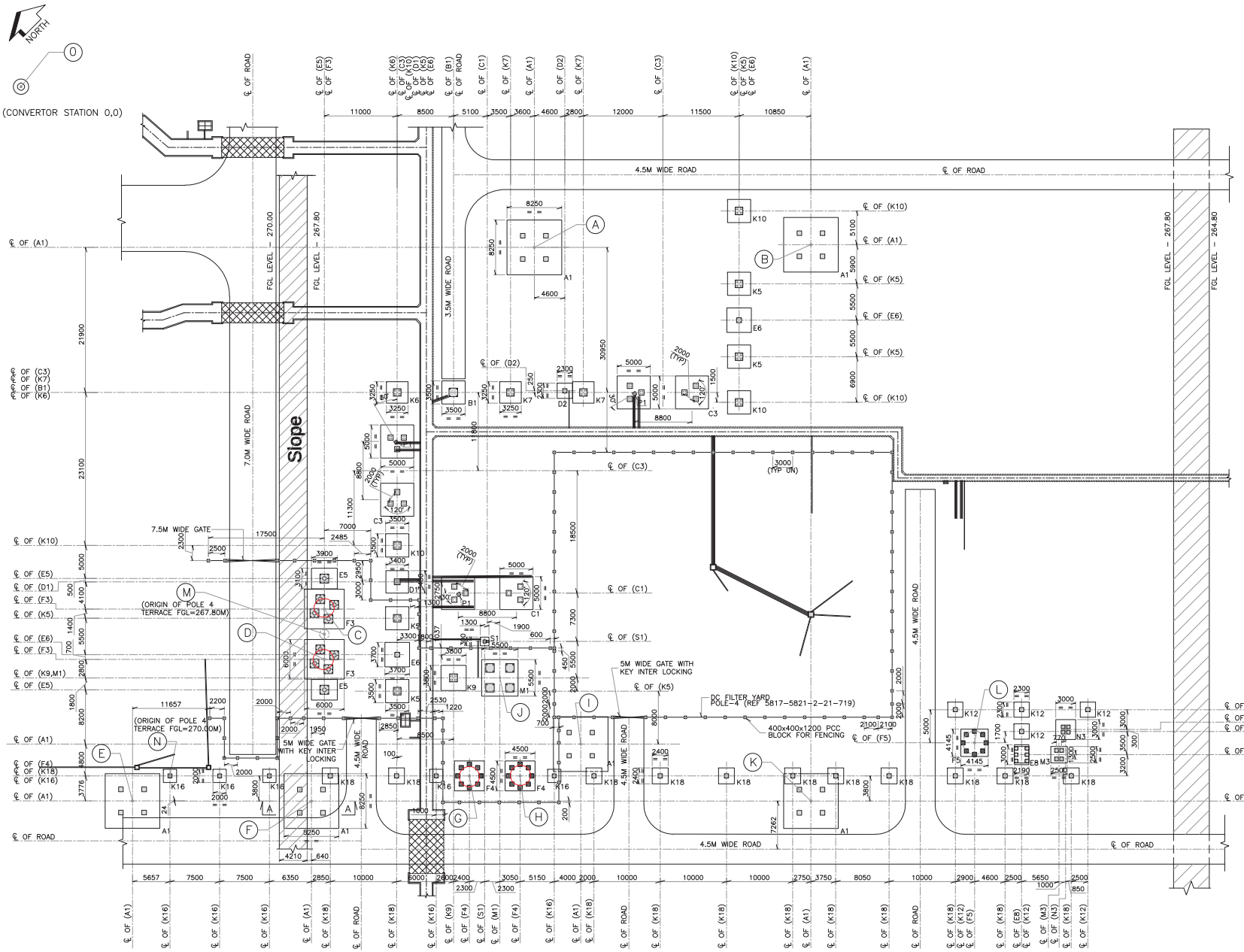

FOUNDATION LAYOUT OF DC YARD POLE-4
(FOR SECTION A-A REFER DWG NO. 5817-5821-2-21-723 (SH 02 OF 03)
1:300

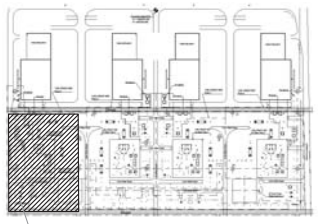

KEY PLAN

LEGEND

A1 --- LM-TOWERS
B ---- BREAKERS
C ---- DISCONNECTOR/GROUNDING SWITCH
D ---- CURRENT TRANSFORMER
E ---- ARRESTER
F ---- REACTOR
K ---- POST INSULATOR
M ---- CAPACITOR
N ---- RESISTOR
S ---- JUNCTION BOX
℄ ---- CENTER LINE

NOTES:

1. ALL DIMENSIONS ARE INDICATED IN MILLIMETERS AND LEVELS ARE IN METERS.
2. DRAWINGS SHALL NOT BE SCALED. ONLY WRITTEN DIMENSIONS SHALL BE FOLLOWED.
3. ANY DOUBT OR DISCREPANCY IN THIS DRAWING SHALL BE BROUGHT TO THE NOTICE OF ENGINEER-IN-CHARGE BEFORE STARTING THE WORK.
4. GRADE OF CONCRETE SHALL BE AS FOLLOWS UNO.
   a) FOR RCC WORKS - M25
   b) FOR PCC WORKS - 1:2:4
5. ALL REINFORCEMENT SHALL BE HIGH YIELD STRENGTH DEFORMED BAR OF GRADE Fe500 CONFIRMING TO IS: 1786.
6. DEVELOPMENT LENGTH SHALL BE 50 TIMES THE DIA OF BAR, LAP LENGTH SHALL BE 50 TIMES THE SMALLER DIA LAPPED.
7. LAPS SHALL BE STAGGERED AS PER IS-456-2000. NOT MORE THAN 50% OF BARS SHALL BE LAPPED AT A SECTION.
8. FGL (±) 0.000 CORRESPONDS TO RL 267.8/270.0
9. FOR CO-ORDINATES REFER DWG NO. 5817-5821-2-21-723 (SH 02 OF 03)

ENGINEERING REFERENCE DRAWINGS

1. RP800 PUGALUR OGA ----------1JNL100336-120 REV 12
2. POLE-4 LAYOUT AND SECTIONS DC YARD ---1JNL100485-117 REV 0
3. LAYOUT AND SECTIONS OVERVIEW DC YARD --1JNL100485-230 REV 0

CONSTRUCTION REFERENCE DRAWINGS

1. STANDARD DRAWING FOR CONCRETE WORKS---5817-5821-2-00-002
2. STANDARD REINFORCEMENT DETAILS---------5817-5821-2-00-007
3. PUGALUR CONVERTER STATION DRAIN LAYOUT---5817-5821-2-14-001
4. PUGALUR CONVERTER STATION OVERALL OUTDOOR CABLE TRENCH LAYOUT----------5817-5821-2-22-001
5. PUGALUR CONVERTER STATION ROAD LAYOUT---5817-5821-2-11-010
6. PUGALUR CONVERTER STATION STANDARD LAYOUT AND DETAILS OF CHAINLINK FENCE---5817-5821-2-00-012

FOR APPROVAL

POWER GRID CORPORATION OF INDIA LIMITED
(A government of India Enterprise)

±800 kV 6000 MW RAIGARH – PUGALUR HVDC Terminal

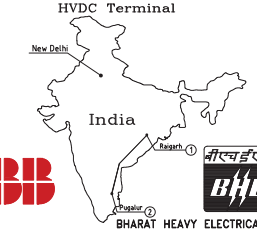

BHARAT HEAVY ELECTRICALS LTD.
TRANSMISSION BUSINESS GROUP

Civil and Building Works incl EL and Mech. Services.

ABB'S CONSULTANT
TATA Consulting Engineers Limited
Bangalore.

PUGALUR
CONVERTER STATION
DC YARD POLE - 4
OVERALL FOUNDATION LAYOUT
(SHEET 01 OF 03)

Rev #	Revision	Year/Month/Day	Appd.	Date	Drawn by	Checked by	Scale (A1-Print)	Drawing No.	Rev
R0	ISSUED FOR APPROVAL	22-08-2018	SP	22-08-2018	MDGM	TS	AS NOTED	5817-5821-2-21-723	R0

We reserve all rights in this document and in the information contained there in Reproduction or disclosure to third parties without express authority is strictly forbidden © ABB

0 50 100 mm
THIS MEASUREMENT IS 100 mm ON ORIGINAL DRAWING IF NOT 100 mm ON THIS COPY, ADJUST SCALES ACCORDINGLY.

"A" DRAWINGS ISSUED ARE NOT TO BE USED FOR CONSTRUCTION PURPOSES BUT ARE ISSUED FOR LEGAL, REFERENCE, INFORMATION & REVIEW ONLY. "B" DRAWINGS ISSUED FOR CONSTRUCTION PURPOSES.

CONSTRUCTION / FABRICATION WORK IS PERMITTED ON "B" ENGRAWING ISSUED ONLY.

INFORMATION CONTAINED HERE-IN "COLOR" IS THE PROPERTY OF BHARAT HEAVY ELECTRICALS LIMITED (BHEL) & IS TO BE USED FOR THE PURPOSE OF CONSTRUCTION/FABRICATION WORK RELATED TO BHEL ONLY.

ANNEXURE-K

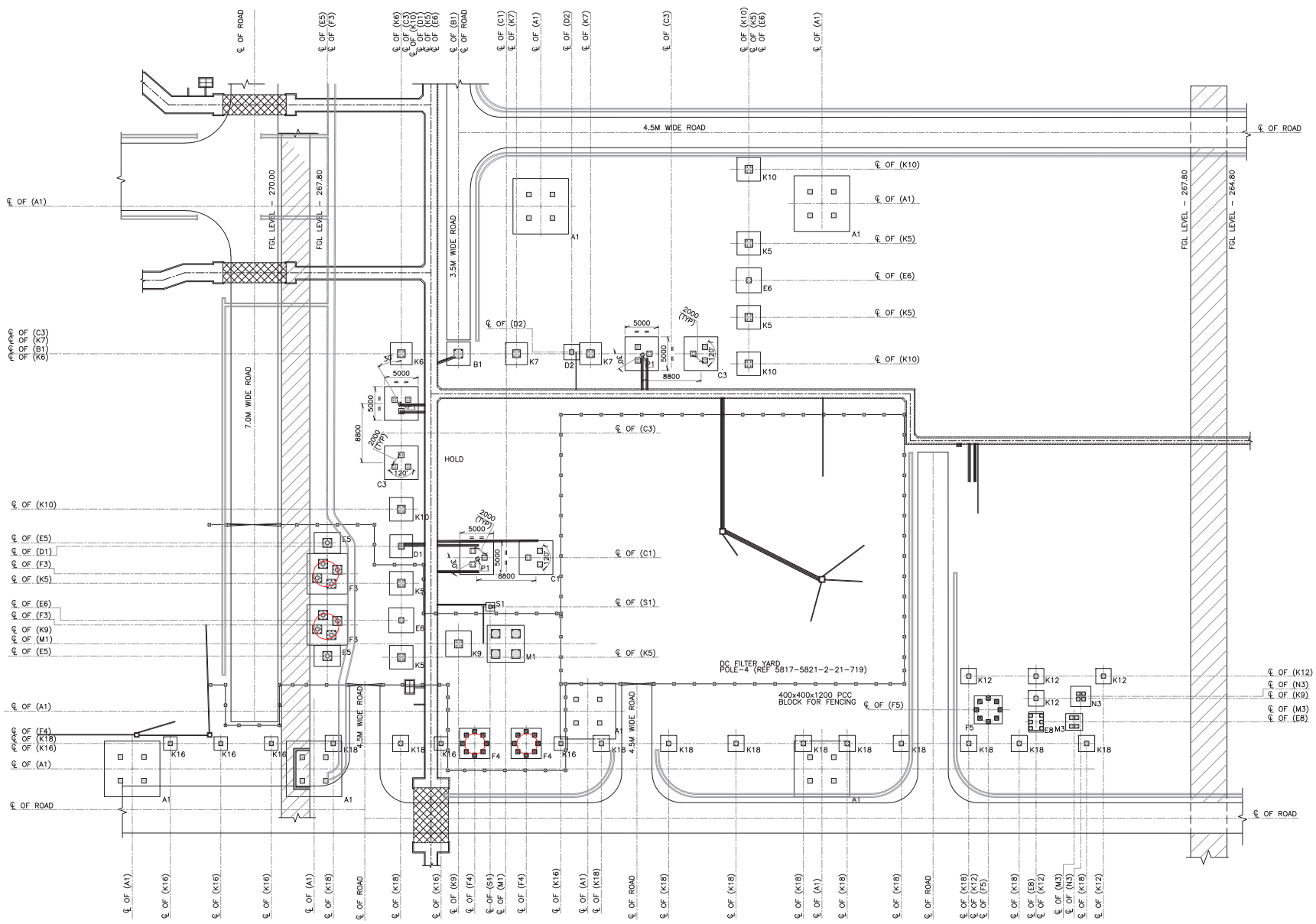

SUPERIMPOSED FOUNDATION LAYOUT OF DC YARD POLE–4

1:300

LEGEND

REFER DWG NO. 5817-5821-2-21-723 SHEET 1 OF 3

NOTES:

REFER DWG NO. 5817-5821-2-21-723 SHEET 1 OF 3

ENGINEERING REFERENCE DRAWINGS

REFER DWG NO. 5817-5821-2-21-723 SHEET 1 OF 3

CONSTRUCTION REFERENCE DRAWINGS

REFER DWG NO. 5817-5821-2-21-723 SHEET 1 OF 3

FOR APPROVAL

POWER GRID CORPORATION OF INDIA LIMITED
(A government of India Enterprise)

±800 kV 6000 MW RAIGARH – PUGALUR
HVDC Terminal

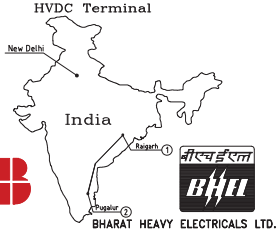

BHARAT HEAVY ELECTRICALS LTD.
TRANSMISSION BUSINESS GROUP

Civil and Building Works incl EL and Mech. Services.

ABB'S CONSULTANT
TATA Consulting Engineers Limited
Bangalore.

PUGALUR
CONVERTER STATION
DC YARD POLE - 4
OVERALL FOUNDATION LAYOUT
(SHEET 03 OF 03)

Rev #	Revision	Year/Month/Day	Appd.
R0	ISSUED FOR APPROVAL	22-08-2018	SP

Date	Drawn by	Checked by	Scale (A1-Print)	Drawing No.	Rev
22-08-2018	MDGM	TS	AS NOTED	5817-5821-2-21-723	R0

We reserve all rights in this document and in the information contained there in Reproduction or disclosure to third parties without express authority is strictly forbidden ©ABB

0 50 100 mm

THIS MEASUREMENT IS 100 mm ON ORIGINAL DRAWING
IF NOT 100 mm ON THIS COPY, ADJUST SCALES ACCORDINGLY.

"A" (PRELIMINARY) ISSUED ARE NOT TO BE USED FOR CONSTRUCTION PURPOSES BUT ARE ISSUED FOR "GENERAL INFORMATION" OR "REVIEW" PURPOSES ONLY. ISSUED "FOR CONSTRUCTION" ONLY THE "FULL" BLOCK.

CONSTRUCTION / FABRICATION WORK IS ACCEPTED ON "ENGLISH(SI) ISSUES ONLY.

INFORMATION CONTAINED "FOR INFORMATION" PURPOSES ONLY. ALL DRAWINGS / DOCUMENTS MARKED "FOR INFORMATION" ARE NOT TO BE USED FOR CONSTRUCTION/FABRICATION WORK RELATED TO PROJECT.