BHARAT HEAVY ELECTRICALS LIMITED
TRANSMISSION BUSINESS ENGINEERING MANAGEMENT

DOCUMENT No.	TB-391-316-Crane	Rev. No.	1	Prepared	Checked	Approved
TYPE OF DOC.	**TECHNICAL SPECIFICATION**	SIGN				
TITLE	***Tyre mounted Hydraulic operated Telescopic rough terrain crane***	NAME		**MSP**	**SKS**	**AG**
		DATE		29.07.20	29.07.20	29.07.20
		GROUP		**HVDC**	W.O.No	**86006**
CUSTOMER	**Power Grid Corporation of India Ltd**					
PROJECT	**±800KV, 6000MW, HVDC RAIGARH – PUGALUR TERMINALS**					
CA NO.	CC-CS/651-SR2/HVDC-3063/7/G10/NOA-II/5818 dtd 08.06.2016 for Supplies & CC-CS/651-SR2/HVDC-3063/7/G10/NOA-IV/5820 dtd 08.06.2016 for Services					
STATION	**RAIGARH and PUGALUR**					

CONTENTS

Section	Description	No of Sheets
1	Section-1: Scope, Quantities & Specific technical requirements	5
2	Annexure-A to L to Section-1	142
2	Annexure-W to Section-1	3
2	Section-2: General requirement	1
3	Project details and General Technical Requirement	18

REVISION DETAILS

Distribution	To	HVDC	TBMM	TBQM	Vendor
	Copies	1	1	1	4

COPYRIGHT AND CONFIDENTIALITY
The information on this document is the property of BHARAT HEAVY ELECTRICALS LTD.
It must not be used directly or indirectly in anyway detrimental to the interest of the company

SECTION 1

INTENT, SYSTEM REQUIREMENT, DESIGN CRITERIA AND SCOPE

1.0 INTENT OF SPECIFICATION

1.0.0 **This specification is intended to cover following activities and services in respect of all the equipment of the 2 No. *Tyre mounted Hydraulic operated Telescopic rough terrain crane (minimum extended boom length shall be 30 meters)* along with necessary accessories** at Raigarh & Pugalur Stations of RP-800 Project.

i) **Complete manufacturing including shop testing at OEM works**
ii) **Providing and O & M manuals as per specified format etc. for owners/purchaser's review, approval and records.**
iii) **Packing and transportation from the manufacturer's works to the site including customs clearance/port clearance, if required.**
iv) **Supervision of safe Unloading & storage at site.**
v) **Fabrication, pre-assembly, if any, erection testing and putting into satisfactory operation all the equipment including successful completion of trial operation.**
vi) **Training (Hands-on & classroom) to operator at site for 3 days.**
vii) **Performance and Guarantee tests after successful completion of trial operation at site.**

1.0.1 The requirements specified under SECTION 2 & SECTION 3 of the specification shall be considered as part of this section. (Section-3 should be referred for Project general requirements only)

1.0.2 It is not the intent to specify herein all the details of design and manufacture. However, the equipment and the system shall conform in all respects to high standards of design, engineering and workmanship and shall be capable of performing the required duties in a manner acceptable to Purchaser/ Owner, who will interpret the meaning of drawings and specifications and shall be entitled to reject any work or material, which in his judgment is not in full accordance herewith.

1.0.3 The Bidder shall deem to have understood completely all the tender drawings and documents and quoted accordingly.

1.0.4 **Deviation:** There shall preferably be no deviation on technical specification. The bidder shall sign and stamp the "Certificate for No Deviation" enclosed in tender towards confirmation. Except for these deviations/variations covered under Deviation Schedules which are accepted by the Purchaser before the award of the Contract, it will be the responsibility of the Bidder to fully meet the intent and the requirements of the specification within the quoted price. *Deviations in any other form including clarifications / assumptions / etc. will not be considered and it will be construed that the bid conforms strictly to the specification.*

1.0.5 The Bidder to note carefully that the parameters, estimated capacities of equipment indicated in the specification are only for the guidance of the Bidder. The system shall be designed as per relevant standards/ codes and exact capacities and quantities are to be estimated by the Bidder. All such estimations and design calculations shall be submitted for Purchaser's approval.

1.0.6 It is the responsibility of the successful Bidder to obtain necessary approval/ clearance from statutory organizations wherever applicable for the equipment/ systems under the scope specified.

1.0.7 The term **'Owner'** appearing in this specification shall refer to **Power Grid Corporation of India Limited (POWERGRID)**, the term **'Purchaser'** shall refer to **BHEL** and the term **'Contractor'** shall refer to the successful **Bidder**.

1.0.8 **Scope of Supply and Services:**

The Scope of supply includes design, engineering, manufacturing testing, inspection, packing, forwarding, transportation, assembly of parts at site (if required), other services required for successful commissioning, demonstration and training (at site) of the ***2 No. Tyre mounted Hydraulic operated Telescopic rough terrain crane (minimum extended boom length shall be 30 meters) along with necessary accessories*** *in full compliance to this technical specification.*

All equipment provided by the manufacturer shall be new, free from defects and of same type standard and quality set forth in the specifications. The scope of equipment to be furnished and services to be provided under the contract are outlined hereinafter and the same is to be read in conjunction with the provisions contained in other sections/ clauses. The scope of work under the contract shall be deemed to include all such items, which although are not specifically mentioned in the bid documents and / or in Bidder's proposal, but are required to make the equipment/ system complete for its safe, efficient, reliable and trouble free

operation. NO EXTRA COST implication to BHEL shall be considered during contract stage on account of supply & installation of these unaccounted items.

i. The Bill of Quantities shall be read in conjunction with the Instructions to Bidders, General and Special Conditions of Contract, Technical Specifications

ii. Miscellaneous items like hardware, fixtures etc. shall be deemed to be included under the relevant BOQ items and bidders shall consider the same while quoting for BOQ items.

iii. **Maintenance Tools and Tackles**
A complete unused new set of special purpose tools, tackles and accessories along with detailed instructions and maintenance manual shall be supplied. Each tool and wrench shall be stamped so as to be identified easy for its use. The tools shall be supplied in required toolbox and with a copy of instruction manual. The items supplied shall be of the best quality and specially protected against rusting in tropical climate.

1.0.9 Bill of Quantity:

Sl. No.	Item Description	Unit	Quantity for Raigarh	Quantity for Pugalur
1.0	Tyre mounted Hydraulic operated Telescopic rough terrain crane *(minimum extended boom length shall be 30 meters & crane capacity similar to RT880 or equivalent)* along with necessary accessories*	No	01	01

* The above includes Erection/assembly, Commissioning, testing, demonstration at site of the above equipment & Training (Hands-on & classroom) to operator.

Notes:

A) Item supplied shall be new & should not have been used earlier.
B) Supplier should specify the Make & Model & accessories/complete scope of supply offered along with Technical Bid.
C) Supplier is required to provide all the Technical details/ Catalogue/Datasheet of the offered equipment/ Crane suitability-feasibility report along with technical bid.
D) Make/Model offered is subject to Powergrid approval. Powergrid approval shall be

considered as final.

E) Supplier is required to give an undertaking "to address issue of warranty / after sales services of the equipment from OEM".

F) Bidder shall submit the detailed list of mandatory/availability spares recommended by OEM along with the bid for our information only. Supplier is required to give an undertaking "to address availability of spares for the offered equipment make/model from OEM for 10 years".

G) Following points should be taken care while quoting for the above mentioned items. Prices against the below points shall deemed to be included in the main equipment.

1) *Bidder should comply all requirements given in this specification while quoting for above items.*

2) *The contractor shall supply one complete set of tools, tackles and other minor items required for maintenance / upkeep and overhaul of the equipment.*

3) *It will be the responsibility of the contractor to obtain statuary clearance & license for operation, if any, prior to supplies as required by POWERGRID.*

4) *Any spares required for commissioning purpose shall be supplied by the contractor & the price of the same shall be included in the main equipment price.*

1.0.10 General Technical Requirements:

- The equipment offered shall be from standard range of manufacturer and shall be of proven durability.
- All material/parts used shall be free from flaws and defects and shall confirm to the relevant international standards and good engineering practices.
- The design of the equipment shall be based on the technical specifications.
- The equipment shall comply with the latest applicable Indian/British/American Standards/Codes.
- The equipment shall meet the international safety standards.

1.0.11 Specific Technical Requirements:

Tyre mounted Hydraulic operated Telescopic rough terrain crane (capacity similar to RT880 or equivalent) along with necessary accessories. The crane shall be able to lift and install/ dismantle the heaviest/ highest circuit breaker/ bushing/ reactor/ smoothing reactor part.

For weights of the equipment to be handled by crane & their respective locations in the station, bidder to refer following enclosed documents & submit a suitability/feasibility report of the offered crane make/model proving that the crane is suitable for desired function along with technical bid***:***

1. OGA of the Wall Bushing in the valve hall (Annexure-A)
2. OGA of HV Capacitor (Annexure-B)
3. OGA of DC Filter reactor (Annexure-C)
4. OGA of DC Pole & DC Neutral Smoothing reactor (Annexure-D)
5. Method statement of Wall Bushing maintenance (Annexure-E)
6. Method statement of HV Capacitor & DC Filter reactor (Annexure-F)
7. Method statement for DC pole smoothing reactor & DC neutral smoothing reactor (Annexure-G)
8. DC yard layout for Pole-1,2,3 & 4 for Raigarh Station (Annexure-H)
9. Drain-Road cum foundation layout Pole-1,2,3 & 4 for Raigarh Station (Annexure-I)
10. DC yard layout for Pole-1,2,3 & 4 for Pugalur Station (Annexure-J)
11. Drain-Road cum foundation layout Pole-1,2,3 & 4 for Pugalur Station (Annexure-K)
12. DC Filter yard layout (Annexure-L).

Further bidder should comply the requirement as specified in Annexure-W (Powergrid Specification)

Bidder need to furnish due compliance on Annexure-W (as mentioned above) along with technical bid.

1.0.12 Quality & Inspection

Acceptance of Make for main items used in the equipments shall be subjected to POWERGRID QA&I approval. There shall not be any price implication on account of any change of make by POWERGRID during detailed engineering and considered by bidder during tender stage.

The inspection of Lifting equipment shall be done as per technical specification/ approved technical data sheet/GA and customer approved quality plan before dispatch clearance.
Contractor shall ensure to produce all test certificates of equipment inline with technical requirement to satisfy customer.

1.0.13 Acceptance Tests:

Bidder to submit list of acceptance tests in line with relevant standard/OEM practice along with the technical bid submission.
Acceptance tests shall be carried out on equipment as per relevant applicable International standards/equivalent Indian standards for Rough terrain Crane.
Purchaser reserves the right to inspect the material and witness the acceptance tests at manufacturer's works/ test laboratory. The supplier shall intimate the Purchaser regarding readiness of the Equipment for the test, at least 30 days in advance, so that Purchaser can

depute representative to witness the same.
However, all load bearing components shall be load tested as per the relevant international standards and valid manufacturer's load test certificate shall be submitted along with the supply.

1.0.14 Maintenance Criteria:
The bidder shall also submit the schedule regarding the type of maintenance/ testing to be carried out periodically on the Rough terrain crane to ensure their healthiness. A check list for condition monitoring of equipment shall also be furnished by the bidders.

Refer section-3 of this document for project details and general specification.

ANNEXURE-A

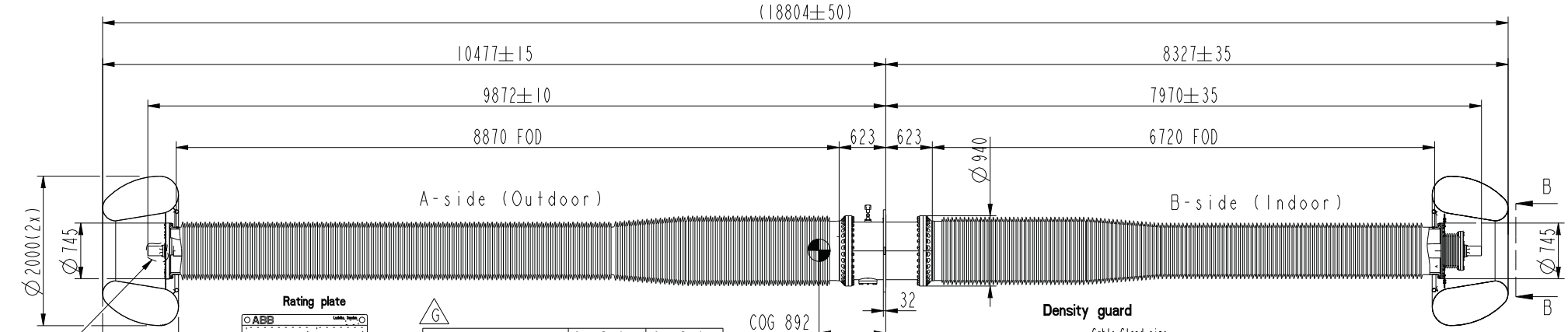

Rating plate

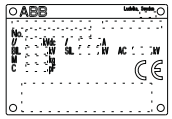

	Shed Profile 55-55/25 (S-P/PI)	Shed Profile 60-70/50 (S-P/PI)
A-Side, Creepage Distance	39800	-
B-Side, Creepage Distance	-	23200

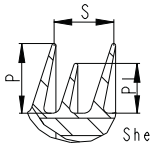

Shed Profile

Density guard

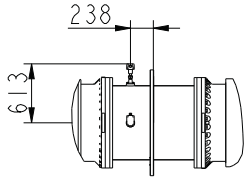

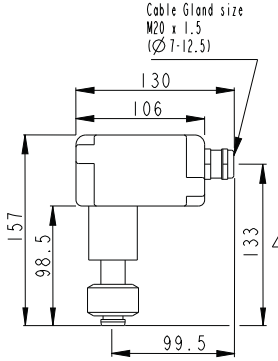

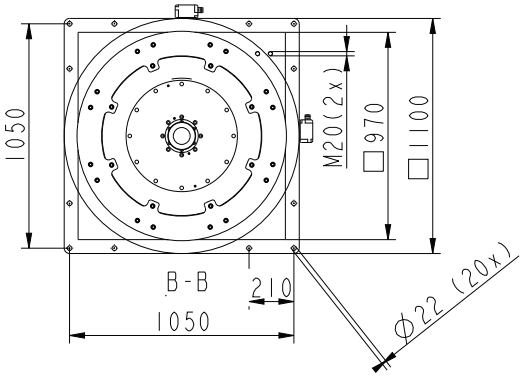

Maximum Terminal Loads	Fx [kN] S.C.Load	Fy [kN] S.C.Load	Fz [kN] S.C.Load	Fx [kN] Wind Load	Fy [kN] Wind Load	Fz [kN] Wind Load	Dead Load [kg]
Wall bushing, pole	3,2	0,5	N.A.	7,5	4,5	N.A.	150

Bushing type	SF_6 insulated	
Material	Composite	
Catalog number:	1ZSC002777-AAA	
Electrical Data		
Rated voltage	800	kVDC
Maximum continous DC voltage	816	kVDC
Rated current at 50°C ambient	5046	A
Rated continous overload at 50°C ambient	5343	A
Short-time current withstand	297	kA (1 s)
Lightning impulse	1984	kV
Switching impulse	1700	kV (wet/dry)
Dry power frequency (1.5xU_p)	945	kV
DC withstand voltage 2 hours	1224	kVDC (dry)
Polarity reversal	±1020	kVDC
Capacitance	260	pF
General Data		
Creepage distance, A-side	39800	mm
Creepage distance, B-side	23200	mm
Operating temperature range	+60 to -20	°C
Filling pressure	0.57	MPa abs at 20°C
Minimum operating pressure	0.5	MPa abs at 20°C
Maximum operating pressure	0.7	MPa abs at 20°C
Maximum SF_6 leakage rate	0,5	% per year
Mass at filling density	4041	kg
Mass Empty	3841	kg
Cantilever test load	5000	N
Cantilever operating load	2500	N
Mounting angle	10°	from horizontal
Terminal	1ZSC002786-AAA	Cu/Ag
Corona Shield	1ZSC001635-AAB	Indoor
	1ZSC001635-AAJ	Outdoor

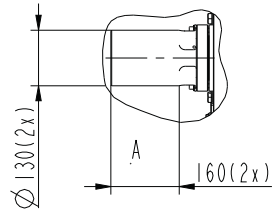

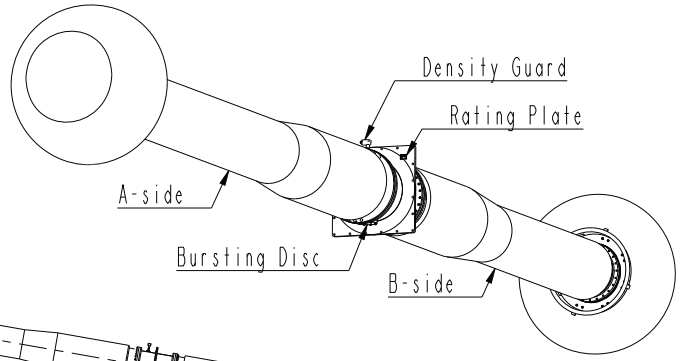

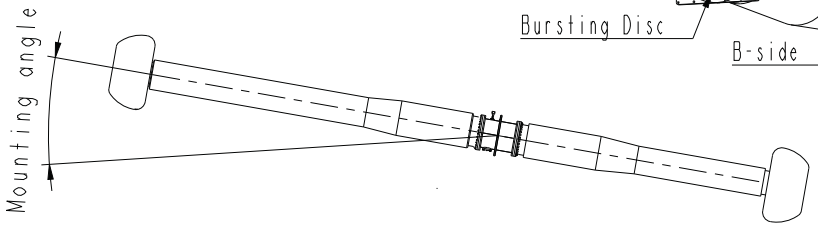

The bushing shall be installed in a non-magnetic mounting plate.

CLIENT: Power Grid Corporation of India Limited
(A government of India Enterprise)

PROJECT: ± 800 KV, 6000MW HVDC Raigarh-Pugalur Terminals

Station: Raigarh	Document Type: Dimension Drawing	Language: En	Equipment Group code: 009
RS Document id: 1JNL371958			
Item Designation: =P(1,2,3,4).U.X1			Sheets/of: 1 of 1
Document Title: Wall Bushing GGFL			
Document Number: 1ZSC026210A020			
Installation & Maintenance guide: 1ZSC000563-AAJ			
Terminal forces according to: 1JNL355427 rev.C			

Prepared: Jessica Lindqvist	2017-10-20	Responsible department: PGCO/BK	Title: GGFL 800
Modified by: Jessica Lindqvist	2017-10-23	Take over department	
Approved by: Johan X Eriksson	2017-10-23	Used in product	Language: 82
Revision: G	General & Electrical data updated, terminal loads & shed profile added		Order
			Sheet no.: 1
			Document no.: 1ZSC026210A020
			No. Shts.: (1)

ABB

This document is issued by means of a computerized system. The digitally stored original is electronically approved. The approved document has a date entered in the 'Approved'-field. A manual signature is not required.

The information contained in this document has to kept strictly confidential. Any unauthorized use, reproduction, distribution or disclosure to third parties are strictly forbidden. ABB reserves all rights regarding Intellectual Property Rights. © Copyright 2013 ABB. All rights reserved.

ANNEXURE-B

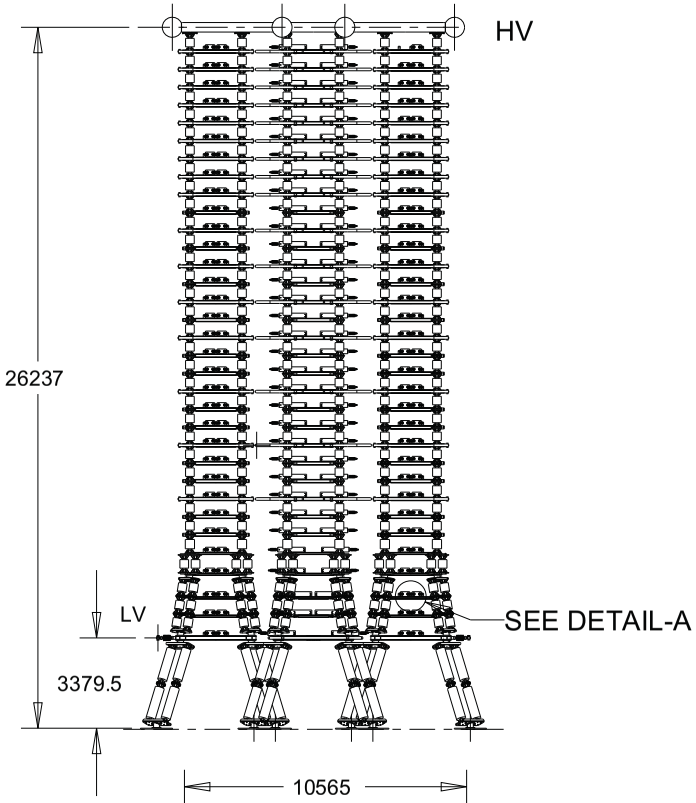

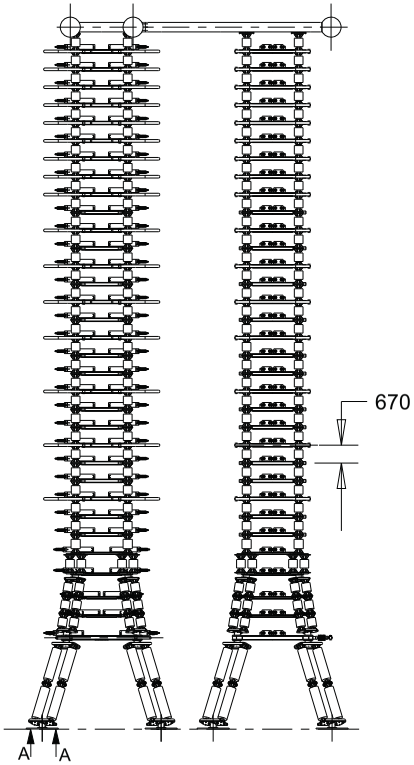

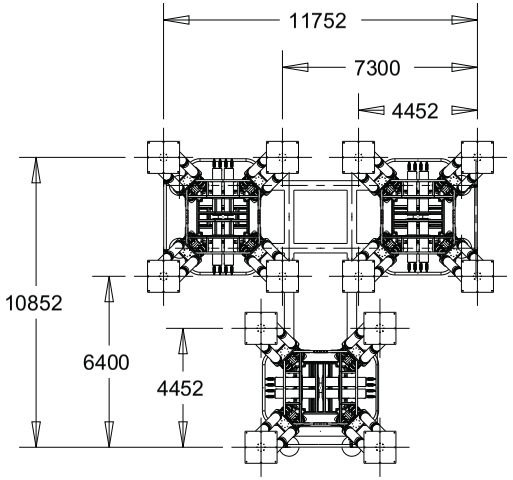

BOTTOM VIEW

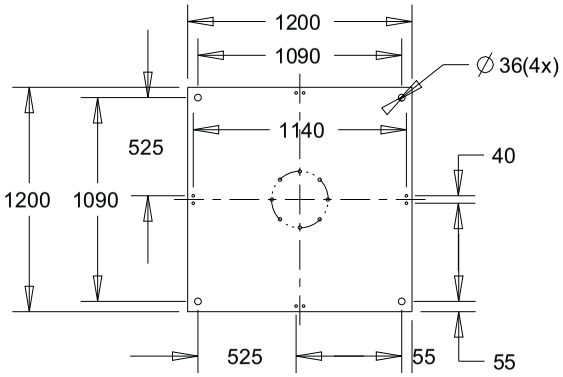

A-A

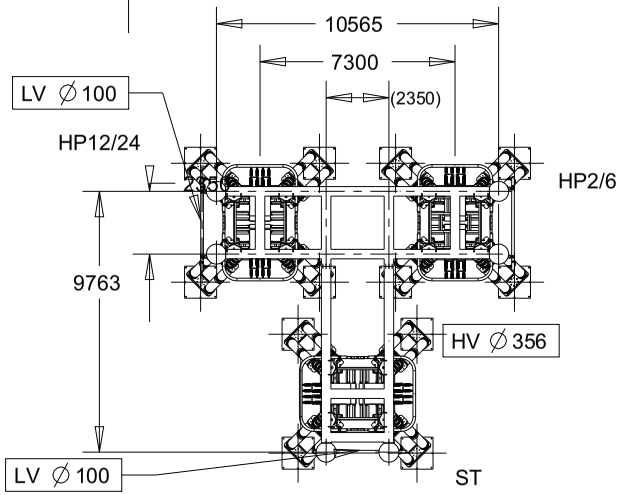

TOP VIEW

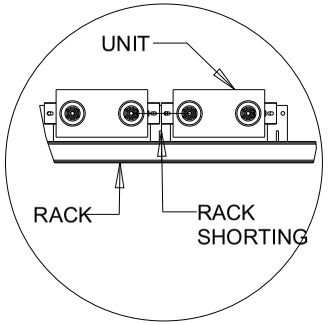

DETAIL-A

INSULATION LEVEL		
	SIWL(kVp)	LIWL(kVp)
HP2/6 - RAIGARH	1610	1989
HP2/6 - PUGALUR	1628	1984
HP12/24 - RAIGARH	1610	1989
HP12/24 - PUGALUR	1628	1984
ST - RAIGARH	1610	1989
ST - PUGALUR	1628	1984

APPROX. WEIGHT: SEE TABLE (SHEET 2)

BANK ITEM DESIGNATION			
DC HV FILTER CAPACITOR			
HP2/6 RAIGARH	P(1,2,3,4).Z1.Z1.C1	HP2/6 PUGALUR	P(1,2,3,4).Z1.Z1.C1
HP12/24 RAIGARH	P(1,2,3,4).Z1.Z2.C1	HP12/24 PUGALUR	P(1,2,3,4).Z1.Z2.C1
ST RAIGARH	P(1,2,3,4).Z1.Z3.C1	ST PUGALUR	P(1,2,3,4).Z1.Z3.C1

Client :
Power Grid Corporation Of India Ltd.
(A Govt. Of India Enterprise)

Comments: REV03:Revised added in Article No.(Item No.8,511A,512A&514)-05.09.18		Order: RP800 A/C PGCIL	Scale: NTS	Units: mm	Format: A3
Prepared: Hallstein Kanmani	Based on	TITLE: HP2/6,HP12/24,ST - DC FILTER CAPACITOR BANK			Language: EN
Reviewed: Rajendran Kulasekaran	Responsible department: PGHV-C				Page: 1 of 14
Approved: Rajendran Kulasekaran	Document kind				
ABB INDIA LIMITED		Document id. YC1H320001-001			Revision 03

The information contained in this document has to be kept strictly confidential. Any unauthorized use, reproduction, distribution or disclosure to third parties is strictly forbidden. ABB reserves all rights regarding Intellectual Property Rights.
© Copyright 2015 ABB

ANNEXURE-B

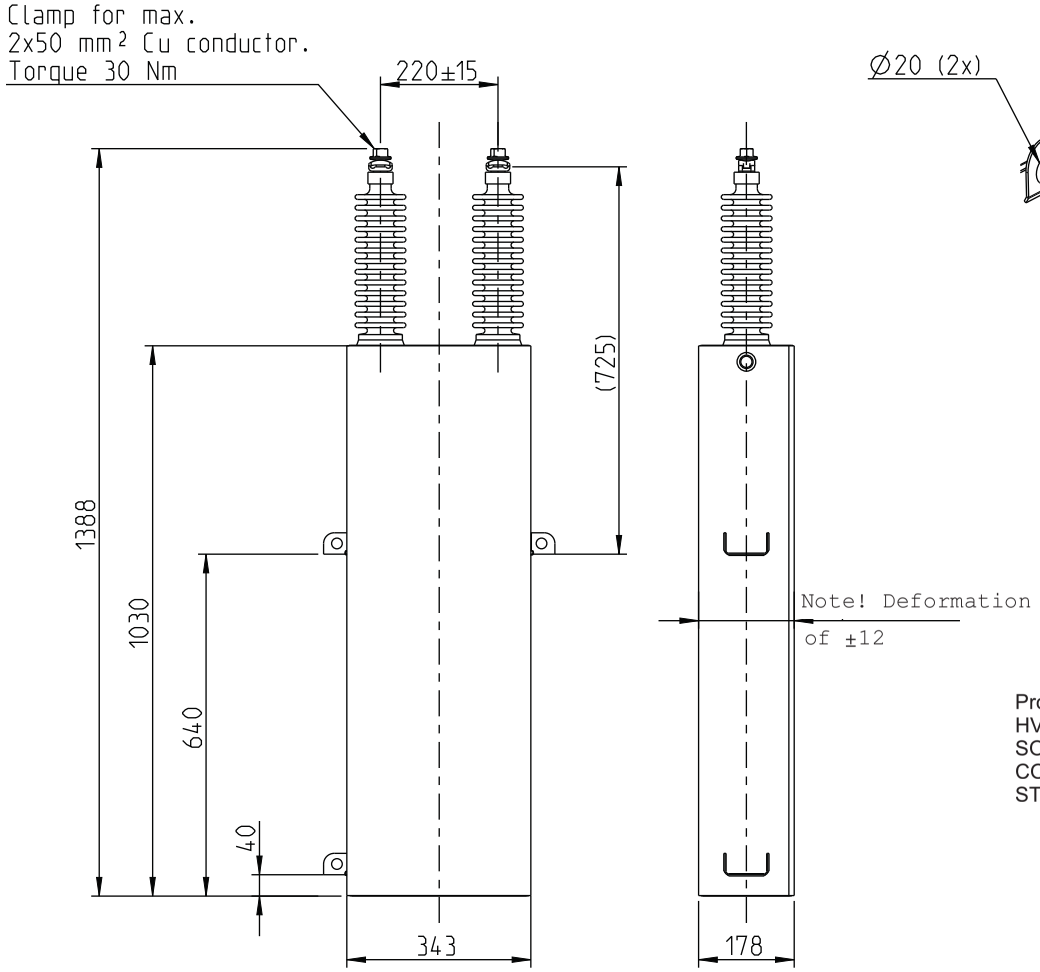

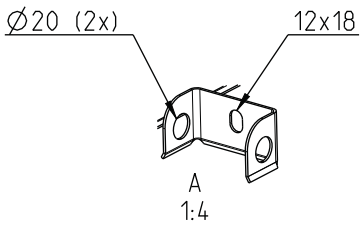

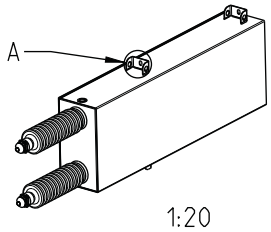

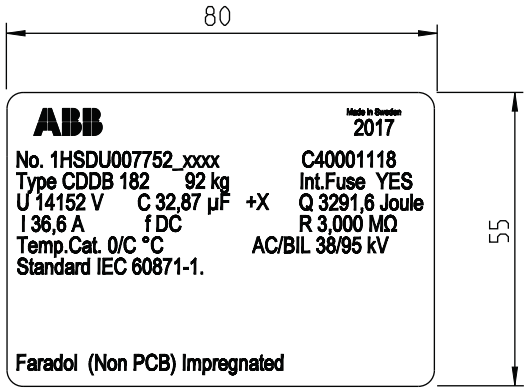

Material: Black anodized aluminium

xxxx) Unit individual number
X) Deviation sign

Project: ± 800 kV, 6000MW HVDC TERMINAL ASSOCIATED WITH
HVDC BIPOLE LINK BETWEEN WESTERN REGION (RAIGARH, CHHATTISGARH) AND
SOUTHERN REGION (PUGALUR, TAMILNADU) - NORTH TRICHUR (KERALA)
CONTRACT NO.: CC-CS/651-SR2/HVDC-3063/7/G10/CA-I-CA-V/5817-5821 dated 2017-01-25
STATION NAME: PUGALUR

Project information
RP-800 RS-014
HP 24/12
Item Designation:-P(1,2,3,4).Z1.Z2.C1
ST
Item Designation:-P(1,2,3,4).Z1.Z3.C1
Color: RAL 7042

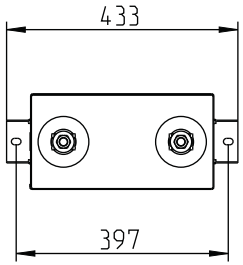

Tolerances according to: ISO 13920-B
1495 +5 /-10 mm

Comments: Rev E / Updated information 2017-12 12 M. Engström		Order: C40001118	Scale / Units: mm	Format: A3
Prepared: 2017-09-26 M. Engström	Based on: -	Kondensatorenhet CDDB 182		
Reviewed: - -	Responsible department: PGHV/COD			Language: en/sv
Approved: 2017-09-26 F. Mellembröten	Part lifecycle state: DESIGN	Capacitor unit CDDB 182		Page: 1 of 1
ABB	We reserve all rights in this document and in the information contained therein. Reproduction, use or disclosure to third parties without express authority is strictly forbidden. ABB Technology Ltd © Copyright 2017 ABB	C820077521HSN000034		Revision: E

पावरग्रिड

CLIENT:
Power Grid Corporation Of India Ltd.
(A Govt. Of India Enterprise)

ANNEXURE-B

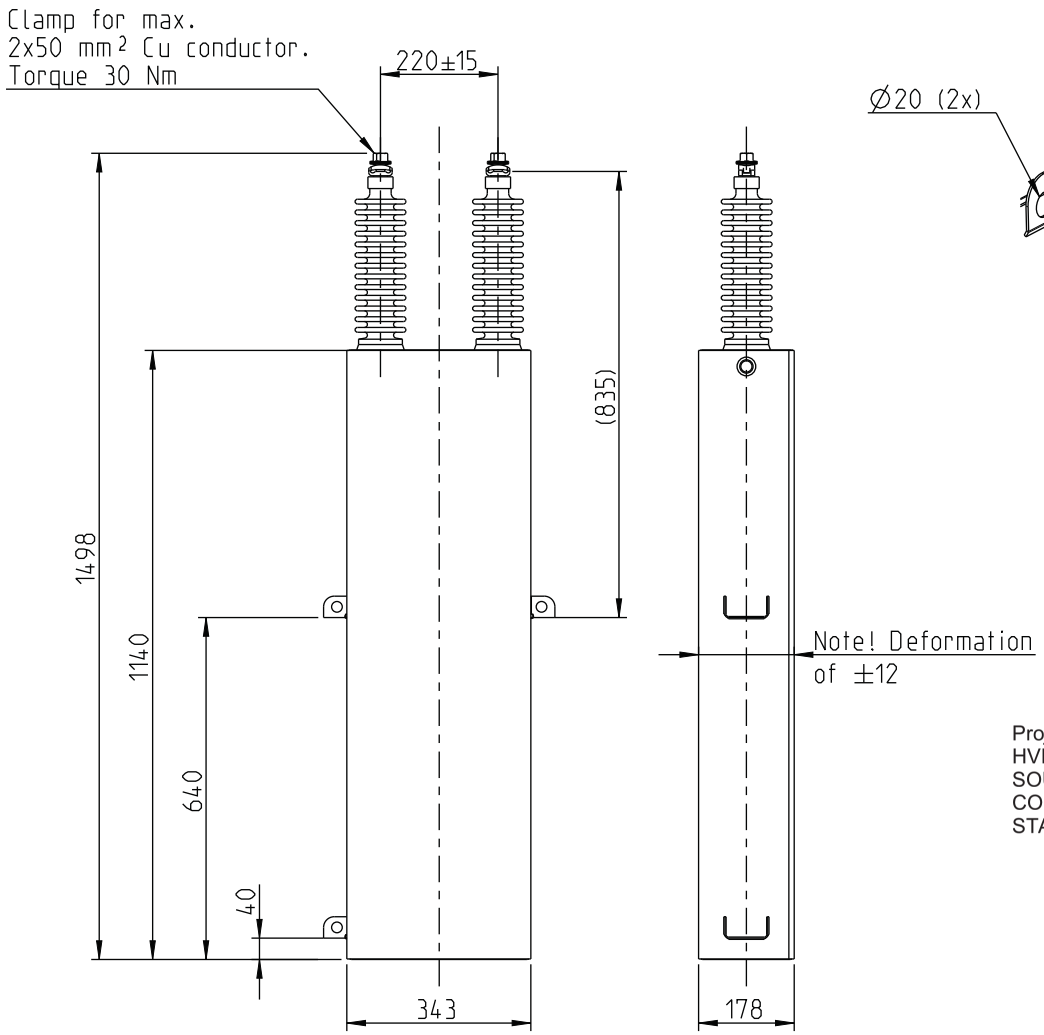

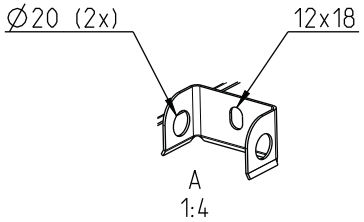

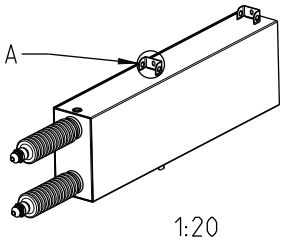

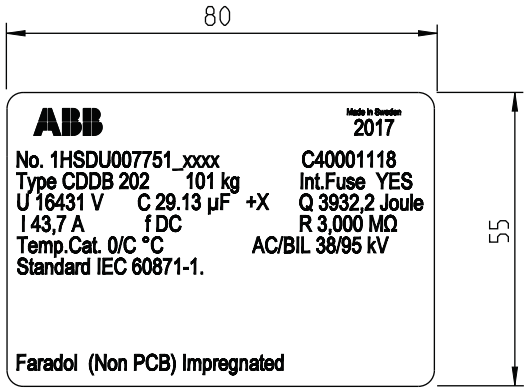

Material: Black anodized aluminium

xxxx) Unit individual number
X) Deviation sign

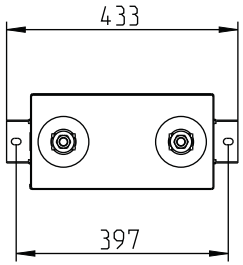

Project: ± 800 kV, 6000MW HVDC TERMINAL ASSOCIATED WITH
HVDC BIPOLE LINK BETWEEN WESTERN REGION (RAIGARH, CHHATTISGARH) AND
SOUTHERN REGION (PUGALUR, TAMILNADU) - NORTH TRICHUR (KERALA)
CONTRACT NO.: CC-CS/651-SR2/HVDC-3063/7/G10/CA-I-CA-V/5817-5821 dated 2017-01-25
STATION NAME: PUGALUR

Project information
RP-800 RS-014
HP2/6
Item Designation:-P(1,2,3,4).Z1.Z1.C1
Color: RAL 7042

Tolerances according to: ISO 13920-B
1495 +5 /-10 mm

CLIENT:
Power Grid Corporation Of India Ltd.
(A Govt. Of India Enterprise)

Comments: Rev G/ Updated 2017-12-124 M. Engström		Order: C40001118	Scale	Units: mm	Format: A3
Prepared: 2017-09-29 M. Engström	Based on: -	Kondensatorenhet CDDB 202			
Reviewed: - -	Responsible department: PGHV/COD				Language: en/sv
Approved: 2017-09-29 F. Mellembröten	Part lifecycle state: DESIGN	Capacitor unit CDDB 202			Page: 1 of 1
ABB	We reserve all rights in this document and in the information contained therein. Reproduction, use or disclosure to third parties without express authority is strictly forbidden. ABB Technology Ltd © Copyright 2017 ABB	C820077511HSN000034			Revision: G

ANNEXURE C

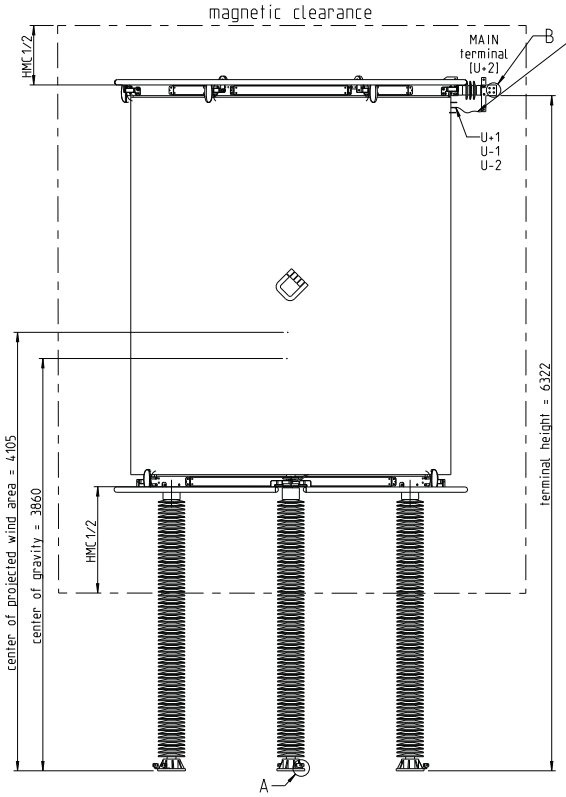

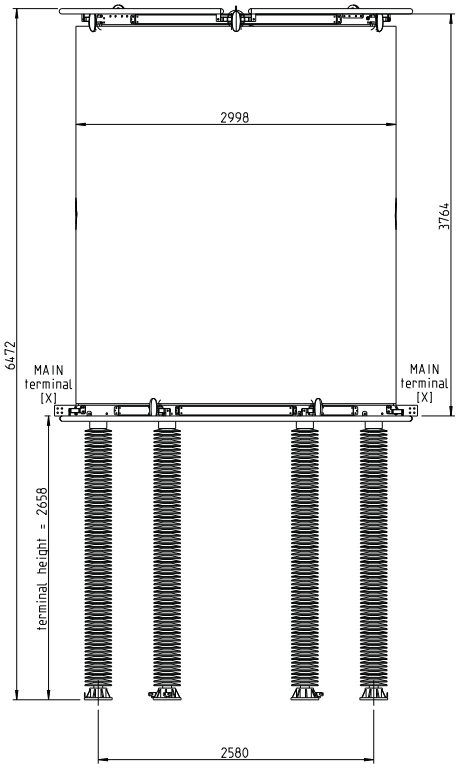

detail B
terminal 1:2

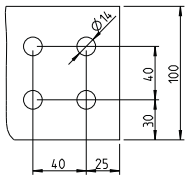

material: Aluminium
thickness=10

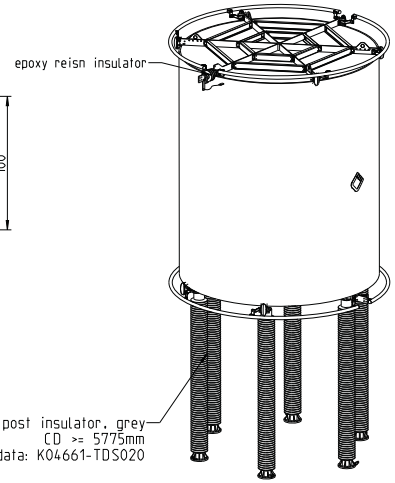

detail: mounting base
1:4
thickness=20

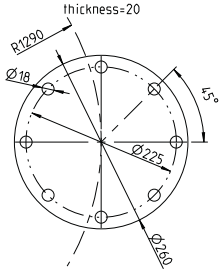

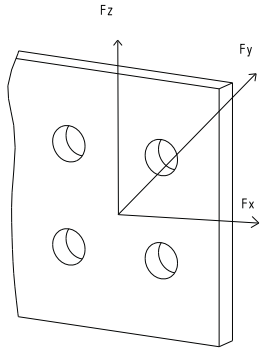

terminal loads:
Fx = 0.75 kN
Fy = 0.75 kN
Fz = 0.75 kN

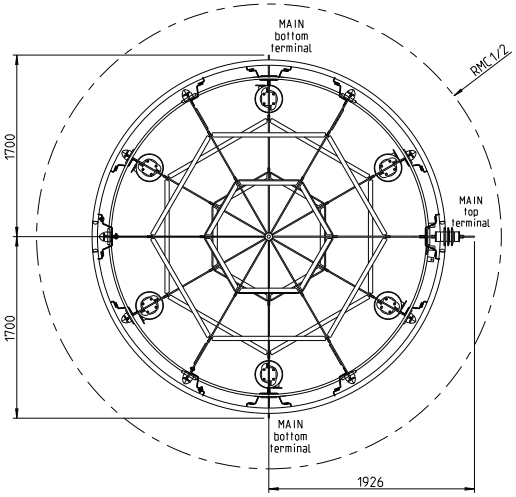

HMC1/2 = 880/1760
RMC1/2 = 2655/3440

min. center-to-center spacing (Dcc)= 6630 mm

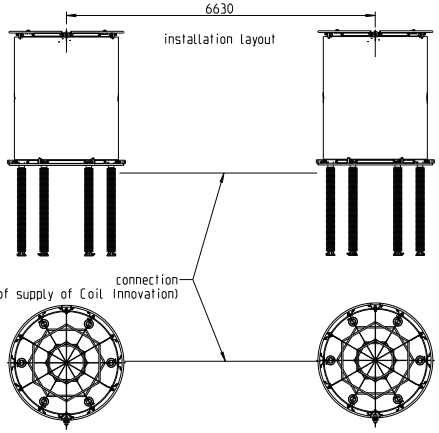

Detail A: earthing terminal
1:2

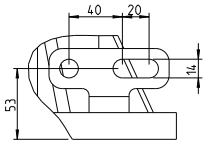

serial number 10-17
serial number 18: spare without support structure and insulator

technical data:		
highest voltage for equipment (Umax)		136 kV
max. cont. voltage across reactor		47.5 kV
rated power frequency		50 Hz
rated tuning frequencies (ff1,ff2)		100/300 Hz
LIWL across reactor		430 kV
LIWL terminal X to ground		795 kV
LIWL terminal U to ground		876 kV
SIWL phase to ground		730 kV
rated inductance / coil		622.5 mH
coils per branch / number of branches		2 / 1
rated cont. current incl. harmonics		117 A
major harmonic currents	100Hz	115.85 A
	300Hz	14.4 A
	150Hz	9.5 A
	250Hz	2.2 A
	200Hz	1.6 A
	400Hz	0.6 A
rated inrush current, peak		0.75 kA
- resonant frequency		79.4 Hz
- time constant		100 ms
total weight		2090 kg

KEY PLAN:-

NOTES:-
1. ALL DIMENSIONS ARE IN MILLIMETERS UNLESS SPECIFIED OTHERWISE.
2. ALL REFERENCE DRAWINGS SHALL BE ALONG WITH THE REFERENCE TO THE PREVIOUS REVISION.
3. RODENT & BIRD PROTECTION ONLY APPLICABLE FOR REACTORS WITH INTEGRATED ADDITIONAL EQUIPMENT.

LEGEND:-

REFERENCE DRAWINGS:-

tolerances
0-500 3%
500-2000 2%
>2000 1%

terminals:
do not use the terminals as supports for the connecting bus work! for max. loads see instruction manual.

surface treatment:
RTV, silicone coating
RAL7040, grey

assembly, installation & tapping connection according document K04661-MIN020

magnetic clearance:
The space within the magnetic clearance contour, prescribed by RMC1 and HMC1 shall not contain metallic parts. For larger metallic structures, such as concrete rebar, grounding wiring and fencing the distances RMC2 and HMC2 should be kept. Conductive loops surrounding the reactor in most cases should be avoided and electrical clearances to conductive parts must be maintained. Special attention should be paid to the proper functioning of electric devices in the vicinity of the reactor such as in accordance with EN 61000-6.

We reserve all rights in this document and in the information contained there in. Reproduction, use or disclosure to third parties without express authority is strictly forbidden © ABB.

EQUIPMENT GROUP: EQ.024

DOCUMENT KIND: Outline Drawing

ITEM DESIGNATION: =P(1,2,3,4).Z1.Z1.L2

STATION NAME: Raigarh Station

CONTRACT NO. 4571728467

CLIENT: Power Grid Corporation Of India Ltd. (A Govt.Of India Enterprise)

REV.	DATE	DESCRIPTION	REV.BY.	CHK.BY.	APPD.BY.
03	16.11.2017	update according customer request	PVK-Hm	PVK-Sg	PV-Ag
02	27.09.2017	update according customer request	PVK-Hm	PVK-Sg	PV-Ag
01	11.08.2017	update according customer request	PVK-Hm	PVK-Sg	PV-Ag
00	21.07.2017	initial release	PVK-Hm	PVK-Sg	PV-Ag

ABB HVDC

BHARAT HEAVY ELECTRICALS LTD. TRANSMISSION BUSINESS GROUP

A-4070 Eferding
Nikola-Tesla-Straße 1
t: +43017272 75200

PAPER SIZE-A1

PROJECT: ± 800 KV, 6000MW HVDC RAIGARH-PUGALUR TERMINALS

Scale 1 : 25

SPEC. NO.: IJNL372904.C

TITLE: HP2/6 Filter reactor, lower FH-622.5/117/430/795

Total Sh. 1

DWG. NO. K04661-M0200

Sheet 1 OF 1

ANNEXURE-D

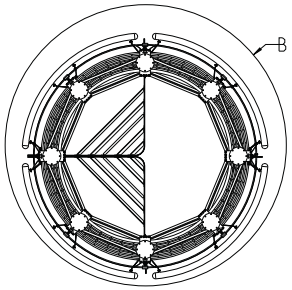

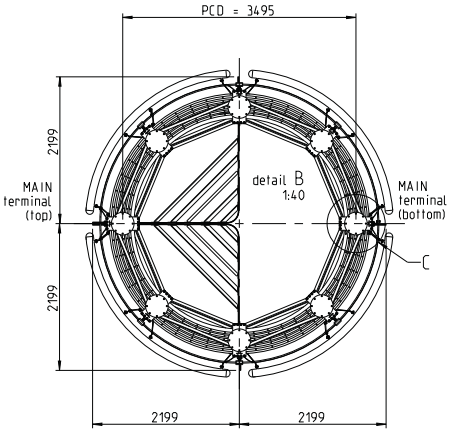

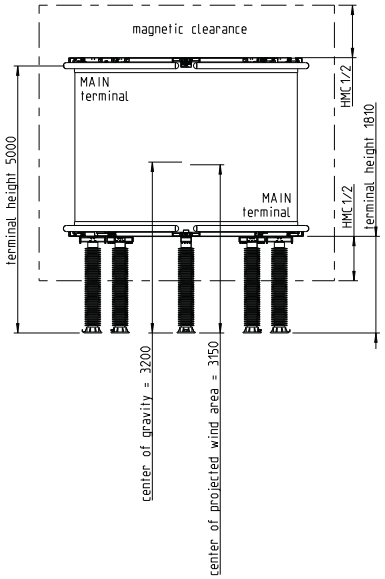

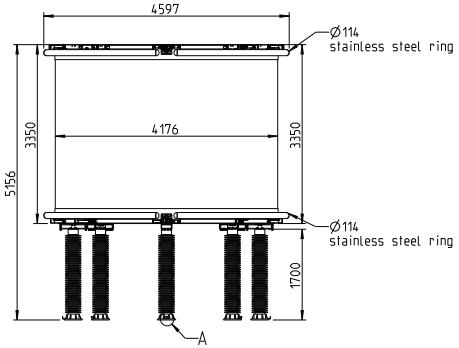

detail C
mounting base 1:5

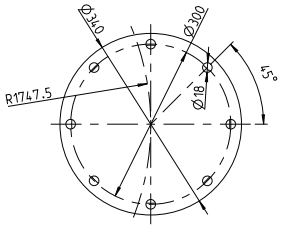

thickness = 18

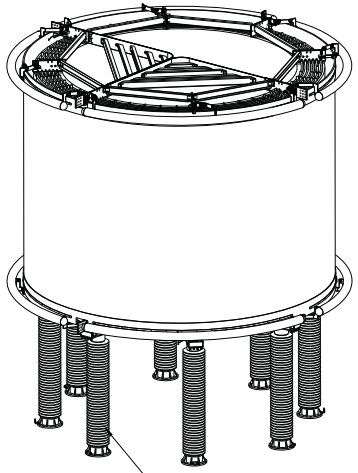

LAPP porcelain post insulator, brown
C30-750-II, CD >= 5700mm
technical data: K04657-TDS010

assembly & installation according to
document K04657-MIN010

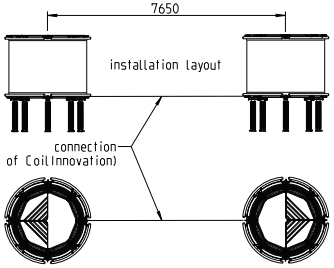

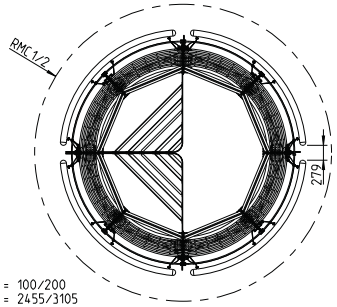

HMC1/2 = 100/200
RMC1/2 = 2455/3105

min. center-to-center spacing (Dcc)= 7650 mm

detail A
earthing terminal 1:2

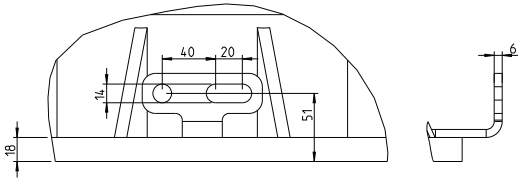

serial number 01-08

technical data:	
nom. direct voltage to earth	n.a. kV
max. cont. dc operating voltage to earth	110 kV
max. cont. ac operating voltage to earth	n.a.
LIWL (across/phase to ground)	1300/644 kV
SIWL phase to ground	518 kV
rated inductance	75 mH
coils per reactor / pole	1 / 2
nominal direct current	1875 A
max. continuous direct current (at 50°C)	2076 A
max. continuous direct current (at 33°C)	2316 A
max. continuous current spectrum	100Hz 134.71 A 150Hz 12.75 A 250Hz 8.44 A 300Hz 35.67 A 600Hz 25.1 A 2400Hz 14.09 A
mechanical short time current, peak	18 kA
reactor weight	16550 kg
coronaring weight	200 kg
support insulator weight	1600 kg
total weight	18350 kg

KEY PLAN:-

NOTES:-
1. ALL DIMENSIONS ARE IN MILLIMETERS UNLESS SPECIFIED OTHERWISE.
2. ALL REFERENCE DRAWINGS SHALL BE ALONG WITH THE REFERENCE TO THE PREVIOUS REVISION.

LEGEND:-

REFERENCE DRAWINGS:-

tolerances
0-500 3%
500-2000 2%
>2000 1%

terminals:
do not use the terminals as supports for the connecting bus work! for max. loads see instruction manual.

surface treatment:
RTV silicone coating
(on winding surface)
RAL7040, grey

magnetic clearance:
The space within the magnetic clearance contour, prescribed by RMC1 and HMC1 shall not contain metallic parts. For larger metallic structures, such as concrete rebar, grounding wiring and fencing the distances RMC2 and HMC2 should be kept. Conductive loops surrounding the reactor in most cases should be avoided and electrical clearances to conductive parts must be maintained. Special attention should be paid to the proper functioning of electric devices in the vicinity of the reactor such as in accordance with EN 61000-6.

We reserve all rights in this document and in the information contained there in Reproduction,use or disclosure to third parties without express authority is strictly forbidden © ABB.

EQUIPMENT GROUP:	EQ.005
DOCUMENT KIND:	Outline Drawing
ITEM DESIGNATION:	=P(1,2,3,4).WN.L(1,2)
STATION NAME:	Raigarh Station
CONTRACT NO.	4571723259
CLIENT:	Power Grid Corporation Of India Ltd. (A Govt.Of India Enterprise)

REV.	DATE	DESCRIPTION	REV.BY.	CHK.BY.	APPD.BY.
06	27.11.2017	coronaring for insulator Ø170mm (page 3)	PVK-Fm	PVK-Sg	PV-Ag
05	16.10.2017	changes due to customer request	PVK-Fm	PVK-Sg	PV-Ag
04	14.09.2017	insulator bottom flanges (thickness, PCD)	PVK-Fm	PVK-Sg	PV-Ag
03	04.09.2017	drawing cleanup	PVK-Fm	PVK-Sg	PV-Ag

ABB HVDC

BHARAT HEAVY ELECTRICALS LTD. TRANSMISSION BUSINESS GROUP

A-4070 Eferding
Nikola-Tesla-Straße 1
T: +43017272 75200

PAPER SIZE-A1

PROJECT
± 800 KV, 6000MW HVDC
RAIGARH-PUGALUR TERMINALS

Scale 1 : 50

SPEC. NO.: IJNL372326,E

TITLE: Neutral Smoothing Reactors DCH-75/1880/1300/644

Total Sh. 3

DWG. NO. K04657-M0100

Sheet 2 of 3

ANNEXURE D

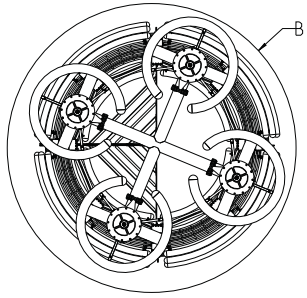

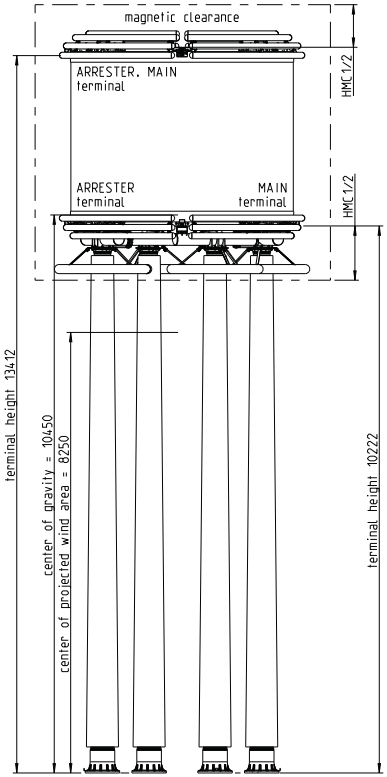

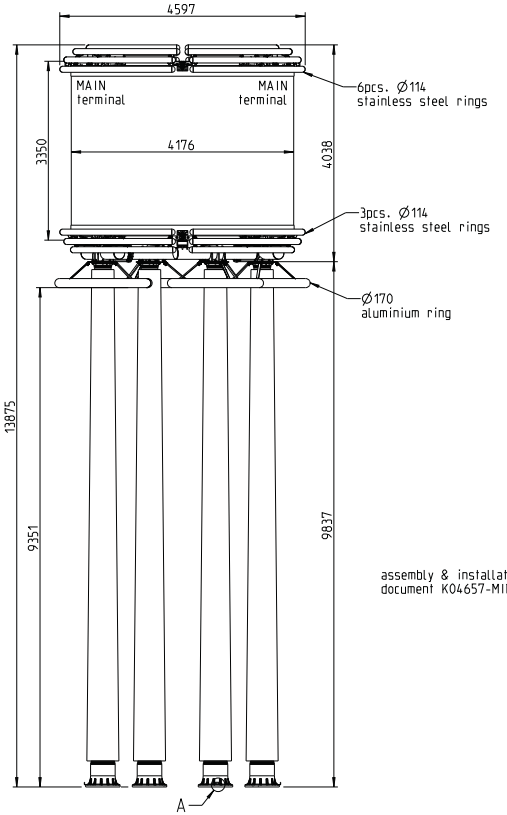

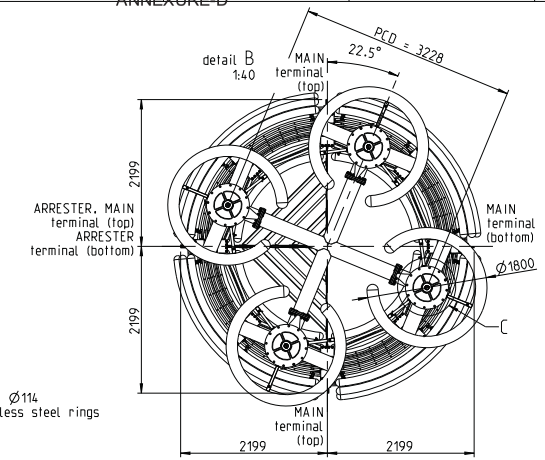

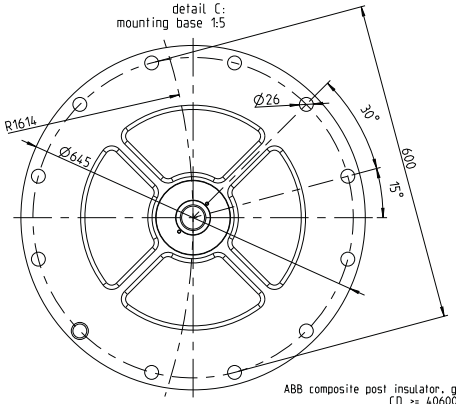

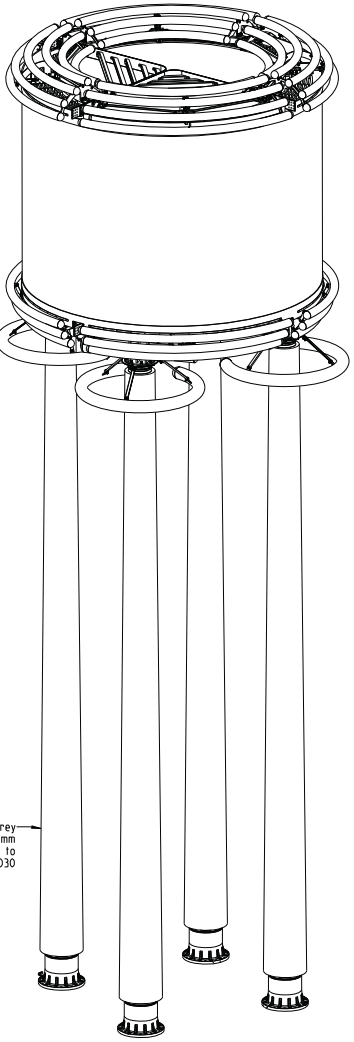

assembly & installation according to document K04657-MIN030

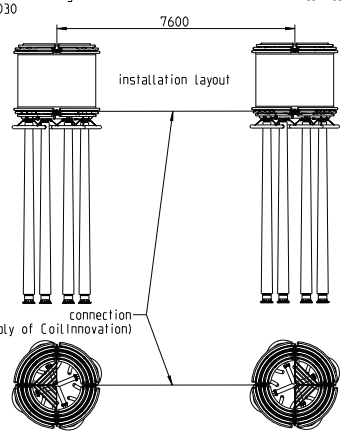

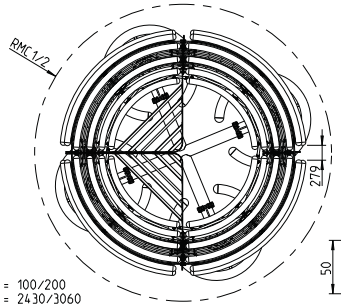

HMC1/2 = 100/200
RMC1/2 = 2430/3060

min. center-to-center spacing (Dcc)= 7600 mm

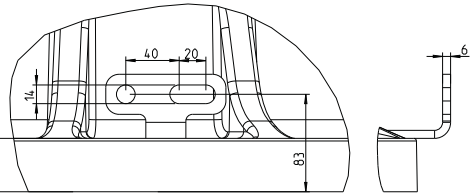

serial number 09-16
serial number 17: common spare without support structure and insulator, incl. corona equipment

technical data:	
nom. direct voltage to earth	800 kV
max. cont. dc operating voltage to earth	812 kV
max. cont. ac operating voltage to earth	n.a. kV
LIWL (across/phase to ground)	1300/1989 kV
SIWL phase to ground	1641 kV
rated inductance	75 mH
coils per reactor / pole	1 / 2
nominal direct current	1875 A
max. continuous direct current (at 50°C)	2076 A
max. continuous direct current (at 33°C)	2316 A
max. continuous current spectrum	100Hz 134.49 A
	150Hz 12.22 A
	250Hz 8.27 A
	300Hz 35.69 A
	600Hz 24.04 A
	2400Hz 11.89 A
mechanical short time current, peak	18 kA
reactor weight	19000 kg
coronaring weight	990 kg
support insulator weight	4200 kg
total weight	23200 kg

KEY PLAN:-

NOTES:-
1. ALL DIMENSIONS ARE IN MILLIMETERS UNLESS SPECIFIED OTHERWISE.
2. ALL REFERENCE DRAWINGS SHALL BE ALONG WITH THE REFERENCE TO THE PREVIOUS REVISION.

LEGEND:-

REFERENCE DRAWINGS:-

magnetic clearance:
The space within the magnetic clearance contour, prescribed by RMC1 and HMC1 shall not contain metallic parts. For larger metallic structures, such as concrete rebar, grounding wiring and fencing the distances RMC2 and HMC2 should be kept. Conductive loops surrounding the reactor in most cases should be avoided and electrical clearances to conductive parts must be maintained. Special attention should be paid to the proper functioning of electric devices in the vicinity of the reactor such as in accordance with EN 61000-6.

tolerances
0-500 3%
500-2000 2%
>2000 1%

terminals:
do not use the terminals as supports for the connecting bus work! for max. loads see instruction manual.

surface treatment:
RTV silicone coating (on winding surface)
RAL7040, grey

EQUIPMENT GROUP: EQ.005

DOCUMENT KIND: Outline Drawing

ITEM DESIGNATION: =P(1,2,3,4).WP.L(1,2)

STATION NAME: Raigarh Station

CONTRACT NO. 4571723259

CLIENT: Power Grid Corporation Of India Ltd. (A Govt.Of India Enterprise)

REV.	DATE	DESCRIPTION	REV.BY.	CHK.BY.	APPD.BY.
06	27.11.2017	coronaring for insulator Ø170mm (page 3)	PVK-Fm	PVK-Sg	PV-Ag
05	16.10.2017	changes due to customer request	PVK-Fm	PVK-Sg	PV-Ag
04	14.09.2017	insulator bottom flanges (thickness, PCD)	PVK-Fm	PVK-Sg	PV-Ag
03	04.09.2017	drawing cleanup	PVK-Fm	PVK-Sg	PV-Ag

ABB HVDC

BHARAT HEAVY ELECTRICALS LTD. TRANSMISSION BUSINESS GROUP

A-4070 Ettending
Nikola-Tesla-Straße 1
T: +43(0)7272 75200

PAPER SIZE-A1

PROJECT: ± 800 KV, 6000MW HVDC RAIGARH-PUGALUR TERMINALS

SPEC. NO.: IJNL372326,E

TITLE: Pole Smoothing Reactors DCH-75/1880/1300/1989

DWG. NO. K04657-M0100

Scale 1 : 50

Total Sh. 3

Sheet 3 of 3

We reserve all rights in this document and in the information contained there in. Reproduction, use or disclosure to third parties without express authority is strictly forbidden © ABB.

ANNEXURE-D

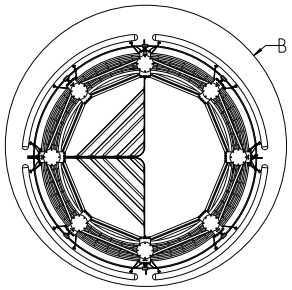

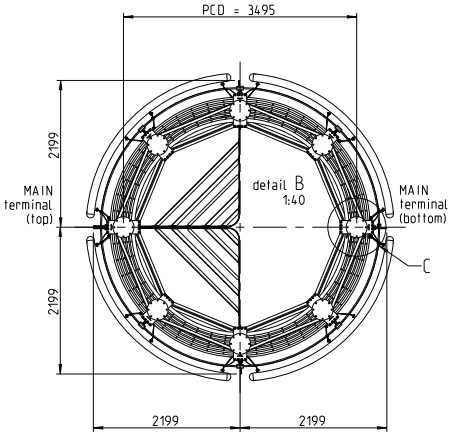

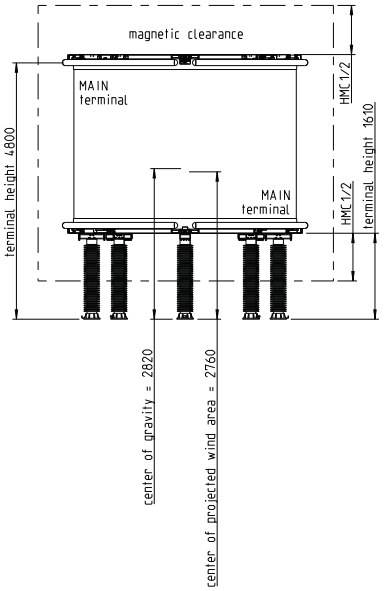

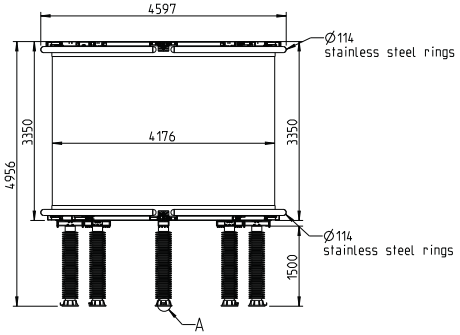

detail C
mounting base 1:5

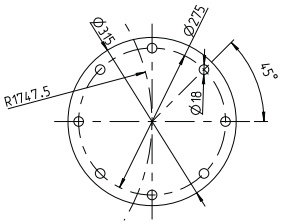

thickness = 18

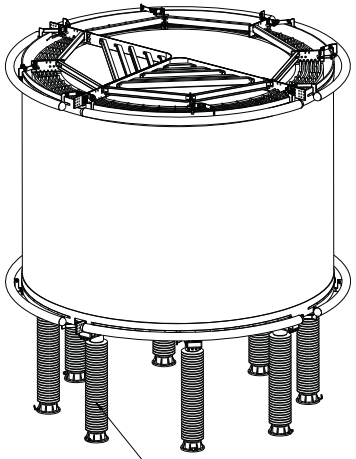

LAPP porcelain post insulator, brown
C30-550-I, CD >= 2770mm
technical data: K04657-TDS020

assembly & installation according to
document K04657-MIN010

detail A
earthing terminal 1:2

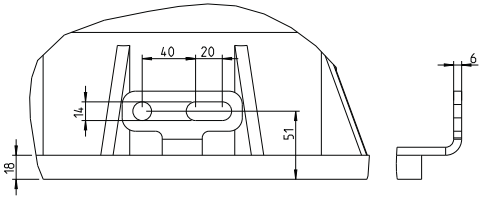

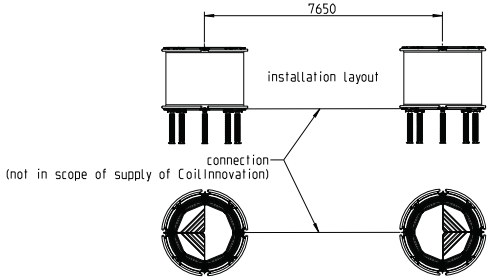

serial number 18-25

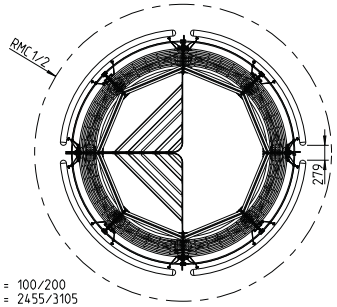

HMC1/2 = 100/200
RMC1/2 = 2455/3105

min. center-to-center spacing (Dcc)= 7650 mm

technical data:	
nom. direct voltage to earth	n.a kV
max. cont. dc operating voltage to earth	0 kV
max. cont. ac operating voltage to earth	45 kV
LIWL (across/phase to ground)	1300/504 kV
SIWL phase to ground	490 kV
rated inductance	75 mH
coils per reactor / pole	1 / 2
nominal direct current	1875 A
max. continuous direct current (at 50°C)	2076 A
max. continuous direct current (at 33°C)	2316 A
max. continuous current spectrum	100Hz 134.71 A 150Hz 12.75 A 250Hz 8.44 A 300Hz 35.67 A 600Hz 25.1 A 2400Hz 14.09 A
mechanical short time current, peak	18 kA
reactor weight	16550 kg
coronaring weight	200 kg
support insulator weight	970 kg
total weight	17720 kg

KEY PLAN:-

NOTES:-
1. ALL DIMENSIONS ARE IN MILLIMETERS UNLESS SPECIFIED OTHERWISE.
2. ALL REFERENCE DRAWINGS SHALL BE ALONG WITH THE REFERENCE TO THE PREVIOUS REVISION.

LEGEND:-

REFERENCE DRAWINGS:-

tolerances
0-500 3%
500-2000 2%
>2000 1%

terminals:
do not use the terminals as supports for the connecting bus work! for max. loads see instruction manual.

surface treatment:
RTV silicone coating
(on winding surface)
RAL7040, grey

magnetic clearance:
The space within the magnetic clearance contour, prescribed by RMC1 and HMC1 shall not contain metallic parts. For larger metallic structures, such as concrete rebar, grounding wiring and fencing the distances RMC2 and HMC2 should be kept. Conductive loops surrounding the reactor in most cases should be avoided and electrical clearances to conductive parts must be maintained. Special attention should be paid to the proper functioning of electric devices in the vicinity of the reactor such as in accordance with EN 61000-6.

We reserve all rights in this document and in the information contained there in. Reproduction, use or disclosure to third parties without express authority is strictly forbidden © ABB.

EQUIPMENT GROUP: EQ.005

DOCUMENT KIND: Outline Drawing

ITEM DESIGNATION: =P(1,2,3,4).WN.L(1,2)

STATION NAME: Pugalur Station

CONTRACT NO. 4571723394

CLIENT: Power Grid Corporation Of India Ltd. (A Govt.Of India Enterprise)

REV.	DATE	DESCRIPTION	REV.BY.	CHK.BY.	APPD.BY.
07	27.11.2017	coronaring for insulator Ø170mm (page 3)	PVK-Fm	PVK-Sg	PV-Ag
06	06.11.2017	insulator PCDs corrected (sheet 2 and 4)	PVK-Fm	PVK-Sg	PV-Ag
05	16.10.2017	changes due to customer request	PVK-Fm	PVK-Sg	PV-Ag
04	14.09.2017	insulator bottom flanges (thickness, PCD)	PVK-Fm	PVK-Sg	PV-Ag

ABB HVDC

BHARAT HEAVY ELECTRICALS LTD. TRANSMISSION BUSINESS GROUP

A-4070 Eferding
Nikola-Tesla-Straße 1
T: +43017272 75200

PAPER SIZE-A1

PROJECT: ± 800 KV, 6000MW HVDC RAIGARH-PUGALUR TERMINALS

Scale 1 : 50

SPEC. NO.: IJNL372326,E

TITLE: Neutral Smoothing Reactors DCH-75/1880/1300/504

Total Sh. 4

DWG. NO. K04657-M0200

Sheet 2 OF 4

ANNEXURE D

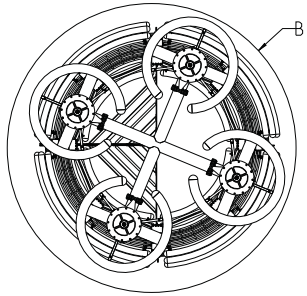

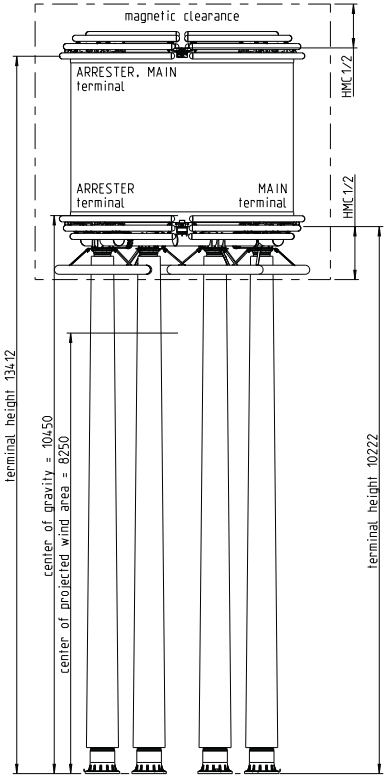

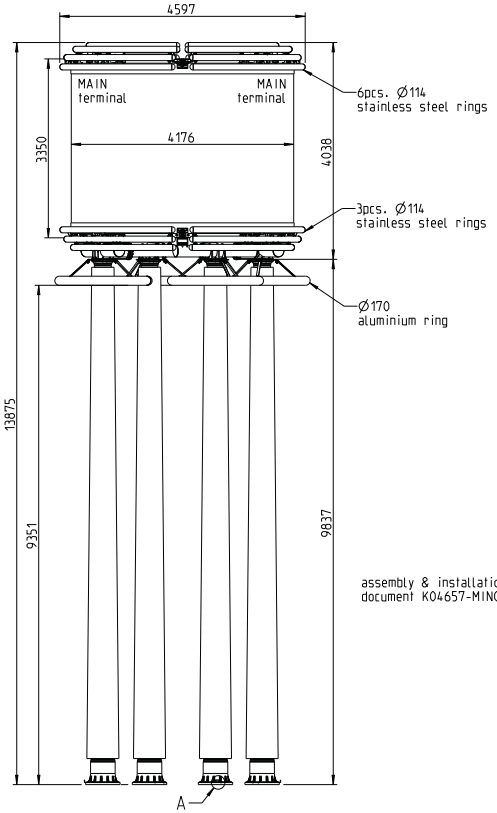

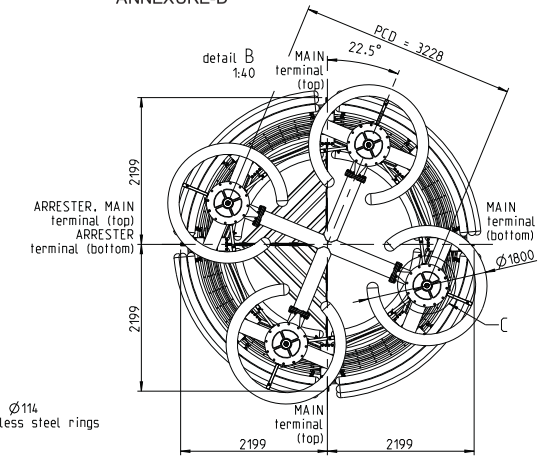

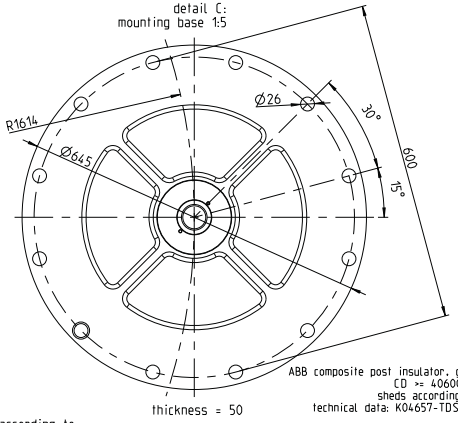

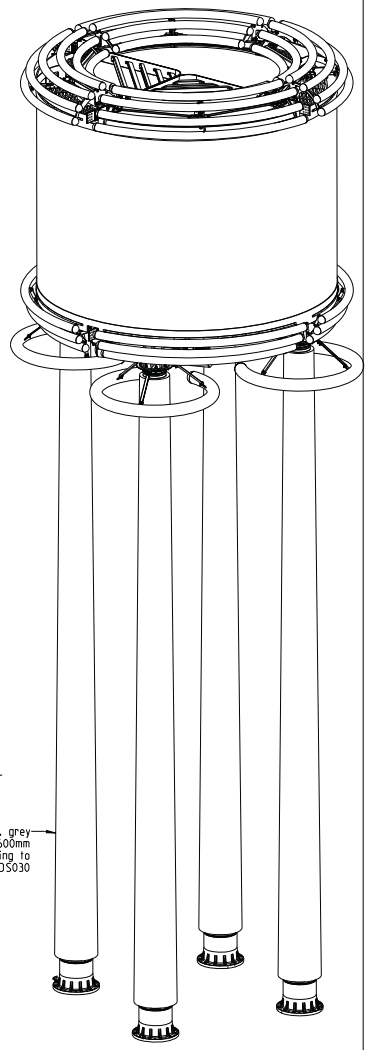

assembly & installation according to document K04657-MIN030

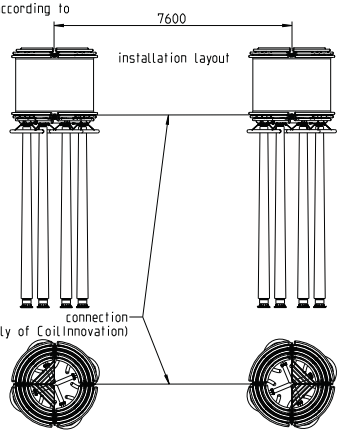

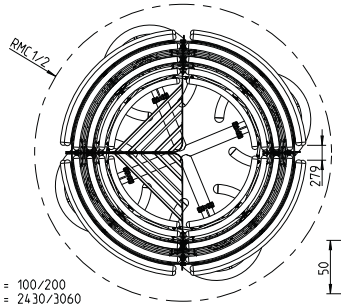

HMC1/2 = 100/200
RMC1/2 = 2430/3060

min. center-to-center spacing (Dcc)= 7600 mm

detail A
earthing terminal 1:2

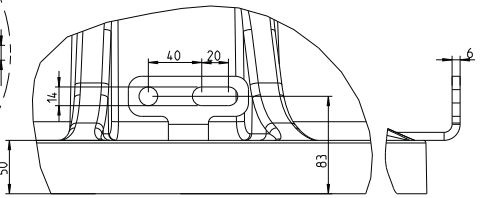

serial number 26-33
serial number 38: common spare without support structure and insulator, incl. corona equipment

technical data:		
nom. direct voltage to earth		800 kV
max. cont. dc operating voltage to earth		812 kV
max. cont. ac operating voltage to earth		n.a. kV
LIWL (across/phase to ground)		1300/1989 kV
SIWL phase to ground		1641 kV
rated inductance		75 mH
coils per reactor / pole		1 / 2
nominal direct current		1875 A
max. continuous direct current (at 50°C)		2076 A
max. continuous direct current (at 33°C)		2316 A
max. continuous current spectrum	100Hz	134.49 A
	150Hz	12.22 A
	250Hz	8.27 A
	300Hz	35.69 A
	600Hz	24.04 A
	2400Hz	11.89 A
mechanical short time current, peak		18 kA
reactor weight		18010 kg
coronaring weight		990 kg
support insulator weight		4200 kg
total weight		23200 kg

KEY PLAN:-

NOTES:-
1. ALL DIMENSIONS ARE IN MILLIMETERS UNLESS SPECIFIED OTHERWISE.
2. ALL REFERENCE DRAWINGS SHALL BE ALONG WITH THE REFERENCE TO THE PREVIOUS REVISION.

LEGEND:-

REFERENCE DRAWINGS:-

tolerances
0-500 3%
500-2000 2%
>2000 1%

terminals:
do not use the terminals as supports for the connecting bus work! for max. loads see instruction manual.

surface treatment:
RTV silicone coating (on winding surface)
RAL7040, grey

magnetic clearance:
The space within the magnetic clearance contour, prescribed by RMC1 and HMC1 shall not contain metallic parts. For larger metallic structures, such as concrete rebar, grounding wiring and fencing the distances RMC2 and HMC2 should be kept. Conductive loops surrounding the reactor in most cases should be avoided and electrical clearances to conductive parts must be maintained. Special attention should be paid to the proper functioning of electric devices in the vicinity of the reactor such as in accordance with EN 61000-6.

We reserve all rights in this document and in the information contained there in. Reproduction, use or disclosure to third parties without express authority is strictly forbidden © ABB.

EQUIPMENT GROUP: EQ.005

DOCUMENT KIND: Outline Drawing

ITEM DESIGNATION: =P(1,2,3,4).WP.L(1,2)

STATION NAME: Pugalur Station

CONTRACT NO. 4571723394

CLIENT: Power Grid Corporation Of India Ltd. (A Govt.Of India Enterprise)

REV.	DATE	DESCRIPTION	REV.BY.	CHK.BY.	APPD.BY.
07	27.11.2017	coronaring for insulator Ø170mm (page 3)	PVK-Fm	PVK-Sg	PV-Ag
06	06.11.2017	insulator PCDs corrected (sheet 2 and 4)	PVK-Fm	PVK-Sg	PV-Ag
05	16.10.2017	changes due to customer request	PVK-Fm	PVK-Sg	PV-Ag
04	14.09.2017	insulator bottom flanges (thickness, PCD)	PVK-Fm	PVK-Sg	PV-Ag

ABB HVDC

BHARAT HEAVY ELECTRICALS LTD. TRANSMISSION BUSINESS GROUP

A-4070 Eferding
Nikola-Tesla-Straße 1
T: +43(0)7272 75200

PAPER SIZE-A1

PROJECT: ± 800 KV, 6000MW HVDC RAIGARH-PUGALUR TERMINALS

Scale 1 : 50

SPEC. NO.: IJNL372326,E

TITLE: Pole Smoothing Reactors DCH-75/1880/1300/1989

Total Sh. 4

DWG. NO. K04657-M0200

Sheet 3 of 4

ANNEXURE-D

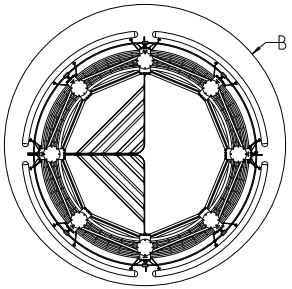

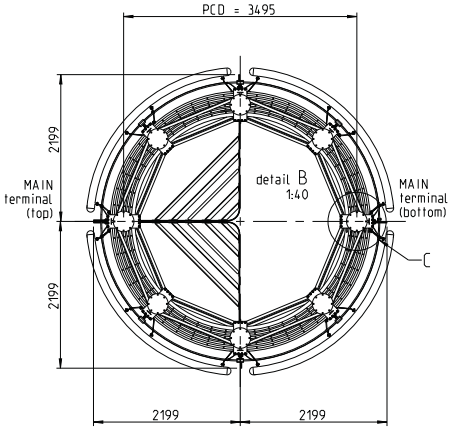

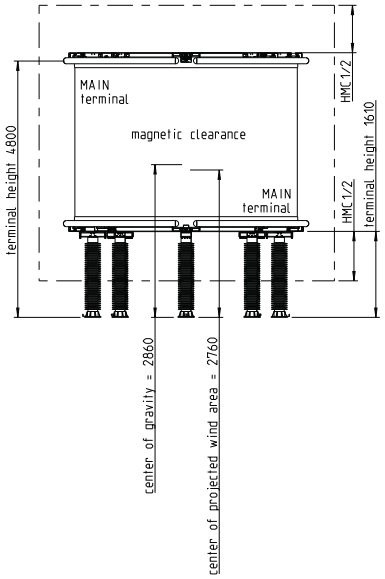

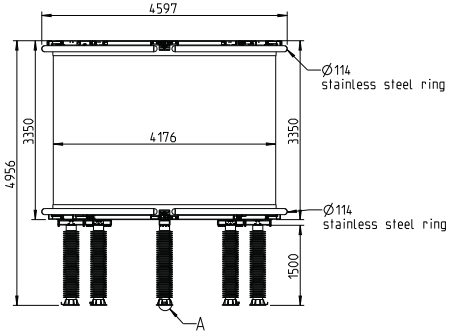

detail mounting base 1:5

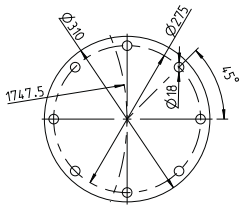

thickness = 15

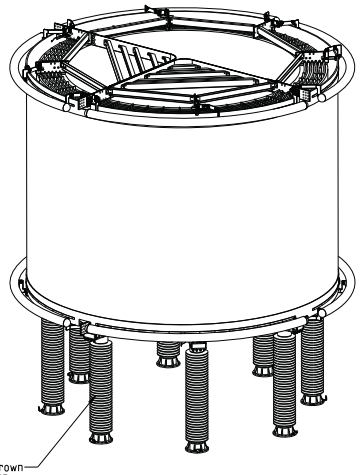

LAPP porcelain post insulator, brown
C16-550-11, CD >= 2935mm
technical data: K04657-TDS050

detail A
earthing terminal 1:2

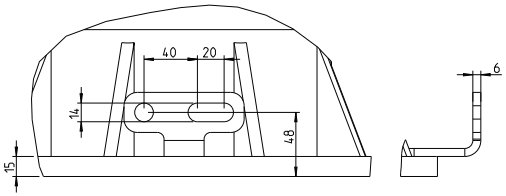

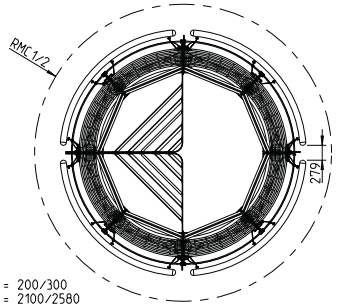

HMC1/2 = 200/300
RMC1/2 = 2100/2580

technical data:	
nom. direct voltage to earth	n.a kV
max. cont. dc operating voltage to earth	0 kV
max. cont. ac operating voltage to earth	15 kV
LIWL (across/phase to ground)	1300/504 kV
SIWL phase to ground	490 kV
rated inductance	75 mH
coils per reactor / pole	1 / 1
nominal direct current	1875 A
max. continuous direct current (at 50°C)	2076 A
max. continuous direct current (at 33°C)	2316 A
max. continuous current spectrum	50Hz 139.0 A 100Hz 35.85 A 150Hz 3.1 A 300Hz 0.98 A
mechanical short time current, peak	18 kA
reactor weight	16550 kg
coronaring weight	200 kg
support insulator weight	650 kg
total weight	17400 kg

serial number 34-37

KEY PLAN:-

NOTES:-
1. ALL DIMENSIONS ARE IN MILLIMETERS UNLESS SPECIFIED OTHERWISE.
2. ALL REFERENCE DRAWINGS SHALL BE ALONG WITH THE REFERENCE TO THE PREVIOUS REVISION.

LEGEND:-

REFERENCE DRAWINGS:-

tolerances
0-500 3%
500-2000 2%
>2000 1%

terminals:
do not use the terminals as supports for the connecting bus work! for max. loads see instruction manual.

surface treatment:
RTV silicone coating (on winding surface)
RAL7040, grey

magnetic clearance:
The space within the magnetic clearance contour, prescribed by RMC1 and HMC1 shall not contain metallic parts. For larger metallic structures, such as concrete rebar, grounding wiring and fencing the distances RMC2 and HMC2 should be kept. Conductive loops surrounding the reactor in most cases should be avoided and electrical clearances to conductive parts must be maintained. Special attention should be paid to the proper functioning of electric devices in the vicinity of the reactor such as in accordance with EN 61000-6.

We reserve all rights in this document and in the information contained there in. Reproduction, use or disclosure to third parties without express authority is strictly forbidden © ABB.

EQUIPMENT GROUP: EQ.005

DOCUMENT KIND: Outline Drawing

ITEM DESIGNATION: =P(1,2,3,4).WN.L3

STATION NAME: Pugalur Station

CONTRACT NO. 4571723394

CLIENT: Power Grid Corporation Of India Ltd. (A Govt.Of India Enterprise)

REV.	DATE	DESCRIPTION	REV.BY.	CHK.BY.	APPD.BY.
07	27.11.2017	coronaring for insulator Ø170mm (page 3)	PVK-Fm	PVK-Sg	PV-Ag
06	06.11.2017	insulator PCDs corrected (sheet 2 and 4)	PVK-Fm	PVK-Sg	PV-Ag
05	16.10.2017	changes due to customer request	PVK-Fm	PVK-Sg	PV-Ag
04	14.09.2017	insulator bottom flanges (thickness, PCD)	PVK-Fm	PVK-Sg	PV-Ag

ABB HVDC

BHARAT HEAVY ELECTRICALS LTD. TRANSMISSION BUSINESS GROUP

A-4070 Ettending
Nikola-Tesla-Straße 1
T: +43(0)7272 75200

PAPER SIZE-A1

PROJECT
± 800 KV, 6000MW HVDC
RAIGARH-PUGALUR TERMINALS

Scale 1 : 50

SPEC. NO.: IJNL372326,E

TITLE: Blocking Filter Reactors DCH-75/1880/1300/504

Total Sh. 4

DWG. NO. K04657-M0200

Sheet 4 OF 4

ANNEXURE-E

The method statement for Pole bushing removal for Raigarh station is shown in the below 3D model snapshot.

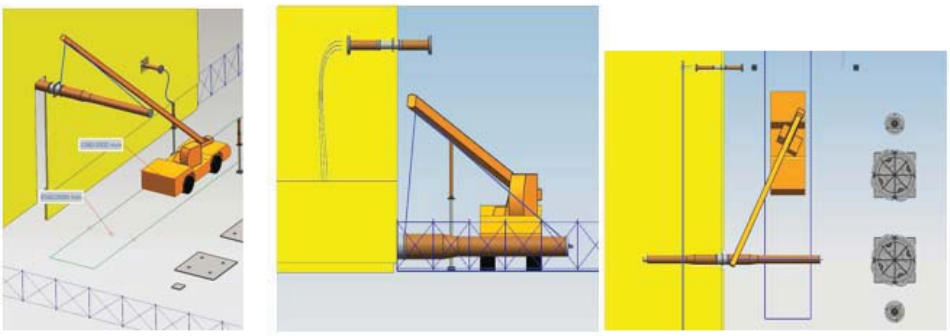

Fig. 1

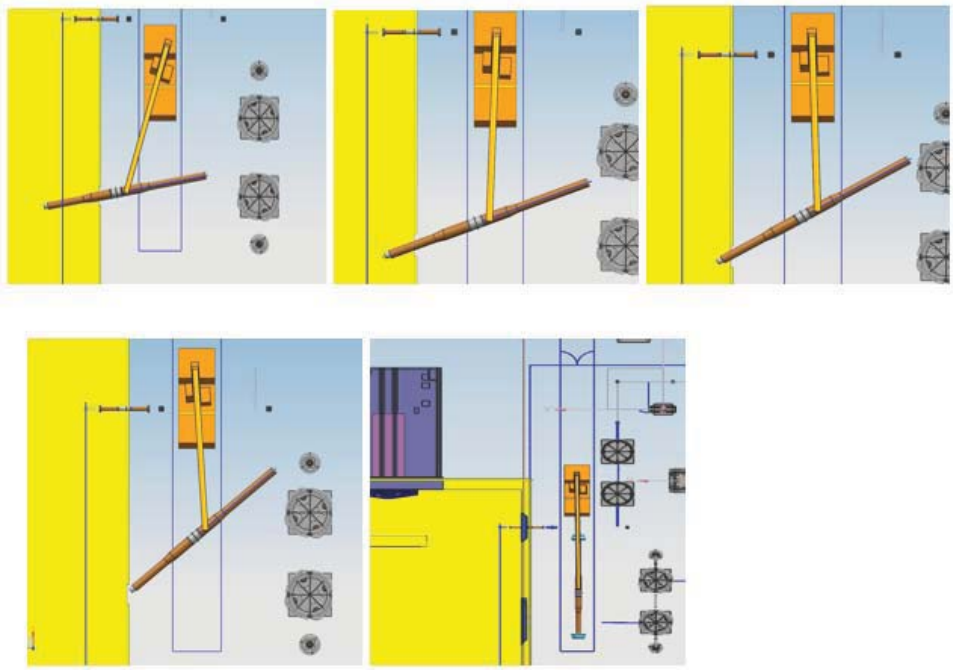

Fig. 2

Installation and maintenance guide document shall be followed.

Maintenance tools:

1. Soft slings, minimum 4000 kg, length according to Fig. 8, and crane for sufficient lifting Height and weight.
2. Counter weight with adjustable load up to 250 kg and fixation device is needed.
3. Boom lift of sufficient height and weight to reach the Pole bushing.

ANNEXURE-E

Sequence of Dismantling:

1. Remove the section of the neutral bus bar below pole bushing inside Valve hall.
2. Remove terminal connections of pole bushing inside and outside.
3. Remove the Earthing connection of the pole bushing.
4. Remove the Corona ball at both ends.
5. Use clean, soft slings around the intermediate flange and the outdoor top end. see Fig.8
6. To achieve the correct mounting angle, a counter weight can be applied to compensate the different centers of gravity. For more details refer Installation manual.
7. Remove the fasteners from the adaptor plate of the pole bushing after attaching the lifting tools.
8. Adjust the counter weight so the bushing is horizontal, before removing from the wall. The maximum load on the counter weight is 250 kg.
9. Bring down the bushing to the floor level.
10. Rotate Bushing by 10deg and pull out by 2000mm in 4 steps as shown in fig.1
11. By following the above procedure, the bushing is completely pulled out from the valve hall.
12. Bushing is ready for replacement/transportation.

CAUTION
Be careful not to damage the silver plated contact surface when attaching the slings.

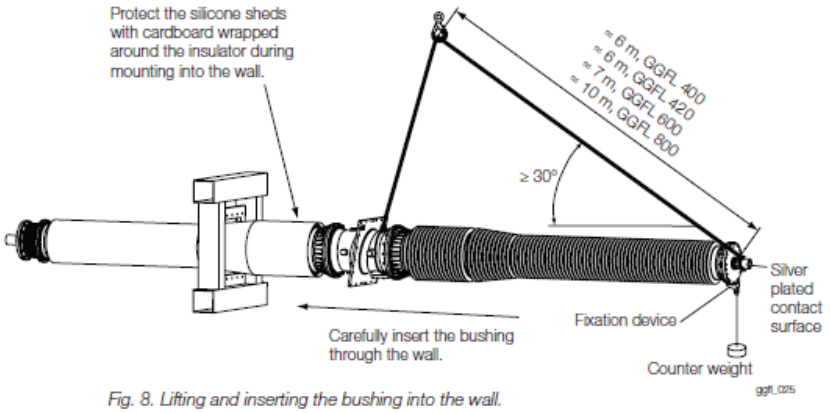

Fig. 8. Lifting and inserting the bushing into the wall.

ANNEXURE-E

The method statement for Pole bushing removal for Pugalur station is shown in the below 3D model snapshot.

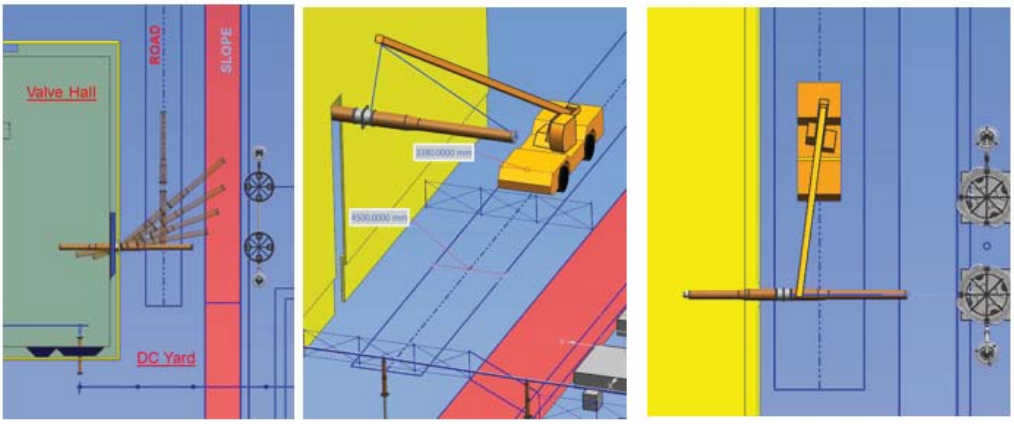

Fig. 3

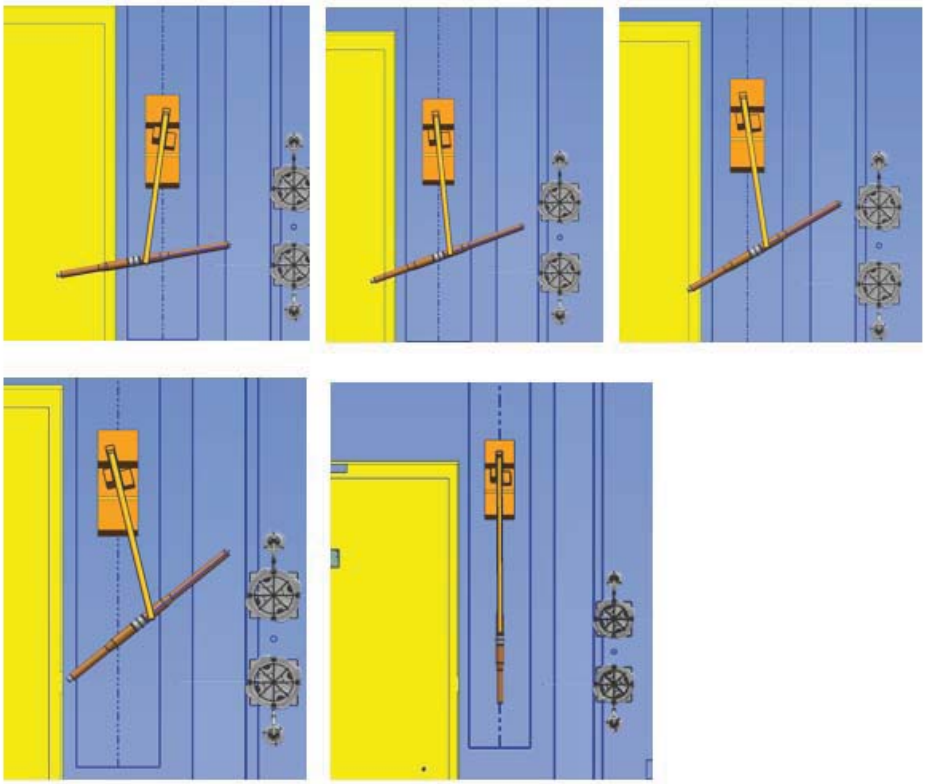

Fig. 4

Installation and maintenance guide document shall be followed.

ANNEXURE-E

Maintenance tools:

1. Soft slings, minimum 4000 kg, length according to Fig. 8, and crane for sufficient lifting Height and weight.
2. Counter weight with adjustable load up to 250 kg and fixation device is needed.
3. Boom lift of sufficient height and weight to reach the Pole bushing.

Sequence of Dismantling:

1. Remove the Fence, if needed.
2. Remove terminal connections of pole bushing inside and outside.
3. Remove the Earthing connection of the pole bushing.
4. Remove the Corona ball to be at both ends.
5. Use clean, soft slings around the intermediate flange and the outdoor top end. see Fig.8
6. To achieve the correct mounting angle, a counter weight can be applied to compensate the different centers of gravity. For more details refer Installation manual.
7. Remove the fasteners from the adaptor plate of the pole bushing after attaching the lifting tools.
8. Adjust the counter weight so the bushing is horizontal, before removing from the wall. The maximum load on the counter weight is 250 kg.
9. Bring down the bushing to the floor level.
10. Rotate Bushing by 10deg and pull out by 2000mm in 4 steps as shown in fig.3&4.
11. By following the above procedure, the bushing is completely pulled out from the valve hall.
12. Bushing is ready for replacement/transportation.

Record of Review – Document Comment Sheet

Appendix 1

DC Filter Reactor maintenance for Raigarh and Pugalur Stations:

The maintenance of DC Filter Reactors for Pole 2 and 3 of Raigarh and Pugalur Stations are presented below. The maintenance of DC Filter Reactors for Pole 1 and 4 Reactors can be done in the similar way.

1. Crane shall be capable to lift 5MT within 15M radius from boom rotation point. (Crane HUSKY-620 or similar)
2. Before entering the dc filter the boom angle should be kept at 0 degree to avoid interference with neutral bus (fig. 1)
3. After entering into dc filter area the boom angle shall be carefully adjusted to avoid interferences with the dc filter equipment's. (fig. 2)
4. Remove the aluminium tube near the reactors shown in dotted lines in fig. 4
5. Remove all the reactor terminals connections with a boom lift/man lift.
6. Keep a basket to store dismantled bolt, nut and washers.
7. The manufacturer's assembly and Installation document shall be followed to dismantle the reactors.
8. The preferable space to locate the replaced reactor is shown in fig. 4.

ANNEXURE-F

Project: ± 800 kV, 6000MW HVDC Raigarh – Pugalur Terminals

Document id: 1JNL100485-396–RoR Rev.00

Record of Review – Document Comment Sheet

Fig.1

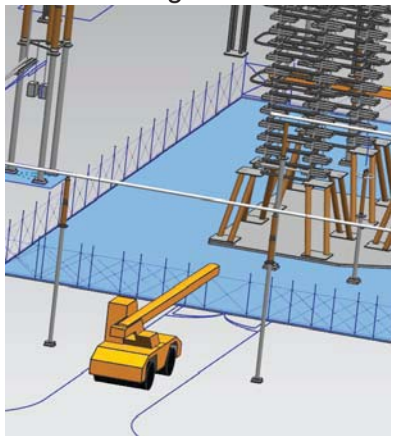

Fig.2

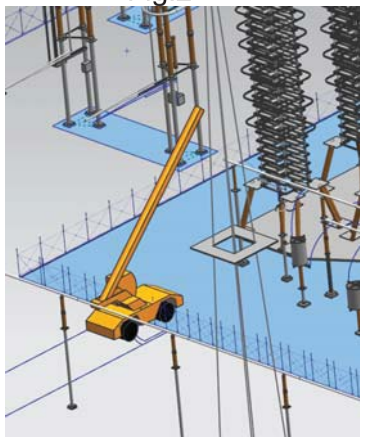

Fig.3

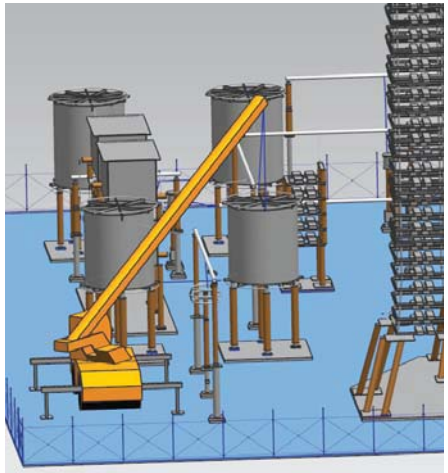

Fig.4

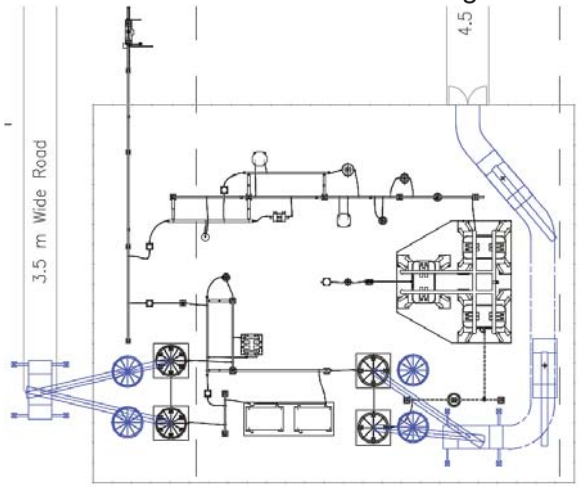

Project: ± 800 kV, 6000MW HVDC Raigarh – Pugalur Terminals

Document id: 1JNL100485-396–RoR Rev.00

Record of Review – Document Comment Sheet

HV DC Filter capacitor maintenance for Raigarh and Pugalur Stations:

The maintenance of HV DC Filter Capacitors for all poles of Raigarh and Pugalur Stations are presented below.

1. Remove the neutral bus bar shown in dotted lines (fig 6) for the crane entry and boom lift/man lift movement.
2. Crane shall be capable to lift 2MT within 8M radius from boom rotation point. Crane shall be provided with lattice extension up to 8.80M. (HUSKY620 crane or similar).
3. The preferable positon of the crane to access all capacitor units are shown in fig.6.The lifting device shown in fig.7 from the capacitor manufacture shall be attached to the crane's lifting hook.
4. Use the man lift to reach the required height to dismantle of bolts and nuts of the capacitor unit and to maneuver the lifting device to reach the capacitor units.
5. The manufacturer's maintenance manual shall be followed to dismantle the capacitor units.

Fig.5

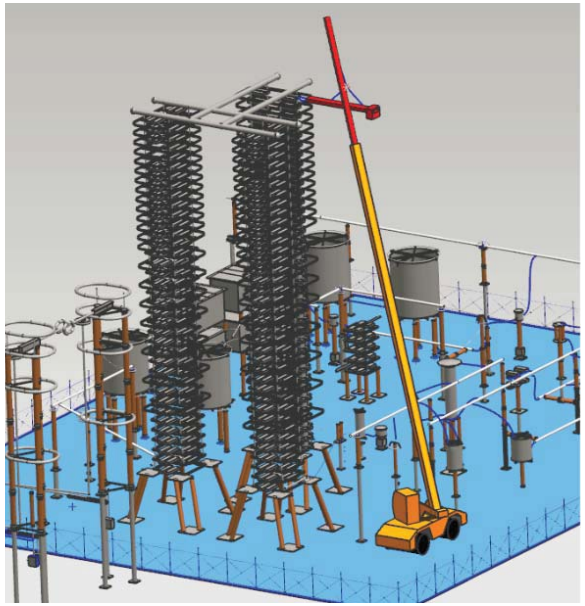

Fig.6

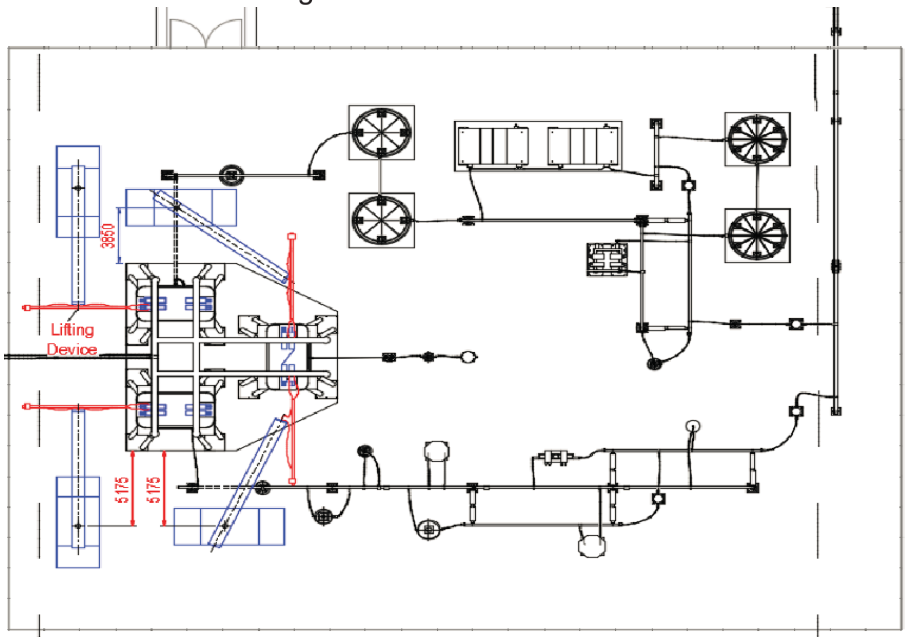

Fig.7

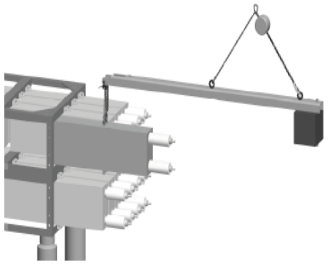

Record of Review – Document Comment Sheet

Appendix 1

Method Statement for DC Pole Smoothing Reactor Maintenance for Raigarh and Pugalur Stations:

The maintenance of Pole Smoothing Reactor of Pole 1 and 4 of Pugalur is given below. (Please note the maintenance of Pole Smoothing Reactors of Pole 2 and 3 can be performed in the similar way).

1. Remove all the Reactor terminals connections with a boom lift/man lift.
2. Keep a Basket to store dismantled bolt, nut and washers.
3. Remove the neutral bus bar for the crane entry.
4. Crane shall be capable to lift 20MT within 10M radius from boom rotation point for pole & Neutral Reactor. (RT-880 crane or similar, see Fig 1)
5. The Manufacturers assembly and Installation document shall be followed to dismantle the reactors.
6. The preferable space to locate the reactor is shown in Fig 2.

The maintenance of Pole Smoothing Reactors for Pole 2 and 3 of Raigarh is shown in Fig 3, 4 and 5. The maintenance of Pole Smoothing Reactors for Pole 1 and 4 can be performed in the similar way.

Fig.1

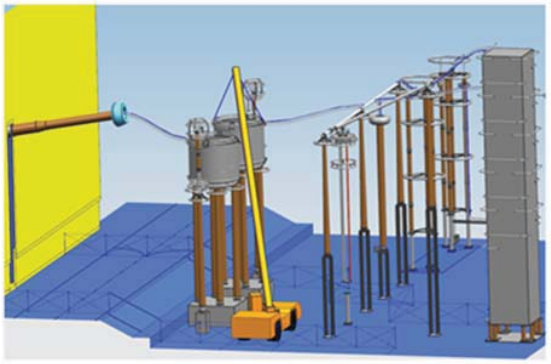

Fig 2

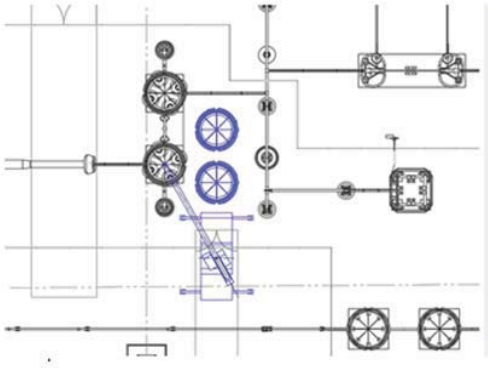

Fig.3

Fig.4

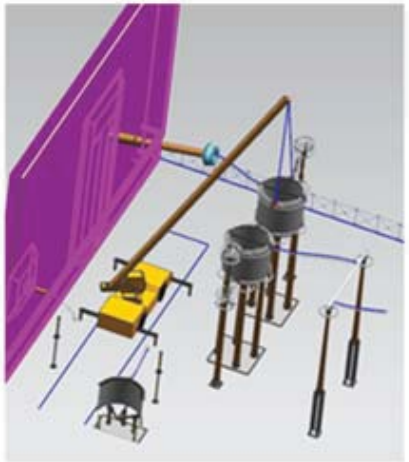

Fig.5

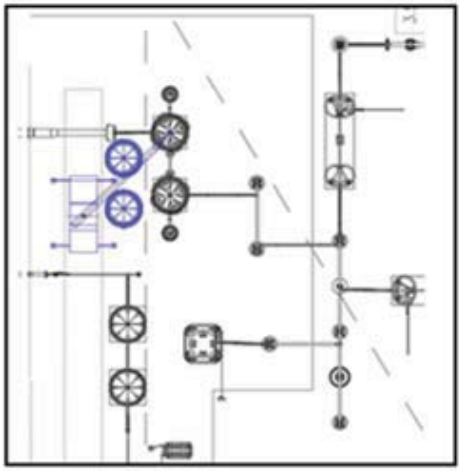

Method Statement for DC Neutral Smoothing Reactor Maintenance for Raigarh and Pugalur station:

The maintenance of Neutral Smoothing Reactor of Pole 1 and 2 of Pugalur is shown in Fig 6 and 7 and that of Pole 3 and 4 is shown in Fig 8.

1. Remove all the Reactor terminals connections with a boom lift.
2. Keep a Basket to store dismantled bolt, nut and washers.
3. Crane shall be capable to lift 20MT within 10M radius from boom rotation point for pole & Neutral Reactor. (RT-880 crane or similar)
4. The Manufacturers assembly and Installation document shall be followed to dismantle the reactors.
5. The preferable space to locate the reactor is shown in Fig 7.

The maintenance Neutral Smoothing Reactors of DC Pole 2 and 3 of Raigarh are shown in Fig 9, 10, 11. The maintenance of Neutral Smoothing Reactors of DC Pole 1 and 4 can be done in the similar way.

Record of Review – Document Comment Sheet

Fig.6

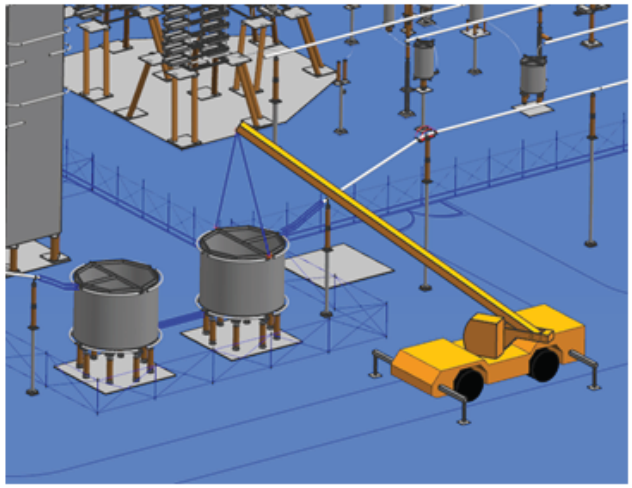

Fig.7

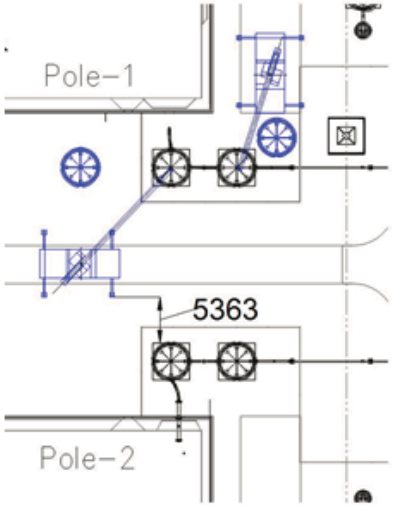

Fig.8

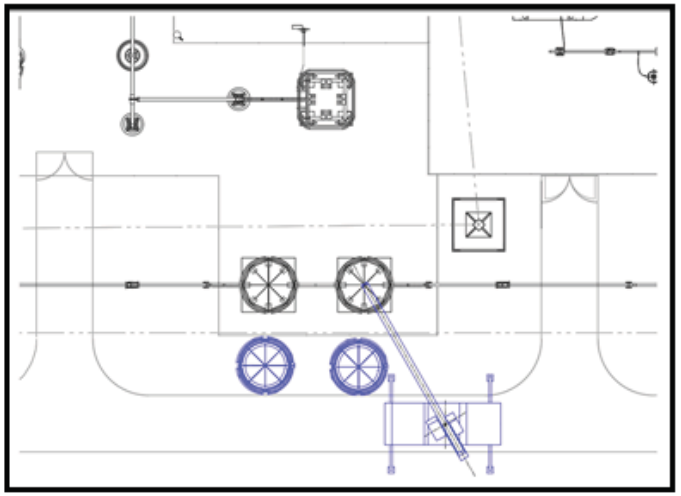

Fig.10

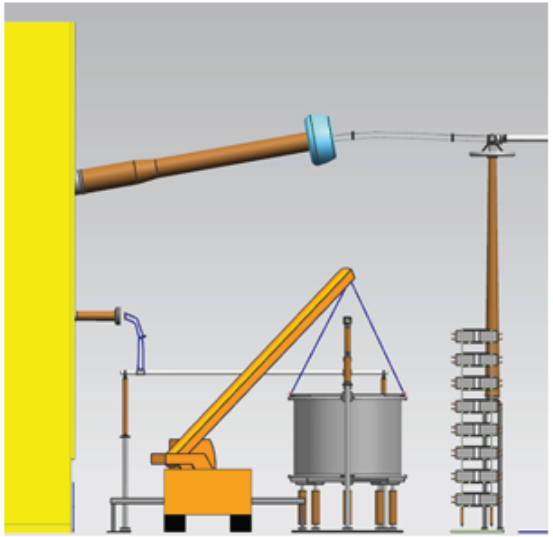

Fig.11

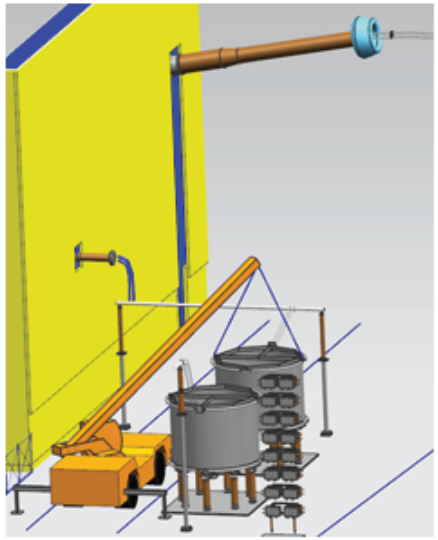

Fig.12

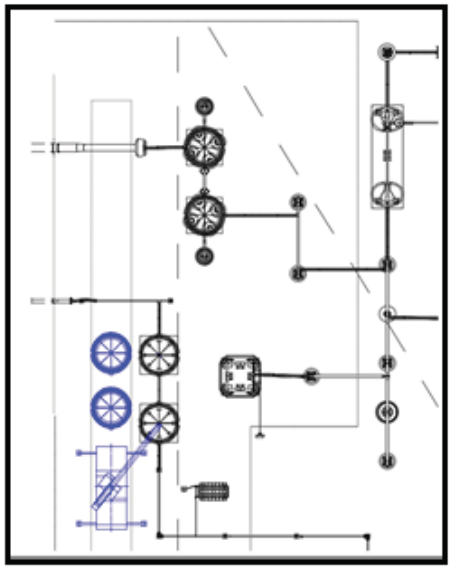

ANNEXURE-H (POLE-1)

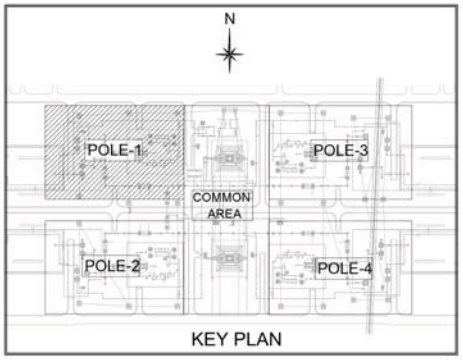

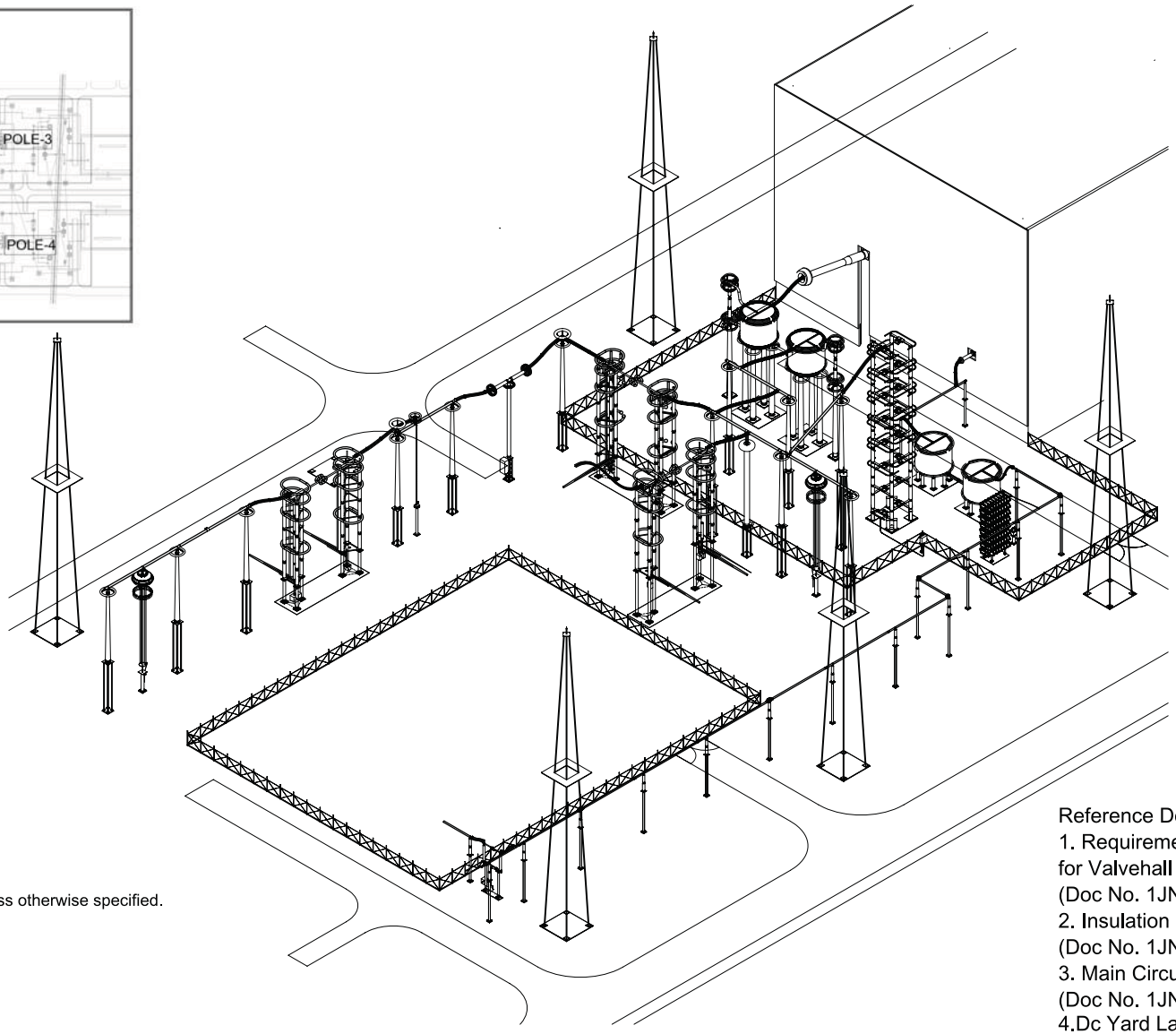

Notes:
1. All Dimensions are in mm unless otherwise specified.
2. Conductor Data
01 Pole Bus:
-Ø 250/226 mm Al.Tube
- Ø48.7mm AAC
Neutral Bus:
- Ø160/140mm Al.Tube
- Ø32.6mm ,AAC
01 Damping wire:
- Ø48.7mm AAC for Ø 250/226 mm Al.Tube (Length of damping wire Shall be 2/3 of the length of the bus bar)
- Ø29.0mm AAC for Ø160/140mm Al.Tube (Length of damping wire Shall be 2/3 of the length of the bus bar)

Reference Documents:
1. Requirement on the size of shielding and air Clearances for Valvehall and DC Yard
(Doc No. 1JNL449408)
2. Insulation Coordination
(Doc No. 1JNL434222)
3. Main Circuit Single Line Diagram, Raigarh
(Doc No. 1JNL434227)
4.Dc Yard Layout and section Overview
(Doc No. 1JNL100484-578)

Rev	Revision	Prepared	Approved	Date
01	Revision made are marked. Also refer last page for revision notes.	Ashwinn, Kumaran, D	Naik, Ashish	2018-06-29

Contract No: CC-CS/651-SR2/HVDC-3063/7G10/CA-I/5817-5821 dated 2017-01-25

Client: POWER GRID CORPORATION OF INDIA LIMITED (A Government of India Enterprise)

BHARAT HEAVY ELECTRICALS LTD. TRANSMISSION BUSINESS GROUP

Station Name: Raigarh

Classification No.: FJB-64

Based on: –

Prepared: Surendar, P 2018-01-09

Approved: Naik, Ashish 2018-01-12

Doc. Kind: Layout drawing

Project name: ±800kV, 6000MW HVDC Raigarh-Pugalur Terminals

Title: Pole1-Layout&Sections DC Yard

Status: Issued

Item designation: –

Resp dept: PGGI/DCHUBTPM

Rev ind: 01

Language: –

ABB AB - HVDC

Document number: 1JNL100484-534

Sheet/of: 1 / 11

(A2)

We reserve all rights in this document and in the information contained therein. Reproduction, use or disclosure to third parties without express authority is strictly forbidden. © ABB AB (SE)

This document is issued by means of a computerized system. The digitally stored original is electronically signed. The approved document has a more, cold signature than the printed copy. A manual signature is not required.

ANNEXURE-H (POLE-1)

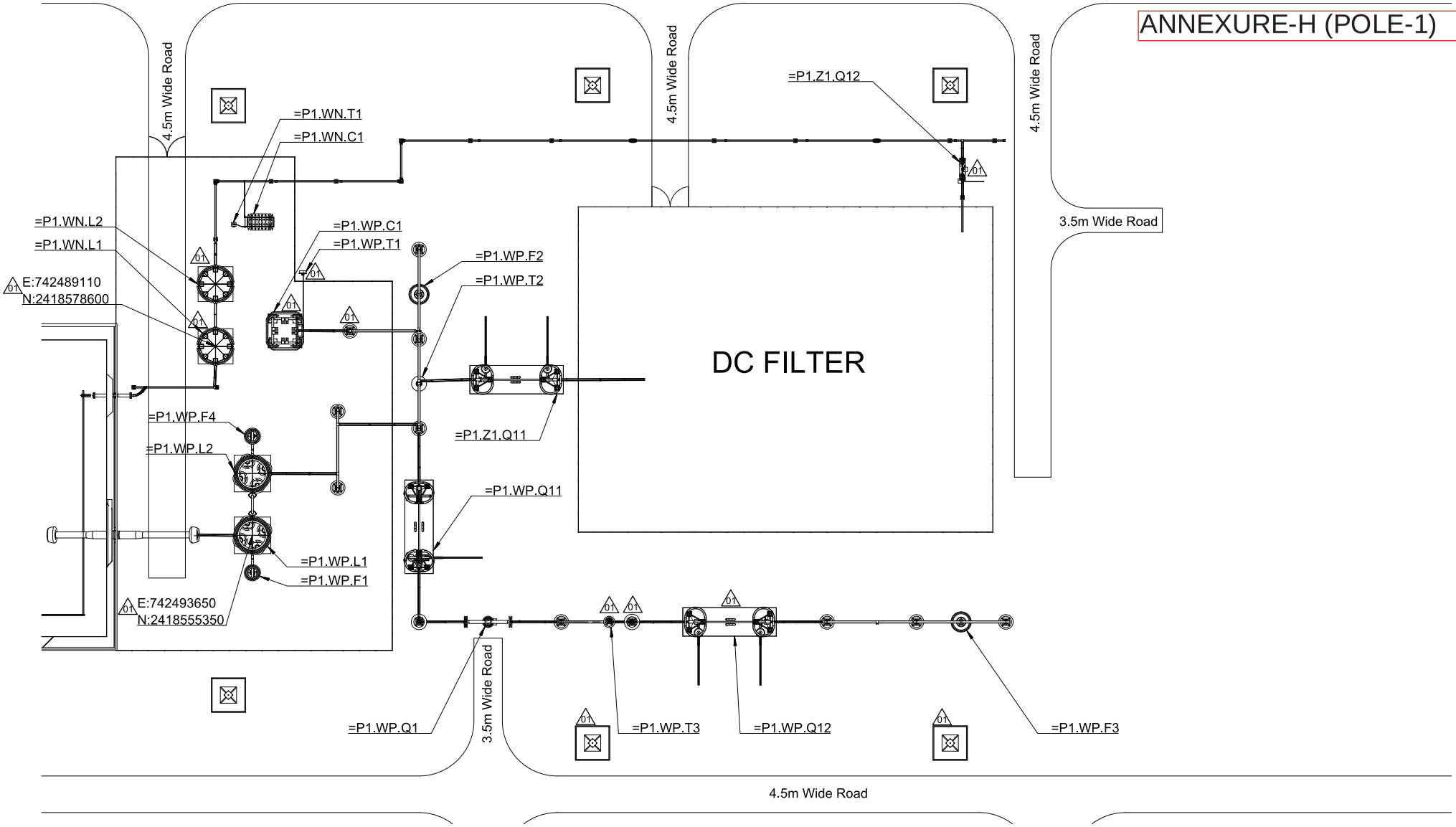

We reserve all rights in this document and in the information contained therein. Reproduction, use or disclosure to third parties without express authority is strictly forbidden. © ABB AB (SE)

This document is issued by means of a computerized system. The digitally stored original is electronically approved. The approved document has a more, cold signature than the hardcopies. A manual signature is not required.

Rev	Revision	Prepared	Approved	Date
01	Revision made are marked. Also refer last page for revision notes.	Ashwinn, Kumaran, D	Naik, Ashish	2018-06-29

Contract No: CC-CS/651-SR2/HVDC-3063/7G10/CA-I/5817-5821 dated 2017-01-25

Client:

POWER GRID CORPORATION OF INDIA LIMITED
(A Government of India Enterprise)

पावरग्रिड

BHARAT HEAVY ELECTRICALS LTD.
TRANSMISSION BUSINESS GROUP

Station Name: Raigarh

Classification No.: FJB-64

Based on: –

Prepared: Surendar, P 2018-01-09

Approved: Naik, Ashish 2018-01-12

Doc. Kind: Layout drawing

Project name: ±800kV, 6000MW HVDC Raigarh-Pugalur Terminals

Title: Pole1-Layout&Sections DC Yard

Status: Issued

Item designation: –

Resp dept: PGGI/DCHUBTPM

Rev ind: 01

Language: –

ABB AB - HVDC

Document number: 1JNL100484-534

Sheet/of: 2 / 11

(A2)

ANNEXURE-H (POLE-1)

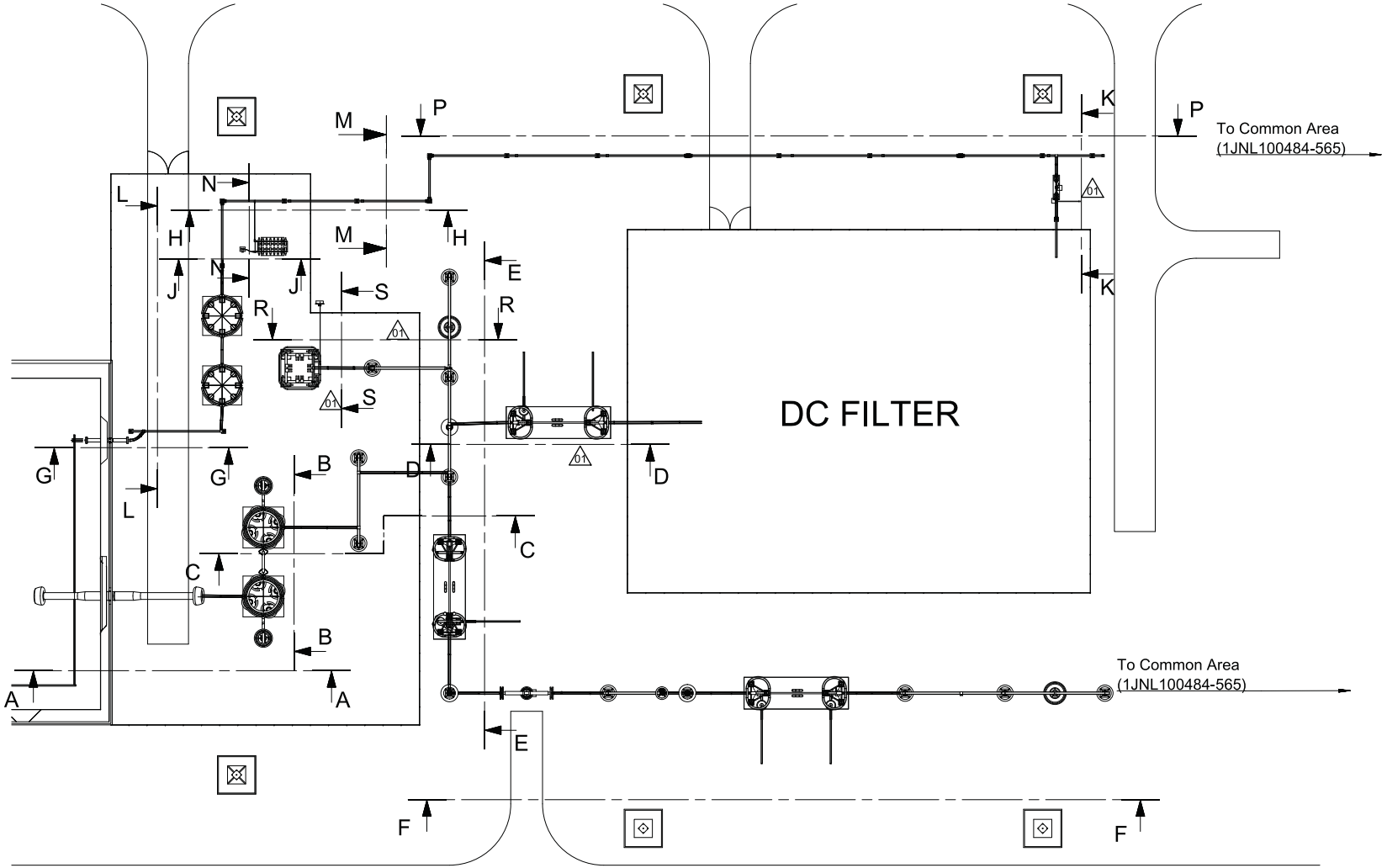

Note:
Section A-A See Sheet 04
Section B-B See Sheet 04

Section C-C See Sheet 05
Section D-D See Sheet 05
01 Section R-R See Sheet 05

Section E-E See Sheet 06

Section F-F See Sheet 07

Section G-G See Sheet 08
Section H-H See Sheet 08
Section J-J See Sheet 08

Section K-K See Sheet 09
Section L-L See Sheet 09
01 Section S-S See Sheet 09

Section M-M See Sheet 10
Section N-N See Sheet 10
Section P-P See Sheet 10

Rev	Revision	Prepared	Approved	Date
01	Revision made are marked. Also refer last page for revision notes.	Ashwinn, Kumaran, D	Naik, Ashish	2018-06-29

Contract No: CC-CS/651-SR2/HVDC-3063/7/G10/CA-I/5817-5821 dated 2017-01-25

Client:
POWER GRID CORPORATION OF INDIA LIMITED
(A Government of India Enterprise)

BHARAT HEAVY ELECTRICALS LTD. TRANSMISSION BUSINESS GROUP

Station Name: Raigarh
Classification No.: FJB-64

Based on: -
Prepared: Surendar, P 2018-01-09
Approved: Naik, Ashish 2018-01-12
Doc. Kind: Layout drawing

Project name: ±800kV, 6000MW HVDC Raigarh-Pugalur Terminals

Title: Pole1-Layout&Sections DC Yard
Status: Issued
Item designation: -
Resp dept: PGGI/DCHUBTPM
Rev ind: 01
Language: -

ABB AB - HVDC

Document number: 1JNL100484-534

Sheet/of: 3 / 11

We reserve all rights in this document and in the information contained therein. Reproduction, use or disclosure to third parties without express authority is strictly forbidden. © ABB AB, SE

This document is issued by means of a computerized system. The digitally stored original is electronically approved. The approved document has a name instead of a signature. The approved document is valid without a manual signature and is not signed.

(A2)

ANNEXURE-H (POLE-1)

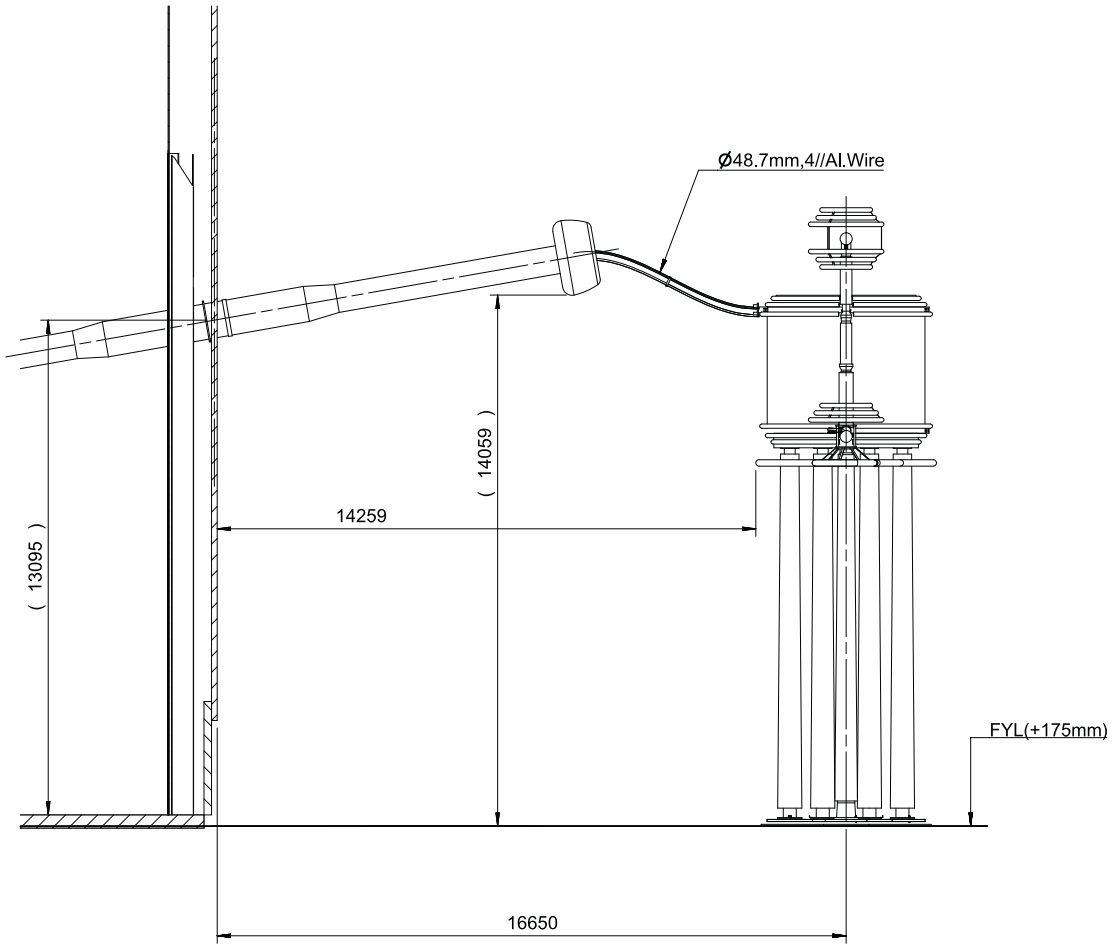

SECTION A-A

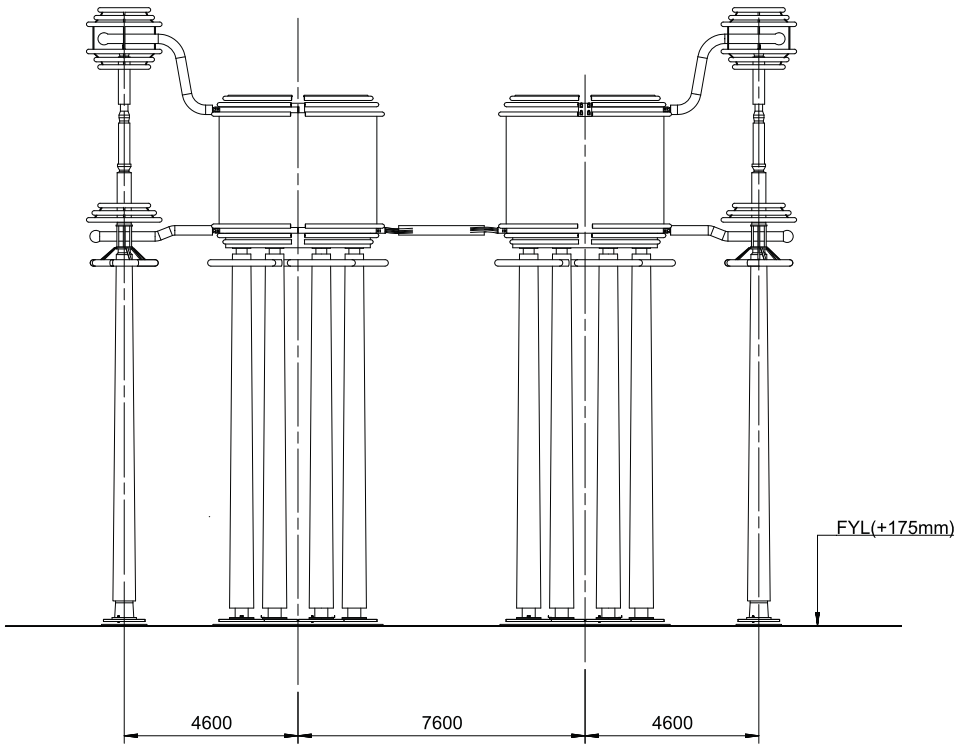

SECTION B-B

Rev	Revision	Prepared	Approved	Date
01	Revision made are marked. Also refer last page for revision notes.	Ashwinn, Kumaran, D	Naik, Ashish	2018-06-29

Contract No: CC-CS/651-SR2/HVDC-3063/7/G10/CA-I/5817-5821 dated 2017-01-25

Client: POWER GRID CORPORATION OF INDIA LIMITED (A Government of India Enterprise)

BHARAT HEAVY ELECTRICALS LTD. TRANSMISSION BUSINESS GROUP

Station Name: Raigarh

Classification No.: FJB-64

Based on: -

Prepared: Surendar, P 2018-01-09

Approved: Naik, Ashish 2018-01-12

Doc. Kind: Layout drawing

Project name: ±800kV, 6000MW HVDC Raigarh-Pugalur Terminals

Title: Pole1-Layout&Sections DC Yard

Status: Issued

Item designation: -

Resp dept: PGGI/DCHUBTPM

Rev ind: 01

Language: -

ABB AB - HVDC

Document number: 1JNL100484-534

Sheet/of: 4 / 11

(A2)

We reserve all rights in this document and in the information contained therein. Reproduction, use or disclosure to third parties without express authority is strictly forbidden. © ABB AB (SE).

This document is issued by means of a computerized system. The digitally stored original is electronically approved. The approved document has a number and date stated in the header. A manual signature is not required.

ANNEXURE-H (POLE-1)

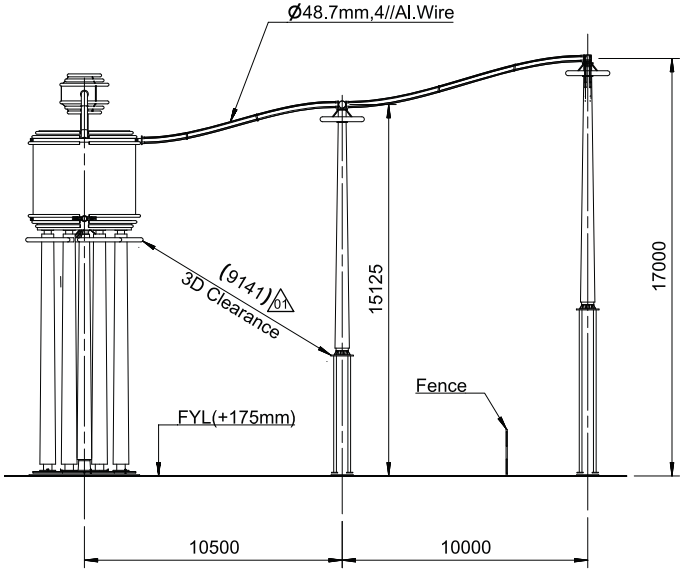

SECTION C-C

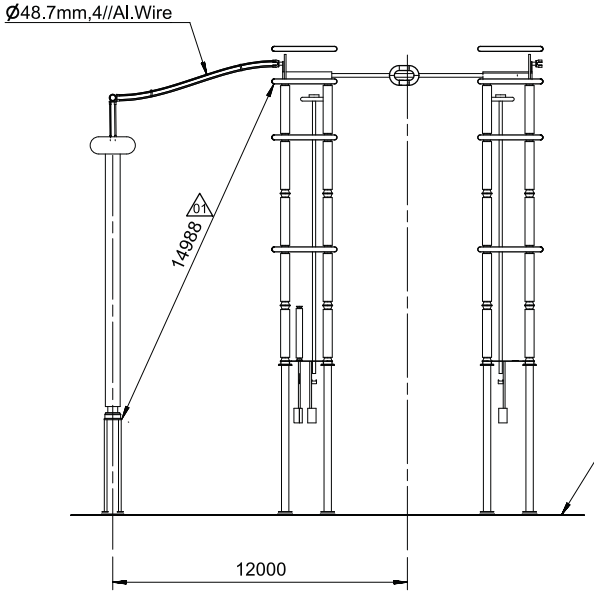

SECTION D-D 01

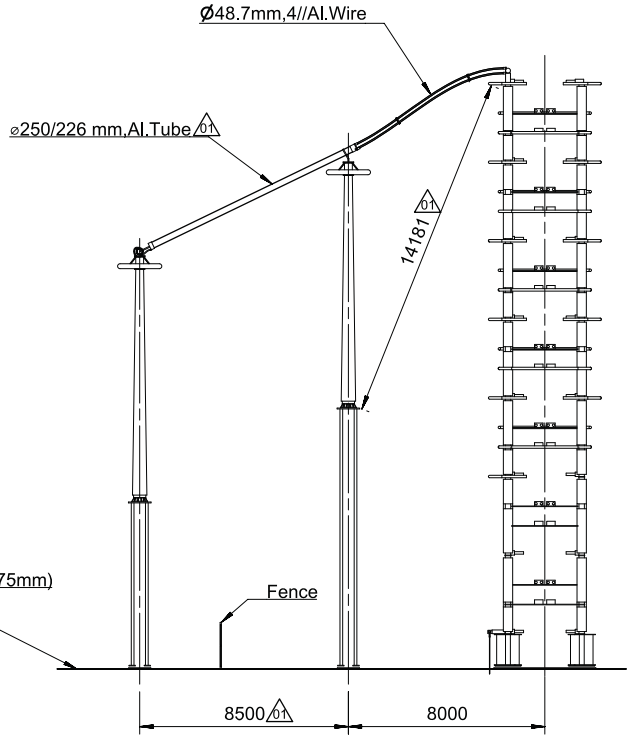

SECTION R-R 01

Rev	Revision	Prepared	Approved	Date
01	Revision made are marked. Also refer last page for revision notes.	Ashwinn, Kumaran, D	Naik, Ashish	2018-06-29

Contract No: CC-CS/651-SR2/HVDC-3063/7G10/CA-I/5817-5821 dated 2017-01-25

Client: POWER GRID CORPORATION OF INDIA LIMITED (A Government of India Enterprise)

BHARAT HEAVY ELECTRICALS LTD. TRANSMISSION BUSINESS GROUP

Station Name: Raigarh

Classification No.: FJB-64

Based on: -

Prepared: Surendar, P 2018-01-09

Approved: Naik, Ashish 2018-01-12

Doc. Kind: Layout drawing

Project name: ±800kV, 6000MW HVDC Raigarh-Pugalur Terminals

Title: Pole1-Layout&Sections DC Yard

Status: Issued

Item designation: -

Resp dept: PGGI/DCHUBTPM

Rev ind: 01

Language: -

ABB AB - HVDC

Document number: 1JNL100484-534

Sheet/of: 5 / 11

We reserve all rights in this document and in the information contained therein. Reproduction, use or disclosure to third parties without express authority is strictly prohibited. © ABB AB (SE)

This document is issued by means of a computerized system. The digitally stored original is electronically approved. The approved document has a name and date stamp in the upper right corner. A manual signature is not required.

ANNEXURE-H (POLE-1)

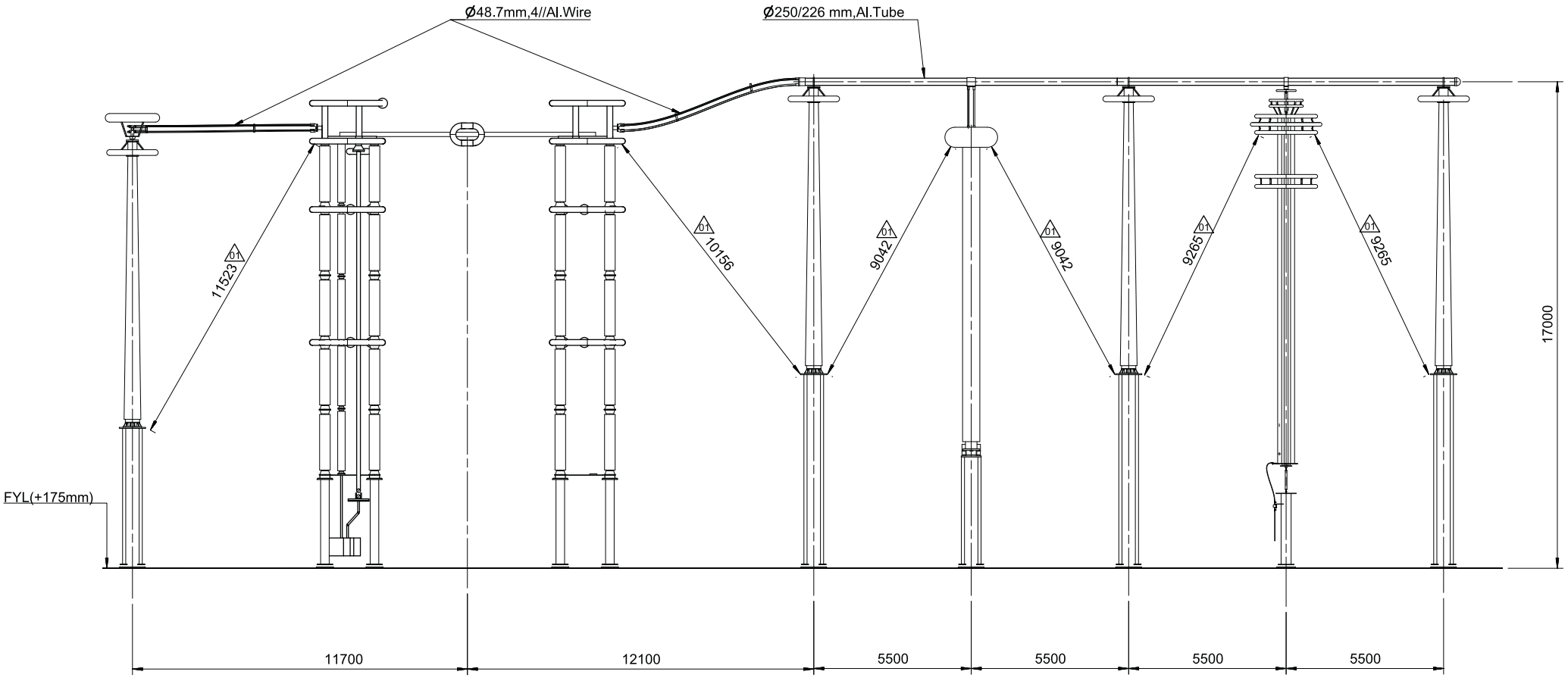

SECTION E-E

Rev	Revision	Prepared	Approved	Date
01	Revision made are marked. Also refer last page for revision notes.	Ashwinn, Kumaran, D	Naik, Ashish	2018-06-29

Contract No: CC-CS/651-SR2/HVDC-3063/7G10/CA-I/5817-5821 dated 2017-01-25

Client:

POWER GRID CORPORATION OF INDIA LIMITED
(A Government of India Enterprise)

पावरग्रिड

BHARAT HEAVY ELECTRICALS LTD.
TRANSMISSION BUSINESS GROUP

Station Name: Raigarh

Classification No.: FJB-64

Based on: -

Prepared: Surendar, P 2018-01-09

Approved: Naik, Ashish 2018-01-12

Doc. Kind: Layout drawing

Project name: ±800kV, 6000MW HVDC Raigarh-Pugalur Terminals

Title: Pole1-Layout&Sections DC Yard

Status: Issued

Item designation: -

Resp dept: PGGI/DCHUBTPM

Rev ind: 01

Language: -

ABB AB - HVDC

Document number: 1JNL100484-534

Sheet/of: 6 / 11

We reserve all rights in this document and in the information contained therein. Reproduction, use or disclosure to third parties without express authority is strictly forbidden. © ABB AB (SE).

This document is issued by means of a computerized system. The digitally stored original is electronically approved. The approved document has a numerical value and is the responsible. A manual signature is not required.

(A2)

ANNEXURE-H (POLE-1)

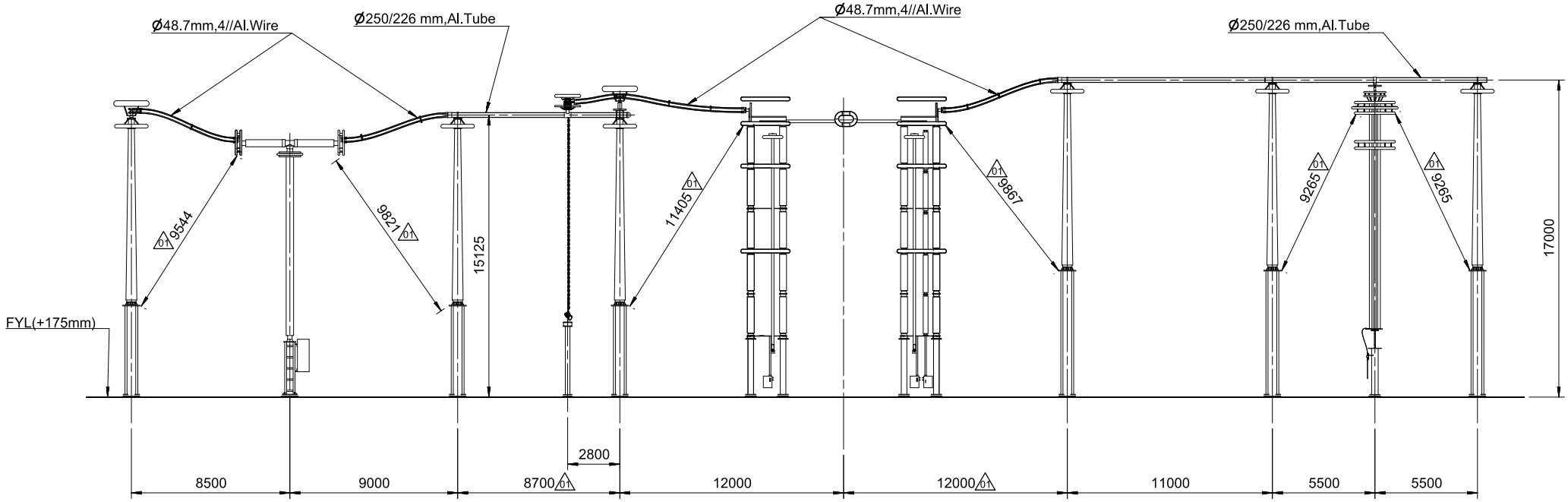

SECTION F-F

We reserve all rights in this document and in the information contained therein. Reproduction, use or disclosure to third parties without express written authority is strictly prohibited. © ABB AB (SE)

This document is issued by means of a computerized system. The digitally stored original is electronically approved. The approved document has a name and date stamp and the responsible. A manual signature is not required.

Rev	Revision	Prepared	Approved	Date
01	Revision made are marked. Also refer last page for revision notes.	Ashwinn, Kumaran, D	Naik, Ashish	2018-06-29

Contract No: CC-CS/651-SR2/HVDC-3063/7/G10/CA-I/5817-5821 dated 2017-01-25

Client:

POWER GRID CORPORATION OF INDIA LIMITED
(A Government of India Enterprise)

पावरग्रिड

BHARAT HEAVY ELECTRICALS LTD.
TRANSMISSION BUSINESS GROUP

Station Name: Raigarh

Classification No.: FJB-64

Based on: -

Prepared: Surendar, P 2018-01-09

Approved: Naik, Ashish 2018-01-12

Doc. Kind: Layout drawing

Project name: ±800kV, 6000MW HVDC Raigarh-Pugalur Terminals

Title: Pole1-Layout&Sections DC Yard

Status: Issued

Item designation: -

Resp dept: PGGI/DCHUBTPM

Rev ind: 01

Language: -

ABB AB - HVDC

Document number: 1JNL100484-534

Sheet/of: 7 / 11

(A2)

ANNEXURE-H (POLE-1)

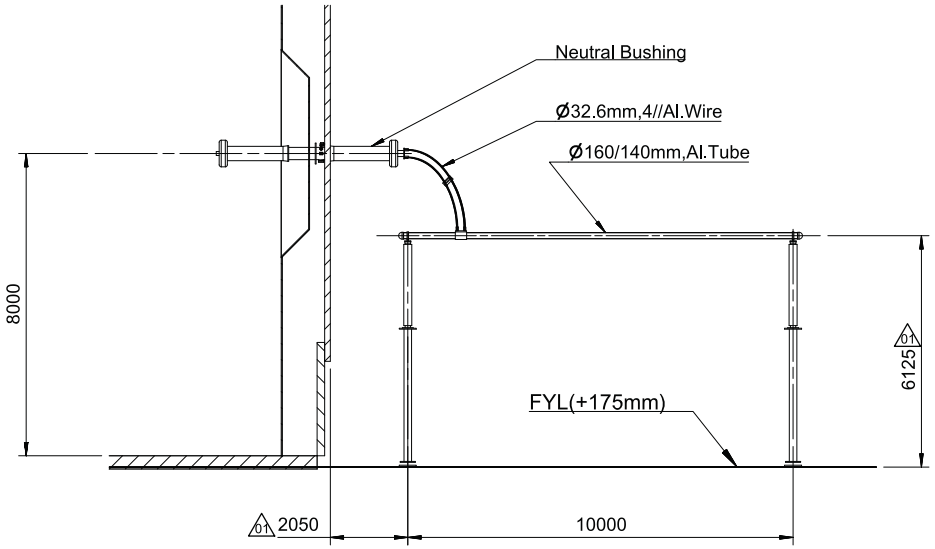

SECTION G-G

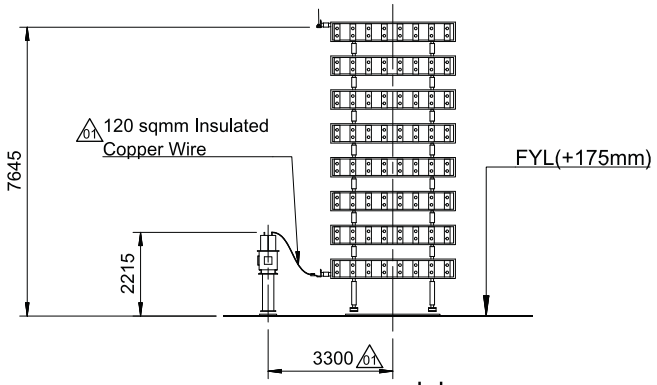

SECTION J-J

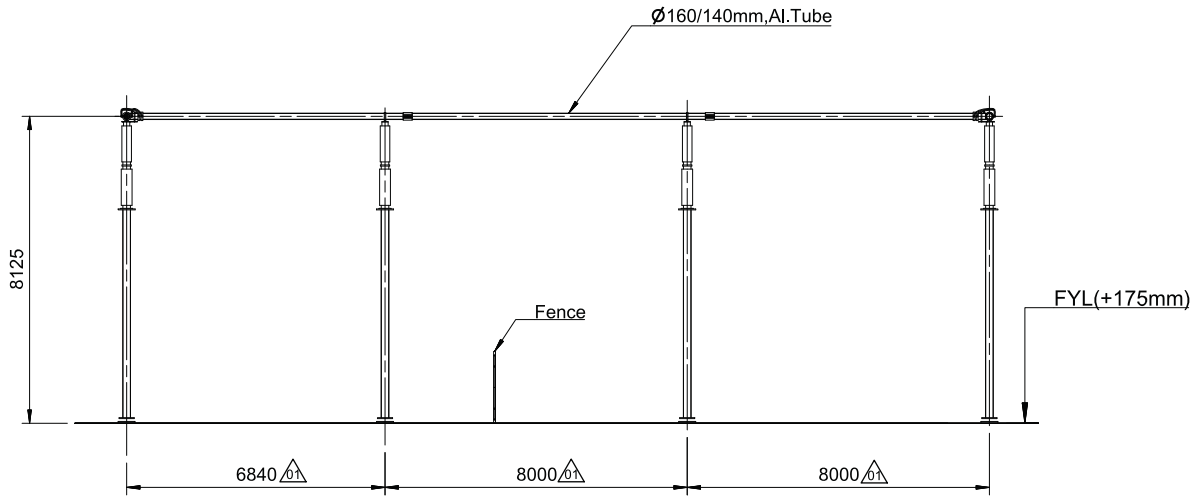

SECTION H-H

Rev	Revision	Prepared	Approved	Date
01	Revision made are marked. Also refer last page for revision notes.	Ashwinn, Kumaran, D	Naik, Ashish	2018-06-29

Contract No: CC-CS/651-SR2/HVDC-3063/7G10/CA-I/5817-5821 dated 2017-01-25

Client: POWER GRID CORPORATION OF INDIA LIMITED (A Government of India Enterprise)

BHARAT HEAVY ELECTRICALS LTD. TRANSMISSION BUSINESS GROUP

Station Name: Raigarh

Classification No.: FJB-64

Based on: -

Prepared: Surendar, P 2018-01-09

Approved: Naik, Ashish 2018-01-12

Doc. Kind: Layout drawing

Project name: ±800kV, 6000MW HVDC Raigarh-Pugalur Terminals

Title: Pole1-Layout&Sections DC Yard

Status: Issued

Item designation: -

Resp dept: PGGI/DCHUBTPM

Rev ind: 01

Language: -

ABB AB - HVDC

Document number: 1JNL100484-534

Sheet/of: 8 / 11

(A2)

We reserve all rights in this document and in the information contained therein. Reproduction, use or disclosure to third parties without express authority is strictly prohibited. © ABB AB (SE)

This document is issued by means of a computerized system. The digitally stored original is electronically approved. The approved document has a name in the field "Prepared". A manual signature is not required.

ANNEXURE-H (POLE-1)

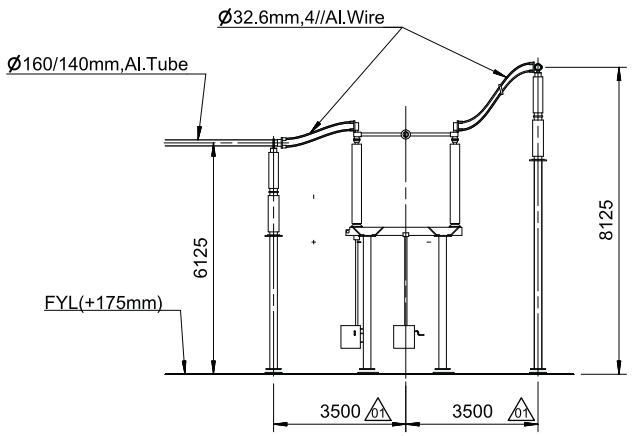

SECTION K-K

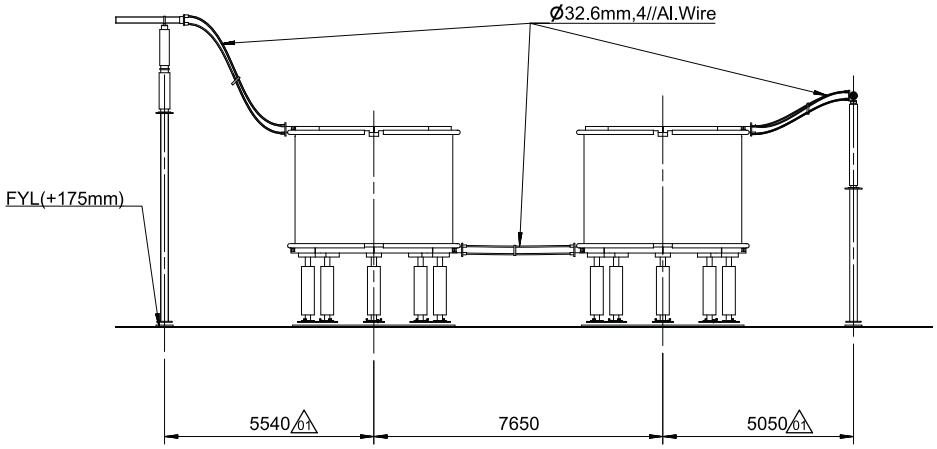

SECTION L-L

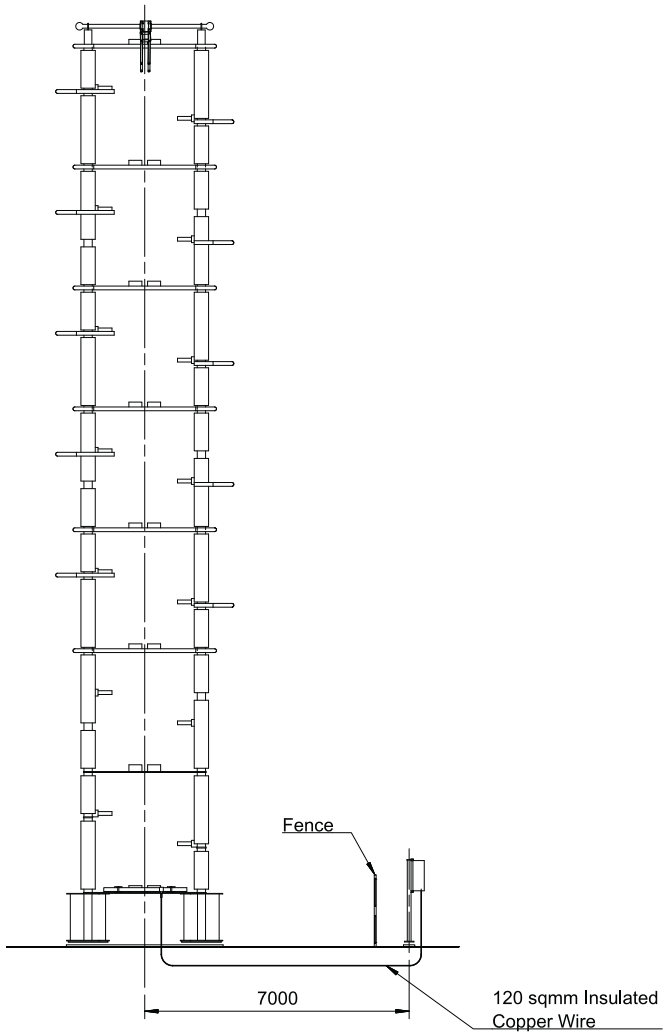

SECTION S-S 01

Rev	Revision	Prepared	Approved	Date
01	Revision made are marked. Also refer last page for revision notes.	Ashwinn, Kumaran, D	Naik, Ashish	2018-06-29

Contract No: CC-CS/651-SR2/HVDC-3063/7G10/CA-I/5817-5821 dated 2017-01-25

Client:

POWER GRID CORPORATION OF INDIA LIMITED
(A Government of India Enterprise)

BHARAT HEAVY ELECTRICALS LTD. TRANSMISSION BUSINESS GROUP

Station Name: Raigarh

Classification No.: FJB-64

Based on: -

Prepared: Surendar, P 2018-01-09

Approved: Naik, Ashish 2018-01-12

Doc. Kind: Layout drawing

Project name: ±800kV, 6000MW HVDC Raigarh-Pugalur Terminals

Title: Pole1-Layout&Sections DC Yard

Status: Issued

Item designation: -

Resp dept: PGGI/DCHUBTPM

Rev ind: 01

Language: -

ABB AB - HVDC

Document number: 1JNL100484-534

Sheet/of: 9 / 11

We reserve all rights in this document and in the information contained therein. Reproduction, use or disclosure to third parties without express authority is strictly forbidden. © ABB AB (SE)

This document is issued by means of a computerized system. The digitally stored original is electronically approved. The approved document has a number and status in the document management system. A manual signature is not required.

(A2)

ANNEXURE-H (POLE-1)

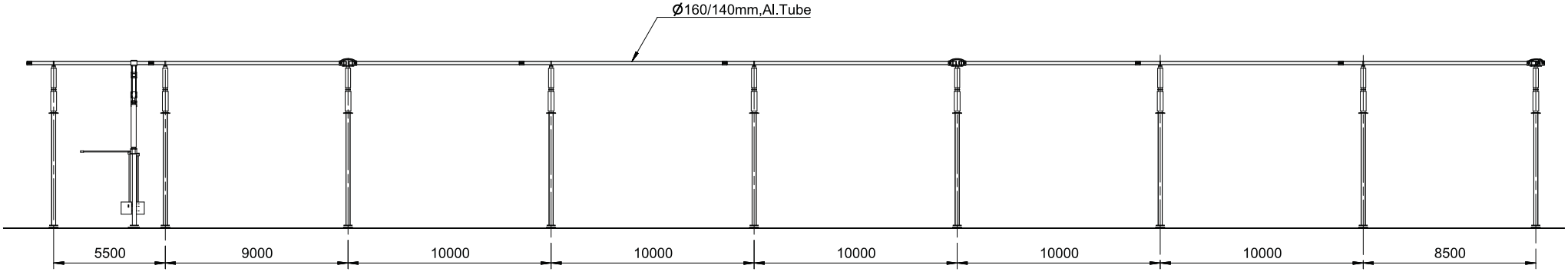

SECTION P-P

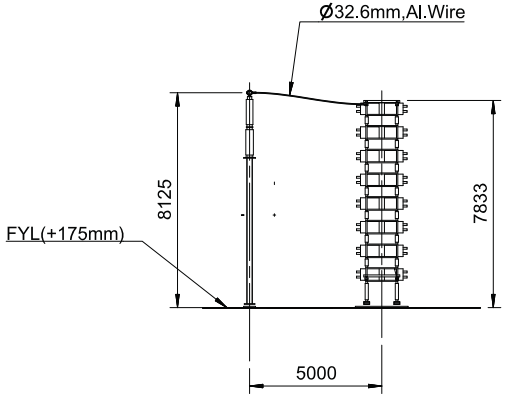

SECTION N-N

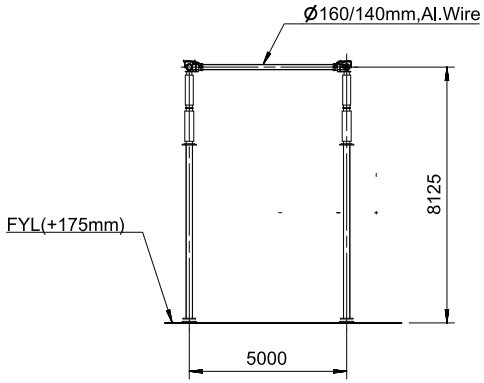

SECTION M-M

We reserve all rights in this document and in the information contained therein. Reproduction, use or disclosure to third parties without express authority is strictly forbidden. © ABB AB (SE)

This document is issued by means of a computerized system. The digitally stored original is electronically approved. The approved document has a name and date stamp. The approved document has a name and date stamp. A manual signature is not required.

Rev	Revision	Prepared	Approved	Date
01	Revision made are marked. Also refer last page for revision notes.	Ashwinn, Kumaran, D	Naik, Ashish	2018-06-29

Contract No: CC-CS/651-SR2/HVDC-3063/7G10/CA-I/5817-5821 dated 2017-01-25

Client:

POWER GRID CORPORATION OF INDIA LIMITED
(A Government of India Enterprise)

पावरग्रिड

BHARAT HEAVY ELECTRICALS LTD. TRANSMISSION BUSINESS GROUP

Station Name: Raigarh

Classification No.: FJB-64

Based on: -

Prepared: Surendar, P 2018-01-09

Approved: Naik, Ashish 2018-01-12

Doc. Kind: Layout drawing

Project name: ±800kV, 6000MW HVDC Raigarh-Pugalur Terminals

Title: Pole1-Layout&Sections DC Yard

Status: Issued

Item designation: -

Resp dept: PGGI/DCHUBTPM

Rev ind: 01

Language: -

ABB AB - HVDC

Document number: 1JNL100484-534

Sheet/of: 10 / 11

(A2)

ANNEXURE-H (POLE-1)

Revision History :

Revision No.	Date	Sheet No.	Revision Note
01	28.06.2018	Sheet 1	Notes updated
		Sheet 2	Equipment position updated & North East coordinates added
		Sheet 3	Section R-R & S-S are added & Section D-D Modified
		Sheet 5	Section view R-R & D-D are updated
			Dimensions and Tube size updated
		Sheet 6	Dimensions updated
		Sheet 7	Dimensions updated
		Sheet 8	Dimensions updated
		Sheet 9	Dimensions updated & Section S-S added
		Sheet 10	Dimensions updated

We reserve all rights in this document and in the information contained therein. Reproduction, use or disclosure to third parties without express authority is strictly forbidden. © ABB AB (SE).

This document is issued by means of a computerized system. The digitally stored original is electronically approved. The approved document has a name and date stamp. The approved document is valid without a manual signature. A manual signature is not required.

Rev	Revision	Prepared	Approved	Date
01	Revision made are marked. Also refer last page for revision notes.	Ashwinn, Kumaran, D	Naik, Ashish	2018-06-29

Contract No: CC-CS/651-SR2/HVDC-3063/7G10/CA-I/5817-5821 dated 2017-01-25

Client:

POWER GRID CORPORATION OF INDIA LIMITED
(A Government of India Enterprise)

पावरग्रिड

BHARAT HEAVY ELECTRICALS LTD.
TRANSMISSION BUSINESS GROUP

Station Name: Raigarh

Classification No.: FJB-64

Based on: -

Prepared: Surendar, P 2018-01-09

Approved: Naik, Ashish 2018-01-12

Doc. Kind: Layout drawing

Project name: ±800kV, 6000MW HVDC Raigarh-Pugalur Terminals

Title: Pole1-Layout&Sections DC Yard

Status: Issued

Item designation: -

Resp dept: PGGI/DCHUBTPM

Rev ind: 01

Language: -

ABB AB - HVDC

Document number: 1JNL100484-534

Sheet/of: 11 / 11

(A2)

ANNEXURE-H (POLE-2)

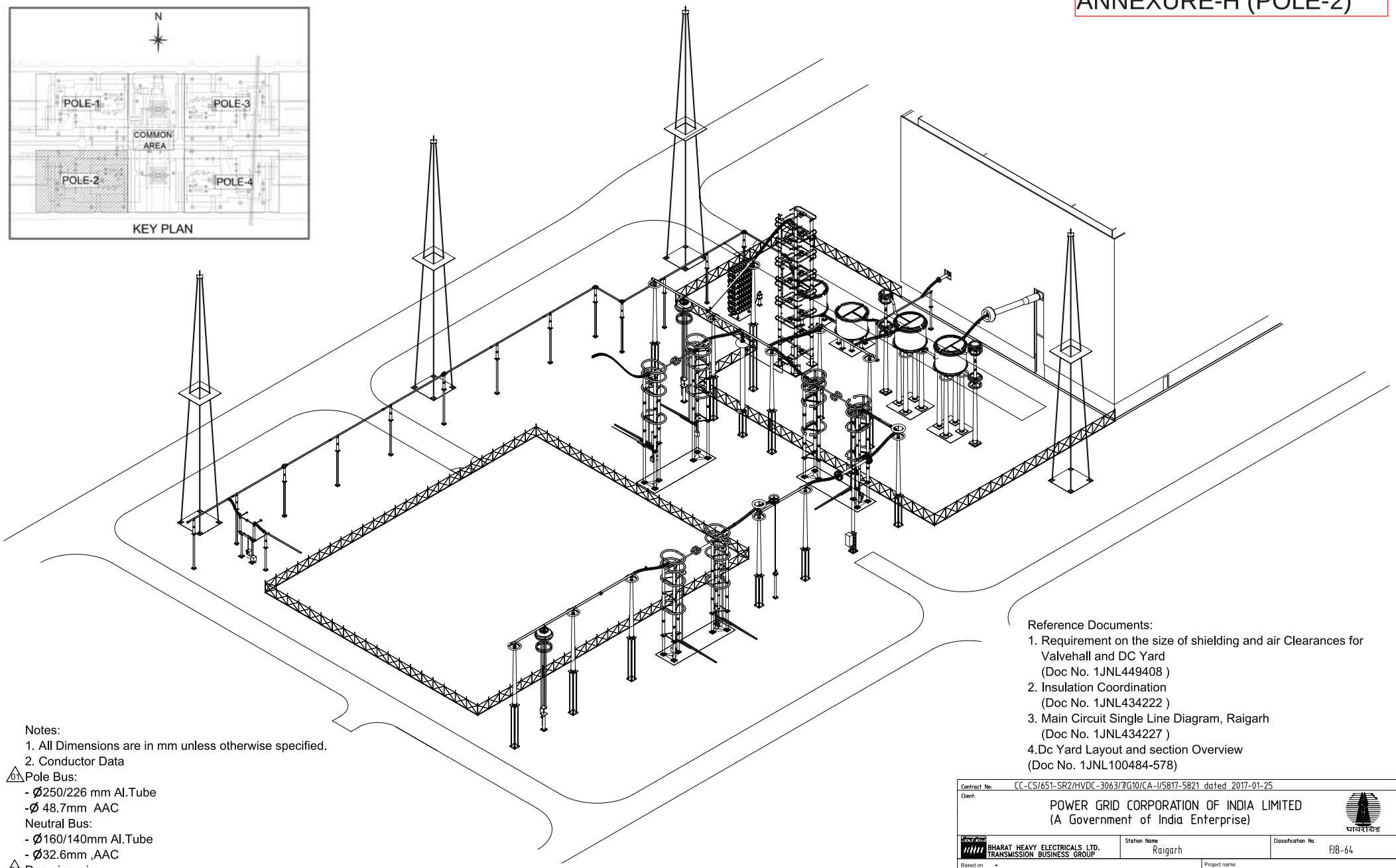

Reference Documents:
1. Requirement on the size of shielding and air Clearances for Valvehall and DC Yard (Doc No. 1JNL449408)
2. Insulation Coordination (Doc No. 1JNL434222)
3. Main Circuit Single Line Diagram, Raigarh (Doc No. 1JNL434227)
4.Dc Yard Layout and section Overview (Doc No. 1JNL100484-578)

Notes:
1. All Dimensions are in mm unless otherwise specified.
2. Conductor Data

01 Pole Bus:
- Ø250/226 mm Al.Tube
-Ø 48.7mm AAC

Neutral Bus:
- Ø160/140mm Al.Tube
- Ø32.6mm ,AAC

01 Damping wire:
- Ø48.7mm AAC for Ø250/226 mm Al.Tube (Length of damping wire Shall be 2/3 of the length of the bus bar)
- Ø29.0mm AAC for Ø160/140 mm Al.Tube (Length of damping wire Shall be 2/3 of the length of the bus bar)

Rev	Revision	Prepared	Approved	Date
01	Revision made are marked. Also refer last page for revision notes.	Huzair, FM	Naik, Ashish	2018-06-29

Contract No: CC-CS/651-SR2/HVDC-3063/7G10/CA-I/5817-5821 dated 2017-01-25

Client: POWER GRID CORPORATION OF INDIA LIMITED (A Government of India Enterprise)

BHARAT HEAVY ELECTRICALS LTD. TRANSMISSION BUSINESS GROUP

Station Name: Raigarh

Classification No.: FJB-64

Based on: -

Prepared: Huzair, FM 2018-01-09

Approved: Naik, Ashish 2018-01-12

Doc. Kind: Layout drawing

Project name: ±800kV, 6000MW HVDC Raigarh-Pugalur Terminals

Title: Pole2 Layout&Sections DC Yard

Status: Issued

Item designation: -

Resp dept: PGGI/DCHUBTPM

Rev ind: 01

Language: -

ABB AB - HVDC

Document number: 1JNL100484-543

Sheet/of: 1 / 11

We reserve all rights in this document and in the information contained therein. Reproduction, use or disclosure to third parties without express authority is strictly forbidden. © ABB AB (SE)

This document is issued by means of a computerized system. The digitally stored original is electronically approved. The approved document has a name and date in the approval field. A manual signature is not required.

(A2)

ANNEXURE-H (POLE-2)

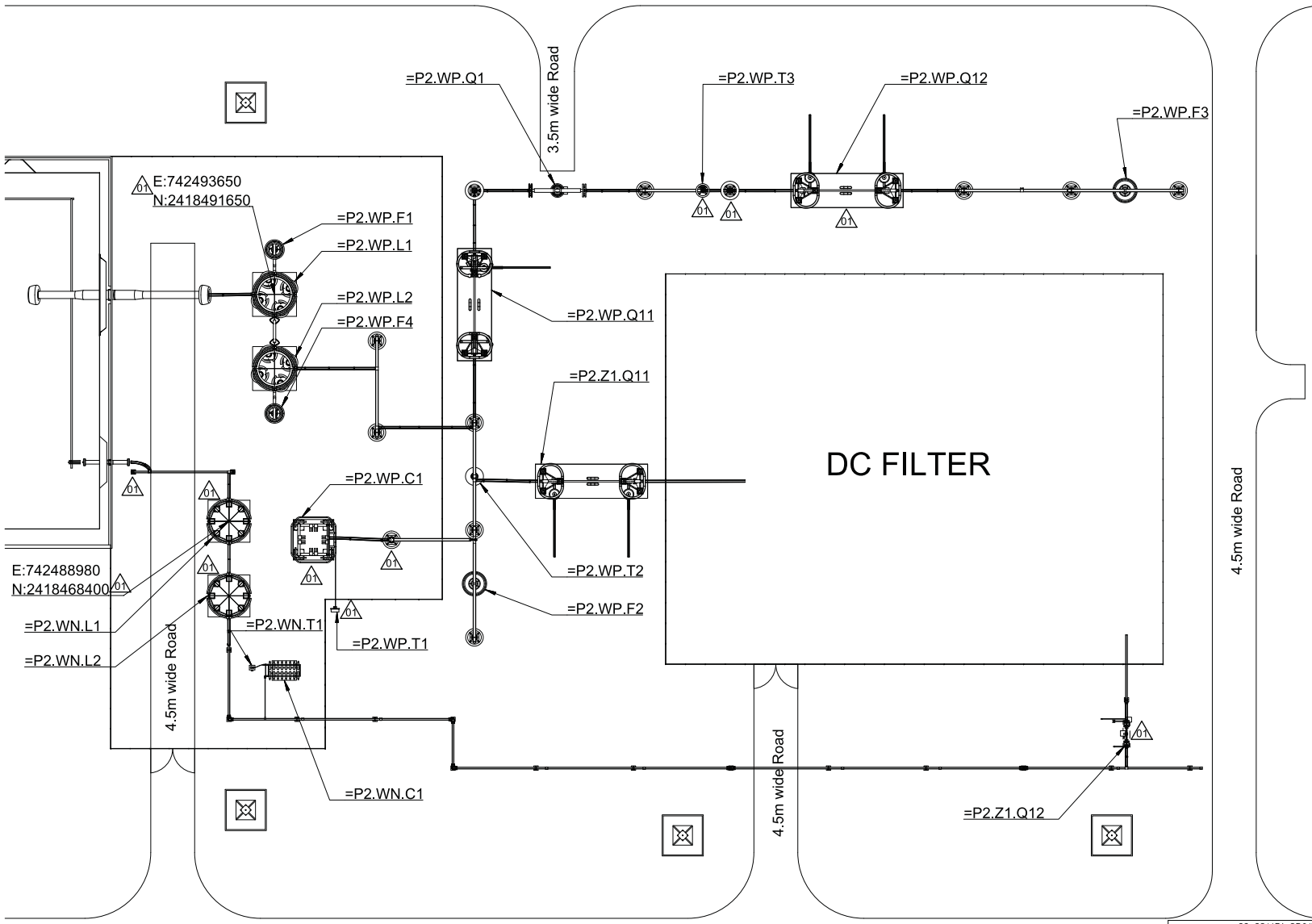

We reserve all rights in this document and in the information contained therein. Reproduction, use or disclosure to third parties without express authority is strictly prohibited. © ABB AB (SE)

This document is issued by means of a computerized system. The digitally stored original is electronically approved. The approved document has a name and date stamped in the upper right corner. A manual signature is not required.

Rev	Revision	Prepared	Approved	Date
01	Revision made are marked. Also refer last page for revision notes.	Huzair, FM	Naik, Ashish	2018-06-29

Contract No: CC-CS/651-SR2/HVDC-3063/7G10/CA-I/5817-5821 dated 2017-01-25

Client:

POWER GRID CORPORATION OF INDIA LIMITED
(A Government of India Enterprise)

पावरग्रिड

BHARAT HEAVY ELECTRICALS LTD. TRANSMISSION BUSINESS GROUP

Station Name: Raigarh

Classification No.: FJB-64

Based on: -

Prepared	Huzair, FM	2018-01-09
Approved	Naik, Ashish	2018-01-12
Doc. Kind	Layout drawing	

Project name: ±800kV, 6000MW HVDC Raigarh-Pugalur Terminals

Title: Pole2 Layout&Sections DC Yard

Status: Issued

Item designation: -

Resp dept: PGGI/DCHUBTPM

Rev ind: 01

Language: -

ABB AB - HVDC

Document number: 1JNL100484-543

Sheet/of: 2 / 11

(A2)

ANNEXURE-H (POLE-2)

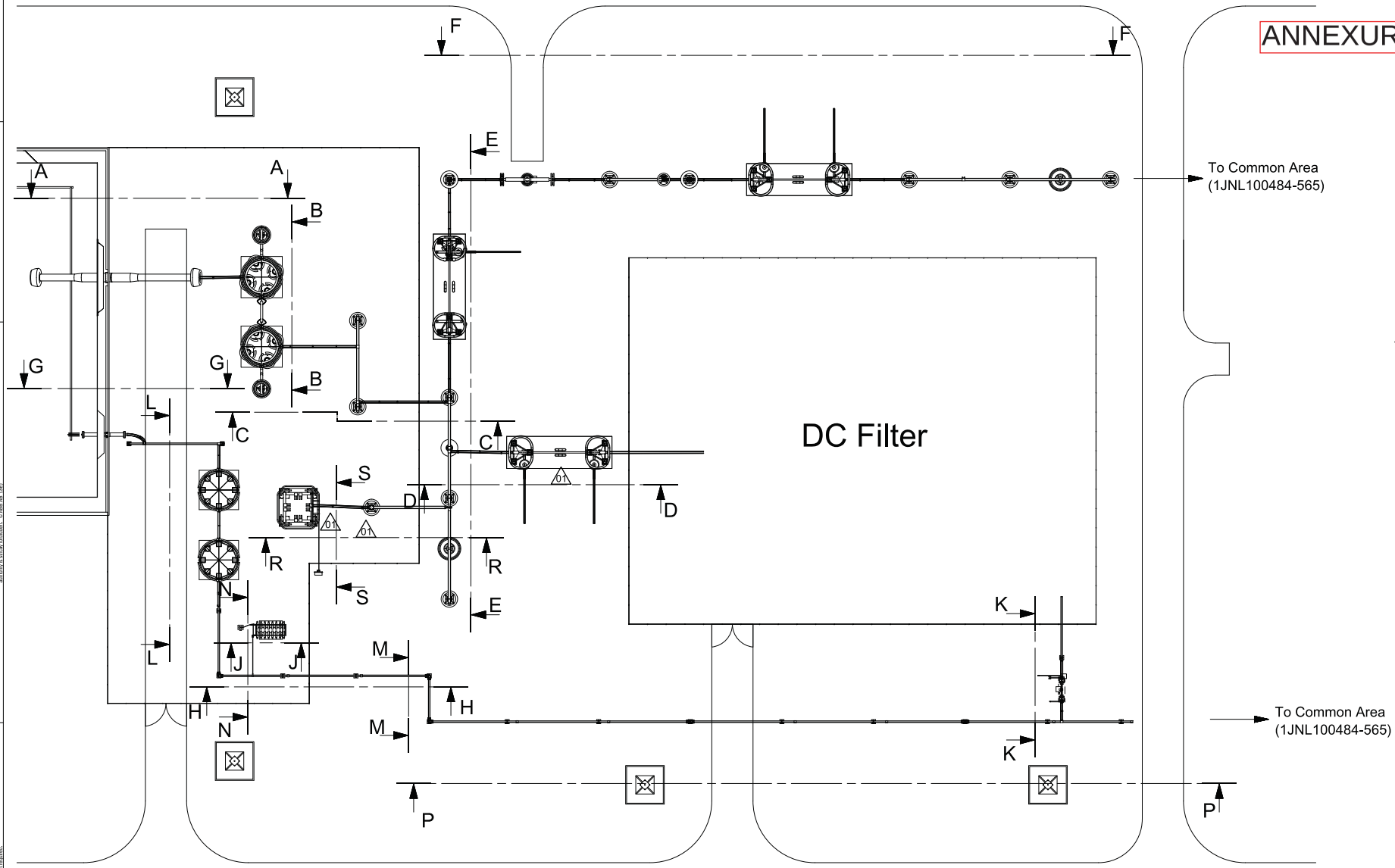

Note:
Section A-A See Sheet 04
Section B-B See Sheet 04

Section C-C See Sheet 05
Section D-D See Sheet 05
01 Section R-R See Sheet 05

Section E-E See Sheet 06

Section F-F See Sheet 07

Section G-G See Sheet 08
Section H-H See Sheet 08
Section J-J See Sheet 08

Section K-K See Sheet 09
Section L-L See Sheet 09
01 Section S-S See Sheet 09

Section M-M See Sheet 10
Section N-N See Sheet 10
Section P-P See Sheet 10

Rev	Revision	Prepared	Approved	Date
01	Revision made are marked. Also refer last page for revision notes.	Huzair, FM	Naik, Ashish	2018-06-29

Contract No: CC-CS/651-SR2/HVDC-3063/7G10/CA-I/5817-5821 dated 2017-01-25

Client:
POWER GRID CORPORATION OF INDIA LIMITED
(A Government of India Enterprise)

BHARAT HEAVY ELECTRICALS LTD. TRANSMISSION BUSINESS GROUP

Station Name: Raigarh
Classification No.: FJB-64

Based on: -
Prepared: Huzair, FM 2018-01-09
Approved: Naik, Ashish 2018-01-12
Doc. Kind: Layout drawing

Project name: ±800kV, 6000MW HVDC Raigarh-Pugalur Terminals

Title: Pole2 Layout&Sections DC Yard

Status: Issued
Resp dept: PGGI/DCHUBTPM
Rev ind: 01
Item designation: -
Language: -

ABB AB - HVDC

Document number: 1JNL100484-543

Sheet/of: 3 / 11

(A2)

We reserve all rights in this document and in the information contained therein. Reproduction, use or disclosure to third parties without express authority is strictly forbidden. © ABB AB (SE)

This document is issued by means of a computerized system. The digitally stored original is electronically approved. The approved document has a name and date stamp in the upper right corner. A manual signature is not required.

ANNEXURE-H (POLE-2)

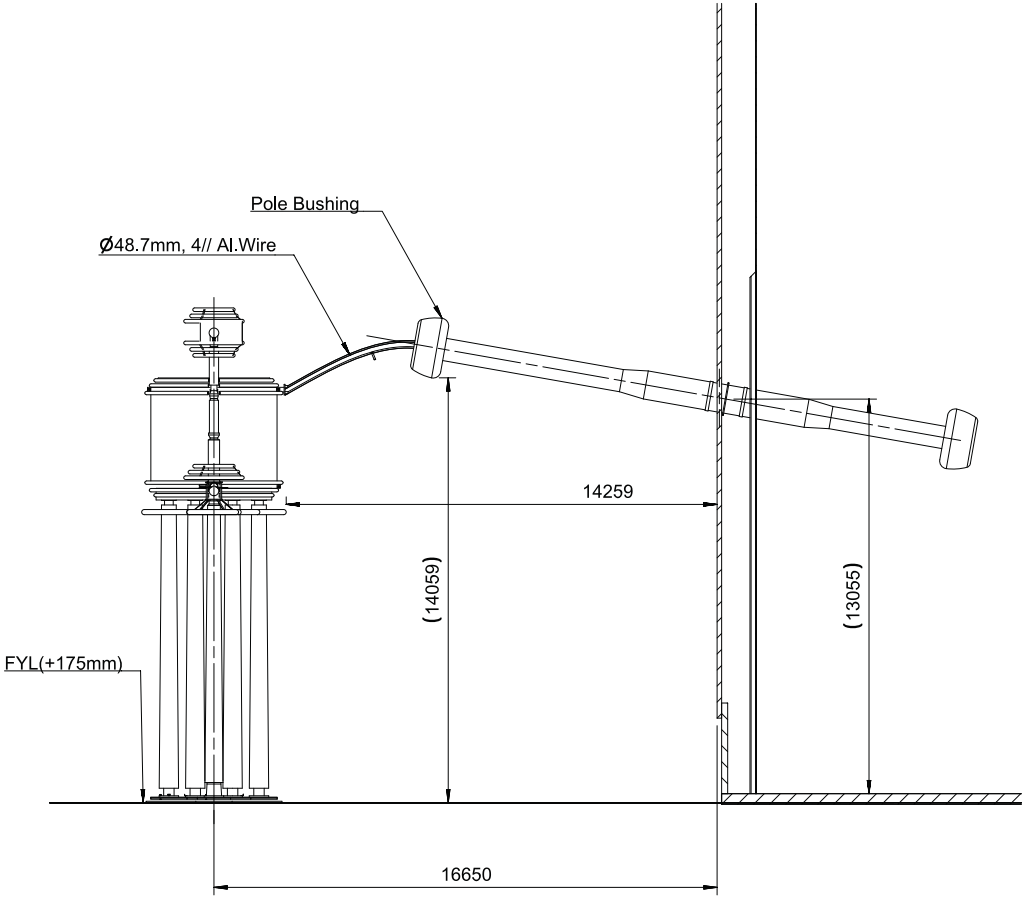

SECTION A-A

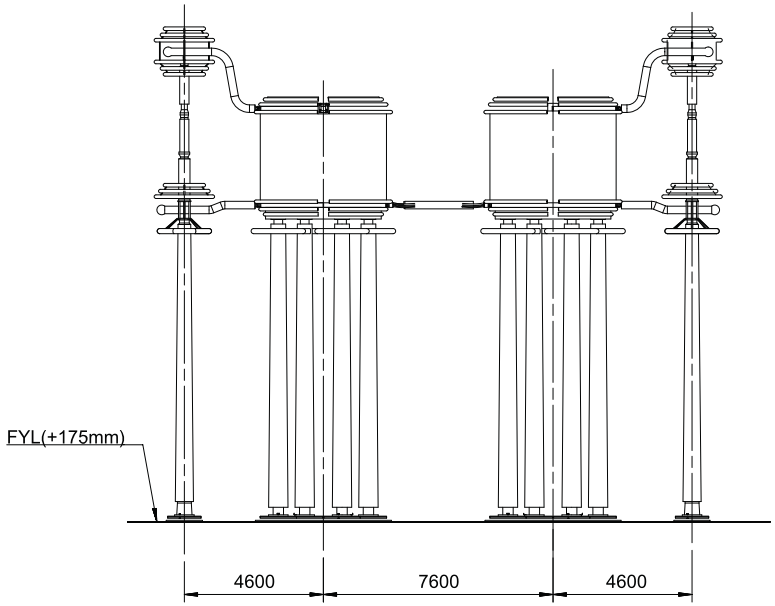

SECTION B-B

Rev	Revision	Prepared	Approved	Date
01	Revision made are marked. Also refer last page for revision notes.	Huzair, FM	Naik, Ashish	2018-06-29

Contract No: CC-CS/651-SR2/HVDC-3063/7G10/CA-I/5817-5821 dated 2017-01-25

Client:

POWER GRID CORPORATION OF INDIA LIMITED
(A Government of India Enterprise)

पावरग्रिड

BHARAT HEAVY ELECTRICALS LTD.
TRANSMISSION BUSINESS GROUP

Station Name: Raigarh

Classification No.: FJB-64

Based on: -

Prepared: Huzair, FM 2018-01-09

Approved: Naik, Ashish 2018-01-12

Doc. Kind: Layout drawing

Project name: ±800kV, 6000MW HVDC Raigarh-Pugalur Terminals

Title: Pole2 Layout&Sections DC Yard

Status: Issued

Item designation: -

Resp dept: PGGI/DCHUBTPM

Rev ind: 01

Language: -

ABB AB - HVDC

Document number: 1JNL100484-543

Sheet/of: 4 / 11

We reserve all rights in this document and in the information contained therein. Reproduction, use or disclosure to third parties without express authority is strictly forbidden. © ABB AB (SE)

This document is issued by means of a computerized system. The digitally stored original is electronically approved. The approved document has a name and date stamp. The approved document has a name and date stamp. A manual signature is not required.

(A2)

ANNEXURE-H (POLE-2)

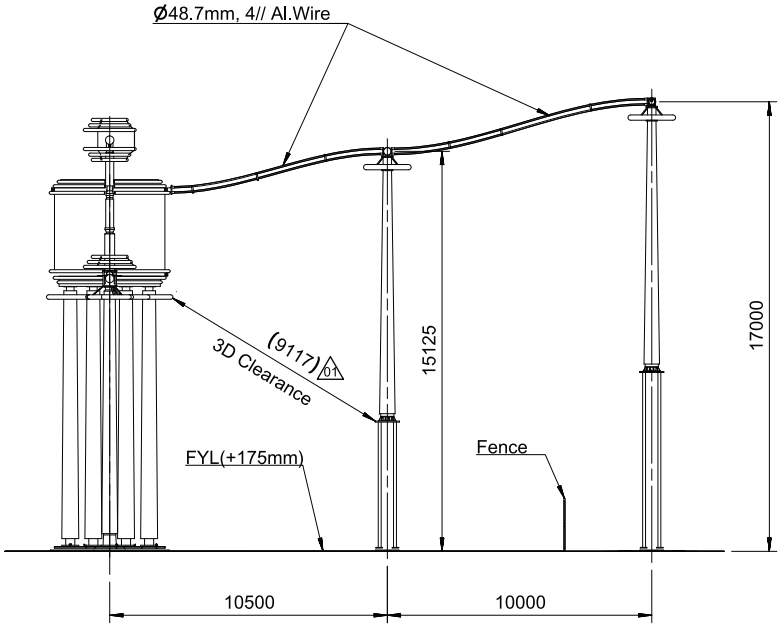

SECTION C-C

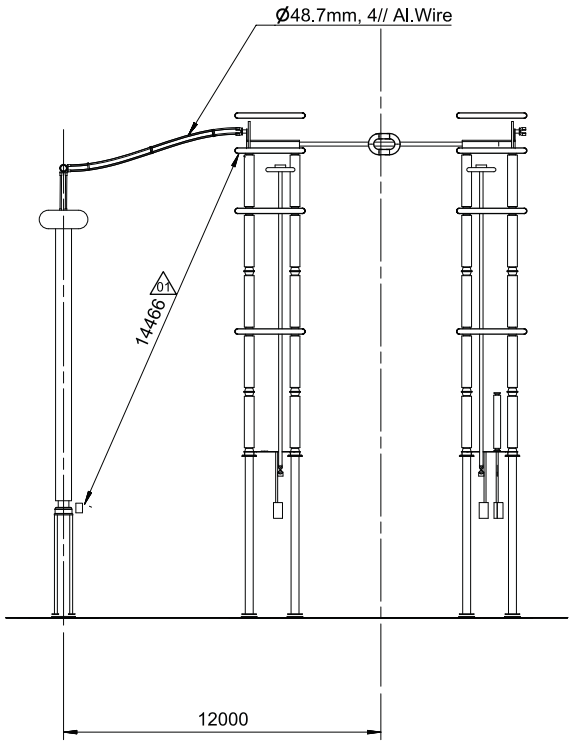

SECTION D-D 01

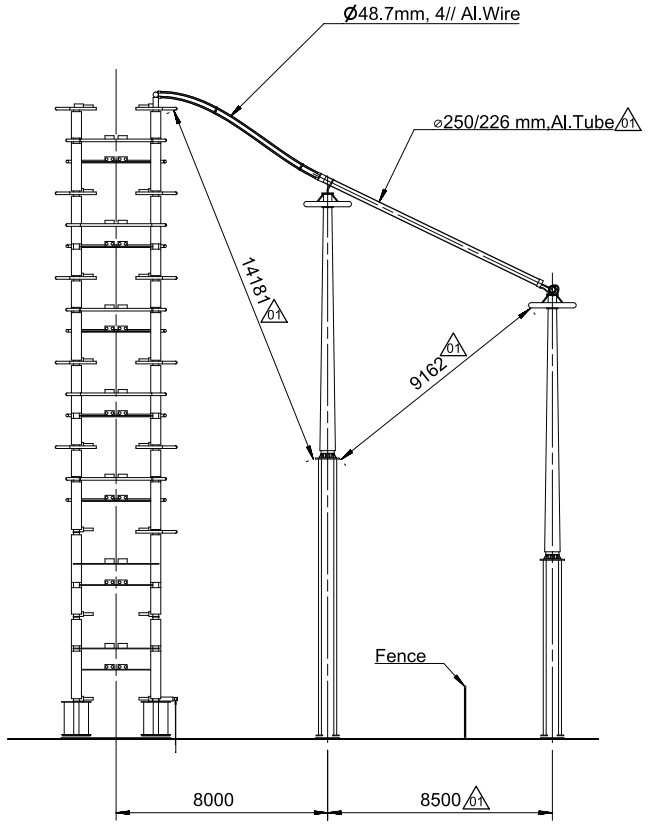

SECTION R-R 01

Rev	Revision	Prepared	Approved	Date
01	Revision made are marked. Also refer last page for revision notes.	Huzair, FM	Naik, Ashish	2018-06-29

Contract No: CC-CS/651-SR2/HVDC-3063/7G10/CA-I/5817-5821 dated 2017-01-25

Client:

POWER GRID CORPORATION OF INDIA LIMITED
(A Government of India Enterprise)

पावरग्रिड

BHARAT HEAVY ELECTRICALS LTD.
TRANSMISSION BUSINESS GROUP

Station Name: Raigarh

Classification No.: FJB-64

Based on: -

Prepared: Huzair, FM 2018-01-09

Approved: Naik, Ashish 2018-01-12

Doc. Kind: Layout drawing

Project name: ±800kV, 6000MW HVDC Raigarh-Pugalur Terminals

Title: Pole2 Layout&Sections DC Yard

Status: Issued

Item designation: -

Resp dept: PGGI/DCHUBTPM

Rev ind: 01

Language: -

ABB AB - HVDC

Document number: 1JNL100484-543

Sheet/of: 5 / 11

We reserve all rights in this document and in the information contained therein. Reproduction, use or disclosure to third parties without express authority is strictly forbidden. © ABB AB (SE)

This document is issued by means of a computerized system. The digitally stored original is electronically approved. The approved document has a number and status in the Document Management System. A manual signature is not required.

(A2)

ANNEXURE-H (POLE-2)

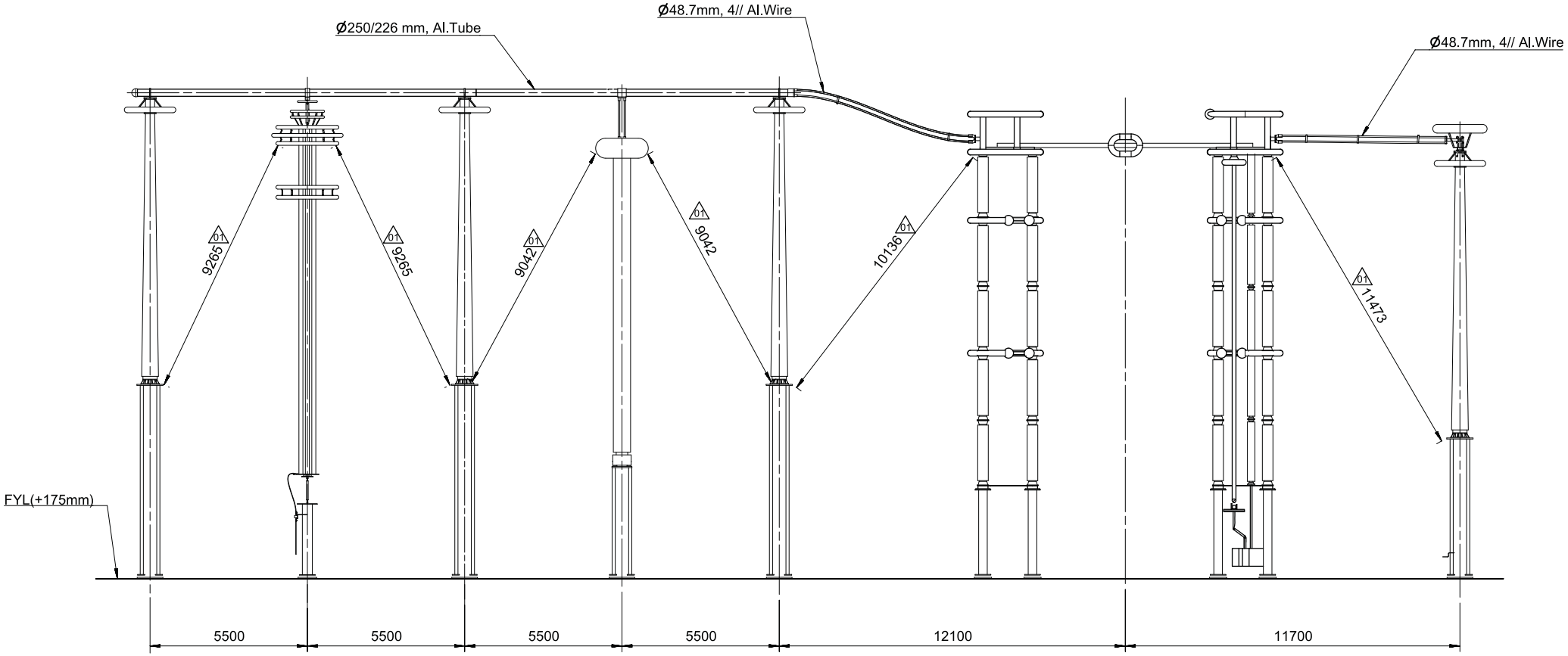

SECTION E-E

Rev	Revision	Prepared	Approved	Date
01	Revision made are marked. Also refer last page for revision notes.	Huzair, FM	Naik, Ashish	2018-06-29

Contract No: CC-CS/651-SR2/HVDC-3063/7G10/CA-I/5817-5821 dated 2017-01-25

Client:

POWER GRID CORPORATION OF INDIA LIMITED
(A Government of India Enterprise)

पावरग्रिड

BHARAT HEAVY ELECTRICALS LTD.
TRANSMISSION BUSINESS GROUP

Station Name: Raigarh

Classification No.: FJB-64

Based on: -

Prepared: Huzair, FM 2018-01-09

Approved: Naik, Ashish 2018-01-12

Doc. Kind: Layout drawing

Project name: ±800kV, 6000MW HVDC Raigarh-Pugalur Terminals

Title: Pole2 Layout&Sections DC Yard

Status: Issued

Item designation: -

Resp dept: PGGI/DCHUBTPM

Rev ind: 01

Language: -

ABB AB - HVDC

Document number: 1JNL100484-543

Sheet/of: 6 / 11

We reserve all rights in this document and in the information contained therein. Reproduction, use or disclosure to third parties without express authority is strictly forbidden. © ABB AB (SE)

This document is issued by means of a computerized system. The digitally stored original is electronically approved. The approved document has a numerical value and is the responsible. A manual signature is not required.

(A2)

ANNEXURE-H (POLE-2)

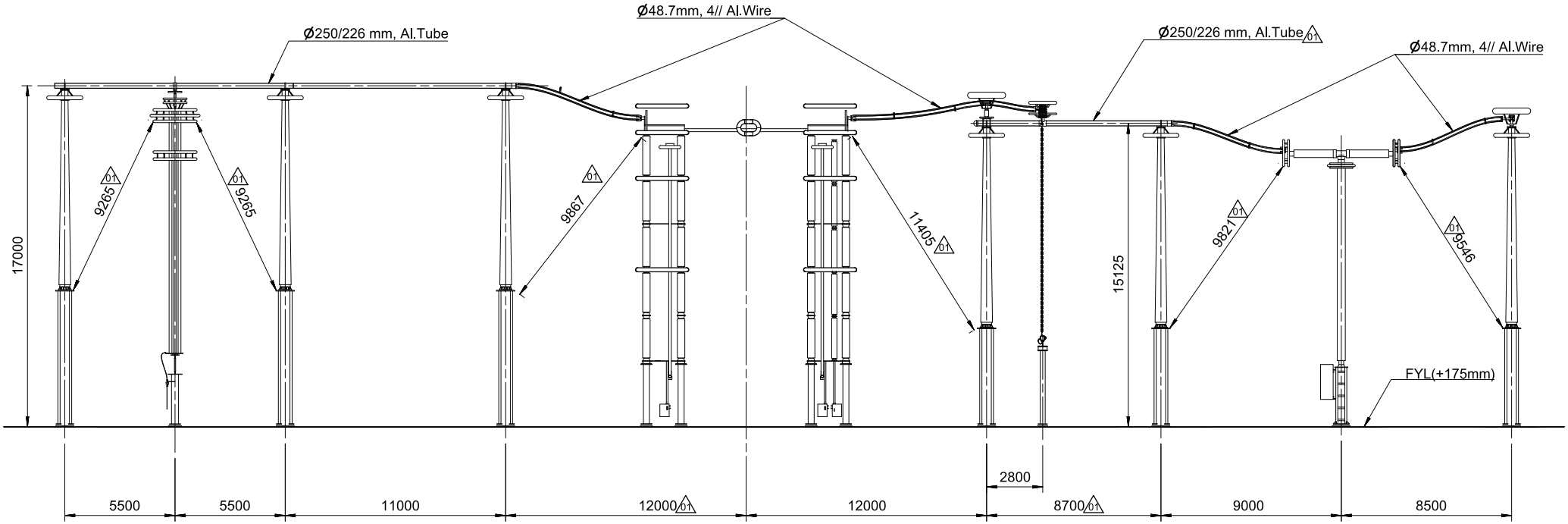

SECTION F-F

Rev	Revision	Prepared	Approved	Date
01	Revision made are marked. Also refer last page for revision notes.	Huzair, FM	Naik, Ashish	2018-06-29

Contract No: CC-CS/651-SR2/HVDC-3063/7G10/CA-I/5817-5821 dated 2017-01-25

Client:

POWER GRID CORPORATION OF INDIA LIMITED
(A Government of India Enterprise)

पावरग्रिड

BHARAT HEAVY ELECTRICALS LTD. TRANSMISSION BUSINESS GROUP

Station Name: Raigarh

Classification No.: FJB-64

Based on: -

Prepared: Huzair, FM 2018-01-09

Approved: Naik, Ashish 2018-01-12

Doc. Kind: Layout drawing

Project name: ±800kV, 6000MW HVDC Raigarh-Pugalur Terminals

Title: Pole2 Layout&Sections DC Yard

Status: Issued

Item designation: -

Resp dept: PGGI/DCHUBTPM

Rev ind: 01

Language: -

ABB AB - HVDC

Document number: 1JNL100484-543

Sheet/of: 7 / 11

(A2)

We reserve all rights in this document and in the information contained therein. Reproduction, use or disclosure to third parties without express authority is strictly forbidden. © ABB AB (SE)

This document is issued by means of a computerized system. The digitally stored original is electronically approved. The approved document has a name and date stamped in the approval field. A manual signature is not required.

ANNEXURE-H (POLE-2)

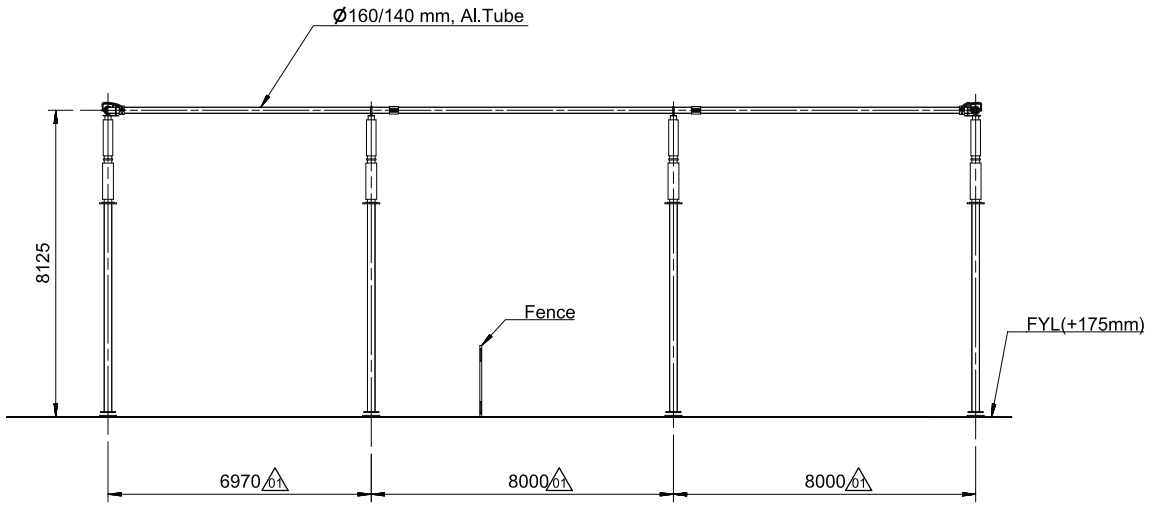

SECTION H-H

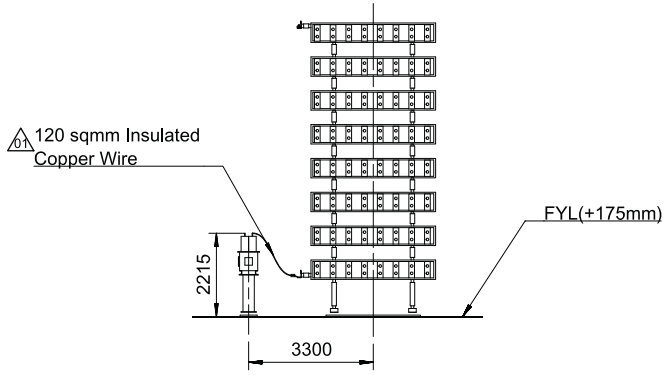

SECTION J-J

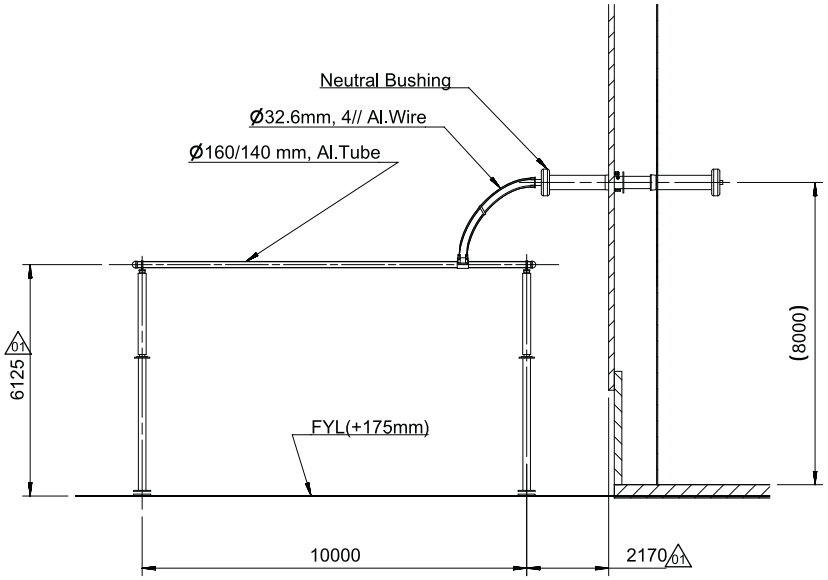

SECTION G-G

Rev	Revision	Prepared	Approved	Date
01	Revision made are marked. Also refer last page for revision notes.	Huzair, FM	Naik, Ashish	2018-06-29

Contract No: CC-CS/651-SR2/HVDC-3063/7G10/CA-I/5817-5821 dated 2017-01-25

Client: POWER GRID CORPORATION OF INDIA LIMITED (A Government of India Enterprise)

BHARAT HEAVY ELECTRICALS LTD. TRANSMISSION BUSINESS GROUP

Station Name: Raigarh

Classification No.: FJB-64

Based on: -

Prepared: Huzair, FM 2018-01-09

Approved: Naik, Ashish 2018-01-12

Doc. Kind: Layout drawing

Project name: ±800kV, 6000MW HVDC Raigarh-Pugalur Terminals

Title: Pole2 Layout&Sections DC Yard

Status: Issued

Item designation: -

Resp dept: PGGI/DCHUBTPM

Rev ind: 01

Language: -

ABB AB - HVDC

Document number: 1JNL100484-543

Sheet/of: 8 / 11

We reserve all rights in this document and in the information contained therein. Reproduction, use or disclosure to third parties without express authority is strictly prohibited. © ABB AB (SE)

This document is issued by means of a computerized system. The digitally stored original is electronically approved. The approved document has a name and date in the approval field. A manual signature is not required.

ANNEXURE-H (POLE-2)

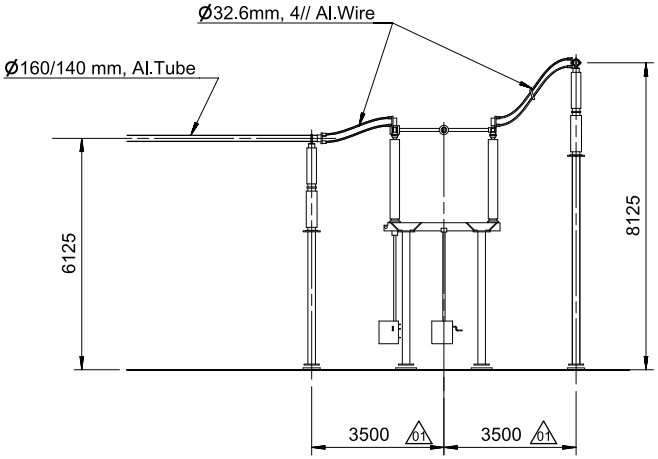

SECTION K-K

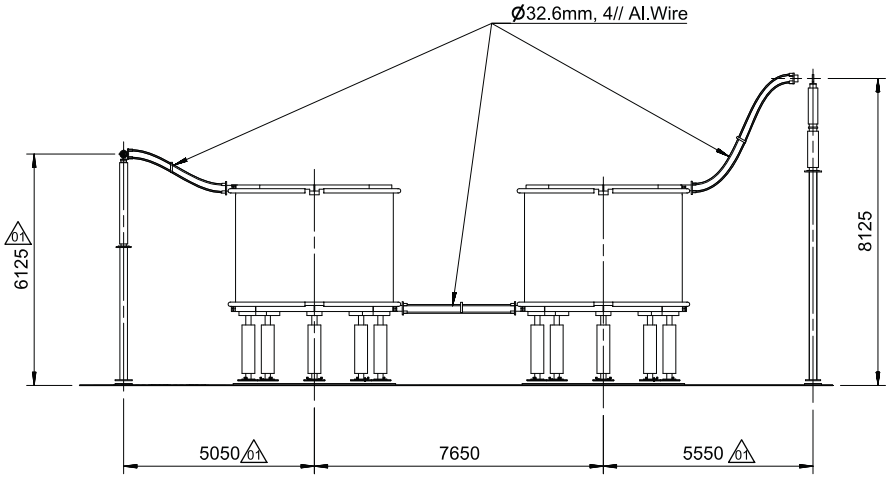

SECTION L-L

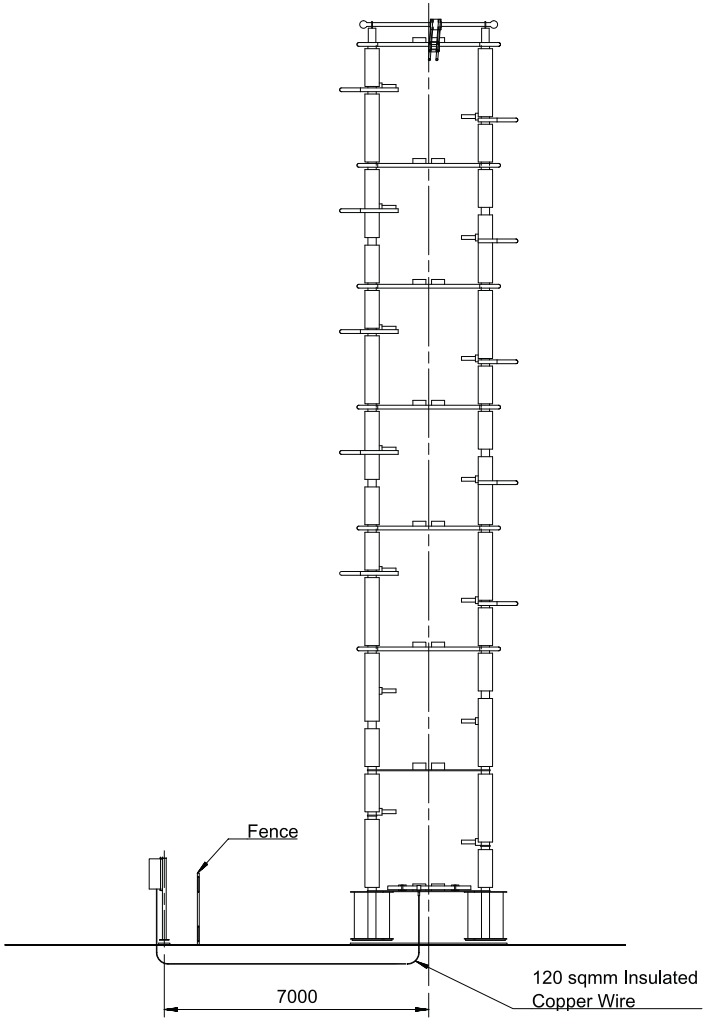

SECTION S-S 01

Rev	Revision	Prepared	Approved	Date
01	Revision made are marked. Also refer last page for revision notes.	Huzair, FM	Naik, Ashish	2018-06-29

Contract No: CC-CS/651-SR2/HVDC-3063/7G10/CA-I/5817-5821 dated 2017-01-25

Client: POWER GRID CORPORATION OF INDIA LIMITED (A Government of India Enterprise)

BHARAT HEAVY ELECTRICALS LTD. TRANSMISSION BUSINESS GROUP

Station Name: Raigarh

Classification No.: FJB-64

Based on: -

Prepared: Huzair, FM 2018-01-09

Approved: Naik, Ashish 2018-01-12

Doc. Kind: Layout drawing

Project name: ±800kV, 6000MW HVDC Raigarh-Pugalur Terminals

Title: Pole2 Layout&Sections DC Yard

Status: Issued

Item designation: -

Resp dept: PGGI/DCHUBTPM

Rev ind: 01

Language: -

ABB AB - HVDC

Document number: 1JNL100484-543

Sheet/of: 9 / 11

We reserve all rights in this document and in the information contained therein. Reproduction, use or disclosure to third parties without express authority is strictly forbidden. © ABB AB (SE)

This document is issued by means of a computerized system. The digitally stored original is electronically approved. The approved document has a name and date stamp in the approval field. A manual signature is not required.

(A2)

ANNEXURE-H (POLE-2)

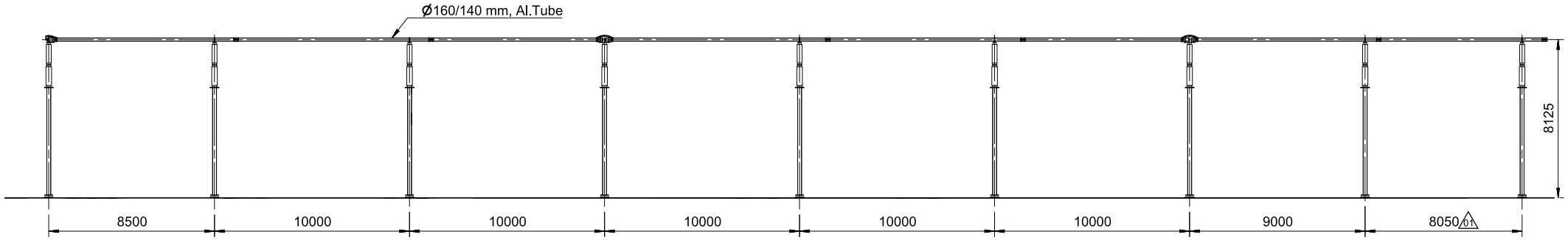

SECTION P-P

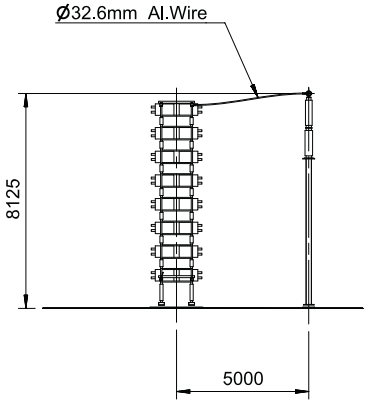

SECTION N-N

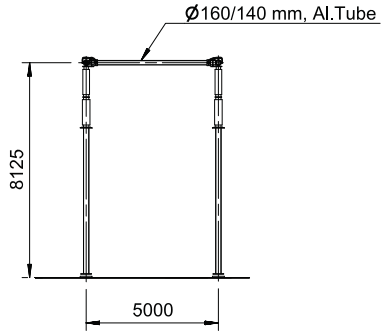

SECTION M-M 01

Rev	Revision	Prepared	Approved	Date
01	Revision made are marked. Also refer last page for revision notes.	Huzair, FM	Naik, Ashish	2018-06-29

Contract No: CC-CS/651-SR2/HVDC-3063/7/G10/CA-I/5817-5821 dated 2017-01-25

Client:

POWER GRID CORPORATION OF INDIA LIMITED
(A Government of India Enterprise)

पावरग्रिड

BHARAT HEAVY ELECTRICALS LTD.
TRANSMISSION BUSINESS GROUP

Station Name: Raigarh

Classification No.: FJB-64

Based on: -

Prepared: Huzair, FM 2018-01-09

Approved: Naik, Ashish 2018-01-12

Doc. Kind: Layout drawing

Project name: ±800kV, 6000MW HVDC Raigarh-Pugalur Terminals

Title: Pole2 Layout&Sections DC Yard

Status: Issued

Item designation: -

Resp dept: PGGI/DCHUBTPM

Rev ind: 01

Language: -

ABB AB - HVDC

Document number: 1JNL100484-543

Sheet/of: 10 / 11

We reserve all rights in this document and in the information contained therein. Reproduction, use or disclosure to third parties without express authority is strictly prohibited. © ABB AB (SE)

This document is issued by means of a computerized system. The digitally stored original is electronically approved. The approved document has a name in the table above. The approved document is valid without a manual signature. A manual signature is not required.

(A2)

ANNEXURE-H (POLE-2)

Revision History :

Revision No.	Date	Sheet No.	Revision Note
01	28.06.2018	Sheet 1	Notes updated
		Sheet 2	Equipment position updated & North East coordinates added
		Sheet 3	Section R-R & S-S are added & Section D-D Modified
		Sheet 5	Section view R-R & D-D are updated
			Dimensions and Tube size updated
		Sheet 6	Dimensions updated
		Sheet 7	Dimensions and Tube size updated
		Sheet 8	Dimensions updated
		Sheet 9	Dimensions updated & Section S-S added
		Sheet 10	Dimensions updated & Section M-M added.

We reserve all rights in this document and in the information contained therein. Reproduction, use or disclosure to third parties without express authority is strictly prohibited. © ABB AB (SE)

This document is issued by means of a computerized system. The digitally stored original is electronically approved. The approved document has a numerical value and is the approved version. A manual signature is not required.

Rev	Revision	Prepared	Approved	Date
01	Revision made are marked. Also refer last page for revision notes.	Huzair, FM	Naik, Ashish	2018-06-29

Contract No: CC-CS/651-SR2/HVDC-3063/7/G10/CA-I/5817-5821 dated 2017-01-25

Client:

POWER GRID CORPORATION OF INDIA LIMITED
(A Government of India Enterprise)

पावरग्रिड

BHARAT HEAVY ELECTRICALS LTD.
TRANSMISSION BUSINESS GROUP

Station Name: -

Classification No.: -

Based on: -

Prepared: Huzair, FM 2018-01-09

Approved: Naik, Ashish 2018-01-12

Doc. Kind: Layout drawing

Project name: ±800kV, 6000MW HVDC Raigarh-Pugalur Terminals

Title: Pole2 Layout&Sections DC Yard

Status: Issued

Item designation: -

Resp dept: PGGI/DCHUBTPM

Rev ind: 01

Language: -

ABB AB - HVDC

Document number: 1JNL100484-543

Sheet/of: 11 / 11

(A2)

ANNEXURE-H (POLE-3)

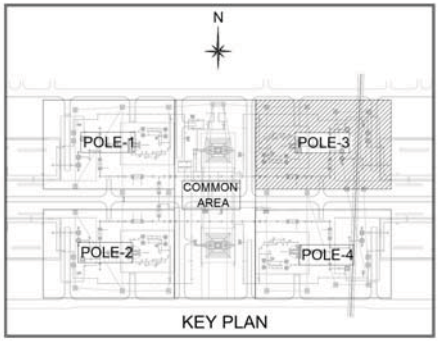

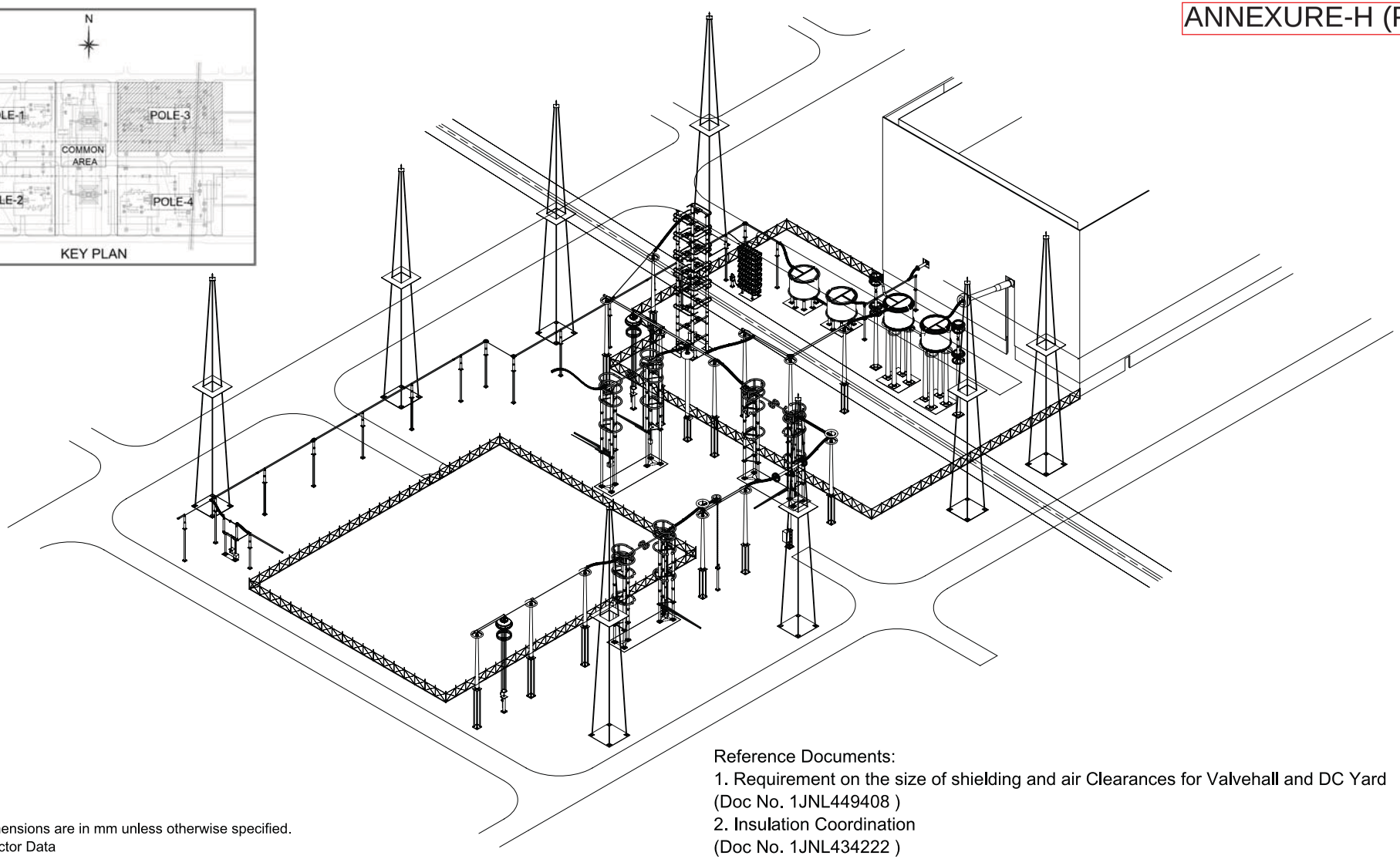

Reference Documents:
1. Requirement on the size of shielding and air Clearances for Valvehall and DC Yard (Doc No. 1JNL449408)
2. Insulation Coordination (Doc No. 1JNL434222)
3. Main Circuit Single Line Diagram, Raigarh (Doc No. 1JNL434227)
4.Dc Yard Layout and section Overview (Doc No. 1JNL100484-578)

Notes:
1. All Dimensions are in mm unless otherwise specified.
2. Conductor Data

01 Pole Bus:
- Ø250/226 mm Al.Tube
- Ø48.7mm AAC

Neutral Bus:
- Ø160/140mm Al.Tube
- Ø32.6mm ,AAC

Neutral Bus:
- Ø160/140mm Al.Tube
- Ø32.6mm ,AAC

01 Damping wire:
- Ø48.7mm AAC for Ø250/226 mm Al.Tube (Length of damping wire Shall be 2/3 of the length of the bus bar)
- Ø29.0mm AAC for Ø160/140 mm Al.Tube (Length of damping wire Shall be 2/3 of the length of the bus bar)

Rev	Revision	Prepared	Approved	Date
01	Revision made are marked. Also refer last page for revision notes.	Huzair, FM	Naik, Ashish	2018-06-29

Contract No: CC-CS/651-SR2/HVDC-3063/7/G10/CA-I/5817-5821 dated 2017-01-25

Client: POWER GRID CORPORATION OF INDIA LIMITED (A Government of India Enterprise)

BHARAT HEAVY ELECTRICALS LTD. TRANSMISSION BUSINESS GROUP

Station Name: Raigarh

Classification No.: FJB-64

Based on: -

Prepared: Huzair, FM 2018-01-10

Approved: Naik, Ashish 2018-01-12

Doc. Kind: Layout drawing

Project name: ±800kV, 6000MW HVDC Raigarh-Pugalur Terminals

Title: Pole3-Layout&Sections DC Yard

Status: Issued

Item designation: -

Resp dept: PGGI/DCHUBTPM

Rev ind: 01

Language: -

ABB AB - HVDC

Document number: 1JNL100484-562

Sheet/of: 1 / 11

We reserve all rights in this document and in the information contained therein. Reproduction, use or disclosure to third parties without express authority is strictly forbidden. © ABB AB (SE)

This document is issued by means of a computerized system. The digitally stored original is electronically approved. The approved document has a number and status in the document system. A manual signature is not required.

(A2)

ANNEXURE-H (POLE-3)

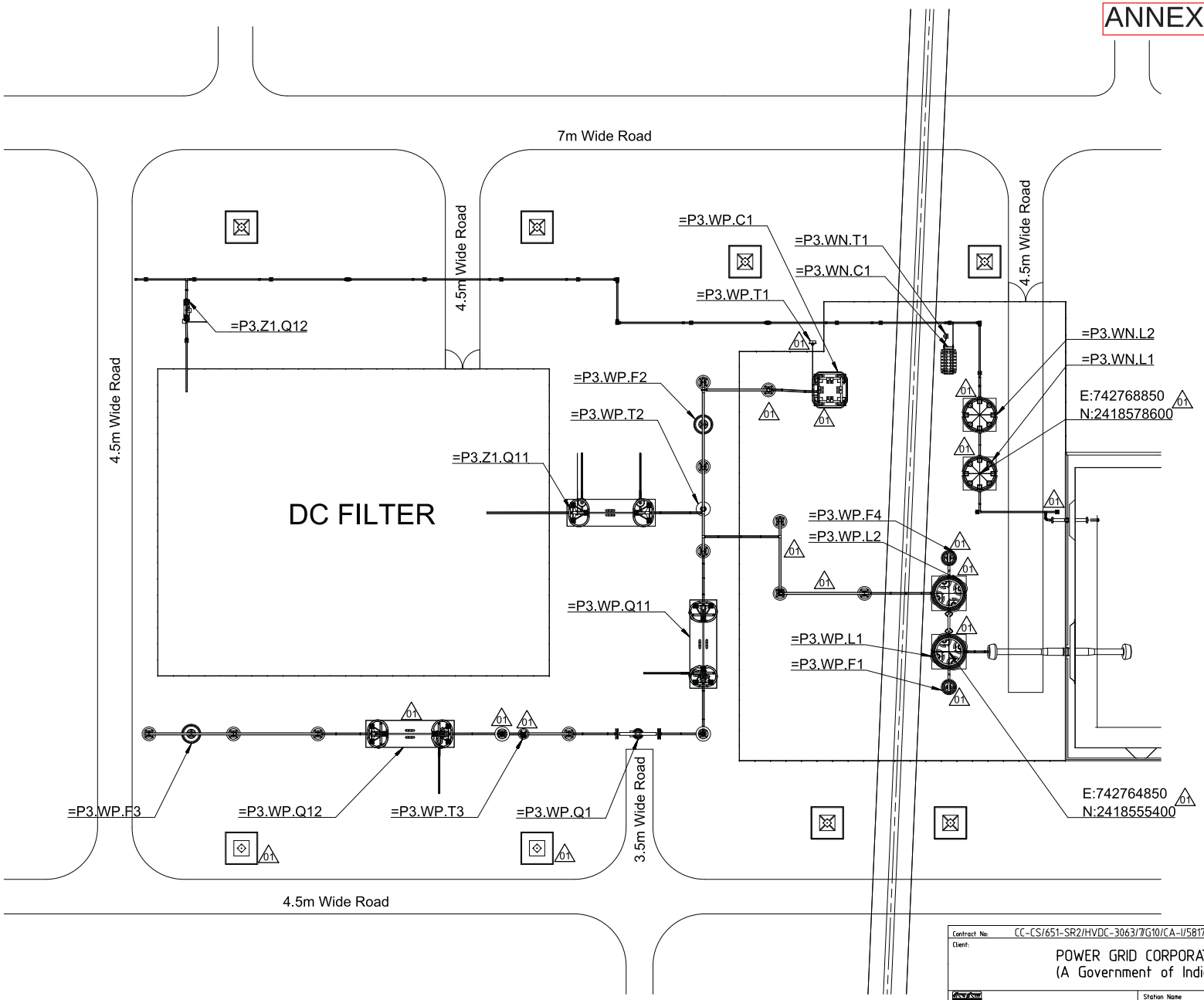

Rev	Revision	Prepared	Approved	Date
01	Revision made are marked. Also refer last page for revision notes.	Huzair, FM	Naik, Ashish	2018-06-29

Contract No: CC-CS/651-SR2/HVDC-3063/7G10/CA-I/5817-5821 dated 2017-01-25

Client:

POWER GRID CORPORATION OF INDIA LIMITED
(A Government of India Enterprise)

पावरग्रिड

BHARAT HEAVY ELECTRICALS LTD.
TRANSMISSION BUSINESS GROUP

Station Name: Raigarh

Classification No.: FJB-64

Based on: -

Prepared	Huzair, FM	2018-01-10
Approved	Naik, Ashish	2018-01-12
Doc. Kind	Layout drawing	

Project name: ±800kV, 6000MW HVDC Raigarh-Pugalur Terminals

Title: Pole3-Layout&Sections DC Yard

Status: Issued

Item designation: -

Resp dept: PGGI/DCHUBTPM

Rev ind: 01

Language: -

ABB AB - HVDC

Document number: 1JNL100484-562

Sheet/of: 2 / 11

We reserve all rights in this document and in the information contained therein. Reproduction, use or disclosure to third parties without express authority is strictly forbidden. © ABB AB (SE)

This document is issued by means of a computerized system. The digitally stored original is electronically approved. The approved document has a name and date stamped in the approval field. A manual signature is not required.

(A2)

ANNEXURE-H (POLE-3)

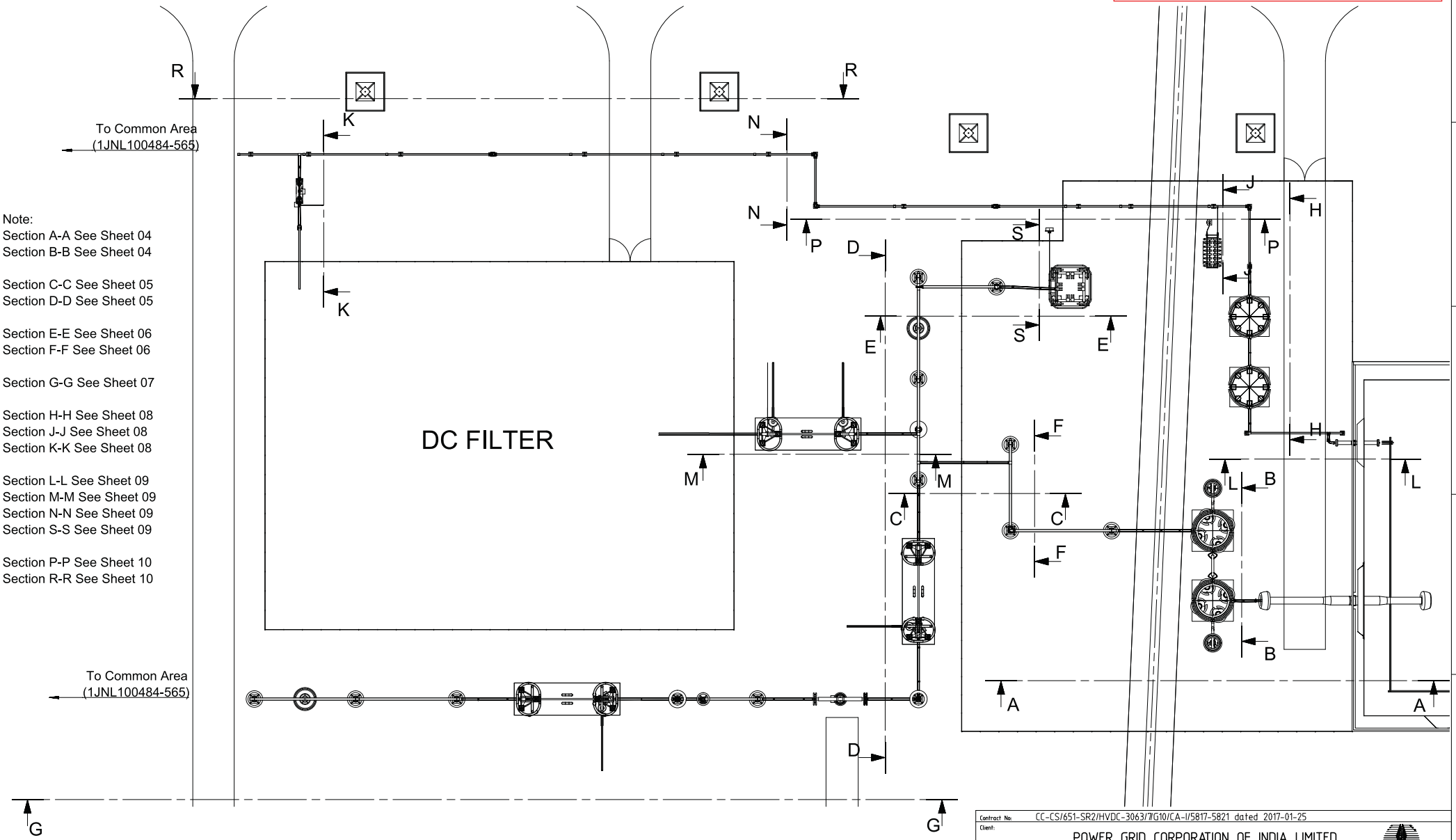

Note:
Section A-A See Sheet 04
Section B-B See Sheet 04

Section C-C See Sheet 05
Section D-D See Sheet 05

Section E-E See Sheet 06
Section F-F See Sheet 06

Section G-G See Sheet 07

Section H-H See Sheet 08
Section J-J See Sheet 08
Section K-K See Sheet 08

Section L-L See Sheet 09
Section M-M See Sheet 09
Section N-N See Sheet 09
Section S-S See Sheet 09

Section P-P See Sheet 10
Section R-R See Sheet 10

We reserve all rights in this document and in the information contained therein. Reproduction, use or disclosure to third parties without express authority is strictly forbidden. © ABB AB (SE)

This document is issued by means of a computerized system. The digitally stored original is electronically approved. The approved document has a name and date stamped in the approval field. A manual signature is not required.

Rev	Revision	Prepared	Approved	Date
01	Revision made are marked. Also refer last page for revision notes.	Huzair, FM	Naik, Ashish	2018-06-29

Contract No: CC-CS/651-SR2/HVDC-3063/7G10/CA-I/5817-5821 dated 2017-01-25

Client:
POWER GRID CORPORATION OF INDIA LIMITED
(A Government of India Enterprise)

BHARAT HEAVY ELECTRICALS LTD.
TRANSMISSION BUSINESS GROUP

Station Name: Raigarh
Classification No.: FJB-64

Based on: -
Prepared: Huzair, FM 2018-01-10
Approved: Naik, Ashish 2018-01-12
Doc. Kind: Layout drawing

Project name: ±800kV, 6000MW HVDC Raigarh-Pugalur Terminals

Title: Pole3-Layout&Sections DC Yard
Status: Issued
Item designation: -
Resp dept: PGGI/DCHUBTPM
Rev ind: 01
Language: -

ABB AB - HVDC

Document number: 1JNL100484-562

Sheet/of: 3 / 11

(A2)

ANNEXURE-H (POLE-3)

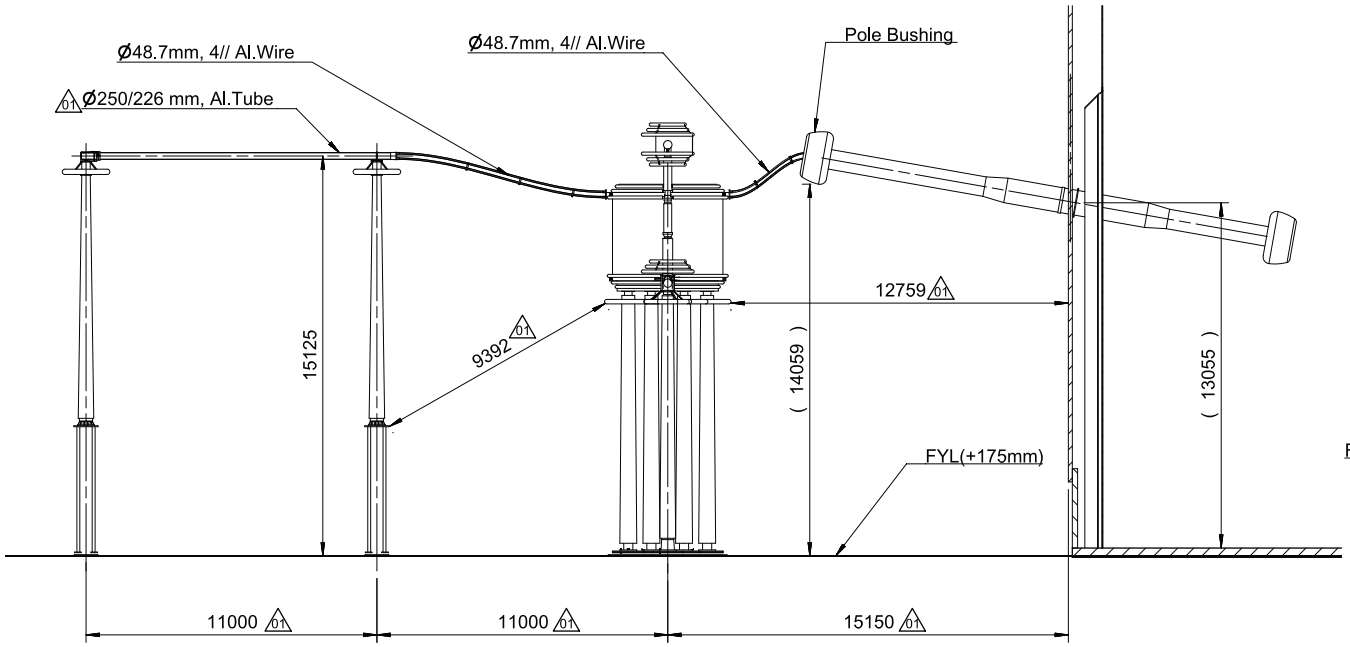

SECTION A-A

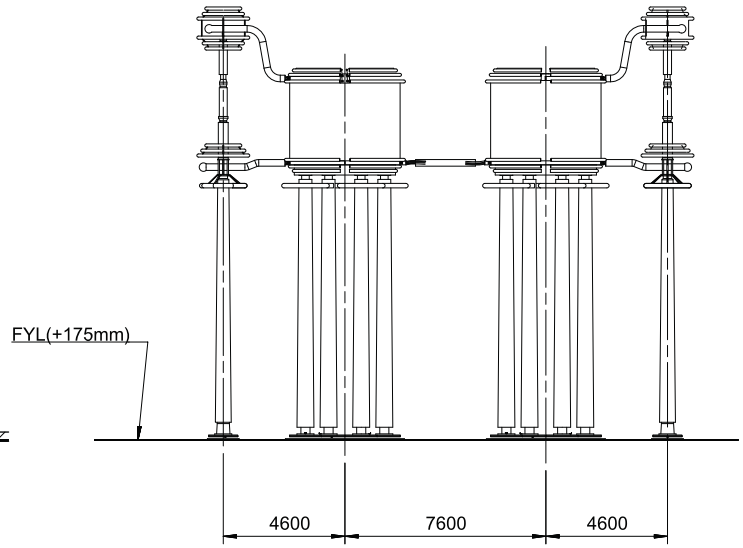

SECTION B-B

Rev	Revision	Prepared	Approved	Date
01	Revision made are marked. Also refer last page for revision notes.	Huzair, FM	Naik, Ashish	2018-06-29

Contract No: CC-CS/651-SR2/HVDC-3063/7G10/CA-I/5817-5821 dated 2017-01-25

Client:

POWER GRID CORPORATION OF INDIA LIMITED
(A Government of India Enterprise)

पावरग्रिड

BHARAT HEAVY ELECTRICALS LTD. TRANSMISSION BUSINESS GROUP

Station Name: Raigarh

Classification No.: FJB-64

Based on: -

Prepared: Huzair, FM 2018-01-10

Approved: Naik, Ashish 2018-01-12

Doc. Kind: Layout drawing

Project name: ±800kV, 6000MW HVDC Raigarh-Pugalur Terminals

Title: Pole3-Layout&Sections DC Yard

Status: Issued

Item designation: -

Resp dept: PGGI/DCHUBTPM

Rev ind: 01

Language: -

ABB AB - HVDC

Document number: 1JNL100484-562

Sheet/of: 4 / 11

We reserve all rights in this document and in the information contained therein. Reproduction, use or disclosure to third parties without express authority is strictly prohibited. © ABB AB (SE)

This document is issued by means of a computerized system. The digitally stored original is electronically approved. The approved document has a name and date stamped in the approval field. A manual signature is not required.

(A2)

ANNEXURE-H (POLE-3)

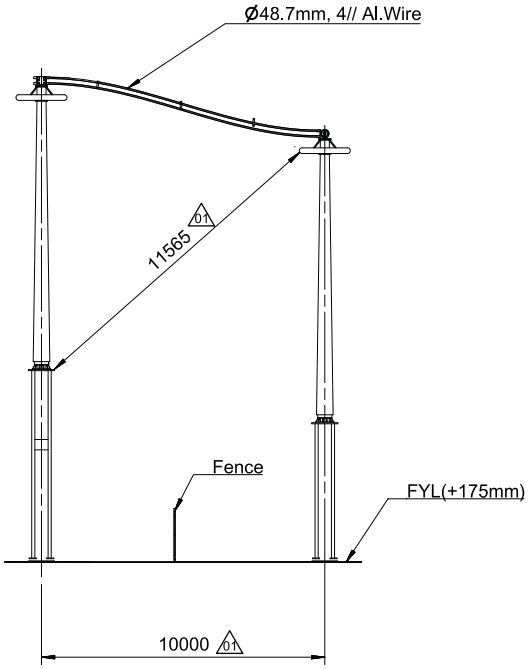

SECTION C-C 01

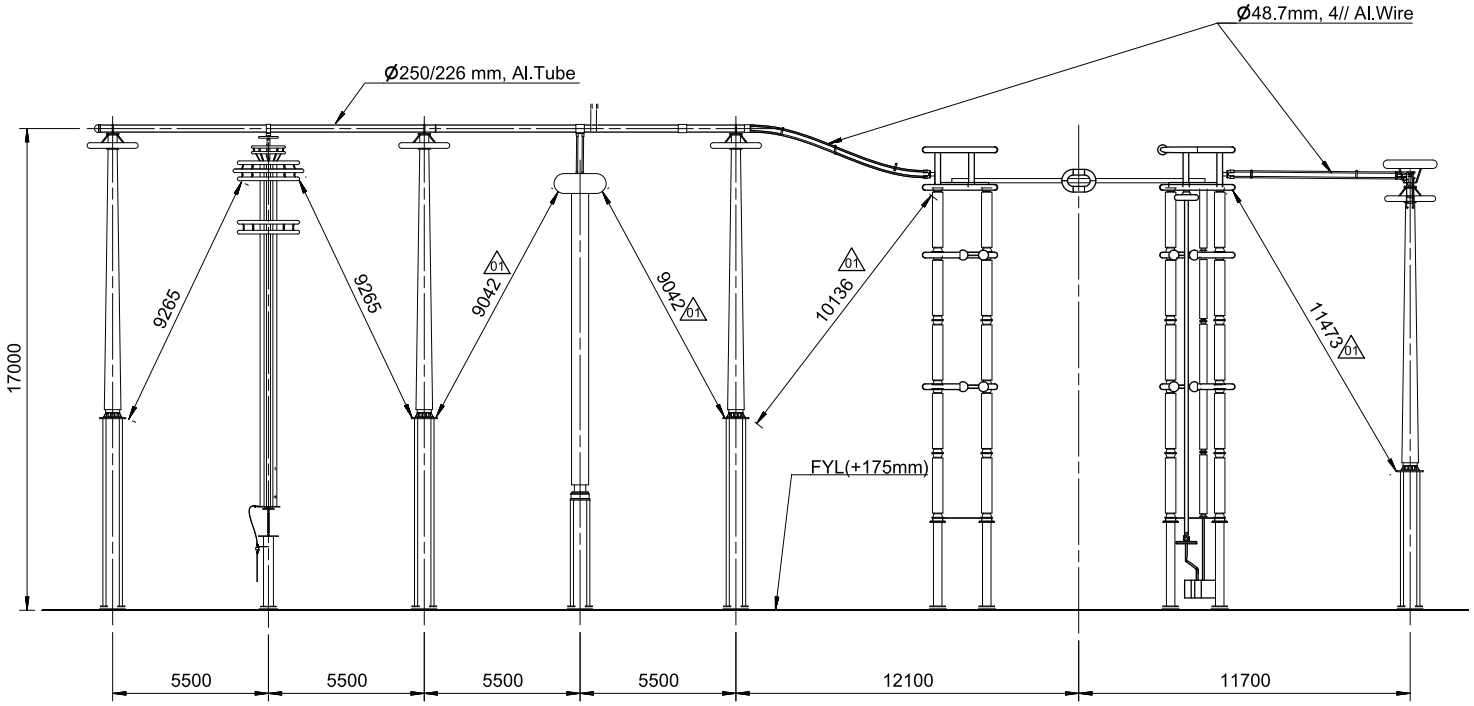

SECTION D-D

Rev	Revision	Prepared	Approved	Date
01	Revision made are marked. Also refer last page for revision notes.	Huzair, FM	Naik, Ashish	2018-06-29

Contract No: CC-CS/651-SR2/HVDC-3063/7G10/CA-I/5817-5821 dated 2017-01-25

Client: POWER GRID CORPORATION OF INDIA LIMITED (A Government of India Enterprise)

BHARAT HEAVY ELECTRICALS LTD. TRANSMISSION BUSINESS GROUP

Station Name: Raigarh

Classification No.: FJB-64

Based on: -

Prepared: Huzair, FM 2018-01-10

Approved: Naik, Ashish 2018-01-12

Doc. Kind: Layout drawing

Project name: ±800kV, 6000MW HVDC Raigarh-Pugalur Terminals

Title: Pole3-Layout&Sections DC Yard

Status: Issued

Item designation: -

Resp dept: PGGI/DCHUBTPM

Rev ind: 01

Language: -

ABB AB - HVDC

Document number: 1JNL100484-562

Sheet/of: 5 / 11

We reserve all rights in this document and in the information contained therein. Reproduction, use or disclosure to third parties without express authority is strictly forbidden. © ABB AB (SE).

This document is issued by means of a computerized system. The digitally stored original is electronically approved. The approved document has a number and date stamped in the approval field. A manual signature is not required.

(A2)

ANNEXURE-H (POLE-3)

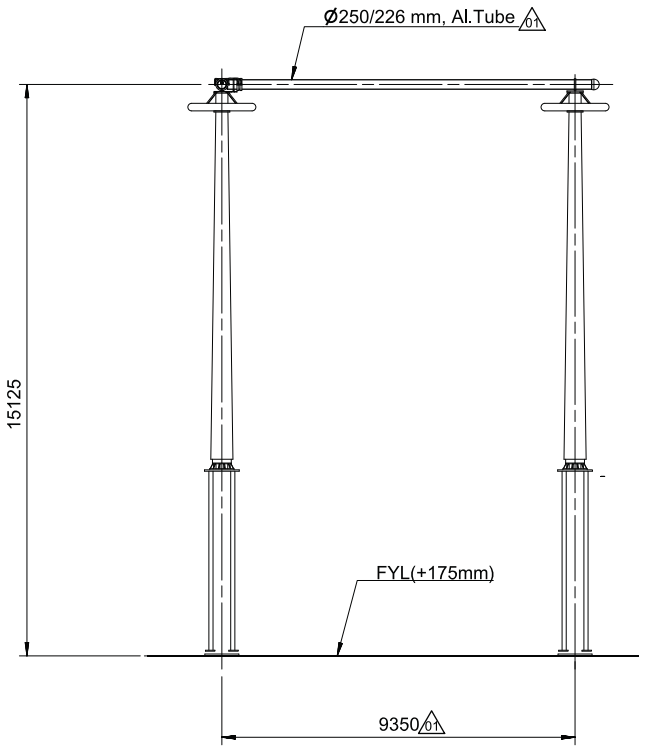

SECTION F-F

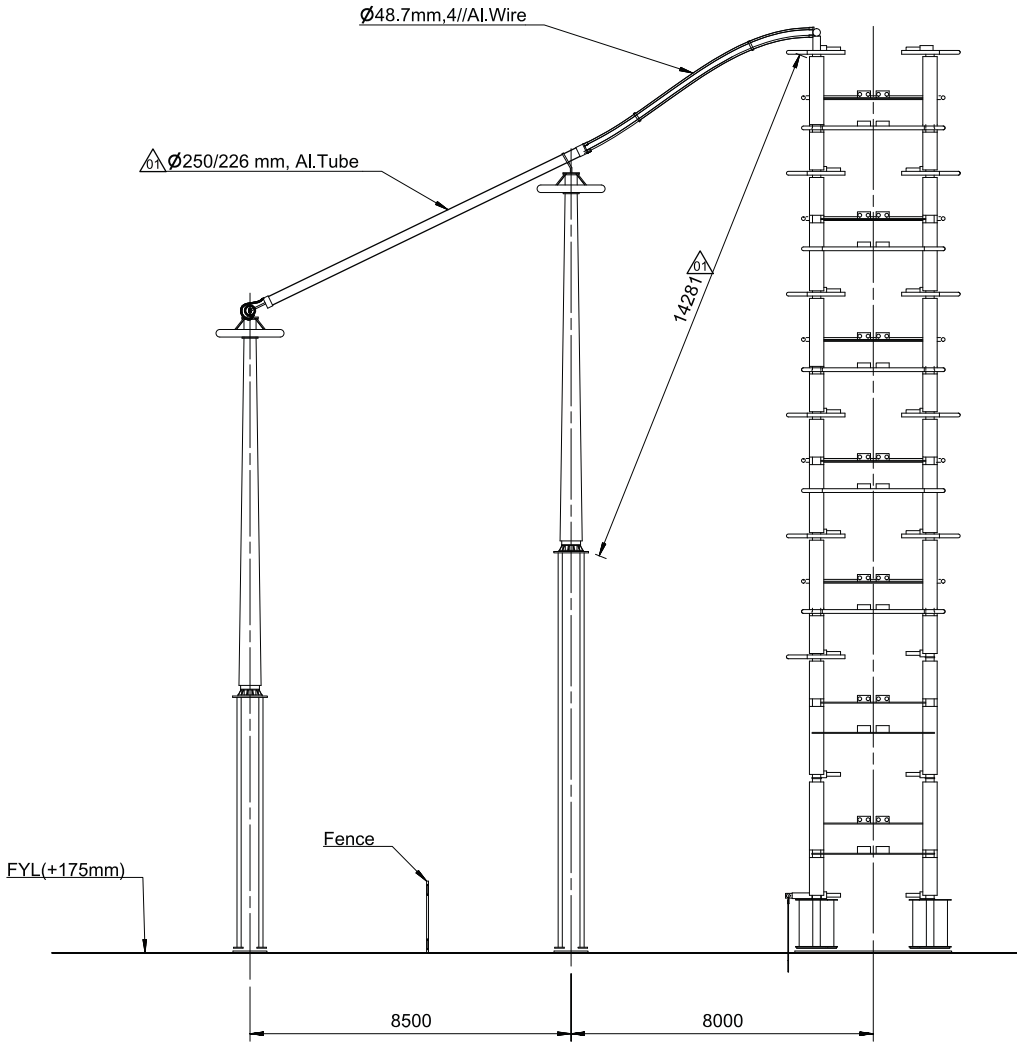

SECTION E-E

01	Revision made are marked. Also refer last page for revision notes.	Huzair, FM	Naik, Ashish	2018-06-29
Rev	Revision	Prepared	Approved	Date

Contract No: CC-CS/651-SR2/HVDC-3063/7G10/CA-I/5817-5821 dated 2017-01-25

Client:

POWER GRID CORPORATION OF INDIA LIMITED
(A Government of India Enterprise)

पावरग्रिड

BHARAT HEAVY ELECTRICALS LTD.
TRANSMISSION BUSINESS GROUP

Station Name: Raigarh

Classification No.: FJB-64

Based on: -

Prepared: Huzair, FM 2018-01-10

Approved: Naik, Ashish 2018-01-12

Doc. Kind: Layout drawing

Project name: ±800kV, 6000MW HVDC Raigarh-Pugalur Terminals

Title: Pole3-Layout&Sections DC Yard

Status: Issued

Item designation: -

Resp dept: PGGI/DCHUBTPM

Rev ind: 01

Language: -

ABB AB - HVDC

Document number: 1JNL100484-562

Sheet/of: 6 / 11

We reserve all rights in this document and in the information contained therein. Reproduction, use or disclosure to third parties without express authority is strictly prohibited. © ABB AB (SE).

This document is issued by means of a computerized system. The digitally stored original is electronically approved. The approved document has a name and date stamp. Make sure that the approved, A manual signature is not required.

(A2)

ANNEXURE-H (POLE-3)

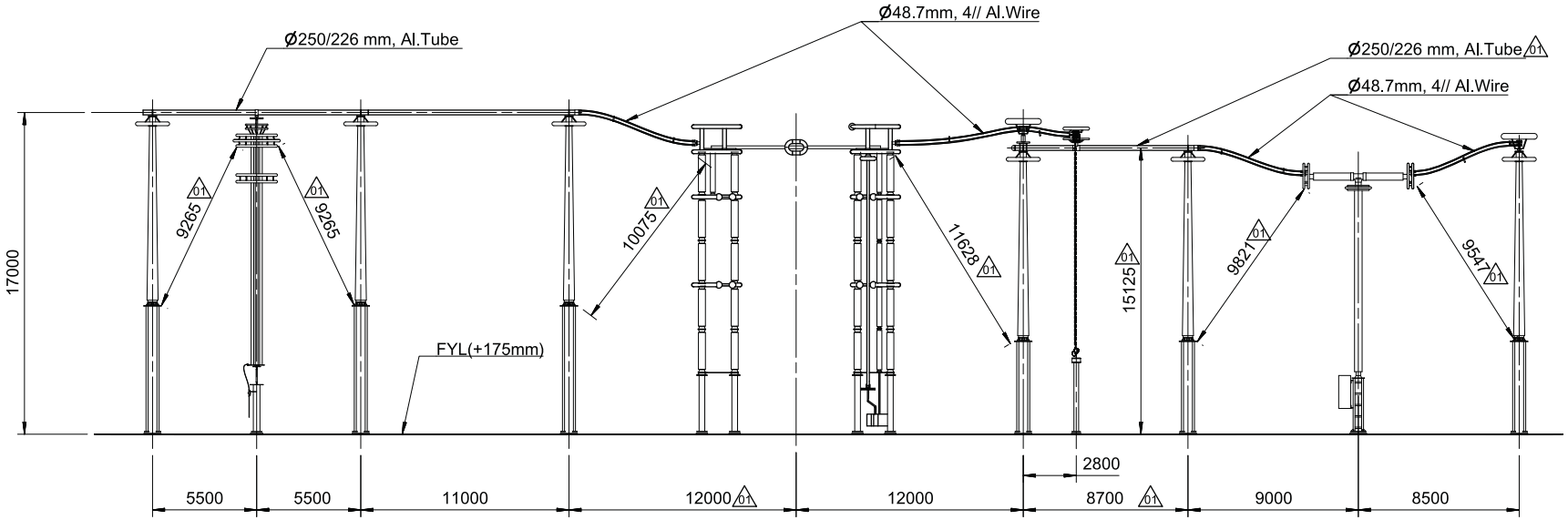

SECTION G-G

Rev	Revision	Prepared	Approved	Date
01	Revision made are marked. Also refer last page for revision notes.	Huzair, FM	Naik, Ashish	2018-06-29

Contract No: CC-CS/651-SR2/HVDC-3063/7G10/CA-I/5817-5821 dated 2017-01-25

Client:

POWER GRID CORPORATION OF INDIA LIMITED
(A Government of India Enterprise)

पावरग्रिड

BHARAT HEAVY ELECTRICALS LTD. TRANSMISSION BUSINESS GROUP

Station Name: Raigarh

Classification No.: FJB-64

Based on: -

Prepared: Huzair, FM 2018-01-10

Approved: Naik, Ashish 2018-01-12

Doc. Kind: Layout drawing

Project name: ±800kV, 6000MW HVDC Raigarh-Pugalur Terminals

Title: Pole3-Layout&Sections DC Yard

Status: Issued

Item designation: -

Resp dept: PGGI/DCHUBTPM

Rev ind: 01

Language: -

ABB AB - HVDC

Document number: 1JNL100484-562

Sheet/of: 7 / 11

We reserve all rights in this document and in the information contained therein. Reproduction, use or disclosure to third parties without express authority is strictly prohibited. © ABB AB (SE)

This document is issued by means of a computerized system. The digitally stored original is electronically approved. The approved document has a name and date stamp. The approved document has a name and date stamp. A manual signature is not required.

(A2)

ANNEXURE-H (POLE-3)

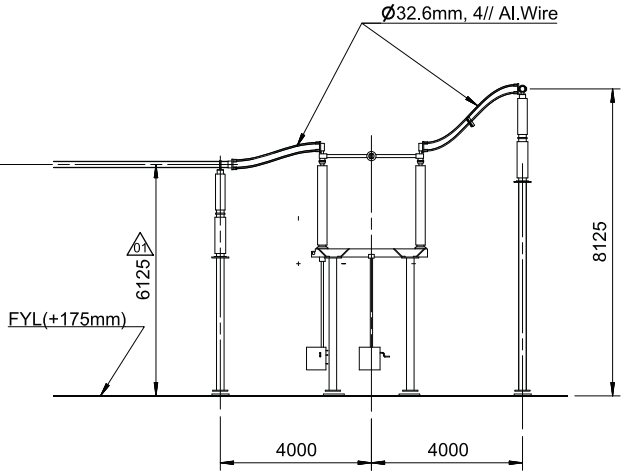

SECTION K-K

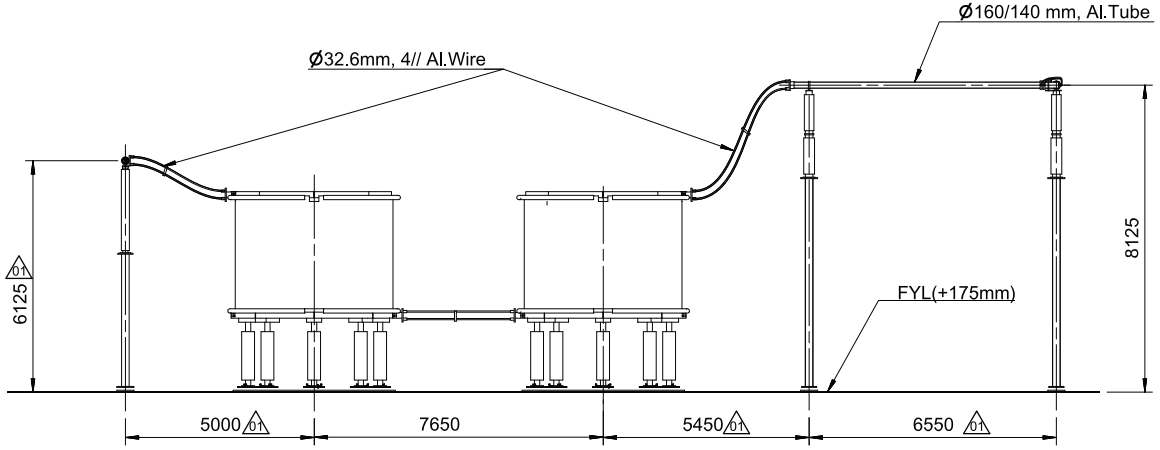

SECTION H-H

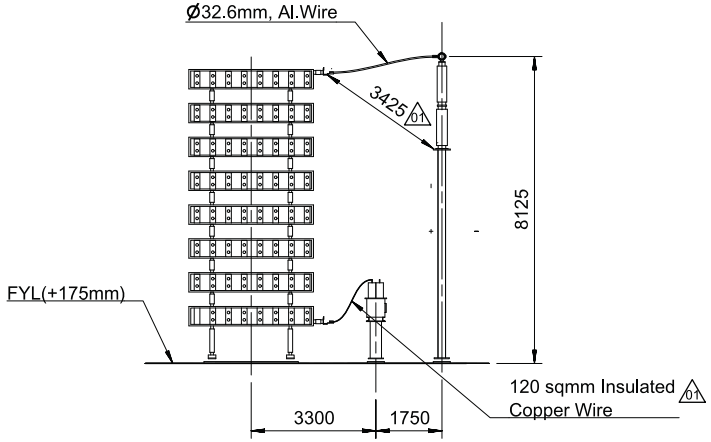

SECTION J-J

Rev	Revision	Prepared	Approved	Date
01	Revision made are marked. Also refer last page for revision notes.	Huzair, FM	Naik, Ashish	2018-06-29

Contract No: CC-CS/651-SR2/HVDC-3063/7G10/CA-I/5817-5821 dated 2017-01-25

Client:

POWER GRID CORPORATION OF INDIA LIMITED
(A Government of India Enterprise)

BHARAT HEAVY ELECTRICALS LTD.
TRANSMISSION BUSINESS GROUP

Station Name: Raigarh

Classification No.: FJB-64

Based on: -

Prepared: Huzair, FM 2018-01-10

Approved: Naik, Ashish 2018-01-12

Doc. Kind: Layout drawing

Project name: ±800kV, 6000MW HVDC Raigarh-Pugalur Terminals

Title: Pole3-Layout&Sections DC Yard

Status: Issued

Item designation: -

Resp dept: PGGI/DCHUBTPM

Rev ind: 01

Language: -

ABB AB - HVDC

Document number: 1JNL100484-562

Sheet/of: 8 / 11

We reserve all rights in this document and in the information contained therein. Reproduction, use or disclosure to third parties without express authority is strictly prohibited. © ABB AB (SE).

This document is issued by means of a computerized system. The digitally stored original is electronically approved. The approved document has a name in the table above in the approved field. A manual signature is not required.

ANNEXURE-H (POLE-3)

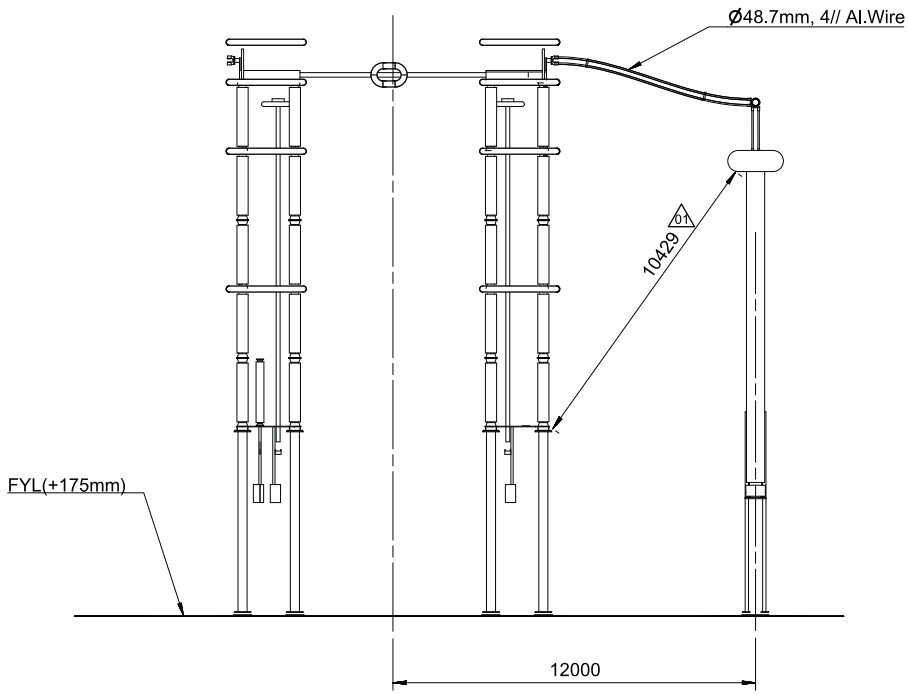

SECTION M-M

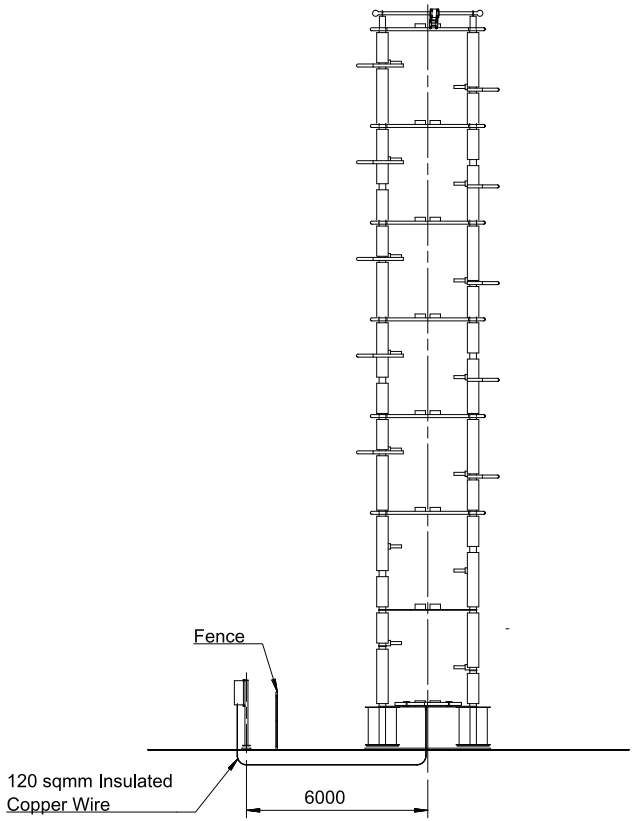

SECTION S-S 01

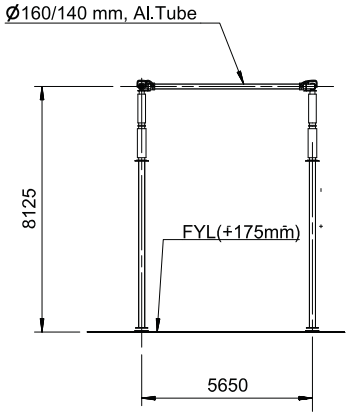

SECTION N-N

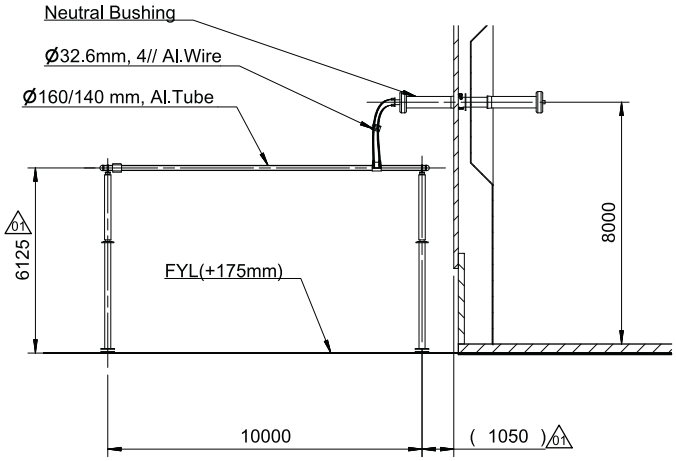

SECTION L-L

Rev	Revision	Prepared	Approved	Date
01	Revision made are marked. Also refer last page for revision notes.	Huzair, FM	Naik, Ashish	2018-06-29

Contract No: CC-CS/651-SR2/HVDC-3063/7G10/CA-I/5817-5821 dated 2017-01-25

Client:

POWER GRID CORPORATION OF INDIA LIMITED
(A Government of India Enterprise)

पावरग्रिड

BHARAT HEAVY ELECTRICALS LTD. TRANSMISSION BUSINESS GROUP

Station Name: Raigarh

Classification No.: FJB-64

Based on: -

Prepared: Huzair, FM 2018-01-10

Approved: Naik, Ashish 2018-01-12

Doc. Kind: Layout drawing

Project name: ±800kV, 6000MW HVDC Raigarh-Pugalur Terminals

Title: Pole3-Layout&Sections DC Yard

Status: Issued

Item designation: -

Resp dept: PGGI/DCHUBTPM

Rev ind: 01

Language: -

ABB AB - HVDC

Document number: 1JNL100484-562

Sheet/of: 9 / 11

We reserve all rights in this document and in the information contained therein. Reproduction, use or disclosure to third parties without express authority is strictly forbidden. © ABB AB (SE).

This document is issued by means of a computerized system. The digitally stored original is electronically approved. The approved document has a name and date in place of a handwritten signature. A manual signature is not required.

(A2)