1X250 MW NSCPL ROURKELA PROJECT

TECHNICAL SPECIFICATION
OF
CONDENSATE FLOW MODEL STUDY
FOR WET STACKS

SPECIFICATION NO: **PE - TS – 427 -100 –N001**

BHARAT HEAVY ELECTRICALS LIMITED

POWER SECTOR

PROJECT ENGINEERING MANAGEMENT

NEW DELHI, INDIA

CONTENTS

1. INTENT OF ENQUIRY/ SPECIFICATION

2. SCOPE OF WORK

3. DELIVERY SCHEDULE

4. SUGGESTIVE DRAWINGS/ DOCUMENTS SUBMISSION

5. DOCUMENTS TO BE SUBMITTED WITH BID

ENCLOSURES:

Annexure-I: Project information

Annexure-II: Flue gas Process Data

Annexure-III: GA of chimney

Annexure-IV: Liner Detail Can type C

Annexure-V: Details of liner expansion joint

Annexure-VI: FGD Layout

Annexure-VII: Wind rose diagram

Annexure-VIII: Details of liner insulation

Annexure –IX: Detail of gas sampling port

1.00.00 INTENT OF SPECIFICATION:

The intent of this enquiry/ specification is to carry out the Wet stack flow model study of 1x250 MW NSPCL Rourkela project for complete duct system from absorber outlet to the top of the stack, design and optimization of gas flow and liquid collection system to mitigate stack liquid discharge (SLD) and shell corrosion, Preparation of final report and recommendations, preparation of drawings/ documents for execution of collection system, obtaining approval on documents from BHEL/ Customer/ customer's consultant, Preparation of BOQ, preparation of bought out item specification, procurement assistance for specialized items, site visit as specified later in the specification & as necessary for completeness in all respects and for efficient & trouble free operation of chimney and liquid collection system for project.

2.00.00 SCOPE OF WORK:

The scope of study shall be from mist eliminator outlet to top of the stack. Wet stack model study shall consist of the following:

- Condensation calculations & design of condensate collection system
- A scale physical flow model for liquid collector system (LCS) design.
- A computational flow model for plume downwash analysis.
- A physical or computational flow model for CEMS elevation flow performance.
- Design of optimum choke geometry if required.
- Review & Approval of liquid collector system construction drawings.
- Site inspection & supervision for 7 days to verify and evaluate LCS system performance prior to commissioning.

The objective of the wet stack study shall be to maximize liquid collection downstream of the mist eliminators and to preclude ground level rainout from the stack by recommending experimentally developed, tested, and optimized liquid collection devices and drainage systems to return collected liquid to the absorber with minimum re-entrainment.

The following codes and standard shall be followed for the conductance of this study:

- Revised wet stack design guidelines, 2012 by EPRI
- ACI 307 (American concrete institute code requirement for RC chimney
- EPRI report CS-2520 Entrainment in wet stack 1982
- EPRI report TR 107099 Wet stack deign guide 1996
- EPRI report TR-109380 guidelines for fluid dynamic design of power plant ducts, 1998
- EPRI report GS-6984 FGD mist eliminator system design and specification guide
- CICIND, ICAC, US EPA and other international and other latest codes and standards.

The study shall be carried out by design methods and tools:

- Preliminary design review based on experience
- Laboratory flow modeling -3-D
- Computer flow modelling -3-D
- Computer program calculations – 2-D

2.01.01 Preliminary design review based on experience

Based on the inputs furnished as per enclosed Annexure with this specification for the duct work and stack, preliminary design review need to be carried out to estimate the liquid collection requirements, predict the condensation rate in the duct & stack and perform the preliminary system design.

2.01.02 Condensation calculations using analytical / numerical tools

Gas flow study should include the calculation for the condensate formed and / or liquid carry over. The condensate flow study should include condensate quantity formed due to:

i) Thermal condensation on the liners
ii) Adiabatic condensation
iii) Turbulence of flue gas flow near entry of the stack
iv) At the outlet duct from absorber mist eliminator outlet
v) Contribution from mist eliminator carryover in case of normal wash cycle or mist eliminator become fouled with time.

Detailed calculations along with the design basis for condensation rate in the duct from absorber outlet to the top of the chimney for the worst operating case, minimum boiler load and design conditions shall be furnished as a function of ambient air temperature, wind velocity and liner design variables in the report with an accuracy of ±10%.

2.01.03 Design of Condensate collection & drainage system

(i) Size of gutter(s) along with inner surface of Chimney flue can and inlet duct from absorber outlet to inlet of chimney flue can, such that condensate is collected efficiently and drained off with a drainage system till its terminal point at ground outside the duct & Chimney shell.

(ii) As the gutter shall be made of Titanium/C-276 as compatible with inner surface, suitable shape, size and thickness is to be recommended so that gas flow occurs efficiently.

(iii) The size, thickness, location and material of condensate drainage pipe shall be included in recommendation. It is envisaged that pipe from gutter to outside of Chimney liner shall be of Titanium/C-276 and thereafter the drainage pipe shall be of FRP up to the collection pit. Routing of the drain pipes shall be provided by the bidder.

After the flow-model study is performed, accordingly design of liquid-collection devices and drain system for the full scale Wet Stack is to be carried out and detailed drawings, design basis and calculations shall be submitted.

2.01.04 Computational 3-D fluid-dynamic-model study (CFD Analysis)

Performance of a computational 3-D fluid-dynamic-model study of the minimum upper one third of the stack liner and shell to evaluate downwash of the wet plume. CFD model shall include the surrounding structure which are significant to wind/ plume flow patterns preferably minishell, external handrails and floor at the stack outlet.

A computational model of the stack shell and liner(s) shall be constructed for the plume downwash study. The plume downwash study shall include analysis of the local wind/temperature data to identify the occurrence of critical wind and temperature conditions. The plume downwash study shall identify the stack velocity and ambient wind conditions that produce downwash and the maximum extent of expected downwash throughout the year for shell corrosion protection. For sites where ambient temperatures reach freezing, a “winter” period shall be simulated to evaluate icing potential on the stack.

Depending on the results of the downwash study, there may be a need to develop an optimum choke geometry, if required, to minimize the plume downwash & liquid impingement of the shell. This includes evaluation of liquid collectors and drains to prevent re-entrainment and discharge of large droplets from the top of the choke.

Bidder to use the latest software for the CFD modelling and shall submit the model along with results in form of contours and vector plots of velocity, pressure, concentration and temperature at various test locations and summarized in tabular format. The model shall be tested with various simulated operating, minimum and

design flow conditions, maximum wind speed, wind orientations, to evaluate the potential of the downwash.

The Bidder shall review Minishell details (Liner extension above roof) enclosed as an Annexure and confirm the liner-extension design with their recommendation.

In case of the excessive downwash or reversed flow at stack exit or liquid exiting the stack liner and forming/ depositing on the top of the concrete shell, bidder to provide the corrective actions, design modifications and evaluate the modified geometry.

2.02.00 Physical model of the system

An experimental gas-flow-model study to design and develop collectors for the duct and stack downstream of the mist eliminator that will collect and drain liquid from the walls to prevent re-entrainment.

Laboratory Physical model study shall include the following details for wet stack design:

i. Estimation of the total liquid load on the liner surface as a result of thermal and adiabatic condensation. This estimate shall be based on the liner and shell geometry, thickness, materials of construction and the flue gas–flow rate and properties over a range of expected plant-operating conditions and worst-case ambient weather conditions considering the mist eliminator fouling / wash cycles.

ii. Design and optimization of liquid collectors in the absorber-outlet hood, absorber-outlet ducts, stack-liner entrance region and stack liner outlet to prevent SLD. The collectors will collect liquid from surfaces, re-entrainment, and guide the liquid to locations where it can be drained out of the system. This development work shall be conducted on a scale model of the wet duct and stack system, from the outlet of each absorber's mist eliminator to four diameters of stack-liner above the top of the breech (inlet duct entry level to chimney). Model scales shall be minimum 1:12 and to be selected to ensure accurate modeling results for all tested parameters. The model scale shall be finalized after the award of the contract. The design should be of integrated complete system of liquid collectors from absorber outlet to chimney top for each unit.

iii. The laboratory test includes details of liquid re-entrainment and drainage behavior over the expected range of unit operating conditions and confirm the stack-liner design velocity.

iv. Physical model shall include any internal devices larger than 3 inches in diameter/protrusion that may affect the flow, such as structural members, internal dampers, flow controls, and expansion joints. The model shall be mainly constructed from transparent acrylic or plastic, sheet metal, or coated rigid tubing such that it is suitable for wet testing. Modeled flow control and liquid collection devices may be constructed with sheet metal, or other suitable construction materials, so long as the scaled liquid flow performance is not adversely affected.

v. The physical model shall be tested for pressure and velocity profiles at selected cross sections through the ducts and liner. A velocity traverse shall be conducted within the modeled liner to ensure that the cyclonic flow levels are within the U.S. EPA Method 1 recommended limitations for CEMS operation. In the event testing indicates that cyclonic flow could be a concern at the continuous emissions monitoring system (CEMS) elevation, a simulation, either by extension to the physical model or using a computational fluid dynamic model, shall be performed to evaluate this flow at the CEMS level. If needed, corrective devices shall be designed and tested to reduce stack swirl at the CEMS elevation.

vi. The physical model shall be tested by introducing liquid in a size and quantity such that the model shall approximately match the two-phase flow modeling requirements for droplet trajectory and loading. This testing shall be used to locate and design the liquid collection devices and drains.

vii. Evaluation of re-entrainment at liner-expansion joints in the laboratory test rig and development of a unit-specific liquid-collector geometry to collect and drain the liquid from the liner-expansion joints.

viii. Using this model effective internal liquid collection devices shall be developed and optimized to improve the droplet deposition and liquid collection in the stack as well as to prevent the re-entrainment of droplets from liquid pools and films.

ix. Bidder shall submit the detailed standard procedure for carrying out the physical model study at vendor lab for customer information / approval before the conductance of physical model study at lab.

2.03.00 Site inspection & supervision

Bidder to perform an onsite inspection as per the EPRI Revised Wet Stack Design Guideline, 2012. Site visit should occur for 7 days' time during the construction phase, when liquid collection system is nearing completion, to inspect the liquid collection system as installed to ensure that the designed flow controls, liquid collectors, drains, and drain protection are installed properly and shall perform as intended. Bidder to provide the site inspection report to validate the design and installation.

The onsite inspection should confirm that the liquid-collection system has been fabricated and installed correctly and to identify any deviations to the recommended design as a result of field modifications made to ease installation. The bidder shall also ensure the liquid collection system is installed properly.

The key deliverables from this study are:

a) Bidder to furnish the total quantity of condensate formed from absorber mist eliminator outlet to top of the stack.
b) Bidder to furnish the number, sizing and location of required various liquid collectors/ gutters, their shape, design of its evacuation piping from inside the chimney to outside and their Influence on the flow in the chimney liner.
c) Flow model study shall minimize system pressure losses and optimize collection and drainage and provide expected field wet stack system pressure loss across expected load range.
d) Bidder to achieve minimum stack liquid discharge. In case of excessive stack liquid discharge, possible means of modification to duct and stack geometry need to be proposed by bidder for improvement.
e) Bidder to ensure the design of effective liquid collection system for various plant load operating conditions and absorber combinations.
f) Bidder to furnish the comparison of the experimental and computer modelling.
g) Bidder to recommend modifications to prevent the chimney liquid discharge issues and to make the geometry more favorable for liquid collection.
h) Bidder to furnish the fabrication/installation drawings after the completion of model study for fabrication.
i) Bidder to identify appropriate liner system and gas inlet geometries (including flow control devices) to ensure homogeneous gas flow conditions and achieve cyclonic free flow distribution at the CEMS location.
j) Bidder to provide recommendations and design for sealing drain piping/ seal pots to inhibit backflow.

k) Bidder to recommend drain protection devices to minimize pluggage occurrences and recommend method for monitoring liquid collection drainage flow in case of liquid collection system pluggage and SLD problems.

l) Bidder to provide stack outlet modifications, such as liner extensions or chokes, to minimize stack icing occurrences and to provide Stack shell coating requirements to protect concrete shells from corrosion due to plume downwash.

m) Bidder to evaluate the plume downwash and recommend modifications to minimize downwash using CFD model preferably at reduced unit load operation and high wind speed conditions.

n) Bidder to provide the drawings/documents for the necessary provisions in Chimney during the course of this study, if applicable, to carry out the performance test for wet stack at site in future.

2.04.00 GENERAL

a) Bidder to furnish the detailed Master drawing list for wet stack flow model study for BHEL and customer approval.

b) Bidder to provide technical advice/ recommendations/ assistance & solutions regarding site related construction problems related to condensate collection and drainage system in the duct and chimney as and when required including site visits, participation in meetings through VC/WEB with BHEL/ customer/ customer's consultant.

c) The physical model study may be witnessed by BHEL / Plant Owner for approximately 3 days. Intimation for the witnessing shall be provided by the bidder 4 weeks prior to conductance of physical model test at vendor lab. Video streaming facility shall also be provided for witnessing the physical model test from India. In addition, complete physical model test including the flow patterns and droplets trajectory shall be recorded on video CD which shall be provided after the physical model study.

d) The physical model shall be stored at the vendor lab at no cost for a period of 1 year after the submission of final report and completion of the study. Thereafter its further disposal or storage shall be decided after the award of the contract on the cost basis. Optional prices may be quoted for the same and this shall not be considered for the evaluation of bid.

e) The bidder is advised to take care all information that may be necessary for preparing the bid and entering into the contract. Claims of any kind due to variation or ignorance of site conditions and environmental conditions after award of works will not be entertained.

f) All revisions/changes required as per BHEL/ Project owners, comments/ requirements, site requirement etc. shall be carried out by the bidder.

g) Three hard copies of approved reports/documents/drawings shall be submitted by the bidder. Electronic copies of the CFD model, analysis and report shall be submitted in primary original format as well as in printable non-proprietary formats (e.g. .pdf).

h) Change in recommendation / design after the analysis shall be taken care by bidder without any commercial implication in this contract value.

i) Bidder shall furnish detailed activity schedule, report generation schedule and list of inputs required for successful execution of Wet stack flow model study.

j) The Purchaser/ Customer however also reserve the rights to check the detailed calculations in the event of order and their interpretation shall be final in the event of any conflict.

k) Bidder shall furnish all the documents in English and SI units shall also be followed in the calculations and reports wherever used.

3.00.00 DELIVERY SCHEDULE

Bidder has to carry out the complete activity including physical model, CFD, drawing /documents within 15 weeks from the date of purchase order (PO).

4.00.00 SUGGESTIVE DRAWINGS/ DOCUMENTS SUBMISSION:

Following Basic drawings/documents to be submitted within 2 weeks from PO date.

1. MASTER DRAWING /DOCUMENT LIST. (to be finalized after order)
2. WET STACK STUDY SCHEDULE, PLANNING AND MILESTONES
3. LIST OF CODES AND STANDARDS TO BE FOLLOWED.
4. DETAILED STANDARD PROCEDURE FOR PHYSICAL MODEL & CFD STUDY, DRAWINGS & DOCUMENTS SUBMISSION.
5. DESIGN DRAWINGS OF CONDENSATE COLLECTION AND DRAINAGE SYSTEM
6. THERMAL AND ADIABATIC CONDENSATION CALULATIONS WITH DESIGN BASIS

Following Basic drawings/documents to be submitted within 15 weeks from PO date for BHEL /CUSTOMER approval.

1. TECHNICAL DATASHEETS
2. BILL OF QUANTITIES
3. WET STACK STUDY REPORT WITH RECOMMENDATIONS
4. CFD MODEL, ANALYSIS AND RESULTS

This is not an exhaustive list of drawings/ documents for WET STACK STUDY.

Bidder shall furnish all applicable drawings /documents other than as mentioned above which is/are required for successful execution of condensate collection and drainage system after the absorber outlet to stack outlet.

NOTE:

1. Subsequent revisions of above drgs/docs to be submitted within 7 days of comments received from BHEL/ CUSTOMER. In case there is delay in submission/ resubmission of drawings /documents beyond the drawing/document submission/resubmission schedule as indicated above, that much delay would be attributed to the bidder's account.

2. Drawings submitted shall be complete in all respects with revised drawing submitted incorporating all comments. For any clarification/ discussion required to complete the drawings, the bidder shall depute his personal for the table discussions or discussion through Video conferencing.

5.00.00 DOCUMENTS TO BE SUBMITTED ALONG WITH BID

a) Detailed procedure adopted for the conductance of the study.
b) Wet stack study planning and scheduling.
c) Computer program to be used for the 3D modelling and analysis.
d) Mathematical tools & codes / programs used for the analytical calculations.
e) Technical deviation schedule (if reqd.) (enclosed herein)

Apart from above no other drawings/documents/data sheets etc. are required to be submitted at bid stage and even if furnished shall not be taken cognizance of.

01.02.00 SITE INFORMATION

A. Location & Land Availability:

The proposed unit of 1x250 MW will be installed on the western side of existing 2x60 MW units within the boundary of Rourkela Steel Plant in Sundergarh district of Orissa.
Approximately 80 acres of land is available for construction main plant and accessories. For ash dyke about 70 acres of land is available at a distance of approx 6 KM from plant towards southwest. Presently most of land is filled with blast furnace slag. The main power house building of proposed unit of 1x250 MW will be located on western side of existing 2x60 MW switchyard. The indicative latitude & longitude of the proposed site is as follows:

- Latitude : 22°13'19" N
- Longitude : 84°53'51" E

B. Availability of Infrastructure Facilities

Road

The site is connected by road of NH-23 through a link road from a road junction at Panposh located approx. 10 KM from proposed site.

Railway siding

The nearest railway station Rourkela is situated about one km from the proposed plant site. A new railway siding will be developed for receiving coal from the source.

Airport/Air strip

The nearest airport is at Ranchi which is about 170 KM by rail and 225 KM by road from the proposed site.

Seaport

The nearest seaport is at Paradip (Orissa) which is around 400 Kms from the proposed site.

C. Climatological Data

The following meteorological data shall be taken into account for design of plant and equipment. Site conditions shall be assumed to be as follows for tender purpose.

1. Average elevation above mean sea level : 194m
2. Barometric pressure : 983 mb
3. Ambient temperature
   a. Absolute maximum : 48 ^{0}C
   b. Absolute minimum : 6 ^{0}C
4. Relative humidity (Maximum) : 65 %
5. Annual Average Rainfall : 2656.6 mm
6. Heaviest in 24 Hrs. : 257.8 mm
7. Seismic Zone : Zone-II (As per latest Revision of IS 1893 /2002) Part-I

D. Fuel

a. Primary Fuel, Coal

Coal will be supplied from Ramnagar coal mines which is owned by SAIL. Analysis of Coal and Ash is annexed with this TS. The analysis is indicative. Detail analysis is under process and will be furnished later.

b. Secondary liquid fuel

Light diesel oil (LDO) shall be used for start-up, coal flame stabilization and low load operation of the steam generator. LDO shall be used for cold start up of the steam generator. Source will be from nearest depot of IOC/BPCL.

E. Water System

Brahmani river - Water is proposed to be drawn from an appropriate intake water pumping station at Tarkera near the left bank of the river Brahmani which is about 8 km from the proposed site.
Chemical analysis of Raw Water shall be furnished soon.

1X250 MW ROURKELA PROJECT

Annexure –II

Flue gas Process Data

S no.	Data	Maximum	Minimum
Parameters at the outlet of FGD			
2.	Flow Rate(Nm3/sec)	270	240
3.	Temperature (Celsius)	58	53
4.	Density (Kg/M3)	1.077	1.033
5.	Estimated pressure loss across FGD (mmwc)	130	120

S no.	Data	Maximum	Normal	Minimum
1	estimated moisture content (Vol %) in the flue gas	15	12.5	9.5

The data provided is preliminary as these need to be finalized based on the FGD supplier. Bidders to note that these data shall be finalized after award of the contract.

ANNEXURE III

FIRST ANGLE PRJECTION — ALL DIMENSIONS ARE IN MM

DRAWING NO. PE-DG-427-620-C001

NORTH

ELEVATION (M)	OUTSIDE DIAMETER OF SHELL (mm)	SHELL THK (mm)	OUTSIDE PROFILE OF SHELL (mm)
215.00	12300	400	CYLINDRICAL
210.00	12300	400	
205.00	12300	400	
195.00	12300	400	
185.00	12300	400	
175.00	12300	400	
165.00	12300	400	
160.00	12300	400	
150.00	12300	400	
140.00	12300	400	
130.00	12300	400	
120.00	12300	400	
110.00	12678	422	UNIFORM LINEAR TAPER (II) 45000 / 850
105.00	12867	433	
95.00	13244	456	
85.00	13622	478	
75.00	14000	500	
65.00	14675	525	UNIFORM LINEAR TAPER(I) 40000 / 1350
55.00	15350	550	
45.00	16025	575	
35.00	16700	600	
25.00	17557	639	UNIFORM LINEAR TAPER() 38500 / 1650
19.975	17988	659	
16.125	18.318	674	
12.275	18648	689	
7.000	19100	709	
+2.100	19520	728	
±0.000	19700	736	
−3.500	20000	750	

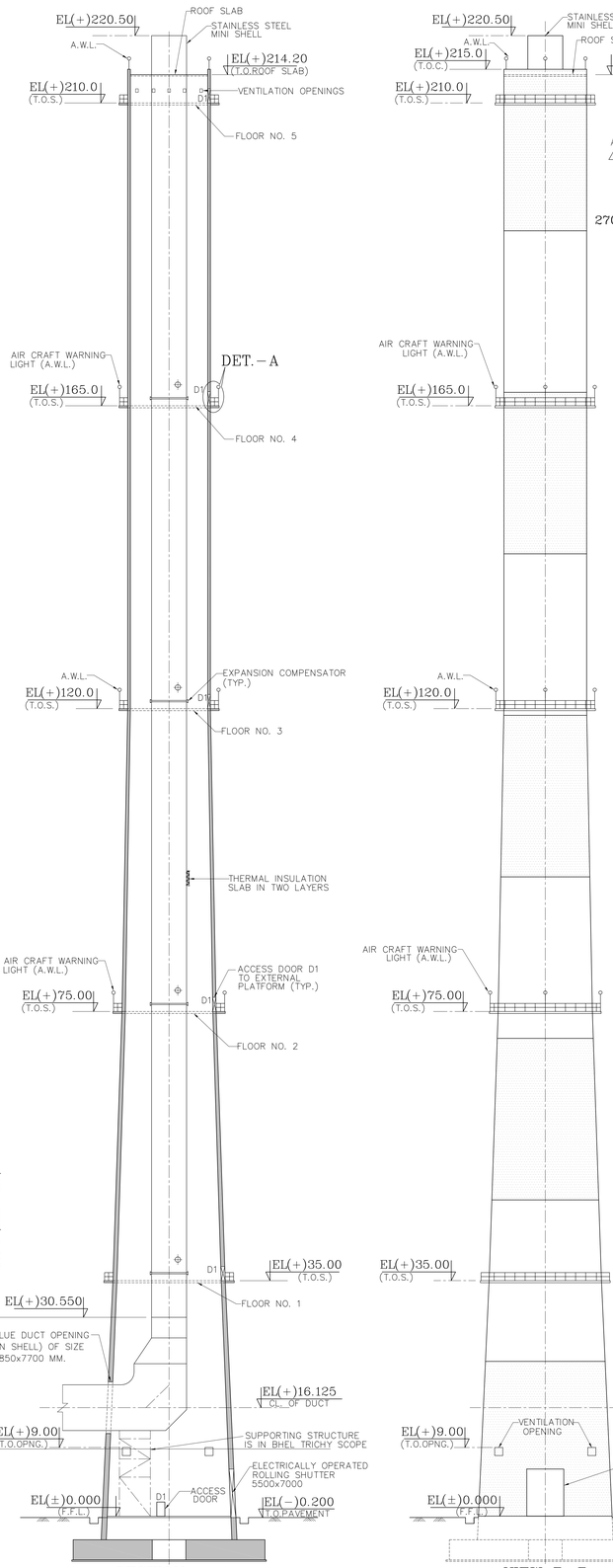

SECTION A–A

VIEW B–B

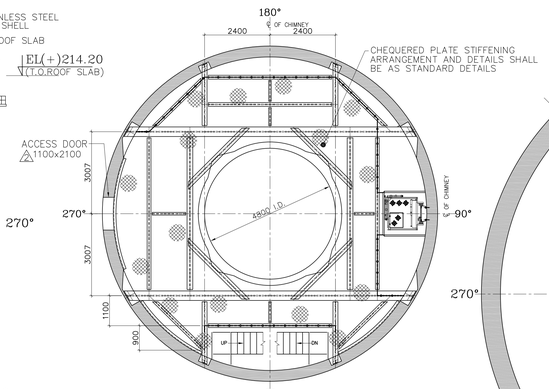

TYP. STRUCTURAL ARRANGEMENT PLAN
PLATFORM AT EL+120.00 +165.00 & +210.00 M. LEVELS

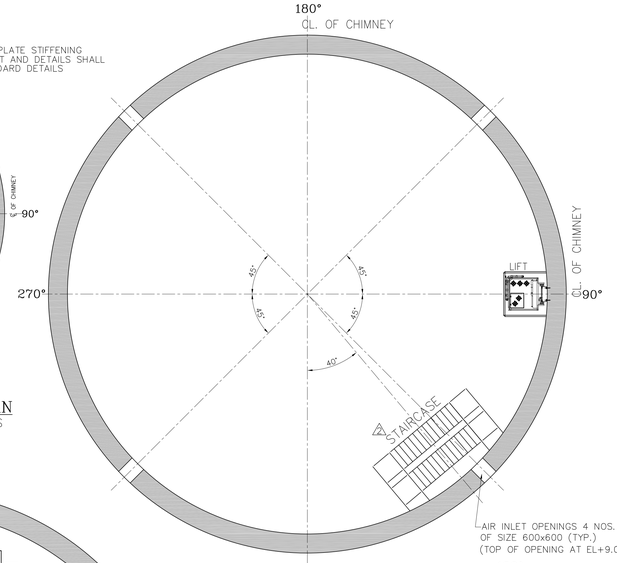

PLAN AT EL(+)9.00M

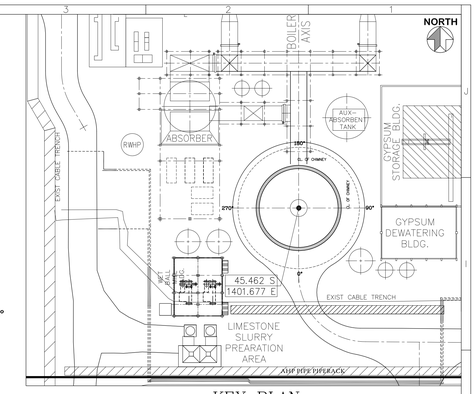

KEY PLAN

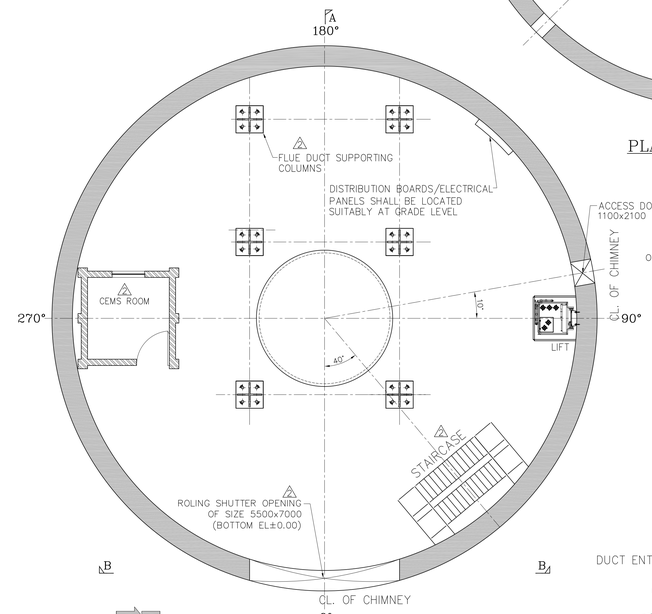

PLAN AT EL(±)0.00M

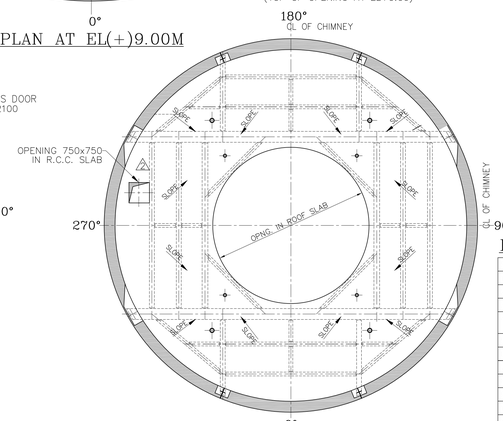

ROOF PLAN
(T.O.C. = EL+214.200 M.)

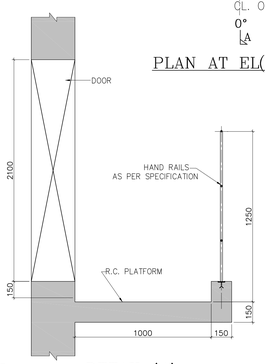

DETAIL 'A'

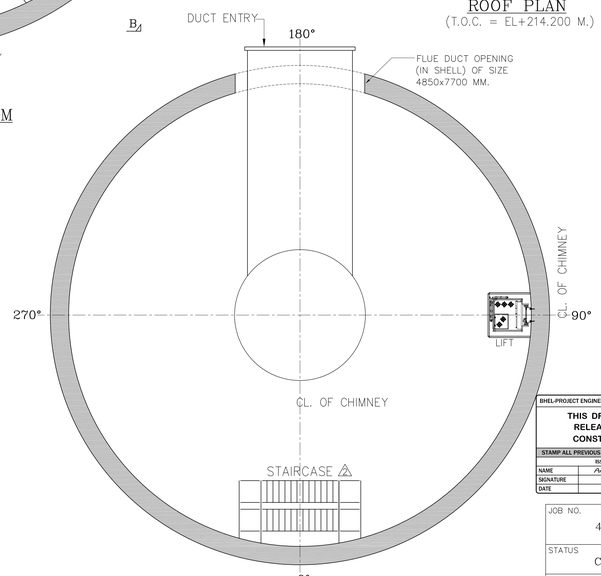

PLAN AT EL(+)16.125M

DRAWING LIST

S.NO.	DRAWING NO.	DRAWING TITLE
1.	PE-DG-427-620-C001	GENERAL ARRANGEMENT
2.	PE-DG-427-620-C002	G.A. OF FOUNDATION
3.	PE-DG-427-620-C003	RCC DETAILS OF FOUNDATION AND STARTER BARS
4.	PE-DG-427-620-C004	SHUTTERING & REINFORCEMENT DETAILS OF CHIMNEY SHELL
5.	PE-DG-427-620-C005	DETAILS OF SHELL OPENNGS
6.	PE-DG-427-620-C006	DETAILS OF EXTRA REINFORCEMENT AROUND SHELL OPENINGS
7.	PE-DG-427-620-C007	DETAILS OF INTERNAL PLATFORMS (SH1)
8.	PE-DG-427-620-C008	DETAILS OF INTERNAL PLATFORMS (SH2)
9.	PE-DG-427-620-C009	DETAILS OF LINER SUPPORT BEAMS
10.	PE-DG-427-620-C010	DETAILS OF LINER RESTRAINT
11.	PE-DG-427-620-C011	DETAIL OF GAS SAMPLING PORTS
12.	PE-DG-427-620-C012	DETAIL OF MANHOLES IN FLUES
13.	PE-DG-427-620-C013	DETAILS OF GRADE SLAB
14.	PE-DG-427-620-C014	G.A. AND R.C.C. DETAILS OF ROOF SLAB
15.	PE-DG-427-620-C015	EXTERNAL PLATFORM DETAILS
16.	PE-DG-427-620-C016	MISCELLANEOUS DETAILS FOR DOORS, ROLLING SHUTER, ROOF HATCH, ETC.
17.	PE-DG-427-620-C017	CHIMNEY LINER DETAILS – CAN TYPE 'SS1' & 'SS2'
18.	PE-DG-427-620-C018	DETAILS OF STEEL STAIRCASE
19.	PE-DG-427-620-C019	LINER GENERAL ARRANGEMENT
20.	PE-DG-427-620-C020	CHIMNEY LINER DETAILS – CAN TYPE 'A'
21.	PE-DG-427-620-C021	CHIMNEY LINER DETAILS – CAN TYPE 'D'
22.	PE-DG-427-620-C022	CHIMNEY LINER DETAILS – CAN TYPE 'F'
23.	PE-DG-427-620-C023	CHIMNEY LINER DETAILS – CAN TYPE 'G'
24.	PE-DG-427-620-C024	CHIMNEY LINER DETAILS – CAN TYPE 'B'
25.	PE-DG-427-620-C025	CHIMNEY LINER DETAILS – CAN TYPE 'E'
26.	PE-DG-427-620-C026	DETAIL OF LINER EXPANSION JOINTS
27.	PE-DG-427-620-C027	FIXING DETAILS OF LINER INSULATION
28.	PE-DG-427-620-C028	CHIMNEY PAINTING

NOTES: –

1. ALL DIMENSIONS ARE IN MILLIMETRES AND LEVELS ARE IN METRES.
2. COMPLIANCE WITH STANDARDS SHALL RELATE TO LATEST PUBLISHED EDITIONS.
3. EL. ±0.00 CORRESPONDS TO R.L. 219.00 M.
4. THE OTHER COMPONENTS OF THE CHIMNEY INCLUDE ROLL UP DOORS, PERSONNEL ACCESS DOORS, HAND RAILS, HOOD HATCH, LINER TEST PORTS, NON METALLIC EXPANSION JOINTS, RAIN WATER DRAINAGE SYSTEM, VENTILATION OPENINGS, ELECTRICAL POWER SUPPLY DISTRIBUTION BOARDS, LIGHTING PANELS, SOCKET OUTLETS, POWER AND CONTROL CABLING, STAIR & PLATFORM LIGHTING, LIGHTNING PROTECTION & GROUNDING SYSTEM ETC. AND SHALL BE PROVIDED AS PER TECHNICAL SPECIFICATIONS.
5. FOR STANDARD NOTES & DETAILS FOR RCC WORKS REFER APPROVED DRG. NO. PE-DG-427-600-C001.
6. FOR STRUCTURAL DETAILS, WELDING, HANDRAILING ETC. REFER APPROVED DRG. NO. PE-DG-427-600-C002.
7. AIRCRAFT WARNING LIGHT (A.W.L.) SHALL BE PROVIDED TO MEET THE REQUIREMENT OF RELEVANT STANDARD STATUTORY BODY.
8. FIXING AND SUPPORTING ARRANGEMENTS OF CHIMNEY ELEVATOR IS IN CHIMNEY ELEVATOR VENDOR SCOPE AND SHALL BE SHOWN IN SEPARATE DRAWING.

BHEL-PROJECT ENGINEERING MANAGEMENT (CIVIL)
THIS DRAWING IS RELEASED FOR CONSTRUCTION
STAMP ALL PREVIOUS REVISION AS SUPERSEDED
ISSUED BY
NAME: Animesh Das
SIGNATURE:
DATE: 09/06/2017

REV.	DATE	ALTD	CHD	APPD
2	09.06.17	SK	MTA	AN
1.	REVISED DUE TO CHANGE IN STAIRCASE LOCATION			
1	25.11.16	SK	MTA	AN
1.	REVISED AS PER MECON'S COMMENTS DATED 24.11.2016			

JOB NO. 427

STATUS: CONTRACT

DISTRIBUTION

PRINT SCALE IN METRE 0 2 4 6 8 10 20 30 40 50

CUSTOMER: NTPC SAIL POWER COMPANY (P) LIMITED (A Joint Venture of NTPC & SAIL)

CONSULTANT: (मेकोन लिमिटेड) MECON LIMITED

PROJECT: ROURKELA POWER PROJECT (PP–II :1 x 250 MW)

BHARAT HEAVY ELECTRICALS LTD
POWER SECTOR
PROJECT ENGINEERING MANAGEMENT
NOIDA (U.P.)

DEPT CODE		NAME	SIGN	DATE
C	DRN	SANJAY	Sd/–	30.09.2016
	DESN	TABREZ	Sd/–	30.09.2016
	CHD	SSB	Sd/–	30.09.2016
	APPD	AN	Sd/–	30.09.2016

TITLE: CHIMNEY
GENERAL ARRANGEMENT

MPL	ELEC	C&I	MSE	MAX	DEPT.	SCALE 1:155
					SIGN	
					DATE	

DRAWING NO. PE–DG–427–620–C001

SHEET 1 OF 1 REV. 2

Apr 24, 2018 – 11:43am

FORMAT SIZE A0

CAD FILE NAME: D:\PROJECTS\ROURKELA\427-620-C001 R2.dwg

COPY RIGHT AND CONFIDENTIAL
BHARAT HEAVY ELECTRICALS LIMITED
The information on this document is the property of BHARAT HEAVY ELECTRICALS LIMITED
It must not be used directly or indirectly in any way detrimental to the interest of the company.

ANNEXURE IV

FIRST ANGLE PRJECTION

ALL DIMENSIONS ARE IN MM

DRAWING NO. PE-DG-427-620-C017

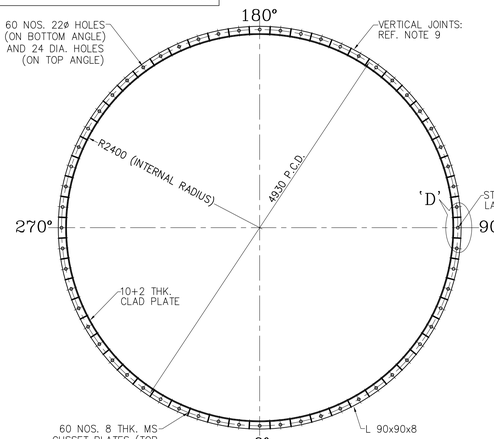

SECTION 1–1

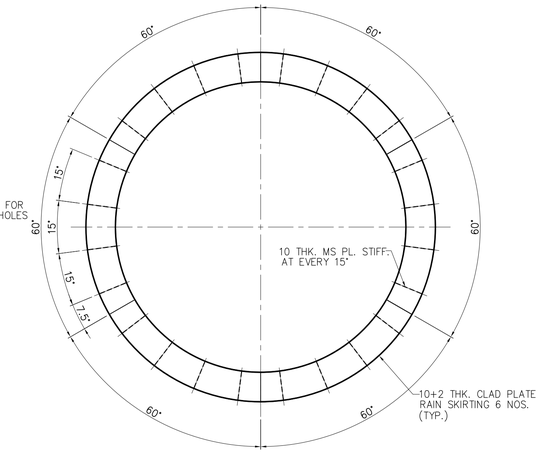

PLAN 2–2
(SHOWING RAIN SKIRTING)

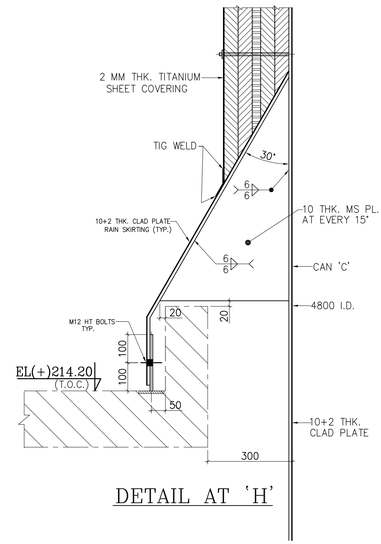

DETAIL AT 'H'

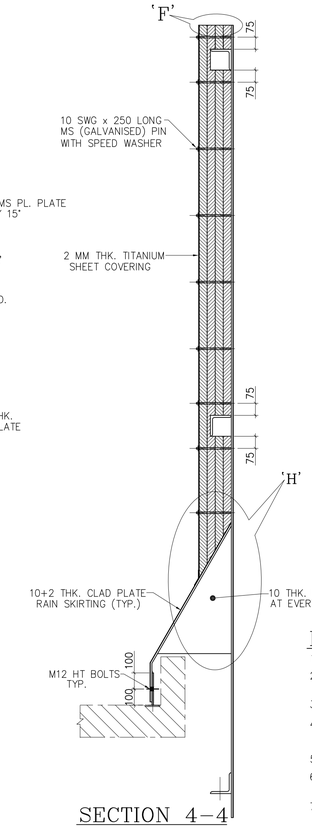

SECTION 4–4

CHIMNEY FLUE LINER MATERIAL HAS BEEN CHANGED FROM MILD STEEL LINER TO TITANIUM CLAD PLATE LINER AS PER CUSTOMER REQUIREMENT VIDE MOM DATED 21.08.2017. EXTRA COMMERCIAL REPERCUSSION FOR THE SAME WITH CUSTOMER TO BE TAKEN CARE BY PS–MARKETING SUITABLY BEFORE EXECUTION.

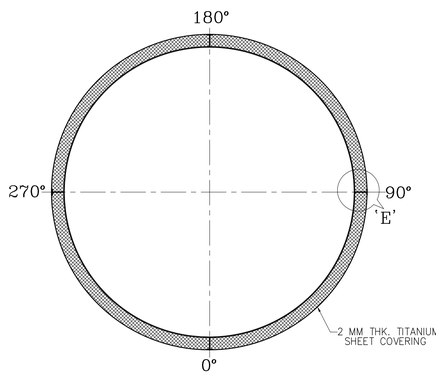

SECTION 3–3
(SHOWING FIXING DETAIL OF COVER PLATE)

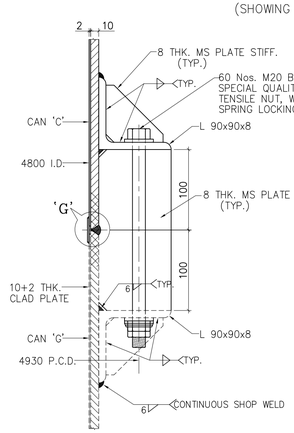

DETAIL AT 'A'
(DETAIL OF JOINT BETWEEN CANS)

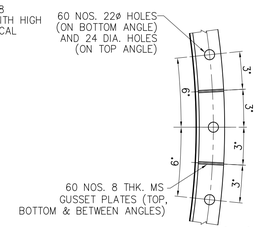

DETAIL AT 'D'

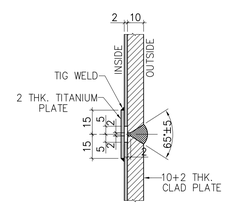

DETAIL 'G'
(TYP. WELDING DETAIL FOR LINER CLAD PLATES)

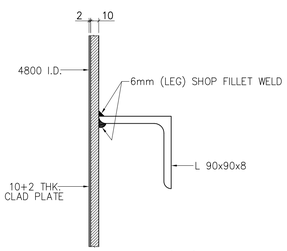

DETAIL AT 'C'

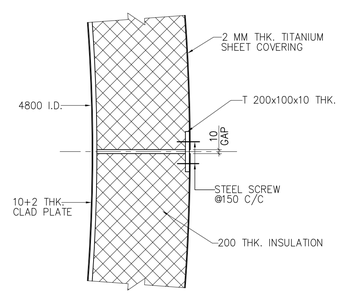

DETAIL AT 'E'

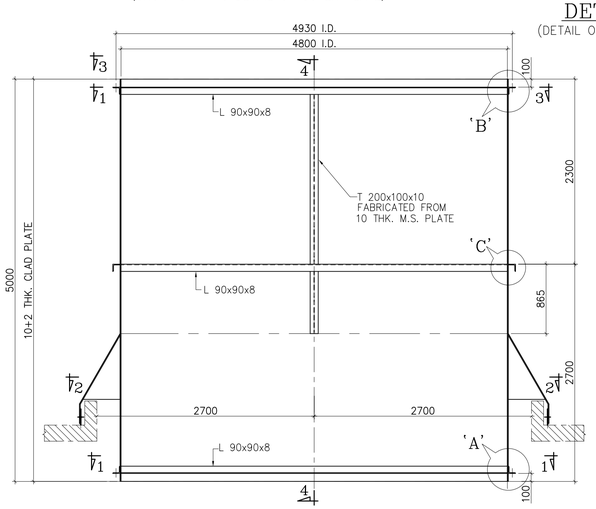

ELEVATION OF CAN TYPE 'C'
TOTAL 1 NO. REQUIRED

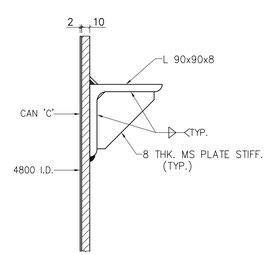

DETAIL AT 'B'

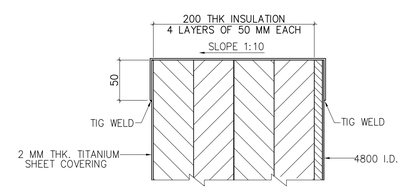

DETAIL AT 'F'

NOTES:–

1. ALL DIMENSIONS ARE IN MILLIMETERS. FIGURED DIMENSIONS SHALL BE FOLLOWED.
2. MILD STEEL PLATES AND ROLLED SECTIONS SHALL CONFORM TO GRADE A OF IS:2062 FOR MATERIALS UPTO 20MM IN THICKNESS.
3. HOT ROLLED SECTIONS SHALL CONFORM TO IS:808 PART I TO IV.
4. TITANIUM CLAD PLATES SHALL CONFORM TO ASTM B898–11. FABRICATION OF TITANIUM CLAD PLATES SHALL BE DONE AS PER SPECIFICATION.
5. SPECIAL QUALITY BOLTS SHALL BE BLACK GRADE OF PROPERTY CLASS 8.8 CONFIRMING IS:1367.
6. WASHERS, NUTS AND HELICAL SPRING LOCKING WASHERS SHALL BE OF QUALITY CLASS NOT LESS THAN THAT OF THE BOLTS.
7. WELDING FOR ALL MS PLATES/MEMBERS SHALL BE DONE WITH LOW HYDROGEN TYPE WELDING CONFORM TO IS:816 AND IS:9595 AND TO THE REQUIREMENT OF THE SPECIFICATION.
8. ALL FILLET AND BUTT WELDS ARE TO BE CONTINUOUS.
9. ALL SHOP WELDS USED TO CONNECT RADIUSED PLATES FORMING FLUE CANS AND OTHER BUTT WELDS, WHERE REQUIRED, SHALL BE FULL PENETRATION BUTT WELD.
10. ANY TEMPORARY STIFFENING STEEL WORK REQUIRED DURING FABRICATION, TRANSPORTATION OR ERECTION PURPOSES SHALL BE DESIGNED AND SUPPLIED BY THE CONTRACTOR, SUCH STEEL WORK SHALL BE REMOVED AND FLUE SURFACES MADE GOOD AFTER ERECTION.
11. TESTING OF WELDS UNLESS NOTED OTHERWISE ON THE DRAWINGS, SHALL BE AS FOLLOWS:
    a) FILLET WELDS:
       i) MACROETCH EXAMINATION ON PRODUCTION COUPONS.
       ii) 100% DYE PENETRATION TEST/MAGNETIC PARTICLE TEST.
    b) BUT WELDS:
       I) 100% DYE PENETRATION TEST AFTER BACK GOUGING.
       ii) 10% (FOR SHOP WELDS) AND 15% (FOR SITE WELDS) RADIOGRAPHY TEST. WHERE RADIOGRAPHY IS NOT POSSIBLE, ULTRASONIC TESTING WILL BE CARRIED OUT.
    c) THE WELD RUN TO BE TESTED. SHALL BE EVENLY DISTRIBUTED OVER THE TOTAL LENGTH OF APPLICABLE WELDS ON EACH CAN.
    d) THE PERCENTAGE OF WELDS TESTED SHALL BE INCREASED AS JUDGED NECESSARY BY THE ENGINEER–IN–CHARGE, BUT TO NOT LESS THAN 20% FOLLOWING IDENTIFICATION OF SIGNIFICANT OF DEFECTIVE WELDS AND ONLY REDUCED TO THE 10/15% NORM AFTER CONSISTENT QUALITY/ INTEGRITY IS RE–ESTABLISHED.
12. WELDING OF TITANIUM PLATE SHALL BE DONE IN ACCORDANCE WITH TECHNICAL SPECIFICATION.
13. THE TERM 'SHOP' WELD REFERS TO ALL WELDS MADE DURING FABRICATION, OF INDIVIDUAL FLUE CANS AT FABRICATION YARD. 'SITE' WELD REFERS TO WELDS MADE DURING FLUE ERECTION FOR JOINING TOGETHER OF CANS WITHIN WIND SHIELD.
14. FOR GENERAL NOTES AND DETAILING OF STEEL STRUCTURAL WORKS REFER DRG. NO. PE–DG–427–600–C002.
15. CHIMNEY FLUE LINER MATERIAL HAS BEEN CHANGED FROM MILD STEEL LINER TO TITANIUM CLAD PLATE LINER AS PER CUSTOMER REQUIREMENT VIDE MOM DATED 21.08.2017. EXTRA COMMERCIAL REPERCUSSION FOR THE SAME WITH CUSTOMER TO BE TAKEN CARE BY PS–MARKETING SUITABLY BEFORE EXECUTION.

BHEL-PROJECT ENGINEERING MANAGEMENT (CIVIL)	
THIS DRAWING IS RELEASED FOR INFORMATION	
STAMP ALL PREVIOUS REVISION AS SUPERSEDED	
ISSUED BY	
NAME	Animesh Das
SIGNATURE	Sd/–
DATE	19/02/2018

REV.	DATE	ALTD	CHD	APPD
1	19.02.18	SK	MTA	AN

1. GENERALLY REVISED
2. MS PLATE IS REPLACED WITH TITANIUM CLAD PLATE.

JOB NO. 427

STATUS CONTRACT

DISTRIBUTION

PRINT SCALE IN METRE 0 2 4 6 8 10 20 30 40 50

CUSTOMER
NTPC SAIL POWER COMPANY (P) LIMITED
(A Joint Venture of NTPC & SAIL)

CONSULTANT
मेकॉन लिमिटेड
MECON LIMITED

ROURKELA POWER PROJECT
(PP–II :1 x 250 MW)

BHARAT HEAVY ELECTRICALS LTD
POWER SECTOR
PROJECT ENGINEERING MANAGEMENT
NOIDA (U.P.)

DEPT CODE		NAME	SIGN	DATE
C	DRN	SANJAY	Sd/–	15.03.2017
	DESN	TABREZ	Sd/–	15.03.2017
	CHD	SSB	Sd/–	15.03.2017
	APPD	AN	Sd/–	15.03.2017

TITLE
CHIMNEY
LINER DETAILS – CAN TYPE 'C'

MPL	ELEC	C&I	MSE	MAX	DEPT.	SCALE 1:70
					SIGN	
					DATE	

DRAWING NO. PE–DG–427–620–C017

SHEET 1 OF 1 REV. 1

Feb 23, 2018 – 12:17pm

FORMAT SIZE A1

COPY RIGHT AND CONFIDENTIAL
The information on this document is the property of BHARAT HEAVY ELECTRICALS LIMITED
It must not be used directly or indirectly in any way detrimental to the interest of the company.

CAD FILE NAME: D:\PROJECTS\RDJURKELA\427-620-C017 R1.dwg

ANNEXURE V

FIRST ANGLE PRJECTION

ALL DIMENSIONS ARE IN MM

DRAWING NO. PE-DG-427-620-C026

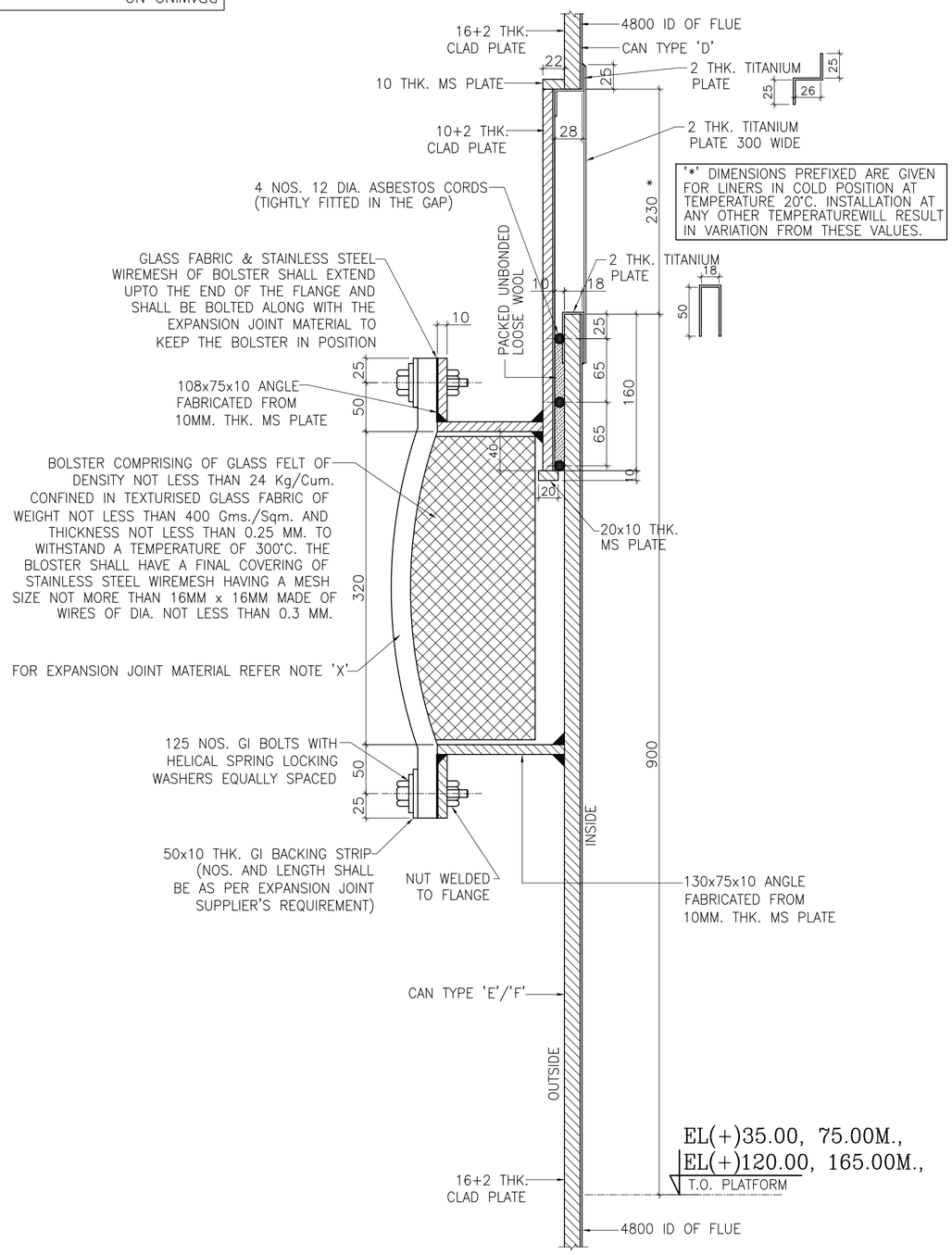

EXPANSION JOINT DETAILS
(AT 4 LEVELS)

NOTES 'X'

1. THE EXPANSION JOINT SUPPLIER SHALL FULLY SATISFY HIMSELF ABOUT THE SATISFACTORY PERFORMANCE OF THE JOINT MATERIAL AS PER ACTUAL SITE CONDITION AND FLUE GAS PARAMETERS. THE SUPPLIER SHALL GET APPROVAL FOR SAME BEFORE INSTALLATION.
2. THE SUPPLIER SHALL GET APPROVAL FOR EXPANSION JOINT MATERIAL BEFORE INSTALLATION.
3. THE SUPPLIER SHALL ALSO PROVIDE AN INSTALLATION DISMANTLING AND MAINTENANCE USER HANDBOOK FOR THE EXPANSION COMPENSATOR

NOTES:

1. ALL DIMENSIONS ARE IN MILLIMETRES & ELEVATIONS ARE IN METRES.
2. FASTENERS SHALL CONFIRM TO IS:1363.
3. FOR LAYOUT OF LINER CANS REFER DRG. NO. PE-DG-427-620-C019.
4. THE VARIOUS LAYERS OF THE EXPANSION COMPENSATOR SHALL BE MANUFACTURED TO THE SPECIFIED THICKNESS AND UNIT WEIGHTS WITHIN A MANUFACTURING TOLERANCE OF 5% OF THE ABSOLUTE SPECIFIED VALUES.
5. THE MATERIAL SHALL BE TRANSPORTED, HANDLED, STORED, ETC. STRICTLY IN ACCORDANCE WITH THE SUPPLIER'S RECOMMENDATIONS.

BHEL-PROJECT ENGINEERING MANAGEMENT (CIVIL)	
THIS DRAWING IS RELEASED FOR INFORMATION	
STAMP ALL PREVIOUS REVISION AS SUPERSEDED	
ISSUED BY	
NAME	Animesh Das
SIGNATURE	Sd/-
DATE	19/02/2018

REV.	DATE	ALTD	CHD	APPD	REV.	DATE	ALTD	CHD	APPD	REV.	DATE	ALTD	CHD	APPD	REV.	DATE	ALTD	CHD	APPD
										3	19.02.18	SK	MTA	AN	2	31.07.17	SK	MTA	AN
										1. GENERALLY REVISED 2. MS PLATE IS REPLACED WITH TITANIUM CLAD PLATE.					1. NO CHANGES. COMPLIANCE REPORT ENCLOSED.				

REV.	DATE	ALTD	CHD	APPD
1	19.06.17	SK	MTA	AN
1. REVISED AS PER MECON's COMMENTS 2. REVISED AS MKD. △1				

JOB NO. 427

STATUS CONTRACT

DISTRIBUTION

PRINT SCALE IN METRE 0 2 4 6 8 10 20 30 40 50

CUSTOMER: NTPC SAIL POWER COMPANY (P) LIMITED (A Joint Venture of NTPC & SAIL)

CONSULTANT: (मेकॉन लिमिटेड) MECON LIMITED

ROURKELA POWER PROJECT (PP-II :1 x 250 MW)

ENGG/SUB CONTRACTOR: BHARAT HEAVY ELECTRICALS LTD, POWER SECTOR, PROJECT ENGINEERING MANAGEMENT, NOIDA (U.P.)

DEPT CODE		NAME	SIGN	DATE
C	DRN	SANJAY KR.	Sd/-	15.03.2017
	DESN	TABREZ	Sd/-	15.03.2017
	CHD	SSB	Sd/-	15.03.2017
	APPD	AN	Sd/-	15.03.2017

TITLE: **CHIMNEY**
DETAIL OF LINER EXPANSION JOINTS

CIVIL	ELEC	C&I	MSE	MAX	DEPT.	SCALE 1:100
					SIGN	
					DATE	

DRAWING NO. PE-DG-427-620-C026

SHEET 1 OF 1 REV. 3

Feb 19, 2018 - 4:01pm

FORMAT SIZE A2

COPY RIGHT AND CONFIDENTIAL
The information on this document is the property of BHARAT HEAVY ELECTRICALS LIMITED
it must not be used directly or indirectly in any way deterimental to the interest of the company.

CAD FILE NAME: D:\PROJECTS\ROURKELA\427-620-C026 R3.dwg

Fold-1 Fold-2

ANNEXURE -VI

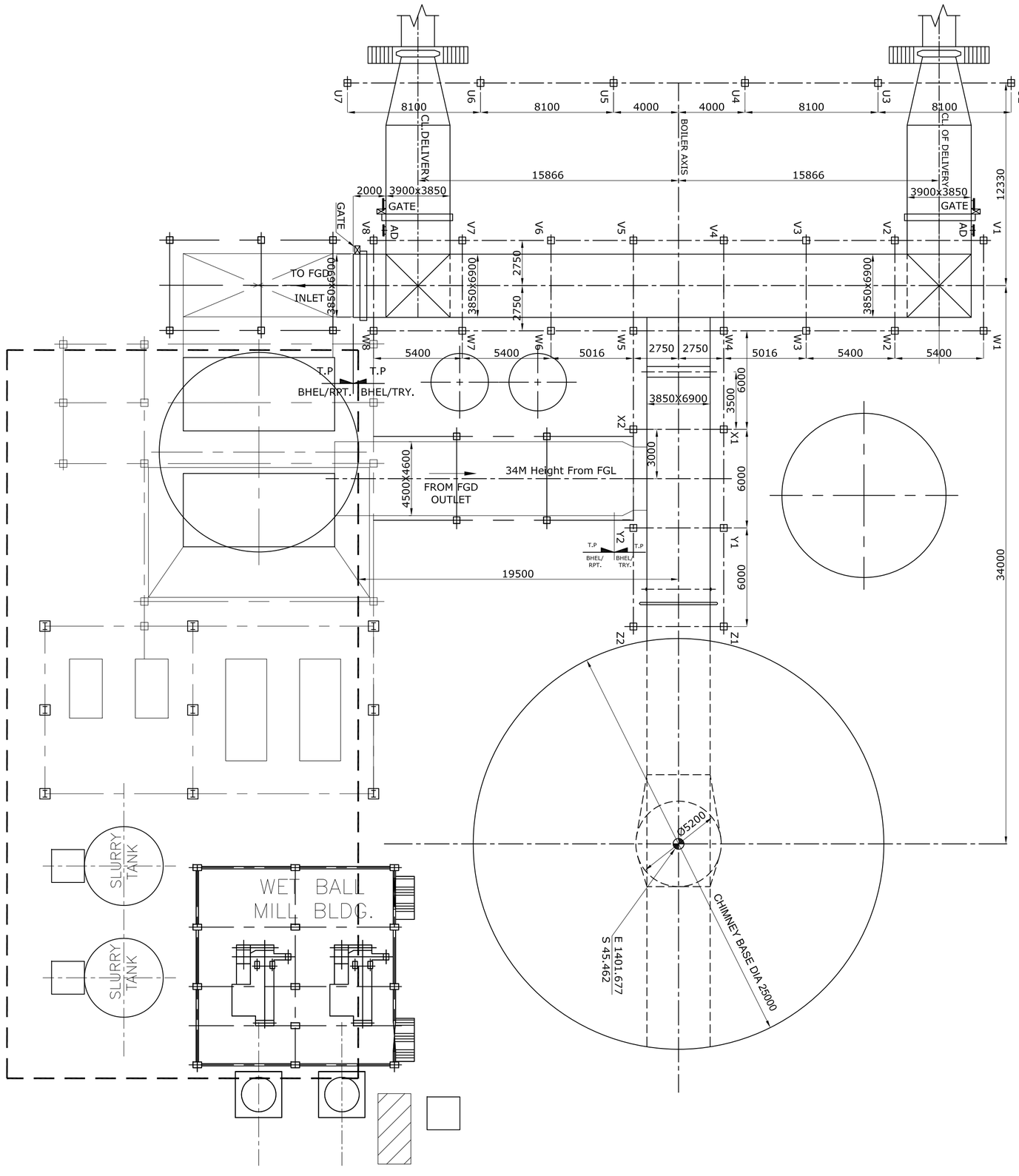

NTPC-SAIL POWER COMPANY LTD.	
PROJECT : ROURKELA PP–II EXPANSION PROJECT (1x250MW)	
TITLE : PROPOSED LAYOUT FOR FGD	
N.T.S. / SCALE	SAJID KHAN / DRN BY / DATE / CHKD BY / DATE / APPD BY / DATE
DRG. NO.	SHEET 1 OF 1 / REV 0 / SIZE A3

ANNEXURE VII: WIND ROSE DIAGRAM

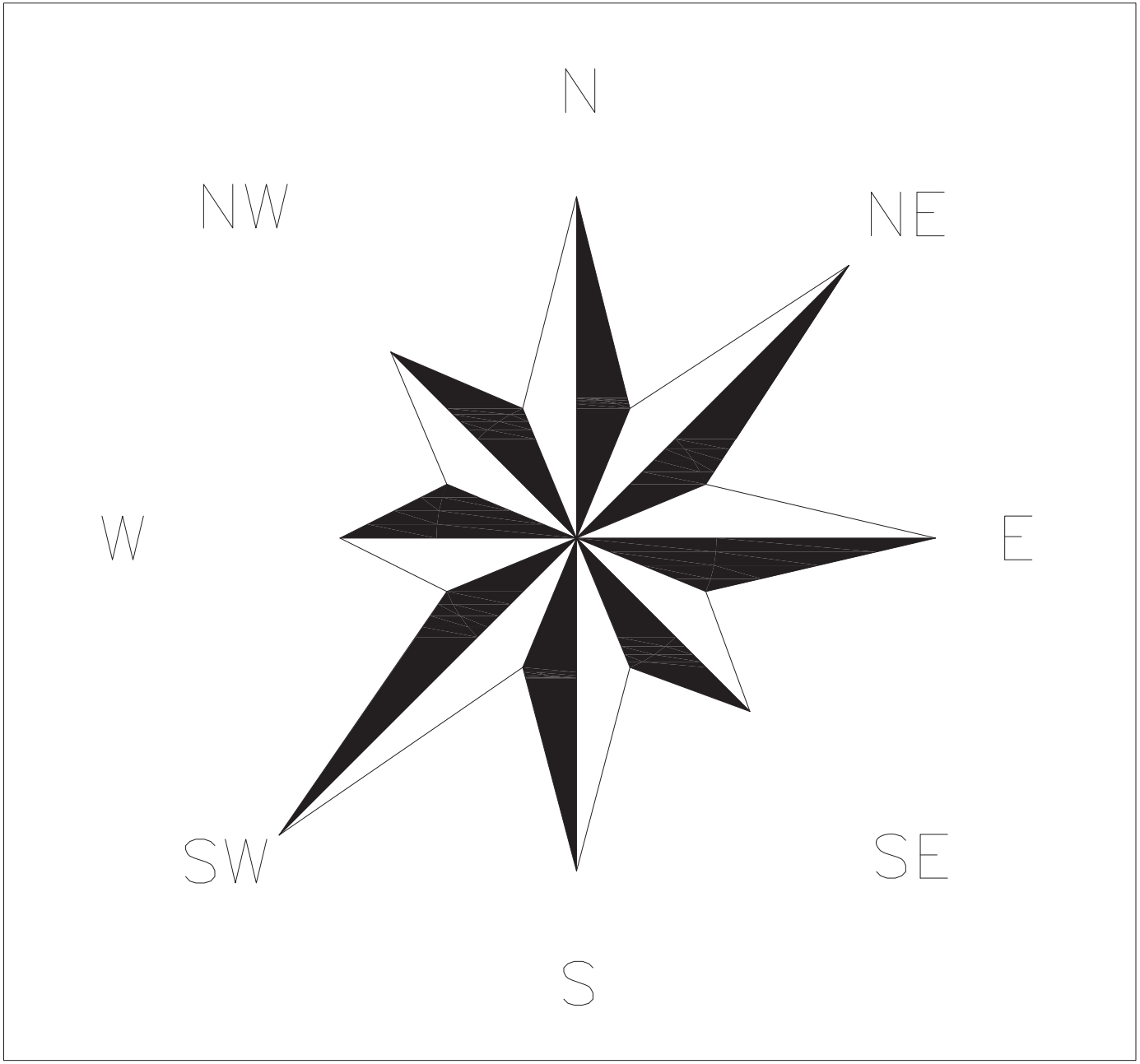

FIRST ANGLE PRJECTION

ALL DIMENSIONS ARE IN MM

DRAWING NO. PE-DG-427-620-C027

ANNEXURE - VIII

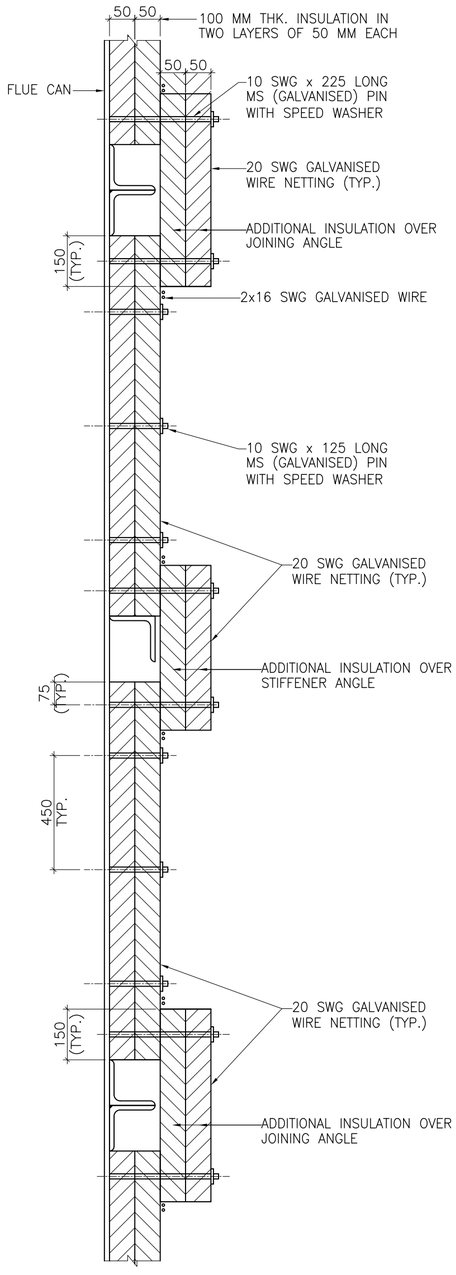

SECTION A–A

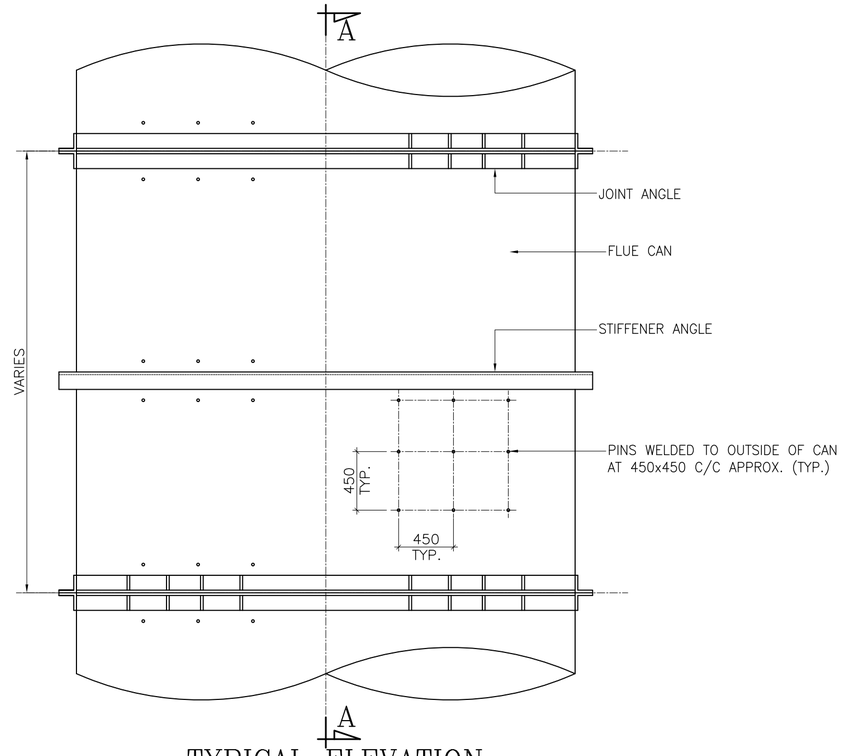

TYPICAL ELEVATION

NOTES:

1. ALL DIMENSIONS ARE IN MILLIMETRES AND LEVELS ARE IN METRES.
2. FLUE INSULATION SHALL BE OF RESIN BONDED ROCK WOOL SLABS OF DENSITY 100 Kg/Cum OR RESIN BONDED GLASS WOOL OF DENSITY 64 Kg/Cum. MAXIMUM THERMAL CONDUCTIVITY SHALL BE 0.52 mw/°c/sqm CONFORMING TO IS: 819 AND IS: 8183.
3. FIXING OF ALL INSULATION TO ALL THE CANS SHALL AS DEFINED IN SPECIFICATION AND AS SHOWN IN RELEVANT DRAWINGS.
4. INSULATION SHALL BE KEPT DRY ON SITE AND IN PARTICULAR SHALL REMAIN DRY AT ALL TIMES IN PLACE ON FLUE CANS.

BHEL-PROJECT ENGINEERING MANAGEMENT (CIVIL)	
THIS DRAWING IS RELEASED FOR CONSTRUCTION	
STAMP ALL PREVIOUS REVISION AS SUPERSEDED	
ISSUED BY	
NAME	Animesh Das
SIGNATURE	
DATE	07/06/2017

JOB NO. 427	CUSTOMER	NTPC SAIL POWER COMPANY (P) LIMITED (A Joint Venture of NTPC & SAIL)
STATUS CONTRACT	CONSULTANT	(मेकॉन लिमिटेड) MECON LIMITED
DISTRIBUTION	ROURKELA POWER PROJECT (PP–II :1 x 250 MW)	
PRINT SCALE IN METRE 0 2 4 6 8 10 20 30 40 50	ENGG/SUB CONTRACTOR	BHARAT HEAVY ELECTRICALS LTD, POWER SECTOR, PROJECT ENGINEERING MANAGEMENT, NOIDA (U.P.)

DEPT CODE		NAME	SIGN	DATE
C	DRN	SANJAY KR.	Sd/–	30.03.2017
	DESN	TABREZ	Sd/–	30.03.2017
	CHD	SSB	Sd/–	30.03.2017
	APPD	AN	Sd/–	30.03.2017

REV.	DATE	ALTD	CHD	APPD	REV.	DATE	ALTD	CHD	APPD	REV.	DATE	ALTD	CHD	APPD	REV.	DATE	ALTD	CHD	APPD	REV.	DATE	ALTD	CHD	APPD

TITLE

CHIMNEY

FIXING DETAIL OF LINER INSULATION

	CIVIL	ELEC	C&I	MSE	MAX	DEPT.	SCALE 1:100
						SIGN	
						DATE	

DRAWING NO. PE–DG–427–620–C027

SHEET 1 OF 1 REV. 0

Apr 24, 2018 – 11:22am

FORMAT SIZE A2

COPY RIGHT AND CONFIDENTIAL
The information on this document is the property of BHARAT HEAVY ELECTRICALS LIMITED
it must not be used directly or indirectly in any way deterimental to the interest of the company.

CAD FILE NAME: D:\PROJECTS\ROURKELA\427-620-C027 R0 RFC.dwg

FIRST ANGLE PRJECTION

ALL DIMENSIONS ARE IN MM

ANNEXURE - IX

DRAWING NO. PE-DG-427-620-C011

NORTH

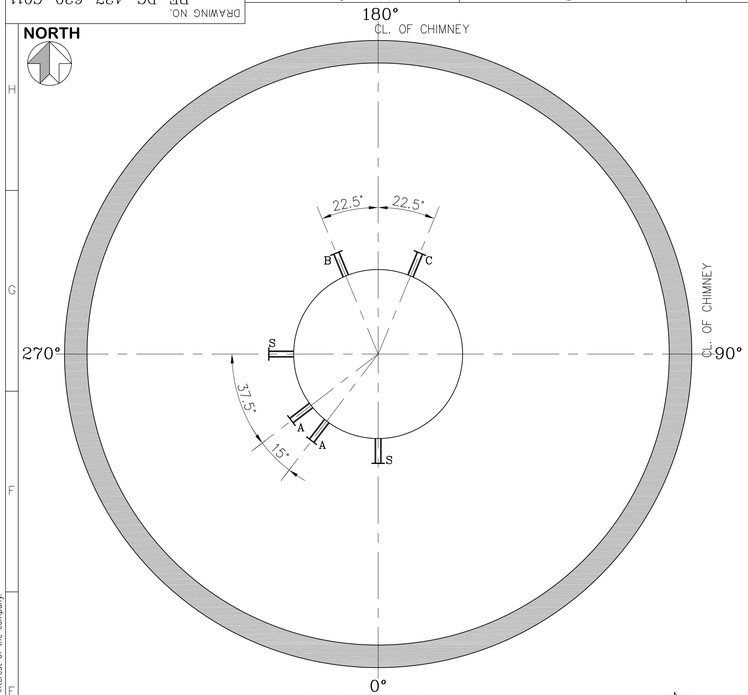

KEY PLAN SHOWING
GAS SAMPLING PORTS
(AT EL+35.00 M. PLATFORM LEVEL)

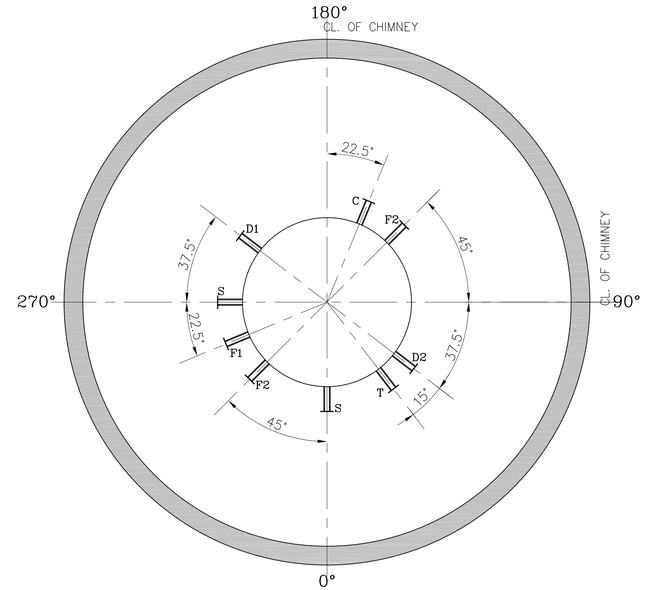

KEY PLAN SHOWING
GAS SAMPLING PORTS
(AT EL+75.00 M. PLATFORM LEVEL)

TABLE –1

SAMPLING PORT	LEVEL	SIZE	FLANGE	P.C.D.
'A' (SOX/NOX/CO2 ANALYZER PORTS)	36.00 M.	4" NB MILD STEEL PIPE (OD 114.3mm)	230.0	190.5
'B' (MERCURY ANALYZER PORTS)	36.00 M.	3½" NB MILD STEEL PIPE (OD 101.6mm)	215.0	177.8
'C' (MSP PORTS)	36.00 M.	3½" NB MILD STEEL PIPE (OD 101.6mm)	215.0	177.8
'S' (SPARE PORTS)	36.00 M. 76.00 M.	3½" NB MILD STEEL PIPE (OD 101.6mm)	215.0	177.8
'D1' (OPACITY MONITOR TRANSMITTER PORT)	76.00 M.	3" NB MILD STEEL PIPE (OD 88.9mm)	190.0	152.4
'D2' (OPACITY MONITOR RECIVER PORT)	76.00 M.	3" NB MILD STEEL PIPE (OD 88.9mm)	190.0	152.4
'T' (TEMPERATURE SENSOR PORTS FOR OPACITY MONITOR)	75.50 M.	1" NB MILD STEEL PIPE (OD 33.4mm)	110.0	79.40
'F1' (FLOW METER PORTS TYPE 1)	75.50 M. 76.50 M.	3" NB MILD STEEL PIPE (OD 88.9mm)	190.0	152.4
'F2' (FLOW METER PORTS TYPE 2)	75.50 M. 78.90 M.	4" NB MILD STEEL PIPE (OD 114.3mm)	230.0	190.5

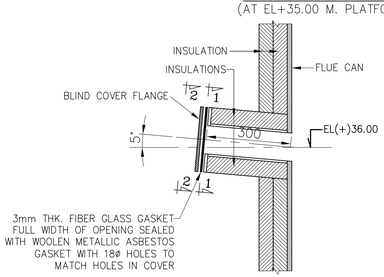

TYPICAL DETAIL OF
SAMPLING PORT
(FOR PORTS MKD. 'A')

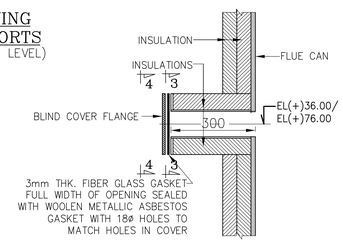

TYPICAL DETAIL OF
SAMPLING PORT
(FOR PORTS MKD. 'B', 'C' & 'S')

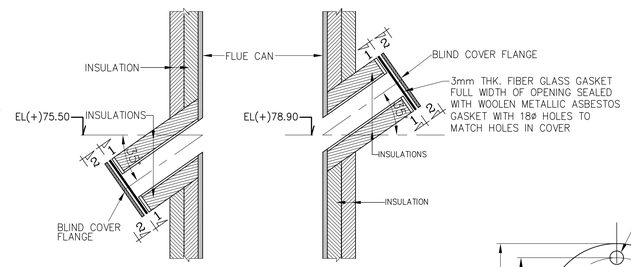

TYPICAL DETAIL OF
SAMPLING PORT
(FOR PORTS MKD. 'F2')

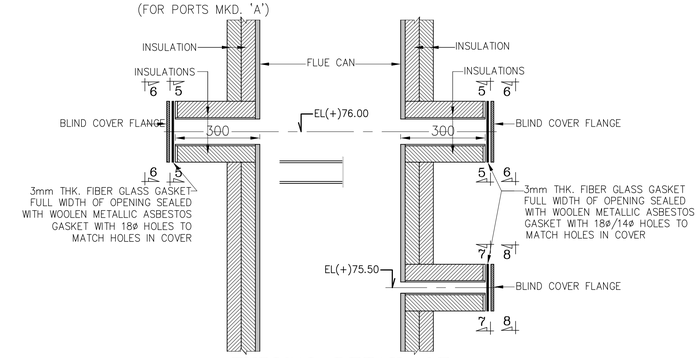

TYPICAL DETAIL OF
SAMPLING PORT
(FOR PORTS MKD. 'D1' & 'D2')

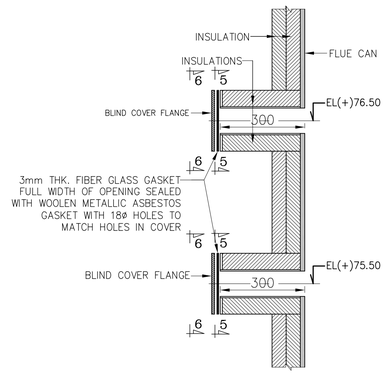

TYPICAL DETAIL OF
SAMPLING PORT
(FOR PORTS MKD. 'F1')

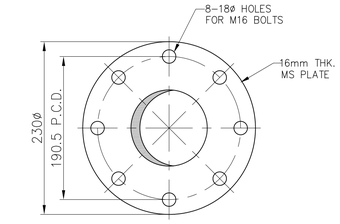

VIEW 1–1

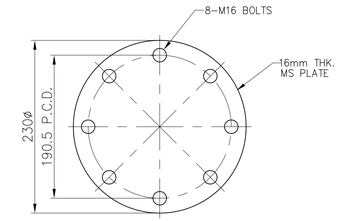

VIEW 2–2

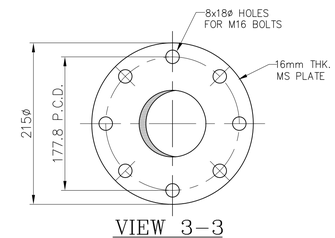

VIEW 3–3

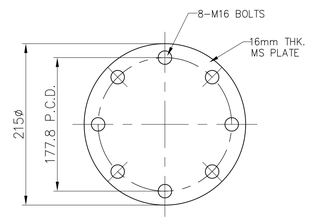

VIEW 4–4

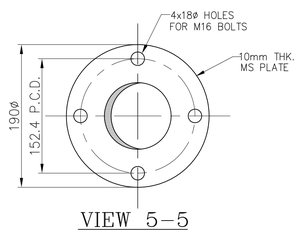

VIEW 5–5

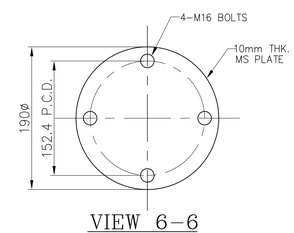

VIEW 6–6

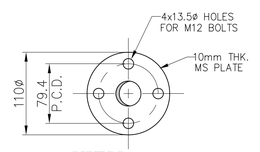

VIEW 7–7

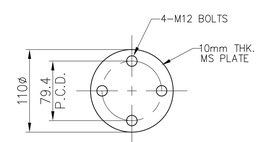

VIEW 8–8

NOTES:

1. ALL DIMENSIONS ARE IN MILLIMETRES AND LEVELS ARE IN METRES.
2. FLUE INSULATION SHALL BE OF RESIN BONDED ROCK WOOL SLABS OF DENSITY 100 Kg/Cum. MAXIMUM THERMAL CONDUCTIVITY SHALL BE 0.52 mw/°c/sqm CONFORMING TO IS: 8183.
3. FIXING OF ALL INSULATION TO ALL THE CANS SHALL AS DEFINED IN SPECIFICATION AND AS SHOWN IN RELEVANT DRAWINGS.
4. INSULATION SHALL BE KEPY DRY ON SITE AND IN PARTICULAR SHALL REMAIN DRY AT ALL TIMES IN PLACE ON FLUE CANS.

BHEL-PROJECT ENGINEERING MANAGEMENT (CIVIL)

THIS DRAWING IS RELEASED FOR CONSTRUCTION

STAMP ALL PREVIOUS REVISION AS SUPERSEDED

ISSUED BY	
NAME	Animesh Das
SIGNATURE	
DATE	17/07/2017

REV.	DATE	ALTD	CHD	APPD
1	19.06.17	SK	MTA	AN

1 RESUBMITTED WITH NO CHANGES IN DRAWING.

JOB NO. 427

STATUS CONTRACT

DISTRIBUTION

PRINT SCALE IN METRE 0 2 4 6 8 10 20 30 40 50

CUSTOMER
NTPC SAIL POWER COMPANY (P) LIMITED
(A Joint Venture of NTPC & SAIL)

CONSULTANT
मेकॉन लिमिटेड
MECON LIMITED

ROURKELA POWER PROJECT
(PP–II :1 x 250 MW)

BHARAT HEAVY ELECTRICALS LTD
POWER SECTOR
PROJECT ENGINEERING MANAGEMENT
NOIDA (U.P.)

DEPT CODE		NAME	SIGN	DATE
C	DRN	SANJAY	Sd/–	22.05.2017
	DESN	TABREZ	Sd/–	22.05.2017
	CHD	AD	Sd/–	22.05.2017
	APPD	AN	Sd/–	22.05.2017

TITLE
CHIMNEY
DETAIL OF GAS SAMPLING PORTS

MPL	ELEC	C&I	MSE	MAX	DEPT.	SCALE 1:75
					SIGN	
					DATE	

DRAWING NO. PE–DG–427–620–C011

SHEET 1 OF 1 REV. 1

Apr 24, 2018 – 11:44am

FORMAT SIZE A1

CAD FILE NAME: D:\PROJECTS\ROURKELA\427-620-C011 R1 RFC.dwg

COPY RIGHT AND CONFIDENTIAL
BHARAT HEAVY ELECTRICALS LIMITED
The information on this document is the property of BHEL
It must not be used directly or indirectly in any way detrimental to the interest of the company.