2X800MW NTPC KARIMNAGAR STPP, TELANGANA

TECHNICAL SPECIFICATION
FOR

CONDENSATE FLOW MODEL STUDY FOR WET STACKS

SPECIFICATION No: **PE–TS –424-100–N001 (REV 00)**

BHARAT HEAVY ELECTRICALS LIMITED
POWER SECTOR
PROJECT ENGINEERING MANAGEMENT
PPEI, NOIDA, INDIA

CONTENTS

1.00.00 INTENT OF ENQUIRY/ SPECIFICATION

2.00.00 SCOPE OF WORK

3.00.00 DELIVERY SCHEDULE

4.00.00 SUGGESTIVE DRAWINGS/ DOCUMENTS SUBMISSION

5.00.00 DOCUMENTS TO BE SUBMITTED WITH BID

ENCLOSURES:

Annexure-I: Project information

Annexure-II: Flue gas process parameters

Annexure-III: GA of chimney

Annexure-IV: Minishell

Annexure-V: FGD Layout

Annexure-VI: Expansion Compensator

Annexure-VII: Wind rose diagram

1.00.00 INTENT OF SPECIFICATION:

The intent of this enquiry/ specification is to carry out the Wet stack flow model study of 2x800 MW NTPC Karimnagar project for complete duct system from absorber outlet to the top of the stack, design and optimization of gas flow and liquid collection system to mitigate stack liquid discharge (SLD) and shell corrosion, Preparation of final report and recommendations, preparation of drawings/ documents for execution of collection system, obtaining approval on documents from BHEL/ Customer/ customer's consultant, Preparation of BOQ, preparation of bought out item specification, procurement assistance for specialized items, site visit as specified later in the specification & as necessary for completeness in all respects and for efficient & trouble free operation of chimney and liquid collection system for project.

2.00.00 SCOPE OF WORK:

The scope of study shall be from mist eliminator outlet to top of the stack. Wet stack model study shall consist of the following:

- Condensation calculations & design of condensate collection system
- A scale physical flow model for liquid collector system (LCS) design.
- A computational flow model for plume downwash analysis.
- A physical or computational flow model for CEMS elevation flow performance.
- Design of optimum choke geometry, if required.
- Review & Approval of liquid collector system construction drawings.
- Site inspection & supervision for 7 days to verify and evaluate LCS system performance prior to commissioning.

Wet stack study shall be performed for each unit with a wet stack installation where there does not exist an identical or mirror image installation. The objective of the wet stack study shall be to maximize liquid collection downstream of the mist eliminators and to preclude ground level rainout from the stack by recommending experimentally developed, tested, and optimized liquid collection devices and drainage systems to return collected liquid to the absorber with minimum re-entrainment.

The following codes and standard shall be followed for the conductance of this study:

- Revised wet stack design guidelines, 2012 by EPRI
- ACI 307 (American concrete institute code requirement for RC chimney)
- EPRI report CS-2520 Entrainment in wet stack 1982
- EPRI report TR-109380 guidelines for fluid dynamic design of power plant ducts, 1998
- EPRI report GS-6984 FGD mist eliminator system design and specification guide
- CICIND, ICAC, US EPA and other international and other latest codes and standards.

2.01.00 Design methods and tools

The study shall be carried out by design methods and tools:

- Preliminary design review based on experience
- Laboratory flow modeling -3-Dimentional
- Computer flow modelling -3-Dimentional
- Computer program calculations

2.01.01 Preliminary design review based on experience

Based on the inputs furnished as per enclosed Annexure with this specification for the duct work and stack, preliminary design review need to be carried out to estimate the liquid collection requirements, predict the condensation rate in the duct & stack and perform the preliminary system design.

2.01.02 Condensation calculations using analytical / numerical tools

Gas flow study should include the calculation for the condensate formed and / or condensate carry over. The condensate flow study should include condensate quantity formed due to:

i) Thermal condensation on the liners
ii) Adiabatic condensation
iii) Turbulence of flue gas flow near entry of the stack
iv) At the outlet duct from absorber mist eliminator outlet
v) Contribution from mist eliminator carryover in case of normal wash cycle or mist eliminator become fouled with time.

Detailed calculations along with the design basis for condensation rate in the duct from absorber outlet to the top of the chimney for the worst operating case, minimum boiler load and design conditions shall be furnished as a function of ambient air temperature, wind velocity and liner design variables in the report with an accuracy of ±10%.

2.01.03 Design of Condensate collection & drainage system

(i) Size of gutter(s) along with inner surface of Chimney flue-can and inlet duct from absorber outlet to inlet of chimney flue-can, such that condensate is collected efficiently and drained off with a drainage system till its terminal point at ground outside the duct & Chimney shell.

(ii) As the gutter shall be made of Titanium/C-276 as compatible with inner surface, suitable shape, size and thickness is to be recommended so that gas flow occurs efficiently.

(iii) The size, thickness, location and material of condensate drainage pipe shall be included in recommendation. It is envisaged that pipe from gutter to outside of Chimney liner shall be of Titanium/C-276 and thereafter the drainage pipe shall be of FRP up to the collection pit. Routing of the drain pipes shall be provided by the bidder.

After the flow-model study is performed, accordingly design of liquid-collection devices for the full scale Wet Stack is to be carried out and detailed drawings, design basis and calculations shall be submitted.

2.01.04 Computational 3-D fluid-dynamic-model study (CFD Analysis)

Performance of a computational 3-D fluid-dynamic-model study of the minimum upper one third of the stack liner and shell to evaluate downwash of the wet plume. CFD model shall include the surrounding structure which are significant to wind/ plume flow patterns preferably minishell, external handrails and floor at the stack outlet.

A computational model of the stack shell and liner(s) shall be constructed for the plume downwash study. The plume downwash study shall include analysis of the local wind/temperature data to identify the occurrence of critical wind and temperature conditions. The plume downwash study shall identify the stack velocity and ambient wind conditions that produce downwash and the maximum extent of expected downwash throughout the year for shell corrosion protection. For sites where ambient temperatures reach freezing, a "winter" period shall be simulated to evaluate icing potential on the stack.

Depending on the results of the downwash study, there may be a need to develop an optimum choke geometry, if required, to minimize the plume downwash & liquid impingement of the shell. This includes evaluation of liquid collectors and drains to prevent re-entrainment and discharge of large droplets from the top of the choke.

Bidder to use the latest software for the CFD modelling and shall submit the model along with results in form of contours and vector plots of velocity, pressure, concentration and temperature at various test locations and summarized in tabular format. The model shall be tested with various simulated operating, minimum and

design flow conditions, maximum wind speed, wind orientations, to evaluate the potential of the downwash.

The Bidder shall review Minishell details (Liner extension above roof) enclosed as an Annexure and confirm the liner-extension design with their recommendation.

In case of the excessive downwash or reversed flow at stack exit or liquid exiting the stack liner and forming/depositing on the top of the concrete shell, bidder to provide the corrective actions, design modifications and evaluate the modified geometry.

2.02.00 Physical model of the system

An experimental gas-flow-model study to design and develop collectors for the duct and stack downstream of the mist eliminator that will collect and drain liquid from the walls to prevent re-entrainment.

Laboratory Physical model study shall include the following details for wet stack design:

i. Estimation of the total liquid load on the liner surface as a result of thermal and adiabatic condensation. This estimate shall be based on the liner and shell geometry, thickness, materials of construction and the flue gas–flow rate and properties over a range of expected plant-operating conditions and worst-case ambient weather conditions considering the mist eliminator fouling / wash cycles.

ii. Design and optimization of liquid collectors in the absorber-outlet hood, absorber-outlet ducts, stack-liner entrance region and stack liner outlet to prevent SLD. The collectors will collect liquid from surfaces, re-entrainment, and guide the liquid to locations where it can be drained out of the system. This development work shall be conducted on a scale model of the wet duct and stack system, from the outlet of each absorber's mist eliminator to four diameters of stack-liner above the top of the breech (inlet duct entry level to chimney). Model scales shall be minimum 1:12 and to be selected to ensure accurate modeling results for all tested parameters. Model scale shall be finalized after the award of the contract. The design should be of integrated complete system of liquid collectors from absorber outlet to chimney top for each unit.

iii. The laboratory test includes details of liquid re-entrainment and drainage behavior over the expected range of unit operating conditions and confirm the stack-liner design velocity.

iv. Physical model shall include any internal devices larger than 3 inches in diameter/protrusion that may affect the flow, such as structural members, internal dampers, flow controls, and expansion joints. The model shall be mainly constructed from transparent acrylic or plastic, sheet metal, or coated rigid tubing such that it is suitable for wet testing. Modeled flow control and liquid collection devices may be constructed with sheet metal, or other suitable construction materials, so long as the scaled liquid flow performance is not adversely affected.

v. The physical model shall be tested for pressure and velocity profiles at selected cross sections through the ducts and liner. A velocity traverse shall be conducted within the modeled liner to ensure that the cyclonic flow levels are within the U.S. EPA Method 1 recommended limitations for Continuous Emissions Monitoring System (CEMS) operation. In the event testing indicates that cyclonic flow could be a concern at the CEMS elevation, a simulation, either by extension to the physical model or using a computational fluid dynamic model, shall be performed to evaluate this flow at the CEMS level. If needed, corrective devices shall be designed and tested to reduce stack swirl at the CEMS elevation.

vi. The physical model shall be tested by introducing liquid in a size and quantity such that the model shall approximately match the two-phase flow modeling requirements for droplet trajectory and loading. This testing shall be used to locate and design the liquid collection devices and drains.

vii. Evaluation of re-entrainment at liner-expansion joints in the laboratory test rig and development of a unit-specific liquid-collector geometry to collect and drain the liquid from the liner-expansion joints.

viii. Using this model effective internal liquid collection devices shall be developed and optimized to improve the droplet deposition and liquid collection in the stack as well as to prevent the re-entrainment of droplets from liquid pools and films.

ix. Bidder shall submit the detailed standard procedure for carrying out the physical model study at vendor lab for customer information / approval before the conductance of physical model study at lab.

2.03.00 Site inspection & supervision

Bidder to perform an onsite inspection as per the EPRI Revised Wet Stack Design Guideline, 2012. Site visit should occur for 7 days' time during the construction phase, when liquid collection system is nearing completion, to inspect the liquid collection system as installed to ensure that the designed flow controls, liquid collectors, drains, and drain protection are installed properly and shall perform as intended. Bidder to provide the site inspection report to validate the design and installation.

The onsite inspection should confirm that the liquid-collection system has been fabricated and installed correctly and to identify any deviations to the recommended design as a result of field modifications made to ease installation. The bidder shall also ensure the liquid collection system is installed properly.

The key deliverables from this study are:

a) Bidder to furnish the total quantity of condensate formed from absorber mist eliminator outlet to top of the stack.
b) Bidder to furnish the number, sizing and location of required various liquid collectors/ gutters, their shape, design of its evacuation piping from inside the chimney to outside and their Influence on the flow in the chimney liner.
c) Flow model study shall minimize system pressure losses and optimize collection and drainage and provide expected field wet stack system pressure loss across expected load range.
d) Bidder to achieve minimum stack liquid discharge. In case of excessive stack liquid discharge, possible means of modification to duct and stack geometry need to be proposed by bidder for improvement.
e) Bidder to ensure the design of effective liquid collection system for various plant load operating conditions and absorber combinations.
f) Bidder to furnish the comparison of the experimental and computer modelling.
g) Bidder to recommend modifications to prevent the chimney liquid discharge issues and to make the geometry more favorable for liquid collection.
h) Bidder to furnish the fabrication/installation drawings after the completion of model study for fabrication.
i) Bidder to identify appropriate liner system and gas inlet geometries (including flow control devices) to ensure homogeneous gas flow conditions and achieve cyclonic free flow distribution at the CEMS location.
j) Bidder to provide recommendations and design for sealing drain piping/ seal pots to inhibit backflow.

k) Bidder to recommend drain protection devices to minimize plugging occurrences and recommend method for monitoring liquid collection drainage flow in case of liquid collection system plugging and SLD problems.

l) Bidder to provide stack outlet modifications, such as liner extensions or chokes, to minimize stack icing occurrences and to provide Stack shell coating requirements to protect concrete shells from corrosion due to plume downwash.

m) Bidder to evaluate the plume downwash and recommend modifications to minimize downwash using CFD model preferably at reduced unit load operation and high wind speed conditions.

n) Bidder to provide the drawings/documents for the necessary provisions in Chimney during the course of this study, if applicable, to carry out the performance test for wet stack at site in future.

2.04.00 <u>Other General requirements</u>

a) Bidder to furnish the detailed Master drawing list for wet stack flow model study for BHEL and customer approval.

b) Bidder to provide technical advice/ recommendations/ assistance & solutions regarding site related construction problems related to condensate collection and drainage system in the duct and chimney as and when required including site visits, participation in meetings through VC/WEB with BHEL/ customer/ customer's consultant.

c) The physical model study may be witnessed by BHEL / Plant Owner for approximately 3 days. Intimation for the witnessing shall be provided by the bidder 4 weeks prior to conductance of physical model test at vendor lab. Video streaming facility shall also be provided for witnessing the physical model test from India. In addition, complete physical model test including the flow patterns and droplets trajectory shall be recorded on video CD which shall be provided after the physical model study.

d) The physical model shall be stored at the vendor lab at no cost for a period of 1 year after the submission of final report and completion of the study. Thereafter its further disposal or storage shall be decided after the award of the contract on the cost basis. Optional prices may be quoted for the same and this shall not be considered for the evaluation of bid.

e) The bidder is advised to take care all information that may be necessary for preparing the bid and entering into the contract. Claims of any kind due to variation or ignorance of site conditions and environmental conditions after award of works will not be entertained.

f) All revisions/changes required as per BHEL/ Project owners, comments/ requirements, site requirement etc. shall be carried out by the bidder.

g) Three hard copies of approved reports/documents/drawings shall be submitted by the bidder. Electronic copies of the CFD model, analysis and report shall be submitted in primary original format as well as in printable non-proprietary formats (e.g. .pdf).

h) Change in recommendation / design after the analysis shall be taken care by bidder without any commercial implication in this contract value.

i) Bidder shall furnish detailed activity schedule, report generation schedule and list of inputs required for successful execution of Wet stack flow model study.

j) The Purchaser/ Customer however also reserve the rights to check the detailed calculations in the event of order and their interpretation shall be final in the event of any conflict.

k) Bidder shall furnish all the documents in English and SI units shall also be followed in the calculations and reports wherever used.

3.00.00 DELIVERY SCHEDULE

Bidder has to carry out the complete activity including physical model, CFD, drawing /documents within 15 weeks from the date of purchase order (PO).

4.00.00 SUGGESTIVE DRAWINGS/ DOCUMENTS SUBMISSION:

Following Basic drawings/documents to be submitted within 2 weeks from PO date.

1. MASTER DRAWING /DOCUMENT LIST. (to be finalized after order)
2. WET STACK STUDY SCHEDULE, PLANNING AND MILESTONES
3. LIST OF CODES AND STANDARDS TO BE FOLLOWED.
4. DETAILED STANDARD PROCEDURE FOR ANALYTICAL/NUMERICAL CALCULATIONS, PHYSICAL MODEL & CFD STUDY, DRAWINGS and DOCUMENTS SUBMISSION.

5. DESIGN DRAWINGS OF CONDENSATE COLLECTION AND DRAINAGE SYSTEM
6. THERMAL AND ADIABATIC CONDENSATION CALULATIONS WITH DESIGN BASIS

Following Basic drawings/documents to be submitted and duly approved within 15 weeks from PO date.

1. TECHNICAL DATASHEETS
2. BILL OF QUANTITIES
3. WET STACK STUDY REPORT WITH RECOMMENDATIONS
4. CFD MODEL, ANALYSIS AND RESULTS

This is not an exhaustive list of drawings/ documents for WET STACK STUDY.

Bidder shall furnish all applicable drawings /documents other than as mentioned above which is/are required for successful execution of condensate collection and drainage system after the absorber outlet to stack outlet.

NOTE:

1. Subsequent revisions of above drgs/docs to be submitted within 7 days of comments received from BHEL/ CUSTOMER. In case there is delay in submission/ resubmission of drawings /documents beyond the drawing/document submission/resubmission schedule as indicated above, that much delay would be attributed to the bidder's account.

2. Drawings submitted shall be complete in all respects with revised drawing submitted incorporating all comments. For any clarification/ discussion required to complete the drawings, the bidder shall depute his personal for the table discussions or discussion through Video conferencing.

5.00.00 DOCUMENTS TO BE SUBMITTED ALONG WITH BID

a) Detailed procedure adopted for the conductance of the study.
b) Wet stack study planning and scheduling.
c) Computer program to be used for the 3D modelling and analysis.
d) Mathematical tools & codes / programs used for the analytical calculations.
e) Technical deviation schedule (if reqd.) (enclosed herein)

Apart from above no other drawings/documents/data sheets etc. are required to be submitted at bid stage and even if furnished shall not be taken cognizance of.

INTRODUCTION

1.00.00 BACKGROUND

Ramagundam Super Thermal Power Project (RSTPP) in District Karimnagar of Telangana was conceived as a coal based super thermal power plant for implementation by NTPC. RSTPP is presently operating with 2600 MW (3x200 MW + 4x500 MW) installed capacity and are under commercial operation.

As per A.P. Re-organisation Act 2014, NTPC has been mandated to set up 4000 MW Coal fired thermal power plant for Telangana State.

A meeting of NTPC Senior management team with the Hon'ble Chief Minister of Telangana was held on 8th July 2014. Thereafter, a multi-disciplinary team from NTPC made a site visit along with Singareni Collieries Company Limited (SCCL) officials on 7th & 8th August 2014 to explore the land availability around Ramagundam STPS and SCCL area for locating 4000 MW power plant.

Based on the team visit, NTPC informed Principal Secretary to Hon'ble Chief Minister, Govt. of Telangana vide dated 22.08.2014 confirming that NTPC is planning to set up 2 units of 800 MW under the name Telangana STPP Phase-I within NTPC's existing Ramagundam Station and 3 units of 800 MW under Phase-II of the project. After examining the various areas surveyed with M/s SCCL officials, it is found that the Phase-II can be set up in the land where M/s BPL Project was to come up at nearby areas (presently under sub-judice) only. Considering the location and optimization of available space at both locations to accommodate 4000 MW, 800 MW units have been proposed.

1.01.00 LOCATION AND APPROACH

Telangana Super Thermal Power Project (TnSTPP), Phase-I has been located within the MGR unloading bulb of NTPC's Ramagundam Super Thermal Power Station and situated at 18° 44' 47" (N) to 18° 45' 30" (N) and longitude 79° 28' 06" (E) East to 79° 28' 36" (E).

TnSTPP is located at about 51 km from district headquarter Karimnagar and at about 1 km near Ramagundam village. The site is well connected through NH-07 and NH-16 through (Hyderabad-Mancherial Road popularly known as Rajiv Rahadari). Nearest railway station Ramagundam is about 5 km from the plant which lies on the main Kazipet-Balarshah Broad Gauge line of South Central Railway. The nearest commercial airport Hyderabad is at a distance of about 210 km.

Vicinity Plan of the proposed project is placed at **EXHIBIT -1**.

1.02.00 Land

The proposed two units of 800 MW capacity will be set up in the available land (about 250 acre) in MGR unloading bulb area within existing premises of RSTPP.

For ash disposal land at two different locations has been identified. First location is 662 acre plot (one of three plots allotted to M/s BPL power plant. However, all the three plots have been taken back by State Govt. due non development and are

sub-judice) / Govt. land to the tune of 600 acre being offered by State Govt. and the second is Medipally mine void of M/s SCCL.

The initial disposal area (662 acre plot earlier allotted to M/s BPL) is located at about 10 km from the plant. The alternate Govt. land (600 acre) is located at about 12 km. Both Bottom ash and fly ash will be disposed-off to above area till the Medipally mine void made available for disposal. Subsequently, fly ash will be disposed-off in mine void, located about 10 km from the plant, while bottom ash will continue to be disposed-off in first location (662 acre plot) / the alternate Govt. land (600 acre).

1.03.00 Water

The expected source of water for the project is from Yellampally Barrage, on Godavari River, at a distance of about 12 km from the proposed plant. Special Chief Secretary (Energy) have assured that water shall be made available for the proposed power plant.

Make up water requirement for this project would be about 4600 cum/hr (about 45 Cusecs) with ash water recirculation system and about 5900 cum/hr (about 58 Cusecs) with once through ash water system.

Re-circulating type CW system with Induced draft cooling towers have been envisaged for the project.

1.04.00 Capacity

Telangana STPP, Phase-I	:	2x800 MW	-	Present proposal
Telangana STPP, Phase-II	:	3x800 MW	-	Future

1.05.00 Meteorological data

The meteorological data from nearest observatory (Ramagundam) is placed at **EXHIBIT - 2.**

1.06.00

1.06.01

EXHIBIT -1

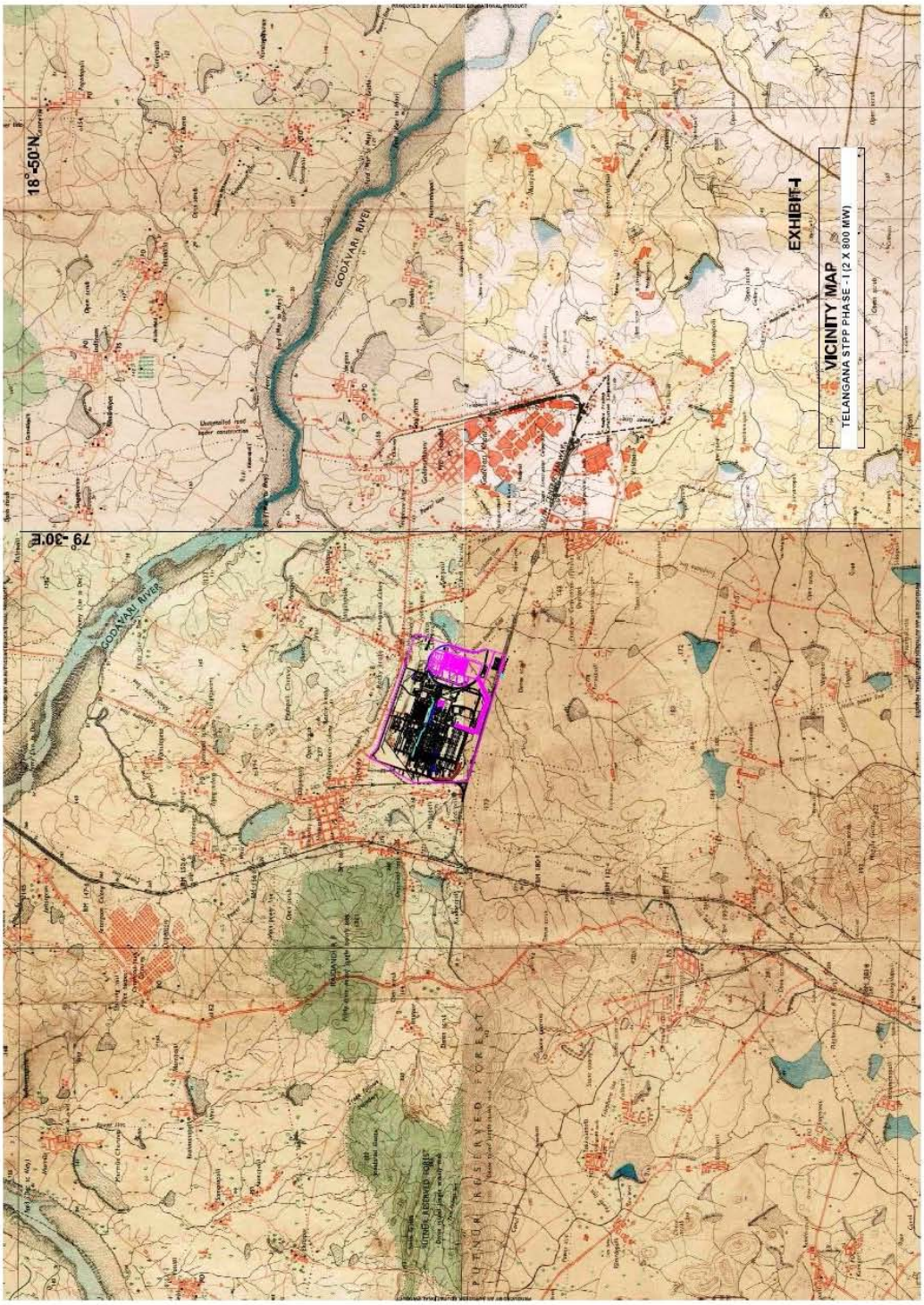
VICINITY MAP
TELANGANA STPP PHASE - I (2 X 800 MW)
EXHIBIT-I
18°-50'N
79°-30'E
GODAVARI RIVER
GODAVARI RIVER
PUTNUR RESERVED FOREST

जलवायवी सारणी
CLIMATOLOGICAL TABLE

स्टेशन : रामगुंडम
STATION :Ramgundam

अक्षांश LAT 18°46′ N देशांतर LONG 79°26′ E समुद्री तल माध्य से ऊँचाई HEIGHT ABOVE M. S. L. 156 METRES

1951 से 1980 तक के प्रेक्षणों पर आधारित
BASED ON OBSERVATIONS FROM 1951 TO 1980

माह / MONTH	स्टेशन का सतह दाब / STATION LEVEL PRESSURE (एच. पी. ए. / hPa)	वायु तापमान / AIR TEMPERATURE — माध्य / MEAN: शुष्क बल्ब / DRY BULB (डि.सें. / °C)	नम बल्ब / WET BULB (डि.सें. / °C)	दैनिक अधिकतम / DAILY MAX (डि.सें. / °C)	दैनिक न्यूनतम / DAILY MIN (डि.सें. / °C)	माह में उच्चतम / HIGHEST IN THE MONTH (डि.सें. / °C)	माह में निम्नतम / LOWEST IN THE MONTH (डि.सें. / °C)	चरम / EXTREMES: उच्चतम / HIGHEST (डि.सें. / °C)	दिनांक और वर्ष / DATE AND YEAR	निम्नतम / LOWEST (डि.सें. / °C)	दिनांक और वर्ष / DATE AND YEAR	आर्द्रता / HUMIDITY: सापेक्ष आर्द्रता / RELATIVE HUMIDITY (प्रतिशत / %)	वाष्प दाब / VAPOUR PRESSURE (एच.पी.ए. / hPa)	मेघ की मात्रा / CLOUD AMOUNT (आकाश के अष्टमांश / Oktas of sky): समस्त मेघ / ALL CLOUDS	निम्न मेघ / LOW CLOUDS	वर्षा / RAINFALL: मासिक योग / MONTHLY TOTAL (मि.मि. / mm)	वर्षा के दिनों की संख्या / NO. OF RAINY DAYS	वर्षसहित सबसे नम महीने का योग / TOTAL IN WETTEST MONTH WITH YEAR (मि.मि. / mm)	वर्षसहित शुष्कतम महीने का योग / TOTAL IN DRIEST MONTH WITH YEAR (मि.मि. / mm)	24 घंटों की सबसे भारी वर्षा / HEAVIEST FALL IN 24 HOURS (मि.मि. / mm)	दिनांक और वर्ष / DATE AND YEAR	माध्य पवन गति / MEAN WIND SPEED (कि.मी. प्र. घं. / Kmph)
जनवरी JAN I	998.1	20.0	16.4	30.8	15.8	33.3	10.9	35.3	28 1974	8.4	10 1972	68	15.9	1.7	0.8	7.8	0.5	53.0 1966	0.0	47.6	20 1979	4.5
	994.1	28.8	19.2									37	14.5	1.6	0.7							
फरवरी FEB I	996.2	23.0	18.0	33.9	18.8	37.1	13.8	39.4	29 1980	9.4	08 1949	60	16.8	1.7	0.9	5.1	0.6	32.4 1975	0.0	24.0	21 1968	5.3
	991.9	32.3	20.3									30	14.1	1.6	0.8							
मार्च MAR I	994.4	26.8	20.2	37.5	22.3	40.6	17.4	42.8	27 1953	13.0	11 1979	53	18.3	1.7	0.8	12.0	1.0	71.6 1951	0.0	39.2	05 1970	6.4
	989.5	35.9	21.6									25	14.1	1.8	1.0							
अप्रैल APR I	991.6	30.2	23.1	40.3	26.2	43.6	21.5	45.6	29 1973	15.4	20 1971	53	22.5	2.3	0.7	15.7	1.1	68.6 1962	0.0	62.0	24 1961	7.9
	986.3	38.6	23.5									25	16.6	3.2	1.7							
मई MAY I	987.6	32.9	23.9	42.4	29.0	45.6	23.8	47.2	19 1948	20.4	01 1977	46	22.3	2.6	0.9	28.4	2.0	142.2 1977	0.0	111.2	01 1977	7.9
	982.6	40.4	24.6									25	17.9	3.6	2.1							
जून JUN I	985.4	30.0	24.3	37.8	27.1	43.8	22.4	47.2	08 1953	19.4	03 1973	63	25.7	5.3	2.3	171.3	8.4	366.8 1956	0.0	140.7	20 1953	8.4
	981.2	35.5	25.4									45	24.1	5.7	3.5							
जुलाई JUL I	985.4	27.0	24.2	32.5	24.5	36.8	22.0	41.0	06 1966	18.8	14 1973	79	28.0	6.6	3.6	309.2	15.2	599.6 1976	104.3 1970	130.7	23 1977	7.0
	982.2	30.7	25.4									65	28.0	6.6	3.9							
अगस्त AUG I	986.4	26.4	24.1	31.6	24.2	35.0	22.2	37.4	28 1960	19.8	31 1965	82	28.1	6.4	3.6	243.8	13.8	487.4 1953	59.6 1968	104.4	21 1980	5.8
	983.3	29.8	25.2									68	28.2	6.5	3.9							
सितम्बर SEP I	989.0	26.9	24.3	32.5	24.1	35.7	21.8	38.0	02 1968	17.8	30 1972	80	28.4	5.1	2.3	190.7	9.2	404.8 1966	65.8 1971	128.0	20 1969	4.8
	985.5	30.2	25.1									66	27.7	5.7	3.2							
अक्तूबर OCT I	993.1	26.1	22.8	33.1	22.3	35.9	18.1	38.4	11 1957	15.4	14 1972	75	25.2	3.1	1.2	94.5	4.4	539.6 1973	0.0	135.8	24 1973	3.9
	989.5	30.4	23.4									55	23.2	3.9	2.1							
नवम्बर NOV I	996.7	22.8	19.0	31.2	18.1	33.9	13.8	36.6	06 1977	9.0	30 1970	69	19.1	2.2	0.7	18.8	1.2	118.0 1962	0.0	70.2	05 1961	3.5
	993.3	28.4	20.5									46	17.7	2.6	0.9							
दिसम्बर DEC I	998.5	19.7	16.3	29.9	14.9	32.6	11.0	34.5	26 1976	7.8	10 1970	69	16.0	1.7	0.5	9.7	0.6	109.4 1962	0.0	101.2	02 1966	3.2
	994.8	27.3	18.8									41	14.9	2.0	0.4							
वार्षिक योग या माध्य ANNUAL TOTAL OR MEAN I	991.9	26.0	21.4	34.5	22.3	45.7	9.9	47.2		7.8		66	22.2	3.4	1.5	1107.0	58.0	1672.8 1973	565.2 1952	140.7		5.7
II	987.9	32.4	22.8									44	20.1	3.7	2.0							
वर्षों की सं NUMBER OF YEARS I	30	30	30	30	30	30	30	33		33		30	30	30	24	30	30	33	33	33		24
II	30	30	30									30	30	30	24							

2x800 MW NTPC Karimnagar Project, Telangana

Annexure-II

Clean flue gas at FGD outlet terminal point

	Guarantee Point	Design Point	Maximum Condition (BMCR Worst Coal)	Minimum Condition (50% TMCR)
N2, vol%	68.13	65.35	68.11	69.39
O2, vol%	5.98	5.74	5.99	7.5
CO2, vol%	10.4	9.98	10.39	9.16
H2O, vol%	15.48	18.92	15.5	13.94
SO2, ppmv	22.53	21.57	26.86	11.6
SO3, ppmv	8.12	7.55	9.6	5.83
HCl, ppmv	0.13	0.12	0.13	0.13
HF,ppmv	0.01	0.01	0.08	0.01
Total Flow, Nm3/hr (per boiler)	3130551	33,75,841	34,86,648	18,28,943
Pressure at breech, KPag	0.392	0.392	0.392	0.392
Temperature, deg C	54.5	58.6	54.5	52.4
Density, kg/m3	1.033	1.005	1.033	1.04
Molecular Weight	28.4	27.95	28.4	28.4
Pressure drop from Absorber outlet till stack outlet, mmWC	41	50	50	21

NOTES:

1.0 Above values are preliminary and shall be finalised during detailed engineering.

2.0 The maximum mist carryover from mist eliminator shall be equal to 20 mg/Nm3.The flue gas will be in saturated condition with mist concentration of ≤ 20 mg/Nm3. The droplet size distribution of the mist after the mist eliminator (ME) is typically from 10 to 250 micron, but the major part is expected to be below 30 micron as per FGD supplier.

FIRST ANGLE PRJECTION | ALL DIMENSIONS ARE IN MM

DRAWING NO. PE-DG-424-620-C001

NORTH

270.00	26250	700	CYLINDRICAL
268.00	26250	700	
262.50	26250	700	
250.00	26250	700	
240.00	26250	700	
230.00	26250	700	
220.00	26250	700	
215.00	26250	700	
205.00	26250	700	
195.00	26250	700	
185.00	26250	700	
175.00	26250	700	
170.00	26250	700	
160.00	26250	700	
150.00	26250	700	
140.00	26250	700	
130.00	26250	700	
125.00	26456	711	1:45000 (925)
115.00	26867	733	UNIFORM LINEAR TAPER (II)
105.00	27278	756	
95.00	27689	778	
85.00	28100	800	
80.00	28650	811	1:45000 (470)
70.00	29750	833	UNIFORM LINEAR TAPER(I)
60.00	30850	856	
50.00	31950	878	
40.00	33050	900	
29.300	34481	939	1:41500 (775)
22.100	35444	965	UNIFORM LINEAR TAPER(I)
14.900	36407	991	
9.000	37196	1012	
+2.100	38119	1037	
±0.000	38399	1045	
−1.500	38600	1050	
ELEVATION (M)	OUTSIDE DIAMETER OF SHELL (mm)	SHELL THK (mm)	OUTSIDE PROFILE OF SHELL (mm)

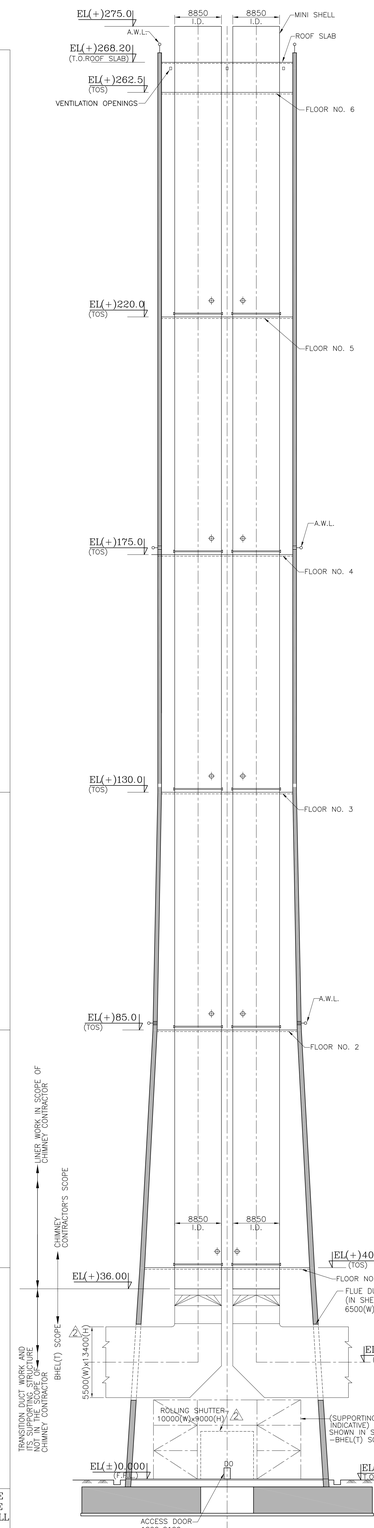

SECTION

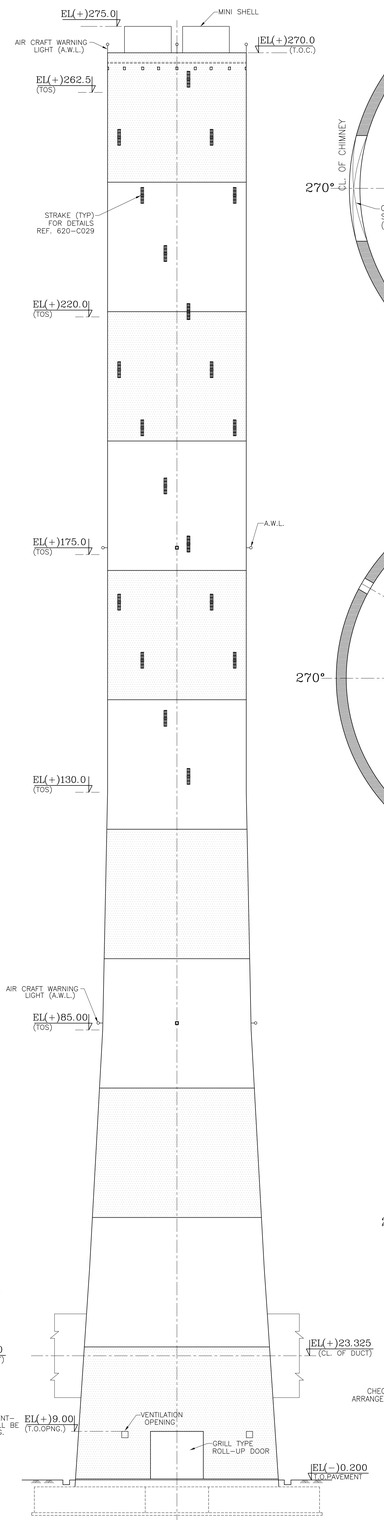

ELEVATION

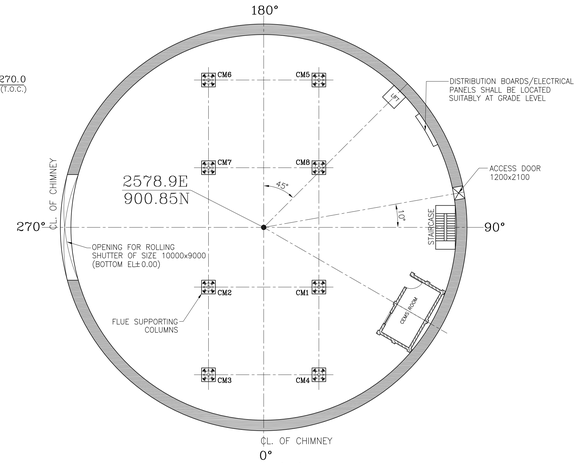

PLAN AT EL(±)0.00M

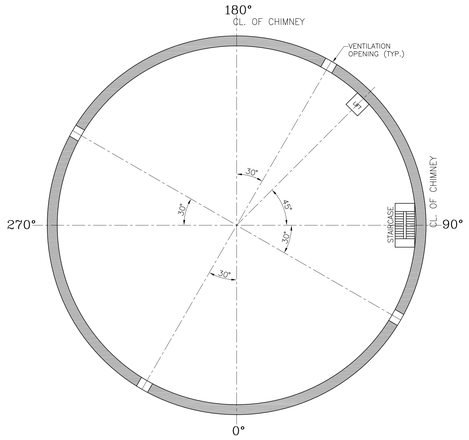

PLAN AT EL(+)9.00M

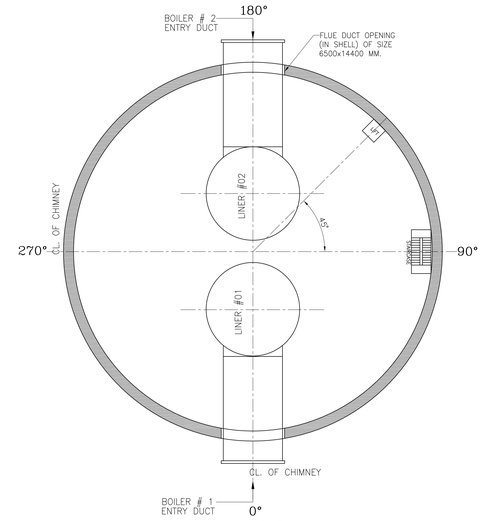

PLAN AT EL(+)22.100M

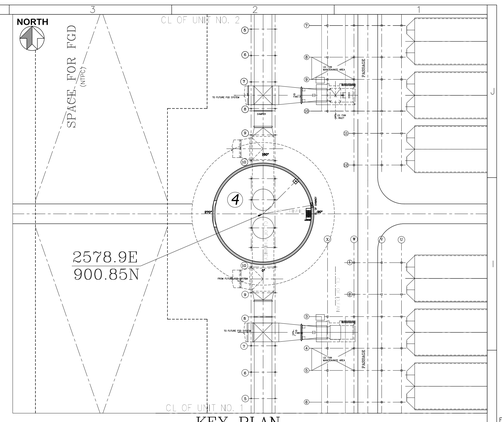

KEY PLAN

DRAWING LIST

S.NO.	DRAWING NO.	DRAWING TITLE
1.	PE-DG-424-620-C001	GENERAL ARRANGEMENT
2.	PE-DG-424-620-C002	G.A. OF FOUNDATION
3.	PE-DG-424-620-C003	RCC DETAILS OF FOUNDATION AND STARTER BARS
4.	PE-DG-424-620-C004	SHUTTERING & REINFORCEMENT DETAILS OF CHIMNEY SHELL
5.	PE-DG-424-620-C005	DETAILS OF SHELL OPENINGS
6.	PE-DG-424-620-C006	DETAILS OF EXTRA REINFORCEMENT AROUND SHELL OPENINGS
7.	PE-DG-424-620-C007	DETAILS OF INTERNAL PLATFORMS (SH1)
8.	PE-DG-424-620-C008	DETAILS OF INTERNAL PLATFORMS (SH2)
9.	PE-DG-424-620-C009	DETAILS OF LINER SUPPORT BEAMS
10.	PE-DG-424-620-C010	DETAILS OF LINER RESTRAINT
11.	PE-DG-424-620-C011	DETAIL OF GAS SAMPLING PORTS
12.	PE-DG-424-620-C012	DETAIL OF MANHOLES IN FLUES
13.	PE-DG-424-620-C013	DETAILS OF GRADE SLAB
14.	PE-DG-424-620-C014	G.A. AND R.C.C. DETAILS OF ROOF SLAB
15.	PE-DG-424-620-C015	LAYOUT AND DETAILS OF STRAKES
16.	PE-DG-424-620-C016	MISCELLANEOUS DETAILS FOR DOORS, ROLLING SHUTER, ROOF HATCH, ETC.
17.	PE-DG-424-620-C017	DETAIL OF RCC MINISHELL AND C.I. CAP
18.	PE-DG-424-620-C018	DETAILS OF STEEL STAIRCASE
19.	PE-DG-424-620-C019	LINER GENERAL ARRANGEMENT
20.	PE-DG-424-620-C020	CHIMNEY LINER DETAILS – CAN TYPE 'A'
21.	PE-DG-424-620-C021	CHIMNEY LINER DETAILS – CAN TYPE 'D'
22.	PE-DG-424-620-C022	CHIMNEY LINER DETAILS – CAN TYPE 'F'
23.	PE-DG-424-620-C023	CHIMNEY LINER DETAILS – CAN TYPE 'G'
24.	PE-DG-424-620-C024	CHIMNEY LINER DETAILS – CAN TYPE 'B'
25.	PE-DG-424-620-C025	CHIMNEY LINER DETAILS – CAN TYPE 'E'
26.	PE-DG-424-620-C026	DETAIL OF LINER EXPANSION JOINTS
27.	PE-DG-424-620-C027	FIXING DETAILS OF LINER INSULATION
28.	PE-DG-424-620-C028	CHIMNEY PAINTING
29.	PE-DG-424-620-C029	DETAILS OF STRAKES

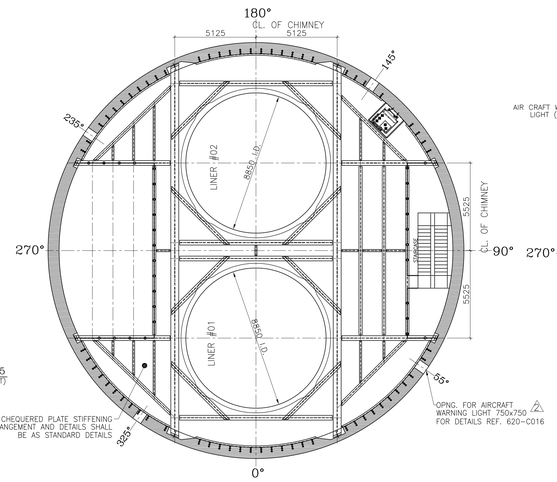

TYP.PLAN FOR PLATFORMS

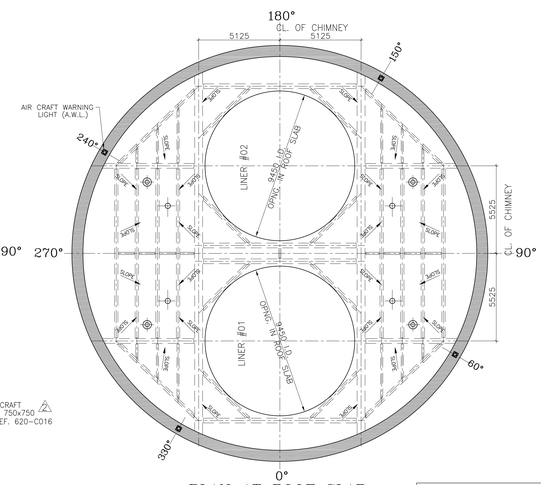

PLAN AT ROOF SLAB
(T.O.C. = EL+268.200 M.)

RELEASED FOR CONSTRUCTION
DRAWING APPROVED VIDE NTPC TRANSMITTAL NO. 102:2635, DATED 04.05.2017

BHEL-PROJECT ENGINEERING MANAGEMENT (CIVIL)	
THIS DRAWING IS RELEASED FOR CONSTRUCTION	
STAMP ALL PREVIOUS REVISION AS SUPERSEDED	
ISSUED BY	
NAME	Manoj Kr. Prasad
SIGNATURE	
DATE	18/08/2017

NOTES: –

1. ALL DIMENSIONS ARE IN MILLIMETRES AND LEVELS ARE IN METRES.
2. COMPLIANCE WITH STANDARDS SHALL RELATE TO LATEST PUBLISHED EDITIONS.
3. ALL ELEVATIONS ARE REFERRED TO THE FINISHED GROUND FLOOR LEVEL OF POWER HOUSE BUILDING AS EL(±)0.00 M WHICH CORRESPONDS TO RL(+)149.00 M. ABOVE MEAN SEA LEVEL.
4. THE OTHER COMPONENTS OF THE CHIMNEY INCLUDE ROLL UP DOORS, PERSONNEL ACCESS DOORS, HAND RAILS, HOOD HATCH, LINER TEST PORTS, NON METALLIC EXPANSION JOINTS, RAIN WATER DRAINAGE SYSTEM, VENTILATION OPENINGS, ELECTRICAL POWER SUPPLY DISTRIBUTION BOARDS, LIGHTING PANELS, SOCKET OUTLETS, POWER AND CONTROL CABLING, RACEWAY SYSTEM, STAIR AND PLATFORM LIGHTING, LIGHTNING PROTECTION & GROUNDING SYSTEM, COMMUNICATIONS SYSTEM ETC. AND SHALL BE PROVIDED AS PER TECHNICAL SPECIFICATIONS.
5. FOR STANDARD NOTES & DETAILS FOR RCC WORKS REFER APPROVED DRG. NO. PE-DG-424-600-C001.
6. FOR STRUCTURAL DETAILS, WELDING, HANDRAILING ETC. REFER APPROVED DRG. NO. PE-DG-424-600-C002.
7. AIRCRAFT WARNING LIGHT (A.W.L.) SHALL BE PROVIDED TO MEET THE REQUIREMENT OF RELEVANT STANDARD STATUTORY BODY.

REV.	DATE	ALTD	CHD	APPD
2.	18.08.17	SK	MTA	AN
1.	REVISED AS MKD.			
2.	REVISED AS PER CUSTOMER'S COMMENTS.			
3.	RELEASED FOR CONSTRUCTION			

REV.	DATE	ALTD	CHD	APPD
1	15.04.17	SK	MTA	Sd/-
1.	REVISED AS MKD.			
2.	REVISED AS PER CUSTOMER'S COMMENTS.			

JOB NO. 424

STATUS CONTRACT

DISTRIBUTION

PRINT SCALE IN METRE 0 2 4 6 8 10 20 30 40 50

NTPC DRG. NO. 9591-102-315-PVC-C-0552A

OWNER: NTPC Limited (A GOVERNMENT OF INDIA ENTERPRISE)

PROJECT: TELANGANA SUPER THERMAL POWER PROJECT PHASE-I (2x800MW) KARIMNAGAR (STEAM GENERATOR ISLAND PACKAGE)

BHARAT HEAVY ELECTRICALS LTD POWER SECTOR PROJECT ENGINEERING MANAGEMENT NOIDA (U.P.)

DEPT CODE		NAME	SIGN	DATE
C	DRN	SANJAY	Sd/-	09.11.2016
	DESN	TABREZ	Sd/-	09.11.2016
	CHD	SSB	Sd/-	09.11.2016
	APPD	AN	Sd/-	09.11.2016

TITLE: CHIMNEY GENERAL ARRANGEMENT

MPL	ELEC	C&I	MSE	MAX	DEPT.	SCALE 1:200	DRAWING NO.
					SIGN		PE-DG-424-620-C001
					DATE		SHEET 1 OF 1 REV. 2

Aug 18, 2017 – 12:24pm
FORMAT SIZE A0

CAD FILE NAME: D:\PROJECTS\KARIM NAGAR\424-620-C001 R2.dwg

COPY RIGHT AND CONFIDENTIAL
The information on this document is the property of BHARAT HEAVY ELECTRICALS LIMITED
It must not be used directly or indirectly in any way detrimental to the interest of the company.

ANNEXURE IV : MINISHELL DETAILS

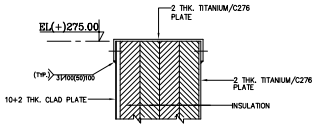

DETAIL AT 'A'

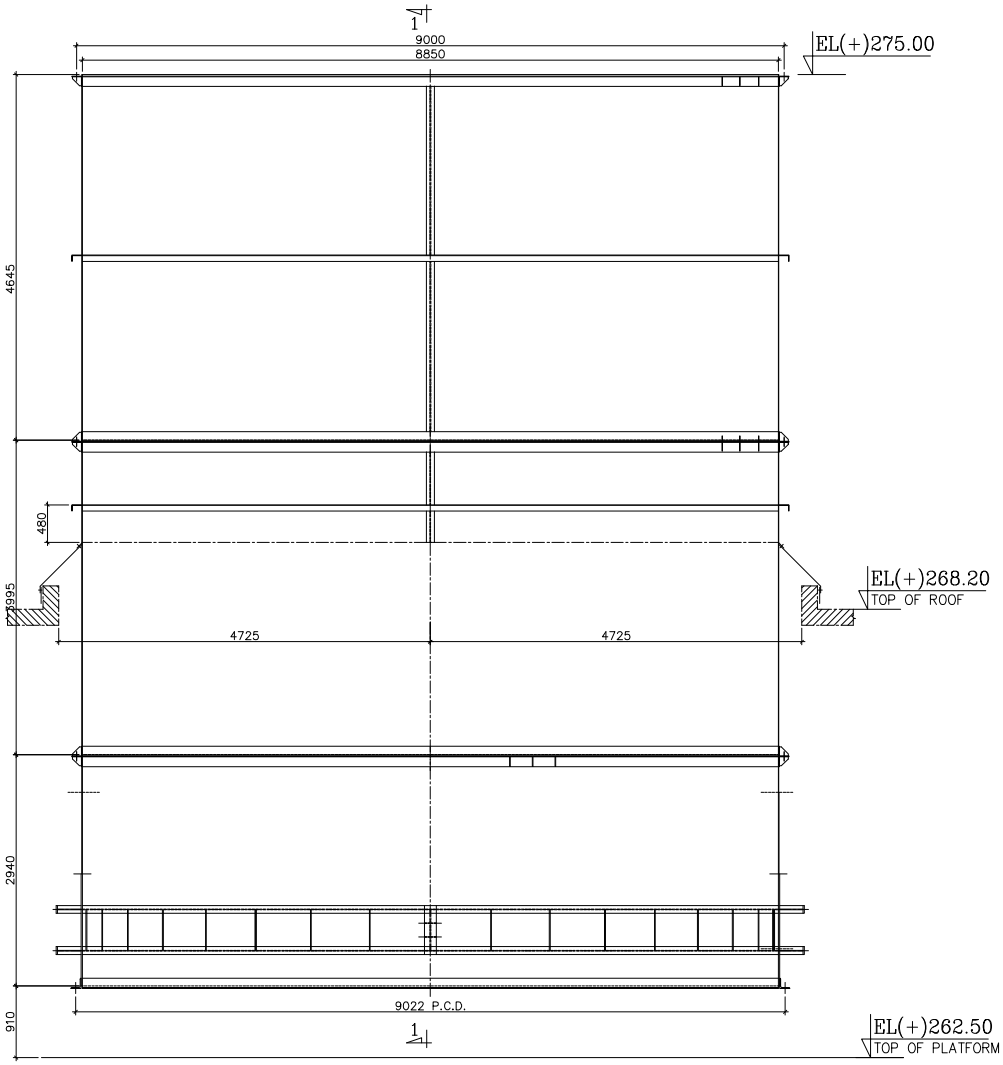

ELEVATION OF MINISHELL

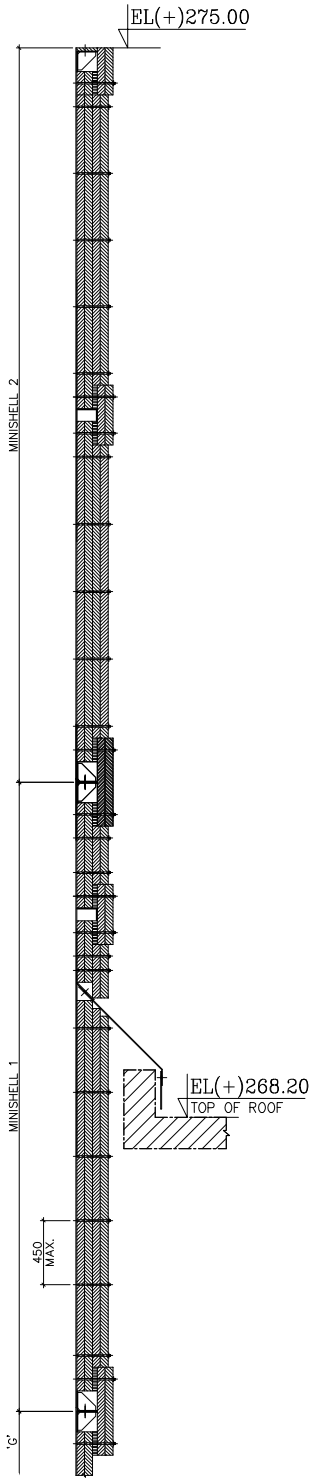

SECTION 1–1

SHOWING INSULATION FIXING

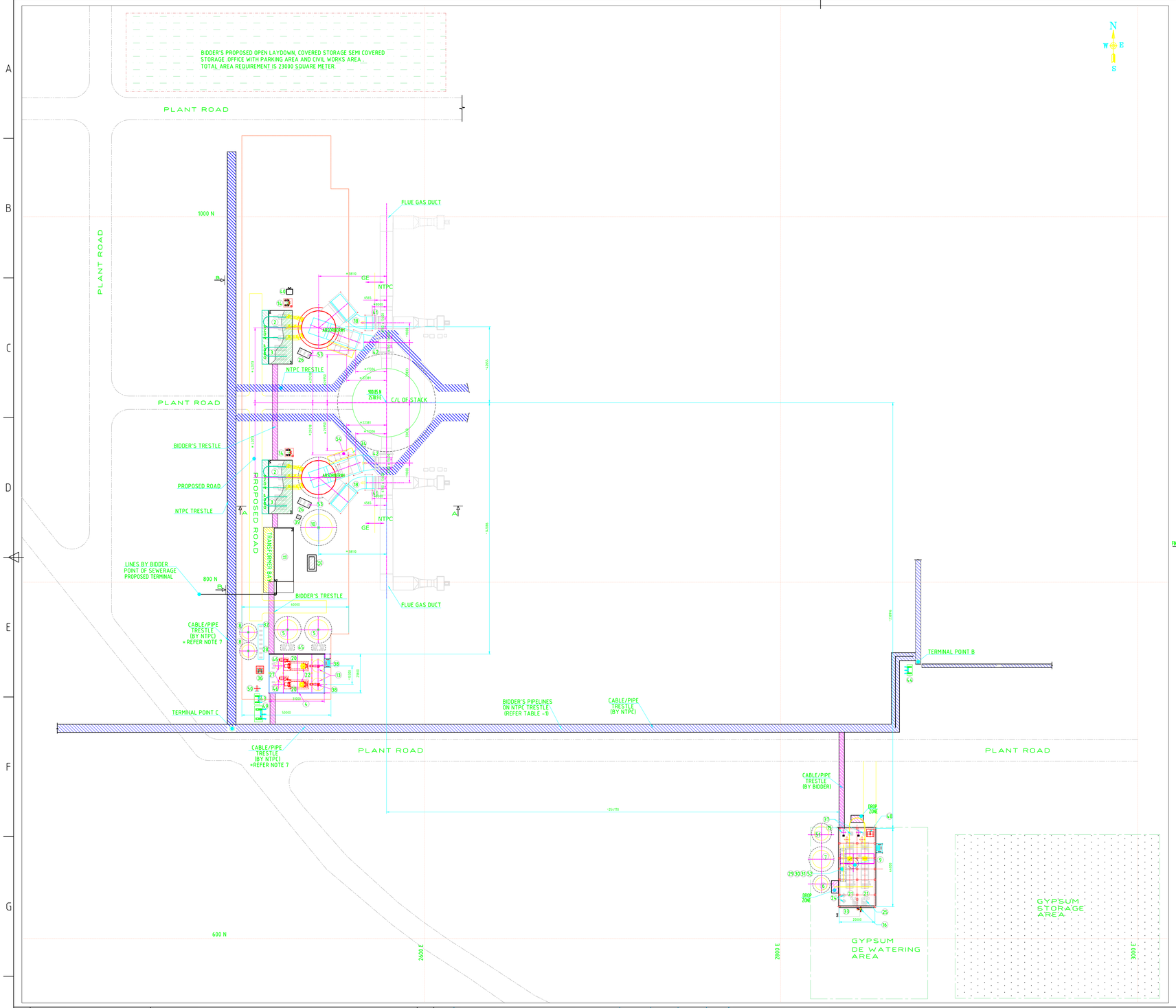

LEGENDS:

ITEM NO.	DESCRIPTION	ITEM NO.	DESCRIPTION
1	ABSORBER	28	PROCESS WATER PUMP
2	RECYCLE PUMPS	29	WASTE WATER PUMP
3	OXY-BLOWERS	30	FILTRATE WATER PUMP
4	LIMESTONE BLDG.	31	SECONDARY HC FEED PUMP
5	LIMESTONE SLURRY TANK	32	MIST ELIMINATOR WASH PUMP
6	WASTE WATER TANK	33	LIME STORAGE BUILDING
7	FILTRATE WATER TANK	34	EMERGENCY QUENCH TANK
8	PROCESS WATER TANK	35	DG SET
9	SECONDARY HC FEED TANK	36	LIMESTONE BUILDING SUMP
10	AUX. STORAGE TANK	37	VACUUM PUMP
11	ELECTRICAL BUILDING	38	LIMESTONE WEIGH FEEDER
12	DE-WATERING BUILDING	39	AUX. STORAGE RETURN PUMP
13	LIMESTONE SILO	40	ANALYZER ROOM
14	ABSORBER AREA SUMP	41	INLET DAMPER (CUSTOMER'S SCOPE)
15	CAKE WASH TANK	42	OUTLET DAMPER (CUSTOMER'S SCOPE)
16	BUCKET ELEVATOR	43	CLOSED COOLING WATER PUMP
17	ABSORBER OUTLET DUCT	44	CLARIFIED WATER BOOSTER PUMP
18	ABSORBER INLET DUCT	45	LIMESTONE SLURRY PUMP
19	RECYCLE PIPES	46	MILL CIRCUIT PUMP
20	BALL MILL	47	ELEVATOR & STAIR TOWER
21	BELT FILTER	48	DE WATERING BUILDING SUMP
22	MILL HYDROCYCLONE	49	C. W. BLOWDOWN BOOSTER PUMP
23	PRIMARY HYDROCYCLONE	50	D M WATER TANK
24	SECONDARY HYDROCYCLONE	51	PRIMARY HYDROCYCLONE FEED TANK
25	LIME SILO & NEUTRALIZATION TANK	52	PRIMARY HYDROCYCLONE FEED PUMP
26	GYPSUM BLEED PUMP	53	ABSORBER DRAIN PUMP
27	MILL SEPERATOR TANK	54	ABSORBER STAIR TOWER

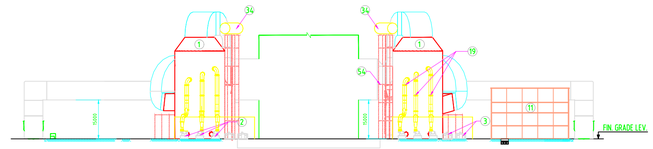

ELEVATION (VIEW B-B)

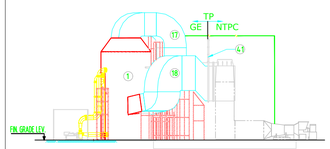

ELEVATION (VIEW A-A)

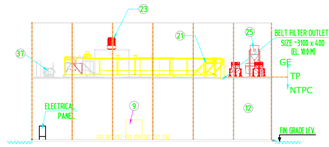

TYPICAL ELEVATION DE-WATERING BUILDING (NOT TO SCALE)

TABLE 1:

PIPELINE LIST FOR CONNECTIONS OF TERMINAL POINTS AND GYPSUM DE WATERING AREA ONLY

ITEM NO.	DESCRIPTION	FLUID	LINE SLOPE	PIPE SIZE (NB) (PRELIMINARY)
1	PROCESS WATER PUMP LINE 1	WATER	NO	250
2	PROCESS WATER PUMP LINE 2	WATER	NO	250
3	COOLING WATER BLOWDOWN TAPPING	WATER	NO	400
4	GYPSUM BLEED LINE 1	SLURRY	YES	200
5	GYPSUM BLEED LINE 2	SLURRY	YES	200
6	DEWATERING AREA SUMP LINE	SLURRY	YES	100
7	FILTRATE WATER PUMP 1	WATER	NO	250
8	CLARIFIED WATER BOOSTER LINE	WATER	NO	50
9	INSTRUMENT AIR LINE	AIR	NO	50
10	SERVICE AIR LINE	AIR	NO	80
11	CLOSED COOLING WATER LINE	WATER	NO	50
12	PORTABLE WATER LINE	WATER	NO	50
13	WASTE WATER LINE	WATER	NO	50

ALL PIPES ARE WITHOUT INSULATION.PIPE SPEC AS PER IS-1239-I (HVY) UPTO 6 INCH AND IS:3589 ABOVE 6 INCH.

CABLE NEAR/INSIDE FGD AREA- 6 x 600 TRAYS

CABLE FROM FGD AREA TO DEWATERING AREA- 2 x 600 + 1 x 600 TRAYS

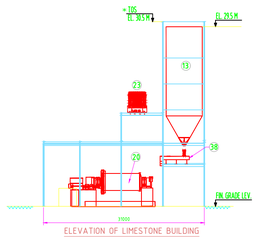

ELEVATION OF LIMESTONE BUILDING

SCHEDULE OF TERMINAL POINTS FOR FGD

TABLE 2

ITEM NO.	DESCRIPTION	FLUID	CUSTOMER'S MARKING
1	PROCESS WATER	WATER	C
2	EQUIPMENT COOLING WATER	WATER	B
3	GYPSUM WASH WATER (CLARIFIED WATER)	WATER	B
4	POTABLE WATER	WATER	C
5	WASTER WATER	WATER	C
6	INSTRUMENT AIR	AIR	B
7	SERVICE AIR	AIR	B

NTPC PIPE/CABLE TRESTLE

BIDDER'S PIPE/CABLE TRESTLE

THIS DRAWING IS PROPERTY OF GE POWER India Limited AND MUST NOT BE COPIED WITHOUT OUR CONSENT NOR MADE AVAILABLE TO THIRD PARTY.

REFERENCES

DRAWING NO	TITLE

REVISION HISTORY

REV	DESCRIPTION	DATE	DRN.	CHD.	APP.
00	INITIAL ISSUE	11.01.17	SUB		
01	REVISED AS PER ISSUED AMENDMENTS	19.12.17	SUB		

NOTE:-

1. ALL DIMENSIONS ARE IN mm AND ELEVATIONS ARE IN METER. DUCT DIMENSIONS REFER TO ID OF DUCT. ALL DIMENSIONS ARE PRELIMINARY AND SUBJECT TO CHANGE.
2. THIS DRAWING HAS BEEN PREPARED BASED ON CUSTOMER'S DRAWING NOS. 9591-999-POC-F-0011REV-01) & 9591-999-POM-F-0011REV-05), 9599-109-POM-A-0081REV-A)- SHEET 1&2.
3. CUSTOMER TO PROVIDE CAD VERSION DIMENSIONAL DRAWING OF THE PLANT LAYOUT (PLAN AND ELEVATION) FOR FINALIZATION OF ARRANGEMENT.
4. * MARKED DIMENSIONS ARE TO BE FINALIZED AFTER DETAIL DUCTING DRAWINGS FROM ID FAN TO STACK ARE PROVIDED BY CUSTOMER.
5. DETAIL OF PIPE AND CABLE TRESTLES TO BE PROVIDED BY CUSTOMER FOR ROUTING OF THE RESPECTIVE LINES OF BIDDER. FOR THE PIPE AND CABLE CONNECTIONS FROM TERMINAL POINTS TO FGD AREA AND DE WATERING AREA ALONG WITH PIPE AND CABLE CONNECTIONS BETWEEN FGD AND DEWATERING AREA, BIDDER WILL USE EMPLOYER'S PIPE/ CABLE TRESTLES.
6. THE LOCATION OF EQUIPMENTS, ELEVATORS AND STAIR TOWERS ARE INDICATIVE.
7. THE CONSTRUCTION OF THE MARKED PIPE/CABLE TRESTLES SHALL BE CONDUCTED BY EMPLOYER AFTER COMPLETION OF FGD ERECTION, ENABLING BIDDER TO COMPLETE THE ERECTION ACTIVITY IN THE FGD AREA.
8. THE DETAIL OF TERMINAL POINTS AS PER TABLE 2 TO BE PROVIDED BY CUSTOMER.
9. THE ANALYZER ROOM FOR THE DITEC ABSORBER UNIT IS TO BE PLACED INSIDE ELECTRICAL BUILDING

PRELIMINARY

Scale	NTS=Not to scale	
	1:800	
	SIGN	DATE
DESIGN ENG		
DRAWN	SUB	20.01.17
CHECKED		
CHECKED		
APPROVED	XX	

GE POWER India Limited

Alternate Drawing no.

CONSULTANT: NONE

CUSTOMER : NTPC LIMITED

Project: TELANGANA SUPER THERMAL POWER PROJECT, PHASE-II(2x800 MW)

Title: LAYOUT OF FGD SYSTEM

Drawing No. QFECSISC6084-665-LAARR-0001-REV-(01)

ANNEXURE - VI

EXPANSION COMPENSATOR

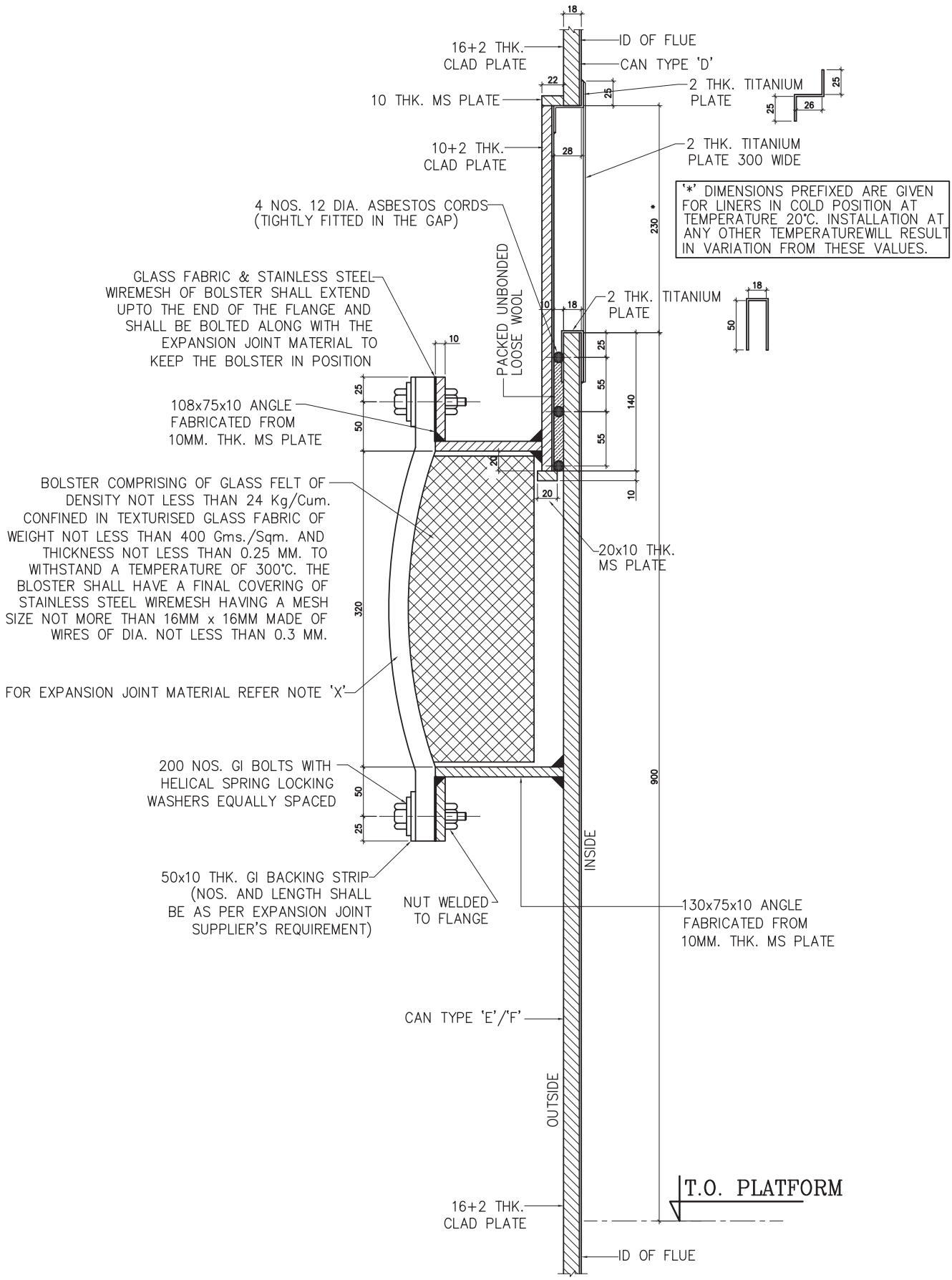

EXPANSION JOINT DETAILS

SARADHA NAGAR

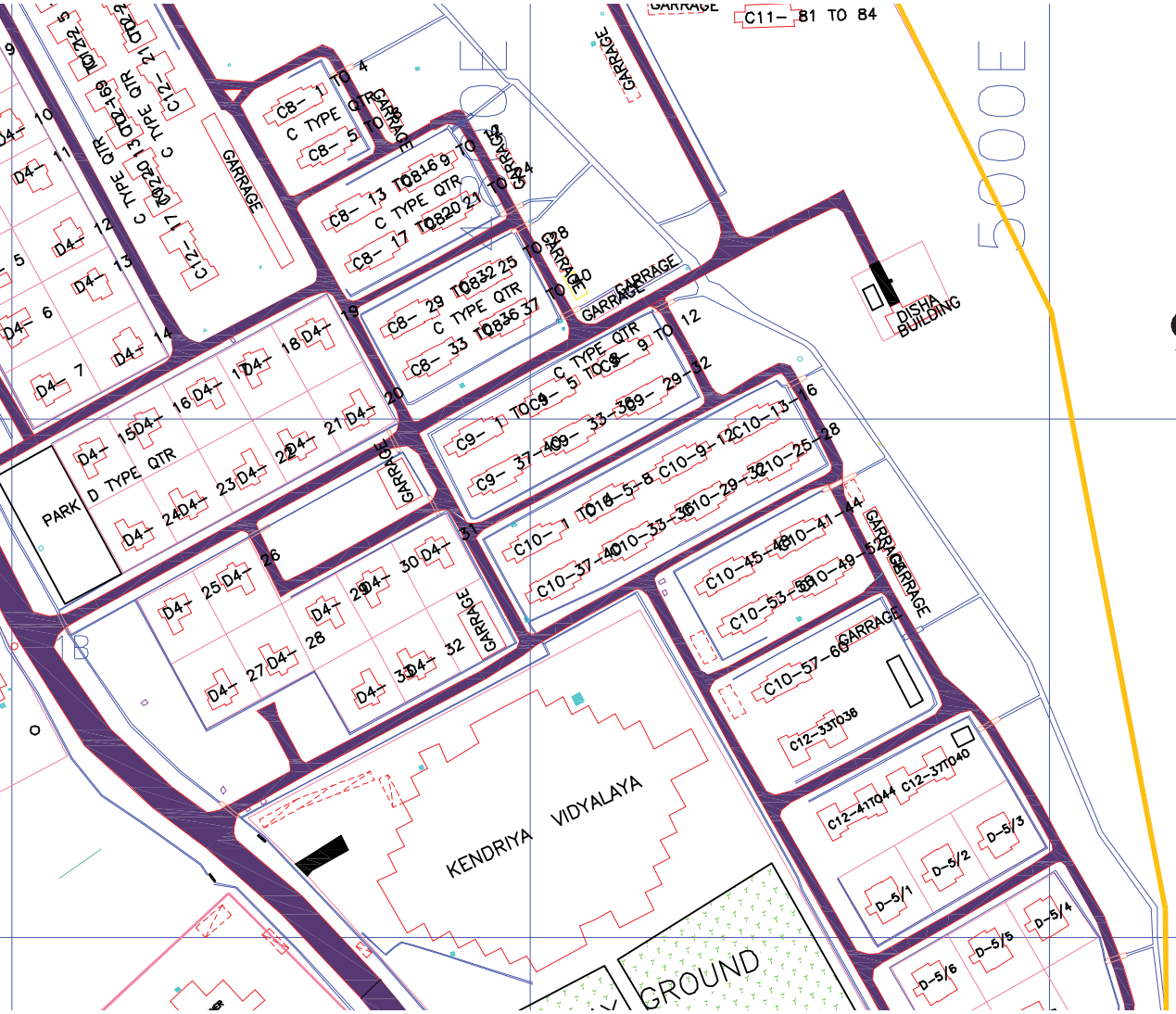

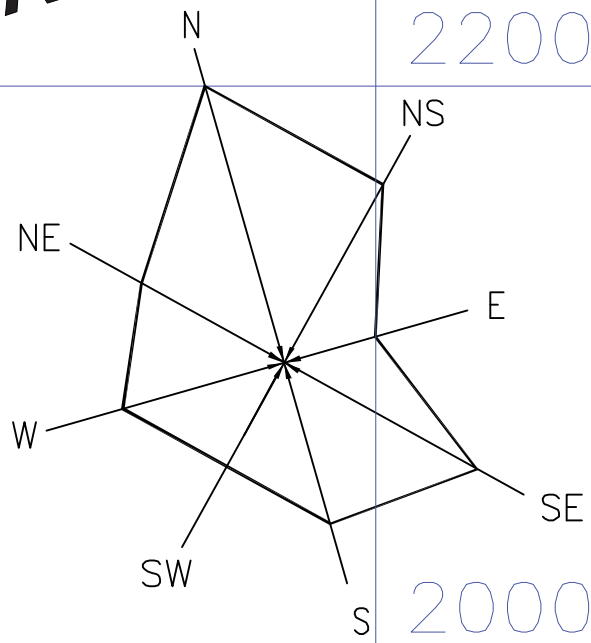

WINDROSE