FIRST ANGLE PROJECTION ( ALL DIMENSIONS ARE IN MM. )

DRAWING No. TB-385-510-001

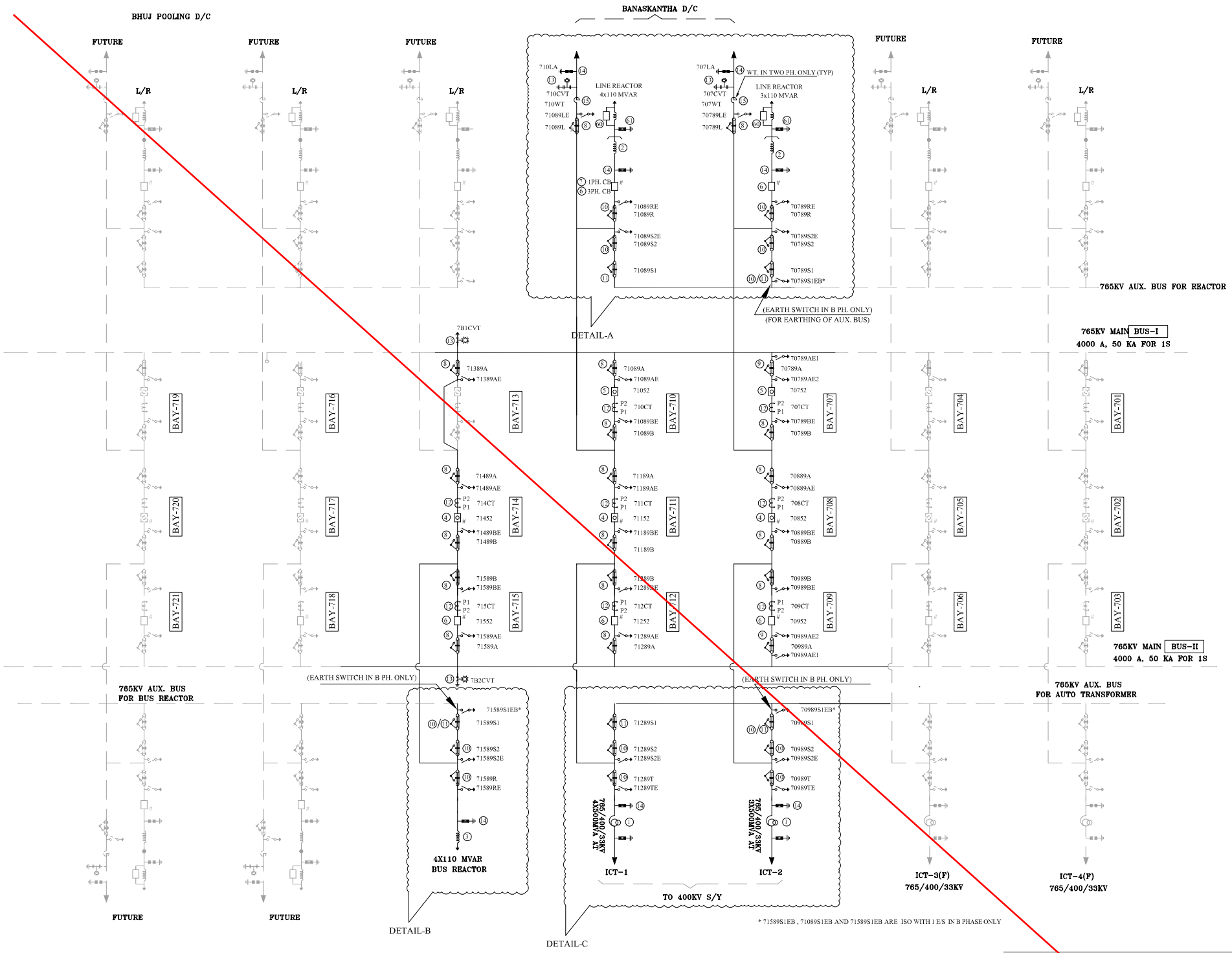


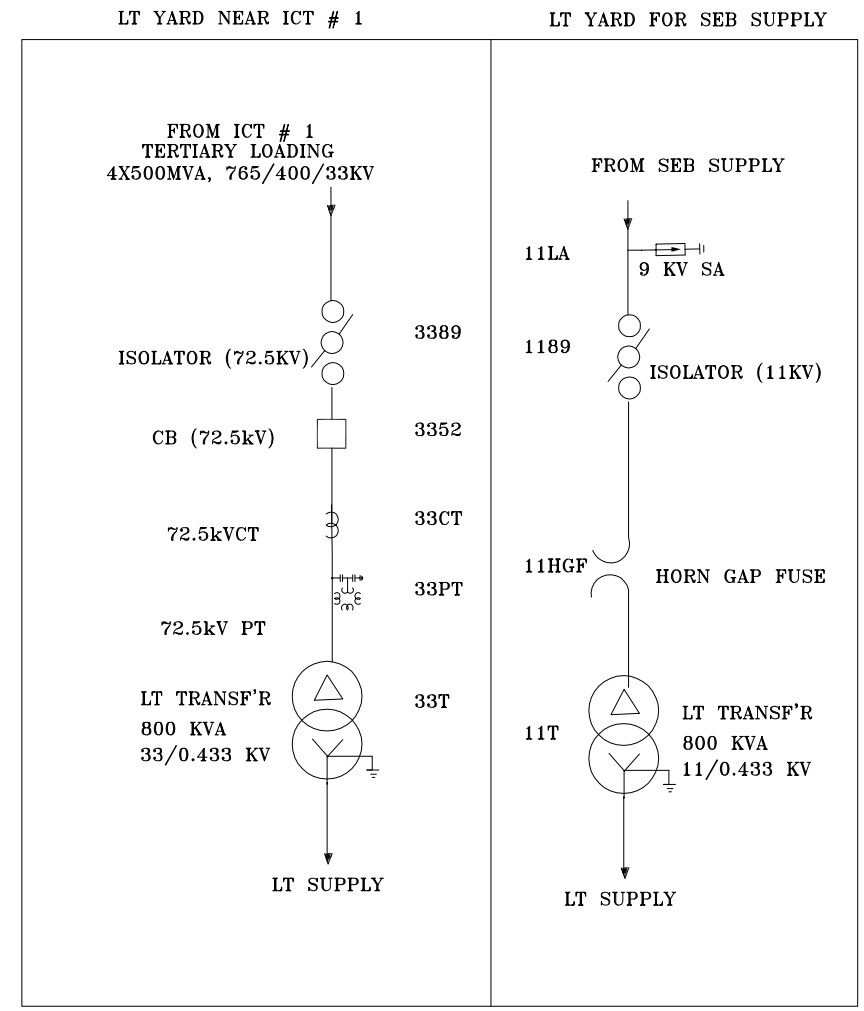


765KV SINGLE LINE DIAGRAM

NOA NO. : CC-CS/484-WR2/SS-2953/11/G8/NOA-1&2/5727 & 5728 DT. 31.03.16

ADDITIONAL INFORMATION
W.O.No. 85003

STATUS OF DRAWING CONTRACT

DISTRIBUTION OF PRINTS

ग्राहक/परियोजना का नाम POWER GRID CORPORATION OF INDIA LIMITED
NAME OF CUSTOMER/PROJECT
SUBSTATION PACKAGE-SS01 FOR CONSTRUCTION OF 765/400/220KV BHUJ S/S & EXT. OF 765KV BANASKANTHA S/S UNDER GREEN ENERGY CORRIDOR ISTS PART- C (PART-1)

भारत हेवी इलेक्ट्रिकल्स लिमिटेड
ट्रांसमिशन परियोजना विभाग
BHARAT HEAVY ELECTRICALS LTD.
TRANSMISSION PROJECTS DIVISION

| | नाम /NAME | हस्ता./SIGN. | दि./DATE |
|---|---|---|---|
| बनाया DRAWN | JS | | 06.04.16 |
| जाँचा CHECKED | SK/AA | | |
| स्वीकृत APPROVED | AS/RS | | |

| REV. | DATE | |
|---|---|---|
| | 30.01.17 | ALTERED / CHECKED / APPROVED |

ZONE REVISED AS PER COMMENT

विभाग DEPT. TBEM
कोड CODE 422
अनुपात / SCALE NTS
कार्ड कोड CARD CODE

शीर्षक/TITLE
SINGLE LINE DIAGRAM
FOR 765/400/220kV BHUJ S/S.

ड्राईंग क्र./DRAWING NO. TB-385-510-001
पुनः/REV. 1
पृष्ठ क्र./SHEET No. 01 अगला पृष्ठ/NEXT SHEET 02

COPY RIGHT AND CONFIDENTIAL
The information on this document is the property of BHARAT HEAVY ELECTRICALS LIMITED
it must not be used directly or indirectly in anyway detrimental to the interest of the company.

COMPUTER DRG. PATH NAME :
REF. DRG. No.
SIGN. & DATE
INVENTORY No.

FIRST ANGLE PROJECTION ( ALL DIMENSIONS ARE IN MM. )

DRAWING No. TB-385-510-001

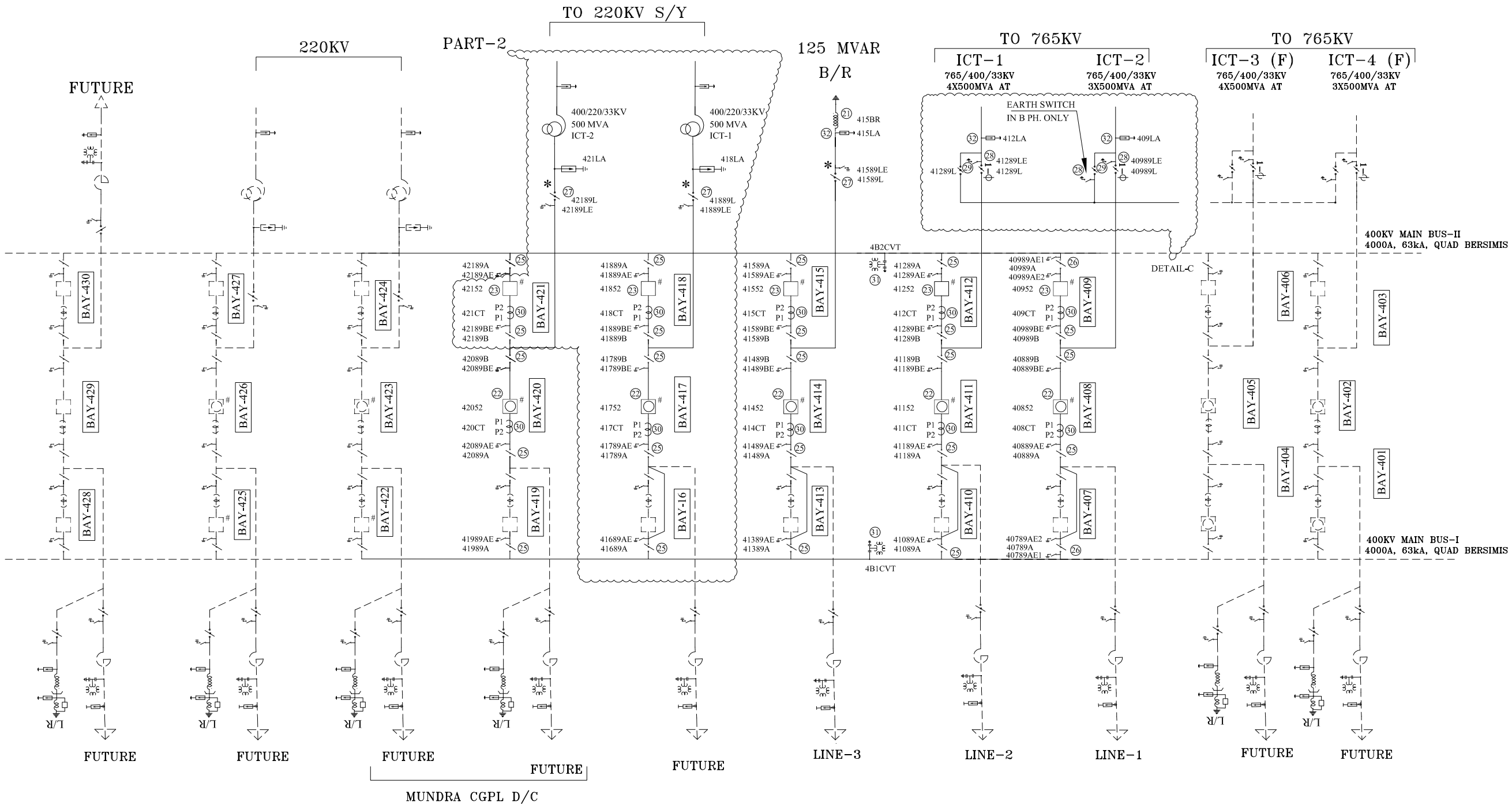


## 400KV SINGLE LINE DIAGRAM

NOA NO. : CC-CS/484-WR2/SS-2953/11/G8/NOA-1&2/5727 & 5728 DT. 31.03.16
CC-CS/484-WR2/SS-2953/11/G8/NOA-I & II/7130 & 7131 DT 27 Dec 2016 [PART-2]

ADDITIONAL INFORMATION
W.O.No. 85003

STATUS OF DRAWING CONTRACT

DISTRIBUTION OF PRINTS

ग्राहक/परियोजना का नाम
NAME OF CUSTOMER/PROJECT
POWER GRID CORPORATION OF INDIA LIMITED
SUBSTATION PACKAGE-SS01 FOR CONSTRUCTION OF 765/400/220KV BHUJ S/S & EXT. OF 765KV BANASKANTHA S/S UNDER GREEN ENERGY CORRIDOR ISTS PART-C (PART-1) & (PART-2)

भारत हेवी इलेक्ट्रिकल्स लिमिटेड
ट्रांसमिशन परियोजना विभाग
BHARAT HEAVY ELECTRICALS LTD.
TRANSMISSION PROJECTS DIVISION

| | नाम /NAME | हस्ता./SIGN. | दि./DATE |
|---|---|---|---|
| बनाया DRAWN | JS | | 06.04.16 |
| जाँचा CHECKED | SK/AA | | |
| स्वीकृत APPROVED | AS/RS | | |

| REV. | DATE | ALTERED / CHECKED / APPROVED |
|---|---|---|
| 01 | 30.01.17 | |

ZONE PART-2 ADDED

विभाग DEPT. TBEM
कोड CODE 422
अनुपात / SCALE NTS
कार्ड कोड CARD CODE

शीर्षक/TITLE
SINGLE LINE DIAGRAM
FOR 765/400/220kV BHUJ S/S.

ड्राईंग क्र./DRAWING NO. TB-385-510-001
पुनः/REV. 01
पृष्ठ क्र./SHEET No. 02
अगला पृष्ठ/NEXT SHEET 03

COPY RIGHT AND CONFIDENTIAL
The information on this document is the property of BHARAT HEAVY ELECTRICALS LIMITED it must not be used directly or indirectly in anyway detrimental to the interest of the company.

COMPUTER DRG. PATH NAME :
REF. DRG. No.
SIGN. & DATE
INVENTORY No.

FIRST ANGLE PROJECTION ( ALL DIMENSIONS ARE IN MM. )

DRAWING No. TB-385-510-001

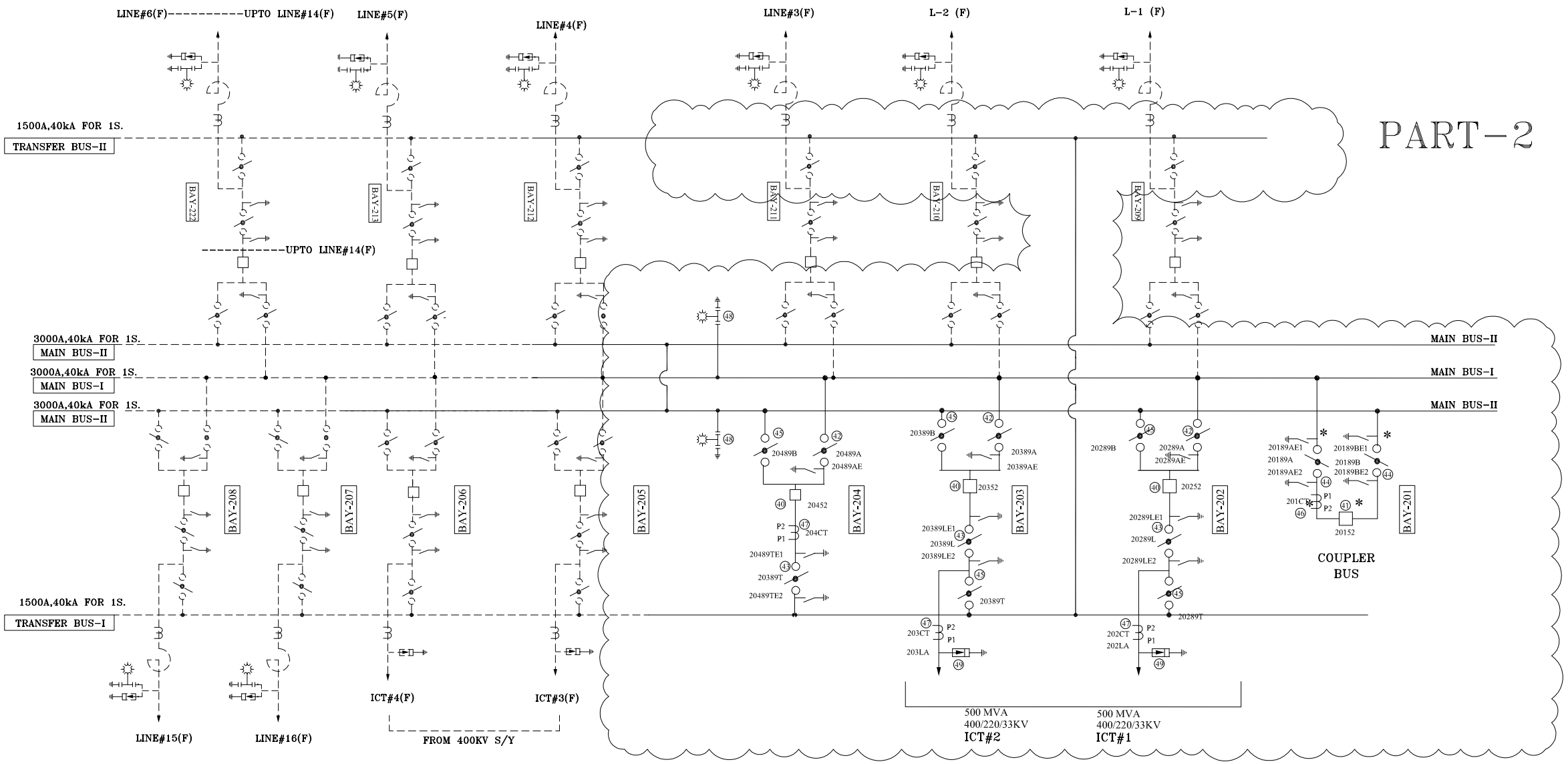


# 220KV SINGLE LINE DIAGRAM

NOA NO. : CC-CS/484-WR2/SS-2953/11/G8/NOA-1&2/5727 & 5728 DT. 31.03.16
CC-CS/484-WR2/SS-2953/11/G8/NOA-I & II/7130 & 7131 DT 27 Dec 2016 [PART-2]

ADDITIONAL INFORMATION
W.O.No. 85003

STATUS OF DRAWING CONTRACT

DISTRIBUTION OF PRINTS

ग्राहक/परियोजना का नाम NAME OF CUSTOMER/PROJECT: POWER GRID CORPORATION OF INDIA LIMITED
SUBSTATION PACKAGE-SS01 FOR CONSTRUCTION OF 765/400/220KV BHUJ S/S & EXT. OF 765KV BANASKANTHA S/S UNDER GREEN ENERGY CORRIDOR ISTS PART- C (PART-1) & (PART-2)

बीएचईएल BHEL
भारत हेवी इलेक्ट्रिकल्स लिमिटेड
ट्रांसमिशन परियोजना विभाग
BHARAT HEAVY ELECTRICALS LTD.
TRANSMISSION PROJECTS DIVISION

| | नाम /NAME | हस्ता./SIGN. | दि./DATE |
|---|---|---|---|
| बनाया DRAWN | JS | | 06.04.16 |
| जाँचा CHECKED | SK/AA | | |
| स्वीकृत APPROVED | AS/RS | | |

| REV. | DATE | |
|---|---|---|
| 01 | 30.01.17 | ALTERED / CHECKED / APPROVED |

ZONE: PART-2 ADDED

विभाग DEPT. TBEM
कोड CODE 422
अनुपात / SCALE NTS
कार्ड कोड CARD CODE

शीर्षक/TITLE: SINGLE LINE DIAGRAM FOR 765/400/220kV BHUJ S/S.

ड्राईंग क्र./DRAWING NO. TB-385-510-001
पुनः/REV. 1
पृष्ठ क्र./SHEET No. 03
अगला पृष्ठ/NEXT SHEET 04

COPY RIGHT AND CONFIDENTIAL
The information on this document is the property of BHARAT HEAVY ELECTRICALS LIMITED
it must not be used directly or indirectly in anyway detrimental to the interest of the company.

COMPUTER DRG. PATH NAME :
REF. DRG. No.
SIGN. & DATE
INVENTORY No.

FIRST ANGLE PROJECTION ( ALL DIMENSIONS ARE IN MM. )

DRAWING No. TB-385-510-001

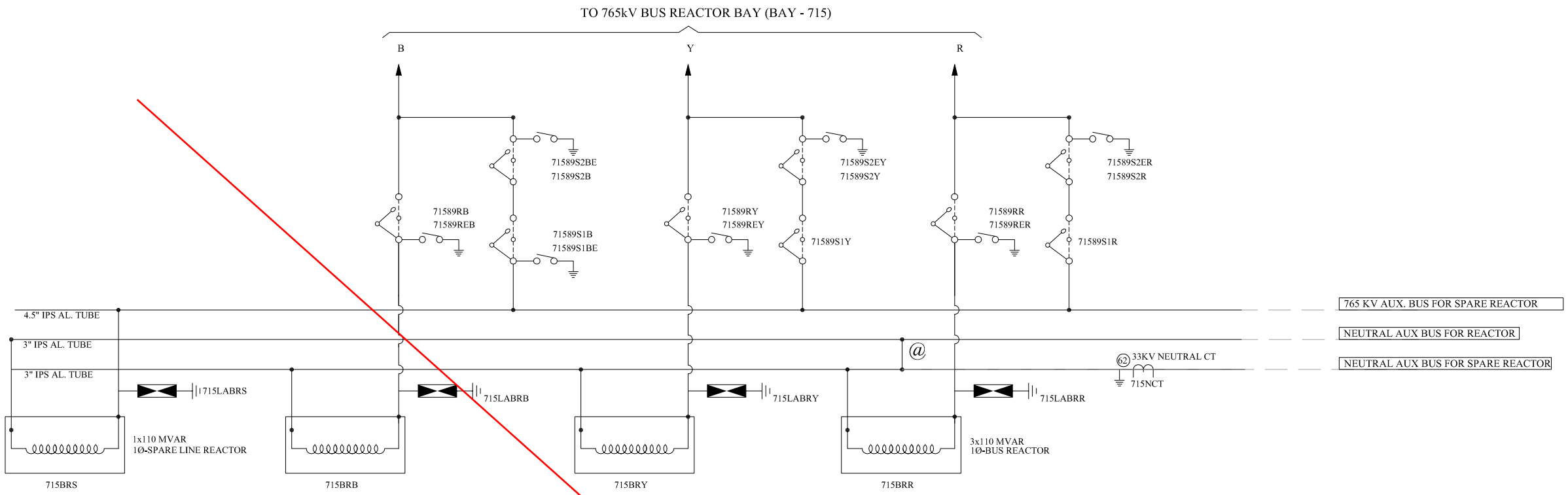


DETAIL-B

(ARRANGEMENT OF 765kV BUS REACTOR AND AUX. BUS.)

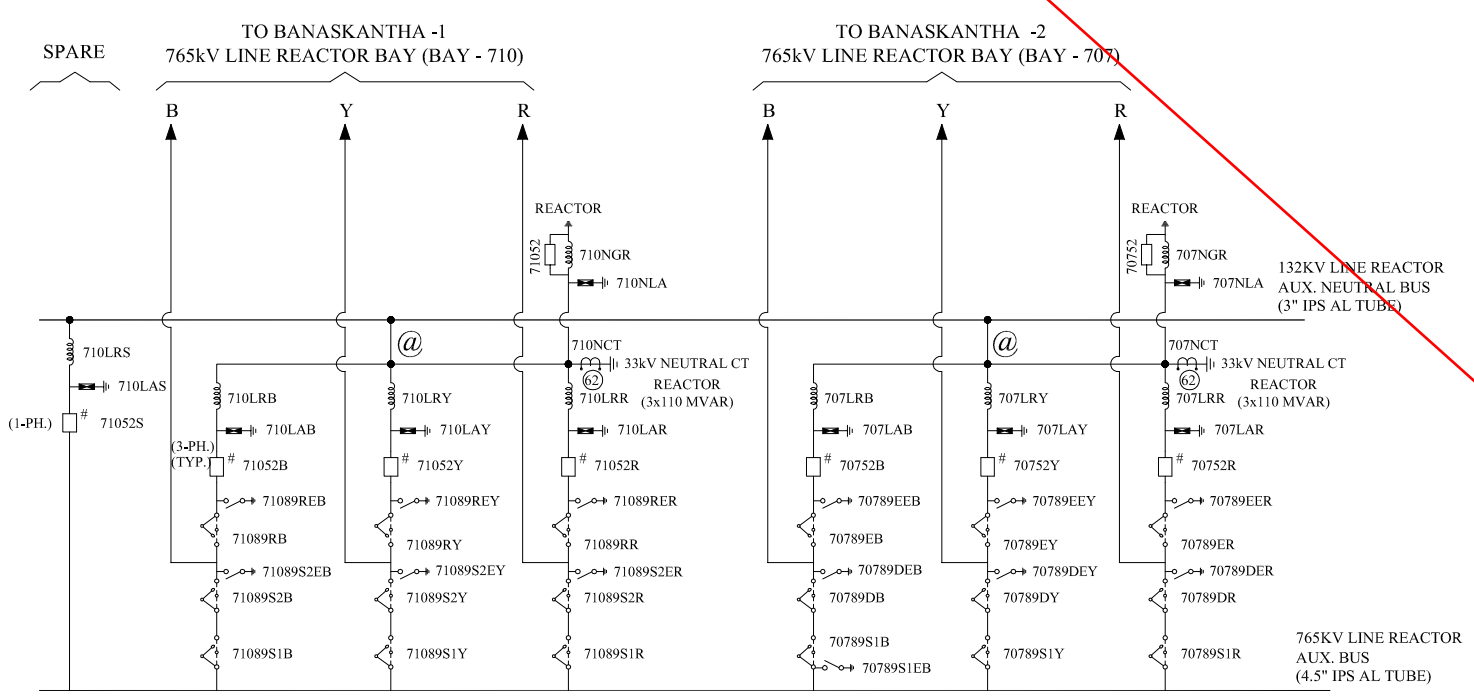


DETAIL-A

(ARRANGEMENT OF 765kV LINE REACTOR AND AUX. BUS.)

NOA NO. : CC-CS/484-WR2/SS-2953/11/G8/NOA-1&2/5727 & 5728 DT. 31.03.16

ADDITIONAL INFORMATION
W.O.No. 85003

STATUS OF DRAWING CONTRACT

DISTRIBUTION OF PRINTS

ग्राहक/परियोजना का नाम
NAME OF CUSTOMER/PROJECT
POWER GRID CORPORATION OF INDIA LIMITED
SUBSTATION PACKAGE-SS01 FOR CONSTRUCTION OF 765/400/220KV BHUJ S/S & EXT. OF 765KV BANASKANTHA S/S UNDER GREEN ENERGY CORRIDOR ISTS PART-C (PART-1)

भारत हेवी इलेक्ट्रिकल्स लिमिटेड
ट्रांसमिशन परियोजना विभाग
BHARAT HEAVY ELECTRICALS LTD.
TRANSMISSION PROJECTS DIVISION

| | नाम /NAME | हस्ता./SIGN. | दि./DATE |
|---|---|---|---|
| बनाया DRAWN | JS | | 06.04.16 |
| जाँचा CHECKED | SK/AA | | |
| स्वीकृत APPROVED | AS/RS | | |

| REV. | DATE | |
|---|---|---|
| | | ALTERED |
| | | CHECKED |
| | | APPROVED |

ZONE

विभाग DEPT. TBEM
कोड CODE 422
अनुपात / SCALE NTS
कार्ड कोड CARD CODE

शीर्षक/TITLE
SINGLE LINE DIAGRAM
FOR 765/400/220kV BHUJ S/S.

ड्राईंग क्र./DRAWING NO. TB-385-510-001
पुनः/REV. 0
पृष्ठ क्र./SHEET No. 04
अगला पृष्ठ/NEXT SHEET 05

COPY RIGHT AND CONFIDENTIAL
The information on this document is the property of BHARAT HEAVY ELECTRICALS LIMITED
it must not be used directly or indirectly in anyway detrimental to the interest of the company.

COMPUTER DRG. PATH NAME :
REF. DRG. No.
SIGN. & DATE
INVENTORY No.

FIRST ANGLE PROJECTION ( ALL DIMENSIONS ARE IN MM. )

DRAWING No. TB-385-510-001

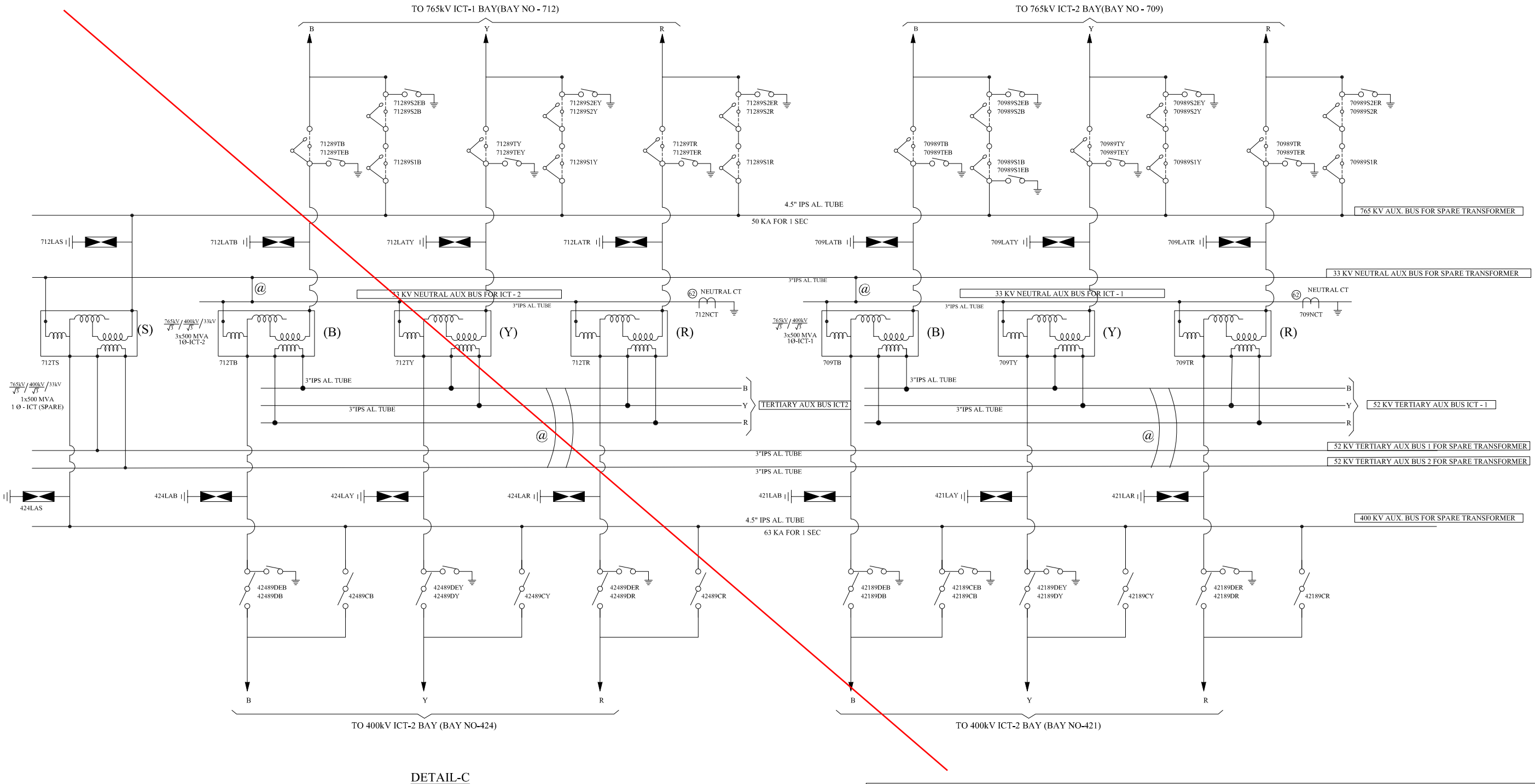


DETAIL-C

(ARRANGEMENT OF 765/400kV ICT AND AUX. BUS.)

NOA NO. : CC-CS/484-WR2/SS-2953/11/G8/NOA-1&2/5727 & 5728 DT. 31.03.16

ADDITIONAL INFORMATION
W.O.No. 85003

STATUS OF DRAWING CONTRACT

DISTRIBUTION OF PRINTS

ग्राहक/परियोजना का नाम
NAME OF CUSTOMER/PROJECT

POWER GRID CORPORATION OF INDIA LIMITED

SUBSTATION PACKAGE-SS01 FOR CONSTRUCTION OF 765/400/220KV BHUJ S/S & EXT. OF 765KV BANASKANTHA S/S UNDER GREEN ENERGY CORRIDOR ISTS PART- C (PART-1)

भारत हेवी इलेक्ट्रिकल्स लिमिटेड
ट्रांसमिशन परियोजना विभाग
BHARAT HEAVY ELECTRICALS LTD.
TRANSMISSION PROJECTS DIVISION

| | नाम /NAME | हस्ता./SIGN. | दि./DATE |
|---|---|---|---|
| बनाया DRAWN | JS | | 23.11.15 |
| जाँचा CHECKED | SK/AA | | |
| स्वीकृत APPROVED | AS/RS | | |

| REV. | DATE | ALTERED / CHECKED / APPROVED |
|---|---|---|
| ZONE | | |

विभाग DEPT. TBEM
कोड CODE 422
अनुपात / SCALE NTS
कार्ड कोड CARD CODE

शीर्षक/TITLE
SINGLE LINE DIAGRAM
FOR 765/400/220kV BHUJ S/S.

ड्राईंग क्र./DRAWING NO. TB-385-510-001
पुनः/REV. 0
पृष्ठ क्र./SHEET No. 05
अगला पृष्ठ/NEXT SHEET 06

COPY RIGHT AND CONFIDENTIAL
The information on this document is the property of BHARAT HEAVY ELECTRICALS LIMITED
it must not be used directly or indirectly in anyway detrimental to the interest of the company.

COMPUTER DRG. PATH NAME :
REF. DRG. No.
SIGN. & DATE
INVENTORY No.

FIRST ANGLE PROJECTION ( ALL DIMENSIONS ARE IN MM. )

DRAWING No. TB-385-510-001

COPY RIGHT AND CONFIDENTIAL
The information on this document is the property of BHARAT HEAVY ELECTRICALS LIMITED
it must not be used directly or indirectly in anyway detrimental to the interest of the company.

COMPUTER DRG. PATH NAME :

REF. DRG. No.

SIGN. & DATE

INVENTORY No.

## BILL OF QTY. FOR 765kV MAIN EQUIPMENTS (50KA, 1 SEC):

| SL.NO. | DESCRIPTION | RATING | QTY. (NO.)(PART-1) | SYMBOL | SCOPE OF SUPPLY | LEGEND |
|---|---|---|---|---|---|---|
| 1 | 500 MVA, (1-PH) AUTOTRANSFORMER | 765/400/33KV | 7 | | PGCIL | T |
| 2 | 110MVAR LINE REACTOR (1-PH) WITH NGR(550 Ohm). | 765KV | 7 | | PGCIL | LR/NGR |
| 3 | 110MVAR BUS REACTOR (1-PH) | 765KV | 4 | | PGCIL | BR |
| 4 | SF6 CIRCUIT BREAKER WITH CR, WITH CSD (3-PH) | 3150A | 3 | # | PGCIL | 52 |
| 5 | SF6 CIRCUIT BREAKER WITH CR,WITHOUT CSD (3-PH) | 3150A | 2 | | PGCIL | 52 |
| 6 | SF6 CIRCUIT BREAKER WITHOUT CR,WITH CSD (3-PH) | 3150A | 5 | # | PGCIL | 52 |
| 7 | SF6 CIRCUIT BREAKER WITHOUT CR,WITH CSD (1-PH) | 3150A | 1 | # | PGCIL | 52 |
| 8 | ISOLATOR WITH ONE E/SW (3 PH) VERTICAL KNEE TYPE | 3150A | 17 | | BHEL | 89/89E |
| 9 | ISOLATOR WITH TWO E/SW (3 PH) VERTICAL KNEE TYPE | 3150A | 2 | | BHEL | 89/89E1 /89E2 |
| 10 | ISOLATOR WITH ONE E/SW (1 PH) VERTICAL KNEE TYPE | 2000A | 33 | | BHEL | 89/89E1 |
| 11 | ISOLATOR WITHOUT E/SW (1 PH.) VERTICAL KNEE TYPE | 2000A | 12 | | BHEL | 89 |
| 12 | CURRENT TRANSFORMER (1 PH.) WITH 120% EXTENDED CURRENT RATING. | 3000A | 24 | | BHEL | CT |
| 13 | CVT (1 PH.) | 8800pF | 12 | | BHEL | CVT |
| 14 | SURGE ARRESTER (1 PH.) | 624 kV | 24 | | BHEL | LA |
| 15 | WAVE TRAP (1 PH.) PEDESTAL TYPE. | 1mH, 3150A | 04 | | BHEL | WT |

## BILL OF QTY. FOR 220kV MAIN EQUIPMENTS:

| SL.NO. | DESCRIPTION | RATING | QTY. (PART-2) (NO.) | SYMBOL | SCOPE OF SUPPLY | LEGEND |
|---|---|---|---|---|---|---|
| 40 | SF6 CIRCUIT BREAKER (3-PH) | 1600A | 3 | | BHEL | 52 |
| 41 | SF6 CIRCUIT BREAKER (3-PH) | 2500A | 1 | * | BHEL | 52 |
| 42 | ISOLATOR WITH ONE E/SW (3 PH) DOUBLE BREAK TYPE | 1600A | 3 | | BHEL | 89/89E |
| 43 | ISOLATOR WITH TWO E/SW (3 PH) DOUBLE BREAK TYPE | 1600A | 3 | | BHEL | 89/89E1 /89E2 |
| 44 | ISOLATOR WITH TWO E/SW (3 PH) DOUBLE BREAK TYPE | 2500A | 2 | * | BHEL | 89/89E1 |
| 45 | TANDEM ISOLATOR WITHOUT E/SW(3PH)DOUBLE BREAK TYPE | 1600A | 5 | | BHEL | 89 |
| 46 | CURRENT TRANSFORMER (1 PH.) WITH 150% EXTENDED CURRENT RATING. | 1600A | 3 | * | BHEL | CT* |
| 47 | CURRENT TRANSFORMER (1 PH.) WITH 120% EXTENDED CURRENT RATING. | 1600A | 9 | | BHEL | CT |
| 48 | CVT (1 PH.) | 4400pF | 6 | | BHEL | CVT |
| 49 | SURGE ARRESTER (1 PH.) | 216 kV | 6 | | BHEL | LA |

## BILL OF QTY. FOR 400kV MAIN EQUIPMENTS (63KA, 1SEC):

| SL.NO. | DESCRIPTION | RATING | QTY. (PART-1) (NO.) | QTY. (PART-2) (NO.) | SYMBOL | SCOPE OF SUPPLY | LEGEND |
|---|---|---|---|---|---|---|---|
| 20 | 500MVA, (3-PH) AUTOTRANSFORMER. | 400/220/33KV | 0 | 2 | | BHEL | T |
| 21 | 125MVAR BUS REACTOR (3-PH) | 420 kV | 1 | 0 | | BHEL | BR |
| 22 | SF6 CIRCUIT BREAKER WITH CR, WITH CSD (3-PH) | 3150A | 4 | 1 | # | BHEL | 52 |
| 23 | SF6 CIRCUIT BREAKER WITHOUT CR,WITH CSD (3-PH) | 3150A | 3 | 2 | # | BHEL | 52 |
| 24 | SF6 CIRCUIT BREAKER WITHOUT CR,WITHOUT CSD (3-PH) | 3150A | 0 | 0 | | BHEL | 52 |
| 25 | ISOLATOR WITH ONE E/SW (3 PH) DOUBLE BREAK TYPE | 3150A | 17 | 6 | | BHEL | 89/89E |
| 26 | ISOLATOR WITH TWO E/SW (3 PH) DOUBLE BREAK TYPE | 3150A | 2 | 0 | | BHEL | 89/89E1 /89E2 |
| 27 | ISOLATOR WITH ONE E/SW (3 PH) DOUBLE BREAK TYPE | 2000A | 1 | 2 | * | BHEL | 89/89E1 |
| 28 | ISOLATOR WITH ONE E/SW (1 PH) DOUBLE BREAK TYPE | 3150A | 7 | 0 | | BHEL | 89/89E1 |
| 29 | ISOLATOR WITHOUT E/SW (1 PH) DOUBLE BREAK TYPE | 3150A | 5 | 0 | | BHEL | 89 |
| 30 | CURRENT TRANSFORMER (1 PH.) WITH 120% EXTENDED CURRENT RATING. | 3000A | 21 | 09 | | BHEL | CT |
| 31 | CVT (1 PH.) | 4400pF | 6 | 0 | | BHEL | CVT |
| 32 | SURGE ARRESTER (1 PH.) | 336 kV | 10 | 6 | | BHEL | LA |
| 33 | WAVE TRAP (1 PH.) PEDESTAL TYPE. | 0.5mH, 2000A | 0 | 0 | | BHEL | WT |

## BILL OF QTY. FOR 145 & 33kV MAIN EQUIPMENTS:

| SL.NO. | DESCRIPTION | RATING | QTY. (NO.) (PART1) | SYMBOL | SCOPE OF SUPPLY | LEGEND |
|---|---|---|---|---|---|---|
| 60 | SF6 CIRCUIT BREAKER FOR NGR BYPASS (1-PH) | 145 KV, 1250A | 2 | | BHEL | 52 |
| 61 | SURGE ARRESTER (1 PH.) | 120 kV, 10 KA 5 KJ/KV | 2 | | PGCIL | LA |
| 62 | NEUTRAL CT. (1 PH.) WITH 120% EXTENDED CURRENT RATING. | 33KV | 5 | | PGCIL | CT |

NOA NO. : CC-CS/484-WR2/SS-2953/11/G8/NOA-1&2/5727 & 5728 DT. 31.03.16
CC-CS/484-WR2/SS-2953/11/G8/NOA-I & II/7130 & 7131 DT 27 Dec 2016 [PART-2]

ADDITIONAL INFORMATION
W.O.No. 85003

STATUS OF DRAWING

DISTRIBUTION OF PRINTS

ग्राहक/परियोजना का नाम
NAME OF CUSTOMER/PROJECT: POWER GRID CORPORATION OF INDIA LIMITED
SUBSTATION PACKAGE-SS01 FOR CONSTRUCTION OF 765/400/220KV BHUJ S/S & EXT. OF 765KV BANASKANTHA S/S UNDER GREEN ENERGY CORRIDOR ISTS PART-C (PART-1) & (PART-2)

भारत हेवी इलेक्ट्रिकल्स लिमिटेड
ट्रांसमिशन परियोजना विभाग
BHARAT HEAVY ELECTRICALS LTD.
TRANSMISSION PROJECTS DIVISION

| | नाम /NAME | हस्ता./SIGN. | दि./DATE |
|---|---|---|---|
| बनाया DRAWN | JS | | 23.11.15 |
| जाँचा CHECKED | SK/AA | | |
| स्वीकृत APPROVED | AS/RS | | |

| REV. | DATE | |
|---|---|---|
| 01 | 30.01.17 | ALTERED / CHECKED / APPROVED |
| ZONE | REVISED AS PER COMMENT PART-2 ADDED | |

विभाग DEPT. TBEM
कोड CODE 422
अनुपात / SCALE NTS
कार्ड कोड CARD CODE

शीर्षक/TITLE
SINGLE LINE DIAGRAM
FOR 765/400/220kV BHUJ S/S.

ड्राईंग क्र./DRAWING NO. TB-385-510-001
पुनः/REV. 01
पृष्ठ क्र./SHEET No. 06 अगला पृष्ठ/NEXT SHEET 07

FIRST ANGLE PROJECTION ( ALL DIMENSIONS ARE IN MM. )

DRAWING No. TB-385-510-001

COPY RIGHT AND CONFIDENTIAL
The information on this document is the property of BHARAT HEAVY ELECTRICALS LIMITED
it must not be used directly or indirectly in anyway detrimental to the interest of the company.

## SYSTEM PARAMETERS

| DESCRIPTION | 765 kV | 400 kV | 220 kV | 132 kV | 66 kV | 11 kV |
|---|---|---|---|---|---|---|
| 1) HIGHEST SYSTEM VOLTAGE | 800kV (r.m.s.) | 420kV (r.m.s.) | 245kV (r.m.s.) | 145kV (r.m.s.) | 72.5kV (r.m.s.) | 12kV (r.m.s.) |
| 2) SYSTEM OPERATING VOLTAGE | 765kV | 400kV | 220kV | 132KV | 66kV | 11kV |
| 3) P.F. WITHSTAND VOLTAGE | 830kV (r.m.s.) | 630kV (r.m.s.) | 460kV (r.m.s.) dry and wet | 275kV (r.m.s.) dry and wet | 140kV (r.m.s.) dry and wet | 28kV (r.m.s.) dry and wet |
| 4) LIGHTING IMPULSE WITHSTAND VOLTAGE | 2100 kVP | 1550 kVP | 1050 kVP | 650 kVP | 325 kVP | 75 kVP |
| 5) SWITCHING IMPULSE WITHSTAND VOLTAGE | 1550 kVP | 1050 kVP | -- | -- | -- | -- |
| 6) SYSTEM FAULT LEVEL | 50KA FOR 1 Sec. | 63KA FOR 1 Sec. | 40KA FOR 1 Sec. | 31.5KA FOR 1 Sec. | 31.5KA FOR 1 Sec. | 25KA FOR 1 Sec. |
| 7) CREEPAGE | 31 MM/KV | 31 MM/KV | 31 MM/KV | 31 MM/KV | 31 MM/KV | 31 MM/KV |
| 8) SYSTEM EARTHING | EFFECTIVELY | EFFECTIVELY | EFFECTIVELY | EFFECTIVELY | EFFECTIVELY | EFFECTIVELY |

**800kV 3000A CT**

| Core No. | Current Ratio | Accuracy Class | Output Burden VA | Min KPV (Vk) | Max ICT in Ohms | Max Imag at KPV (mA) | Purpose |
|---|---|---|---|---|---|---|---|
| [illegible] | [illegible] | [illegible] | | [illegible] | [illegible] | [illegible] | [illegible] |
| [illegible] | [illegible] | [illegible] | - | [illegible] | [illegible] | [illegible] | [illegible] |
| [illegible] | [illegible] | [illegible] | [illegible] | | | | [illegible] |
| [illegible] | [illegible] | [illegible] | [illegible] | - | - | - | [illegible] |
| [illegible] | [illegible] | [illegible] | [illegible] | [illegible] | [illegible] | [illegible] | [illegible] |
| [illegible] | [illegible] | [illegible] | - | [illegible] | [illegible] | [illegible] | [illegible] |

All protection class shall be accuracy class TPS as per IEC 60044-6. Metering cores shall be accuracy class 0.2S as per IEC: 60044-1

**800kV CVT:**

| [illegible] | [illegible] |
|---|---|
| [illegible] | [illegible] |
| [illegible] | [illegible] |
| [illegible] | [illegible] |

Rated Voltage Factor: 1.2 Continuous
1.5 for 30 Seconds

**400kV CVT:**

| [illegible] | [illegible] |
|---|---|
| [illegible] | [illegible] |
| [illegible] | [illegible] |

Rated Voltage Factor: 1.2 Continuous
1.5 for 30 Seconds

**400kV 3000A CT**

| Core No. | Current Ratio | Accuracy Class | Output Burden VA | Min KPV (Vk) | Max ICT in Ohms | Max Imag at KPV (mA) | Purpose |
|---|---|---|---|---|---|---|---|
| 1 | [illegible] | TPS | | [illegible] | [illegible] | [illegible] | [illegible] |
| 2 | [illegible] | TPS | - | [illegible] | [illegible] | [illegible] | [illegible] |
| [illegible] | [illegible] | [illegible] | [illegible] | | | | [illegible] |
| [illegible] | [illegible] | [illegible] | [illegible] | - | - | - | [illegible] |
| [illegible] | [illegible] | TPS | - | [illegible] | [illegible] | [illegible] | [illegible] |
| [illegible] | [illegible] | TPS | | [illegible] | [illegible] | [illegible] | [illegible] |

All protection class shall be accuracy class TPS as per IEC 60044-6. Metering cores shall be accuracy class 0.2S as per IEC: 60044-1

| | |
|---|---|
| NOA NO. : | CC-CS/484-WR2/SS-2953/11/G8/NOA-1&2/5727 & 5728 DT. 31.03.16 |
| ADDITIONAL INFORMATION W.O.No. | ग्राहक/परियोजना का नाम / NAME OF CUSTOMER/PROJECT: POWER GRID CORPORATION OF INDIA LIMITED — SUBSTATION PACKAGE-SS01 FOR CONSTRUCTION OF 765/400/220KV BHUJ S/S & EXT. OF 765KV BANASKANTHA S/S UNDER GREEN ENERGY CORRIDOR ISTS PART-C (PART-1) |
| STATUS OF DRAWING | |
| DISTRIBUTION OF PRINTS | भारत हेवी इलेक्ट्रिकल्स लिमिटेड ट्रांसमिशन परियोजना विभाग — BHARAT HEAVY ELECTRICALS LTD. TRANSMISSION PROJECTS DIVISION |

| | नाम /NAME | हस्ता./SIGN. | दि./DATE |
|---|---|---|---|
| बनाया DRAWN | JS | | 23.11.15 |
| जाँचा CHECKED | SK/AA | | |
| स्वीकृत APPROVED | AS/RS | | |

| REV. | DATE | ALTERED / CHECKED / APPROVED |
|---|---|---|
| ZONE | | |

विभाग DEPT. TBEM; कोड CODE 422; अनुपात / SCALE NTS; कार्ड कोड CARD CODE

शीर्षक/TITLE: SINGLE LINE DIAGRAM FOR 765/400/220kV BHUJ S/S.

ड्राईंग क्र./DRAWING NO. TB-385-510-001; पुनः/REV. 0

पृष्ठ क्र./SHEET No. 07; अगला पृष्ठ/NEXT SHEET 08

COMPUTER DRG. PATH NAME :

REF. DRG. No.

SIGN. & DATE

INVENTORY No.

FIRST ANGLE PROJECTION ( ALL DIMENSIONS ARE IN MM. )

DRAWING No. TB-385-510-001

220kV , 1600A, CT

a) 120% Extended Rating applicable for ICT#1,#2 and Transfer Bus Bays

b) 150% Extended Rating applicable for Bus Coupler Bay

| Core No. | Current Ratio | Accuracy Class | Output Burden VA | Min kPV (Vk) | Max. RCT in Ohms | Max Im at kPV (mA) | Purpose |
|---|---|---|---|---|---|---|---|
| 1 | [illegible] | PS | - | [illegible] | [illegible] | 25mA at [illegible] 50mA at [illegible] | [illegible] |
| 2 | [illegible] | PS | - | [illegible] | [illegible] | 25mA at [illegible] 50mA at [illegible] | [illegible] |
| 3 | [illegible] | [illegible] | [illegible] | | | | [illegible] |
| [illegible] | [illegible] | PS | - | [illegible] | [illegible] | 25mA at [illegible] 50mA at [illegible] | [illegible] |
| [illegible] | [illegible] | PS | - | [illegible] | [illegible] | 25mA at [illegible] 50mA at [illegible] | [illegible] |

Accuracy class PS as per IS:2705

220kV CVT:

| [illegible] | [illegible] |
|---|---|
| [illegible] | [illegible] |
| [illegible] | [illegible] |
| | [illegible] |

Rated Voltage Factor: 1.2 Continuous
1.5 for 30 Seconds

72.5kV , 50A, CT

| Core No. | Current Ratio | Accuracy Class | Output Burden VA | Min kPV (Vk) | Max. RCT in Ohms | Max Im at kPV (mA) | Purpose |
|---|---|---|---|---|---|---|---|
| 1 | 50 | 5P10 | 10 | - | - | - | O/C & E/F |
| 2 | 50 | 0.5 | 10 | - | - | - | Metering |

72.5kV VT:

| [illegible] | [illegible] |
|---|---|
| [illegible] | [illegible] |
| [illegible] | [illegible] |

LEGENDS:-

PRESENT SCOPE

FUTURE/EXISTING SCOPE

NOTES:

1. @ : ELECTRICAL CONNECTION SHALL BE MADE MANUALLY DEPENDING UPON 765kV SIDE SWITCHING OF DIFFERENT FEEDERS OF AUTOTRANSFORMER/REACTOR.
2. SUPPLY, ERECTION, TESTING & COMMISSIONING INCLUDING FORMATION OF HV, LV, NEUTRAL, TERTIARY & AUXILIARY BUSES OF 3x500MVA, (765kV /√3) / (400kV /√3) / 33kV 1Ø AUTO TRANSFORMERS AND LINE/BUS REACTOR ARE NOT IN BHEL SCOPE.
3. 765kV WAVE TRAP SHALL BE PROVIDED IN TWO PHASE ONLY.

NOA NO. : CC-CS/484-WR2/SS-2953/11/G8/NOA-1&2/5727 & 5728 DT. 31.03.16
CC-CS/484-WR2/SS-2953/11/G8/NOA-I & II/7130 & 7131 DT 27 Dec 2016 [PART-2]

ADDITIONAL INFORMATION
W.O.No. 85003

STATUS OF DRAWING CONTRACT

DISTRIBUTION OF PRINTS

ग्राहक/परियोजना का नाम POWER GRID CORPORATION OF INDIA LIMITED

NAME OF CUSTOMER/PROJECT SUBSTATION PACKAGE-SS01 FOR CONSTRUCTION OF 765/400/220KV BHUJ S/S & EXT. OF 765KV BANASKANTHA S/S UNDER GREEN ENERGY CORRIDOR ISTS PART-C (PART-1) & (PART-2)

भारत हेवी इलेक्ट्रिकल्स लिमिटेड
ट्रांसमिशन परियोजना विभाग
BHARAT HEAVY ELECTRICALS LTD.
TRANSMISSION PROJECTS DIVISION

| | नाम /NAME | हस्ता./SIGN. | दि./DATE |
|---|---|---|---|
| बनाया DRAWN | JS | | 23.11.15 |
| जाँचा CHECKED | SK/AA | | |
| स्वीकृत APPROVED | AS/RS | | |

| REV. | DATE | ALTERED / CHECKED / APPROVED |
|---|---|---|
| 01 | 30.01.17 | |

ZONE 220KV (PART-2) ITEMS ADDED.

विभाग DEPT. TBEM
कोड CODE 422
अनुपात / SCALE NTS
कार्ड कोड CARD CODE

शीर्षक/TITLE
SINGLE LINE DIAGRAM
FOR 765/400/220kV BHUJ S/S.

ड्राईंग क्र./DRAWING NO. TB-385-510-001
पुनः/REV. 01
पृष्ठ क्र./SHEET No. 08
अगला पृष्ठ/NEXT SHEET –

COPYRIGHT AND CONFIDENTIAL
The information on this document is the property of BHARAT HEAVY ELECTRICALS LIMITED it must not be used directly or indirectly in anyway detrimental to the interest of the company.

COMPUTER DRG. PATH NAME :
REF. DRG. No.
SIGN. & DATE
INVENTORY No.