DRAWING NO. 3 679 02 00399

COPYRIGHT AND CONFIDENTIAL
The information on this document is the property of Bharat Heavy Electricals Limited.
It must not be used directly or indirectly in anyway detrimental to the interest of the Company

PART NO. (1) SLEEVE (CORRUGATED CARTON BOX) – 1 NO.

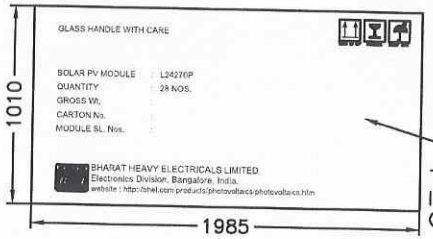

TEXT TO PRINTED IN BLUE COLOUR ON THIS SIDE

SLEEVE INNER DIMENSION

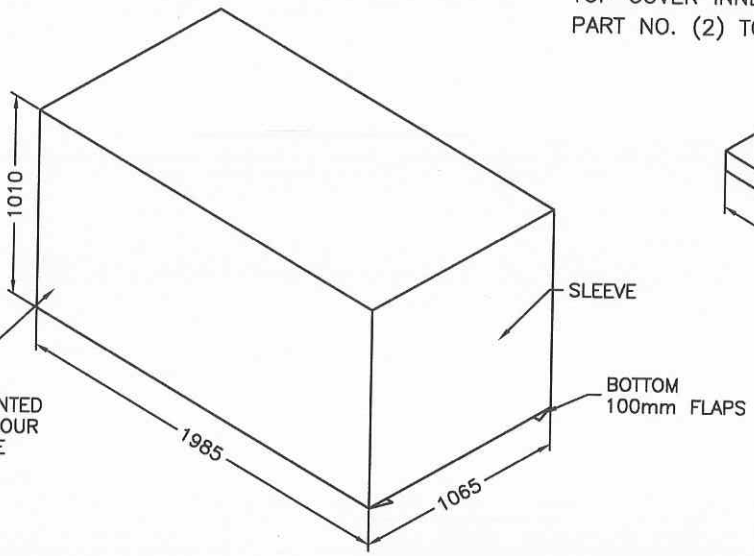

TOP COVER INNER DIMENSION
PART NO. (2) TOP COVER (CORRUGATED CARTON) – 1 NO.

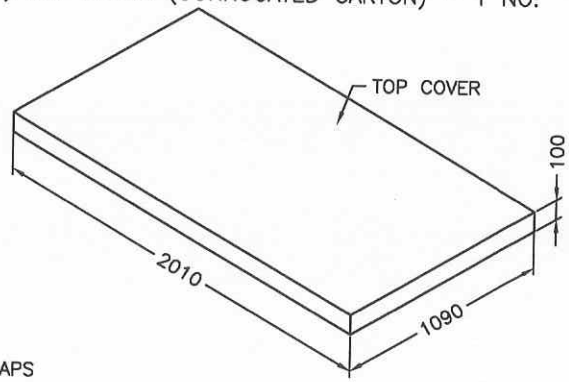

THE DIMENSIONS OF SLEEVE AND TOP COVER ARE INNER DIMENSIONS

PART NO. (3) PLYWOOD PALLET – 1 NO.

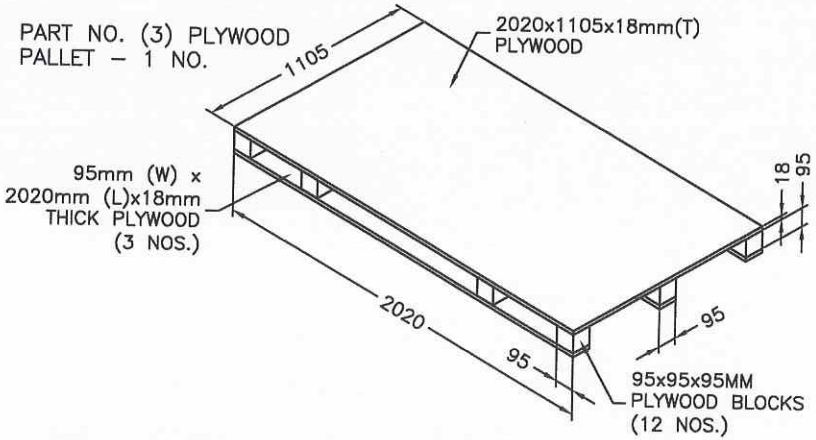

SPECIFICATIONS

	SLEEVE	TOP COVER
PAPER COMBINATION	: 469/200/180/200/180/200/469 GSM	300/180/200/180/200 GSM
PAPER COLOUR	: BROWN	BROWN
FLUTE TYPE	: AAA OR ACB	AC
NO OF PLY	: 7 PLY	5 PLY

NOTES :
1. ALL THE DIMENSIONS ARE IN MM.
2. FLUTE DIRECTION TO BE ALONG HEIGHT OF THE BOX.
3. SLEEVE & FLAP ARE TO BE FORMED FROM SAME CORRUGATED SHEET.
4. PLEASE SEE PAGE NO. 2 FOR INSTRUCTIONS FOR PACKING OF PV MODULES.

PART NO. (4) BOTTOM SHEET–1No OF 1975x1065mm, 5 PLY 250/180/180/180/250 GSM SHEET
PART NO. (5) MODULE CORNER CAP – 112 NOS. 150x150mm, THICKNESS 0.6 TO 1.0mm
PART NO. (6) RETAINER STRIP – 2 NOS. 1265x100mm, 3 PLY.

REV.	DATE	ALTERED / CHECKED / APPROVED	REV.	DATE	ALTERED / CHECKED / APPROVED	REV.	DATE	ALTERED / CHECKED / APPROVED
						00		FIRST ISSUE

TYPE OF PRODUCT OR NAME OF CUSTOMER/PROJECT

BHARAT HEAVY ELECTRICALS LIMITED.
ELECTRONICS DIVISION, BANGALORE

	NAME	SIGN.	DATE	No. OF VAR
DRN	SAN	Sd/–	290315	
CKD	SM	Sd/–	290315	
APPD	SR	Sd/–	290315	

DEPT.	FOR UNSPECIFIED–TOLERANCES	SCALE	WEIGHT(Kg)	REF. TO ASSY. DRG.	ITEM NO.	No. OF ITEM
SC&PV	REFER ED 0230499	NTS				
CODE 439						

TITLE
PACKING BOX FOR L24270P – 28 IN 1

DRAWING NO. 3 679 02 00399 REV. 00

SHEET NO. 01 NO. OF SHEETS 02

REF. DRG.NO. | SIGN & DATE | INVENTORY NO.

FORM No. A3–02