FIRST ANGLE PROJECTION

ALL DIMENSIONS ARE IN mm

DRAWING NO. 1 692 35 60023

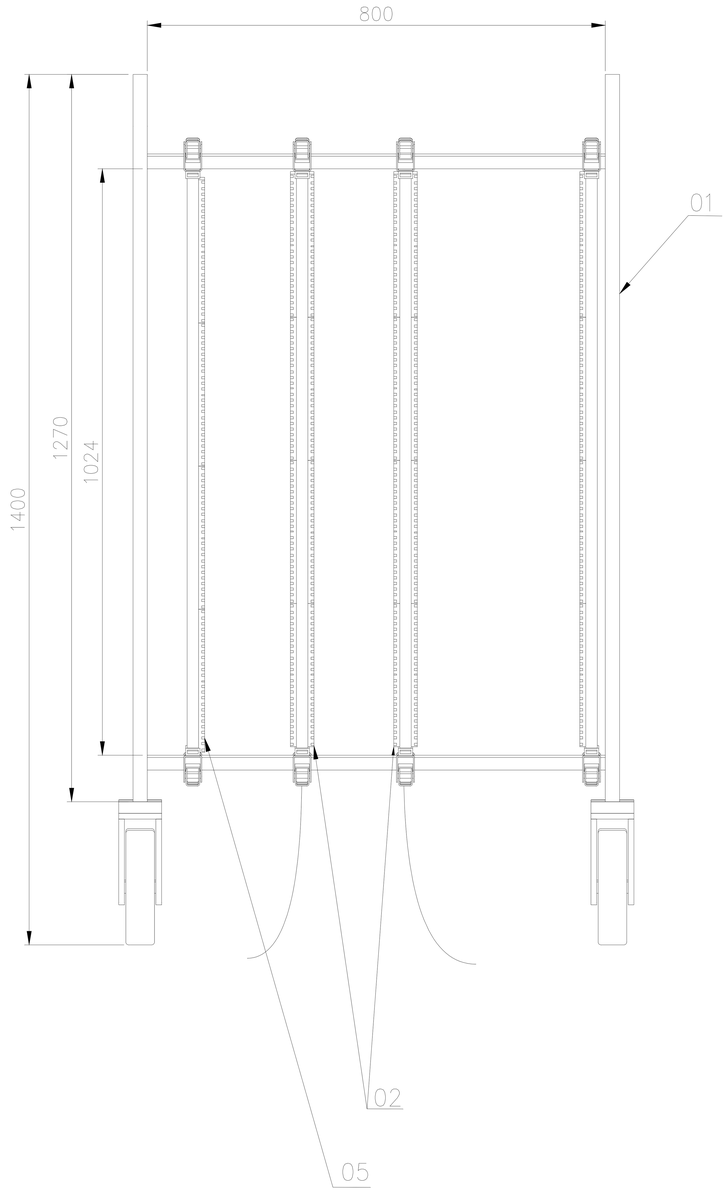

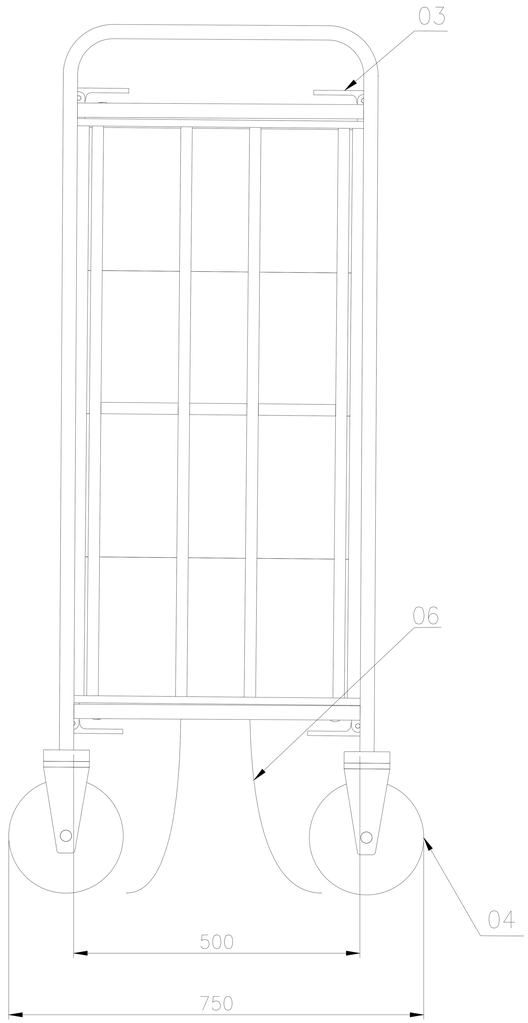

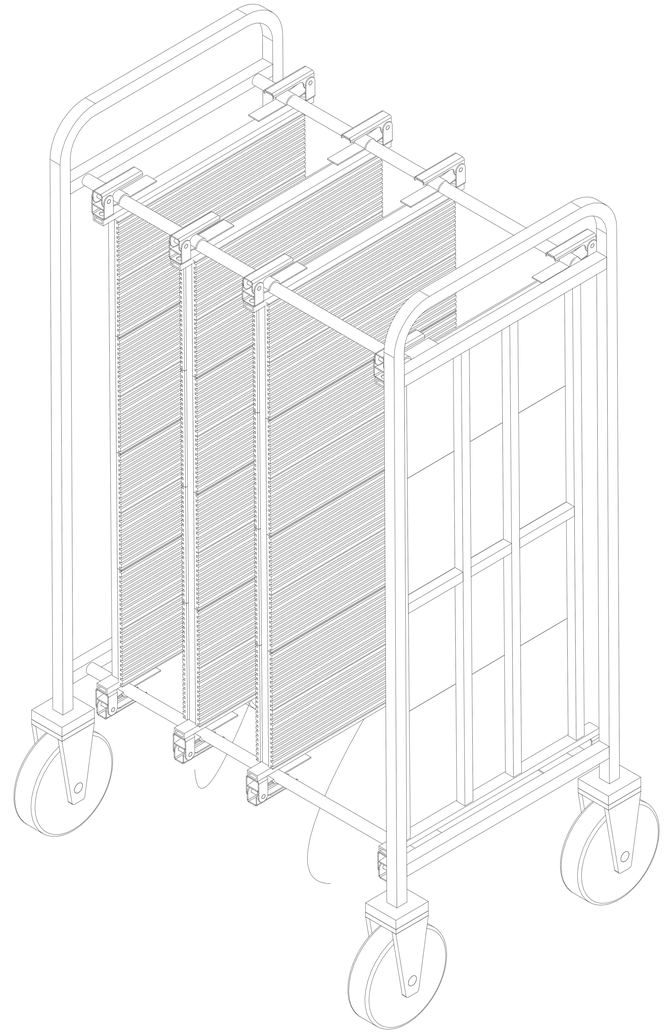

REFERENCE VIEW

ITEM NO	PART NAME	QUANTITY		MATERIAL
01	FRAME STRUCTURE	1 SET		AS PER PURCHASE SPEC. PS2020001
02	DOUBLE SIDED GROOVED PCB HOLDERS FRAME/SEPARATOR	2 SETS		AS PER PURCHASE SPEC. PS2020001
03	LOCKING LEVER SET WITH FASTENERS	16 SETS		STEEL, Zn PLATED
04	TROLLY WHEELS WITH 2 WHEELS LOCKING	4 SETS		AS PER PURCHASE SPEC. PS2020001
05	ONE SIDED GROOVED PCB HOLDERS FRAME/SEPARATOR	2 SETS		AS PER PURCHASE SPEC. PS2020001
06	CHAIN FOR EARTHING	2 NOS		AS PER PURCHASE SPEC. PS2020001

COPYRIGHT AND CONFIDENTIAL
The information on this document is the property of Bharat Heavy Electricals Limited
It must not be used directly or indirectly in anyway detrimental to the interest of the Company

REV.	DATE	ALTERED / CHECKED / APPROVED

ITEM NO. | DESCRIPTION | STD | DRAWING NO. | ITEM NO. / VARIANT | MATERIAL CODE / MATERIAL SPECN. | A / C | QTY. | UT.Wt. (kgs.) / QTY.

CARD TYPE 2 ← → CARD TYPE 1

NAME OF CUSTOMER/PROJECT

BHARAT HEAVY ELECTRICALS LIMITED.
ELECTRONICS DIVISION, BANGALORE

	NAME	SIGN.	DATE
DRN	RAMACHANDRA		20.02.2023
CKD	VISHNU RAJ		20.12.2023
APPD	PRABHAKARAN		20.12.2023

DEPT. | CODE 406 | FOR UNSPECIFIED TOLERANCES REFER ED 0230499 | SCALE 1:5 | WEIGHT(Kg) | REF. TO ASSY. DRG. | ITEM NO. | No.OF ITEM | No.OF VAR

TITLE: PCB HOLDER TROLLY ADJUSTABLE

DRAWING NO. 1 692 35 60023 REV. 00

SHEET NO. 01 | NO. OF SHEETS 01

A1 SIZE

PURCHASE SPECIFICATION

TITLE : - **ESD Safe PCB Trolley**
MAT CODE NO. : - **DV0692560017**

PUR.SPEC. NO : **PS2020001**

NO. OF PAGES : **03**

BHARAT HEAVY ELECTRICALS LIMITED

ELECTRONICS DIVISION

BANGALORE - 560026

COPYRIGHT & CONFIDENTIAL
The information on this document is the property of Bharat Heavy Electricals Limited & must not be used directly or indirectly in any way detrimental to the interests of the company.

REVISION HISTORY SHEET

REV NO	DATE	NATURE OF CHANGE	REASONS	PREPARED BY	APPROVED BY
00	07.12.2023	FIRST ISSUE	NEW SPEC	MADHUJYOTHI SYAMALARAO D	PRABHAKARAN K

APPROVED BY – PRABHAKARAN K	
PREPARED MADHUJYOTHI SYAMALARAO D	DATE 07.12.2023

COPYRIGHT & CONFIDENTIAL
The information on this document is the property of Bharat Heavy Electricals Limited & must not be used directly or indirectly in any way detrimental to the interests of the company.

Separators:

- 4 nos., PP Compound with Conductive Fibre (ESD Safe), Injection Mould, Black Colour with Number Identification in each Plate. 2 Nos. Single side, 2 Nos. Double Sided.
- Making Provision for Storing PCBs in three columns and Depth -450 to 470 mm
- Surface Resistance: 10e4 to 10e6 Ohms
- Each Column should hold 100 PCBs.
- Handle Adjustable with 4 Locks for each Plate.
- Pitch: 10 mm
- Each Slide Slot thickness: 5.5 to 6 mm
- Support Depth: 5 mm
- Slot Opening: around 4 mm

Frame:

- Material: Stainless Steel, Grade SS202 or better, Frame – 25 mm or better, Thickness – 1 mm or better

Wheels:

- 4 Nos. rotatable (2 With Brake), ESD Safe.

Trolley:

- Size: Around 850 X 550 X 1400 mm
- Net Weight of the Whole Trolley (Without any PCBs): 35 to 40 Kgs.
- Load Carrying Capacity: 100 Kgs.
- Ground clearance: More than 180 mm.
- Handle Clearance at TOP: Around 130 mm.
- ESD Earthing Chains – Minimum 2 Nos.