Memorandum of Understanding

M/s BHEL
Trichy – 620 014

and

M/s. XXXXXXXXXXXXXXXXXXX.
XXXXXXXXXXXXXXXXXXXXXX
XXXXXXXXXXXX
XXXXXXXXXX

(Vendor Code : XXXXX)

For supplying

Electrically Operated Handling Equipment

MOU NO : MOU / TPBHEL / HOIST- Rev.05
Date : 24-10-2018

Engineering **Quality** **Purchase** **Vendor**

Memorandum of Understanding (MOU) between BHEL / FB and M/s. xxxxxxxxxxxxxxx, for supplying Electrically operated Handling Equipments.

1.0 GENERAL:

1.1 This MOU is signed for supplying the Hoists as per the agreed standardized specification so that these details need not be discussed again and again for future supplies.

1.2 The various aspects covered in this MOU are as follows.

1.2.1 The general points are covered in Section – 1.0 – General.

1.2.2 The specification requirements are covered in Section – 2.0 – Specifications.

1.2.3 The documents to be submitted along with the offer / after placement of Order / along with the hoists are covered in Section 3.0.

1.2.4 The Inspection / Testing and Packing requirements are covered in Section – 4.0 Testing, Inspection and Packing.

1.2.5 The project specific details / data and if any customer specific requirements shall be covered in Section 5.0 – Project related Information. **DEVIATION ON PROJECT RELATED INFORMATION WILL LEAD TO REJECTION OF OFFER.**

1.2.6 **If any differences are found between the details given in Section 5.0 and other sections, Section 5.0 shall be considered as final and the vendors shall meet this requirement for that particular project.**

1.3 Sections 1.0, 2.0, 3.0 and 4.0 are standard and Section 5.0 alone will be furnished along with enquiry to the vendors for their acceptance.

1.4 **It is agreed that no deviations will be taken by the vendors while submitting their offers against future enquiries**.

1.5 Since the specifications are standardized and an understanding has been reached, the future enquiries will be floated on "SINGLE BID SYSTEM" only. Hence, if any offer is found with deviations, the same will be totally rejected and will not be considered for further evaluation.

1.6 Pre commissioning spares (if applicable) with price break up as per the list (vide Section 5.0) shall be supplied along with the hoists.

1.7 Two years recommended Spares list(vide Section 5.0) with price break up shall be enclosed.

1.8 If any special or non-standard tools are required for installation, operation or maintenance, the same shall be supplied along with the hoists.

1.9 Trouble-free operation of the equipment shall be guaranteed for a period of 18 months from the date of commissioning OR 24 months from the date of dispatch whichever is earlier.

1.10 Vendor has to provide Bank Guarantee for 10% order value (as per BHEL format) valid

for a period mentioned in point No.1.10.

1.11 Dispatch clearance will be issued along with PGMA with DU Nos. for the ordered items to vendor after the receipt of acceptable Inspection Report. Vendor agreed to mark the PGMA with DU Nos. in the casing of the packing and in the Packing Slip.

1.12 Materials shall be dispatched on "Door Delivery with or without Consignee Copy attached basis to avoid demurrage at transporter's go down".

1.13 Since the vendors works alone is approved by BHEL, it is agreed the vendor will manufacture this item in their own works only and will not off-load the jobs to any other suppliers without the written approval by BHEL.

1.14 All components of the hoists should be packed in such a way that it should not get damaged during transport.

1.15 BHEL and the Vendor shall have an involvement which will commence at bid stage and follow through the completion and acceptance, thus ensuring total conformity to Purchaser's requirements.

2.0 SPECIFICATIONS

2.1 Scope

This specification covers design, manufacture, inspection, testing and supply of electrically operated Under Hung Crane (UHC), Trolley With Hoist (TWH), and Down Shop Leads (DSL). Technical parameters for equipment design are furnished in Section-1 to 4. For scope of supply and special requirements refer to Section-5.

This is a general specification dealing with technical requirements of various handling equipment as specified under scope. Contract requirements and special requirements (if any) for a particular project are specified in Section5.

2.2 Codes & Standards:

In addition to the following latest revisions of codes and standards, the equipment shall be designed to meet the other governing standards as applicable and also meet with the local standards where the equipment is installed.

IS 3938	...	Electric wire rope hoists.
IS 807	...	Design, Erection and testing (structural portion) of cranes and hoists code of practice.
IS 2758	...	Mild steel point hooks for use with wire rope thimbles.
IS 15560	…	Point hooks with shank upto 160 tonne -specification
IS 2266	...	Steel wire rope for general engineering purpose.
IS 2365	...	Specn for Steel Wire Suspension Ropes for Lifts, Elevators and Hoists
IS 3681	...	Gears-cylindrical gears-accuracies.
IS 325	...	Three-phase induction motors.
IS 1554 Part 1	...	Insulated cables for working voltage upto and including 1100V.
IS 4691	…	Degrees of protection provided by enclosures for rotating electrical machinery.
IS 2062	...	Hot rolled low, medium and high tensile structural steel.
IS 816	...	Code of practice for use of metal arc welding for general construction in mild steel.
IS 2074	...	Ready mixed paint air drying red oxide-zinc chrome, priming.
IS 2932	...	Enamel synthetic, exterior (a) under coating, (b) finishing.
IS 3177	...	Code of practice for electric over head traveling crane and gantry crane other than steel work cranes.
IS 13947 (Part I)	…	Specification for low-voltage switchgear & control gear
IS 1024	…	Code of practice for use of welding in bridges and structures subject to dynamic loading.

IS 1875	…	Carbon steel Billets, Blooms, Slabs and Bars for Forgings.
IS 1835	…	Specification for Round Steel wires for ropes.
IS 9968 (Part-1)	…	Elastomer insulated cables:part 1 for working voltages upto and including 1100V.

2.3 Design & Constructional Requirements:

Construction of TWH, UHC and DSL shall be of consistent capacity, lift, head room, span, over hang and any other parameters as specified in Annexure- I of Section-5.

2.4 Electrically operated Under Hung Crane & Trolley With Hoist:

All equipments shall be designed for OUTDOOR application and suitable for ambient temperature range of 0 to 50ºC. Purchaser will provide electric power supply at one or more points near to the monorail / runways as required in the plant layout. Service class to be considered for design of trolley with hoist and under hung crane shall be as per class 2 of IS 3938 and IS 3177 / IS 807 respectively. All material used for construction of different components shall individually conform to applicable standard. All welds shall conform to IS 1024 and welders shall be qualified to AWS D1.1 / ASME Section IX.
Trolley with hoists and Under Hung Cranes shall be provided with protective hood and hard rubber sweepers.

2.4.1 Hooks:

2.4.1.1 Hooks shall meet the dimensional, material testing & inspection requirement of IS 15560.

2.4.1.2 The hook shall be provided with standard depress type safety latch and swivel thrust bearings with hardened race.

2.4.1.3 Lugs for fixing safety latch shall be either forged along with the hook or clamp type latch with lugs shall be provided.

2.4.1.4 Welding of lugs not permitted.

2.4.1.5 Locking arrangement shall be provided to avoid unscrewing of the hook in service.

2.4.1.6 Material of hook shall conform to IS-1875 or equivalent (with minimum tensile strength 50-62 Kg/mm2.) and made by controlled grain forging and normalized.

2.4.1.7 Proof load tests for all the hooks shall be tested as per IS 15560 (i.e. for lifting capacity upto 32T, proof load shall be two times the lifting capacity. For lifting capacity 40T to 50T, proof load shall be 1.7 times the lifting capacity).
All hooks shall be examined by MPI / LPI & UT (UT required for hooks >5.0T capacity) for cracks after proof load test.

2.4.1.8 The hook shall not distort or fracture. Ball & roller bearings shall not be used in these hooks. Anti-friction thrust bearings shall be used.

2.4.2 Wire Ropes:

Wire ropes shall meet the requirement of IS 2266 / IS 2365. Shall have six strands of 37/36 wires per strand with an ultimate tensile strength of 180 Kg/mm^2. The wire rope shall be galvanized, as per IS 1835 type B. All wire ropes shall be proof load tested for 2 times of SWL/Fall. Breaking load shall not be less than five times SWL/Fall. Indicating the breaking force of wire rope, test certificate provided by the wire rope manufacturer for breaking load test shall be furnished during inspection. The rope shall be of sufficient length to retain two full wraps on the drum at lowest hook position.

2.4.3 Drum & Sheave:

Drum shall be of welded steel or seamless steel and Sheave shall be of cast or welded steel. The drum shall accommodate all the length of rope required for the lift plus two dead wraps at each anchor point without overlap. Drum can be grooved right or left or both, and grooves shall suit the ropes used. Sheaves shall be equipped with sheave guards to retain the rope in groove.

2.4.4 Gears & Pinions:

Material of construction shall be conforming to relevant Indian Standard (IS:3681) / (BS 970) or equivalent and shall be hardened if required to achieve the specified hardness. Hardness for Cross Travel & Long Travel (CT & LT) shall be in the range of 250 to 290 BHN for pinions and 215 to 255 BHN for gears. Hardness for hoisting shall be in the range of 285 to 300 BHN for pinions & 250 to 265 BHN for gears. In case of case hardened gears and pinions, a max. hardness of 350 BHN for gears and 390 BHN for pinions is acceptable. However, vendor shall maintain and ensure that gear hardness is always less than pinion hardness by at least 35 BHN. Helical/Spur gears shall be used for hoists, CT & LT. All gears and pinions shall be examined by LPI/MPI for surface cracks after hardening. In case of enclosed gearing, means shall be provided for ample lubrication. Such lubrication points are to be indicated in the drawing. The vendor shall specify the specification of lubricant, market trade names, quantity of lubricant requirement and frequency of lubrication.

2.4.5 Wheels:

Shall be made out of forged or low carbon steel/cast steel with heat treated to 175 to 200 BHN hardness. The drive gears, if any, integral with the wheel shall be of the same material and hardness. Trolley wheels for hoists shall be spur geared type, cast / forged 4 wheeled out of which 2 wheels shall be driven by motor.

2.4.6 Rotating & Stationary shafts:

The material for shafts shall be as per relevant Indian standard or its equivalent and shall be hardened and tempered with a minimum tensile strength of 60 Kg/mm^2 and hardness shall be maximum 175 to 250 BHN. UT test shall be done for all Shafts of diameter more than 50mm. UT acceptance norms shall be as per ASME section VIII; Division 2.

2.4.7 Bearings:

Shall be reputed make (FAG/SKF/TATA/NBC) and shall meet relevant IS standards. All bearings shall be designed to give a minimum service life of 20 years.

2.4.8 Brakes:

Hoisting, cross travel and long travel shall be provided with electro- mechanical friction shoe type brake or Disc type brakes or Electromagnetic disc type brake or Electro hydraulic thruster brake. The brakes shall be released with electric power and fail-safe in case of power failure. All brakes shall, irrespective of controller portion, be applied immediately on operating an emergency push button or switch. It shall be possible to arrest the load at any desired location with minimum slip. Slip with reference to speed shall be specified along with the offer. Brakes shall be designed as per the latest edition of IS:3938 / International standards.

2.4.9 Trolley:

Shall be of minimum 4 wheeled out of which 2 wheels should be spur geared type and fabricated construction. Trolley shall be designed to suit the monorail size (straight or curved monorail, Which Purchaser will furnish during drawing approval). The travel path of the trolley on monorail (straight / curved) shall be read from BHEL drawing furnished along with the enquiry.

2.4.9.1 For ID Fan and Economiser handling hoists, suitable integral platform shall be provided at hoist to access control panel / motor / trolley / brake etc.,

2.4.10 Frame:

The frame shall be designed to proper strength, built from steel plates with bolted/welded construction.

2.4.11 End Carriages: (For Cranes)

Shall be of minimum 4 wheeled out of which 2 wheels should be spur geared type and fabricated construction. Suitable wheelbase shall be provided. End carriages shall be designed to suit the runway beam size. (Which Purchaser will furnish during drawing approval.) End carriages shall be connected with crane girder by welding or by fasteners (For ease of transportation, if site welding is required, the same shall be done at site by Purchaser).

2.4.12 Crane Girders:

Crane girders shall be of rolled section. Fabricated beam and welded beam shall not be used for this purpose unless otherwise accepted/approved by the Purchaser for special cases. For such cases, refer annexure-I of Section-5 to this specification for details. Camber / deflection under load shall be within SPAN / 1000 mm. In case vendor desires to provide higher camber, the same shall be clearly specified in the drawing. In any case camber provided shall not exceed –

- In case of double girder crane:

(Span ÷1000mm) + (Deflection under self-load of trolley with hoist ÷2)

- In case of single girder crane:

(Span ÷1000mm) + Deflection under self-load of trolley with hoist

Allowable bend shall be 1mm/metre and maximum bend shall not exceed 6mm for total span.

2.4.12.1 Buffers shall be provided for stopping the crane.

2.4.12.2 Design of crane should ensure anti tilting and anti toppling while the hoist is at overhang side.

2.5 Down Shop Leads (DSL):

DSL system shall be designed to transfer the power supply from End user supply point to the equipment, which is moving on runway beams / monorails. The DSL system shall be of Cable trolley type or Taut wire loop type as per contract requirement specified in Section 5.

2.5.1 Cable Trolley Type:

Cable trolleys shall run on "Tee" track / I-Beam. The system shall consist of:

- "Tee" track
- Cable Trolleys
- Flexible power cable (Fixed & Trailing)
- Switch fuse units / Isolators
- Supports for Auxiliary girder or "Tee" track / I-Beam
- Link chain
- Fasteners

2.5.1.1 Construction:

2.5.1.1a "Tee:" Track / I-Beam:

The system shall be provided with rolled sections suitable for cable trolley wheels as per the relevant Indian Standard. The “Tee” track / I-Beam shall be designed with minimum deflection for smooth travel of cable trolleys.

2.5.1.1b Cable Trolleys:

4-wheeled cable trolleys shall be of sturdy design constructed with suitable material. Diameter of trolley wheels shall be minimum 40mm. and with double seal roller or ball bearing. The cable trolleys shall be designed to take the load of cable and moving with the cable load smoothly on auxiliary girder or "Tee" track. Suitable arrangement shall be provided to tie the power cable and link chain with cable

trolley. Vendor shall specify the construction of material selected in the offer. Arrangement drawing shall be submitted along with the offer for review. After placement of purchase order, the same shall be submitted for approval. Vendor shall indicate the weight of total cable trolleys in the drawing.

2.5.1.1c Flexible Power Cable: (Fixed & Trailing)

(For Cable trolley & Taut Wire Loop type)

The trailing cable shall be suitable for 415V AC; 3 phase with neutral; 50Hz.; copper PVC flexible cable, PVC 650/1100V grade, suitable size/rating (for all motors running simultaneously) for the equipment under supply. The power supply flexible trailing cable shall comply with latest revision of IS 694 / IS 1554 Part 1 /IS 9968 and other relevant Indian standard for the equipment under supply. If any special requirement, respective IS Standard as mentioned in Section –5 of this specification shall be followed. For sub-vendor list refer clause no 2.12.5. Vendor shall indicate the weight of total system in the drawing.

2.5.1.1d Switch Fuse Units or Isolators: (For Cable trolley type & TW Loop type)

The system shall be supplied along with suitable switch fuse units / isolators to take the full load current, when the equipment trolley with hoist and under hung crane) is working with maximum safe working load. For sub-vendor list refer clause no 2.12.6.

2.5.1.1e Supports:

The system shall be provided with suitable supports to take the load of “Tee” track / I-Beam, cable trolleys, power flexible trailing and other materials.

2.5.1.1f Link Chain:

The system shall be provided with suitable link chain to pull the trolleys, which is with the load of cable. During pulling of cable trolleys due to impact load, the chain shall not fail at any point. The chain shall be made out of minimum 3mm diameter carbon steel wire.

2.5.1.1g Fasteners:

Suitable fasteners shall be provided. Fasteners shall be electro - galvanized / Hot dipped.

2.5.2 Taut wire loop:

Ceramic reel insulator shall drag on stretched steel wire with trailing cable. The system shall consist of:

- Bracket
- End hook
- Flexible power cable (Fixed & Trailing)
- Switch fuse units/Isolators

- Reel insulator
- Steel wire rope
- Rope clamp & thimble
- Leather belt or nylon wire rope
- Fasteners.

2.5.2.1 Construction:

2.5.2.1a Bracket:

Suitable size and material shall be provided to take the load of cable and axial force by the end hook.

2.5.2.1b End hook:

Suitable end hook shall be provided for the size of steel wire rope.

2.5.2.1c Reel insulator:

Cable reel insulators shall be of ceramic, with suitable size of the stretch wire. Suitable arrangement shall be provided in the reel insulator to tie the trailing cable with nylon rope or leather belt.

2.5.2.1d Steel wire rope:

Steel wire rope shall be of minimum 6mm diameter as per latest revision of IS 2365. Steel wire rope shall be suitably sized for load of cable without sagging for the total travel length.

2.5.2.1e Rope clamp & thimble:

Suitable rope clamps and thimbles shall be provided to tie the rope with bracket through end hook.

2.5.2.1f Leather belt or nylon tie:

Leather belt or nylon tie shall be supplied to tie the trailing power cable with reel insulator.

2.5.2.1g Fasteners:

Suitable fasteners shall be provided wherever required. Fasteners shall be Electro-galvanized / hot dipped.

2.6 Electricals & controls:

2.6.1 CT, LT & Hoisting Motors (AC; Non-Flame Proof)

2.6.1.1 Site condition

2.6.1.1a	Altitude above sea level	: Less than 500m.
2.6.1.1b	Ambient temp. Condition	: 0 - 50°C
2.6.1.1c	Relative Humidity	:100%

2.6.1.1d	Atmosphere	: Dusty, salty, corrosive and highly polluted.
2.6.2	Standard (Latest revision)	: IS 325, IEC 60034, IS 3177
2.6.3	Application	: Trolley with hoist and Under Hung Crane
2.6.4	Duty cycle	: S3/S4; Duty factor: 40% CDF.
2.6.5	No of starts	: 150 starts/Hours
2.6.6	Pullout Torque	: 275 % of the full load torque
2.6.7	Rated voltage, frequency	: 415V, ±10%; 50 Hz±5% and combined 10% absolute
2.6.8	Minimum starting voltage	: 80% of the rated voltage (Cl. 2.6.5)
2.6.9	Capacity to restart (at Voltage Specified in cl.no 2.6.5)	No limitation on no. of starts. Calls for many starts at frequent intervals. Vendor to specify on any limitation
2.6.10	Direction of rotation	: Bi-directional
2.6.11	Class of insulation	: Class `F' temp. rise limited to class `B'

2.6.12 Winding treatment:

The insulation shall be given tropical and fungicidal treatment for successful operation of the motor in hot humid and tropical climate

2.6.13	Temperature rise	: With in specified limits. Vendor to specify.
2.6.14	Starting current	: Vendor to specify.
2.6.15	Method of motor starting	: DOL

2.6.16 Type of enclosure:

IP 55 as per IS 4691.

2.6.17 Terminal Box:

2.6.17.1	Type	: Weather proof IP 55
2.6.17.2	Cable gland	: Double compression type, Brass with nickel plated
2.6.17.3	Cable entry	: Suitable for both, top and bottom entry.
2.6.18	Type of terminals	: Stud type with plain washers, spring/ washers check nuts & Lugs.
2.6.19	Fault level	: 50 KA at 415V.

2.6.20 Terminals:

Separately terminated with clear identification in main terminal box with double compression type glands.

2.6.21	Lifting device	: Eye bolt or lugs to facilitate safe lifting.

2.7 Controls & Interlocks:

The control system shall envisage a control cabinet and a push button operating station. The push button control shall have control for power switching to the motors and forward/reverse motion. The control voltage of both cabinet and push button station shall be 110V AC 50 HZ. single phase. The control stations shall have enclosure protection of IP 55 (IS:13947). Necessary electrical interlocks shall be included in control cabinet for fail-safe operation. Vendor shall clearly bring out all the interlocks in the control wiring drawing and submit the same for approval. Limit switches shall be provided for long and cross travel hoists. These switches shall be interlocked to cut off power to the motor and restrict further movement when the limits are crossed. Crimping tool shall be used for fitting lugs.

2.8 Control Cabinet:

2.8.1 Application:
To house all the power contactors, control transformers, control relays, fuses, indicating lamps, switches and protection circuits of all motors of hoist.

2.8.2 Type:
Wall mounting type. Normally mounted on a framework of the hoist. The cabinet shall be made of minimum 1.6mm thick cold rolled sheet.

2.8.3 Motor Protection:
All motor shall be protected against under voltage, over load and short circuit condition.

2.8.4 Isolator :
Input power to the cabinet through switch fuse unit is required.

2.8.5 Thermal over load relays : Shall be provided suitably for all motions.

2.8.6 Indicating Lamps : Shall be provided wherever required.

2.8.7 Terminal Blocks:
Shall be of Clip on type. Shall be suitable for 1.5mm^2 copper conductor. 20% of additional terminal blocks shall be supplied as spares along with the supply.

2.8.8 Customer Supply voltage : 415V 50 Hz. 3 phase

2.8.9 Control voltage : 110V 50 Hz.

2.8.10 Enclosure Protection: (For Control Cabinet & Pendant Station)

IP 55 as per IS 13947(part I).

2.8.11 Glands:
Shall be double compression type, Brass with nickel plated. To be included in vendor scope as per requirement.

2.8.12 Internal Wiring:

1. PVC 1100V Grade 1.5 mm^2 multi-strand /copper conductor.
2. All power wiring with red and black.
3. All control wiring is to be with grey wire & shall be marked with ferules as per wiring diagram.

2.9 Control Box:

2.9.1 Type:
Pendant station to house all start/stop/forward/reverse/up & down push button for all motors.

2.9.2 Location : Hanging from equipment. Push button pendant station shall be provided at above one meter from operating floor.

2.9.3 Push Button:
For all start green push button and for stop red push button shall be used. Make shall be of Siemens / L&T / GE / Telemechanic / BCH/Technic/ Control & Switchgear (C&S) . Push button shall return to "off" position when released. One stop push button shall be lockable to enable switch off power supply when equipment in not in use. The Push Button shall be clearly marked as the recommendation of IS:3938 to indicate the function of each button.

2.9.4 Control Voltage: 110 V AC 50 Hz. Single phase.

2.9.5 Enclosure Protection:
IP 55 as per IS 13947 Part I.

Box material:

Cold rolled sheet steel with 1.6mm thickness minimum.

2.10 Cabling:
Vendor shall include all the power and control cables necessary for the system. The cable shall comply with IS 1554. The power cable shall be of copper PVC flexible and vendor shall indicate the conductor size and over all size in the offer for all the motors. The control cable shall be armoured of 1.5 mm^2 copper conductor only. The no. of cores, cable size etc shall be indicated in the offer. There shall be 20% spare cores available for all control cables offered. If any special requirement, respective IS Standard as mentioned in Section –5 of this specification shall be followed.

2.11 Earthing :
All electrical equipments (motor, control cabinet etc.,) shall be provided with required elements (like bolt, washer, nut etc.,) for proper earthing at site.

2.12 Electrical & Control Items shall be as per the approved Sub-Vendor/Make List given below.

2.12.1 Control &Thermal Over Load Relays: Siemens/BCH/L&T/GE/ Telemechanic/ C&S

2.12.2 Transformers :SE / Kappa / Ind Coil /JE/ Vikas / Logicstat

2.12.3 Motors : NGEF/Kirloskar/Siemens/Crompton-Greaves / Bharat Bijlee/Autolec/GEC/GE

2.12.4 Limit Switches :BCH / Omron / Nucon / Festo / Siemens / Kaycee / EMM / SOC

2.12.5 Power & Control Cable :CMI Ltd. / Delton Cables / Fixwell / Pushincords /Asian cables/Cable corporation

of India / Finolex /Incab/Universal/Polycab/KEI

2.12.6 Isolator / Switch Fuse Units : Siemens / L&T / GE / C&S

2.12.7 Power Switches : Siemens / L&T / GE / C&S

2.13 Name Plates:

2.13.1 Nameplates shall be provided with non-corrosive material

2.13.2 Name plates shall have details of the equipment, model no., type, capacity, lift, span, and motor & brake details.

2.13.3 All lubrication points shall be provided with nameplates.

2.14 Limit switches and Electrical Protective devices

Limit switches and Electrical protective devices are to be supplied as per IS:3938 - 1983 to limit the ultimate positions of the hook, the hoist block running in monorail and crane long travel (in case of cranes).

3.0 DOCUMENTS TO BE SUBMITTED

3.1 Along with Offer.

3.1.1 Quality plan, General arrangement & DSL arrangement / Schematic drawing showing the critical dimensions with complete bill of materials. All dispatchable components / assemblies shall be indicated in detail. Sub-vendor items' make also shall be indicated in the drawing.

3.1.2 Wiring circuit diagram with details of make, type and rating of all components.

3.1.3 Spares list if required for 3 years of trouble free operation along with price. Commissioning / Initial spares shall form part of the base offer.

3.1.4 Duly filled-in and signed General Data Sheet (Section 5) for trolley with hoist, under hung crane and down shop lead system with all required details.

3.1.5 Write up on special features if any.

3.1.6 Technical specification for equipment.

3.1.7 Catalogues and other details of the product shall be submitted along with the offer.

3.1.8 Exclusion:

Any exclusion from scope of supply shall be clearly spelt out in the offer itself. Exclusion of major / critical items shall make the offer liable for rejection.

3.2 After Placement of Order.

3.2.1 Quality plan shall be submitted by vendor for Purchaser's approval.

3.2.2 Dimensional drawings of Under Hung Crane, Trolley With Hoist, Down Shop Leads, cable trolley, control panel and wiring diagram with B O M for approval.

3.2.3 Data sheet (Annexure-III to specification) for hoists and cranes for Purchaser / End user's approval.

3.2.4 The following calculations/details shall be furnished.

3.2.4.1 Hoist motor and Travel motor power calculations.

3.2.4.2 Brake Torque calculations and Brake selection for each hoist.

3.2.4.3 Main Hoist rope and wire rope selection.

3.2.4.4 Cross travel and Long travel wheel load and wheel diameter calculations/details.

3.2.5 Priced List of Recommended Spares for 2 years trouble free operation and maintenance. (if applicable)

3.2.6 Vendor to furnish load test procedure for the quoted hoist along with test load required to be carried out at site.

3.2.7. Vendor to fill and submit motor data sheet Annexure –IV.

3.3 Along with the Hoists:

3.3.1 Physical, Chemical, NDE and hardness test certificates shall be provided wherever applicable for trolley / crane wheels, wire ropes, pulleys, hook, gears, pinions, and shafts.

3.3.2 Test certificates for having carried out the tests as per Section-4 of this specification under Purchaser and End user's presence.

3.3.3 Test reports for wire rope and hooks and Test reports for NDT examination of gears, wheels, pinions and hooks

3.3.4 Type test and routine test certificates for motors and as per IS 325.

3.3.5 Performance test certificates for UHC, TWH, safety devices and other electrical items.

3.3.6 TC for control panel, pendent stations and motors shall be provided.

3.3.7 Two sets of as-built arrangement drawings and electrical circuit drawings shall be sent along with the hoist. 2 set Hard copy along with 2 set soft copy in CD/USB drive of vendor O&M Manual (along with BHEL approved vendor drawings & documents) for supplied hoists shall also be supplied along with the consignment.

3.3.8 The vendor check list shall be filled up at the manufacturer's work and shall be duly signed by inspection engineer and manufacturer's representative.

3.3.9 Drawing & O&M Manuals:

3.3.9.1. The bill of material shown in the drawing shall match with that of the dispatchable unit as indicated in the packing slip.

3.3.9.2 The drawing shall be prepared in AUTOCAD and vendor shall forward both hard copies and CD/USB drive (Copied with drawing files) to the Purchaser and along with the hoists.

3.3.9.3 O & M Manuals:

3.3.9.4 Operation and maintenance manuals shall be provided with details for Storage at site, installation, erection procedures, drawings, motor data sheet, relay characteristics, operating and troubleshooting, lubrication schedule, spares data, spares identification drawings, spares replacement procedure and special requirements if any. 2 Set Hard copy shall be sent along with hoist and 1 set to be sent to BHEL / Tiruchirappalli. 2 Set soft copy as CD/USB drive shall be sent along with hoist and 1 set soft copy as CD/USB to be sent to BHEL / Tiruchirappalli.

3.3.9.5 The hard copies of the Manuals should be in printed form only.

3.3.9.6 The size of manuals should be in correct A4 size with drawings in A3 size. Large size drawings (greater than A3 size) should be reduced in A3 size and inserted.

3.3.9.7 Drawings shall be of printed or laser printed form only.

3.3.9.8 O & M manuals, (hard copies and CD) shall be submitted to BHEL / Tiruchirappalli prior to dispatch of the equipment.

3.3.9.9 O&M **Manual, generally should contain the following:**

3.3.9.9a Data sheet with makes of components supplied.

3.3.9.9b Maintenance (including, storage, installation, Erection and lubrication wherever necessary) and service

3.3.9.9c Recommended spares for 2 years trouble free service.

3.3.9.9d Trouble shooting

3.3.9.9e Assembly drawings with part list, dimensional drawings & other applicable drawings.

3.3.9.9f Manuals should pertain only to the types or model supplied for the particular contract.

4.0 TESTING, INSPECTION AND PACKING

4.1 Purchaser's and End user's representative shall have access to the works of vendor at all reasonable times for the purpose of witnessing the purchased equipment being tested.

4.2. All electrical and mechanical equipment like motor, ropes, cables, electrical control panel etc. shall be tested as per the relevant IS standard at the vendor's / Sub-vendor's works.

4.3. The Trolley with hoist shall be run 5 times at manufactures works. First and 5th runs shall be tested with 125% safe working load. Second, third and fourth run with safe working load shall be conducted without any pause. The motor currents shall be checked and shall be with in the rated full load current of each motor at safe working load. The hoist shall be capable of lifting load from mid-air and moving the load without any problem. Normal speed shall be achieved during full load tests. Headroom variation shall be checked & allowable variation is 50mm only. Hook approach shall be checked as per approved drawing. (Ref. Standard : cl.20.2 of IS 3938)

4.4. The brakes for hoisting, long travel and cross travel shall be tested with 125% safe working load. The brakes shall be capable of holding this load, when the load is suspended by the hoist hook. As per IS 3177, the long travel motion should be tested at manufacturer's works on no load keeping the crane on sleepers or test bench. Maximum slip (braking path) shall be as per approved data sheet / drawing for hoisting and cross travel motions.

4.5 Test shall be conducted for effectiveness of automatic devices for hoist to limit the upward/downward & travel of hoist and to limit the forward & reverse travel of crane.

The limit switch shall be checked at vendor's works. Others shall be checked at site by Purchaser / End user and if found defective, the same shall be replaced at free of cost by vendor.

4.6 Before the hoist is put into operation, over load relays (electrical) shall be tested for lift & cross travel and sustain 125% safe working load. Long travel with 125% SWL shall be tested at site by Purchaser / End user and if found defective, the same shall be replaced at free of cost by vendor.

4.7 Trolley with hoist and under hung crane gears shall be tested with & without load for alignments, smooth and trouble-free operation.

4.8 Equipment shall be tested for hoisting and cross travel with 125% SWL.

4.9 Hoisting, and cross travel speed shall be tested and shall ensure the tolerance with in 10%. Hoisting and CT shall be tested for minimum 1.0 to 2.0m. (for hoisting- height & for cross travel-length). Long travel speed shall be tested at site. Vendor shall be responsible for meeting for full lift and lower limit switch operation at site. Any failure at site to meet the above requirement shall be resolved by the vendor at site at his cost.

4.10 Long travel shall be tested at site with and without safe working load by Purchaser / End User and if found defective, the same shall be replaced at free of cost by vendor.

4.11 **Load test** for TWH and UHC shall be carried out after installation at site under the supervision of the vendor's representative, to the satisfaction of the Purchaser / End user. Vendor should depute their Engineer for a period of 10 days per boiler free of cost.

4.12 All welding shall be tested with LPI / MPI. All butt welds shall be tested with radiography. Acceptance norms for radiography shall be as per AWS D1.1. /ASME Sec IX.

4.13 Hooks:

4.13.1 Raw material test certificate shall be submitted by manufacturer for scrutiny.

4.13.2 Proof load test should be done as per IS 15560 on each hook irrespective of capacity.

4.13.3 After proof load test, hook shall be examined for cracks, deformation, flaws and other defects with LPI / MPI & UT. No linear indications or cracks are acceptable while carrying-out LPI / MPI. Acceptance norm for UT shall be as per A388/ ASME - Section VIII - Division 2- AM203.2 / ASTM E446.

4.14 Under Hung Crane:

4.14.1 Check the dimensions of the under hung crane as per relevant standard.

4.14.2 Deflection Test: Under hung crane shall be tested for deflection with safe working load at the middle point of the span. Datum line for deflection is obtained by placing

hoist at one extreme of the span with hook approach. The deflection with Safe Working Load at center of span compared with this datum should be less than= $\frac{SPAN}{1000} mm$.

4.15 Down Shop Lead System (DSL):

4.15.1 Cable trolley shall be tested for smooth running on "Tee" track with cable load.
4.15.2 Cable reel insulator shall be tested for smooth running on steel wire rope with cable load.
4.15.3 Any discrepancy found in the design and/or supply shall be resolved by Vendor at the installation (site) at Vendor's Cost.

4.16 Electrical components:

4.16.1 The insulation values of all electrical equipments should be checked. Reading shall be not less than 1.0 MΩ with an unregulated type tester with DC voltage not less than twice the rated voltage.

4.16.2 Control panel shall be verified for make, model no. and location of all relays & components as per the approved drawing.

4.16.3 Functional test shall be conducted for power and control circuits.

4.16.4 Test for high voltage and measurement of insulation resistance shall be conducted.
4.16.5 Degree of protection test report shall be submitted. (Type test report)

4.16.6 The satisfactory operation of each controller, switch, contactor relay, other control devices, the connectors of all circuits and protective devices shall be tested under the most unfavourable conditions.

4.16.7 TC for control panel, pendant stations and motors shall be provided.

4.18 Painting, Protection, Packing, Supply and Identification:

4.18.1 Surface Preparation:

Weld slag & spatter shall be removed and the surfaces to be coated shall be free from contamination. Surface defects shall be removed by suitable methods. Sharp edges shall be smoothened by grinding. Prior to surface preparation oil, grease, drilling emulsions, cutting emulsions and preservative agents shall be carefully removed by suitable solvents. The surface shall be carefully dried with clean cloths to prevent the dissolved impurities from spreading over the entire surface. The surface shall be cleaned by wire brush and shot blasting if required. Proper adhesiveness of paint to the surface shall be ensured.

4.18.2 Painting:

Normal painting schedule is as detailed below. For special requirement if any, refer Section-5.0 to this specification.

4.18.3 **Control cabinet:**

Exterior: Grey; Interior: Brilliant white - glossy finish with enamel paint. For special painting if any, refer Section 5 to this specification. Paint thickness: Exterior - 120 microns; Interior - 80 microns minimum
Alternatively, control panel shall be of powder coated but both outside and inside will be of grey in colour.

4.18.4 Two coat of red oxide with minimum 40 microns DFT as per IS 2074 and two coats of synthetic enamel paint with minimum 40 microns DFT as per IS 2932.
Colour Scheme:

Under hung crane	: Golden Yellow
Trolley with hoist	: Golden Yellow
Interlock mechanism	: Ash Grey
DSL Components	: Ash Grey
Hook	: Black

4.18.5 All the despatchable units shall be packed in a wooden case with waterproof material. The packed item reaching site shall be suitable to be stored in open at site.
4.18.6 The material shall be dispatched with clear bill of material for each system.
4.18.7 Each and every despatchable item shall be identified with item number. Purchase Order reference number and tagged properly for easy identification.
4.18.8 Two sets of as-built arrangement drawings and electrical circuit drawings shall be sent along with the consignment.

5.0 PROJECT RELATED INFORMATIONS (will be filled and furnished during enquiry)

Project Name :

Enquiry No. / P.O.No. :

Sl.No.	Description	Specification	Vendor Confirmation Yes / No
5.1	Hoist, Crane & DSL Parameter	Refer Annexure-I	
5.2	Power & Control cable code		
5.3	Power supply		
5.3.1	Control supply		
5.3.2	Commissioning Spares	Vendor to specify	
5.4	2 Years recommended spares	Vendor to specify	
5.5	Data Sheet	(Annexure-III) Vendor to fill and submit	
5.6	G.A. Drawings (for hoists, cranes, DSL, Wiring diagram, pendant etc.)	Vendor to submit	
5.7	Motor Data Sheet	(Annexure –IV) Vendor to fill and submit after P.O	
5.8	Special contract requirements		

Note: 1. Deviation in the above requirements shall reject the offer.
2. If required, please add more sheets.

Engineering **Quality** **Purchase** **Vendor**

Trolley with Hoist - Electrically Operated

Sl. No.	Appln.	Ref Drg No	Drg Item no	Cap. in T.	Lift in m.	Hd. room in mm.	Monorail			Qty / Blr. in nos.
							Type	Size	Bottom Elev. In M	
01	PA & FD Rotor	1-99-100-40888/01	03	05.00	11.50	Supplier to furnish	WELDED BEAM	600x250; Tf=20, Tw=12	12.660	2
02	PA & FD Motor	1-99-100-40888/01	01	20.00	7.50		WELDED BEAM	600x250; Tf=25,Tw=16	9.400	2
03	ID Fan Motor	1-99-100-40889/01	03	58.00	09.20		WELDED BEAM	1000x400; Tf=50,Tw=25	12.000	1
04	ID Fan Rotor	1-99-100-40889/01	01	22.00	15.50		WELDED BEAM	700x300; Tf=32,Tw=20	17.418	1
05	APH Elements	1-99-400-40890/01	01	2.00	28.00		WELDED BEAM	WB500X250-16/12	32468.000	1
06	SCAPH Handling	1-99-400-40891/01	01	2.50	14.00		WELDED BEAM	WB400X250-16/12	15750.000	1
07	Pressure Parts Handling #	0-99-502-40357/02	02	12.00	80.00		WELDED BEAM	As per supplier details	80268.000	1
08	F.O.Pump handling&&	2-99-600-40717/02	01	2.00	05.20		XXX			XXXX
09	Water Recirc. Pump **	0-99-300-XXXXX/00	01	Later			XXX			XXXX

Note :

The lift shown in the table is approximate only ; depending upon head room of the hoist it may be altered.

Power supply provided for the panels shall be 415V, 3 PH, 3 wire only. Vendor to make suitable transformer arrangement inside the panel for single phase control supply.

Hoist shall have an integral approach platform for control panel, motors & brake.

&& -The trolley shall be designed to travel on the curved monorail as per drg.2-99-600-40717

Annexure - I to specification MOU/TPBHEL/HOIST -Rev.05

Under Hung Crane - Electrically Operated									
Sl. No.	**Appln.**	**Ref Drg No**	**Drg Item no**	**Cap. in T.**	**Span in m.**	**Overhang in mm**	**Runway beam size**	**Qty / Blr. in nos.**	**Remarks**
01	Pr. Parts Handling	0-99-502-40357/02	01	12.0	7.50	600 / 600	WB800X400-32/16	1	

Project : YADADRI 5X800 MW Cust No.:1823-27	Annexure - I to specification MOU / TPBHEL / HOIST-REV.05							
DSL trailing cable system.								
Sl. No.	**Appln.**	**Ref Drg No**	**Drg Item no**	**Type**	**DSL travel length in m.**	**Fixed cable length in M.**	**Qty / Blr. in nos.**	**Remarks**
01	PA & FD Rotor	1-99-100-40888/01	04	**CT$$**	21.360	21.00	2	
02	PA & FD Motor	1-99-100-40888/01	02	**CT$$**	21.360	21.00	2	
03	ID Motor	1-99-100-40889/01	02	**CT$$**	64.800	18.00	1	
04	ID Rotor	1-99-100-40889/01	04	**CT$$**	64.800	22.00	1	
05	APH Elements	1-99-400-40890/00	02	**CT$$**	61.0	15.00	1	
06	SCAPH Handling	1-99-400-40891/00	02	**CT$$**	32.250	20.00	1	
07	Pressure Parts Handling	0-99-502-40357/02	03	**CT$$**	58.000	55.00	1	
08	F.O.Pump handling	2-99-600-40717/02	02	**CT$$**	180.000	19.00	1	1qty 1 No for all 5 units
09	Water Recirc. Pump							

CT $$ - Cable trolley type							

Project :
Enquiry No.:
P.O.No. Date:

Description of the item:

The following data sheet/check list is to be filled by the vendor and submitted . This data sheet shall form part of ordering specification and shall be approved by Purchaser on acceptance of the offer. All columns are to be filled up. "Non-applicability" shall be specified. Separate *Data sheet/check list for each type of crane and TWH offered shall be submitted*

Technical Data Sheet / Check list for Electrically Operated Under Hung Crane (UHC) & Trolley With Hoist (TWH)

Ref no	Description	Spec clause no	As per spec	As quoted
Gen.1.0	**Codes & Standards**	2.2		
Gen.1.1	Electric wire rope hoists….	2.1	IS 3938	
Gen.1.2	Code of practice.cranes and hoists	2.2	IS 807	
Gen.1.3	Mild steel point hooks…	2.3	IS 2758	
Gen.1.4	Point hooks with shanks upto 160t	2.4	IS 15560	
Gen.1.5	Steel wire rope…	2.5	IS 2266	
Gen.1.6	General plan-spur & helical gears	2.6	IS 3681	
Gen.1.7	Three phase induction motor	2.7	IS 325	
Gen.1.8	PVC insulator cables…	2.8	IS 694	
Gen.1.9	Degrees of protection-elec. M/c..	2.9	IS 4691	
Gen.1.10	Weldable structural steel	2.10	IS 2062	
Gen.1.11	Code of practice.metal arc welding..	2.11	IS 816	
Gen.1.12	Ready mixed paint…	2.12	IS 2074	
Gen.1.13	Enamel synthetic ..coat/finish…	2.13	IS 2932	
Gen.1.14	Code of practice .. Electrical..crane	2.14	IS 3177	
Gen.1.15	Spec for..switch gear & control gear	2.15	IS 13947-Part1	
Gen.1.16	Code of practice .. For welding…	2.16	IS 1024	
Gen.1.17	Carbon steel forging ….	2.17	IS 2004	
Gen.1.18	Round steel wire for ropes	2.18	IS 1835	
Gen.1.19	Elastomer insulated cables….	2.19	IS 9968-Part-1	
CR1.0	**Under hung crane-UHC**			
CR1.1	Capacity - in tons	Annexure-I		
CR1.2	Span - in m.	Annexure-I		
CR1.3	Overhang on either side - in mm.	Annexure-I		
CR1.4	Operating floor - in m.	Annexure-I		
CR1.5	Service class of crane/hoist	2.4	Class 2	
CR1.6	All welding	2.4	IS 1024	
CR1.7	Welder qualification	2.4	AWS D1.1/ASME section IX	
CR2.0	**Wheels-UHC**	2.4.5		
CR2.1	Wheel shape to match with runway beam	2.4.5	Vendor to confirm	
CR2.2	Wheel material	2.4.5	Forged/cast steel	
CR2.3	Wheel diameter - in mm.	2.4.5	Vendor to specify	
CR2.4	Wheel base - in mm.	2.4.5	Vendor to specify	
CR2.5	BHN	2.4.5	200 BHN Max.	
CR3.0	**Crane girder-UHC**	2.4.12		
CR3.1	Section	2.4.12	Rolled section	

Vendor Name :
Signature :
Date :

Project :
Enquiry No.:
P.O.No. Date:

Description of the item:

Ref no	Description	Spec clause no	As per spec	As quoted
CR3.2	Size	2.4.12	Vendor to specify	
CR3.3	Material	2.4.12	Vendor to specify	
CR3.4	Camber / Deflection	2.4.12	Span/1000mm	
CR3.5	Allowable bend	2.4.12	1mm/m	
CR3.6	Maximum bend	2.4.12	6mm	
CR3.7	Provision of buffers	2.4.12.1	Vendor to specify	
CR3.8	Provision of anti tilt / topple arrangement	2.4.12.2	Vendor to specify	
CR4.0	**Wheel bearing-UHC**	2.4.7		
CR4.1	Type	2.4.7	Vendor to specify	
CR4.2	Size	2.4.7	Vendor to specify	
CR4.3	Make	2.4.7	FAG/SKF/Tata/NBC	
CR5.0	**Crane speed-UHC**			
CR5.1	Maximum speed in m/min.		Vendor to specify	
CR5.2	Minimum speed in m/min		Vendor to specify	
CR6.0	**Weight of the crane - in Kgs.**		Vendor to specify	
CR7.0	**Dimensions of crane**	Vendor drawing	Vendor to specify	
CR8.0	**Limit switch-UHC-LT&CT**	2.12.4		
CR8.1	Type	2.12.4	Heavy duty	
CR8.2	Make	2.12.4	BCH/Omron/Nucon/ Festo/ Siemens/ Kaycee/ EMM/ SOC	
CR8.3	Rating	2.12.4	Vendor to specify	
CR9.0	**Crane Motors-UHC-LT**	2.6.0	Conform to IS 325	
CR9.1	Motor Rating		Vendor to specify	
CR9.2	Motor Type		Vendor to specify	
CR9.3	Motor Make		Vendor to specify	
CR9.4	Duty factor	2.6.4	40% CDF	
CR9.5	Duty cycle	2.6.4	Continuous/S3/S4	
CR9.6	Enclosure	2.6.14	IP 55	
CR9.7	Power supply (equipment)		415 VAC; 50Hz	
CR9.8	Quantity		Vendor to specify	
	Crane Motors-UHC-CT	2.6.0	Conform to IS 325	
CR9.9	Motor Rating		Vendor to specify	
CR9.10	Motor Type		Vendor to specify	
CR9.11	Motor Make		Vendor to specify	
CR9.12	Duty factor	2.6.4	40% CDF	
CR9.13	Duty cycle	2.6.4	Continuous/S3/S4	
CR9.14	Enclosure	2.6.14	IP 55	
CR9.15	Power supply (equipment)		415 VAC; 50Hz	
CR9.16	Quantity		Vendor to specify	

Vendor Name :
Signature :
Date :

Project :
Enquiry No.:
P.O.No. Date:

Description of the item:

Ref no	Description	Spec clause no	As per spec	As quoted
CR10.0	**End stopper-UHC**			
CR10.1	Provided		Vendor to specify	
CR10.2	Type		Vendor to specify	
CR11.0	Clearance between Runway beam bottom & Crane girder top - in mm.		Vendor to specify	
HO1.0	**Trolley With Hoist(TWH)**			
HO1.1	Capacity - in tons	Annexure-I		
HO1.2	Lift - in m.	Annexure-I		
HO1.3	Headroom - in mm.	Annexure-I		
HO1.4	Approximate Hoist dimension	Vendor drawing	Vendor to specify	
HO1.5	Operating floor - in m.	BHEL drawing	Vendor to confirm	
HO1.6	Approximate weight - in Kgs.		Vendor to specify	
HO1.7	Service class of crane/hoist	2.4	Class 2	
HO1.8	All welding	2.4	IS 1024	
HO1.9	Welder qualification	2.4	AWS D1.1/ASME section IX	
HO2.0	**Hoist speed-TWH**			
HO2.1	Maximum speed - in m/min		Vendor to specify	
HO2.2	Minimum speed - in m/min		Vendor to specify	
HO3.0	**Cross travel speed-TWH**			
HO3.1	Maximum speed - in m/min		Vendor to specify	
HO3.2	Minimum speed - in m/min		Vendor to specify	
HO4.0	**Trolley -TWH**	2.4.9		
HO4.1	Type	4 - wheeled-Min	Vendor to specify	
HO4.2	Design to suit monorail size		Vendor to confirm	
HO5.0	**Trolley wheels-TWH**	2.4.5		
HO5.1	Type	3.1.5	Spur geared	
HO5.2	Wheel diameter - in mm.	3.1.5	Vendor to specify	
HO5.3	Material of construction	3.1.5	Cast / forged steel	
HO5.4	Hardness	3.1.5	200 BHN Max.	
HO5.5	Quantity	3.1.5	Vendor to specify	
HO6.0	**Wire rope-TWH**	2.4.2		
HO6.1	Code	2.4.2	IS 2266 / IS 2365	
HO6.2	Rope construction	2.4.2	6 strands of 37/36	
HO6.3	Rope diameter - in mm.	2.4.2	Vendor to specify	
HO6.4	Number of falls	2.4.2	Vendor to specify	
HO6.5	Ultimate tensile strength	2.4.2	Vendor to specify	
HO6.6	Whether wire rope has sufficient extra length to retain two full wraps on the drum	Yes / No	Vendor to confirm	
HO6.7	Rope material	2.4.2	Galvanised	
HO6.8	Core material	2.4.2	Vendor to specify	

Vendor Name :
Signature :
Date :

Project :
Enquiry No.:
P.O.No. Date:

Description of the item:

Ref no	Description	Spec clause no	As per spec	As quoted
HO6.9	Breaking load	2.4.2	5 times SWL	
HO7.0	**Rope drum-TWH**	2.4.3		
HO7.1	Diameter - in mm.	2.4.3	Vendor to specify	
HO7.2	Material of construction	2.4.3	Cast / weld steel	
HO7.3	Construction	2.4.3	Seamless/fabricated	
HO8.0	**Hook-TWH**	2.4.1		
HO8.1	Code	2.4.1.1	IS 15560	
HO8.2	Material (Forged)	2.4.1.6	IS 2004-35C8	
HO8.3	Minimum tensile strength	2.4.1.6	50-62 kg/mm ²	
HO8.4	Capacity - in tons	2.4.1	Vendor to specify	
HO8.5	Safety latch provided in the hook	2.4.1.2	Vendor to confirm	
HO8.6	Bearing in the swivel hook	2.4.1.2	Thrust bearing	
HO8.7	Locking arrangement of hook	2.4.1.5	Forged lug/clamp latch	
HO8.8	Examination	2.4.1.7	MPI / LPI	
HO8.9	Hooks > 5 ton capacity	2.4.1.7	UT	
HO8.10	Proof load test as per	2.4.1.7	IS 15560	
HO9.0	**Bearing for Cross Travel-TWH**	2.4.7		
HO9.1	Type	2.4.7	Vendor to specify	
HO9.2	Size	2.4.7	Vendor to specify	
HO9.3	Make	2.4.7	FAG/SKF/Tata/NBC	
HO10.0	**Bearing for Hoist-TWH**	3.1.7		
HO10.1	Type	3.1.7	Vendor to specify	
HO10.2	Size	3.1.7	Vendor to specify	
HO10.3	Make	3.1.7	FAG/SKF/Tata/NBC	
HO11.0	**Hoist Motors - TWH**	2.6.0	Conform to IS 325	
HO11.1	Motor Rating		Vendor to specify	
HO11.2	motor Type		Vendor to specify	
HO11.3	Motor Make		Vendor to specify	
HO11.4	Duty factor	2.6.4	40% CDF	
HO11.5	Duty cycle	2.6.4	Continuous/S3/S4	
HO11.6	Enclosure	2.6.14	IP 55	
HO11.7	Power supply (equipment)		415 VAC; 50Hz	
HO11.8	Quantity			
HO12.0	**Cross travel motor-TWH**	2.6.0	Conform to IS 325	
HO12.1	Motor Rating		Vendor to specify	
HO12.2	motor Type		Vendor to specify	
HO12.3	Motor Make		Vendor to specify	
HO12.4	Duty factor	2.6.4	40% CDF	
HO12.5	Duty cycle	2.6.4	Continuous/S3/S4	
HO12.6	Enclosure	2.6.14	IP 55	
HO12.7	Power supply (equipment)		415 VAC; 50Hz	
HO12.8	Quantity			

Vendor Name :
Signature :
Date :

Project :
Enquiry No.:
P.O.No. Date:

Description of the item:

Ref no	Description	Spec clause no	As per spec	As quoted
HO13.0	**Limit switch-Hoist**	2.12.4		
HO13.1	Type	2.12.4	Heavy duty	
HO13.2	Make	2.12.4	BCH/Omron/Nucon/ Festo/ Siemens/ Kaycee/ EMM/ SOC	
HO13.3	Rating	2.12.4	Vendor to specify	
HO14.0	**Limit switch for CT-TWH**	2.12.4		
HO14.1	Type	2.12.4	Heavy duty	
HO14.2	Make	2.12.4	BCH/Omron/Nucon/ Festo/ Siemens/ Kaycee/ EMM/ SOC	
HO14.3	Rating	2.12.4	Vendor to specify	
HO15	Approach platform at hoist for panel, motor & brake		Vendor to confirm	
DSL.1.0	**DSL system for Long Travel**	2.5		
DSL.1.1	Travel length - Wire / Cable trolley	Annexure-I		
DSL.1.2	Type	Cable trolley/Taut wire loop		
DSL.1.3	Cable length - Fixed cable		Vendor to specify	
DSL.1.4	Cable length - Tailing cable		Vendor to specify	
DSL.1.5	Cable size & rating		Vendor to specify	
DSL.1.6	***Cable tolley type***	2.5.1		
DSL.1.6.1	Type of trolley	2.5.1.1.b	4 - wheeled type	
DSL.1.6.2	Material of construction	2.5.1.1.b	Vendor to specify	
DSL.1.6.3	Diameter of trolley wheel	2.5.1.1.b	Min. dia 40 mm	
DSL.1.6.4	Type of Bearing used		Double seal roller/ball	
DSL.1.6.5	Make of bearing used		FAG/SKF/Tata/NBC	
DSL.1.6.6	Trolley track	2.5.1.1.a	Tee track/I-Beam	
DSL.1.6.7	Loop size	2.5.1.1.b	Vendor to specify	
DSL.1.6.8	Link chain size / diameter	2.5.1.1.b	Vendor to specify	
DSL.1.6.9	Pitch between two cable trolleys	2.5.1.1.b	Vendor to specify	
DSL.1.6.10	Supply of Earthing conductor	2.5.1.1.b	Vendor to confirm	
DSL.1.6.11	Provision of suitable supports	2.5.1.1.b	Vendor to confirm	
DSL.1.6.12	Arrangement drawing with the offer	2.5.1.1.b	Vendor to confirm	
DSL.1.7	***Taut wire loop type***	2.5.2		
DSL.1.7.1	Bracket size	2.5.2.1a	Vendor to specify	
DSL.1.7.2	Bracket material	2.5.2.1a	Vendor to specify	
DSL.1.7.3	Provision of end hook	2.5.2.1b	Vendor to confirm	
DSL.1.7.4	Reel insulator	2.5.2.1c	Ceramic	
DSL.1.7.5	Tieing arrangement	2.5.2.1c	Nylon rope/leather belt	
DSL.1.7.6	Steel wire rope	2.5.2.1d	IS 2266/Mini 6mm dia	
DSL.2.0	**DSL system for Cross Travel**	2.5		
DSL.2.1	Travel length - Wire / Cable trolley	Annexure-I		

Vendor Name :
Signature :
Date :

Project :
Enquiry No.:
P.O.No. Date:

Description of the item:

Ref no	Description	Spec clause no	As per spec	As quoted
DSL.2.2	Type	e trolley/Taut wire loop		
DSL.2.3	Cable length - Fixed cable			
DSL.2.4	Cable length - Tailing cable			
DSL.2.5	Cable size & rating			
DSL.2.6	***Cable tolley type***	2.5.1		
DSL.2.6.1	Type of trolley	2.5.1.1.b	4 - wheeled type	
DSL.2.6.2	Material of construction	2.5.1.1.b	Vendor to specify	
DSL.2.6.3	Diameter of trolley wheel	2.5.1.1.b	Mini dia 40 mm	
DSL.2.6.4	Type of Bearing used		Double seal roller/ball	
DSL.2.6.5	Make of bearing used		FAG/SKF/Tata/NBC	
DSL.2.6.6	Trolley track	2.5.1.1.a	Tee track/Auxiliary girder	
DSL.2.6.7	Loop size	2.5.1.1.b	Vendor to specify	
DSL.2.6.8	Link chain size / diameter	2.5.1.1.b	Vendor to specify	
DSL.2.6.9	Pitch between two cable trolleys	2.5.1.1.b	Vendor to specify	
DSL.2.6.10	Supply of Earthing conductor	2.5.1.1.b	Vendor to confirm	
DSL.2.6.11	Provision of suitable supports	2.5.1.1.b	Vendor to confirm	
DSL.2.6.12	Arrangement drawing with the offer	2.5.1.1.b	Vendor to confirm	
DSL.2.7	***Taut wire loop type***	2.5.2		
DSL.2.7.1	Bracket size	2.5.2.1a	Vendor to specify	
DSL.2.7.2	Bracket material	2.5.2.1a	Vendor to specify	
DSL.2.7.3	Provision of end hook	2.5.2.1b	Vendor to confirm	
DSL.2.7.4	Reel insulator	2.5.2.1c	Ceramic	
DSL.2.7.5	Tieing arrangement	2.5.2.1c	Nylon rope/leather belt	
DSL.2.7.6	Steel wire rope	2.5.2.1d	IS 2266/Mini 6mm dia	
COM.0.0	**Common to UHC & TWH**			
COM.I.1	**Brakes**	2.4.8		
COM.I.2	Type	2.4.8	ElectroMech friction shoe type/ Disc type/ Electromagnetic disc type/ Electro hydraulic thruster brake	
COM.I.3	Shoe Material	2.4.8	Vendor to specify	
COM.I.4	Make	2.4.8	Vendor to specify	
COM.I.5	Slip to speed	2.4.8	Vendor to specify	
COM.2.0	**Shaft**	2.4.6		
COM.2.1	Material	2.4.6	Vendor to specify	
COM.2.2	Hardness	2.4.6	175-250 BHN	
COM.2.3	Tensile strength		60 kg/mm ²	
COM.2.4	UT test	Dia>50 mm	ASMEVIII/Div 2	
COM.3.0	**Gears / Pinions**	2.4.4		
COM.3.1	Material	2.4.4	IS 3681/ BS 970	
COM.3.2	Hardness-Pinion (LT&CT)	2.4.4	250 BHN min.	
COM.3.3	Hardness-gears (LT&CT)	2.4.4	215 BHN min.	
COM.3.4	Hardness-Pinion (hoist)	2.4.4	285-300 BHN	

Vendor Name :
Signature :
Date :

Project :
Enquiry No.:
P.O.No. Date:

Description of the item:

Ref no	Description	Spec clause no	As per spec	As quoted
COM.3.5	Hardness-gears (hoist)	2.4.4	250 -265BHN	
COM.3.6	BHN difference - gear < pinion	2.4.4	35 BHN Min.	
COM.3.7	Type (for LT & CT)	2.4.4	Spur/Helical	
COM.3.8	Type (for hoist)	2.4.4	Spur/Helical	
COM.3.9	Lubricant details	2.4.4	Vendor to specify	
COM.3.10	Trade name	2.4.4	Vendor to specify	
COM.3.11	Quantity/Peiodicity	2.4.4	Vendor to specify	
COM.3.12	LPI/MPT tests	2.4.4	Vendor to specify	
COM.4.0	**Fasteners**	2.5.2.1g		
COM.4.1	Grade	2.5.2.1g	Precision/high tensile	
COM.4.2	Galvanising	2.5.2.1g	As per IS	
COM.4.3	Special bolts/fasteners	2.5.2.1g	Details in drawing	
COM.5.0	**Controls/Interlocks-UHC&TWH**	2.7.0		
COM.5.1	Type of control cabinet	2.7.0	Wall mounting	
COM.5.2	Location of control cabinet	2.7.0	Vendor to specify	
COM.5.3	Control power supply	2.7.0	110VAC/50Hz	
COM.5.4	Control cabinet & Pendent enclosure	2.7.0	IP 55 as per IS13947	
	Push Button	2.9.3	Siemens/ L&T/ GE/ Telemechanic/ BCH/ Technic	
COM.5.5	Control wiring diagram	2.7.0	To be enclosed	
COM.5.6	Relays	2.12.1	Siemens/BCH/L&T/ GE/Telemechanic	
COM.5.7	Tranformers	2.12.2	SE/Kappa/Ind coil/ JE/ Vikas/ Logicstat	
COM.5.8	Motors	2.12.3	NGEF/Kirloskar / Siemens/Crompton greaves/ Bharat Bijlee/ Autolec/ GEC/ Alstom	
COM.5.9	Limit switches	2.12.4	BCH/Omron/Nucon/ Festo/ Siemens/ Kaycee/ EMM/ SOC	
COM.5.10	Power & control cable	2.12.5	CMI Ltd/Delton cables/ Fixwell/ Pushincords/ Asian cablews/ Cable corporation of India/ Finolex/ Incab/Universal/ PolycabCCI	
COM.5.11	Cabling	2.10		
COM.5.12	Code	2.10	IS 694 / IS 9968	
COM.5.13	Power cable	2.10	Copper PVC flexible / Elastomer insulated flexible	
COM.5.14	Power cable - conductor size	2.10	Vendor to specify	
COM.5.15	Control cable	2.10	Armoured	

Vendor Name :
Signature :
Date :

Project :
Enquiry No.:
P.O.No. Date:

Description of the item:

Ref no	Description	Spec clause no	As per spec	As quoted
COM.5.16	Control cable - conductor size	2.10	Vendor to specify	
COM.5.17	Provision of spare cores	2.10	20 % spare cores	
COM.5.18	Internal wiring	2.10	Vendor to confirm	
COM.5.19	Painting	2.10	Vendor to confirm	
COM.6.0	**Painting**	4.18	Annexure II	
COM.6.1	Vendor's Compliance of painting		Vendor to confirm	
COM.6.2	Colour scheme		Vendor to confirm	
COM.6.3	Vendor's Compliance of colour scheme		Vendor to confirm	
COM.7.0	**Packing**	4.0		
COM.7.1	Vendor's Compliance of packing		Vendor to confirm	
COM.8.0	**Inspection & Testing**	4.0		
COM.8.1	Vendor's Compliance of above		Vendor to confirm	
COM.9.0	Load test at site /vendor supervision	5.9.2	Vendor to confirm	
COM.10.0	**Drawings**	3.3.9		
COM.10.1	Drawings shall be made in AUTOCAD	3.3.9	Vendor to confirm	
COM.10.2	Drg BOM to match with packing slip	3.3.9	Vendor to confirm	
COM.10.3	Drawing CD to be submitted	3.3.9	Vendor to confirm	
COM.11.0	**Guarantee**	9.0	18 / 24 months	

DATA SHEET - AC MOTORS (Non-Flame proof)

Attach separate data sheet for each motor under supply

MO.1	Application	
MO.2	Manufacturer	
MO.3	Type, frame size & degree of protection	
MO.4	Rated output in Kw & rated speed	
MO.5	Full load current	
MO.6	Full load efficiency & power factor	
MO.6.1	Duty cycle	
MO.7	Rated torque	
MO.7.1	Starting current	
MO.8	Starting torque in % of full load torque	
MO.9	Pull up torque in % of full load torque	
MO.10	Pull out torque in % of full load torque	
MO.11	No load starting time	
MO.12	Stator winding connection	
MO.13	Type & no. of terminals brought out	
MO.14	Resistance / phase	
MO.15	Qty. & power consumption of space heaters	

Vendor Name :
Signature :
Date :

Project :
Enquiry No.:
P.O.No. Date:

Description of the item:

Ref no	Description	Spec clause no	As per spec	As quoted
MO.16	Gland size for space heaters			
MO.17	Cable entry			
MO.18	Cable gland - Double compression			
MO.19	GD^2 of motor			
MO.20	Total weight of motor			
MO.21	Anticipated bearing life			
MO.22	Method of connection to driven equipment			
Drawings/Documents to be furnished along with the offer				
D.1.0	Drawings/documents	6.1.0	3 sets of each items	
D.1.1	GA / Assy. of Cranes	3.1.1	Vendor drawing number	
D.1.2	GA / Assy of Hoists	3.1.1	Vendor drawing number	
D.1.3	GA / Assy for DSL system	3.1.1	Vendor drawing number	
D.1.4	Electrical Wiring / Circuit diagram	3.1.2	Vendor drawing number	
D.1.5	Technical specification of system	3.1.6	Vendor to specify	
D.1.6	Exclusion list	3.1.8	Vendor to specify	
Drawings/Documents to be furnished after award of contract				
(Vendor to confirm the submission of the following documents)				
D.2.0	Drawings/documents	3.2		
D.2.1	Quality plan for Purchaser's approval	3.2.1		
D.2.2.0	Dimensional drawing with BOM for:	3.2.2	Purchaser's approval	
D.2.2.1	Under hung crane		Purchaser's approval	
D.2.2.2	Trolley with Hoist		Purchaser's approval	
D.2.2.3	Down shop leads		Purchaser's approval	
D.2.2.4	Cable trolley		Purchaser's approval	
D.2.2.5	Control panel		Purchaser's approval	
D.2.2.6	Wiring diagram		Purchaser's approval	
D.2.3	Data sheet for cranes & hoists		Purchaser's approval	
D.2.4	Calculation for the following:	3.2.4		
D.2.4.1	Hoist & Travel motor power	3.2.4.1	Purchaser's review	
D.2.4.2	Brake torque for each drive	3.2.4.2	Purchaser's review	
D.2.4.3	Brake selection for each drive	3.2.4.2	Purchaser's review	
D.2.4.4	Main hoist rope selection	3.2.4.3	Purchaser's review	
D.2.4.5	CT/LT wheel load details	3.2.4.4	Purchaser's review	
D.2.4.6	CT/LT wheel load dia selection	3.2.4.4	Purchaser's review	
D.2.5	Details of gear box		Purchaser's review	
D.2.6	Details of Hooks		Purchaser's review	
D.2.7	Details of couplings		Purchaser's review	
D.2.8	Performance certificate		Purchaser's record	
D.2.9	O&M manual to contain the following:	3.3.9.3		
D.2.9.1	Storage details	3.3.9.4	Vendor to confirm	
	Installation procedure	3.3.9.4	Vendor to confirm	
	Erection procedure	3.3.9.4	Vendor to confirm	

Vendor Name :
Signature :
Date :

Project :
Enquiry No.:
P.O.No. Date:

Description of the item:

Ref no	Description	Spec clause no	As per spec	As quoted
	Drawings	3.3.9.4	Vendor to confirm	
	Lubrication schedule	3.3.9.4	Vendor to confirm	
	Spares list	3.3.9.4	Vendor to confirm	
	Motor data sheet	3.3.9.4	Vendor to confirm	
	Operation & trouble shooting	3.3.9.4	Vendor to confirm	
	No of copies	3.3.9.4	26 copies	
	CDs copied with drawings	3.3.9.5	Vendor to confirm	
Test certificates to furnished along with the supply				
(Vendor to confirm the submission of the following documents)				
TC.1.0	**Test certificates**	3.3		
TC.1.1	Physical/Chemical,NDE,Hardness	3.3.1	Vendor to confirm	
TC.1.1.1	Trolley wheel	3.3.1	Vendor to confirm	
TC.1.1.2	Crane wheel	3.3.1	Vendor to confirm	
TC.1.1.3	Wire rope	3.3.1	Vendor to confirm	
TC.1.1.4	Pulley	3.3.1	Vendor to confirm	
TC.1.1.5	Hooks	3.3.1	Vendor to confirm	
TC.1.1.6	Gears & Pinions	3.3.1	Vendor to confirm	
TC.1.1.7	Shafts	3.3.1	Vendor to confirm	
TC.1.2	TWHoist load test	4.3	Vendor to confirm	
TC.1.3	Brake test for LT/CT/Hoist	4.4	Vendor to confirm	
TC.1.4	Testing of torque/limit switch	4.5	Vendor to confirm	
TC.1.5	Over load relay test	4.6	Vendor to confirm	
TC.1.6	Alignment test	4.7	Vendor to confirm	
TC.1.7	Crane load test	4.11	Vendor to confirm	
TC.1.8	Hook type & load test	4.13.2	Vendor to confirm	
TC.1.9	Deflection test for crane	4.14.2	Vendor to confirm	
TC.1.10	Cross travel movement test	4.9	Vendor to confirm	
TC.1.11	Dimensional checks		As per approved QP	
TC.1.12	Wire rope load test	4.2	Vendor to confirm	
TC.1.13	NDT as per Quality plan & Specification		Vendor to confirm	
TC.1.14	Material test certificates		Vendor to confirm	
TC.1.15	Insulator test on electrical circuit	4.16.1	Vendor to confirm	
TC.1.16	Functional test/power&control circuit	4.16.3	Vendor to confirm	
TC.1.17	High volt test on electrical circuit	4.16.4	Vendor to confirm	
TC.1.18	Motor routine, type & weather protection TCs.	4.16.5	Vendor to confirm	
TC.1.19	Control panel & Pendent I R, HV & physical inspection record and weather protection TC.	4.16.7	Vendor to confirm	

Vendor Name :
Signature :
Date :

Annexure – IV Hoist Data Sheet

MOTOR DATASHEET		
PROJECT		
PO REFERENCE		
SNO	**DESCRIPTION**	**VALUE**
	For Hoist Application (description/capacity)	
A.	**GENERAL**	
1.	Manufacturer & Country of origin.	
2.	Equipment driven by motor	
3.	Motor type (Hoisting motor / Cross travel motor)	
4.	Motor Rating	
5.	Quantity	
B.	**DESIGN AND PERFORMANCE DATA**	
1.	Frame size	
2.	Type of duty	
3.	Type of enclosure /Method of cooling/ Degree of	
4.	Applicable standard to which motor generally conforms	
5.	Efficiency class	
6.	Type of mounting	
7.	Direction of rotation as viewed from DE END	
8.	Standard continuous rating at 40 deg. C. ambient temp. as per Indian Standard (KW)	
9.	Derated rating for specified normal condition i.e. 50 deg. C ambient temperature (KW)	
10.	Maximum continuous load demand of driven equipment in KW	
11.	Rated Voltage (volts)	
12.	Permissible variation of :	
	a. Voltage (Volts)	
	b. Frequency (Hz)	
	c. Combined voltage and frequency	
13.	Rated speed at rated voltage and frequency(RPM)	

Vendor's Name
Signature & Seal
with date

14.	At rated Voltage and frequency:	
	a. Full load current	
	b. No load current	
15.	Power Factor at	
	a. 100% load	
	b. No load	
	c. Starting.	
16.	Efficiency at rated voltage and frequency,	
	a.100% load	
	b. 75% load	
	c. 50% load	
17.	Starting current (amps) at	
	a. 100 % voltage	
	b. 85% voltage	
	c. 80% voltage	
18.	Minimum permissible starting Voltage (Volts)	
19.	Starting time with minimum permissible voltage	
	a. Without driven equipment coupled	
	b. With driven equipment coupled	
20.	Safe stall time with 100% and 110% of rated voltage	
	a. From hot condition	
	b. From cold condition	
21.	Torques :	
	a. Starting torque at min. permissible voltage(kg-mtr.)	
	b. Pull up torque at rated voltage.	
	c. Pull out torque	
	d. Min accelerating torque (kg.m) available at lowest permissible starting voltage	
	e. Rated torque (kg.m)	
22.	Stator winding resistance per phase (ohms at 20 Deg.C.)	
23.	GD^2 value of motors	

Vendor's Name
Signature & Seal
with date

24.	No of permissible successive starts when motor is in hot condition.	
25.	Locked Rotor KVA Input	
26.	Locked Rotor KVA/KW	
27.	Vibration limit :Velocity (mm/s)	
28.	Noise level limit (dBA)	
C.	**CONSTRUCTIONAL FEATURES**	
1.	Stator winding insulation	
	a. Class & Type	
	b. Winding Insulation Process	
	c. Tropicalized	Yes
	d. Temperature rise over specified maximum ambient temperature of 50 deg. C	
	e. Method of temperature measurement	
	f. Stator winding connection	
2.	Main Terminal Box	
	a. Type	
	b. Location(viewed from NDE side)	
	c. Entry of cables(bottom/side)	
	d. Recommended cable size(To be matched with cable size envisaged)	
	e. Fault level (MVA),Fault level duration(sec)	
	f. Cable glands & lugs details (shall be suitable for power cable)	
3.	Type of DE/NDE Bearing	
4.	Motor Paint shade	
5.	Weight of	
	a. Motor stator (KG)	
	b. Motor Rotor (KG)	
	c. Total weight (KG)	
D.	**List of accessories.**	
1.	Grounding pads	
	i) No and size on motor body	
	ii) Nos on terminal Box	
2.	Any other fitments	
E.	**List of curves.**	

Vendor's Name
Signature & Seal
with date

1.	Torque speed characteristic of the motor	
2.	Thermal withstand characteristic	
3.	Starting. current Vs. Time	
4.	Starting. current Vs speed	
5.	P.F. and Efficiency. Vs Load	

Vendor's Name
Signature & Seal
with date

5.0 PROJECT RELATED INFORMATIONS

Project Name : Yadadri 5X800 MWTPS(1823-27)

Enquiry No. / P.O.No. :

Sl.No.	Description	Specification	Vendor Confirmation Yes / No
5.1	Hoist, Crane & DSL Parameter	Refer Annexure-I	
5.2	Painting schedule & Special requirements	Refer Customer approved painting schedule as attached.-Handling System	
5.3	Power & Control cable code	IS 1554 part(1)	
5.3.1	Power supply	415V,AC,3PH,50Hz	
5.3.2	Control supply	110V,AC,50Hz	
5.4	Commissioning Spares	Vendor to specify	
5.5	2 Years recommended spares	Vendor to specify	
5.6	Data Sheet	(Annexure-III) Vendor to fill and submit	
5.7	G.A. Drawings (for hoists, cranes, DSL, Wiring diagram, pendant etc.)	Vendor to submit	
5.8	Motor Data Sheet	(Annexure –IV) Vendor to fill and submit	
5.9	Special Project requirement	VOLUME III F SECTION III MISCELLANEOUS HOISTS OF KOTHAGUDEM PROJECT WHICH IS APPLICABLE TO YADADRI PROJECT(attached)	

Note: 1. Deviation in the above requirements shall reject the offer.
2. If required, please add more sheets.

Engineering **Quality** **Purchase** **Vendor**

VOLUME : IIIF

SECTION-III

MISCELLANEOUS HOISTS

CONTENT

CLAUSE NO.	DESCRIPTION
1.00.00	GENERAL INFORMATION
2.00.00	CODES AND STANDARDS
3.00.00	SCOPE OF WORK
4.00.00	SPECIFIC DESIGN REQUIREMENTS
5.00.00	DESIGN AND CONSTRUCTION
6.00.00	INSPECTION AND TESTING
7.00.00	DRAWINGS, DATA AND INFORMATION

ATTACHMENT

ANNEXURE-I	LIST OF LOCATION FOR MONORAIL HOISTS

VOLUME : IIIF

SECTION-III

MISCELLANEOUS HOISTS

1.00.00 GENERAL INFORMATION

1.01.00 The hoists will be used for erection and maintenance of various equipment in different buildings.

1.02.00 Hoists are divided into two separate groups - (a) Hand operated and (b) Electric operated.

2.00.00 CODES AND STANDARDS

The design, manufacture and testing of the equipment covered under this specification shall conform to the latest editions of the following Indian Standards:

2.01.00	IS : 3832	:	Specification for Hand Operated Chain Pulley-blocks.
2.02.00	IS : 807	:	Code of Practice for Design, Manufacture, Erection and Testing (Structural Portion) of Cranes and Hoists.
2.03.00	IS : 6216	:	Short link Chain, Grade T(8) for Pulley-blocks & other Lifting Appliances.
2.04.00	IS : 4164	:	Lifting ‘C’ Hooks with Eye Capacity upto 25 tonnes.
2.05.00	IS : 2429 (part -I)	:	Non-calibrated Load Chain for Lifting Purposes.
2.06.00	IS : 3938	:	Specification for Electric Wire Rope Hoists. and other Indian Standards referred to in the above standards.

3.00.00 SCOPE OF WORK

3.01.00 Hoists shall be provided in all areas where any equipment/component weighing above 500 kg is installed and needs to be handled for maintenance purposes. Number of monorail beams shall be such that the centre line of the hoist and the centre line of equipment to be handled shall be not more than 500 mm.

~~3.01.01~~ ~~The location and no. of hoists is to be finalised during detailed engineering. Final arrangement is subject to approval of Owner/Consultant.~~

~~3.01.02~~ ~~Monorail hoists shall at least be provided in the areas mentioned in Annexure-I. The list is indicative only and not an exhaustive one.~~

3.02.00 All drive motors and driving gears as necessary.

3.03.00 Limit switches for electrical hoist as necessary.

3.04.00 Trailing cable with all supporting fixtures as necessary for electric hoists.

3.05.00 Pendent control station with all accessories for electric hoists.

3.06.00 Lifting lug, eye bolts etc., for handling hoist parts.

3.07.00 Protection guard as specified.

3.08.00 Lifting hook block assembly for hoists.

4.00.00 **SPECIFIC DESIGN REQUIREMENTS**

~~4.01.00~~ ~~Lifting capacity~~

~~4.01.01~~ ~~Capacity of each hoist shall be 1.2 times the maximum working load.~~

~~4.01.02~~ ~~Hoists of capacity upto 5 tones shall be manual hoists.~~

~~Hoists of capacity above 5 tones shall be electric hoists.~~

~~4.02.00~~ ~~**Effort for Mechanical Hoists**~~

~~4.02.01~~ ~~Hoisting~~

~~Hoisting effort for hoists upto 3 tones capacity shall not be more than 20 kg.~~

~~Hoisting effort for hoists above 3 tones capacity shall not be more than 25 kg~~

~~4.02.02~~ ~~Trolley Motion~~

~~Effort for trolley motion for hoists upto 3 tones capacity shall not be more than 15 kg.~~

~~Effort for trolley motion for hoists above 3 tones capacity shall not be more than 20 Kg.~~

~~4.02.03~~ ~~For Electric operated hoist both hoisting and trolley motion shall be motor operated.~~

~~4.03.00~~ ~~**Lift**~~

~~4.03.01~~ ~~Lift above operating floor~~

~~Highest position of the hook shall be such that during operation of hoists, the vertical distance between bottom of any equipment handled and top of any permanent structure or equipment in the operating area shall be at least one metre.~~

~~4.03.02~~ ~~Approach below operating floor~~

~~To be decided by the Bidder for safe and reliable handling of any equipment above half ton below the operating floor~~.

~~4.04.00~~ ~~**Length of Monorail Hoist**~~

~~To be decided by the Bidder depending on the floor and machine layout. The horizontal distance between the centre line of the hoist and centre line of any installed equipment in its operating shall not be more than half metre.~~

5.00.00 **DESIGN AND CONSTRUCTION**

5.01.00 All parts requiring replacement or lubrication shall be easily accessible without the need for dismantling of other equipment and structures.

Robust construction and ample rating merging which experience has shown to be necessary shall be ensured throughout manufacture.

5.02.00 All components of hoists of identical capacity and duty shall be interchangeable. The hoists of identical capacity and duty shall be identical in all respects unless otherwise required. The hoist design shall be such that these can be quickly removed from one monorail beam and fixed on another beam without disassembling major components.

5.03.00 All machinery and equipment included under this specification must be equipped with safety devices and clearances to comply with recognized standards and specification requirements.

5.04.00 Cast iron parts wherever used, shall conform to IS:210 - FG 260. Also no wood or other combustible materials shall be used.

5.05.00 Defects in material like fractures, cracks, blowholes, laminations, pitting etc. are not allowed. Rectifications of any such flaw is permissible only with the approval of the Purchaser.

5.06.00 Each hoist shall be permanently and legibly stamped with the tag number, manufacturer's name, safe working load, grade of load chain (where applicable), range of lift etc.

~~5.07.00~~ ~~Load chain (where applicable) shall be of grade T(8) as per IS:6216 and Hand chain shall be as per IS:2429 (Part-I) grade 30.~~

~~5.08.00~~ ~~Wheels in trolley unit travel shall be single flanged with straight/tapper/barrel shaped tread to suit the monorail. Wheels should be preferably of forged steel construction. Material of construction for wheels of traversing block and hoist gear for hoist used in hazardous areas shall be of non-ferrous material to avoid spark during operation.~~

5.09.00 All gears shall be hardened and tempered steel with machine out teeth.

~~5.10.00~~ ~~**Hoist (Manually Operated)**~~

~~5.10.01~~ ~~Manually operated hoists shall be of spur gear chain pulley block type. It shall be suspended from the trolley by a hook. The design of the hoist shall conform to IS:3832 (Specification for hand operated chain pulley blocks). The hooks and brakes of hoist shall conform to the requirements stipulated in (a) and (b) below~~

~~a) Hooks shall conform to and IS:3832. The load hook shall be swievelling type fitted with a locking device.~~

~~b) The pulley blocks shall be fitted with an automatic mechanical load brake to prevent self lowering of load in all working positions. The load brake shall also allow smooth lowering of load without serious overheating.~~

~~c) All manually operated hoists, unless stated otherwise, shall be trolley suspended type.~~

~~5.10.02~~ ~~The trolley of hoists shall be manually operated.~~

~~5.10.03~~ ~~The hoists shall be of Mechanism class 2 as per IS:3832.~~

5.11.00 **Electric Hoist**

5.11.01 Electric hoist shall be electric wire rope trolley suspended type. The design, operation, testing of electric hoist shall conform to IS:3938 (Specification for electric wire rope hoist).

Minimum speed for hoisting shall be 3 m/min. and that of for trolley motion shall be 15 m/min.

5.11.02 Lifting hook shall conform to IS-4164 as applicable.

5.11.03 Wire rope for hoists shall conform to IS-2266.

5.11.04 Electro-mechanical brakes of fail to safety type shall be provided for hoist motion as well as per trolley motion for electrically driven trolley. Load brake shall allow smooth lowering of load and arrangement shall be such as it can not be released accidentally. Capacity of brake and other relevant data shall conform to IS:3938.

5.11.05 The trolley of the hoists shall be electrically driven.

5.11.06 For other components of hoist such as rope, sheave, drum, bearings, gears etc. stipulations of IS: 3938 shall be followed.

5.11.07 Motor shall be rated for duty S4. Service class of motor shall be "M8" as per IS:3177. Conditions given in IS:3938 for hoist motor shall be followed over and above the specification of electric motor in Volume-V. In case of any contradiction of the aforesaid standard and the motor specification, the conditions which are more stringent shall be considered. All the motors shall be suitable for reversing, frequent starting and braking. Motors shall be provided with suitable space heating arrangement.

5.11.08 Hoist shall be designed so that remote control can be effected by means of pendant push button switch from the operating floor. Operation, arrangement etc. of pendant push button switch shall conform to IS:3938.

5.11.09 Micro-speed attachment in hoist shall be provided if considered necessary by the Bidder.

5.11.10 The hoists shall be of mechanism class 2 as per IS-3938.

5.12.00 Ball and roller bearings of reputed make shall be used throughout.

5.13.00 Suitable lubrication system shall be provided for all gear drives.

5.14.00 **Other Electrical Items**

5.14.01 The cross conductor on monorail for power supply to the hoist shall be of festoon type flexible insulated cable conductors. All fixtures and accessories shall be provided by the Bidder for this purpose.

5.14.02 Necessary insulators, supports, clamps and all other accessories shall be provided as per standard design.

5.14.03 Each hoist shall be provided with a starter panel with protective relays.

5.14.04 One main isolating switch shall be used to cut-off the supply to the hoist assembly.

5.14.05 One main electro-magnetic contactor together with magnetic overload relay (hand reset) for each motor circuit shall be housed in the protection panel.

5.14.06 The operation of overload relay shall interrupt the main magnetic contactor.

5.14.07 Adequate short circuit protection shall be provided for main and individual circuits.

5.14.08 415V ± 10%, 3 Phase, 4 Wire, 50 Hz ± 5%, power supply for the hoist shall be arranged through MCCB unit mounted at standing height at a convenient location near each hoist.

5.14.09 Transformers to step down the voltage and rectifiers as necessary shall be provided by the Bidder.

5.14.10 All external and internal power, control and auxiliary circuit wiring of the electrical drive and accessories and panels shall be provided. The wiring shall be done with 1100 V grade PVC insulated stranded aluminium conductor cable of suitable size not less than 2.5 sq.mm nominal equivalent copper area of cross-section. All control and auxiliary circuit wiring shall be done with 1100 V grade PVC insulated, 2.5 sq.mm stranded copper conductor. Control wire terminations to the panels shall be made with compression type connectors. Multiway terminal blocks shall be furnished for terminating panel wiring and outgoing cable.

5.14.11 The hoist structure, motor frame and metal cases of all electrical equipment including metal conduit shall be effectively connected to earth. All grounding materials shall be supplied under this specification to grounding risers.

5.14.12 Single speed control shall be used for both hoist and trolley travel in each direction of motion.

6.00.00 INSPECTION AND TESTING

6.01.00 The manufacturer shall conduct all tests required to ensure that the equipment furnished shall conform to the requirements of the specification and in compliance with the requirements of the latest edition of IS:3832 or equivalent standards for manually operated hoists and shall be as per IS:3938 for electrically operated hoist.

6.02.00 All the mono-rail hoists shall also be tested at site as per the stipulation of relevant Indian Standards.

7.00.00 DRAWINGS, DATA AND INFORMATION

7.01.00 General arrangement drawings incorporating all dimensions information on head rooms, lift, wheel loads, hook suspension arrangement and other relevant data for all the hoists.

7.02.00 For Mandatory Spares, Spares required for erection and commissioning, Recommended Spares, Special Tools And Tackles, fixtures etc., as required for regular operation and maintenance of the equipment offered and supply of first charge of lubricating oil, inhibitor oil and also adequate quantity of the consumables, please refer Technical Specification Volume-II A.

7.03.00 Design calculation for selection of electric motor capacities for electric hoist.

7.04.00 Complete list of location, number and capacity of hoists provided.

Sl. No.	PGMA / Description	Surface Preparation & Surface Profile	Primer coat		Intermediate Coat		Finish coat			Total DFT µm (min)
			Paint	No. of coats	Paint	No. of coats	Paint	No. of coats	Shade	
8 PS73	<u>Components < 95° C –Other than components in Sl.No.3.</u> 07-409,431,460,461,462, 07-502,503, 531, 560; 12-906, 916,907; 17-919; 21-601,604; 24-350, 351, 352, 353,801,804, 24-813, 817, 818 24-825, 826, 836, 841, 842, 950; 30-233,234; 35-995; 36-396, 613; 39- 302; 41- 350,390, 500; 42-001,002,005,010,046,065,070,120,128, 42-152,154,157; 43-004,104,200; 45-200,801,802,804,805,858; 47-261,263,858; 48 – 022, 345, 355, 365; 65-736; 67-204,272,276,277, 283, 67-801,802,803; 95-088,089,091,485; 96-186; 97-097, 585,591,592; Duct plates, expansion joints 48-911,912; Handling equipments: 99-100,300, 400, 502,600; Impulse lines: 24-800 Seal air ducting: 43-005, 105; Cold Air:48-012,014, 112,114, 141 Tempering Air: 48-142,144;	SSPC-SP3/ Power Tool Cleaning	Red Oxide Zinc phosphate Primer (Alkyd Base) to IS 12744 DFT= 30µm per coat	2	--	--	Synthetic Enamel paint (Long Oil Alkyd) to IS 2932 DFT= 30µm per coat	2	Smoke Grey Shade No: 692 of IS5	120

Executive Director
Thermal Projects Construction
TSGENCO, Vidyut Soudha,
Khairatabad, Hyderabad-500 082.

0-99-502-40357

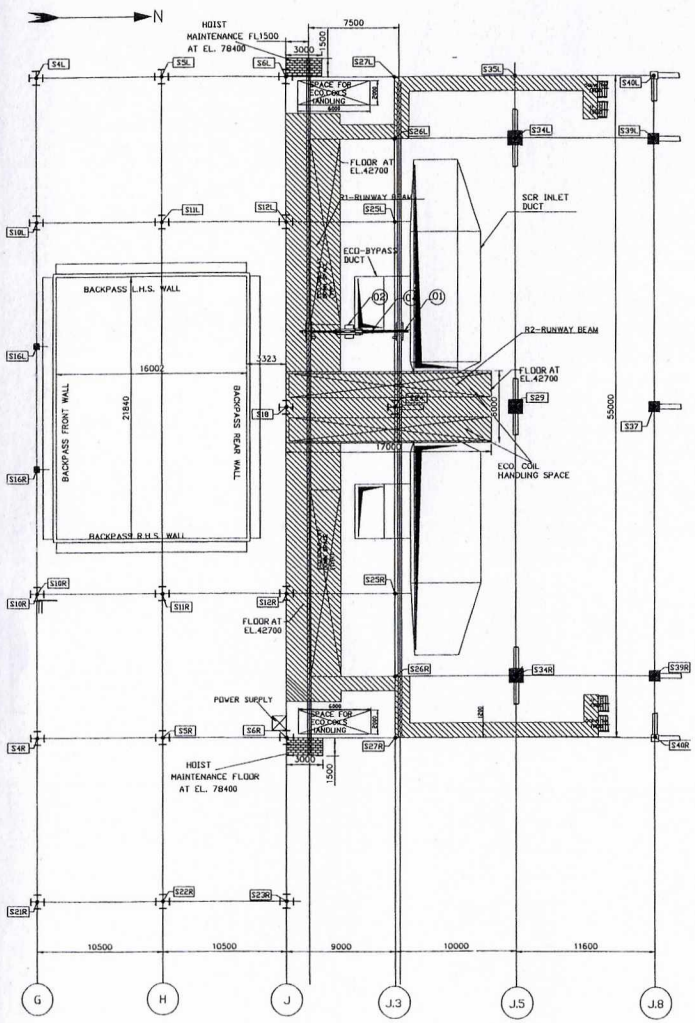

PLAN @EL.42700
SCALE :1:150

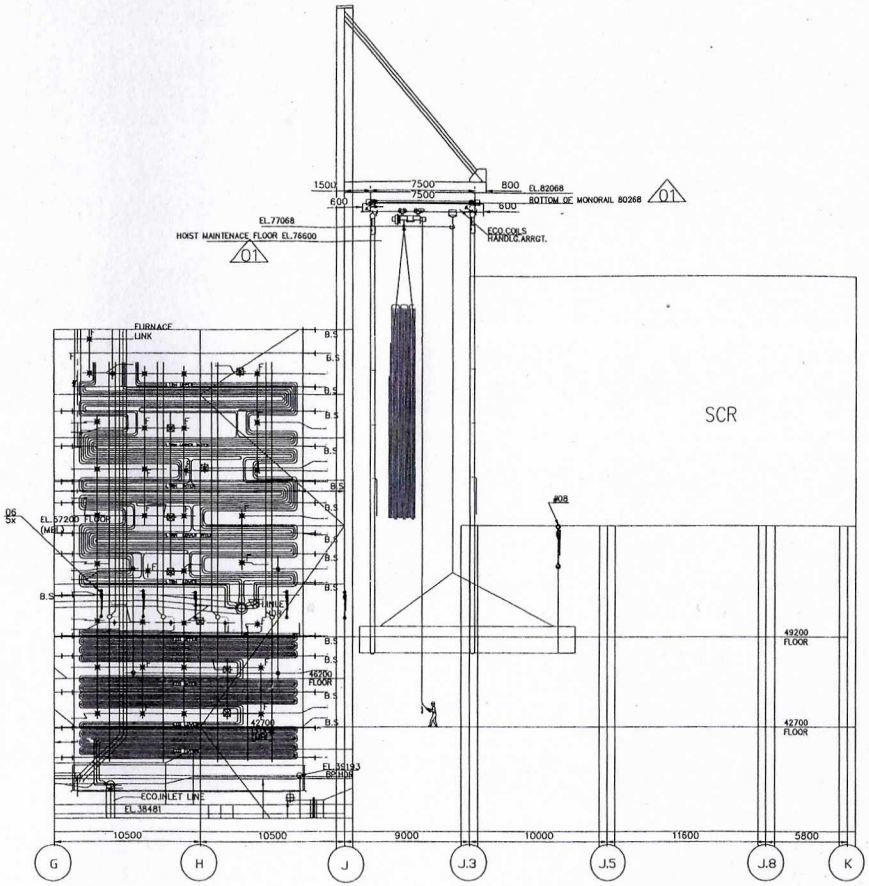

SECTIONAL SIDE ELEVATION-BACKPASS
SCALE :1:115

NOTES:

1. NO INTERCONNECTING STEEL OR VERTICAL BRACING BETWEEN COLUMN ROWS J & K FROM PLATFORM EL. 42700 TO EL. 82100 FOR MOVEMENT OF HOIST AND P.P. COILS TO DROP AREA.
2. ONE (1) ELECTRICALLY OPERATED UNDERHUNG HOIST SHALL BE PROVIDED FOR LOWERING/RAISING P.P. COILS TO/FROM GRADE.
3. TWO (2) TROLLEY TYPE MANUALLY OPERATED CHAIN HOISTS SHALL BE PROVIDED TO POSITION P.P. COILS ONTO PLATFORM EL. 42700 AND AID IN TILTING VERTICALLY FOR LOWERING TO GRADE.
4. FOUR (4) MANUALLY OPERATED CHAIN PULLEY BLOCKS SHALL BE PROVIDED FOR HANDLING P.P. COILS INSIDE BACKPASS ALONG WITH ONE (1) MANUALLY OPERATED CHAIN HOIST LOCATED OUTSIDE OF BACKPASS AT COLUMN ROW J. SUSPENDED EITHER ABOVE LTRH OR ECONOMIZER BANKS.
5. MAXIMUM OF SIX (6) PAIRS OF P.P. COILS MAY BE LOADED ON PLATFORM EL. 42700 AT A TIME.
6. SUITABLE LUGS AND PIPES SHALL BE SUPPLIED FOR POSITIONING THE MANUALLY OPERATED CHAIN PULLEY BLOCK AT COLUMN ROW J.
7. THE REQUIRED NUMBER OF LUGS ARE TO BE PROVIDED FOR SUSPENDING WIRE ROPES INSIDE THE BACKPASS FOR SUPPORTING THE MANUALLY OPERATED CHAIN PULLEY BLOCKS. THEY SHALL EITHER ATTACH TO THE BACKPASS SIDE WALLS OR PASS THROUGH AND ATTACH TO INTERCONNECTING BEAMS.
8. TWO (2) MONORAILS (R1 & R2) SHALL BE SUPPLIED FOR UNDERHUNG CRANE-LENGTH 58.0M.
9. MONORAIL BEAMS SHALL BE INSTALLED AND SHALL MAINTAIN LEVEL WITH EACH OTHER AND WITHOUT SLOPE THROUGHOUT.
10. VERTICALITY OF MONORAILS SHALL BE WITHIN ±2MM. SHIMS SHALL BE USED TO ENSURE SUCH.
11. REFER TO O&M MANUALS FOR DETAILED INSTRUCTIONS ON DISMANTLING/ASSEMBLY OF P.P. COILS.
12. QUANTITY FURNISHED IN THE DRAWING IS FOR ONE BOILER ONLY.
13. 3 NOS OF CHAIN PULLEY(ITEM NO 06) BLOCKS ARE TO BE USED IN TENDEM FOR DRAWING OUT COILS.
14. ITEM NO 08,CHAIN PULLEY BLOCK (CPB) SHALL BE USED TO HANDLE THE PULLED OUT COILS IN THE SCR REGION.THE CPB SHALL BE SUITABLY HUNG AT SITE. (02)

REFERENCE DRAWINGS:

1. 0-00-022-77364 GENERAL ARRANGEMENT-SIDE ELEVATION "EE"
2. 0-00-021-77349 FLOOR PLAN AT EL. 44000 (MBL-3).

NOTES TO SUPPORTING STRUCTURES/PE/FB:

1. NO INTERCONNECTING STEEL MEMBER OR VERTICAL BRACING BETWEEN 42.7M AND 82.1M.
2. RUNWAY BEAMS (R1&R2) LENGTH 58.0M EACH.

NOTES TO PRESSURE PARTS/PE/FB:

1. 3 SETS OF LUGS ARE REQUIRED PER BUNDLE.
2. REQUIRED NO.OF LUGS FOR ROPE TYING ARRANGEMENT SHALL BE DESIGNED AND SUPPLIED.
3. BEAMS FOR TYING UP THE ROPE BETWEEN COLUMNS AS PER PROCEDURE ARE TO BE PROVIDED.
4. FOR POSITIONING THE PULLEY BLOCK AT OUTSIDE THE SECOND PASS, SUITABLE LUGS AND PIPES SHALL BE DESIGNED AND SUPPLIED.

NOTES TO BHEL-PEM & C&I (FB):

A. POWER SUPPLY POINTS ARE TO BE PROVIDED AT 1.0M ABOVE OPERATING FLOOR AT EL. 42700 AT COLUMN S6R
B. POWER SUPPLY REQUIRED RATING 415V AC; 3 PHASE; 50Hz.

VARIANT NUMBER	ITEM NUMBER	DESCRIPTION	STD	DRAWING NUMBER	ITEM NO / VAR NO	MATERIAL CODE / MATERIAL SPECN	A/C/P	UNIT / DI	UNIT WEIGHT / QUANTITY	CS	ZONE
	08	CHAIN PULLEY BLOCK CAP.28T; LIFT 20M							200.000 / 1		
	07	WIRE ROPE DIA 28MM, L=35M							170.000 / 5		
	06	CHAIN PULLEY BLOCK CAP.6T; LIFT 28M							200.000 / 5		
	05	RATCHET LEVER WITH HOIST CAP.12T; LIFT 25M							900.000 / 1		
	04	MANUAL TROLLEY WITH CPB CAP.12T; LIFT 37M							700.000 / 2		
	03	DSL-CABLE TROLLEY TYPE TRAVEL LENGTH 58.0M							700.000 / 1		
	02	ELEC.TROLLEY WITH HOIST CAP.12T; LIFT 80M							3500.000 / 1		
	01	UNDERHUNG CRANE CAP.12T; SPAN 7.500M (OVERHANG 600MM ON BOTH SIDES)							3000.000 / 1		

HOIST VENDOR ITEMS

ITEM NO.	DESCRIPTION	QTY.	REMARKS
01	UNDERHUNG CRANE-ELEC., CAP. 12T, SPAN 11500mm	1	
02	TROLLEY WITH HOIST-ELEC., CAP. 12T, LIFT 80.0M	1	
03	DSL FOR UNDERHUNG CRANE-TRAVEL LENGTH 58.000M	1	
04	MANUAL TROLLEY WITH CHAIN PULLEY BLOCK-CAP. 12T, LIFT 37.0M	2	
05	RATCHET LEVER TYPE AUX. HOIST-CAP.12T, LIFT 25.0M	1	NOT SHOWN
06	CHAIN PULLEY BLOCK (LUG MOUNTED TYPE WITH LATCHING ARRANGEMENT FOR BOTH HOOKS)-CAP. 6T, LIFT 28.0M	5	
07	WIRE ROPE DIA 28; L35000	5	NOT SHOWN
08	CHAIN PULLEY BLOCK CAP 12T LIFT 20M	1	

Max weight of pair of coils to be handled

ECONOMISER	9100 Kg.

REV	DATE	ALTERED :	SAURABH KR SINGH
02	22.10.2018	CHD & APPD :	N.FAZIL

ZONE
1. Revised to accomodate SCR.
2. Item No 08 is added.

REV	DATE	ALTERED :	SAURABH KR SINGH
01	06.08.2018	CHD & APPD :	N.FAZIL

ZONE
1.BOTTOM OF MONORAIL IS INDICATED AT EL80268 BASED ON SS/PE/FB.
2.HOIST MAINTENANCE FLOOR IS INDICATED AT ELEVATION AT 76600.

CUSTOMER No.:1823 TO 1827

CAUTION: THE INFORMATION ON THIS DOCUMENT IS THE PROPERTY OF BHARAT HEAVY ELECTRICALS LIMITED AND IS TO BE USED ONLY FOR THE PURPOSE FOR WHICH IT IS SUBMITTED AND NOT TO BE REPRODUCED OR COPIED IN ANY WAY DETRIMENTAL TO THE INTEREST OF THE COMPANY.

CUSTOMER: TELANGANA STATE POWER GENERATION CORPORATION LTD
TELANGANA , INDIA
5 X 800 MW YADADRI TPS, NALGONDA

PROJECT : TATA CONSULTING ENGINEERS LIMITED
BANGLORE INDIA

BHARAT HEAVY ELECTRICALS LTD
HIGH PRESSURE BOILER PLANT
TIRUCHIRAPALLI-620014, INDIA

DEPT CODE	DEVN	SAURABH KUMAR	SK	23.12.17
HS	CHD	NADIRA FAZIL	NF	13.04.18
240	APPD	SHASHAWAT MORE	SM	16.04.18

TITLE PRESSURE PARTS HANDLING ARRANGEMENT
(ECO & LTRH)

DEPT.	SCALE 1:115	DRAWING NO.	0-99-502-40357
SIGN		SHEET 1 OF 1	REV. 02

DRAWING NO 1-99-100-40888

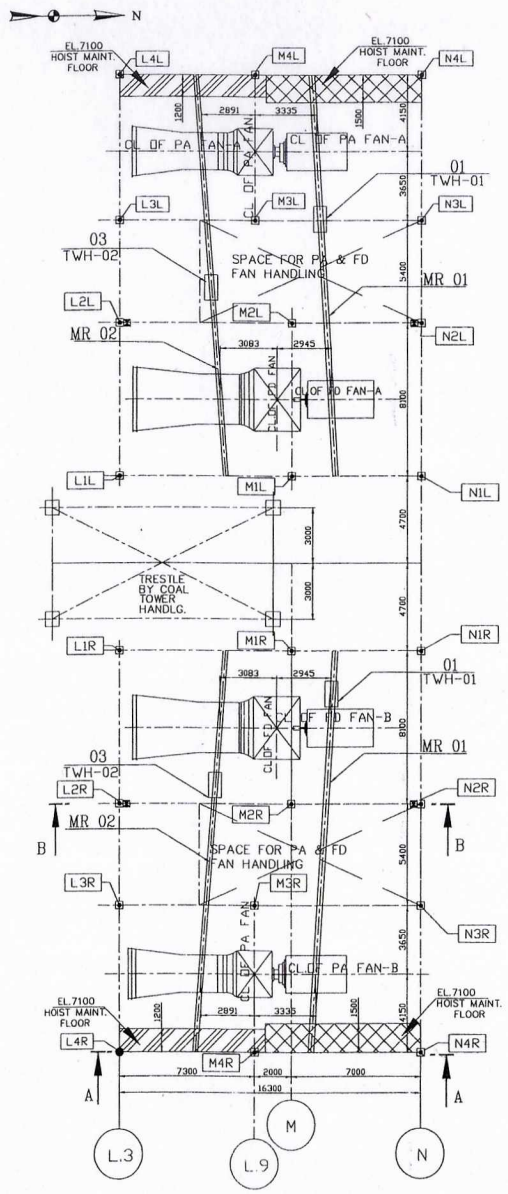

PLAN VIEW
SCALE 1:120

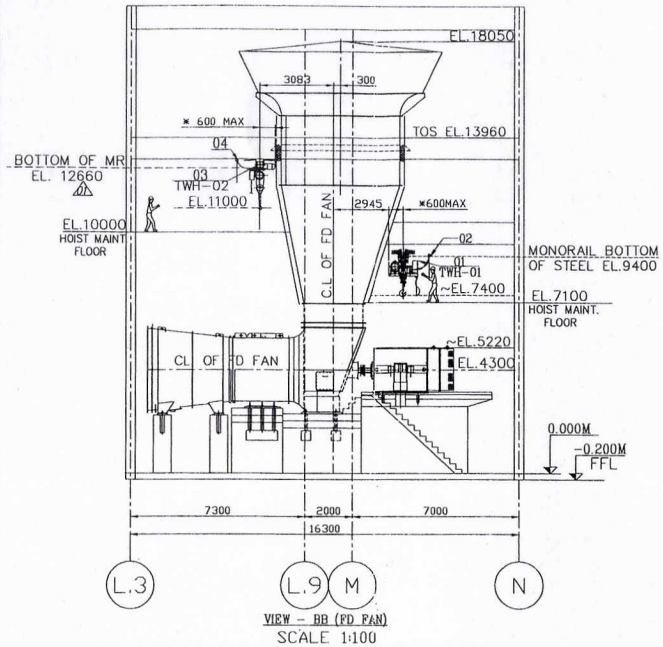

VIEW - BB (FD FAN)
SCALE 1:100

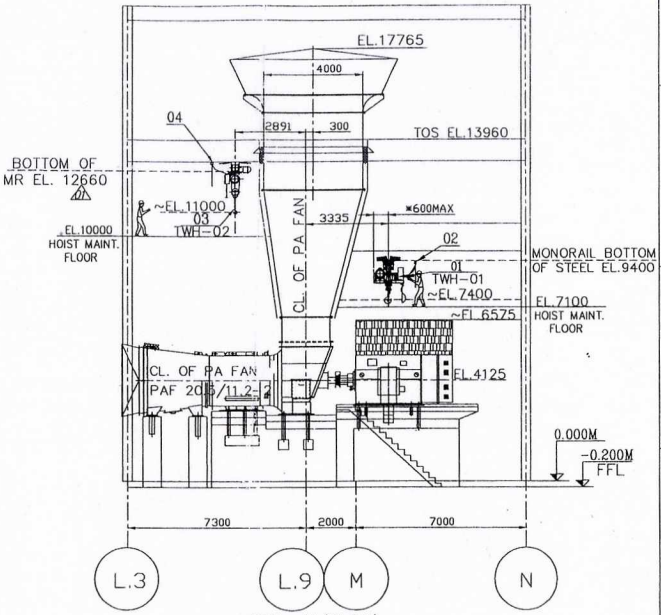

VIEW - AA (PA FAN)
SCALE 1:100

LEGEND

MR-01 - MONORAIL FOR F.D. AND P.A. FANS "A" MOTORS - QTY. TWO-21.340M
MR-02 - MONORAIL FOR F.D. AND P.A. FANS "A" ROTORS - QTY. TWO-21.362M

TWH-01 - TROLLEY WITH HOIST FOR F.D. AND P.A. FANS MOTORS - QTY. TWO, CAPACITY - 20 TONS, LIFT - 7.5 M.
TWH-02 - TROLLEY WITH HOIST FOR F.D. AND P.A. FANS ROTORS - QTY. TWO, CAPACITY - 5 TONS, LIFT - 11.5 M.

GENERAL NOTES:

A. REFERENCE DRAWINGS:
   01. LAYOUT OF COLD AIR DUCTING-COLD PRIM. AIR DUCT TO MILLS: 0-00-020-77327
   02. LAYOUT OF COLD AIR DUCT-SEC. AIR DUCT TO AIR HEATER: 0-00-020-77328
   03. GENERAL ARRANGEMENT OF PA FAN (PAF 20.5/11.2-2): 1-00-100-29052
   04. SILENCER ARRANGEMENT OF PA FAN: 2-00-100-30029
   05. GENERAL ARRANGEMENT OF FD FAN (FAF 26/12.5-1): 1-00-098-29050
   06. SILENCER ARRANGEMENT OF FD FAN: 2-00-098-30028
B. TROLLEY WITH HOISTS ARE ELECTRICALLY OPERATED.
C. QUANTITY FURNISHED IN DRAWING IS FOR ONE BOILER ONLY.
D. ALL THE ELEVATIONS ARE WITH RESPECT TO EL(+)0.00M,FINISHED GROUND FLOOR LEVEL OF TG BUILDING WITH,WHICH CORRESPONS TO RL 81.5M ABOVE MSL..

NOTES TO PEM, NEW DELHI:
1. POWER SUPPLY POINTS (⊠) ONE METER ABOVE GROUND LEVEL TO BE PROVIDED BY CUSTOMER.
2. POWER SUPPLY POINTS AT COLUMNS L2L, L2R AND N2L&N2R.
3. POWER SUPPLY REQUIRED RATING AT COLUMN L2L/L2R: 415V AC: 3 PHASE: 50Hz.
4. POWER SUPPLY REQUIRED RATING AT COLUMN N2L/N2R: 415V AC: 3 PHASE: 50Hz.

NOTES TO VENDORS:
1. SUPPLIER'S SCOPE STARTS AT CUSTOMER'S POWER SUPPLY POINT.
2. DIMENSIONS MARKED WITH (*) SHOULD BE STRICTLY MAINTAINED.
3. VENDORS ITEMS INCLUDE:
   A. FIXED POWER CABLE AND TRAILING CABLE.
   B. DSL TRAILING CABLE SYSTEM - CABLE TROLLEY - COMPLETE SET.
   C. SWITCH FUSE UNITS AND ALL ELECTRICAL ITEMS FOR TWH FROM POWER SUPPLY POINT.
   D. TROLLEY WITH HOIST - CAPACITY 20.0/5.0 TONS: LIFT 7.5/11.5M.

Max Load to be Handled (kgs)	
P.A. FANS MOTORS	16500
P.A. FANS ROTORS	2400
F.D.. FANS MOTORS	15000
F.D.. FANS ROTORS	2750

VARIANT NUMBER / ITEM NUMBER	DESCRIPTION	STD	DRAWING NUMBER	ITEM NO / VAR NO	MATERIAL CODE / MATERIAL SPECN	A/C/P	UNIT / DI	UNIT WEIGHT / QUANTITY	CS	ZONE
04	DSL-CABLE TROLLEY TYPE LENGTH : 21.362 M.				SUB-DELY		ST	300.000		
							L	2		
03	TWH-0.5 - ELEC.; CAP:5T LIFT : 11.5 M.				SUB-DELY		ST	1000.000		
							L	2		
02	DSL-CABLE TROLLEY TYPE LENGTH : 21.340M.				SUB-DELY		ST	300.000		
							L	2		
01	TWH-01 - ELEC.; CAP:20T LIFT : 7.5 M.				SUB-DELY		ST	2500.000		
							L	2		

CUSTOMER No.:1823 TO 1827

CUSTOMER: TELANGANA STATE POWER GENERATION CORPORATION LTD

PROJECT : YADADRI THERMAL POWER STATION-5X800MW NALGONDA DIST.,TELANGANA STATE, INDIA

BHARAT HEAVY ELECTRICALS LTD
HIGH PRESSURE BOILER PLANT
TIRUCHIRAPALLI-620014, INDIA

DEPT CODE		NAME	SIGN	DATE
HS 240	DRWN	R S YADAV	Sd.	23.12.17
	CHD	SAURABH KUMAR	Sd.	23.12.17
	APPD	NOORUL FAZIL	Sd.	23.12.17

TITLE: PA& FD FAN HANDLING ARRANGEMENT

DEPT. SCALE 1:100 1:100 DRAWING NO. 1-99-100-40888
SIGN SHEET 1 OF 1 REV. 01

REV	DATE	ALTERED : Saurabh Kumar
01	07.05.2018	CHD/APPD : N.Fazil/Gangadhar
ZONE B6 B10		Bottom of monorail for PA and FD Fan Rotor Handling is changed

CAUTION: THE INFORMATION ON THIS DOCUMENT IS THE PROPERTY OF BHARAT HEAVY ELECTRICALS LIMITED.IT MUST NOT BE USED DIRECTLY OR INDIRECTLY IN ANY WAY DETRIMENTAL TO THE INTEREST OF THE COMPANY.

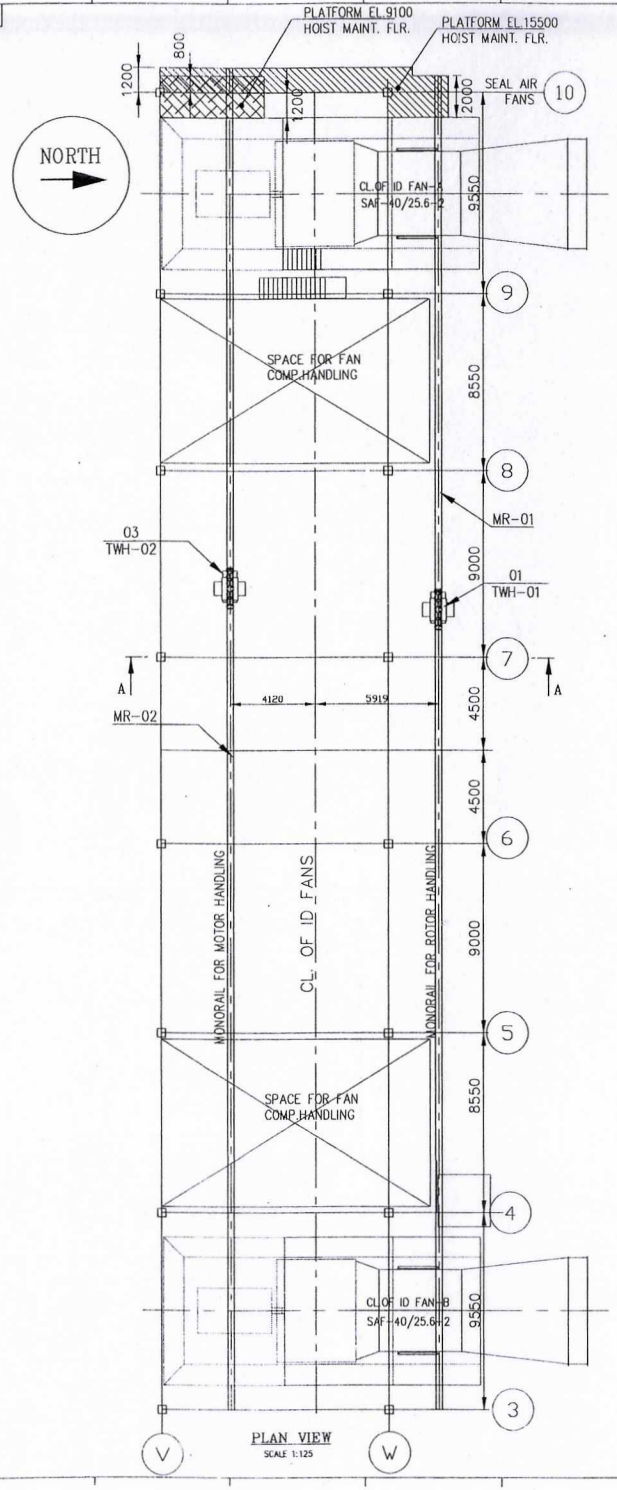

PLAN VIEW
SCALE 1:125

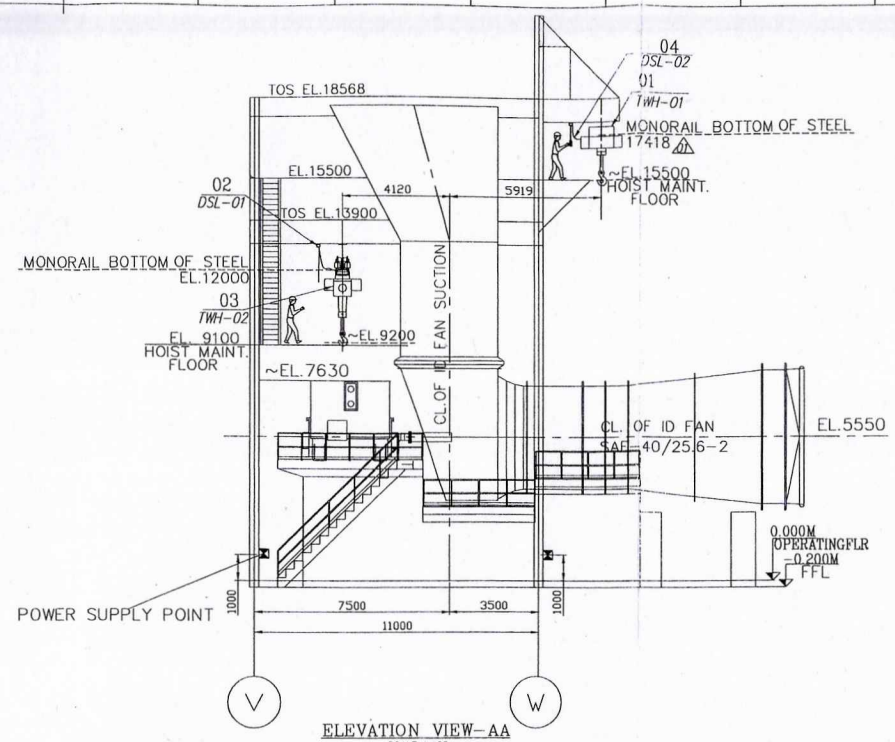

ELEVATION VIEW-AA
SCALE 1:125

NOTES:

MR-01 – MONORAIL FOR I.D. FAN– "A & B" ROTORS – QTY. ONE
MR-02 – MONORAIL FOR I.D. FAN– "A & B" MOTORS – QTY. ONE
TWH-01 – TROLLEY WITH HOIST FOR I.D. FAN ROTOR – QTY. ONE, CAPACITY – 22 METRIC TONS, LIFT – 15.5 M. 1
TWH-02 – TROLLEY WITH HOIST FOR I.D. FAN MOTOR – QTY. ONE, CAPACITY – 58 METRIC TONS, LIFT – 9.20 M.

GENERAL NOTES:

A. REFERENCE DRAWINGS:
1. LAYOUT OF ID.SYSTEM ELEVATION – 0-00-020-77323
2. LAYOUT OF ID.SYSTEM PLAN – 0-00-020-77324
3. GENERAL ARRANGEMENT OF ID FAN – 1-00-099-29051

B. TROLLEY WITH HOIST IS ELECTRICALLY OPERATED.
C. WEIGHT INDICATED IN THIS DRAWING FOR FAN ITEMS ARE APPROXIMATE FOR DESIGNING STRUCTURAL PARTS.
D. MR-01 AND MR-02 ARE TO BE RELEASED BY SUPPORTING STRUCTURES/BHEL-TRICHY.
E. FAN SHOWN IN THIS DRAWING IS SCHEMATIC ONLY. FOR DETAILS REFER FAN DRAWINGS.
F. ARRANGEMENT IS SIMILAR FOR ALL UNITS.
G. QUANTITY FURNISHED IN DRAWING IS FOR ONE BOILER ONLY.

NOTES TO PEM-BHEL/DELHI:

1. POWER SUPPLY POINTS AT ONE METER ABOVE GROUND LEVEL SHALL BE PROVIDED AT V10 & W10
   i) AT V10 : 415VAC, 3 PHASE, 50Hz.
   ii) AT W10 : 415VAC, 3 PHASE, 50Hz.

NOTES TO VENDORS:

1. POWER SUPPLY POINTS(2) AT ONE METER ABOVE GROUND LEVEL SHALL BE PROVIDED.
2. VENDORS ITEMS:
   A. FIXED POWER CABLE AND TRAILING CABLE.
   B. DSL TRAILING CABLE SYSTEM – CABLE TROLLEY & "TEE" TRACK TYPE – COMPLETE SET.
   C. SWITCH FUSE UNITS AND ALL ELECTRICAL ITEMS FOR TWH FROM POWER SUPPLY POINT.

EQUIPMENT WEIGHT IN (kg)

I.D. FANS MOTORS	48000
I.D. FANS ROTORS	17500

VARIANT NUMBER	ITEM NUMBER	DESCRIPTION	STD	DRAWING NUMBER	ITEM NO / VAR NO	MATERIAL CODE / MATERIAL SPECN	A/C.P. / DI	UNIT WEIGHT / QUANTITY	GS	ZONE
	04	DSL-CABLE TROLLEY TYPE LENGTH : 64.400 M.				SUB-DELY	ST	300.000		
							L	1		
1	03	TWH -02 ELEC.; CAP:58T LIFT : 9.20 M.				SUB-DELY	ST	8500.000		
							L	1		
	02	DSL-CABLE TROLLEY TYPE LENGTH : 64.800M.				SUB-DELY	ST	300.000		
							L	1		
1	01	TWH -01 ELEC.; CAP:22T LIFT : 15.5M.				SUB-DELY	ST	2600.000		
							L	1		

CUSTOMER No.:1823 TO 1827

CUSTOMER: TELANGANA STATE POWER GENERATION CORPORATION LTD

PROJECT : YADADRI THERMAL POWER STATION-5X800MW
NALGONDA DIST.,TELANGANA STATE, INDIA

BHARAT HEAVY ELECTRICALS LTD
HIGH PRESSURE BOILER PLANT
TIRUCHIRAPALLI-620014, INDIA

DEPT CODE HS-240	NAME	SIGN	DATE
DRWN	R.S.YADAV	Sd.	23.12.17
CHD	SAURABH KUMAR	Sd.	23.12.17
APPD	NOORUL FAZIL	Sd.	23.12.17

TITLE: ID FAN HANDLING ARRANGEMENT

DEPT. SCALE 1:125
SIGN

DRAWING NO. 1-99-100-40889
SHEET 1 OF 1 REV. 01

REV	DATE	ALTERED : SAURABH KR
01	07.05.18	CHD/APPD:N.FAZIL/GANGADHAR

ZONE 1 Monorail Bottom Elevation for ID Fan Handling is changed to 17.418 M. Unit weight of item no 01 is changed from 2000 kgs to 2600 Kgs. Hoist Capacity of ItemNo 01 is changed from 20 Ton to 22.0 Ton Unit weight of item no 03 is changed from 3000 kgs to 8500 Kgs.

CAUTION: THE INFORMATION ON THIS DOCUMENT IS THE PROPERTY OF BHEL. IT MUST NOT BE USED DIRECTLY OR INDIRECTLY IN ANY WAY DETRIMENTAL TO THE INTEREST OF THE COMPANY.

DRAWING NO: 1-99-400-40890

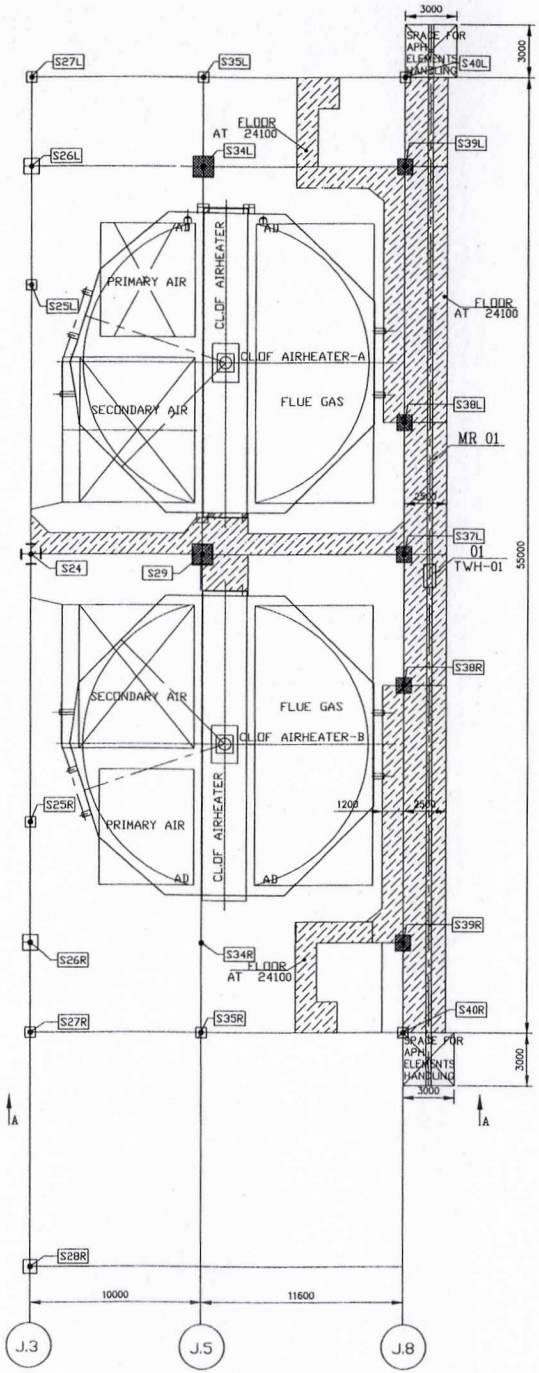

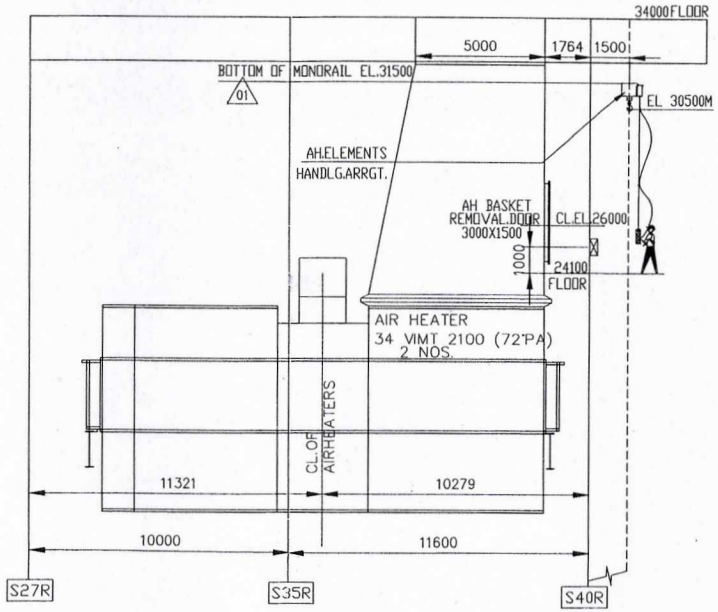

VIEW A-A

NTS

LEGEND

A. TWH-01 – TWH FOR APH HANDLING CAP.2T;LIFT: APPROX.31.0000M.
B. DSL-01 – DSL FOR APH HANDLING – CABLE TROLLEY TYPE–LEN. 61.00M.
C. MR-01 – MONORAIL LENGTH : 61.000M.– 1 No.

NOTES:–

A. REFERENCE DRAWINGS:
01. LAYOUT OF FLUE GAS DUCTING 0-00-020-77333
02. COLD PRIMARY AIR DUCTING 0-00-020-77328
03. GA OF BOILER (SECTIONAL SIDE ELEVATION) 0-00-022-77364
04. FLOOR PLAN AT EL.24100 AND EL.25700 0-00-022-77344

B. MONORAIL & MONORAIL SUPPORTS ARE TO BE RELEASED BY SUPPORTING STRUCTURES
C. AIR HEATER ELEMENTS HANDLING SPACE ARE TO BE CLEARED UP TO GROUND LEVEL
D. DIMENSIONS ARE TAKEN FROM ABOVE DRAWINGS
E. SIZE AND T O S ELEVATION FOR MONORAIL IS TO BE FURNISHED BY SUPPORTING STRUCTURES
F. LENGTH OF MONORAIL
LENGTH OF MONORAIL (MR–01) : 61.000M; Qty : 1 No.
G. QUANTITY INDICATED IN THE B O M IS FOR ONE BOILER ONLY.
H. MAXIMUM WEIGHT OF ELEMENT : 840 KG
I. HANDLING ARRANGEMENT FOR REMOVING THE APH ELEMENTS FROM THE AIR PREHEATER SHALL BE PROVIDED BY BAP/RANIPET. BHEL/TRICHY SCOPE IS TO HANDLE THE ELEMENTS FROM 24.100M FLOOR TO GROUND LEVEL ONLY.

NOTES TO PEM / DELHI

1. POWER SUPPLY POINT TO BE PROVIDED AT ONE METER ABOVE 24.100M FLOOR
2. SUPPLY POINT AT COLUMN–S40 R/L
3. POWER SUPPLY REQUIRED RATING : 415V AC; 3 PHASE; 50Hz.

NOTES TO VENDORS

SUPPLIER'S SCOPE STARTS AT PEM–BHEL'S POWER SUPPLY POINT.

VENDOR ITEMS

A. FIXED POWER CABLE AND TRAILNG CABLE
B. DSL TRAILNG CABLE SYSTEM– CABLE TROLLEY WITH "Tee" TRACK–COMPLETE SET.
C. SWITCH FUSE UNITS AND ALL ELETRICAL ITEMS FOR TWH FROM POWER SUPPLY POINT
D. TROLLEY WITH HOIST – CAPACITY 2 TONS; LIFT 31.000MTRS.

VARIANT NUMBER	ITEM NUMBER	DESCRIPTION	STD	DRAWING NUMBER	ITEM NO / VAR NO	MATERIAL CODE / MATERIAL SPECN	A/C.P. / DI	UNIT / UNIT WEIGHT / QUANTITY	GS	ZONE
	02	DSL–CABLE TROLLEY TYPE. LENGTH : 61.000M.				SUB–DELY	ST / L	500.000 / 1		
01	01	TWH – ELEC.; CAP:2T LIFT : 31.000M.				SUB–DELY	ST / L	950.000 / 1		

CUSTOMER No.:1823 TO 1827

CUSTOMER: TELANGANA STATE POWER GENERATION CORPORATION LTD

PROJECT : YADADRI THERMAL POWER STATION-5X800MW
NALGONDA DIST.,TELANGANA STATE, INDIA

BHARAT HEAVY ELECTRICALS LTD
HIGH PRESSURE BOILER PLANT
TIRUCHIRAPALLI-620014, INDIA

DEPT CODE	NAME	SIGN	DATE
DRVN	RAM SHANKAR	Sd..	28.03.18
CHD	SAURABH KUMAR	Sd..	29.03.18
APPD	NOORUL FAZIL	Sd..	30.03.18

TITLE: APH ELEMENTS HANDLING ARRANGEMENT

DEPT. / SIGN / SCALE: 1:150 1:100

DRAWING NO. 1-99-400-40890

SHEET 1 OF 1 REV. 01

CAUTION: THE INFORMATION ON THIS DOCUMENT IS THE PROPERTY OF BHARAT HEAVY ELECTRICALS LIMITED. IT MUST NOT BE USED DIRECTLY OR INDIRECTLY IN ANY WAY DETRIMENTAL TO THE INTEREST OF THE COMPANY.

REV	DATE	ALTERED : R S YADAV
01		CHD & APPD : SAURABH KR

ZONE 01: BOTTOM OF MONORAIL IS INDICATED AS 31500.
LIFT IS CHANGED FROM 31.500 M TO AS 31000.

DRAWING NO: 1-99-400-40891

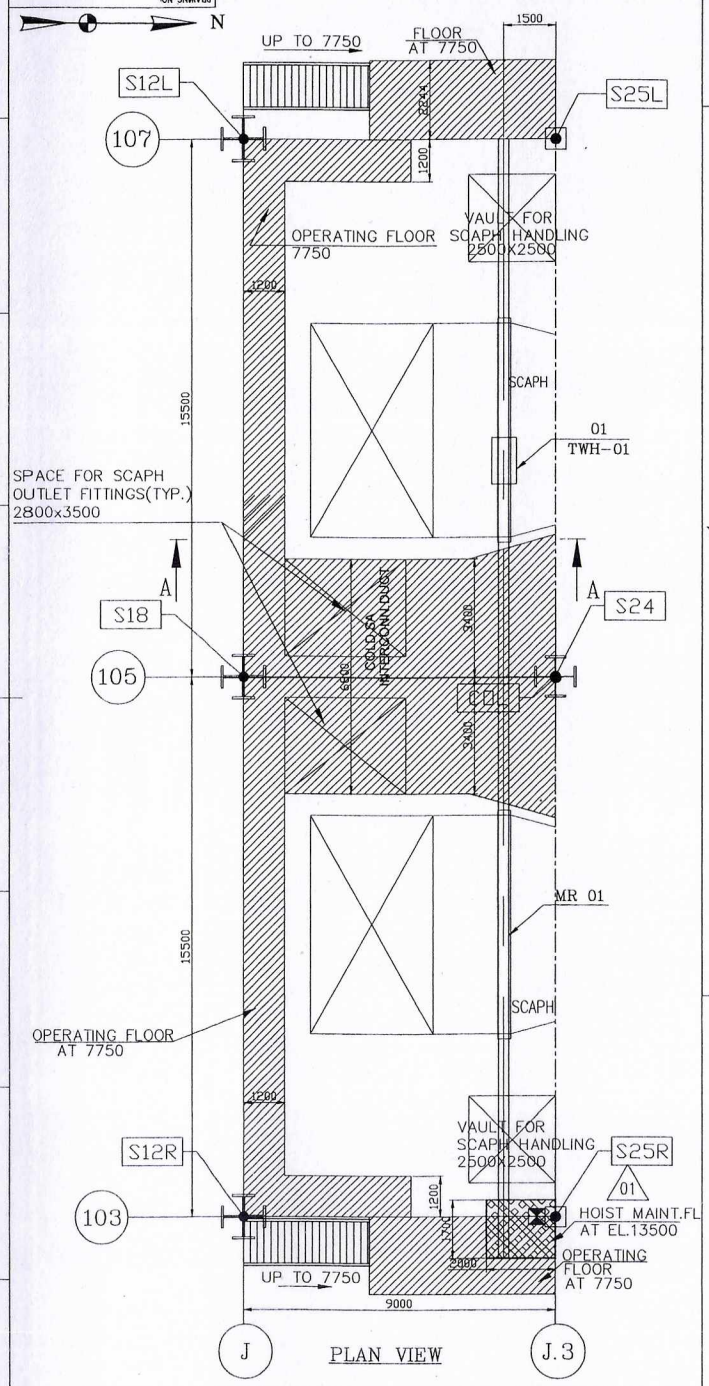

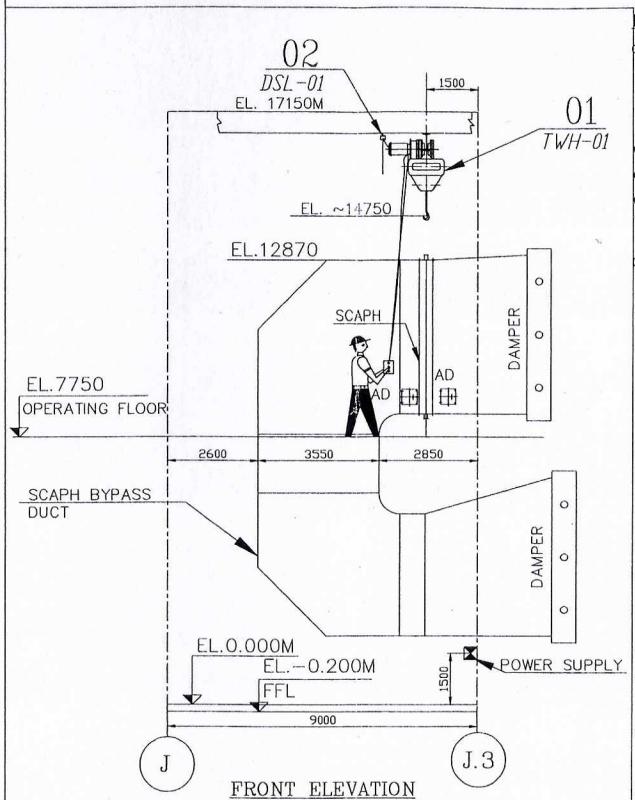

FRONT ELEVATION
VIEW-AA

NOTE - GENERAL:

01. REFERENCE DRAWINGS:

A. GA OF BOILER SEC. SIDE ELEVATION--- 0-00-022-77364.

B. LAYOUT OF COLD SECONDARY AIR DUCTING --- 0-00-020-77328.

C. FLOOR PLAN ARRGT. AT EL.4110,5700,7750--- 0-00-021-77340.

02. SCAPH SHALL BE HANDLED IN BLOCKS.

03. HANDLING SPACE IS TO BE CLEARED UPTO 0.00M LEVEL FROM 14.750M WITHOUT ANY INTERFERENCE / ENCROACHMENTS.

04. REFER LAYOUT DRAWING FOR ARRANGEMENT OF HOIST MAINTENANCE / ACCESS PLATFORM.

05 ALL ELEVATIONS ARE WITH RESPECT TO FINISHED FLOOR LEVEL OF TG BUILDING AS EL. (+)0.00M WHICH CORRESPONDS RL.+81.5

06. QUANTITY INDICATED IN THE BOM IS FOR ONE BOILER ONLY.

LEGEND

A. TWH-01 -TWH FOR SCAPH HANDLING CAP.2.5T;LIFT: APPROX.14.750M-1 NOs.

B. DSL-01 -DSL FOR SCAPH HANDLING - CABLE TROLLEY TYPE-LEN. 32.250M,1 NOs. 01

C. MR-01 - MONORAIL LENGTH :32.250M.- 1 Nos. 01

MAXIMUM WEIGHT TO BE HANDLED: ~ 2000Kg

NOTES TO PEM / DELHI

A. POWER SUPPLY POINTS ARE TO BE PROVIDED AT 1.500M ABOVE GROUND FLOOR AT COLUMN S25R

B. POWER SUPPLY REQD. RATING ; 415V AC; 3 PHASE, 50Hz.

NOTES TO VENDORS:

A. SUPPLIER'S SCOPE STARTS AT POWER SUPPLY POINT.

VENDOR ITEMS:

A. FIXED POWER CABLE & TRAILING CABLE SYSTEM.

B. DSL TRAILING CABLE SYSTEM.
CABLE TROLLEY & "Tee" TRACK TYPE -COMPLETE.

C. SWITCH FUSE UNITS & ALL ELECTRICAL ITEMS FOR TWH FROM CUSTOMER'S POWER SUPPLY POINT.

D. TROLLEY WITH HOIST - CAP.2.5 TONS; LIFT -14.750M

01

VARIANT NUMBER	ITEM NUMBER	DESCRIPTION	STD	DRAWING NUMBER	ITEM NO	MATERIAL CODE	VALUE	UNIT	UNIT WEIGHT	GS	ZONE
	02	DSL 01-CABLE TROLLEY TYPE, LENGTH :32.250M.				SUB-DELY		ST	300.000		
								L	1		
	01	TWH 01 - ELEC.; CAP:2.5T LIFT : 14.750 M.				SUB-DELY		ST	750.000		
								L	1		
					VAR NO	MATERIAL SPECN		DI	QUANTITY		

CUSTOMER No.:1823 TO 1827

CUSTOMER: TELANGANA STATE POWER GENERATION CORPORATION LTD

PROJECT : YADADRI THERMAL POWER STATION-5X800MW
NALGONDA DIST.,TELANGANA STATE, INDIA

BHARAT HEAVY ELECTRICALS LTD
HIGH PRESSURE BOILER PLANT
TIRUCHIRAPALLI-620014, INDIA

DEPT CODE		NAME	SIGN	DATE
	DRWN	RAVI SHANKAR	Sd.	20.03.18
HS	CHD	SAURABH KUMAR	Sd.	23.03.18
240	APPD	NOORUL FAZIL	Sd.	24.03.18

TITLE SCAPH HANDLING ARRANGEMENT

DEPT. SCALE 1:75 DRAWING NO. 1-99-400-40891

SIGN

SHEET 1 OF 1 REV. 01

REV	DATE	ALTERED : R S YADAV
01	16.05.2016	CHD & APPD :SAURABH KUMAR
ZONE 01		DRAWING REVISED TO INDICATE HOIST MAINTENANCE FLOOR AS PER LAYOUT DRAWING :0-00-021-77341 DSL CABLE LENGTH ITEM NO 02 IS CHANGED FROM 31.0 M TO 32.250 M

CAUTION: THE INFORMATION ON THIS DOCUMENT IS THE PROPERTY OF BHARAT HEAVY ELECTRICALS LIMITED.IT MUST NOT BE USED DIRECTLY OR INDIRECTLY IN ANY WAY DETRIMENTAL TO THE INTEREST OF THE COMPANY.

DRAWING NO: 2-99-600-40717

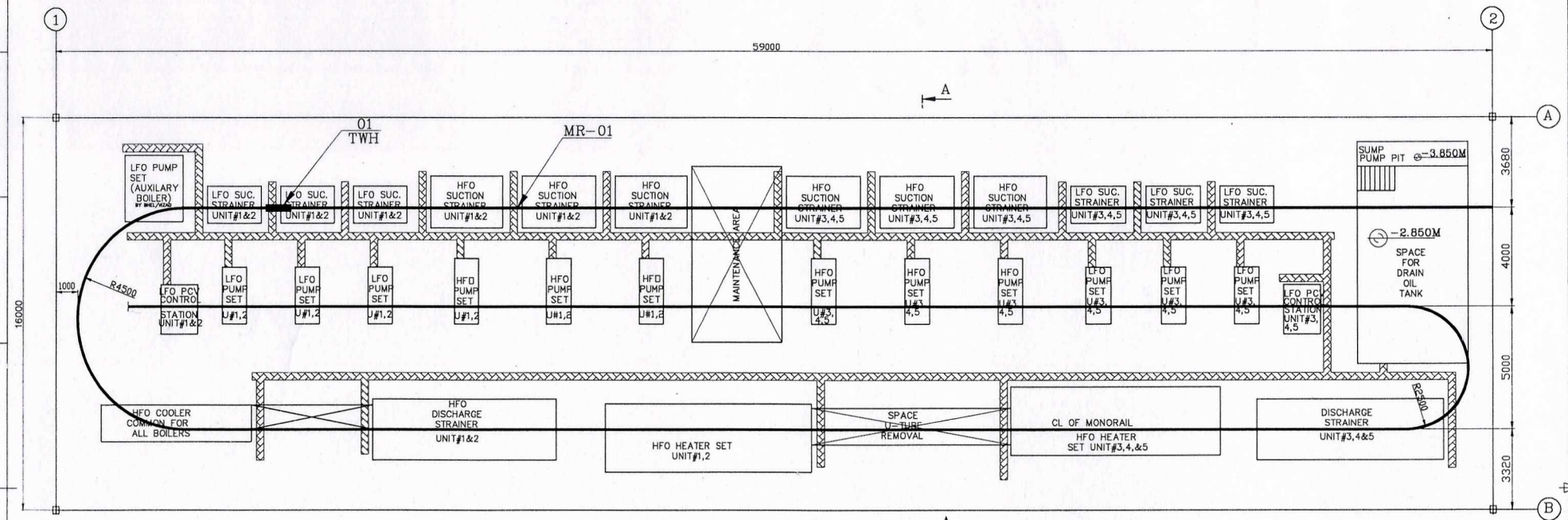

PLAN VIEW

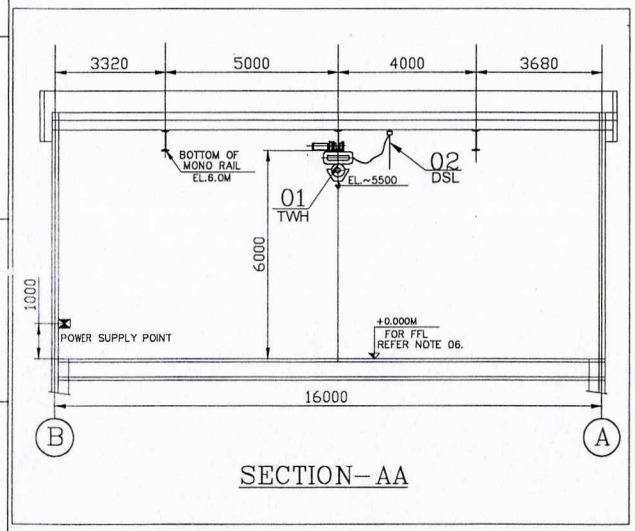

SECTION-AA

NOTES: –

1. FOR FUEL OIL PUMP HOUSE LAYOUT, REFER DRG No.: 0-00-056-11165
2. TROLLEY WITH HOIST IS ELECTRICALLY OPERATED.
3. WEIGHT INDICATED IN THIS DRAWING FOR ITEMS 01 & 02 IN BOM ARE APPROXIMATE ONLY FOR DESIGNING STRUCTURAL PARTS.
4. MR-01 IS TO BE RELEASED BY PEM/DELHI.
5. MAXIMUM WEIGHT TO BE HANDLED : 1500 KG.
6. ALL ELEVATIONS ARE WITH RESPECT TO EL. (+)0.00m, FINISHED GROUND FLOOR LEVEL OF TG BUILDING AND MILL BAY, WHICH CORRESPONDS TO RL 81.5 m

LEGEND: –

A. MR - MONORAIL FOR FUEL OIL PUMP HANDLING.

B. TWH - TROLLEY WITH HOIST

NOTES TO PEM: –

1. POWER SUPPLY POINT ONE METER ABOVE THE FFL 0.00M.
2. POWER SUPPLY REQUIRED RATING: 5KW 415V AC 3-PHASE 50Hz.

NOTES TO VENDOR: –

1. SUPPLIER SCOPE STARTS AT POWER SUPPLY POINT.
2. VENDOR ITEMS:

A. FIXED POWER CABLE AND TRAILING CABLE.

B. DSL TRAILING CABLE SYSTEM - CABLE TROLLEY & "Tee" TRACK TYPE-COMPLETE .

C. SWITCH FUSE UNITS AND ALL ELECTRICAL ITEMS FOR TWH FROM POWER . SUPPLY POINT

D. TROLLEY WITH HOIST - CAPACITY 2.0T; LIFT 5.500M.

VARIANT NUMBER	ITEM NUMBER	DESCRIPTION	STD	DRAWING NUMBER	ITEM NO / VAR NO	MATERIAL CODE / MATERIAL SPECN	A/C/P	UNIT / DI	UNIT WEIGHT / QUANTITY	GS	ZONE
	02	DSL-CABLE TROLLEY TYPE LENGTH:185.0M				SUB-DELY		ST	2000.000		
								L	1		
	01	TWH - ELEC. CAP.2.0T;LIFT:5.500M				SUB-DELY		ST	1000.000		
								L	1		

CUSTOMER No.: 1823 TO 1827

REV	DATE	ALTERED : Saurabh Kumar
02	27.09.2018	CHD/APPD : N.Fazil
ZONE	Revised to change item no 02 DSL length as 185.0 Metre.	

REV	DATE	ALTERED : Saurabh Kumar
01	21.06.2018	CHD/APPD : N.Fazil/Gangadhar
ZONE	Revised as per customer comments.	

CAUTION: THE INFORMATION ON THIS DOCUMENT IS THE PROPERTY OF BHARAT HEAVY ELECTRICALS LIMITED.IT MUST NOT BE USED DIRECTLY OR INDIRECTLY IN ANY WAY DETRIMENTAL TO THE INTEREST OF THE COMPANY.

CUSTOMER: TELANGANA STATE POWER GENERATION CORPORATION LTD
TELANGANA , INDIA
5 X 800 MW YADADRI TPS, NALGONDA

PROJECT : TATA CONSULTING ENGINEERS LIMITED
BANGLORE INDIA

BHARAT HEAVY ELECTRICALS LTD
HIGH PRESSURE BOILER PLANT
TIRUCHIRAPALLI-620014, INDIA

DEPT CODE		NAME	SIGN	DATE
HS 240	DRWN	R S YADAV	Sd.	10.05.18
	CHD	SAURABH KUMAR	Sd.	10.05.18
	APPD	NOORUL FAZIL	Sd.	10.05.18

TITLE: FO PUMP HANDLING ARRANGEMENT

DEPT. / SIGN — SCALE 1:115 1:150

DRAWING NO. 2-99-600-40717

SHEET 1 OF 1 REV. 02

Prepared By **Quality Assurance**	VENKANNA RUPANI	R. Venkanna 16/07/2018

Reviewed by	Signature
Quality Assurance (G. PANNEERSELVAM)	16/07/18
Engineering (G. SARAVANA KUMAR)	16.07.2018
Materials Management / BOI (M. RADHA KRISHNAN)	16.07.2018
Quality Control (R. DHARMAR)	16/07/18

Rev No	Date	Approved by	Signature
00	16/07/2018	AGM / QA & BE	16/7/18

Record of Revisions

Rev No	Details of Revision	Remarks
00	Fresh Issue	

बीएचईएल BHEL	MANUFACTURER'S NAME & ADDRESS: BHEL: TIRUCHIRAPPALLI APPROVED SUPPLIERS	**STANDARD QUALITY PLAN** **PRODUCT: ELECTRICAL HANDLING SYSTEMS** **SUB-SYSTEM : Steam Generator and Auxiliaries**	**QWI NO:SQP:SD:18** **REV NO: 00 DATE: 16/07/2018** **PAGE: 2 OF 5**

SL. NO	COMPONENT & OPERATIONS	CHARACTERISTICS	CLASS	TYPE OF CHECK	QUANTUM OF CHECK		REFERENCE DOCUMENT	ACCEPTANCE NORMS	FORMAT OF RECORD		AGENCY			REMARKS
											M	C	N	
1	2	3	4	5	M	C/N	7	8	9	D*	** 10			11
1.0	**RAW MATERIALS**													
1.1	MS Plates(or Seamless pipe) for Rope Drum, Pulley, Trolley Plates, MS Beams & Channels	Chemical & Mechanical Properties	B	TC Review	Sample	Sample	Materials as per BHEL Approved Drawing/Datasheet		MTC /ALC	√	P	V	V	
		Internal Soundness	B	NDE- UT*	100%	100%	SA 435	SA 435	IR/ ALC	√	P	V	V	*For thickness >40mm
1.2	Castings for Bearing Plates, Rope Guide (if applicable) & Sheaves	Chemical & Mechanical Properties (as applicable)	B	TC Review	Sample	Sample	Materials as per BHEL Approved Drawing/Datasheet		MTC /ALC	√	P	V	V	
1.3	Forgings for Wheel	Chemical & Hardness (after heat treatment)	B	TC Review	Sample	Sample	Materials as per BHEL Approved Drawing/Datasheet		MTC /ALC	√	P	V	V	
		Internal Soundness	B	NDE- UT$a	100%	100%	ASTM A388	ASME Sec VIII Div 2 Cl 3.3.4	MTC / IR	√	P	V	V	$For dia or thickness>40mm
1.4	Forgings for Shafts, Axles, Gears & Pinions for Hoists, CT, LT, etc.	Chemical & Mechanical Properties (as applicable)	B	TC Review	Sample	Sample	Materials as per BHEL Approved GA Drawing/Datasheet		MTC /ALC	√	P	V	V	
	Shafts & Axles	Internal Soundness	B	NDE- UT*	100%	100%	ASTM A388	ASME Sec VIII Div 2 Cl 3.3.4	IR	√	P	V	V	*For dia or thickness>40mm
1.5	Hook	Type, Chemical & Mechanical Properties	B	TC Review	100%	100%	Materials as per BHEL Approved GA Drawing/Datasheet		MTC /ALC	√	P	V	V	
		Soundness	B	UT or RT & MPI @	100%	100%	ASTM A388 or E94 & ASTM E709	ASME VIII Div 2 Cl 3.3.4 or ASTM E446 & @	MTC /ALC / IR	√	P	V	V	@No cracks/ linear indications
	BOUGHTOUT ITEMS: Wire, Brake & hooks shall be as per BHEL Trichy approved sources													
1.6	Fixed & Trailing Cables	IR Capacity & Other tests as per standard	B	TC Review	100%	100%	IS:694 -2010 / IS: 9968 – Part 1 – 1988		MTC	√	P	V	-	BIS Marked
1.7	Wire Rope (Galvanized as per IS 1835 Type B)	Size, Construction, grade & Surface Condition, Proof Load & Breaking Load test	B	Measurement & Visual	IS:2266-2002 / IS 2365-1977		IS:2266-2002 / IS 2365-1977	IS:2266-2002 / IS 2365-1977 & BHEL Engg Spec	MTC	√	P	V	V	
1.8	Motors: Makes as per Note 1; Also see Note 2.	Make, Type, Rating, Performance*, etc	B	TC Review*	100%	100%	IS:325-1996 & BHEL Appd drwg	IS:325-1996 & BHEL Appd drwg	MTC	√	P	V	V	*including routine test report

LEGEND: * RECORDS IDENTIFIED WITH "TICK" (√) SHALL BE ESSENTIALLY INCLUDED BY THE SUPPLIER IN QA DOCUMENTATION;
**** M:** MANUFACTURER, **C:** BHEL QC/BHEL AIA, **N**: CUSTOMER; **P:** PERFORM. **W**: WITNESS, **V:** VERIFICATION; **CLASS** : A - CRITICAL ; B - MAJOR ; C – MINOR;
MTC- Manufacturer's Test Certificate; IR- Inspection/Test Report; COC: Certificate of Compliance; (R): Routine test; (T)/(Ts): Type test.; ALC: Approved Laboratory Certificate

SL. NO	COMPONENT & OPERATIONS	CHARACTERISTICS	CLASS	TYPE OF CHECK	QUANTUM OF CHECK		REFERENCE DOCUMENT	ACCEPTANCE NORMS	FORMAT OF RECORD		AGENCY			REMARKS
											M	C	N	
1	2	3	4	5	M	C/N	7	8	9	D*	** 10			11
1.9	Fasteners(Galvanized)	Surface, sizes, etc	B	Visual	100%	100%	IS: 1367 Gr. 8.8	IS: 1367 Gr. 8.8	MTC /IR	√	P	V	V	
1.10	Brakes: EM/EHT	Make, Type, Rating	B	Visual			BHEL Specification / Approved Drawing/Datasheet; IS:3938-1983		MTC /IR	√	P	V	V	
		Capacity of Brakes	B	Review										
1.11	Limit Switches, SFU Overload Relay, Push buttons, Contractor, Control Transformer, Terminal Block, Selector Switch, Indicating Lamp	Make, Type, Rating	B	Visual	100%	100%	BHEL Specification / Approved Drawing/Datasheet		MTC /IR	√	P	V	V	
2.0	**INPROCESS CONTROLS**													
2.1	Welding Qualifications	Procedure	B	Documents Review	100%	100%	AWS D1.1/ ASME Sec IX	AWS D1.1/ ASME Sec IX	PQR & WPS	√	P	V	V	
		Personnel	B	Documents Review	100%	100%	AWS D1.1/IBR/ ASME Sec IX	AWS D1.1/IBR/ ASME Sec IX	WPQ	√	P	V	V	
2.2	Rope Drum Assembly	Dimensions	B	Measurement	100%	100%	As per Mfg Drg	As per Mfg Drg	IR	√	P	V	-	
		Butt Weld Soundness	B	RT	100%	100%	ASTM E94	ASME Sec VIII Div 1 UW 52	IR	√	P	V	V	
		Fillet Weld Soundness	B	NDE- MPI/LPI	100%	100%	ASME E709/ E165 or Equivalent	No Crack or Linear Indication	IR	√	P	V	V	
2.3	PWHT, if applicable	Temperature & Time control	A	Review of HT Charts	100%	100%	WPS	WPS	HT Chart	√	P	V	V	
2.4	Gears &Pinions (after final machining/ grinding)	Surface Soundness	B	NDE- MPI/ LPI	Sample	Sample	ASTM E709/ E165 or Equivalent	No cracks/linear indications	IR	√	P	V	V	
2.5	Gear Box	No load run test (Noise level , temp. rise, Oil leakage)#	B	Test	100%	100%	Manufacturer's practice	BHEL Approved Drawing/ Datasheet	IR	√	P	V	V	#including backlash, tooth contact, reduction ratio
		Gear Box Housing- Leak tightness	B	Kerosene Fill Test	100%	100%	Manufacturer's practice	No Leakage	IR	√	P	V	V	
2.6	Wheel, Gears & Pinions	Surface soundness; # Hardness	B	MPI; Measurement	100%	100%	BHEL Approved GA Drawing/Datasheet		IR	√	P	V	V	#Check surface hardness after hardening.

LEGEND: * RECORDS IDENTIFIED WITH "TICK" (√) SHALL BE ESSENTIALLY INCLUDED BY THE SUPPLIER IN QA DOCUMENTATION;
**** M:** MANUFACTURER, **C:** BHEL QC/BHEL AIA, **N**: CUSTOMER; **P:** PERFORM. **W**: WITNESS, **V:** VERIFICATION; **CLASS** : A - CRITICAL ; B - MAJOR ; C – MINOR;
MTC- Manufacturer's Test Certificate; IR- Inspection/Test Report; COC: Certificate of Compliance; (R): Routine test; (T)/(Ts): Type test.; ALC: Approved Laboratory Certificate

SL. NO	COMPONENT & OPERATIONS	CHARACTERISTICS	CLASS	TYPE OF CHECK	QUANTUM OF CHECK		REFERENCE DOCUMENT	ACCEPTANCE NORMS	FORMAT OF RECORD		AGENCY			REMARKS
											M	C	N	
1	2	3	4	5	M	C/N	7	8	9	D*	** 10			11
2.7	Hooks	Proof Load	A	Load Test	100%	100%	IS:15560-2005		IR	√	P	V	V	
		Soundness after proof load Test	B	MPI/LPI	100%	100%	ASME E709/ E165 or Equivalent	No Crack or Linear Indication	IR	√	P	V	V	
3.0	**FINAL ASSEMBLY & TESTING - Refer Note 3.**													
3.1	Control Panel (During Final Inspection along with Hoist)	Electrical-Insulation resistance, etc.	B	IR+HV & Functional Tests	100%	100%	IS 8623-1993 Part 1		IR	√	P	W	V	
		Enclosure	B	Degree of Protection*	One/ design	One/ design	BHEL Specification		IR	√	P	V	V	*IP 55 certificate (from NABL accredited labs) to be provided
		Paint: Shade, DFT, adhesion	B	Visual & Measurement	100%	10%	BHEL Specification/ No peel off for adhesion /Approved drawing		IR	√	P	W	V	
		Dimensions & Surface condition	B	Visual & Measurement	100%	10%	BHEL Specification/ Approved drawing		IR	√	P	W	V	
3.2	Performance of Completed Assembly of Trolley with Hoist with control panel and pendent station.	Trolley with Hoist: Load Test, Over load Test, Speed Control, Dimensions, Lift & Travel	A	Performance Test	100%	100%	Upto 16 Tons: IS:3938-1983 and above 16 Tons: IS:3177-1999 & BHEL approved GA Drawing /Datasheet		IR	√	P	W	V	
		Crane (without hoisting arrangement): Level align, Span, Braking, Deflection		Performance Test	One/ Type / Capacity	One/ Type / Capacity	IS:3177-1999, IS:807-2006 & BHEL Specification		IR	√	P	W	V	" I " Beam Girder
3.3	Down Shop Lead System (DSL)/Trailing Cable System (Taut Wire and Cable Trolley Type)	Smooth running with cable load	B	Performance Test	One/ PO*	One/ PO*	BHEL Specification/BHEL approved Drawing /Datasheet		IR	√	P	W	V	*on single beam
3.4	Painting and Packing and Stability	Paint: Shade, DFT, adhesion	B	Visual & Measurement	100%	100%	BHEL Specification/BHEL approved Drawing /Datasheet		IR	√	P	V	V	

LEGEND: * RECORDS IDENTIFIED WITH "TICK" (√) SHALL BE ESSENTIALLY INCLUDED BY THE SUPPLIER IN QA DOCUMENTATION;
**** M:** MANUFACTURER, **C:** BHEL QC/BHEL AIA, **N:** CUSTOMER; **P:** PERFORM. **W:** WITNESS, **V:** VERIFICATION; **CLASS** : A - CRITICAL ; B - MAJOR ; C – MINOR;
MTC- Manufacturer's Test Certificate; IR- Inspection/Test Report; COC: Certificate of Compliance; (R): Routine test; (T)/(Ts): Type test.; ALC: Approved Laboratory Certificate

SL. NO	COMPONENT & OPERATIONS	CHARACTERISTICS	CLASS	TYPE OF CHECK	QUANTUM OF CHECK		REFERENCE DOCUMENT	ACCEPTANCE NORMS	FORMAT OF RECORD		AGENCY			REMARKS
											M	C	N	
1	2	3	4	5	M	C/N	7	8	9	D*	** 10			11

Notes:

1. **Motors shall be as per BHEL approved make.**

2. a) **For motors less than 30 KW:**
   Acceptance of motor less than 30 KW is based on COC of the manufacturer and the contractor confirming as follows:
   "It is hereby confirmed that the above mentioned motor(s) was/were manufactured taking care of BHEL specific requirements regarding ambient temperature, voltage and frequency variation hot start, pull out torque, starting KVA/KW, temperature rise, distance between center of the stud and gland plate (terminal plate) and tested in accordance with approved drawing / data sheet & IS:325-1996"

   b) **For motors of 30 KW and above:**
   Acceptance of motor rating between 30 KW and 50 KW is based on BHEL review of routine test report. Report as per IS 325 by supplier along with COC confirming as follows:
   "It is hereby confirmed that the above mentioned motor(s) was/were manufactured taking care of BHEL specific requirements regarding ambient temperature, voltage and frequency variation, hot start, pull out torque, starting KVA / KW, temperature rise, distance between center of the stud and gland plate (terminal plate), space heater and tested in accordance with approved drawing / data sheet & IS:325-1996"

3. **For Customer inspection, if applicable, the stages indicated under Column N shall be followed with specific approval of BHEL/Customer for Witness/Verification by Customer.**

4. The latest editions/versions of the mentioned/referred standards shall be used.

PAINTING SCHEDULE

BHARAT HEAVY ELECTRICALS LIMITED
Tiruchirappalli - 620 014

TELANGANA STATE POWER GENERATION CORPORATION LIMITED (TSGENCO) YADRADRI DIST., TELANGANA
YADRADRI TPS 5 X 800 MW CUSTOMER NO: U8/1823 to 1827, UNIT – I to V
PAINTING SCHEDULE

Prepared by	**K. Srinivasan** **Senior Engineer/ Plant Lab**		**Document No: PL: C3 - PS / 1823**
Reviewed by	**D. Vijayakumar** **SM /PE/FB**		**Revision No: 00 Dated: 01.01.2018**
Approved by	**Dr. Anbazhagan. V** **SDGM / Plant Lab**		**Sheet No. 01 of 12.**

m:\ chem. \ contracts 15\TSGENCO- 5X800 MW YADRADRI TPS\psword_00.doc

Executive Director
Thermal Projects Construction
TSGENCO, Vidyut Soudha,
Khairatabad, Hyderabad-500 082.

Sl. No.	PGMA / Description	Surface Preparation & Surface Profile	Primer coat		Intermediate Coat		Finish coat			Total DFT µm (min)
			Paint	No. of coats	Paint	No. of coats	Paint	No. of coats	Shade	
8 PS73	Components < 95° C –Other than components in Sl.No.3. 07-409,431,460,461,462, 07-502,503, 531, 560; 12-906, 916,907; 17-919; 21-601,604; 24-350, 351, 352, 353,801,804, 24-813, 817, 818 24-825, 826, 836, 841, 842, 950; 30-233,234; 35-995; 36-396, 613; 39- 302; 41- 350,390, 500; 42-001,002,005,010,046,065,070,120,128, 42-152,154,157; 43-004,104,200; 45-200,801,802,804,805,858; 47-261,263,858; 48 – 022, 345, 355, 365; 65-736; 67-204,272,276,277, 283, 67-801,802,803; 95-088,089,091,485; 96-186; 97-097, 585,591,592; Duct plates, expansion joints 48-911,912; Handling equipments: 99-100,300, 400, 502,600; Impulse lines: 24-800 Seal air ducting: 43-005, 105; Cold Air:48-012,014, 112,114, 141 Tempering Air: 48-142,144;	SSPC-SP3/ Power Tool Cleaning	Red Oxide Zinc phosphate Primer (Alkyd Base) to IS 12744 DFT= 30µm per coat	2	--	--	Synthetic Enamel paint (Long Oil Alkyd) to IS 2932 DFT= 30µm per coat	2	Smoke Grey Shade No: 692 of IS5	120

Executive Director
Thermal Projects Construction
TSGENCO, Vidyut Soudha,
Khairatabad, Hyderabad-500 082.