ALL DIMENSIONS ARE IN MILLIMETRES

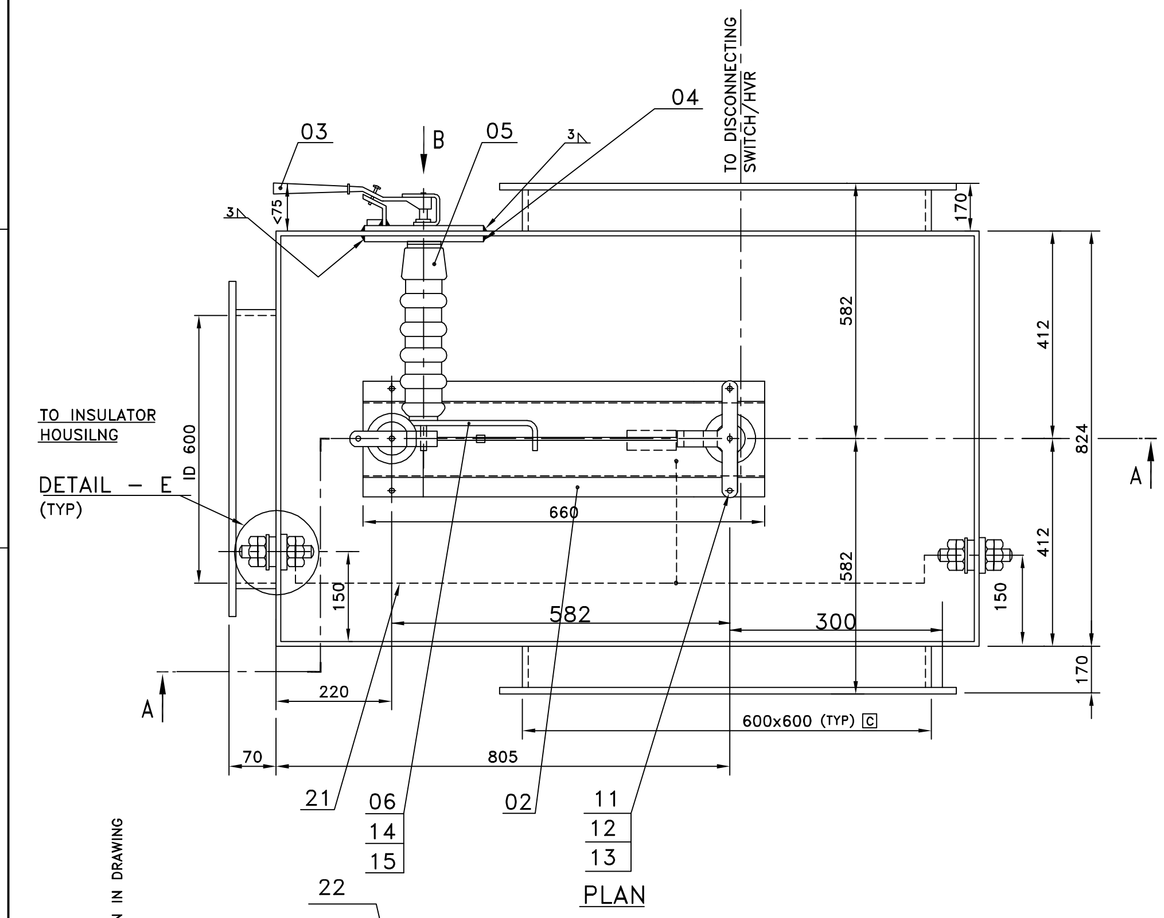

PLAN

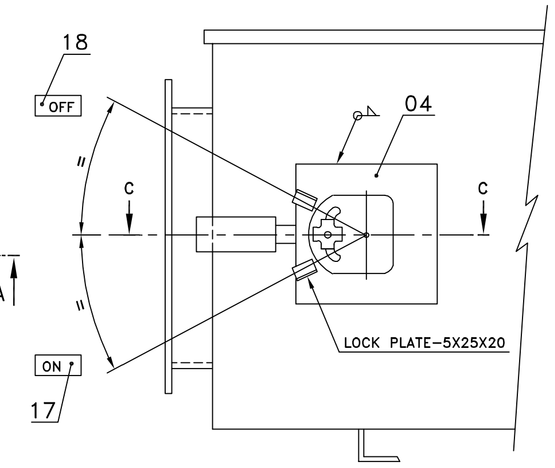

V I E W – B

SEALING&HANDLE ARRANGEMENT IS TENTATIVE.ANY OTHER SEALING ARRANGMENT WHICH IS BETTER THAN THIS IS ALSO ACCEPTABLE, SUBJECT TO THE APROVAL BY BHEL

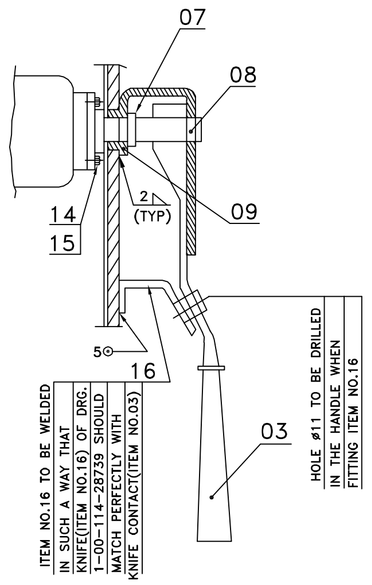

S E C – C C

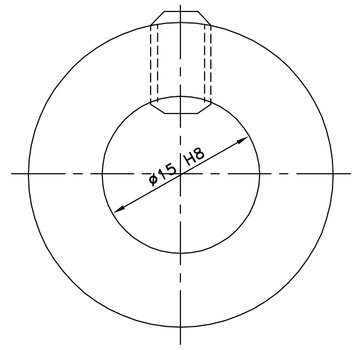

*DET.POS. 07

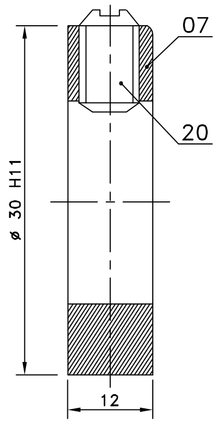

N O T E

01.PACKING DETAILS SHALL BE FURNISHED FOR BAP REVIEW/ APPROVAL.
02.SWITCH ENCLOSURE SHALL BE SUITABLE FOR IP 55 DEGREE OF PROTECTION.
03.COLOUR SHALL BE RAL 5012, BLUE FINISH.DOUBLE COATING OF OUTER FINISH SHOULD BE GIVEN AFTER RED OXIDE PRIMER TREATMENT.
04.THE IMPULSE VOLTAGE LEVEL SHALL BE 250KV PEAK (BOTH +VE & –VE).
05.ALL SUB–VENDOR DRAWINGS ARE SUBJECT TO BHEL APPROVAL.
06.SUPPLIER NAME PLATE SHALL GIVE ALL DETAILS OF : a) NAME OF THE SUPPLIER , b) SL. NO, c) VAR. NO, d)YEAR OF MANUFACTURE AND e) ADDRESS.
07.NAME PLATE SHALL BE OF ANODISED ALUMINIUM AND IT SHOULD BE FIXED SUITABLY.

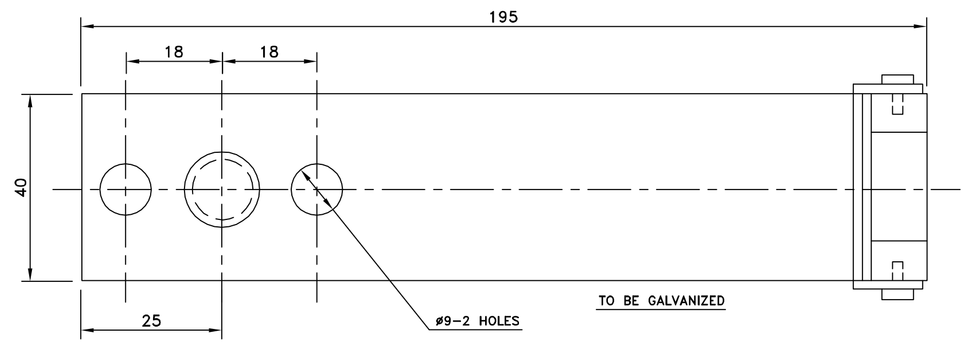

DET.POS.06 PLAN

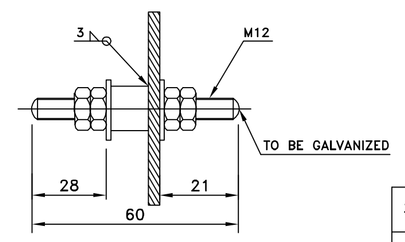

DETAIL–E

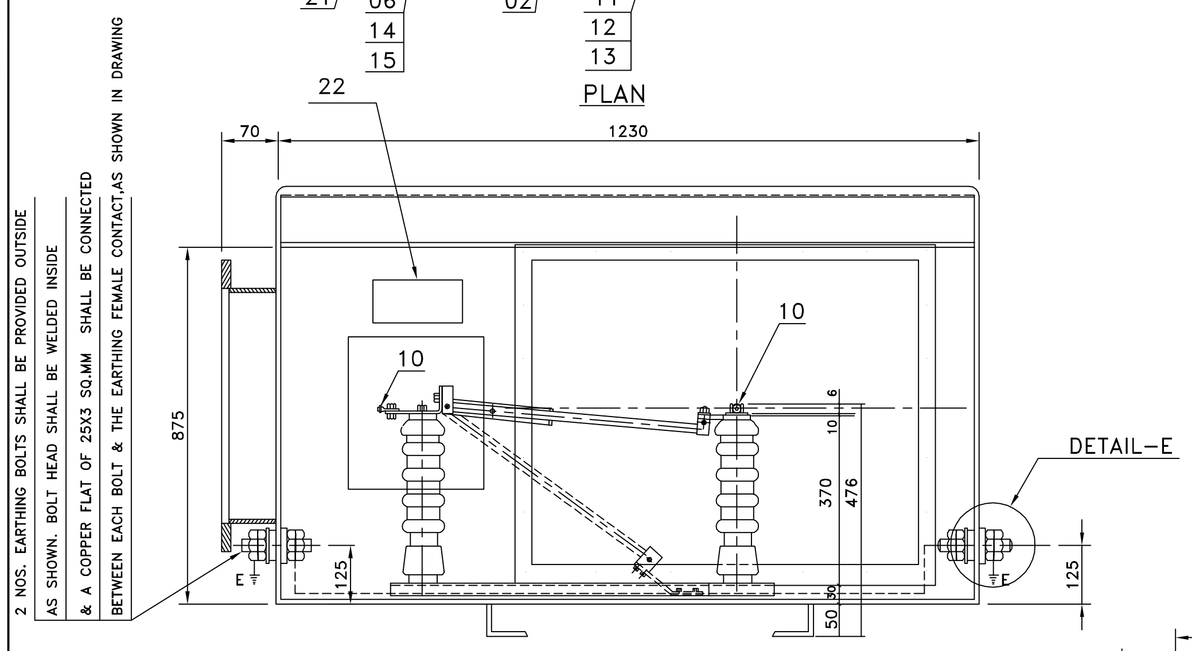

S E C – A A

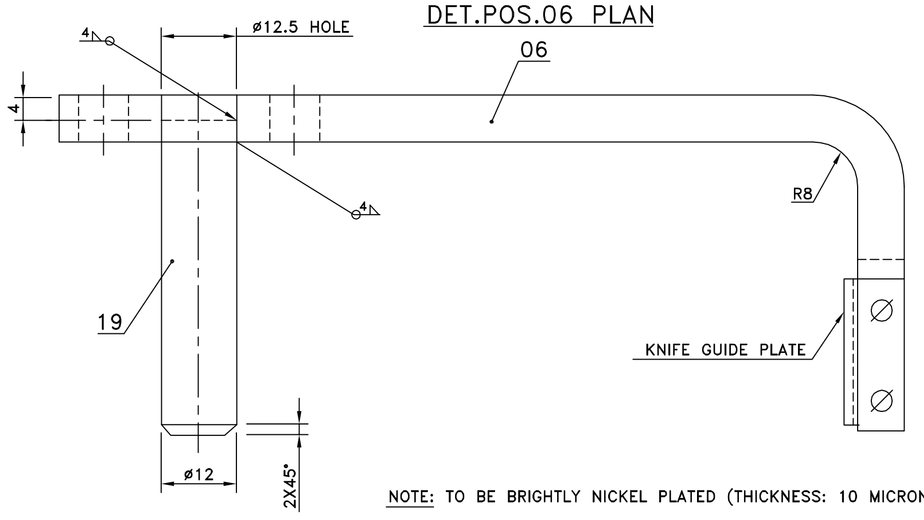

NOTE: TO BE BRIGHTLY NICKEL PLATED (THICKNESS: 10 MICRONS).

DET.POS. 06 ELEVATION

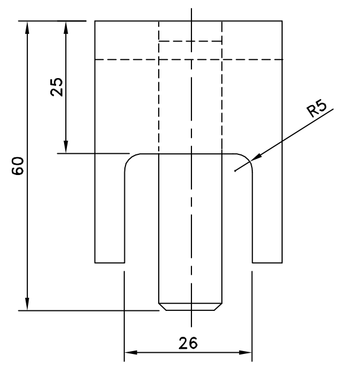

DET.POS. 06 SIDE VIEW

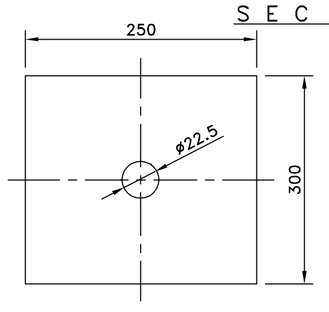

DET.POS. 04

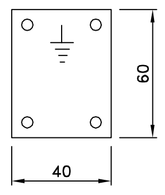

EARTH PLATE

NOTE: ENGRAVE THE SYMBOL

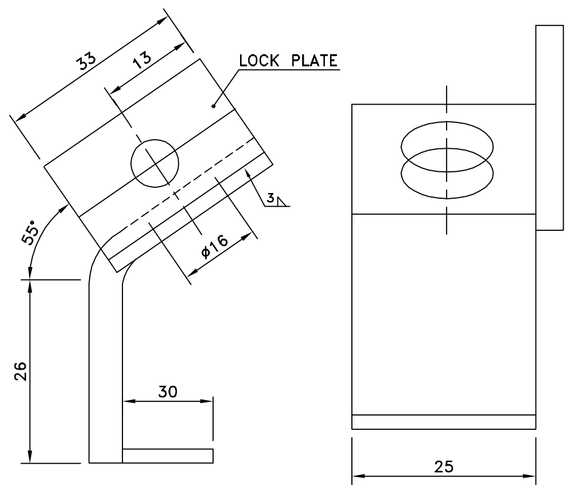

DET.POS. 16

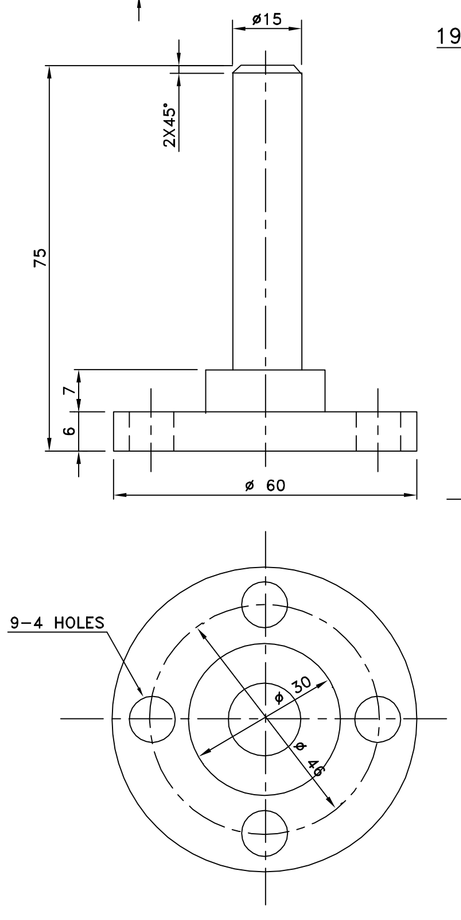

DET.POS. 08

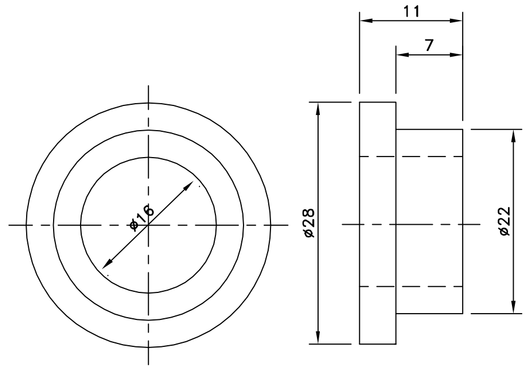

DET.POS. 09

Special Requirements:

01. This drawing shall be read alongwith drg no 10011428738 &1001128739
02. Type test certificate conducted at CPRI, Bangalore for 250 KV Impulse test shall be submitted. Incase already this test is done at CPRI Bangalore,the reports shall be submitted for review and approval. The test certificate shall be from CPRI Bangalore only.
03. Incase the test were done at any other lab other than CPRI,Bangalore a fresh test shall be conducted at CPRI,Bangalore.
04. all dimensions indicated in the drawing are tentative only.if any dimensional changes are required for meeting the 250 KV impulse withstand test requirement, vendor shall provide the same without any additional commercial implications to BHEL.

REV	DATE	CHD	K.S.S	
00		APPD	S.R	

FOR PRODUCTION
REF.–PR:QA:590 FOR PAINTING
REF.–PR:QA:500 FOR UNTOL. DIMNS.

ITEM NO.	DESCRIPTION	DRAWING NO.	MATL SPEC.	UNIT	QTY
22.	MANUFACTURER NAME PLATE				1
21.	COPPER STRIP 25x3				2
20.	GRUB SCREW M6X6		IS 2388–P–6.6		1
19.	ROUND ø 12–56		IS 2062		1
18.	ENGRAVED METAL NAME PLATE – 'OFF'				1
17.	ENGRAVED METAL NAME PLATE – 'ON'				1
16.	LOCK PL. 5X25X55		IS 2062		2
15.	WASHER M8		IS 2016		6
14.	SCREW M8X16		IS 1363–B–4.6		6
13.	WASHER M12		IS 2016		7
12.	NUT M12		IS 1363–B–4.6		4
11.	SCREW M12X22		IS 1363–B–4.6		4
10.	CONNECTING SCREW	1–79–006–00068	STYLE 02		3
09.	BUSHING ROUND ø28–11		IS 306 GR.G2 COMM. BRASS		1
08.	PIVOT ROUND ø60–75		IS 1875 CL VI		1
07.	SET RING 15 PL.12–35ø		IS 2062		4
06.	LEVER PL.8X40X231		IS 2062		1
05.	PIN INSULATOR	3–79–006–00100	96–150–132		3
04.	PL. 10X250X300		IS 2062		1
03.	HAND LEVER	2–79–006–00149			1
02.	DISCONNECTING SWITCH				1
01.	SWITCH BOX STYLE–05	1–00–114–28738			1

NTPC
STANDARD

BHARAT HEAVY ELECTRICALS LIMITED, UNIT: BOILER AUXILIARIES PLANT, RANIPET:632 406.

DEPT CODE		NAME	SIGN	DATE
M	DESN	VIJAYALAKSHMI	Sd	18.09.12
	CHD	REMYA	Sd	18.09.12
	APPD	S.R		18.09.12

TITLE: DISCONNECTNG SWITCH ASSEBLY (95 KV SYSTEM)

SCALE : NTS

BHEL/BAP DRG NO. 1–00–114–28737

REV 00

Size A1

SHEET NO 2 OF 03

ALL DIMENSIONS ARE IN MILLIMETRES

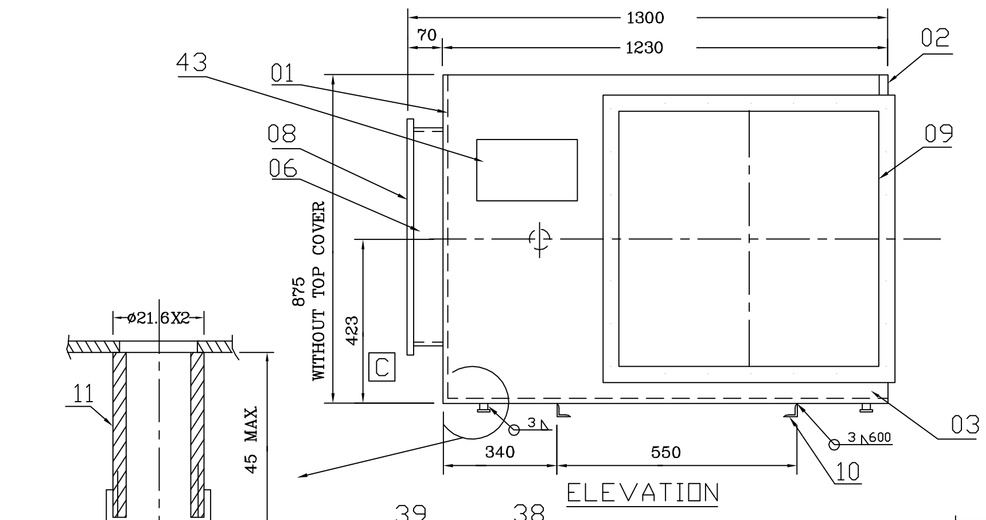

ELEVATION

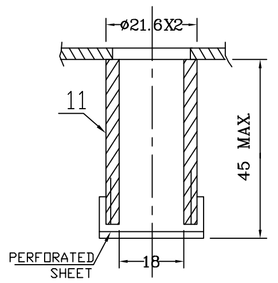

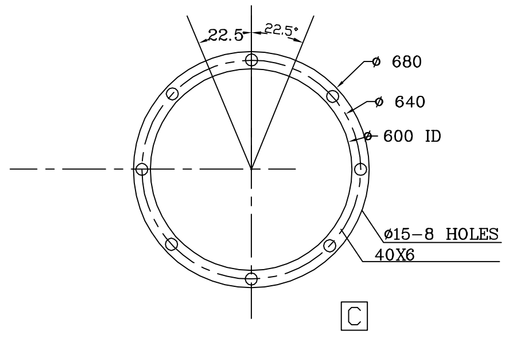

DET.POS.08

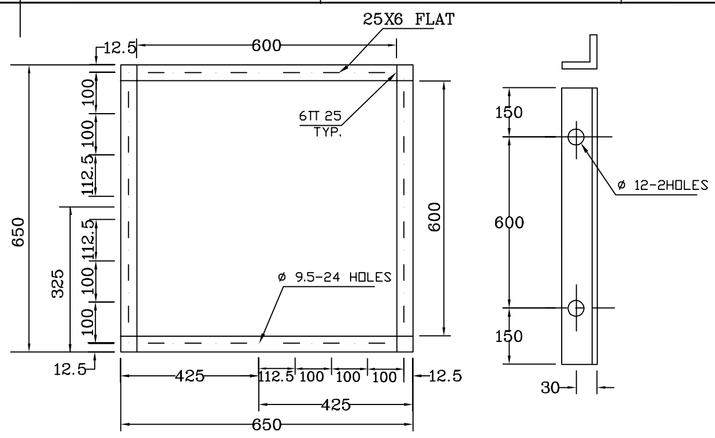

DET.POS.09 C

DET.POS.10

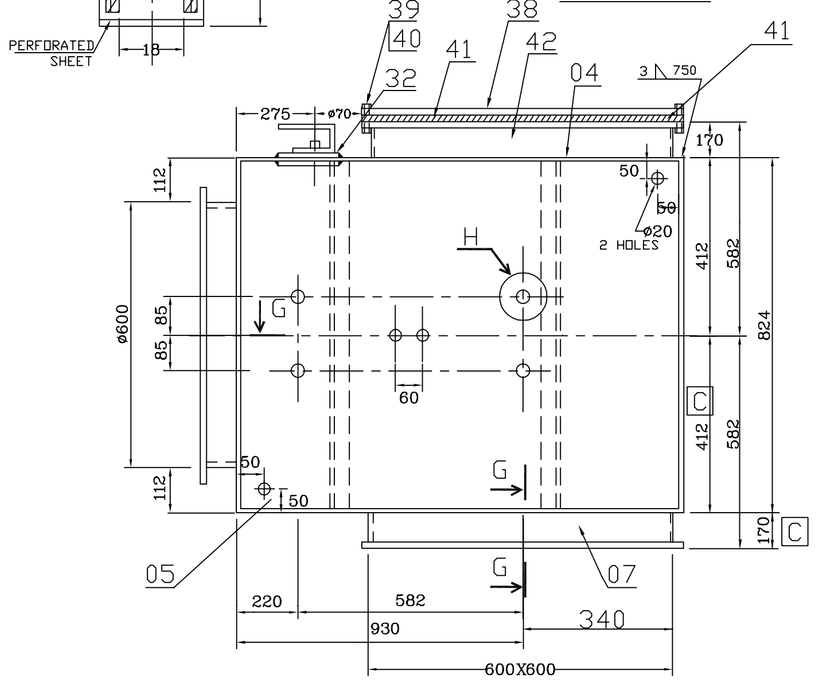

PLAN WITHOUT COVER

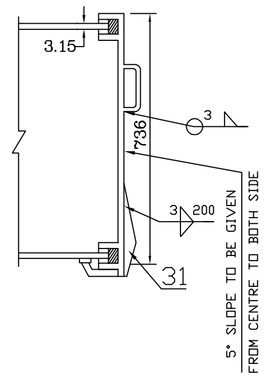

SECTION-AA

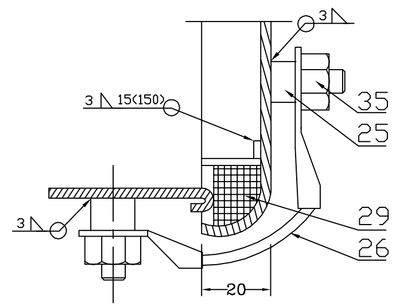

SECTION-EE

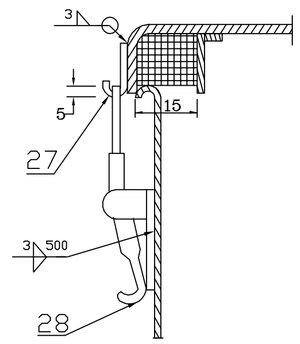

SECTION-KK

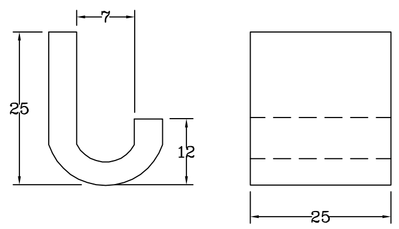

DET.POS. 27

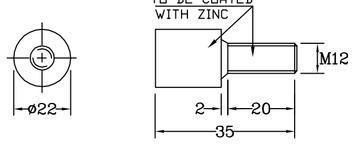

DET.POS. 25

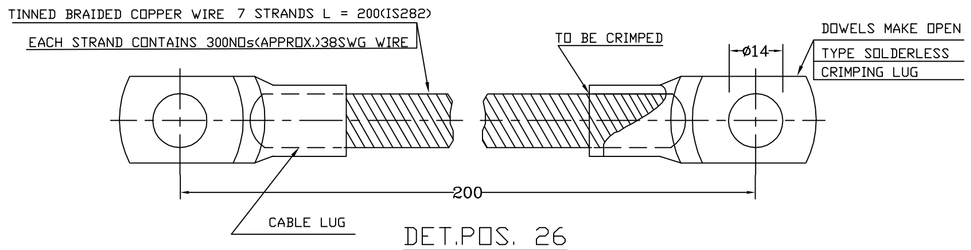

DET.POS. 26

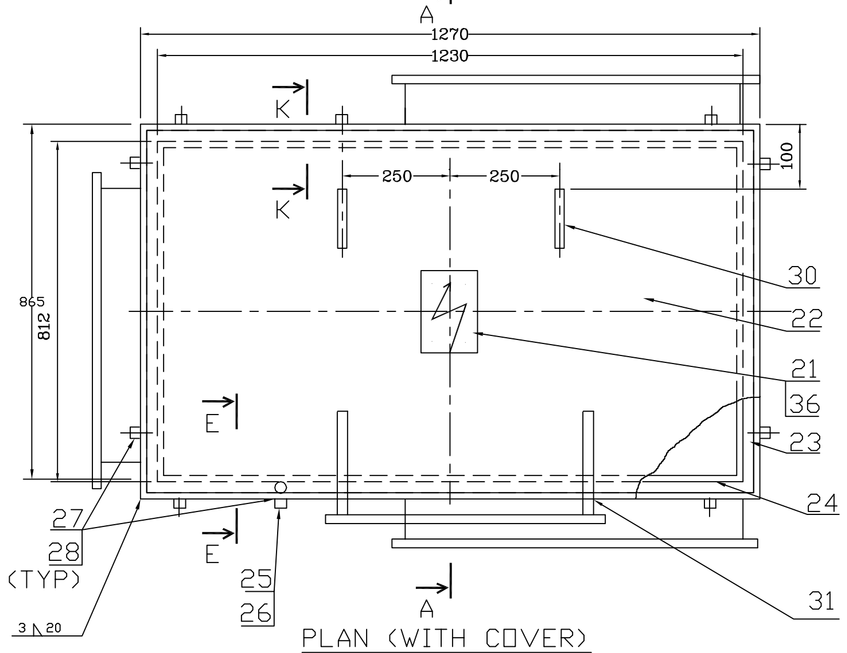

PLAN (WITH COVER)

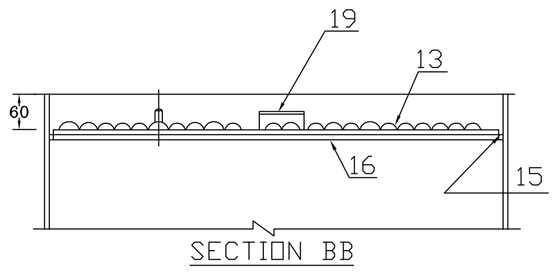

SECTION BB

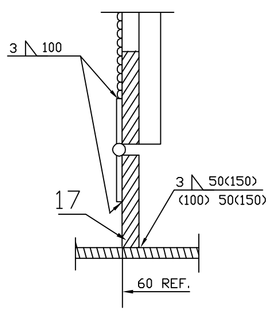

SECTION CC

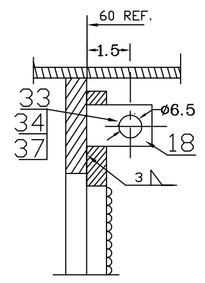

SECTION DD

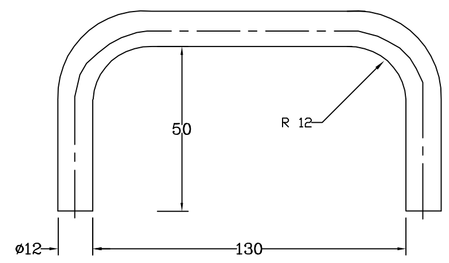

DET.POS. 30

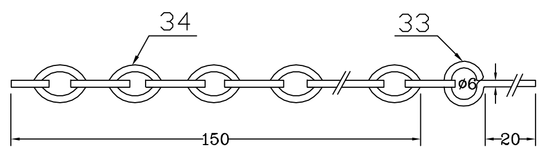

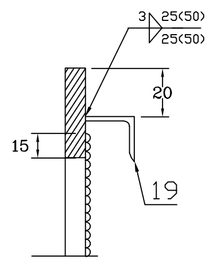

SECTION FF

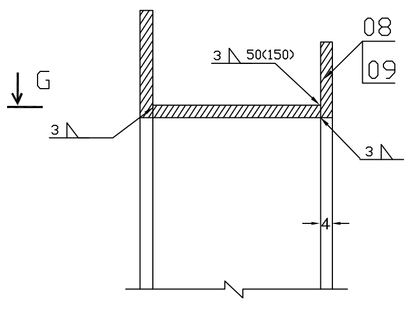

SECTION GG

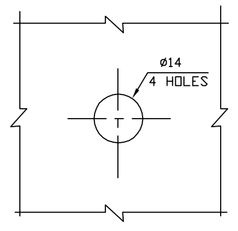

DETAIL H

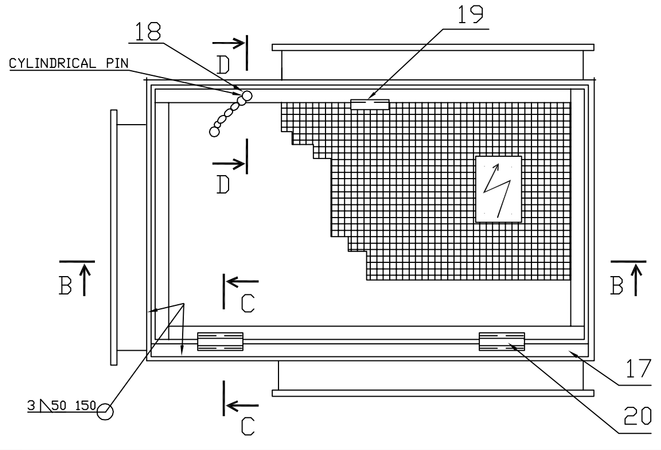

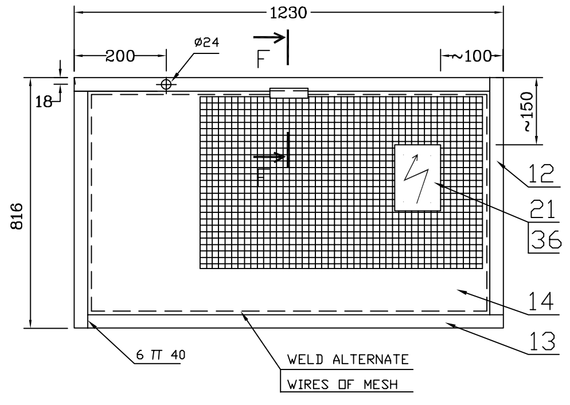

NOTE:

THE DIMENSIONS MARKED C ARE CRITICAL DIMENSIONS AND MUST BE MAINTAINED. ALL OTHER DIMENSIONS ARE TENTATIVE AND IT CAN BE CHANGED TO MAINTAIN THE CRITICAL DIMENSIONS.

TWO NUMBERS OF WARNING SIGN AS PER BHEL DRAWING NO.4-79-006-00267 SHALL BE PROVIDED LOCATION OF WARNING SIGN SHALL BE ONE NUMBER ON THE TOP COVER AND OTHER ON THE MESH DOOR

ITEM NO.	DESCRIPTION	DRAWING NO.	MATL SPEC.	UNIT	QTY
43.	MANUFACTURER'S NAMEPLATE				1
42.	SH 3.5X166X650		IS 1079 63-ST 34		4
41.	GASKET 15MM THICK.		NEOPRENE		2
40.	NUT M8		IS 1363-B-4		2 4
39.	BOLT M8X40		IS 1875 CL VI		2 4
38.	BLANKING PLATE 3.15X650X650				1
37.	PVC SLEEVE FOR CHAIN		NATURAL COLOUR		1
36.	SNAP HEAD RIVET 5X10		IS 2155 M.S		8
35.	NUT M12		IS 1363-B-4		2
34.	LINK CHAIN WIRE ø 2 L=150				1
33.	PIN ø6-40				1
32.	PL. 250X300X10		IS 2062		2
31.	HINGE	2-79-006-00075			1
30.	HANDLE ROUND ø12-240		IS 1875 CL.VI		2
29.	GASKET 15X15		NEOPRENE		1
28.	ECCENTRIC LOCK	2-79-006-00148			8
27.	HOOK PL.5X25X39		IS 2062		4
26.	EARTHING CABLE L200		IS 282		1
25.	BOLT ROD ø22X35		IS 1875 CL VI		2
24.	SH 3.15X35X1230		IS 1079-ST.34		2
23.	SH 3.15X35X812		IS 1079-ST.34		2
22.	DOOR SH 3.15X865X1270		IS 513		1
21.	WARNING SIGN	4-79-006-00267			2
20.	HINGE L100				2
19.	L 50 50X6 L=100		IS 2062		1
18.	ROUND ø 16 L=25		IS 2062		1
17.	PLATE 6X40X1230		IS 2062		1
16.	PLATE 6X40X1230		IS 2062		1
15.	PLATE 6X40X824		IS 2062		2
14.	WIRE MESH 824X1230 THREAD ø2.5X20X20				1
13.	PL.6X40X1230		IS 2062		2
12.	PL.6X40X824		IS 2062		2
11.	TUBE ø21.6X2-45		IS 1239		2
10.	L50X50X6, 600 LONG		IS 2062		2
09.	FLANGE PL.6X25X630		IS 2062		8
08.	FLANGE PL.6Xø580		IS 2062		1
07.	SH-3.15X170X594		IS 1079-ST.34		4
06.	SH-3.15X66X1561		IS 1079 st 34		1
05.	SH-3.15X718X1096		IS 513		1
04.	SH-3.15X747X1096		IS 513		1
03.	SH-3.15X747X1096		IS 513		1
02.	SH-3.15X812X824		IS 513		1
01.	SH-3.15X812X824		IS 513		1

REV	DATE	CHD		
00		APPD		

NTPC STANDARD

BHARAT HEAVY ELECTRICALS LIMITED, UNIT: BOILER AUXILIARIES PLANT, RANIPET:632 406.

DEPT CODE		NAME	SIGN	DATE
M	DESN	VIJAYALAKSHMI	Sd	18.09.12
	CHD	REMYA	Sd	18.09.12
	APPD	S.R		18.09.12

TITLE: DISCONNECTNG SWITCH ASSEBLY (95 KV SYSTEM) (switch box)

SCALE : NTS

BHEL/BAP DRG NO. 1-00-114-28738

REV 00

Size A1

sheet 01 of 03

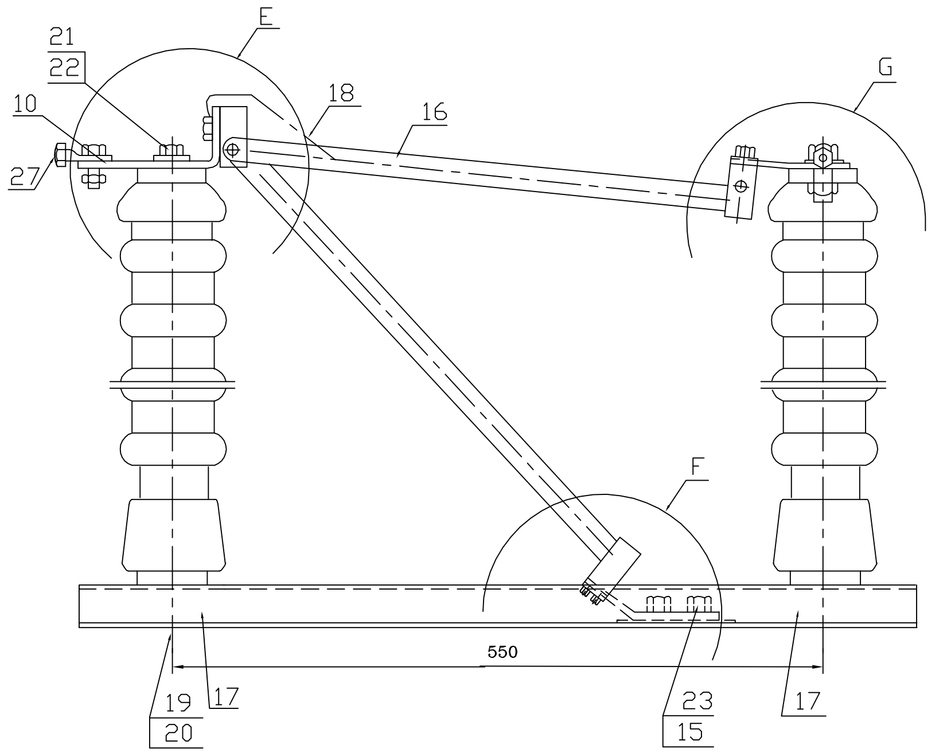

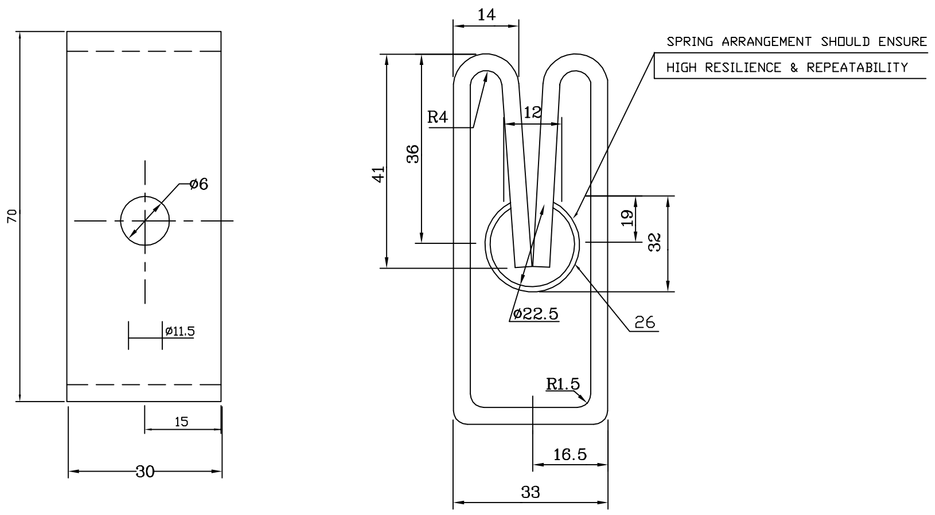

DET.POS. 03

NOTE: TO BE BRIGHTLY NICKEL PLATED.

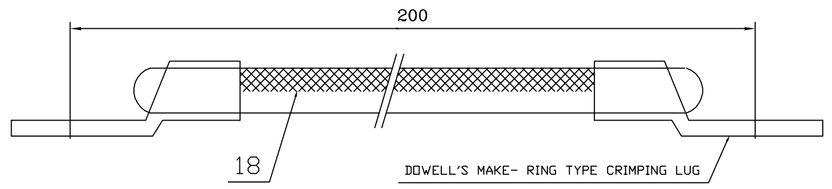

STRANDED BRAIDED TINNED COPPER WIRE 7 STRANDS L-180(MIN)
IS 2821 EACH STRAND CONTAINS 300 NOs.(APPROX.) 38SWG WIRE.

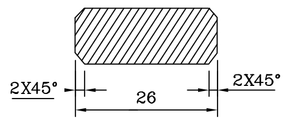

SECTION - AA

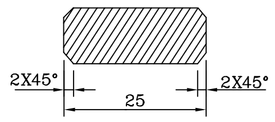

SECTION - CC

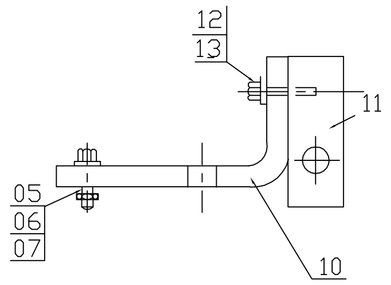

DETAIL - E

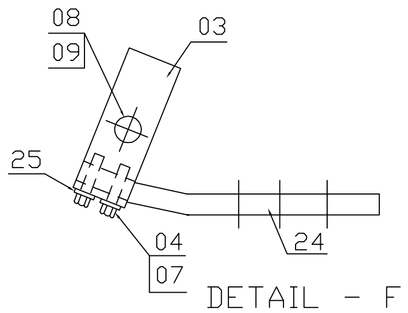

DETAIL - F

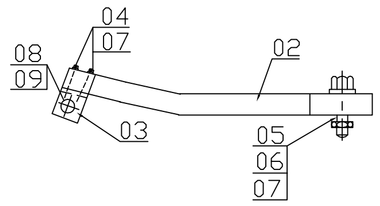

DETAIL - G

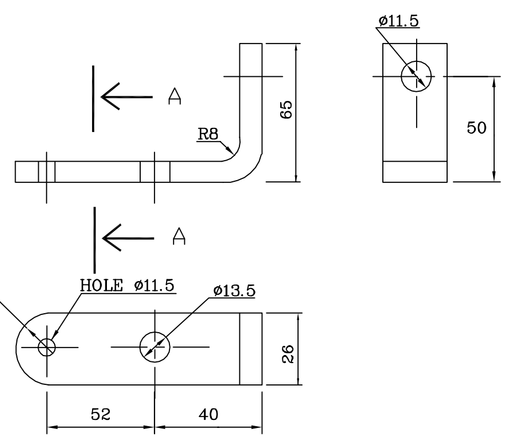

DET.POS. 10

NOTE : TO BE BRIGHTLY NICKEL PLATED.

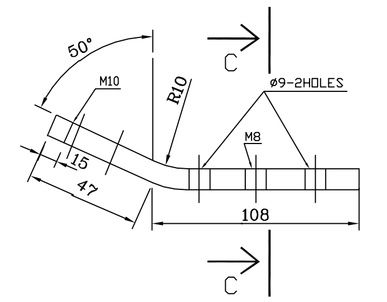

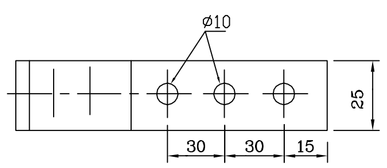

DET.POS. 24

NOTE: TO BE BRIGHTLY NICKEL PLATED.

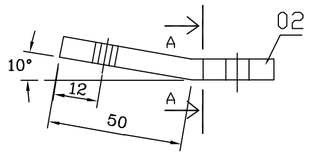

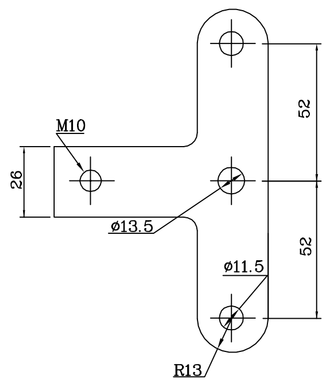

NOTE : TO BE BRIGHTLY NICKEL PLATED.

DET.POS. 02

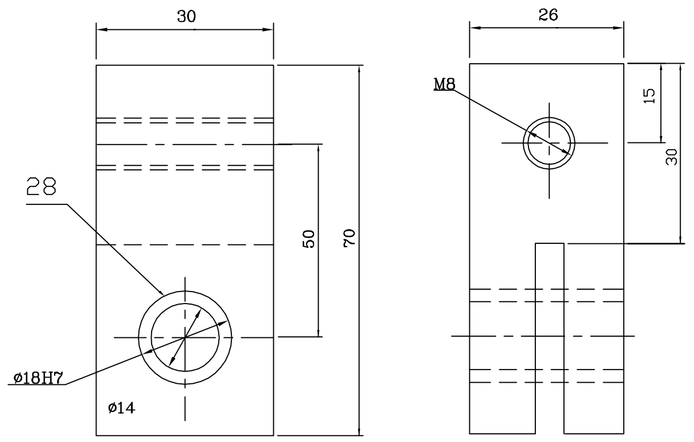

NOTE: TO BE BRIGHTLY NICKEL PLATED.

DET.POS. 11

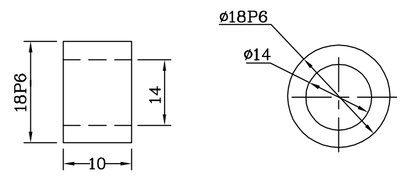

DET.POS. 28

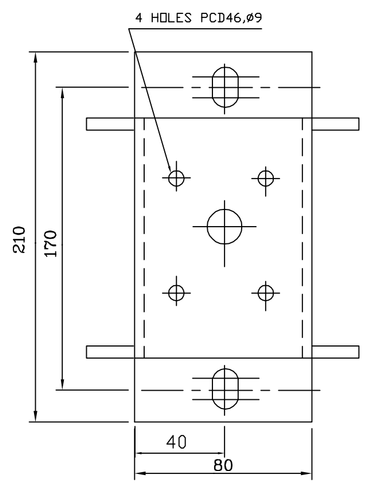

DETAIL-H

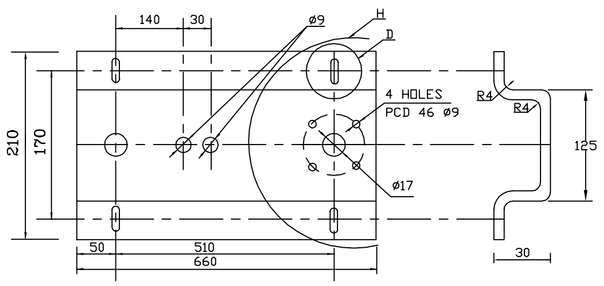

NOTE : TO BE PAINTED WITH EPOXY PAINT.

DET.POS. 17

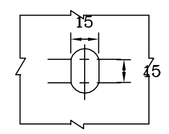

DETAIL - D

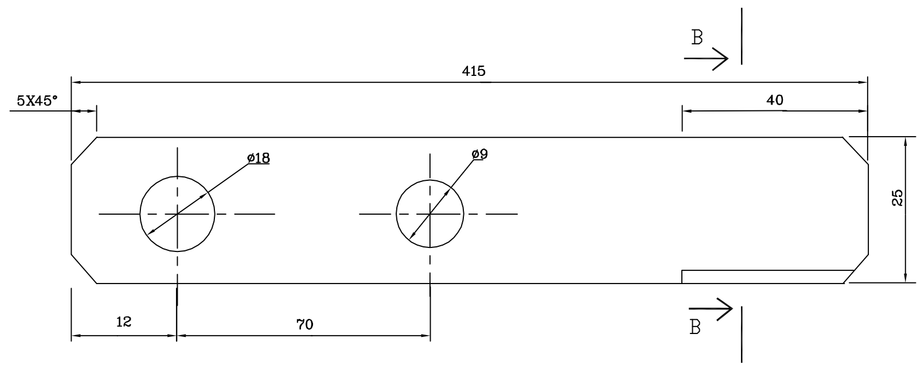

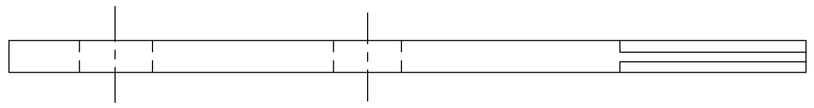

DET.POS. 16

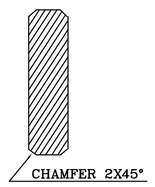

SECTION - BB

ITEM NO.	DESCRIPTION	DRAWING NO.	MATL SPEC.	UNIT	QTY
28	GUIDE CONTACT BUSH		BRASS	NO	2
27	CONNECTING SCREW	1-79-006-00068	IS 2062	NO	3
26	SPRING 16 SWG		SPRING QUALITY PHOSPHUR BRONZE	NO	2
25	LUG-25SQ.MM		BRASS	NO	1
24	CLAMP PL.10X26X120		BRASS	NO	1
23	SCREW M8X16		IS 1363-8-46	NO	3
22	SPRING WASER M12 NATURAL FINISH		IS3063	NO	2
21	SCREW M12X25		IS 1363-633-4-6	NO	2
20	SPRING WASHER M16 NATURAL FINISH		IS 3063	NO	2
19	SCREW M18X32		IS 1363-B-4-6	NO	2
18	CABLE WITH LUG			NO	1
17	FASTENING PLATE		IS 1079-633-34	NO	2
16	KNIFE		COPPER	NO	1
15	NUT M8		IS 1663-B-4	NO	3
14	BLANK				
13	SPRING WASHER M8 NATURAL FINISH		GI IS 3063	NO	2
12	SCREW M8X30			NO	2
11	GUIDE CONTACT PL.32X30X70		IS-2062 STEEL	NO	2
10	CLAMP PL.10X26X153		BRASS	NO	1
09	NUT M6		IS1363-B-4	NO	2
08	SCREW M6X45		GI IS2269-B-8.8	NO	2
07	WASHER M10		GI IS2016 STEEL	NO	5
06	NUT M10		IS1363-B-4	NO	1
05	SCREW M10X32		IS1363-B-4.6	NO	3
04	SCREW M10X19		IS1363-B-4.6	NO	4
03	KNIFE CONTACT SH-3.15X30X249		COPPER	NO	2
02.	CLAMP PL.10X26X205		BRASS	NO	1
01.	PIN INSULATOR	3-79-006-00100	96-150-132	NO	3

NTPC
STANDARD

REV	DATE	CHD	K.S.S	
00		APPD	S.R	

BHARAT HEAVY ELECTRICALS LIMITED,
UNIT: BOILER AUXILIARIES PLANT,
RANIPET:632 406.

DEPT CODE		NAME	SIGN	DATE
M	DESN	VIJAYALAKSHMI	Sd	18.09.12
	CHD	REMYA	Sd	18.09.12
	APPD	S.R		18.09.12

TITLE
DISCONNECTING SWITCH ASSEBLY (95 KV SYSTEM)

SCALE : NTS

BHEL/BAP DRG NO.
1-00-114-28739

REV 00

Size A1

SHEET NO 03 OF 03

BHEL RANIPET	CHECK LIST FOR DISCONNECTING SWITCH MEANT FOR ESP APPLICATION	
REF.NO.	REVISION NO.	EFFECTIVE DATE
CKL:E:803	05	15 04 2007

TITLE : CHECK LIST FOR DISCONNECTING SWITCH MEANT FOR ESP APPLICATION

		SIGNATURE
PREPARED BY	: K C GANDHI PARIMALAM	
REVIEWED & APPROVED BY	: S ANIL KUMAR	

ISSUED & CONTROLLED BY :: QUALITY ASSURANCE
BHEL, RANIPET – 632 406

DOCUMENT STATUS

☐ INFORMATION COPY

☐ CONTROL COPY

*** It is a control of copy only if the mark against the control copy is in other than black color. Otherwise it will be an uncontrolled copy. Check for current revesion.**

ISSUED TO :	CONTROL COPY NO.
	PAGE : Page 01 OF 04

Note:

1. **This is a standard check list for Disconnecting switch (STANDARD) MEANT FOR ESP APPLICATIONSS. Any additional project specific requirements highlighted in PO or relevant TEP shall be complied with. Any contradiction noticed in this check list with respect to enquiry requirements/TEP shall be highlighted in the offer.**

2. **If the acceptance criteria given in PO or TEP or approved data sheet is stringent then the one specified in this above, the requirement as per PO/TEP/data sheet will supercede the one given in the check list.**

BHEL RANIPET	CHECK LIST FOR DISCONNECTING SWITCH MEANT FOR ESP APPLICATION	
REF.NO.	**REVISION NO.**	**EFFECTIVE DATE**
CKL:E:803	**05**	**15 04 2007**

RECORD OF REVISION

REV.NO	Effective Date	Remarks
00	15 08 96	Original Issue
01	10 12 96	Impulse test level has been changed from 170 KV (P) to 150 KV based on the discussion with Engineering.
02	29 05 97	Clause No. 2 (b) on paint shade revised to refer TEP.
03	20 08 97	Typographical error in III (e) corrected. PO/Enquiry referring CKL:E:803 Rev.02 can also refer CKL:E:803 Rev.03 as there is no change in the content read with record of revision.
04	18 06 98	Revised based on second PCM dt 14 06 1998.
05	15 04 2007	Revised to include more clarity on Lightning Impulse and Dry PF type tests and Included that Dry PF and Impulse values shall be as per BHEL drg (or) BHEL approved sub vendor drgs

The following tests/checks are to be done:-

I) <u>Routine Test (Sample size: IS 2500/Part I, IL-I, AQL 4%)</u>

a) Visual Inspection for make, sl.No. Damage if any on the insulator.
b) Dimensional checks as per drawing on randomly selected sample.

Following dimensions Should be measured and recorded in dimensional report (DR).

- **Flange dimensions**
- **PCD**
- **No. of holes**
- **Box overall size**
- **Hole size**

c) Operational checks – Operate the disconnecting switch 10 times observe the operation of knife edge – satisfactory / not satisfactory.
d) Ensure perfect matching of knife with knife contact as per drawing (i.e. stopper plate to be welded in position only after ensuring perfect matching).
e) Review of TC for following:-

- **Insulator as per drawing – Make of insulator: BHEL /WS insulator / Jayashree**
- **Raw material as per TEP**
- **Routine and acceptance test**

f) IR and HV Test

II) <u>Special Requirements: with reference to surface treatment and painting</u> .

a) Enclosures are to be pre-treated as per IS 6005 and painted as per Purchase specification (Phosphated to Min class B as per IS 6005).

b) Paint shade and thickness as per DrgsTEP/PO conditions shall be ensured.

c) Adhesion test for painting: As per IS 101

This shall be checked by cross cut tape to ensure that the paint shall not be peeled off at the squares and sides formed by scratches on representative sample.

III) **Type tests (Review of Type test certificates for test conducted on identical design)**

The following valid type tests reports as per BHEL/Ranipet approved drgs (not older than five years from BHEL/Ranipet Purchase Order date) shall be submitted by Disconnecting Switch manufacture during final inspection to BHEL/Ranipet or BHEL Ranipet authorized Inspection Agencies. If Disconnecting Switch Manufactures not in a position to submit the valid type tests , then they have to organize for all the type tests without any cost implication to BHEL/Ranipet within reasonable time without affecting the project schedules. Acceptance Levels / values shall be as per BHEL/Ranipet drgs/ Sub vendor BHEL approved drgs .

a) **Torsion and tensile test for bonding between metal inserts and insulators.**
b) **Mechanical Endurance test**
c) **Degree of protection test (IP 55)**
d) **One Minute Dry Power Frequency Test for one minute.**
e) **Lightning Impulse Test (with 1.2/50Micro second wave) for 15 shots with maximum of 2 flashover allowed) on negative polarity. This is to be done on both open and closed conditions. (Generally as per IS 9921/IS 2071 shall be done)**

No of shots: : 15 Shots in Negative Polarity generally as per clause no: 3.1.6 of IS 9921 Part-4 .

ACCEPTANCE CRITERIA

Disconnecting Switch has passed the test successfully if the number of the disruptive discharges shall not exceed two for each test condition.

IV. Acceptance Test

1. **Routine HV Test at 2.5 KV for 1 minute**
2. **IR Test after HV test: IR > 10 Mega Ohm when checked with 500 V meggar.**

TITLE : TECHNICAL SPECIFICATION FOR BOUGHT OUT ITEM FOR ESP

ITEM : DISCONNECTING SWITCH

CUSTOMER : M/S. NATIONAL THERMAL POWER CORPORATION

	NAME	DESIGNATION	SIGNATURE	DATE
PREPARED	**R.VENKATARAMAN**	**SAE**	**-SD-**	**04.02.2013**
CHECKED	**S.RANGARAJAN**	**DGM**	**-SD-**	**04.02.2013**
APPROVED	**S.RANGARAJAN**	**DGM**	**-SD-**	**04.02.2013**

ISSUED BY

EDC / ECI

REVISION NO: 02 Clause 5.1.5,5.1.7,7.0.0 &8.0.0 revised INITIAL RELEASE: 04.02.2013

REVISION NO :01 INITIAL RELEASE: 20.05.2008

REVISION NO :00 INITIAL RELEASE: 20.12.2003

1.0.0 **SCOPE OF SUPPLY:**

The scope of supply of DISCONNECTING SWITCH includes the manufacture, Inspection, testing, packing and delivery.

2.0.0 **APPLICATION:**

2.1.0 The DISCONNECTING SWITCH is used in ELECTROSTATIC PRECIPITATOR to disconnect the field from high voltage in OFF condition and to earth the field. The high voltage encountered in the system is in the order of 70 KV / 95 KV, DC (peak) unfiltered voltage.

3.0.0 **APPLICABLE STANDARDS:**

3.1.0 The DISCONNECTING SWITCH shall be manufactured as per the following standards.

3.1.1 IS 13947 (IP-55) - Low voltage Switch gear and Control gear: switches, disconnectors, switch disconnectors and fuse combination units.

3.1.2 IS 2071 - Method of High voltage testing.

3.1.3 IS 2544 - Specification for porcelain post insulators.

3.1.4 IS 5350 - Dimensions of indoor & outdoor porcelain post insulators & post insulator units for systems with Nominal voltages greater than 1000V.

4.0.0 **SITE CONDITIONS:**

4.1.0 The DISCONNECTING SWITCH shall be manufactured considering the following site conditions.

4.1.1	Ambient temperature	: 5 Deg.C to 50 Deg.C
4.1.2	Design ambient temperature	: 50 Deg.C
4.1.3	Relative humidity	: 100%
4.1.4	Environment condition	: Highly polluted, abrasive & dusty atmosphere
4.1.5	Location	: Outdoor

5.0.0 **GENERAL REQUIREMENTS:**

5.1.0 The DISCONNECTING SWITCH (DC Switch) shall be of welded construction. The surfaces and edges shall be smooth. Burr if any shall be removed.

5.1.1 All parts of DC SWITCH shall be of corrosive resistance.

5.1.2 All the current carrying parts shall be made of Tinned copper & connecting ends shall be made of Nickel Chromium plated brass.

5.1.3 The enclosure shall be suitable for IP 55 Degree of protection.

5.1.4 The DC SWITCH for 70KV system shall be capable of withstanding 170 KV (peak) (negative), 1.2/50 microsecond impulse withstand voltage. The DC SWITCH for 95 KV system shall be capable of withstanding 250 KV (peak) (negative), 1.2/50 microsecond impulse withstand voltage.

5.1.5 The DC SWITCH for 70 KV system shall be capable of withstanding power frequency dry withstand voltage of minimum 75 KV (rms) for 1 minute. The DC SWITCH for 95 KV system shall be capable of withstanding power frequency dry withstand voltage of minimum 95 KV (rms) for 1 minute

5.1.6 The design of knife contact shall be such that after repeated ON/ OFF operations for 500 times, the knife contact gap shall not show an increased gap of more than 0.4 mm.

5.1.7 The insulator shall be any one of the following makes. BHEL/JAYSHREE/ W.S.INDUSTRIES/UCE.

5.1.8 The bonding of metal parts, shall withstand a torsion load of atleast 15 Kg-m.

5.1.9 The bonding of metal parts, shall withstand a tensile load of 4500 N (459 Kg).

5.1.10 The Disconnecting switch shall be suitable for 70 KV / 95 KV DC (Peak)

5.1.11 Painting colour shall be RAL-5012.

6.0.0 **INSPECTION AND TESTING:**

6.1.0 The DC SWITCH shall be inspected and tested as per the following documents.

1. BHEL Purchase order.
2. BHEL / NTPC approved vendor drawings.
3. BHEL Technical specification (TEP).
4. Inspection checklist.

7.0.**0** **PACKING**:

Individual disconnecting switch shall be packed in polythene sheets and wooden crates to avoid any damage to the DC SWITCH, during transit or outdoor storage. One of the square flanges shall be covered with MS dummy plate of minimum 3mm thick with neoprene gasket.All other open flanges shall be covered with wooden/card board dummy

covers of minimum 6mm thick with suitable packing material.The packing shall be suitable for storage at outside for a period of one year.

8.0.0 NAME PLATE

The nameplate shall be made of non-corrosive material indicating manufacturers name, Serial number, type (variant number), etc.

9.0.0 DOCUMENTATION :

The supplier shall submit six sets of all detailed drawings & in soft copy prepared in autocad-14 specifically for this project , for approval within 15 days from the date of purchase order. After final approval the supplier shall also submit the approved drawings in CD apart from 6 hard copies.

10.0.0 This specification meets NTPC contract specification. Hence no deviation shall be taken by the vendor.

****

Sl. NO.	DESCRIPTION	BHEL/NTPC Requirements	##Specific confirmations by the vendor

ITEM: DISCONNECTING SWITCH

01	**Type Test Requirements**	1. The vendor shall carryout the following type tests in the presence of BHEL/NTPC for which 15 days advance notice is to be given to BHEL/Ranipet. The **Type Test Procedure** covering test setup, instruments to be used, acceptance norms, different test parameters and precautions to be taken for these type tests are to be submitted for BHEL/NTPC review and approval at the time of offer itself to prove their design capability ✓ Dry Power Frequency Test for one minute at 70KV (RMS) for if 300MM electrode spacing ESP field. ✓ Lightning Impulse Test 170KV (Peak negative) with 1.2/50Micro second wave if 300MM electrode spacing ESP field. ✓ Dry Power Frequency Test for one minute at 95KV (RMS) if 400MM electrode spacing ESP field. ✓ Lightning Impulse Test 250KV (Peak negative) with 1.2/50Micro second wave if 400MM electrode spacing ESP field	
		2. Incase the vendor has already conducted such specified type test with in last Five Years from the NTPC Bid Opening Date 29 09 2014, they may submit all the type test reports for the BHEL/NTPC review. The report should be for the test conducted on the similar design of the Disconnecting Switch as proposed in this enquiry. In addition vendor should certify that "No design change". These type tests should have been carried out at independent lab and witnessed by either BHEL or NTPC. However BHEL/NTPC reserves the right to accept or reject the reports. If reports are accepted by BHEL/NTPC, vendor need not repeat the type test other wise all these tests are to conducted at free of cost within reasonable time.	
		3. BHEL/NTPC if insisting for repetitions of type tests, then type test charges will be paid additionally. **The type test charges being indicated by the vendor will be taken to arrive total cost and included for comparative statements. Accordingly vendor shall indicate type test charges separately in the offer.**	
		4. **The type test charges being indicated by the vendor will be released only after o**btaining clearance from NTPC for type tests reports and BHEL/NTPC treats this as repetitions of type test.	

Sl. NO.	DESCRIPTION	BHEL/NTPC Requirements	##Specific confirmations by the vendor

ITEM: DISCONNECTING SWITCH

02	**Check Lists Requirement**	BHEL Check List Ref no: CKL:E:803 Rev 05 – Copy enclosed.	
03	**Pin Insulator used in Disconnecting Switch**	Pin Insulator shall be from ✓ M/S WSI ✓ M/S BHEL ✓ M/S JSI ✓ M/S UCE ✓ M/S ADITYA BIRLA	
04	**Painting Requirements**	1) No separate approval on painting schedule is envisaged for this item from NTPC . However the painting requirement like paint shade and painting thickness etc are to be finalized by the vendor with BHEL/NTPC as indicated in the relevant BHEL specification/drg/BOM and enquiries etc	
		2) Vendor shall confirm to ###surface preparations as follows:- **###SURFACE PREPARTIONS** : 7 TANK PROCESS AS PER IS 6005 **PRIMER** : RED OXIDE PRIMER **FINISH PAINT** : EPOXY PAINT POWDER COATING	

##Supplier signature with seal

Necessarily to be filled up by the vendor at the time of offer itself otherwise their offer may not be considered w.r.t Quality Requirements being customer specific requirements.

DRAWING NO.

ALL DIMENSIONS ARE IN MILLIMETRES

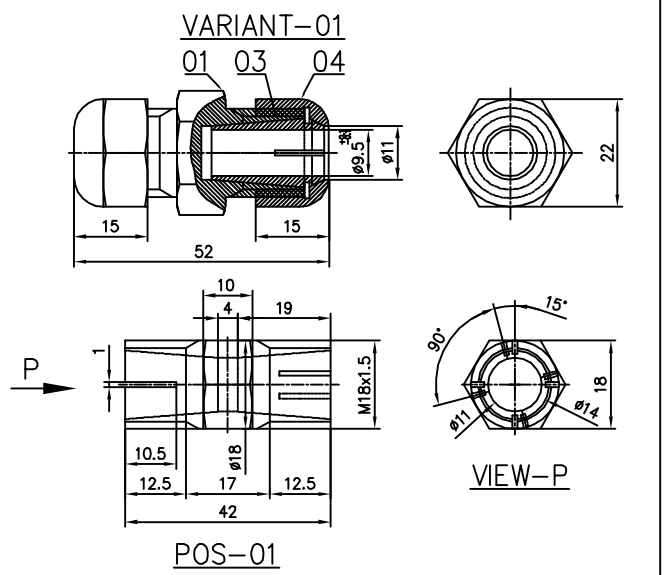

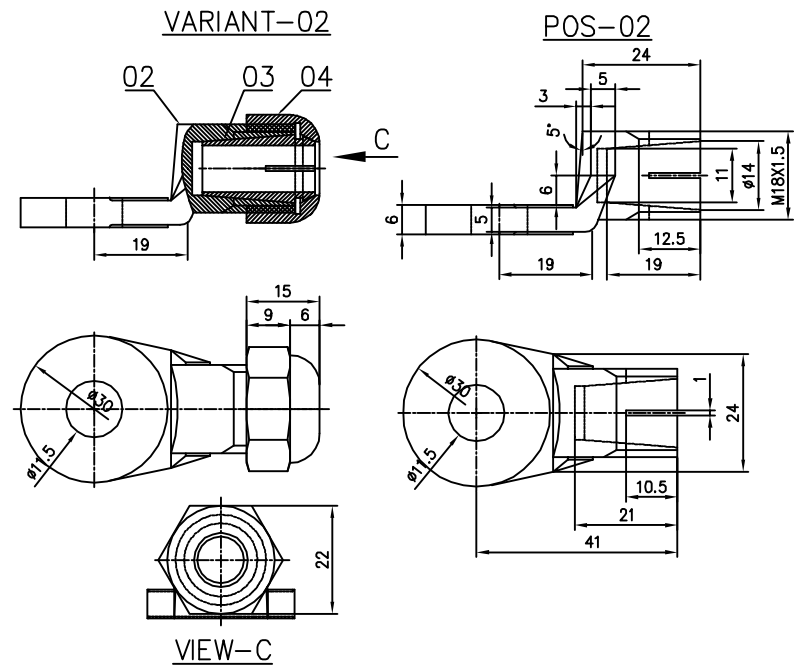

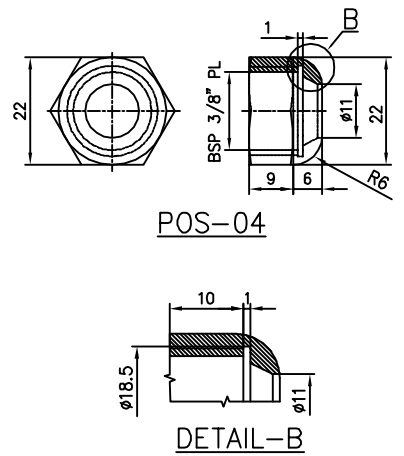

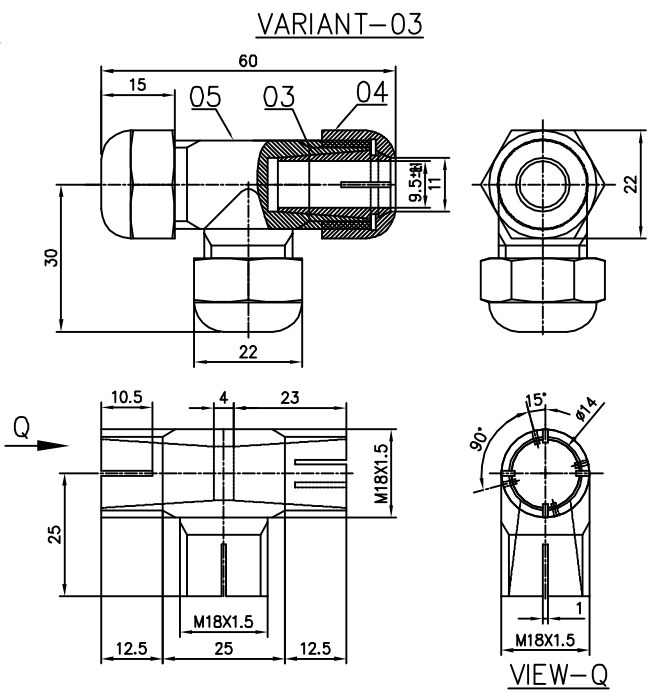

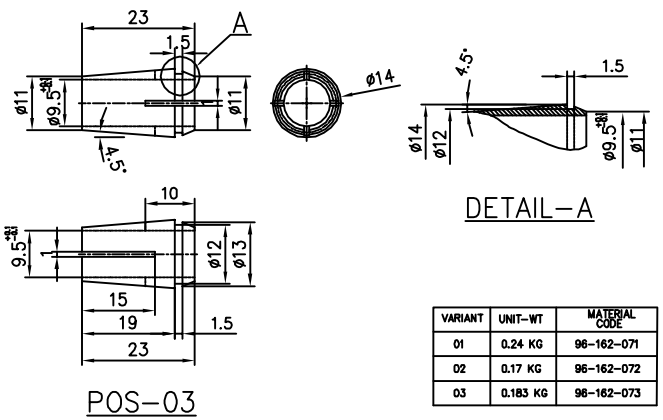

NOTES:-

SURFACE TO BE FINISHED BY NICKEL PLATING OF TH 40 μ.

VARIANT	UNIT-WT	MATERIAL CODE
01	0.24 KG	96-162-071
02	0.17 KG	96-162-072
03	0.183 KG	96-162-073

VARIANT NO	ITEM NO	DESCRIPTION	STD	DRAWING NO.	ITEM NO	MATL. CODE / MATL. SPEC	A / C	DI	UNIT	UNIT WT. / QUANTITY	DI	ZONE
	05	TEE				LEADED BRASS						
	04	ADAPTOR								0.060		
03	03	SLEEVE				AS PER				3		
	04	ADAPTOR				IS 3488-86/				0.020		
	03	SLEEVE				BS 2847 CZ 122				3		
02	02	LUG				BS 2847 CZ 122				0.050		
	04	ADAPTOR				BS 2847 CZ 122				1		
	03	SLEEVE				BS 2847 CZ 122				0.020		
01	01	UNION SCREW				96 162 071				2		
						BS 2847 CZ 122				0.100		
										1		

REV	DATE	ALTERED			REV	DATE	ALTERED			REV	DATE	ALTERED			REV	DATE	ALTERED		
07	10.03.2012	CHECKED	C.Ganesh		06	20.03.1996	CHECKED	S.Rangarajan		05	28.06.1993	CHECKED		-SD-					
ZONE	Retraced in AutoCAD				ZONE	Nickel plating thickness altered from 40microns to 15 microns				ZONE	SPECIFICATION NUMBER CHANGED								

REV	DATE	ALTERED			REV	DATE	ALTERED			REV	DATE	ALTERED			REV	DATE	ALTERED		
04	08.09.1990	CHECKED		-SD-	03	06.03.1989	CHECKED		-SD-	02	20.09.1984	CHECKED	GM	-SD-	01	08.11.1983	CHECKED	GM	-SD-
ZONE	MATERIAL SPECIFICATION CHANGED				ZONE	VARIANT-03 ADDED CHROMIUM PLATING CHANGED TO NICKEL PLATING				ZONE	POS 01 & 03 INTERNAL PARALLEL BORE CHANGED TO TAPER, M16 THREAD CHANGED TO M18X1.5 AND PROVISION FOR SPANNER HOLD.				ZONE	NOTES CORRECTED			

CAUTION: The information on this drawing is the property of BHARAT HEAVY ELECTRICALS LTD. It may not be used directly or indirectly in any way detrimental to the interest of the company.

TYPE OF PRODUCT OR NAME OF CUSTOMER/PROJECT: ELECTROSTATIC PRECIPITATOR

BHARAT HEAVY ELECTRICALS LTD.
UNIT: BOILER AUXILIARIES PLANT.
RANIPET - 632 406.

	NAME	SIGN	DATE	NO. OF VAR.
DRN	G.M.NATHAN		08.08.1988	
CHD	G.M		27.12.1988	
APPD	G.S		27.12.1988	

DEPT/ACCS	GRADE OF UNTOL.DIM	SCALE	WEIGHT (KG)	REF. TO ASSY/OLD DRG.	ITEM NO.	NO. OF ITEMS
CODE 862	C / M / F	N.T.S			-	

TITLE	CARD CODE	DRAWING NO.	REV
CONNECTING SCREW VARIANT-01,VARIANT-02 & VARIANT-03	U 01	1-79-006-00068	07

Size A1

FIRST ANGLE PROJECTION (ALL DIMENSIONS IN MILLIMETRES)

DRAWING NO 2-79-006-00075/02

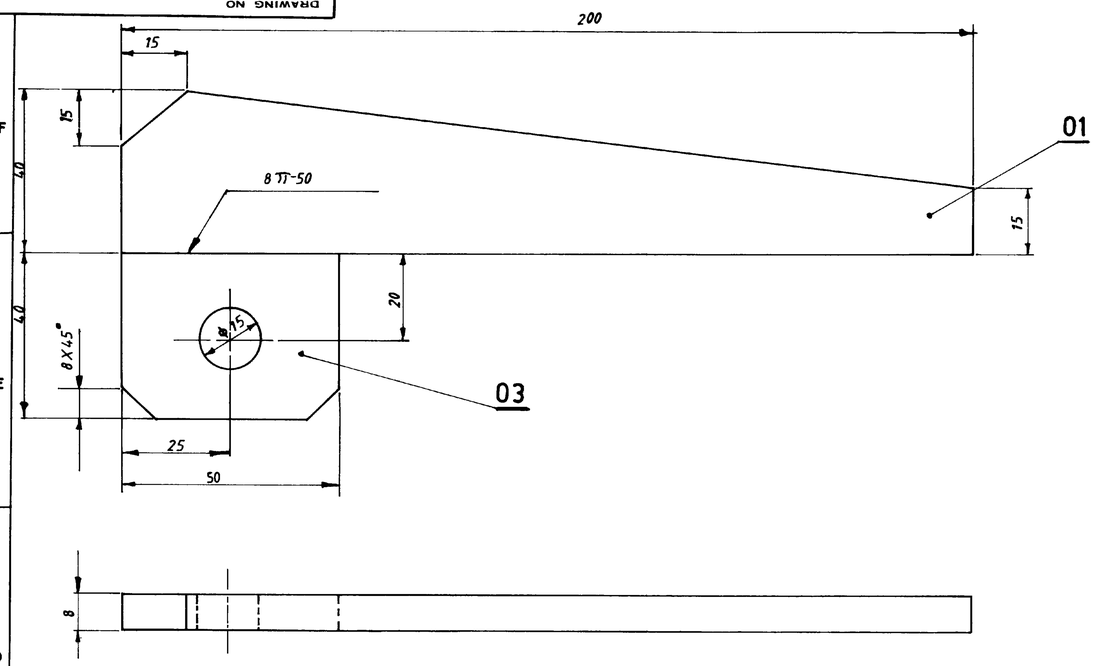

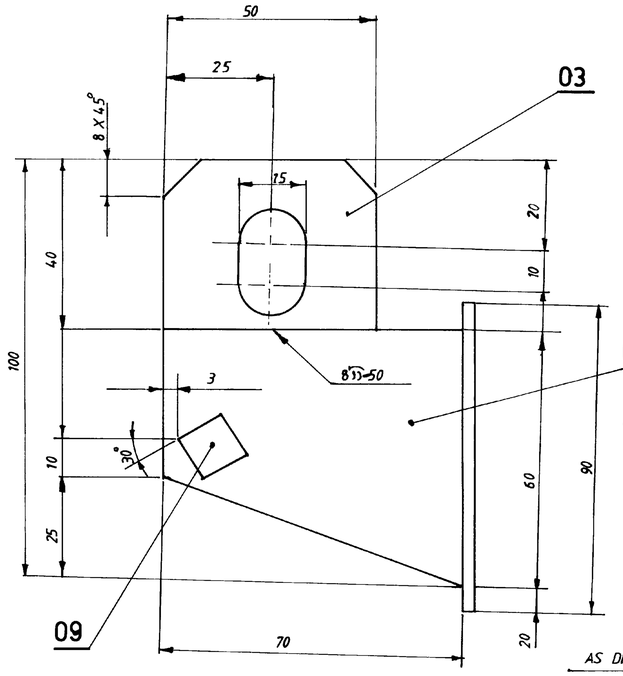

TYPE OF WELD	ELECT SPECN	LENGTH OF WELD
8 ⌒	E-6013	0,2m
5 ◺	E-6013	0,5m

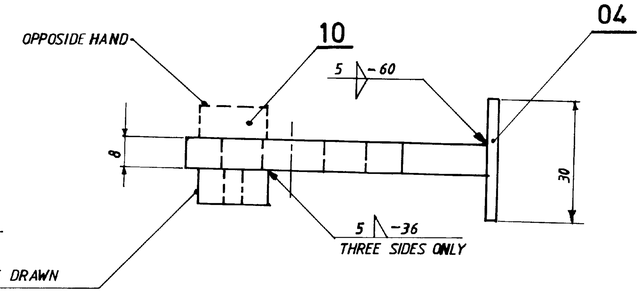

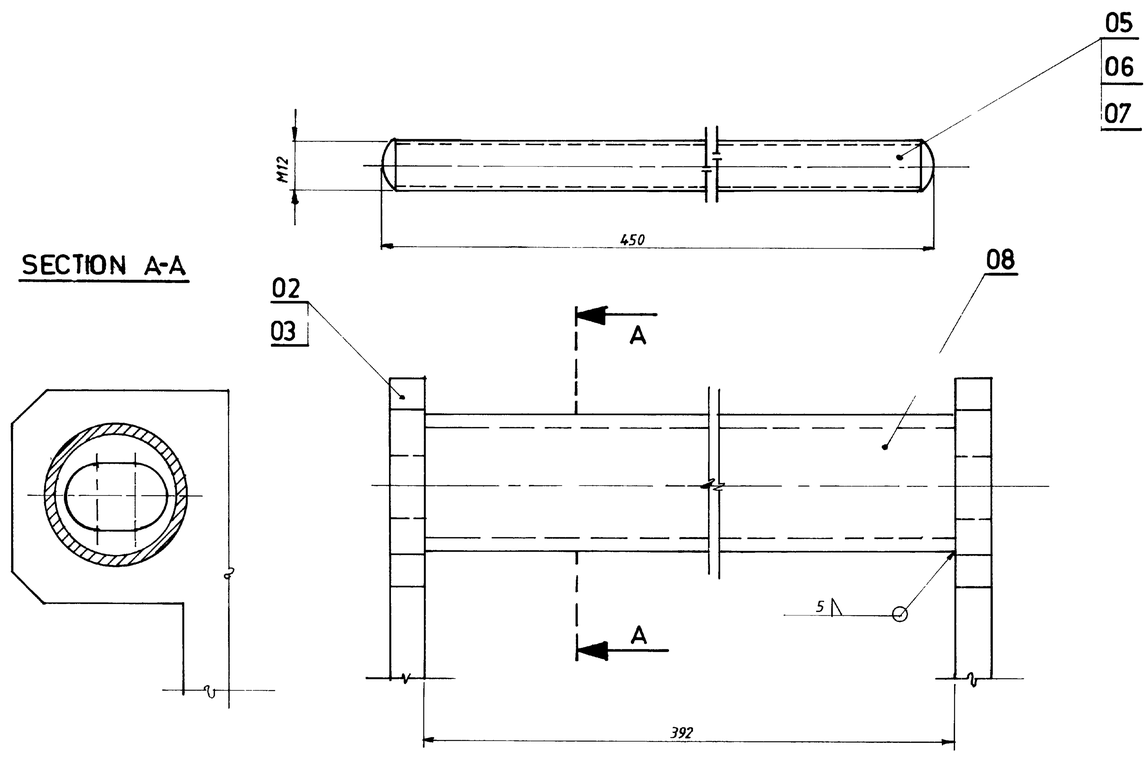

VARIANT NO	ITEM NO.	DESCRIPTION	STD	DRAWING NO	ITEM NO. / VAR NO.	MATL. CODE / MATL SPEC.	A / C	UNIT	UNIT WT. / QTY	GS	ZONE
	10	PLATE 8X12X12				IS-226-			0,01 / 1		
	09	PLATE-8X12X12				IS-226-			0,01 / 1		
	08	TUBE Ø33.7X3,25-392 LONG				IS-1161- YST 22			0,79 / 1		
	07	NUT-M12				IS 363-B-4			0,017 / 2		
	06	WASHER-M12				IS 2016			0,065 / 2		
	05	ROUND Ø 16-450				IS-2062-			0,70 / 1		
	04	PLATE-5X30X90				IS 226-			0,1 / 2		
	03	PLATE-8X40X50				IS-226-			0,13 / 4		
	02	PLATE-8X60X70				IS-226-			0,26 / 2		
	01	PLATE 8X40X200				IS-226-			0,5 / 2		

REV	DATE	ALTERED / CHECKED
02	20.6.93	ALT. / CHD.

IS NUMBER'S YEAR DELETED.
SPECIFICATIONS NUMBER DELETED.

REV	DATE	ALTERED / CHECKED
01		

ZONE

TYPE OF PRODUCT OR NAME OF CUSTOMER/PROJECT: ELECTROSTATIC PRECIPITATOR

Bharat Heavy Electricals Ltd., BOILER AUXILIARIES PROJECT RANIPET 632 406

	NAME	SIGN	DATE	NO. OF VAR
DRN	M BOOPATHY		16.02.85	
CHD	S J P		16 02 85	
APPD	B GOVIDAN		16 02 85	

DEPT	GRADE OF UNTOL DIM	SCALE	WEIGHT (kg)	REF TO ASSY / OLD DRG	ITEM NO.
CODE 862	C/MIP	1:1	393		

TITLE	CARD CODE	DRAWING NO	REV.
HINGE	U 01	2-79-006-00075	02

RE-TRACED

CAUTION THE INFORMATION ON THIS DOCUMENT IS THE PROPERTY OF BHARAT HEAVY ELECTRICALS LTD. IT MUST NOT BE USED DIRECTLY OR INDIRECTLY IN ANY WAY DETRIMENTAL TO THE INTEREST OF THE COMPANY

R: 05-228 C

FIRST ANGLE PROJECTION (ALL DIMENSIONS IN MILLIMETRES)

DRAWING No. 2-79-006-00148

CAUTION
THE INFORMATION ON THIS DOCUMENT IS THE PROPERTY OF BHARAT HEAVY ELECTRICALS LTD. IT MUST NOT BE USED DIRECTLY OR INDIRECTLY IN ANY WAY DETRIMENTAL TO THE INTEREST OF THE COMPANY.

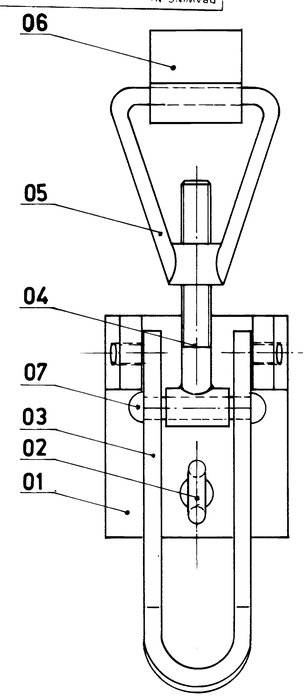

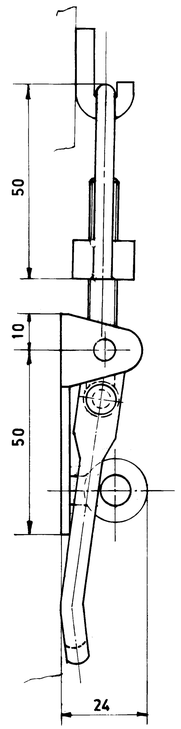

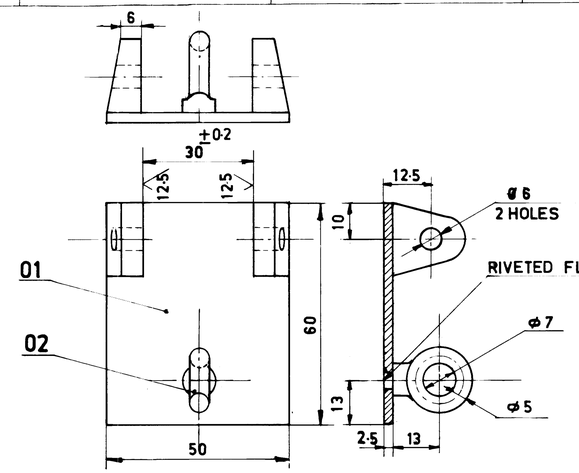

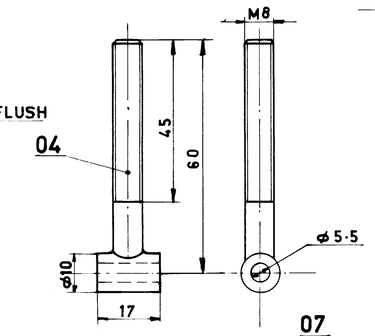

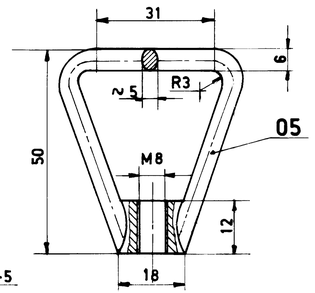

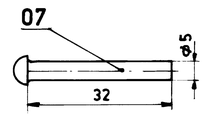

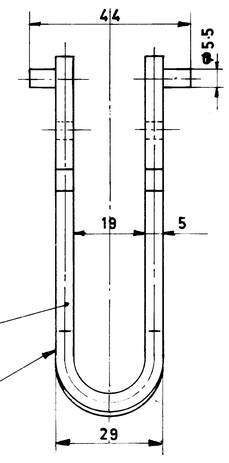

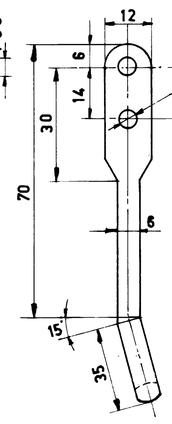

REF : PRQA : 590 FOR PAINTING
REF : PRQA : 500 FOR UNTOL. DIMNS

NOTE:- SUITABLE SURFACE TREATMENT SHALL BE DONE TO PREVENT RUSTING

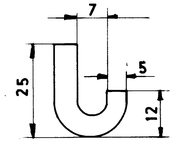

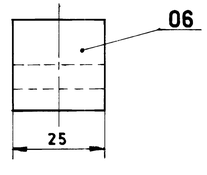

VARIANT NO.	ITEM NO.	DESCRIPTION	STD	DRAWING NO.	ITEM NO. / VAR NO.	MATL CODE / MATL SPEC	A C	UNIT	UNIT WT / QTY	GS	ZONE
	07	RIVET ø5 -32		FORGING		IS 226/62			0.0.20 / 1		D 2
	06	HOOK		FORGING		IS 226/62			0.0.30 / 1		A 5
	05	CLAMP		FORGING		IS 226/62			0.0.30 / 1		E 1
	04	EYE BOLT		FORGING		IS 226/62			0.0.40 / 1		E 3
	03	LINK ROD 12X5-250		FORGING		IS 226/62			0.1.2 / 1		D 5
	02	EYE		FORGING		IS 226/62			0.0.40 / 1		E 5
	01	BRACKET		FORGING		IS1079-63ST 34			0.0.80 / 1		E 5

TYPE OF PRODUCT OR NAME OF CUSTOMER/PROJECT

Bharat Heavy Electricals Ltd.,
BOILER PLANT UNIT
TIRUCHIRAPALLI-620 014

	NAME	SIGN	DATE
DRN	M. NATRAJ		18.10.81
CHD	S.M.N		
APPD	G.S		20.10.81

NO. OF VAR

REV	DATE	ALTERED / CHECKED
01		

ZONE

DEPT: AQCS
CODE: 250
GRADE OF UNTOL. DIM: -e/M/+
SCALE: 1:1
WEIGHT (kg): 0·38
REF TO ASSY / OLD DRG
ITEM NO.

TITLE: ECCENTRIC LOCK
CARD CODE: U 01
DRAWING NO.: 2-79-006-00148
REV: 00

Size A2

05-228/C

DRAWING NO. 2-79-006-00149

ALL DIMENSIONS ARE IN MILLIMETRES

FOR PRODUCTION
REF. PR:QA:590 FOR PAINTING
REF. PR:QA:500 FOR UNTOL. DIMNS.
REF. APPLICABLE GMS FOR MATCODE&SPEC.

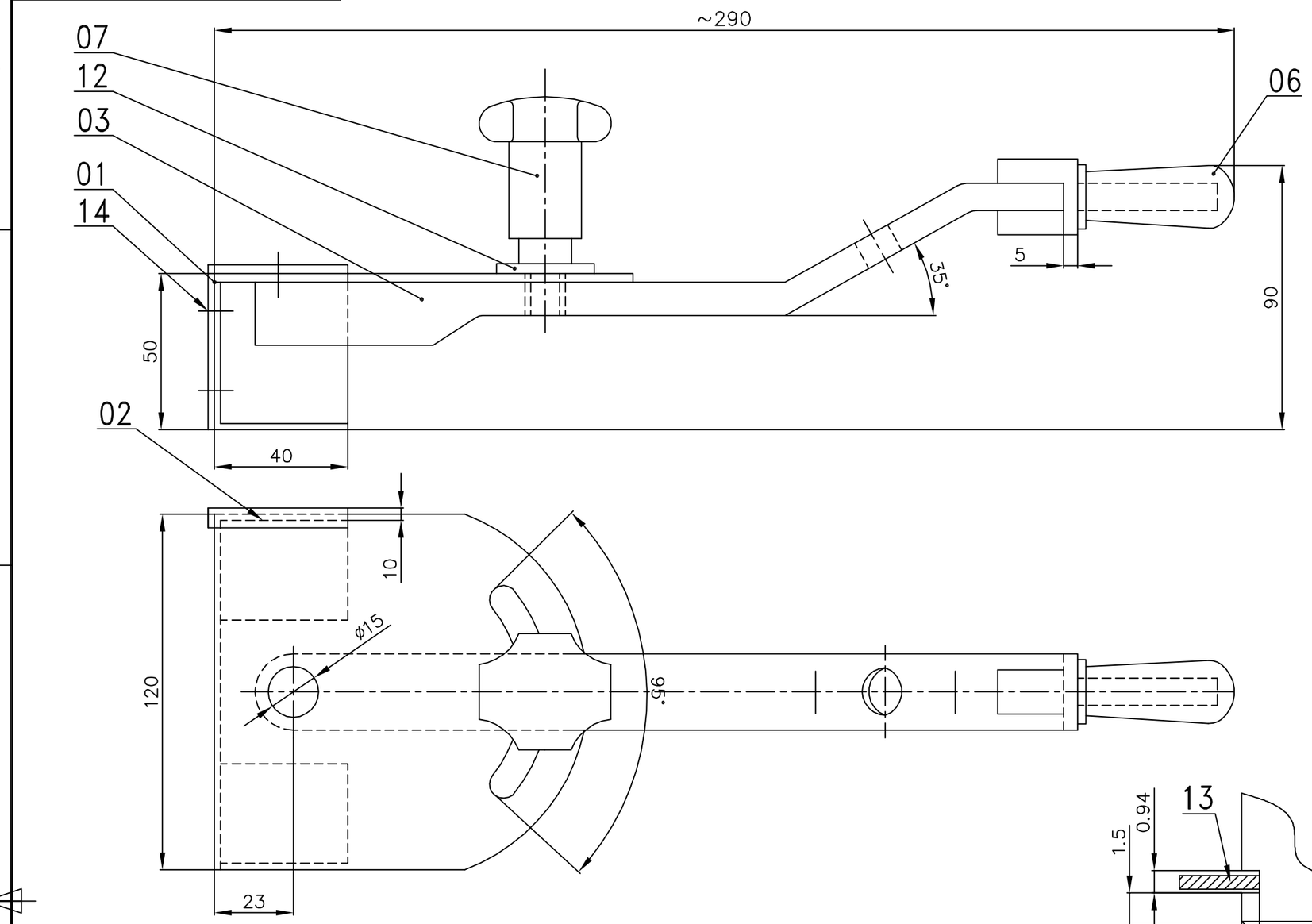

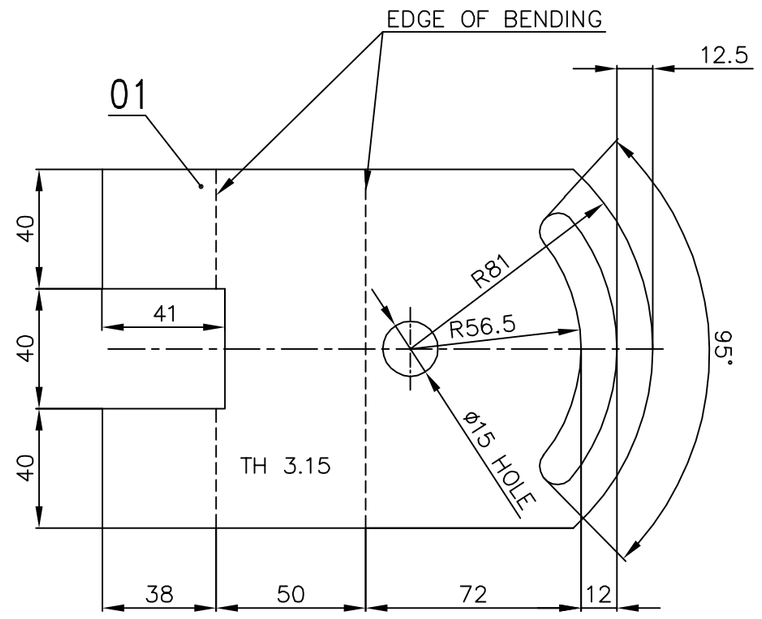

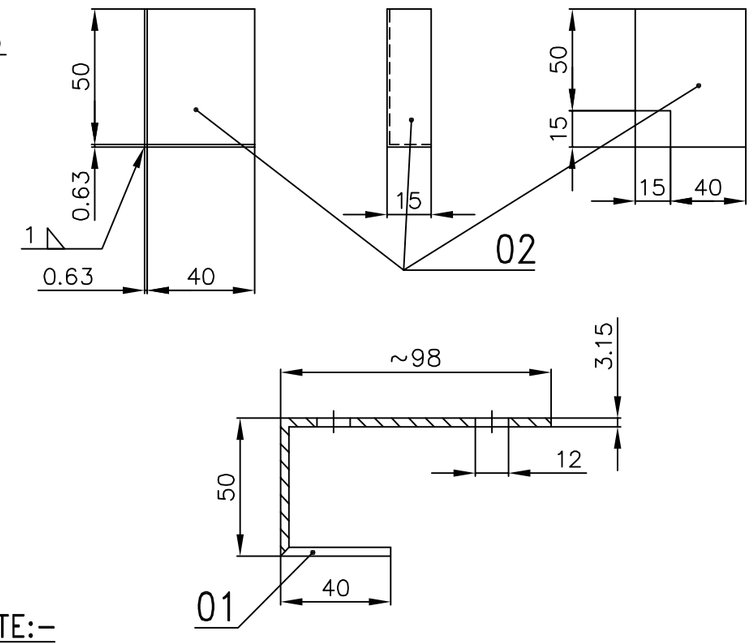

NOTE:-

DRILL HOLE ø15 AFTER SECURING ITEM NOS 08,09,10 AND 11 REMOVE WASHER ITEM NO 11 FOR ASSY TAP THE HOLES FOR ITEM NO 14 IN POSITION.

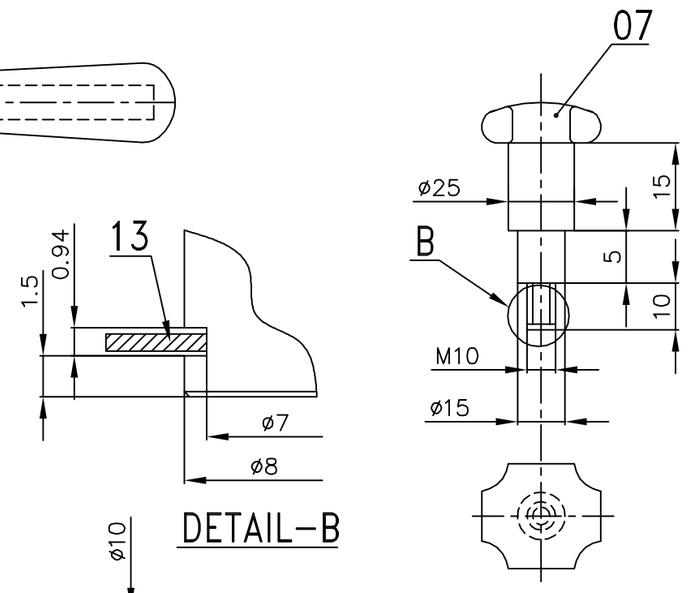

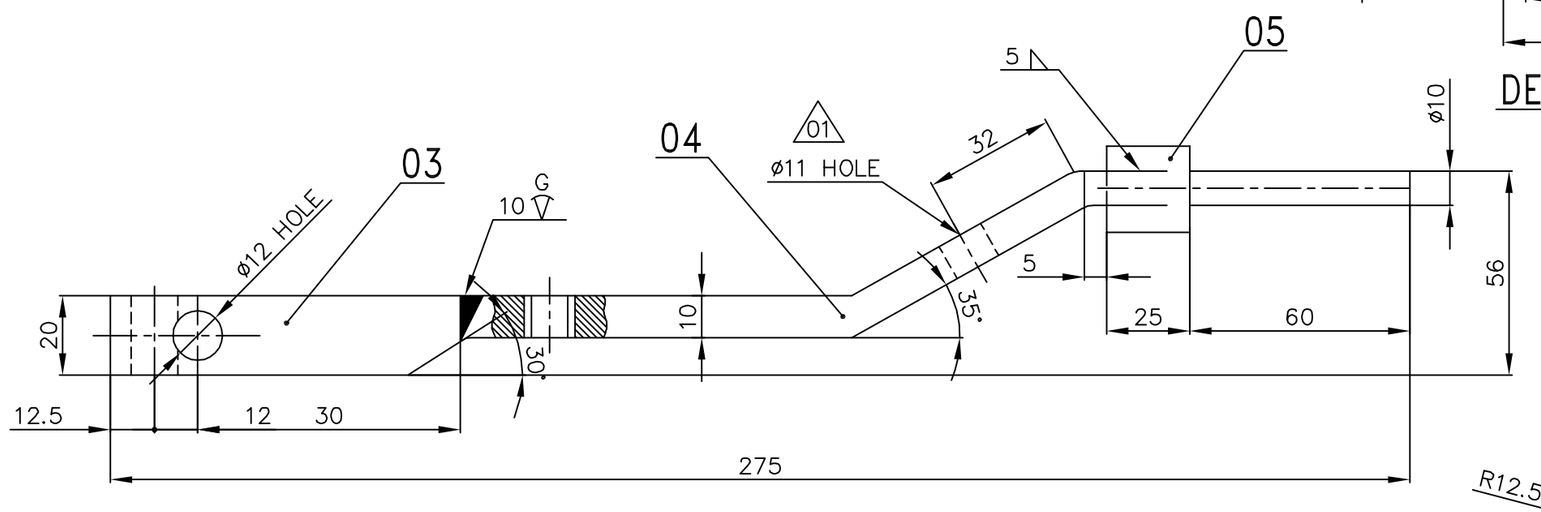

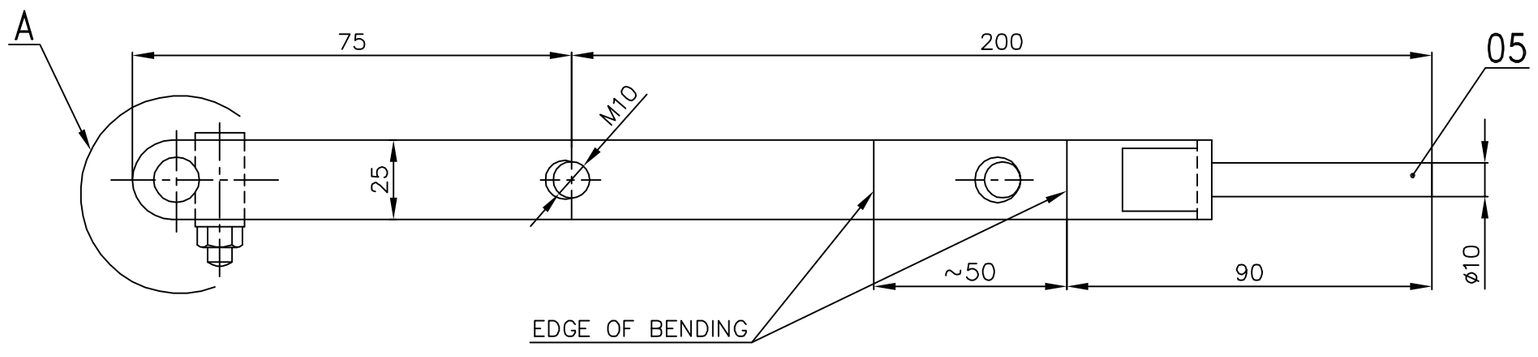

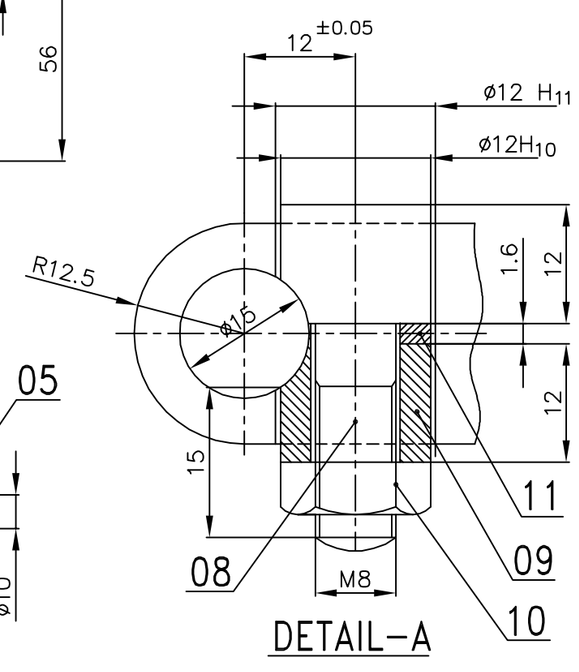

VAR NO	ITEM NO	DESCRIPTION	CAT	DRAWING No.	ITEM NO / VAR NO	MATL CODE / MATL SPECN	A/P C/P	UNIT / DI	UNIT WT / QTY	GS	ZONE
	14	CHEESE HEAD SCREW M3x5				15 1366			0.001 / 3		
	13	CIRCLIP TYPE C NOMINAL SIZE-7				15 3075			0.001 / 1		
	12	WASHER M10				IS 2016			0.004 / 1		
	11	WASHER 1.6xø12/ø8.5				15 513			0.001 / 1		
	10	NUT M8				15 3139			0.005 / 1		
	09	SLEEVE ø12/ø8.5-14				15 226			0.006 / 1		
	08	SCREW M8x23							0.020 / 1		
	07	KNOB-PVC COVERED							0.100 / 1		
	06	RUBBER GRIP SLEEVE							0.050 / 1		
	05	ROUND ø25-85				15 2004 GR III			0.097 / 1		
	04	PL 10x25x150				15 226			0.272 / 1		
	03	PL 20x25x55				15 226			0.216 / 1		
	02	SH 0.63x55x75							0.017 / 1		
	01	SH 3.15x120-184.5				15 513			0.446 / 1		

REV	DATE	ALTERED / CHECKED	ZONE	
03	08.02.13	R.V.R / S.R		ø16 SHOWN IN ZONE D3 REVISED TO ø11
02	29.06.93	-sd- / -sd-		IS NUMBERS YEAR DELETED
01	27.05.92	-sd- / -sd-		DESIGN CHANGED

CAUTION: The information on this document is the property of BHARAT HEAVY ELECTRICALS LTD. It must not be used directly or indirectly in any way detrimental to the interest of the company.

TYPE OF PRODUCT
OR NAME OF
CUSTOMER/PROJECT

RETRACED ON DATE.08.02.2013

BHARAT HEAVY ELECTRICALS LTD.,
UNIT: BOILER AUXILIARIES PLANT,
RANIPET - 632 406.

	NAME	SIGN	DATE	NO.OF VAR.
DRN	M.BOOPATHI	-sd-	14.06.84	
CHD	J.V.RAVIKEERTHI	-sd-		
APPD	S.M.NAIR	-sd-	28.07.84	

DEPT	GRADE OF UNTOL.DIM	SCALE	WEIGHT (KG).	REF. TO ASSY/OLD DRG.	ITEM NO.	NO. OF ITEMS
AQCS		N.T.S	1.238			
CODE	PR: QA: 500					

TITLE	CARD CODE	DRAWING NO.	REV
HAND LEVER	U 01	2-79-006-00149	03

Size A2

ALL DIMENSIONS ARE IN MILLIMETRES

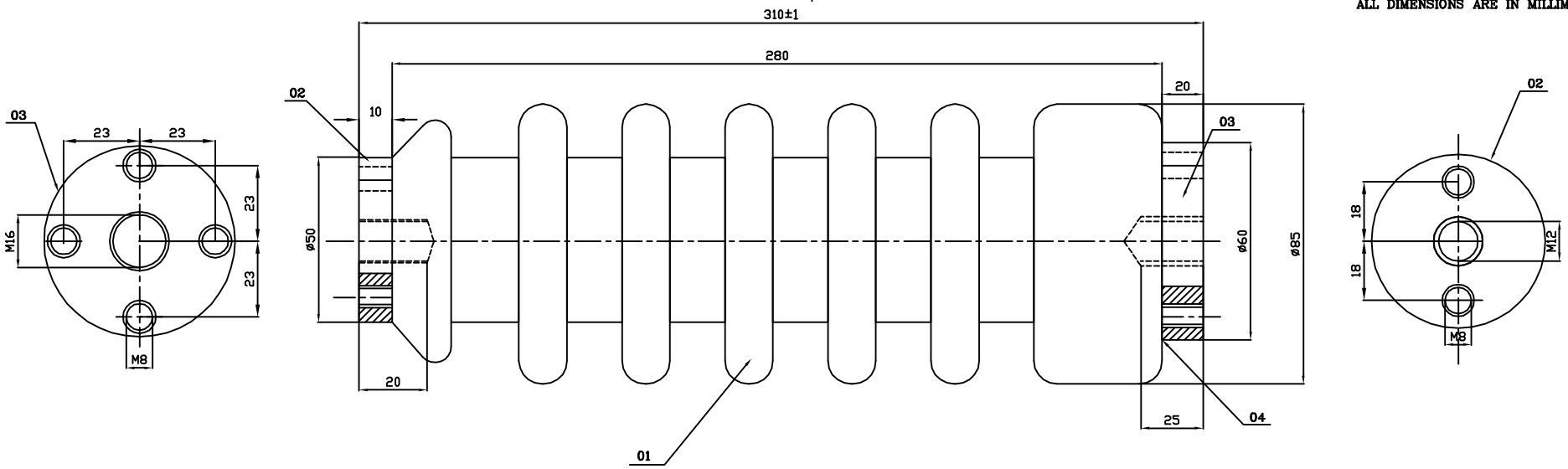

04	BINDING MATERIAL					CEMENT MORTOR			
03 01	03	PLATE–20, ø 60					IS 2062			
							IS2062			
03	02	PLATE–10, ø 50					IS 2062 03			
	01	INSULATOR					96–150–132			
							PORCELAIN			
VARIANT NO.	DESCRIPTION	IT. NO.	STD	DRAWING NO.	ITEM	MATERIAL CODE	A/C	COMP GROUP	UNIT WTG (KG)
					VAR	MATERIAL SPECN			QUANTITY

SPECIFICATIONS :

ELECTRICAL TESTING :

1. POWER FREQUENCY DRY WITHSTAND TEST 75KV(RMS) FOR 1 MINUTE. 03
2. IMPULSE FLASH OVER TEST 150KV(PEAK) (LIGHTNING IMPULSE 1.2/50 µS.) 01
3. ELECTRICAL TESTS IN ACCORDANCE WITH CLAUSE 3.3 OF IS 5621/1970.

MATERIAL :

4. INSULATION MATERIAL SHOULD BE OF PORCELAIN GLAZED.
   INSULATOR MUST BE TESTED FOR POROSITY.

NOTE :

THE METAL PARTS SHOULD BE PROVIDED WITH SUITABLE INSERTS FOR PROPER BINDING WITH INSULATOR. 01

THE METAL PART SHALL ALSO HAVE SUITABLE M16 AND M12 INSERTS FOR EXTERNAL FIXING OF INSULATOR.

REV	DATE	ALTERED	REV	DATE	ALTERED	REV	DATE	ALTERED
03	29.06.93	CHECKED	02	04.05.91	CHECKED	01	09.03.83	CHECKED
1."IS" YEAR REFERENCE DELETED. 2.KV VALUE FOR ELECTRICAL TESTS ALTERED. 3.IS 226 CHANGED TO IS 2062.			SL NO 5. OF SPECIFICATIONS DELETED			1.ITEM NO ADDED. 2.ELECTRICAL SPECIFICATIONS CORRECTED. 3.NOTE ADDED.		

CAUTION: The information on this document is the property of BHARAT HEAVY ELECTRICALS LTD. It must not be used directly or indirectly in any way detrimental to the interest of the company.

TYPE OF PRODUCT OR NAME OF CUSTOMER/PROJECT: REDRAWN

BHARAT HEAVY ELECTRICALS LTD., BOILER PLANT UNIT, TIRUCHIRAPALLI – 620 014

	NAME	SIGN	DATE	NO.OF VAR.
ALTERED	U.JEYANTHI	UJ	25.07.78	
CHECKED	RPS		25.07.78	
APPROVED	S.R		25.07.78	

DEPT AQCS	GRADE OF UNTOL.DIM		SCALE	WEIGHT (KG).	REF. TO ASSY/OLD DRG.	ITEM NO.	NO. OF ITEMS
CODE	PR:QA:500		NTS	5	0–79–006–00002		

TITLE: PIN INSULATION FOR DISCONNECTING SWITCH

CARD CODE: U 01

DRAWING NO. 3–79–006–00100

REV 03

Size A3

FIRST ANGLE PROJECTION (ALL DIMENSIONS IN MILLIMETRES)

08-249/C

REV 01	DATE	ALTERED	REV 02	DATE	ALTERED
		CHECKED			CHECKED

CAUTION THE INFORMATION ON THIS DOCUMENT IS THE PROPERTY OF BHARAT HEAVY ELECTRICALS LTD IT MUST NOT BE USED DIRECTLY OR INDIRECTLY IN ANY WAY DETRIMENTAL TO THE INTEREST OF THE COMPANY

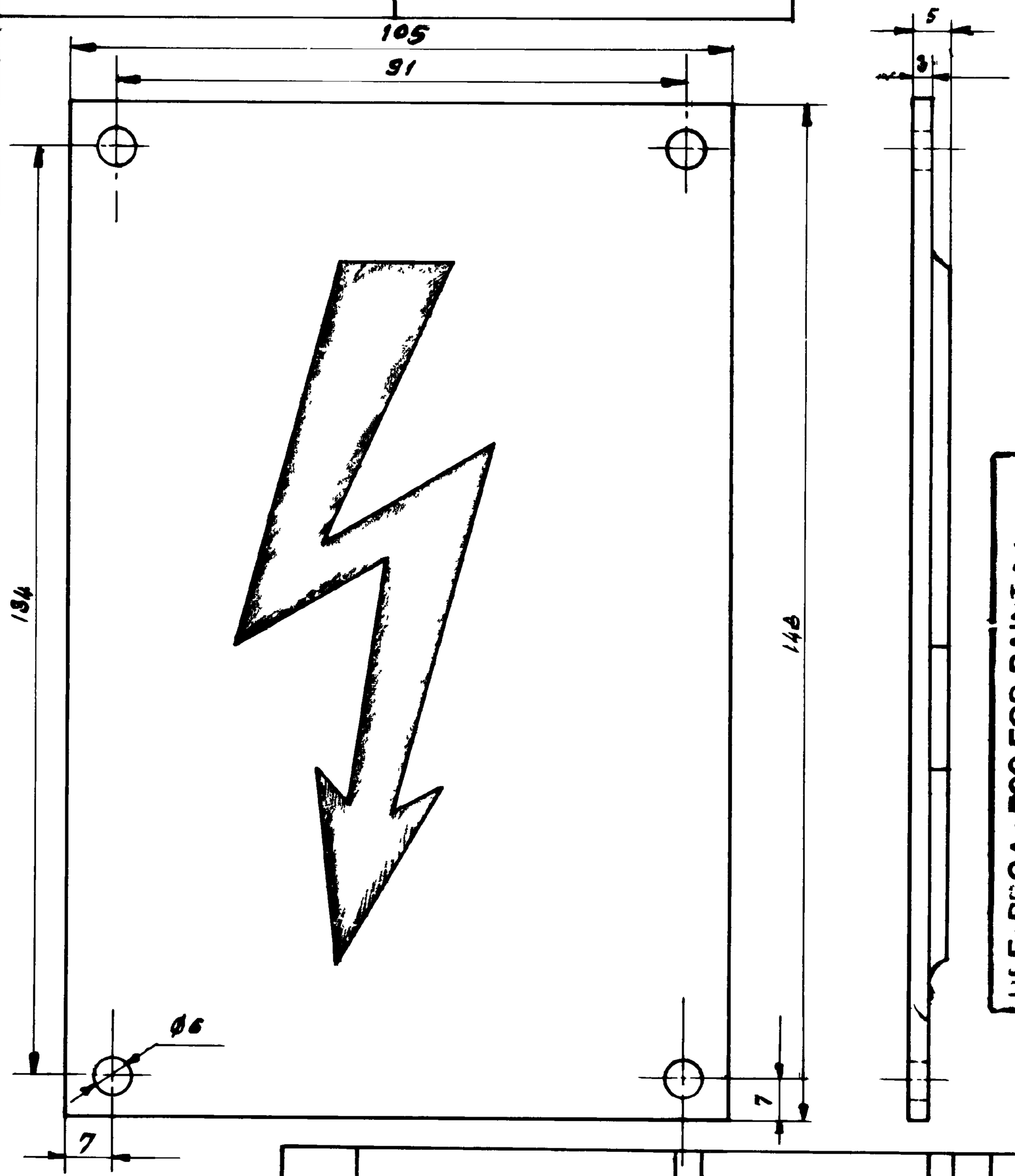

REF: PQA: 590 FOR PAINTING
REF: PQC: 500 FOR UNTOL. DIMNS

NOTE:-
CAST, RED ARROW ON WHITE BACK-GROUND

VARIANT NO.	DESCRIPTION	STD	MATL CODE	A/C	UNIT	UNIT WT
	ALUMINIUM CASTING		MATL SPEC			QTY

MICROFILMED ON 0-249 F 225

Bharat Heavy Electricals Ltd.,
BOILER PLANT UNIT
TIRUCHIRAPALLI-620 014

	NAME	SIGN	DATE
DRN	M. NATRAJ		27.10.81
CHD	SMN		06-11-81
APPD	GS		12-11-81

DEPT.	GRADE OF UNTOL DIM	SCALE	WEIGHT (kg)	REF TO ASSY / OLD DRG	ITEM NO.
ABCS	E/M/F	N.T.S	0.17		
CODE 250					

TITLE	CARD CODE	DRAWING NO	REV
WARNING SIGN	U 01	4-79-006-00267	

Size A4