बी एच ई एल

BHEL

CONTROL VALVE DN 350

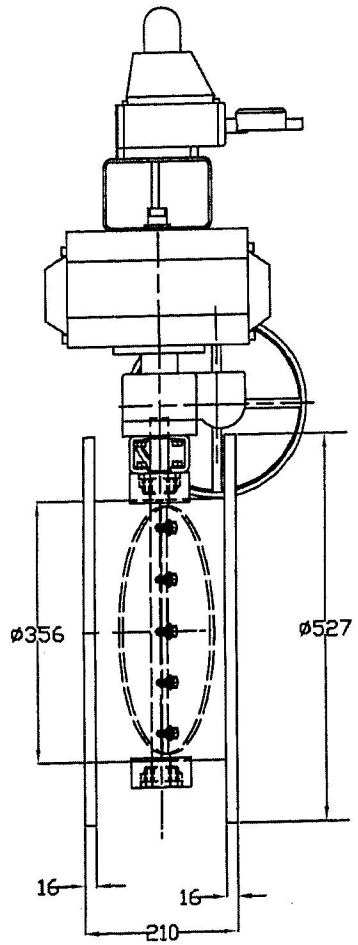

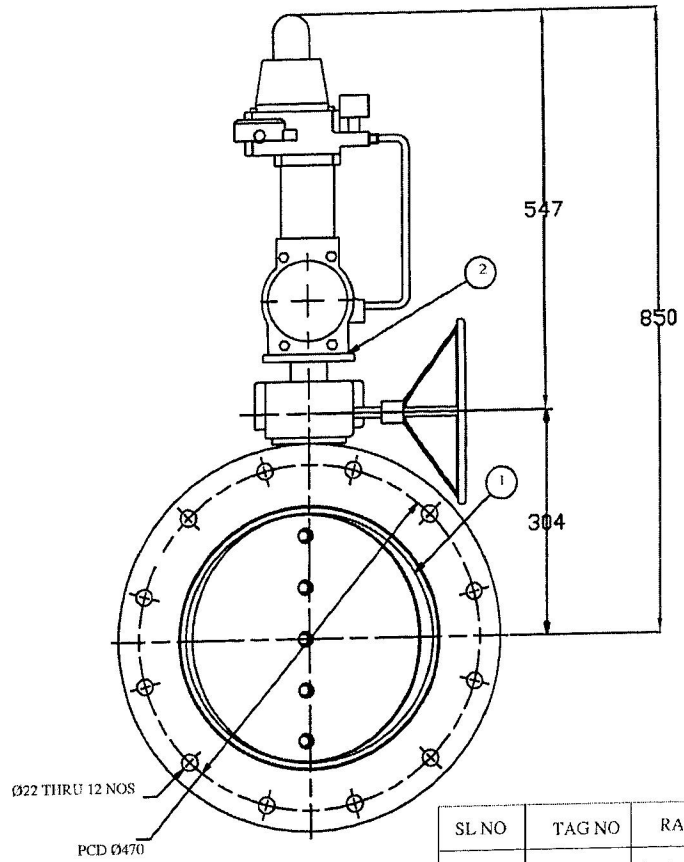

SL NO	TAG NO	RANGE	SERVICE	QTY	REMARKS
1	FCV - 0301	Ø350mm(14 inch)	ZONE - 3 PNEUMATIC CONTROL VALVE	1	

SL NO	DESCRIPTION	UNIT W
1	DN 350 AIR VALVE ASSEMBLY	1
2	PNEUMATIC ACTUATOR	1

REV	DESCRIPTION	DATE	REV BY
0	FOR INFORMATION	22.02.12	–

PRD	CS	CUSTOMER : BHEL – TRICHY	TITLE : DN 350 VALVE
CHK	MRK	END USER : BHEL – TRICHY	PROJECT : MASS FLOW CONTROL SYSTEM FOR RHF
APP	NS		

DRG.NO.: /BHEL/CV(Z3)–DRG–020

PAGE NO. 20/25

YOKOGAWA INDIA LTD