बी एच ई एल

BHEL

CONTROL VALVE DN 300

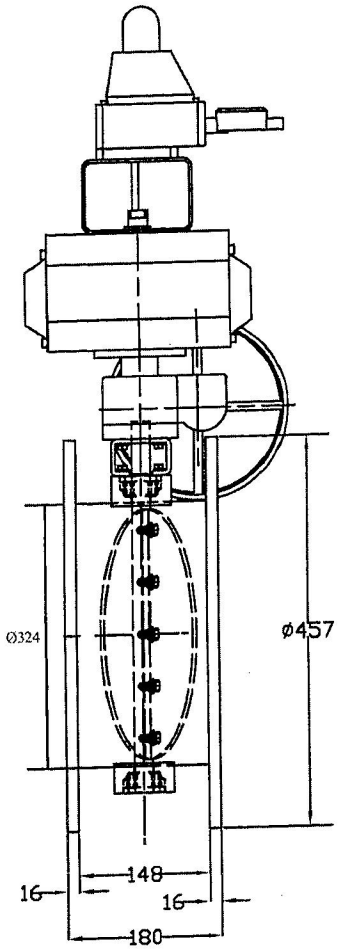

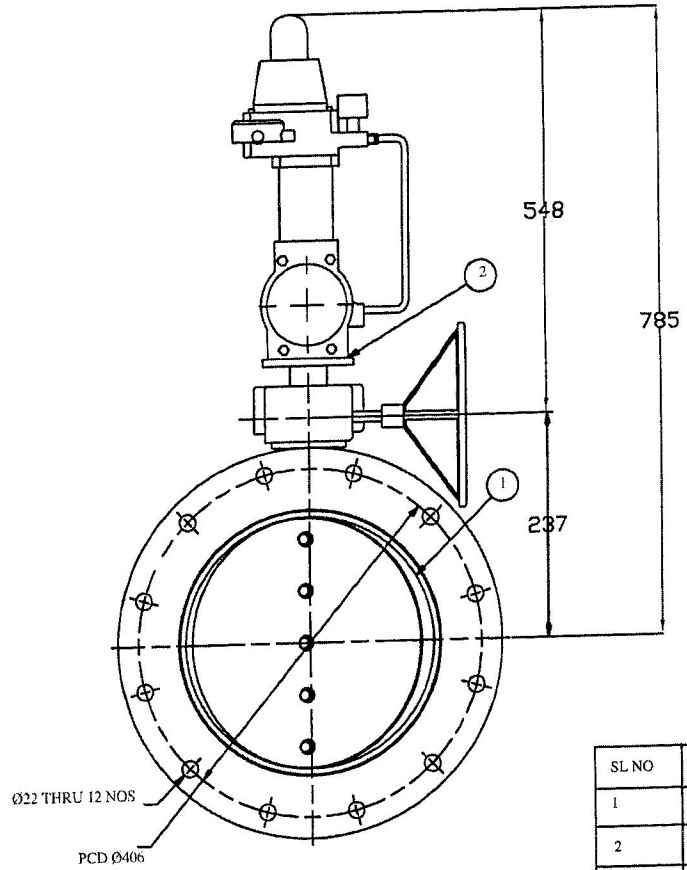

SL NO	TAG NO	RANGE	SERVICE	QTY	REMARKS
1	FCV - 0101	Ø300mm (12 inch)	ZONE - 1 PNEUMATIC AIR CONTROL VALVE	1	
2	FCV - 0401	Ø300mm (12 inch)	ZONE - 4 PNEUMATIC AIR CONTROL VALVE	1	
3	PCV - 0702	Ø300mm (12 inch)	FD FAN-B AIR CONTROL VALVE	1	

SL NO	DESCRIPTION	UNIT W
1	DN 300 AIR VALVE ASSEMBLY	1
2	PNEUMATIC ACTUATOR	1

REV	DESCRIPTION	DATE	REV BY
0	FOR INFORMATION	22.02.12	–

PRD	CS	CUSTOMER : *BHEL – TRICHY*	TITLE : DN 300 VALVE
CHK	MRK	END USER : *BHEL – TRICHY*	PROJECT : *MASS FLOW CONTROL SYSTEM FOR RHF*
APP	NS		

DRG.NO. BHEL/ CV(Z1,Z4,FD2)–DRG–018

PAGE NO. 18 / 25