FIRST ANGLE PROJECTION

ALL DIMENSIONS ARE IN mm.

DRG NO. 3 987 08 30521 REV 00

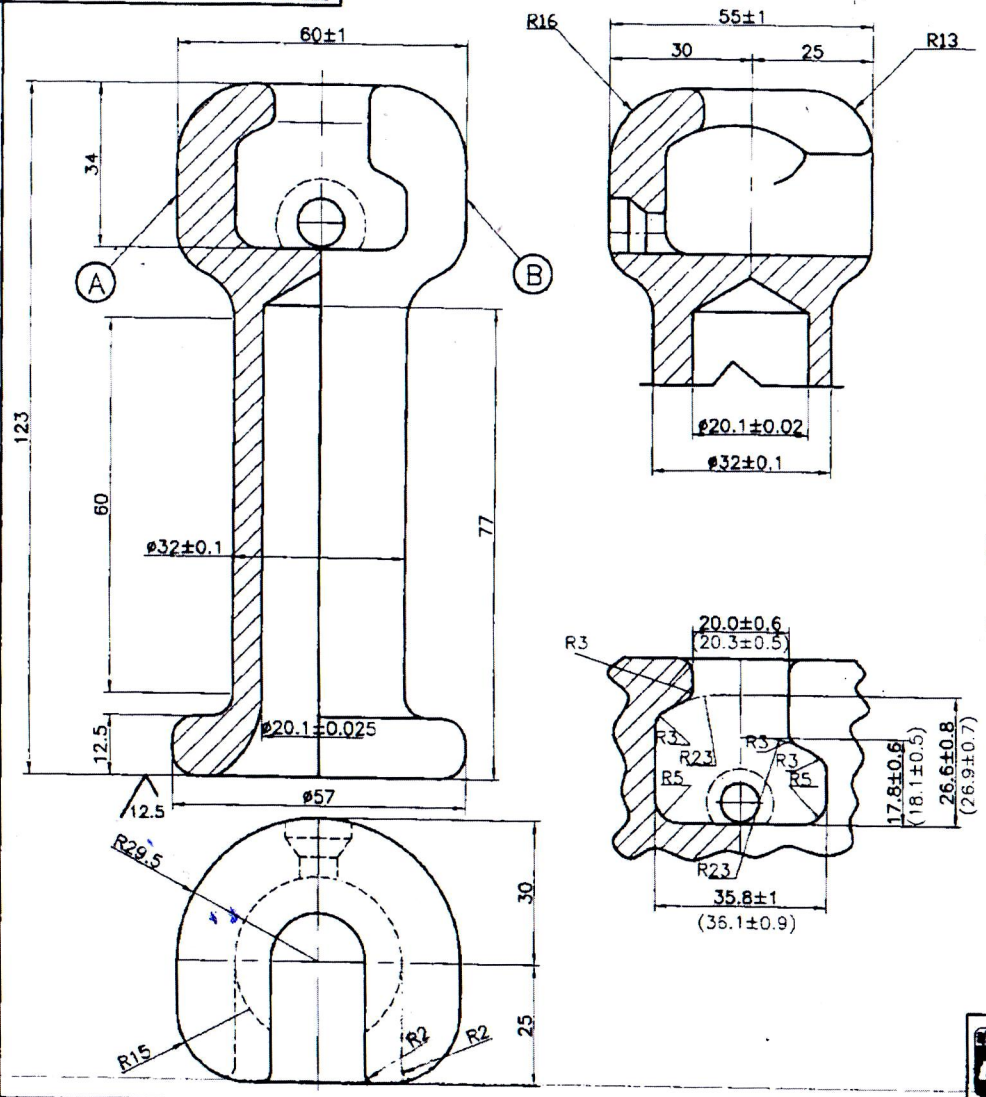

NOTES :

1 ALL DIMENSIONS ARE AFTER HOT-DIP GALVANIZING
A THICKNESS OF 0.15 mm MAY BE ASSUMED FOR GALVANIZING

2 'BHEL' AND 'YEAR MANUFACTURING' MARKINGS SHOULD BE PROVIDED IN RELIEF FORM AT THE PLACE SHOWN AS Ⓐ (6 mm LETTER HEIGHT)

3 MANUFACTURER'S IDENTIFICATION MARK,RATING OF THE FITTING SHOULD BE PROVIDED IN DEPRESSED FORM AND HEAT No. SHALL BE PROVIDED IN PROJECTED FORM(6 mm LETTER HEIGHT & 1.5 mm THICK) AT AT PLACE SHOWN AS Ⓑ

4 AFTER GALVANIZING THE SOCKET PART OF THE FITTNGS SHOULD ANSWER TO ALL THE RELEVANT 'GO & NO GO' GAUGES PRESCRIBED AND RECOMMENDED BY IEC Pub. 60120 (LATEST) DESIGNATION 16 mm. 'B'

5 FITTINGS SHOULD BE MADE OF S G IRON TO CONFORM TO GRADE 450/10 OF IS:1865-1991 OR MCI GRADE BM 320 OF IS: 14329-1996

6 DIMENSIONS INDICATED IN BRACKET REFER TO BEFORE GALVANIZING STAGE

7 BEFORE GALVANIZING THE SOCKET PART OF THE FITTINGS SHOULD ANSWER TO 'GO & 'NO GO' GAUGES TO DRG. No. 4 SK 0268, 4 SK 0269, 4 SK 0277 AND CLAUSE B12 & B13 OF IEC 60120 LATEST REVISION (16 'B' DESIGNATION)

8 SEQUENCE OF PREPARATION:
A) HEAT TREATMENT (IF REQURIED)
B) MACHINING (ON OUTER SURFACE)
C) GALVANISING
D) BORING

9 SOCKET FITTINGS SHALL WITHSTAND A MINIMUM TENSILE STRENGTH OF 113 kN

10 DIMENSIONAL TOLERANCES SHALL CONFORM TO IS:8350-1977 FOR SGI OR IS 8349-1977 FOR MCI. UNLESS OTHERWISE SPECIFIED

11 MPI TEST HAS TO BE CONDUCTED FOR ALL THE SOCKET FITTINGS

12 THE HEAT No. SHALL BE ALPHA-NUMERIC MARKING WITH 4 CHARACTERS. THE FIRST 3 DIGITS INDICATING THE DAY OF THE CALENDER YEAR & THE ALPHABETICAL LETTER INDICATING THE HEAT OF THE DAY (EXAMPLE: 150 D REPRESENTS 150TH DAY OF THE YEAR AND D REPRESENTS THE 4TH HEAT OF THE DAY)

13 DIM ø20.1±0.025 TO BE CHECKED BY 'GO' & 'NOGO' GAUGES TO DRG No. 4 SK 2330 LATEST REVISION.

CONTROLLED COPY

	NAME	SIGN	DATE
DRN	N.CHIKKANNA		01.08.12
CHD	S S P		1/8/12
APPD	S S P		1/8/12

BHARAT HEAVY ELECTRICALS LTD;
ELECTROPORCELAINS DIVISION
BANGALORE 560 012

DEPT	GRADE OF TOL DIM		SCALE	WEIGHT (kg)	REF TO CASTING DRG.	ITEM No.	No.OF ITEMS
CODE	C/M/F		N T S	1.2 (Approx)	3 987 08 30531		

TITLE: SOCKET CAP FOR 70/90kN COMPOSITE LONG ROD INSULATOR

CARD CODE

DRAWING No. 3 987 08 30521 REV. 00

No.OF SHEETS

REV	DATE	ALTERED / CHECKED	REV	DATE	ALTERED / CHECKED	REV	DATE	ALTERED / CHECKED

INVENTORY No. | SIGN AND DATE | REF. DRG. No.

SUPERSEDES DRG. No.

SHT.24 SIZE A3 420 x 297

FIRST ANGLE PROJECTION

ALL DIMENSIONS ARE IN mm.

REV 01 | ORG No. 3 987 08 30531

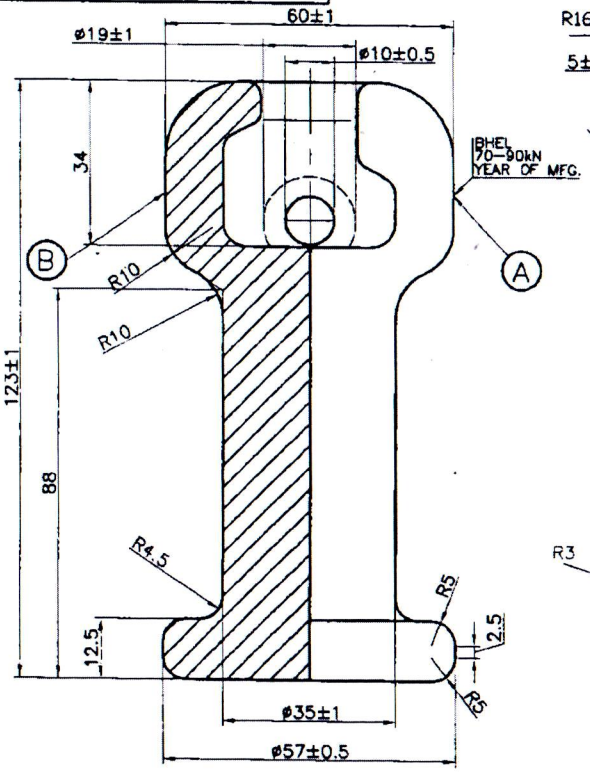

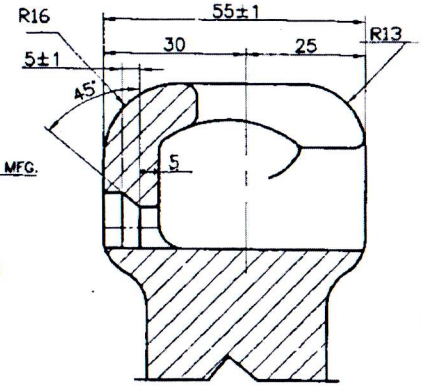

SECTION A–A

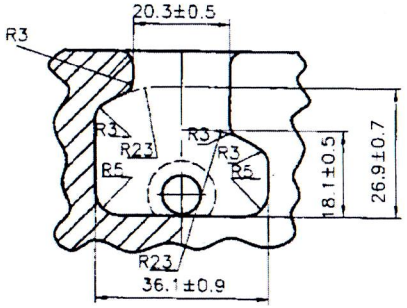

SOCKET DETAILS

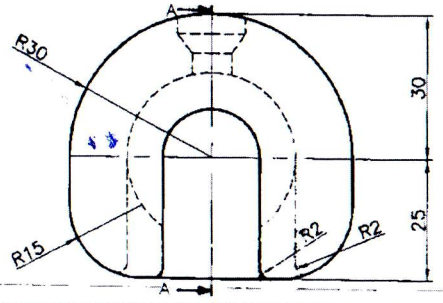

NOTES:

1. MARKING SHOULD BE PROVIDED IN DEPRESSED FORM AT THE PLACE SHOWN AS Ⓐ (6 mm LETTER HEIGHT)
2. MANUFACTURER'S IDENTIFICATION MARK,RATING OF THE FITTING SHOULD BE PROVIDED IN IN DEPRESSED FORM AND HEAT No. SHALL BE PROVIDED IN PROJECTED FORM (6mm LETTR HEIGHT&1.5 mm THICK) AT PLACE SHOWN AS Ⓑ
3. FITTINGS SHOULD BE MADE OF S G I TO CONFORM TO GRADE 450/10 OF IS:1865–1991
4. BEFORE GALVANISING THE SOCKET PART OF THE FITTINGS SHOULD ANSWER TO 'GO & NO GO' GAUGES TO DRG.No. 4 SK 0268,4 SK 0269,4 SK 0277 AND CLAUSE B12&B13 OF IEC 60120 LATEST REVISON(16 mm 'B' DESIGNATION)
5. HEAT TREATMENT (IF REQUIRED) HAS TO BE DONE
6. SOCKET FITTINGS SHALL WITHSTAND A MINIMUM TENSILE STRENGTH OF 113 kN
7. DIMENSIONAL TOLERNACES SHALL CONFORM TO IS:8350–1977 FOR SGI UNLESS OTHERWISE SPECIFIED.
8. MPI TEST HAS TO BE CONDUCTED FOR ALL THE SOCKET FITTINGS

CONTROLLED COPY

REF. DRG. No.

SIGN AND DATE

INVENTORY No.

REV	DATE	ALTERED / CHECKED	REV	DATE	ALTERED / CHECKED	REV	DATE	ALTERED / CHECKED
						01	30.04.15	ALTERED / CHECKED

1. DIMENSION AT SECTION 'A-A' 5mm IS ADDED.
2. DRAWING REVISED

REF. PH.NO: 5699

BHEL

BHARAT HEAVY ELECTRICALS LTD;
ELECTROPORCELAINS DIVISION
BANGALORE 560 012

	NAME	SIGN	DATE
DRN	N.CHIKKANNA		01.08.12
CHD	S S P		1/8/12
APPD	S S P		1/8/12

DEPT	GRADE OF TOL DIM	SCALE	WEIGHT (kg)	REF TO ASSY.DRG	ITEM No.	No.OF ITEMS
CODE	C/M/F	N T S	1.3 (Approx)			

TITLE: CASTING FOR SOCKET CAP FOR 70/90kN COMPOSITE LONG ROD INSULATOR

CARD CODE

DRAWING No. 3 987 08 30531 REV. 01

No.OF SHEETS

SUPERSEDES DRG. No.

SHT.24 SIZE A3 420 x 297

FIRST ANGLE PROJECTION

ALL DIMENSIONS ARE IN mm

REV 01 | DRG No. 3 987 06 30221

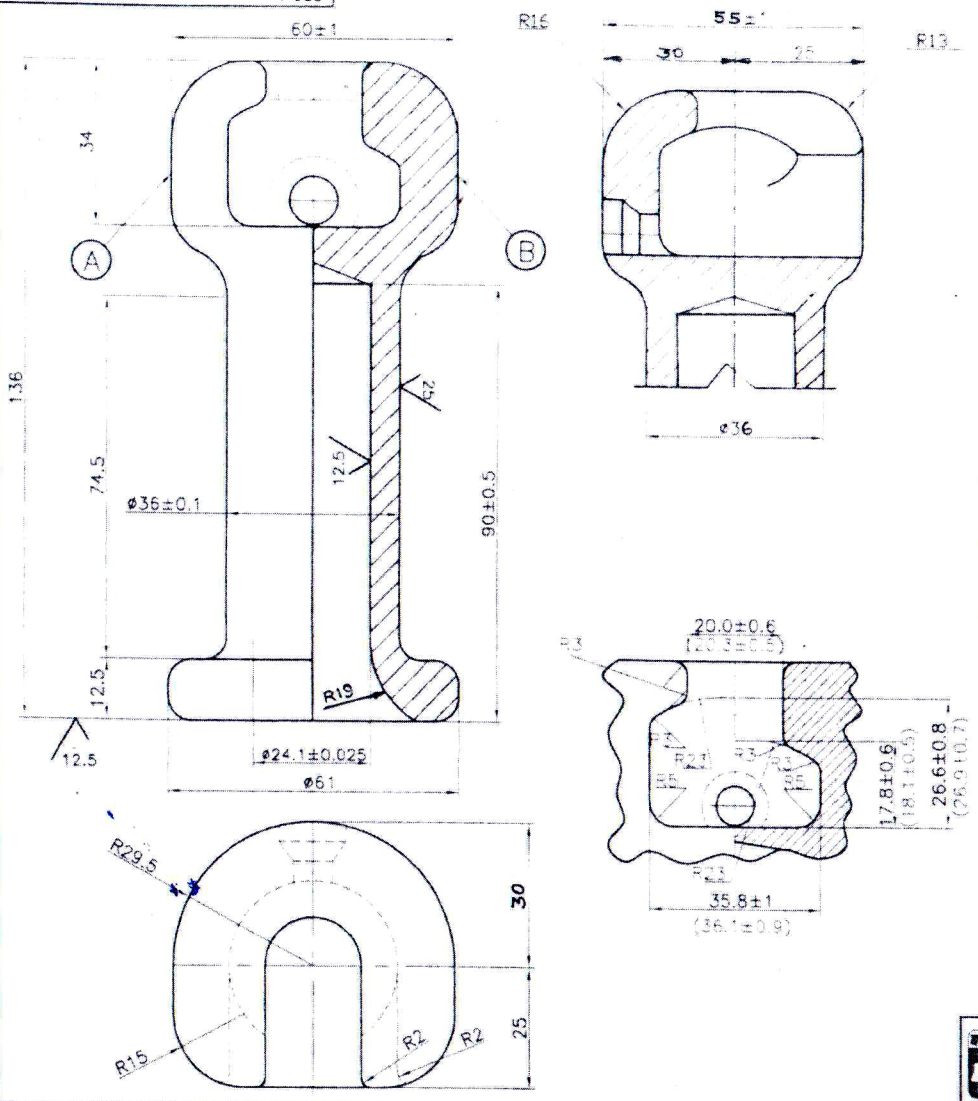

NOTES

1. ALL DIMENSIONS ARE AFTER HOT-DIP GALVANIZING A THICKNESS OF 0.15 mm MAY BE ASSUMED FOR GALVANIZING
2. MARKINGS SHOULD BE PROVIDED IN DEPRESSED FORM AT THE PLACE SHOWN AS (A) (6 mm LETTER HEIGHT)
3. MANUFACTURER'S IDENTIFICATION MARK,RATING OF THE FITTING SHOULD BE PROVIDED IN DEPRESSED FORM AND HEAT No SHALL BE PROVIDED IN PROJECTED FORM(6 mm LETTER HEIGHT & 1.5 mm THICK) AT AT PLACE SHOWN AS (B)
4. AFTER GALVANIZING THE SOCKET PART OF THE FITTNGS SHOULD ANSWER TO ALL THE RELEVANT 'GO & NO GO' GAUGES PRESCRIBED AND RECOMMENDED BY IEC Pub. 60120 (LATEST) DESIGNATION 16 mm.
5. FITTINGS SHOULD BE MADE OF S G IRON TO CONFORM TO GRADE 450/10 OF IS:1865-1991 OR MCI GRADE BM 323 OF IS: 14329-1996
6. DIMENSIONS INDICATED IN BRACKET REFER TO BEFORE GALVANIZING STAGE
7. BEFORE GALVANIZING THE SOCKET PART OF THE FITTINGS SHOULD ANSWER TO 'GO & 'NO GO' GAUGES TO DRG. No. 4 SK 0268, 4 SK 0269, 4 SK 0277 AND CLAUSE B12 & B13 OF IEC 60120 LATEST REVISION (16 mm DESIGNATION)
8. SEQUENCE OF PREPARATION.
   A) HEAT TREATMENT (IF REQURIED)
   B) MACHINING (ON OUTER SURFACE)
   C) GALVANISING
   D) BORING
9. SOCKET FITTINGS SHALL WITHSTAND A MINIMUM TENSILE STRENGTH OF 113 kN
10. DIMENSIONAL TOLERANCES SHALL CONFORM TO IS:8350-1977 FOR SGI OR IS 8349-1977 FOR MCI. UNLESS OTHERWISE SPECIFIED
11. MPI TEST HAS TO BE CONDUCTED FOR ALL THE SOCKET FITTINGS
12. THE HEAT No. SHALL BE ALPHA-NUMERIC MARKING WITH 4 CHARACTERS. THE FIRST 3 DIGITS INDICATING THE DAY OF THE CALENDER YEAR & THE ALPHABETICAL LETTER INDICATING THE HEAT OF THE DAY (EXAMPLE: 150 D REPRESENTS 150TH DAY OF THE YEAR AND D REPRESENTS THE 4TH HEAT OF THE DAY)
13. DIM ø24.1±0.025 TO BE CHECKED BY "GO & NO GO" GAUGES.
14. DIM 90±0.5 TO BE CHECKED BY "GO & NO GO" GAUGES OF DRG. No. 4 SK 2720

CONTROLLED COPY

	NAME	SIGN	DATE
DRN	N.CHIKKANNA		04/02/11
CHD	S S P		7/2/11
APPD	S S P		7/2/11

BHARAT HEAVY ELECTRICALS LTD;
ELECTROPORCELAINS DIVISION
BANGALORE 560 012

DEPT CODE	GRADE OF TOL. DIM C/M/F	SCALE	WEIGHT (kg)	REF TO ASSY.DRG	ITEM No.	No.OF ITEMS
		N T S	1.0 (Approx)			

TITLE: SOCKET CAP FOR 70/90kN COMPOSITE LONG ROD INSULATOR

CARD CODE

DRAWING No. 3 987 06 30221 REV. 01

No.OF SHEETS

REV	DATE	ALTERED / CHECKED	REV	DATE	ALTERED / CHECKED	REV	DATE	ALTERED / CHECKED
						01	04/2/11	

1. DRAWING REDRAWN & REVISED
2. DIM 90±0.5 WAS 90
3. NOTES NO. 13 & 14 ADDED
4. DIM 55 WAS 54.5 ø30 WAS 29.5 REF. PH No. 5429

SIGN AND DATE | REF. DRG. No. | INVENTORY No.

SUPERSEDES DRG. No

SHEET SIZE A3 420 x 297

FIRST ANGLE PROJECTION

ALL DIMENSIONS ARE IN mm.

DRG No. 3 987 06 30231

REV 01

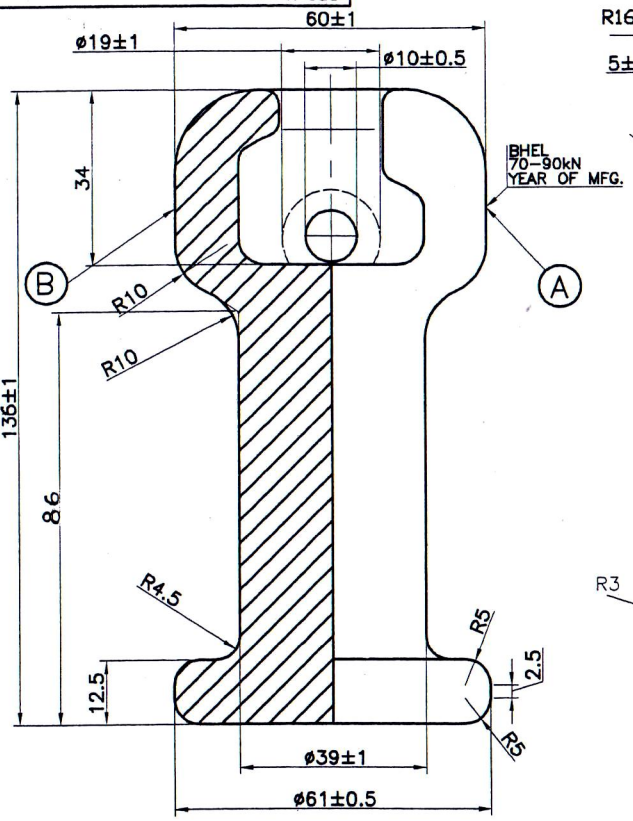

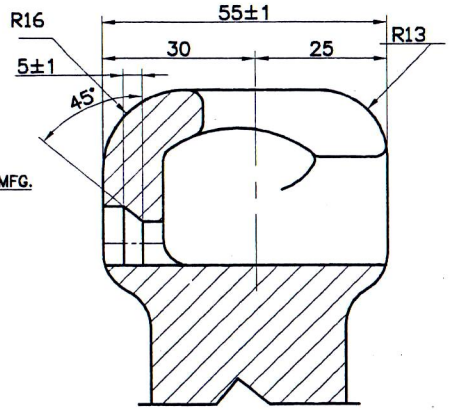

SECTION A–A

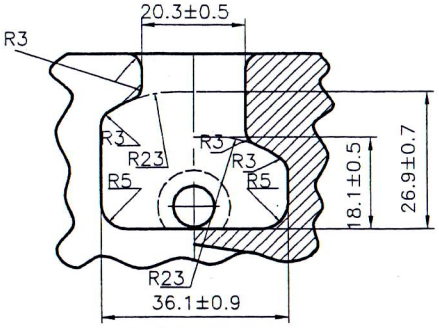

SOCKET DETAILS

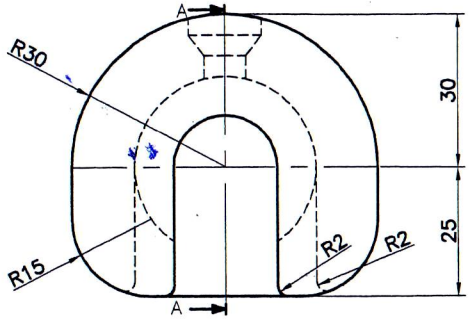

NOTES:

1. MARKING SHOULD BE PROVIDED IN DEPRESSED FORM AT THE PLACE SHOWN AS (A) (6 mm LETTER HEIGHT)
2. MANUFACTURER'S IDENTIFICATION MARK,RATING OF THE FITTING SHOULD BE PROVIDED IN DEPRESSED FORM AND HEAT No. SHALL BE PROVIDED IN PROJECTED FORM(6mm LETTR HEGIGHT&1.5 mm THICK) AT PLACE SHOWN AS (B)
3. FITTINGS SHOULD BE MADE OF S G IRON TO CONFORM TO GRADE 450/10 OF IS:1865–1991
4. BEFORE GALVANISING THE SOCKET PART OF THE FITTINGS SHOULD ANSWER TO 'GO & NO GO' GAUGES TO DRG. No. 4 SK 0268,4 SK 0269,4 SK 0277 AND CLAUSE B12&B13 OF IEC 60120 LATEST REVISON(16 mm 'B' DESIGNATION)
5. HEAT TREATMENT (IF REQUIRED) HAS TO BE DONE
6. SOCKET FITTINGS SHALL WITHSTAND A MINIMUM TENSILE STRENGTH OF 113 kN
7. DIMENSIONAL TOLERNACES SHALL CONFORM TO IS:8350–1977 FOR SGI UNLESS OTHERWISE SPECIFIED.
8. MPI TEST HAS TO BE CONDUCTED FOR ALL THE SOCKET FITTINGS
9. THE HEAT No. SHALL BE ALPHA–NUMERIC MARKING WITH 4 CHARACTERS. THE FIRST 3 DIGITS INDICATING THE DAY OF THE CALENDER YEAR & THE ALPHBETICAL LETTER INDICATING THE HEAT OF THE DAY (EXAMPLE 150 DAY THE YEARHE DAY OF THE YEAR AND D REPRESENTS THE 4 HEAT OF THE DAY)

CONTROLLED COPY

REF. DRG. No.

SIGN AND DATE

INVENTORY No.

REV	DATE	ALTERED / CHECKED	REV	DATE	ALTERED / CHECKED	REV	DATE	ALTERED / CHECKED
						01	27.12.11	

DIM. 86 WAS 100 & 136±1 WAS 135±1

REFER PH No. 5485

BHARAT HEAVY ELECTRICALS LTD;
ELECTROPORCELAINS DIVISION
BANGALORE 560 012

	NAME	SIGN	DATE
DRN	N.CHIKKANNA		23/11/10
CHD	S S P		23/11/10
APPD	S S P		23/11/10

DEPT / CODE	GRADE OF TOL DIM C/M/F	SCALE	WEIGHT (kg)	REF TO ASSY.DRG	ITEM No.	No.OF ITEMS
		N T S	1.3 (Approx)			

TITLE: CASTING FOR SOCKET CAP FOR 70/90kN COMPOSITE LONG ROD INSULATOR

CARD CODE

DRAWING No. 3 987 06 30231 REV. 01

No.OF SHEETS

SUPERSEDES DRG. No.

SHT.24 SIZE A3 420 x 297

FIRST ANGLE PROJECTION

ALL DIMENSIONS ARE IN mm.

DRG No. 3 987 13 30221 REV 02

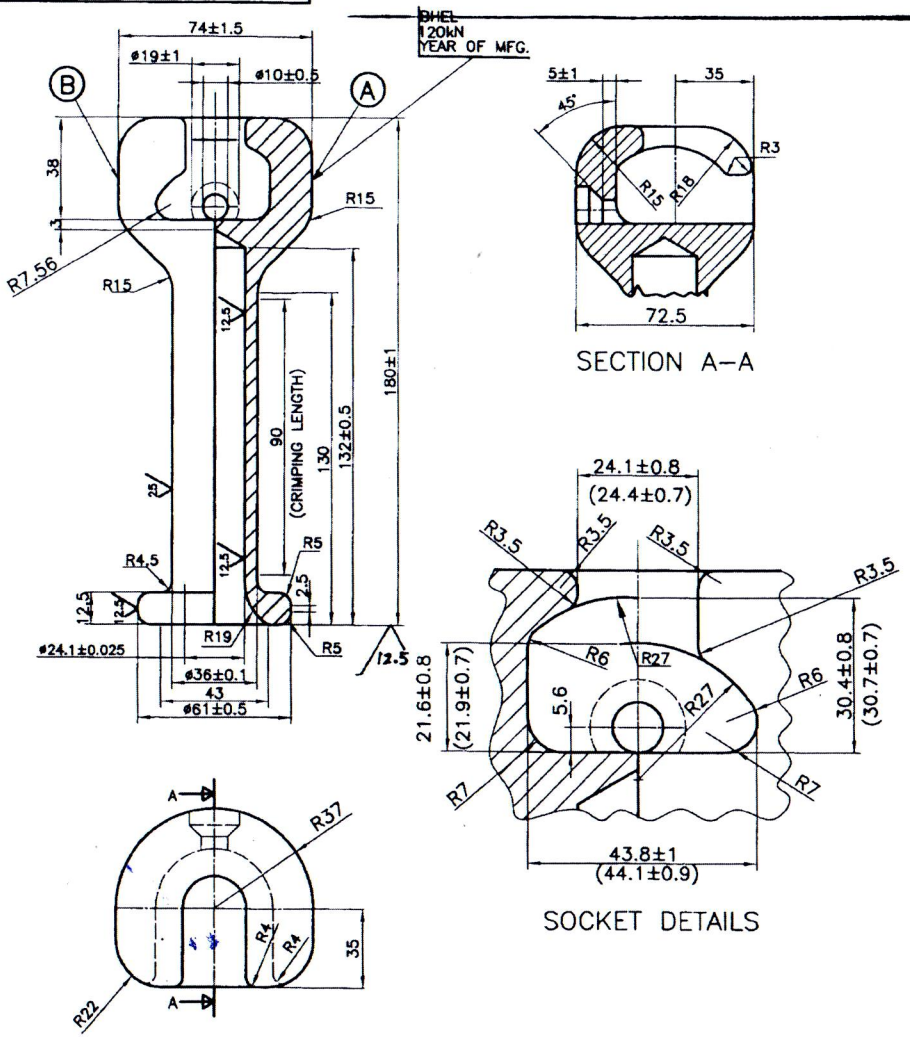

NOTES :

1 ALL DIMENSIONS ARE AFTER HOT-DIP GALVANIZING
A THICKNESS OF 0.15 mm MAY BE ASSUMED FOR GALVANIZING
2 MARKINGS SHOULD BE PROVIDED IN DEPRESSED FORM AT THE PLACE SHOWN AS (A) (6 mm LETTER HEIGHT)
3 MANUFACTURER'S IDENTIFICATION MARK,RATING OF THE FITTING SHOULD BE PROVIDED IN DEPRESSED FORM AND HEAT No. SHALL BE PROVIDED IN PROJECTED FORM(6 mm LETTER HEIGHT & 1.5 mm THICK) AT AT PLACE SHOWN AS (B)
4 AFTER GALVANIZING THE SOCKET PART OF THE FITTNGS SHOULD ANSWER TO ALL THE RELEVANT 'GO & NO GO' GAUGES PRESCRIBED AND RECOMMENDED BY IEC Pub. 60120 (LATEST) DESIGNATION 20 mm.
5 FITTINGS SHOULD BE MADE OF S G IRON TO CONFORM TO GRADE 450/10 OF IS:1865-1991 OR MCI GRADE BM 320 OF IS: 14329-1996
6 DIMENSIONS INDICATED IN BRACKET REFER TO BEFORE GALVANIZING STAGE
7 BEFORE GALVANIZING THE SOCKET PART OF THE FITTINGS SHOULD ANSWER TO 'GO & 'NO GO' GAUGES TO DRG. No. 4 SK 0268, 4 SK 0269, 4 SK 0277 AND CLAUSE B12 & B13 OF IEC 60120 LATEST REVISION (20 mm DESIGNATION)
8 SEQUENCE OF PREPARATION:
A) HEAT TREATMENT (IF REQURIED)
B) MACHINING (ON OUTER SURFACE)
C) GALVANISING
D) BORING
9 SOCKET FITTINGS SHALL WITHSTAND A MINIMUM TENSILE STRENGTH OF 150 kN
10 DIMENSIONAL TOLERANCES SHALL CONFORM TO IS:8350-1977 FOR SGI OR IS 8349-1977 FOR MCI. UNLESS OTHERWISE SPECIFIED
11 MPI TEST HAS TO BE CONDUCTED FOR ALL THE SOCKET FITTINGS
12 THE HEAT No. SHALL BE ALPHA-NUMERIC MARKING WITH 4 CHARACTERS. THE FIRST 3 DIGITS INDICATING THE DAY OF THE CALENDER YEAR & THE ALPHABETICAL LETTER INDICATING THE HEAT OF THE DAY (EXAMPLE: 150 D REPRESENTS 150TH DAY OF THE YEAR AND D REPRESENTS THE 4TH HEAT OF THE DAY)
13 THE WEIGHT OF THE ROUGH CASTING (APPROX) 2.5 kg.
14 DIM ø24.1±0.025 TO BE CHECKED BY "GO & NO GO" GAUGES.
15 DIM 132±0.5 TO BE CHECKED BY "GO & NO GO" GAUGES OF DRG. No. 4 SK 2718

CONTROLLED COPY

THE INFORMATION ON THIS DOCUMENT IS THE PROPERTY OF BHARAT HEAVY ELECTRICALS LIMITED., IT MUST NOT BE USED DIRECTLY OR INDIRECTLY IN ANY WAY DETRIMENTAL TO THE INTEREST OF THE COMPANY

SIGN AND DATE | REF. DRG. No. | INVENTORY No.

REV	DATE	ALTERED / CHECKED	REV	DATE	ALTERED / CHECKED	REV	DATE	ALTERED / CHECKED
						02	04/2/11	

1. DRAWING REDRAWN & REVISED
2. DIM 132±0.5 WAS 132
3. NOTE NO. 14 & 15 ADDED
REFER TO PH No.5429

BHARAT HEAVY ELECTRICALS LTD;
ELECTROPORCELAINS DIVISION
BANGALORE 560 012

	NAME	SIGN	DATE
DRN	N.CHIKKANNA		04/02/11
CHD	S S P		7/2/11
APPD	S S P		7/2/11

DEPT CODE	GRADE OF TOL DIM C/M/F	SCALE	WEIGHT (kg)	REF TO ASSY.DRG	ITEM No.	No.OF ITEMS
		N T S	1.6 (Approx)			

TITLE
SOCKET FITTING FOR 120kN COMPOSITE LONG ROD INSULATOR

CARD CODE

DRAWING No. 3 987 13 30221 REV. 02

No.OF SHEETS

SUPERSEDES DRG. No.

SHT.24 SIZE A3 420 x 297

FIRST ANGLE PROJECTION

ALL DIMENSIONS ARE IN mm

REV	DRG No.
00	3 987 13 30231

BHEL
120kN
YEAR OF MFG.

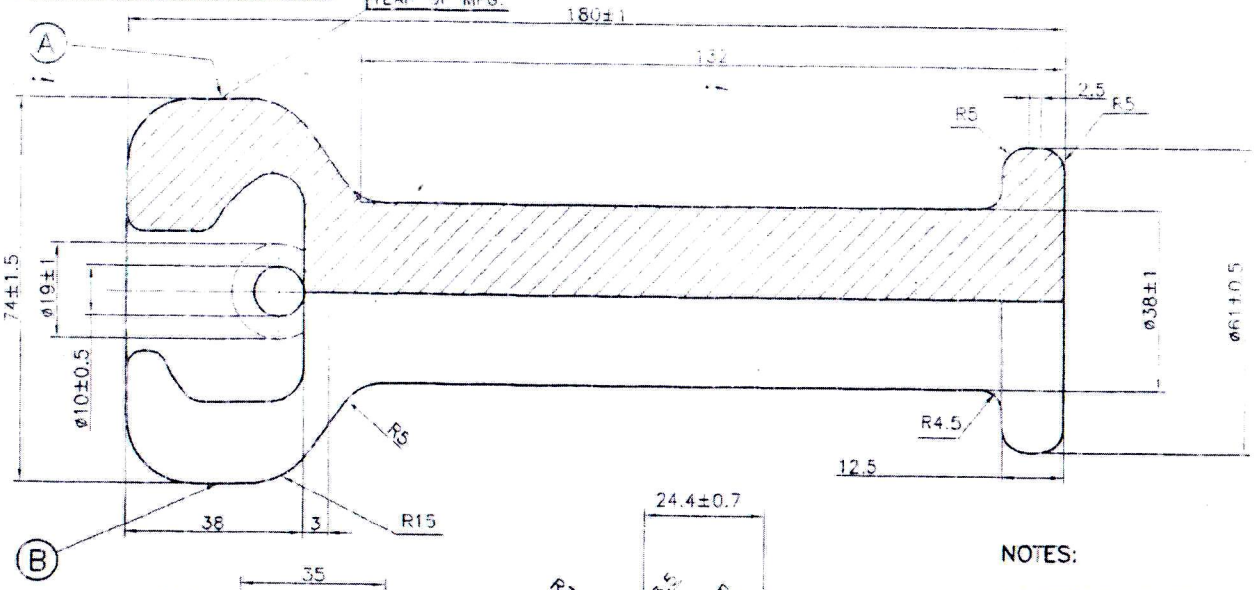

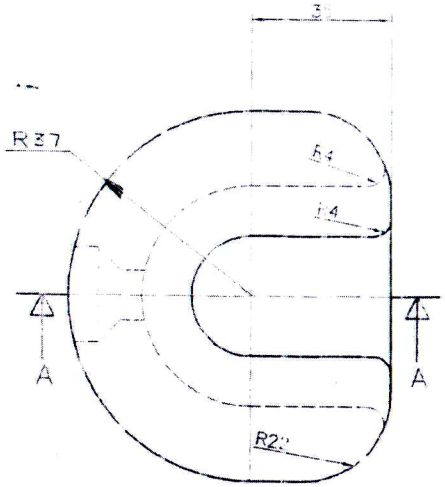

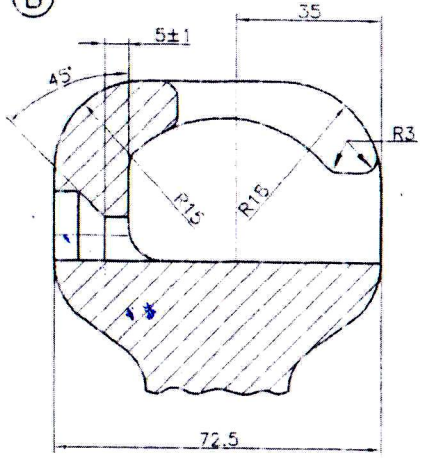

SECTION A–A

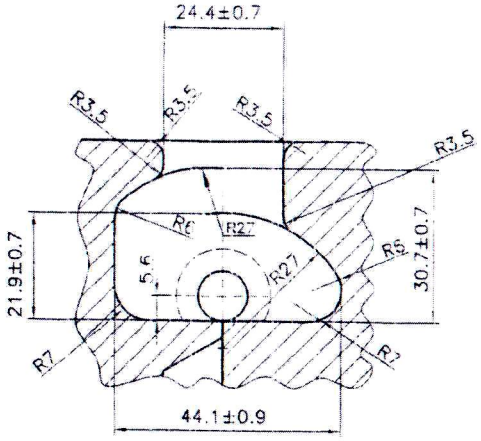

SOCKET DETAILS

NOTES:

1. MARKING SHOULD BE PROVIDED IN DEPRESSED FORM AT THE PLACE SHOWN AS (A) (6 mm LETTER HEIGHT)
2. MANUFACTURER'S IDENTIFICATION MARK,RATING OF THE FITTING SHOULD BE PROVIDED IN DEPRESSED FORM AND HEAT No. SHALL BE PROVIDED IN PROJECTED FORM(6mm LETTR HEGIGHT&1.5 mm THICK) AT PLACE SHOWN AS (B)
3. FITTINGS SHOULD BE MADE OF S G IRON TO CONFORM TO GRADE 450/10 OF IS:1865-1991 OR MCI GRADE BM 320 OF IS: 14329-1996
4. BEFORE GALVANISING THE SOCKET PART OF THE FITTINGS SHOULD ANSWER TO 'GO & NO GO' GAUGES TO DRG. No. 4 SK 0268,4 SK 0269,4 SK 0277 AND CLAUSE B12&B13 OF IEC 60120 LATEST REVISON(20 mm DESIGNATION)
5. SEQUENCE OF PRPARATION:
   A) HEAT TREATMENT (IF REQUIRED) HAS TO BE DONE
6. SOCKET FITTINGS SHALL WITHSTAND A MINIMUM TENSILE STRENGTH OF 150 kN
7. DIMENSIONAL TOLERNACES SHALL CONFORM TO IS:8350-1977 FOR SGI OR IS:8349-1977 FOR MC UNLESS OTHERWISE SPECIFIED.
8. MPI TEST HAS TO BE CONDUCTED FOR ALL THE SOCKET FITTINGS
9. THE HEAT No. SHALL BE ALPHA-NUMERIC MARKING WITH 4 CHARACTERS. THE FIRST 3 DIGITS INDICATING THE DAY OF THE CALENDER YEAR & THE ALPHBETICAL LETTER INDICATING THE HEAT OF THE DAY (EXAMPLE 150 DAY THE YEARHE DAY OF THE YEAR AND D REPRESENTS THE 4 HEAT OF THE DAY)

CONTROLLED COPY

FERROUS PARTS ARE HOT-DIP GALVANIZED (EXCEPT FEMALE THREADS) AS PER IS:2629 AND TESTS CONFORM TO IS:2633

BHARAT HEAVY ELECTRICALS LTD.
ELECTROPORCELAINS DIVISION
BANGALORE 560 012

	NAME	SIGN	DATE
DRN	N.CHIKKANNA		23.08.07
CHD	–		
APPD	A K S		23.08.07

DEPT CODE	GRADE OF TOL DIM C/N/F		SCALE	WEIGHT (kg)	REF TO ASSY.DRG	ITEM No.	No. OF ITEMS
			N T S	2.6 (Approx)			

TITLE: CASTING FOR SOCKET CAP FOR 120kN COMPOSITE LONG ROD INSULATOR

CAD CODE

DRAWING No. 3 987 13 30231 — REV. 00

No. OF SHEETS

REV	DATE	ALTERED / CHECKED	REV	DATE	ALTERED / CHECKED	REV	DATE	ALTERED / CHECKED

INVENTORY No.

SIGN AND DATE

REF. DRG. No.

THE INFORMATION ON THIS DOCUMENT IS THE PROPERTY OF BHARAT HEAVY ELECTRICALS LIMITED, IT MUST NOT BE USED DIRECTLY OR INDIRECTLY IN ANY WAY DETRIMENTAL TO THE INTEREST OF THE COMPANY

SUPERSEDES DRG. No.

SHT.24 SIZE A3 420 X 297

FIRST ANGLE PROJECTION

ALL DIMENSIONS ARE IN mm.

DRG No. 3 987 09 15321 REV 02

THE INFORMATION ON THIS DOCUMENT IS THE PROPERTY OF BHARAT HEAVY ELECTRICALS LIMITED., IT MUST NOT BE USED DIRECTLY OR INDIRECTLY IN ANY WAY DETRIMENTAL TO THE INTEREST OF THE COMPANY

REF. DRG. No.

SIGN AND DATE

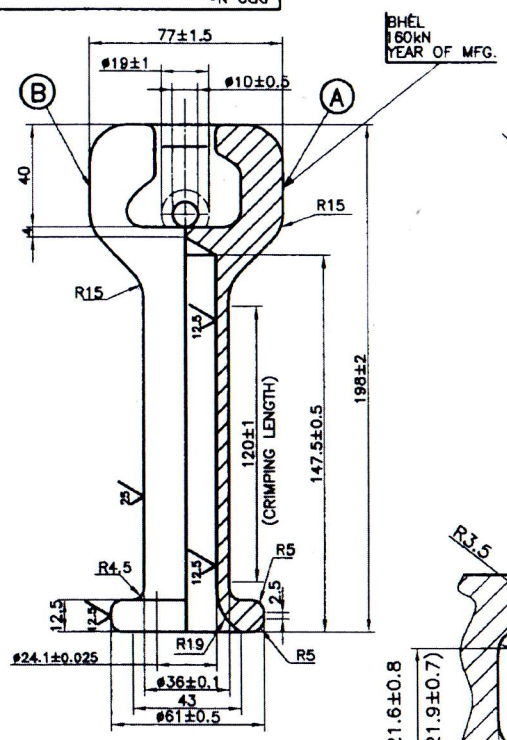

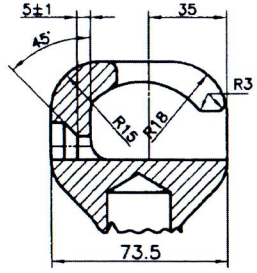

SECTION A–A

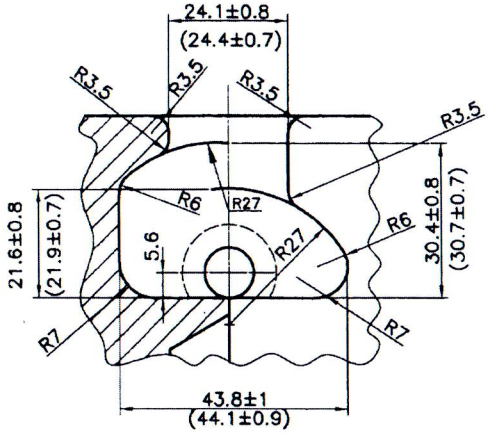

SOCKET DETAILS

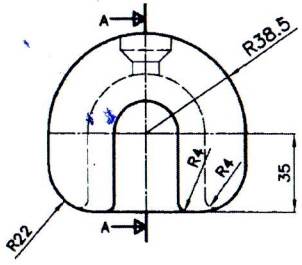

NOTES :

1. ALL DIMENSIONS ARE AFTER HOT–DIP GALVANIZING
   A THICKNESS OF 0.15 mm MAY BE ASSUMED FOR GALVANIZING
2. MARKINGS SHOULD BE PROVIDED IN DEPRESSED FORM
   AT THE PLACE SHOWN AS Ⓐ (6 mm LETTER HEIGHT)
3. MANUFACTURER'S IDENTIFICATION MARK,RATING OF THE FITTING SHOULD BE PROVIDED IN DEPRESSED FORM AND HEAT No. SHALL BE PROVIDED IN PROJECTED FORM(6 mm LETTER HEIGHT & 1.5 mm THICK) AT AT PLACE SHOWN AS Ⓑ
4. AFTER GALVANIZING THE SOCKET PART OF THE FITTNGS SHOULD ANSWER TO ALL THE RELEVANT 'GO & NO GO' GAUGES PRESCRIBED AND RECOMMENDED BY IEC Pub. 60120 (LATEST) DESIGNATION 20 mm.
5. FITTINGS SHOULD BE MADE OF S G IRON TO CONFORM TO GRADE 450/10 OF IS:1865–1991 OR MCI GRADE BM 320 OF IS:14329–1996
6. DIMENSIONS INDICATED IN BRACKET REFER TO BEFORE GALVANIZING STAGE
7. BEFORE GALVANIZING THE SOCKET PART OF THE FITTINGS SHOULD ANSWER TO 'GO & 'NO GO' GAUGES TO DRG. No. 4 SK 0268, 4 SK 0269, 4 SK 0277 AND CLAUSE B12 & B13 OF IEC 60120 LATEST REVISION (20 mm DESIGNATION)
8. SEQUENCE OF PREPARATION:
   A) HEAT TREATMENT (IF REQURIED)
   B) MACHINING (ON OUTER SURFACE)
   C) GALVANISING
   D) BORING
9. SOCKET FITTINGS SHALL WITHSTAND A MINIMUM TENSILE STRENGTH OF 200 kN
10. DIMENSIONAL TOLERANCES SHALL CONFORM TO IS:8350–1977 FOR SGI OR IS 8349–1977 FOR MCI. UNLESS OTHERWISE SPECIFIED
11. MPI TEST HAS TO BE CONDUCTED FOR ALL THE SOCKET FITTINGS
12. THE HEAT No. SHALL BE ALPHA–NUMERIC MARKING WITH 4 CHARACTERS. THE FIRST 3 DIGITS INDICATING THE DAY OF THE CALENDER YEAR & THE ALPHABETICAL LETTER INDICATING THE HEAT OF THE DAY (EXAMPLE: 150 D REPRESENTS 150TH DAY OF THE YEAR AND D REPRESENTS THE 4TH HEAT OF THE DAY)
13. THE WEIGHT OF THE ROUGH CASTING (APPROX) 2.4 kg.
14. DIM ø24.1±0.025 TO BE CHECKED BY "GO & NO GO" GAUGES.
15. DIM 147.5±0.5 TO BE CHECKED BY "GO & NO GO" GAUGES OF DRG. No. 4 SK 2724

CONTROLLED COPY

BHARAT HEAVY ELECTRICALS LTD;
ELECTROPORCELAINS DIVISION
BANGALORE 560 012

	NAME	SIGN	DATE
DRN	N.CHIKKANNA		04/02/11
CHD	S S P		4/2/11
APPD	S S P		4/2/11

DEPT CODE	GRADE OF TOL DIM C/M/F		SCALE	WEIGHT (kg)	REF TO ASSY.DRG	ITEM No.	No.OF ITEMS
			N T S	1.8 (Approx)	3 987 09 15331		

TITLE: SOCKET FITTING FOR 160kN COMPOSITE LONG ROD INSULATOR

CARD CODE

DRAWING No. 3 987 09 15321 REV. 02

No.OF SHEETS

REV	DATE	ALTERED / CHECKED	REV	DATE	ALTERED / CHECKED	REV	DATE	ALTERED / CHECKED
						02	04/2/11	

1. DRAWING REDRAWN & REVISED
2. DIM 147.5±0.5 WAS 147
3. NOTE NO. 15 ADDED

REFER TO PH No.5429

INVENTORY No.

SHT.24 SIZE A3 420 X 297

FIRST ANGLE PROJECTION

ALL DIMENSIONS ARE IN mm.

DRG No. 3 987 09 15331

REV 00

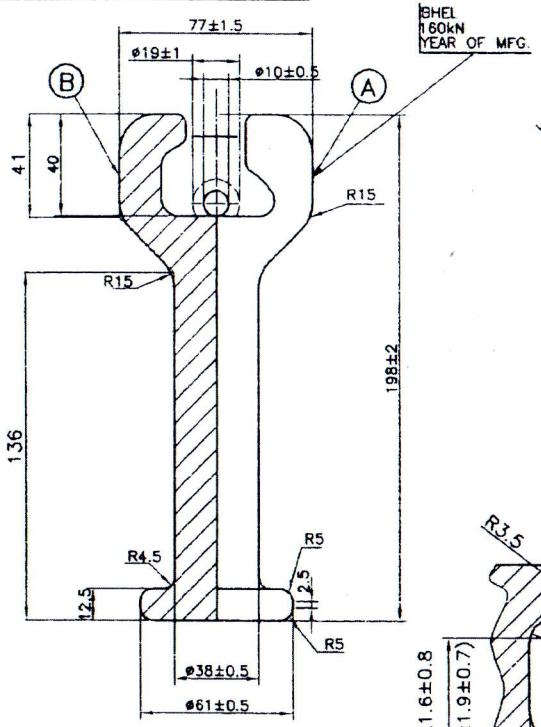

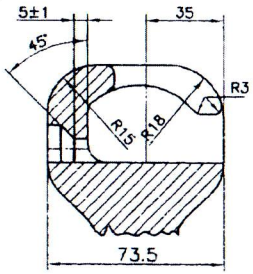

SECTION A–A

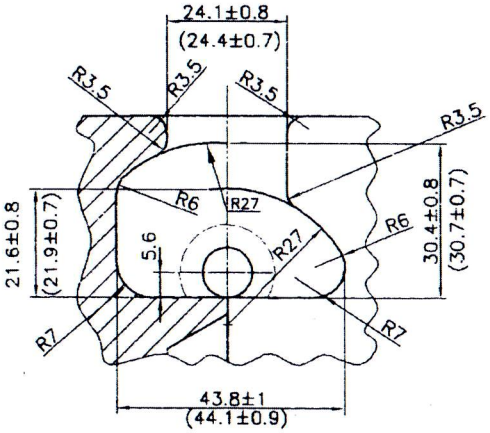

SOCKET DETAILS

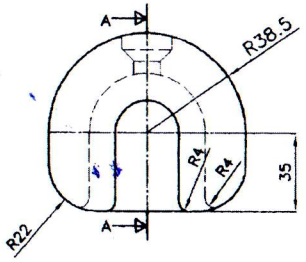

NOTES:

1. MARKING SHOULD BE PROVIDED IN DEPRESSED FORM AT THE PLACE SHOWN AS (A) (6 mm LETTER HEIGHT)
2. MANUFACTURER'S IDENTIFICATION MARK,RATING OF THE FITTING SHOULD BE PROVIDED IN DEPRESSED FORM AND HEAT No. SHALL BE PROVIDED IN PROJECTED FORM(6mm LETTER HEIGHT &1.5mm THICK) AT PLACE SHOWN AS (B)
3. FITTINGS SHOULD BE MADE OF S G IRON TO CONFORM TO GRADE 450/1C OF IS:1865–1991 OR MCI GRADE BM 320 OF IS: 14329–1996
4. BEFORE GALVANISING THE SOCKET PART OF THE FITTINGS SHOULD ANSWER TO 'GO & NO GO' GAUGES TO DRG. No. 4 SK 0268,4 SK 0269,4 SK 0277 AND CLAUSE B12&B13 OF IEC 60120 LATEST REVISON(20 mm DESIGNATION)
5. SEQUENCE OF OPERATIONS :

A) HEAT TREATMENT (IF REQUIRED) HAS TO BE DONE

6. SOCKET FITTINGS SHALL WITHSTAND A MINIMUM TENSILE STRENGTH OF 200 kN
7. DIMENSIONAL TOLERNACES SHALL CONFORM TO IS:8350–1977 FOR SGI OR IS:8349–1977 FOR MCI UNLESS OTHERWISE SPECIFIED.
8. MPI TEST HAS TO BE CONDUCTED FOR ALL THE SOCKET FITTINGS
9. THE HEAT No. SHALL BE ALPHA–NUMERIC MARKING WITH 4 CHARACTERS. THE FIRST 3 DIGITS INDICATING THE DAY OF THE CALENDER YEAR & THE ALPHBETICAL LETTER INDICATING THE HEAT OF THE DAY (EXAMPLE 150 DAY THE YEARHE DAY OF THE YEAR AND D REPRESENTS THE 4 HEAT OF THE DAY)

CONTROLLED COPY

THE INFORMATION ON THIS DOCUMENT IS THE PROPERTY OF BHARAT HEAVY ELECTRICALS LIMITED, IT MUST NOT BE USED DIRECTLY OR INDIRECTLY IN ANY WAY DETRIMENTAL TO THE INTEREST OF THE COMPANY

REF. DRG. No.

SIGN AND DATE

INVENTORY No.

REV	DATE	ALTERED / CHECKED	REV	DATE	ALTERED / CHECKED	REV	DATE	ALTERED / CHECKED

BHARAT HEAVY ELECTRICALS LTD;
ELECTROPORCELAINS DIVISION
BANGALORE 560 012

	NAME	SIGN	DATE
DRN	N.CHIKKANNA		13.09.07
CHD			
APPD	AKS		13.09.07

DEPT CODE	GRADE OF TOL DIM C/M/F	SCALE	WEIGHT (kg)	REF TO ASSY.DRG	ITEM No.	No.OF ITEMS
		N T S	2.5 (Approx)			

TITLE: CASTING FOR SOCKET FITTING FOR 160kN COMPOSITE LONG ROD INSULATOR

CARD CODE

DRAWING No. 3 987 09 15331

REV. 00

No.OF SHEETS

SUPERSEDES DRG. No.

SHT.24 SIZE A3 420 x 297