Bharat Heavy Electricals Ltd.,

(A Government of India undertaking)

Electronics Division

PB No.2606, Mysore Road, Bangalore-560026, India

Quotations are invited under two part bid system for Supply of MMS, Columns and Super structures for 10MW WBSEDCL Solar PV Plant as per BHEL technical specifications through e-procurement route.

RFQ NO and date	SPKSCPV001 dated 19.07.2017 (E-tender)
RFQ due date & time	02.08.2017 up to 13.00 hrs (IST)
Date, Time & Venue of Part-I Bid Opening	02.08.2017 after 13.30 hrs (IST) (E-tender) – Website - https://bheleps.buyjunction.in
Date, Time & Venue of Price Bid opening	Will be intimated later for technically accepted vendors
Address for Communication & Contact Person in BHEL	Mr. S.Pankaj Kumar (08126333426)/ Mr. Chendhil Kumar R (09449869644), SC&PV MM Department, BHEL Elecrtronics Division, PB NO 2606, Mysore road, Bangalore-560 026. INDIA Email: spankaj@bheledn.co.in, chendhil@bheledn.co.in Telephone number: +91 80 26989667, +91 80 26998391
Name and address of the Independent External Monitor for this tender	NA

REQUEST FOR QUOTATION

MMI:PU:RF:003

BHARAT HEAVY ELECTRICALS LIMITED
Electronics Division
PB No. 2606, Mysore Road Bangalore - 560026
INDIA

RFQ NUMBER: SPKSCPV001

RFQ DATE : 18.07.2017

Due Date : 02.08.2017
Time : 13:00 HRS

VENUE : NEW ENGG. BLDG

(address for communication) :

(for all correspondence)
Purchase Executive : S. Pankaj Kumar
Phone : 080-26989667
Fax :
E-mail: spankaj@bheledn.co.in

Please submit your lowest quotation subject to our terms and conditions attached for the materials mentioned below.

Sl No.	Description	Qty	Unit	Delivery qty	Delivery Date
1	PS0679073183 Item-1 MMS Column * HSN/SAC : 7308 Test Certificate PS-439-1142 PS-439-1142	6,900	NO	6,900	01.09.2017
2	PS0679073191 Item-2 MMS Rafter * HSN/SAC : 7308 Test Certificate	6,900	NO	6,900	01.09.2017
3	PS0679073205 Item-3 Purlin1 * HSN/SAC : 7308 Test Certificate	6,640	NO	6,640	01.09.2017
4	PS0679073213 Item-4 Purlin2 * HSN/SAC : 7308 Test Certificate	6,640	NO	6,640	01.09.2017
5	PS0679073221 Item-5 Purlin3 * HSN/SAC : 7308 Test Certificate	6,640	NO	6,640	01.09.2017
6	PS0679073230 Item-7 Sag Angle * HSN/SAC : 7308 Test Certificate	10,480	NO	10,480	01.09.2017
7	PS0679073248 Item-8 Bracing1A * HSN/SAC : 7308 Test Certificate	6,900	NO	6,900	01.09.2017
8	PS0679073256 Item-9 Bracing * HSN/SAC : 7308	6,900	NO	6,900	01.09.2017

TWO PART BID - SUBMIT TECHNICAL AND PRICE BID IN SEPARATE SEALED COVERS

i). This is only RFQ not an order.
ii). In all correspondence quote RFQ No. & due date.
iii). In Quotation BHEL material code / RFQ Sl. No. should be mentioned clearly.
iv). Quotation Envelope / Fax not superscribed with RFQ No.and due date is liable for rejection.
v). Quotation should remain valid for a minimum peiod of 90 days from due date.
vi). In case of non-receipt of Quotation or regret letter for 3 consecutive RFQs you are liable to be removed from our vendors list.

* The HSN/SAC no mentioned against the line items in the RFQ are indicative only.

For and On behalf of BHEL.

S. Pankaj Kumar
Semiconductors & Pho

REQUEST FOR QUOTATION

MMI:PU:RF:003

BHARAT HEAVY ELECTRICALS LIMITED
Electronics Division
PB No. 2606, Mysore Road Bangalore - 560026
INDIA

RFQ NUMBER: SPKSCPV001

RFQ DATE : 18.07.2017

Due Date : 02.08.2017
Time : 13:00 HRS

VENUE : NEW ENGG. BLDG

(address for communication) :

(for all correspondence)
Purchase Executive : S. Pankaj Kumar
Phone : 080-26989667
Fax :
E-mail: spankaj@bheledn.co.in

Please submit your lowest quotation subject to our terms and conditions attached for the materials mentioned below.

Sl No.	Description	Qty	Unit	Delivery qty	Delivery Date
	Test Certificate				
9	PS0679073264 Item-10 Purlin Splice * HSN/SAC : 7308 Test Certificate	13,280	NO	13,280	01.09.2017
10	PS0679073272 Item-11 Column Plate * HSN/SAC : 7308 Test Certificate	6,900	NO	6,900	01.09.2017
11	PS0679073280 Item-6 Purlin4 * HSN/SAC : 7308 Test Certificate	520	NO	520	01.09.2017

Total Number of Items - 11

1.
2.

TWO PART BID - SUBMIT TECHNICAL AND PRICE BID IN SEPARATE SEALED COVERS

i). This is only RFQ not an order.
ii). In all correspondence quote RFQ No. & due date.
iii). In Quotation BHEL material code / RFQ Sl. No. should be mentioned clearly.
iv). Quotation Envelope / Fax not superscribed with RFQ No.and due date is liable for rejection.
v). Quotation should remain valid for a minimum peiod of 90 days from due date.
vi). In case of non-receipt of Quotation or regret letter for 3 consecutive RFQs you are liable to be removed from our vendors list.

* The HSN/SAC no mentioned against the line items in the RFQ are indicative only.

For and On behalf of BHEL.

S. Pankaj Kumar
Semiconductors & Pho

COPYRIGHT AND CONFIDENTIAL

The information on this document is the property of Bharat Heavy Electricals Limited.

It must not be used directly or indirectly in anyway detrimental to the interest to the company

Technical Specification for Supply of Module Mounting structures for 10MW AC Solar PV power plant at WBSEDCL-Santaldih.

Revision details :R 00	Prepared	Approved	Date
	NY	PM	15.07.2017

Acronym Used:

1. MTC = Mill test Certificate.
2. MQP= Material quality plan.
3. OEM=Original Equipment manufacturer.
4. MMS = Module Mounting Structures.
5. PSI= Pre shipment inspection.

1.0 Introduction

Bharat Heavy Electricals Limited (BHEL), Electronics Division, Bangalore is setting up 10MW Grid-connected SPV Power Plant for WBSEDCL at Santaldih. This document describes the technical specification for the Module Mounting Structures (MMS) that constitute the solar array of the plant. MMS are steel structures over which solar PV modules are mounted. The total approx. Steel supply for this tender is approx. 440 MT without galvanization weight.

2.0 Pre-Qualification Criteria

2.1 Bidder shall have in-house cold roll forming facility with minimum capacity of 200 MT per month for C or Z or any other profiles all put together. To substantiate this, delivery challans shall be furnished for at least 2 months within the past two year Aug ’15 – Jun ’17, showing minimum 200MT each month. BHEL reserves the right to inspect the works in case required. Vendor shall indicate the address of the works.

2.2 Bidder should have supplied module mounting structures (ground mounted solar PV application) to MW-sized solar power plant projects. To substantiate this, bidder shall furnish necessary credentials viz purchase order copies / certificates from the clients with details of supply.

2.3 Vendors shall furnish the solvency certificate issued by nationalized/ scheduled banks for minimum worth of Rupees One (1) crores, with date of issue not before 3 months from tender opening date.

3.0 Vendor scope of supply

#	Item description	Qty	Fabrication Details
1	Supply of Module mounting structure as per Annexure 1. Bill of Material & Annexure 2 BHEL GA Drawing.	Annexure 1& Annexure 2.	As per BHEL drg. No. 3 679 05 00887.

4.0 Enclosures to this tender

1. Bill of Material**.**
2. BHEL Drawing 3 679 05 00887.
3. Typical sample MQP for reference purpose.

5.0 Sub-vendors of steel sheets

Raw materials (steel sheets) to be procured from OEM sub-vendors viz Tata, SAIL, RINL, Essar, Lloyd, Jindal. In case of any sub-vendors other than the above, the vendor, after receipt of PO from BHEL, shall obtain approval from BHEL prior to procurement.

6.0 Manufacturing Quality Plan (MQP)

A typical sample of MQP for the MMS items is enclosed. Inspection reports to be made with respect to the same.

7.0 Prototype Inspection

A prototype MMS structure has to be made and inspected by BHEL-EDN personnel. The inspection shall be carried out at pre-galvanized assembled stage and post galvanized assembled stage. The prototype will be inspected with all MMS members including fasteners and 2 nos of PV Module frame. The PV Module frame drawing will be supplied by BHEL –EDN and Vendor to make 2 frames with angles .As the prototype is done for dimensional check so the material strength of MMS members and fasteners need not be as per BOM but the dimensions to be exactly as per fabrication drawings. Subsequent to the clearance of the above prototype structure only, bulk manufacture of MMS structure shall commence.

8.0 Test reports

Every PSI Call should accompany the following reports.

1. MTC.
2. Internal inspection report (Dimensional + galvanization thickness) as per instruction specified in BHEL MQP and BHEL Drawing.
3. Photographs of the offered lot.
4. BHEL- EDN will go through the reports and depute personnel for PSI.

9.0 Packing instructions

The MMS components shall be packed in bundles with steel straps with corner wedges of plastic/fibre /rubber material to prevent damage to surface during handling. Adequate no. of steel straps shall be provided depending upon the length of the MMS components and bundles shall be in lots of 50 no.s/100 no.s for easy handling and accounting.

10.0 Marking Instructions:

All MMS components shall be marked for MMS part identification on 100% basis.

11.0 Delivery Schedule:

1. There is no prototype for Column member, final drawing for Column will be issued with Purchase order and manufacturing to begin with this drawing and supply to complete within 4 weeks of placement of purchase order.
2. For all other MMS members Prototype to be Offered within 10 days of purchase order, final drawings of all MMS members shall be issued with the Purchase order. Prototype to be done with all MMS members including Column and as specified in GA-Drawing.
3. All other items of the BOM –Supply to start from 4 weeks of Prototype Clearance and end by 7 weeks of Prototype Clearance.

Supply of Columns & Super Structures for MMS for 10 MW WBSEDCL SANTALDIH

Material Code	Mark No/ Section	Item Description	Min. Yield Strength (MPa)	Type of material	Lip in mm	Length in mm	CS Area cm2	Unit Wt	Weight of Each piece. In Kg	Total Nos to be supplied	Total Wt in Kgs
PS0679073183	CL1/180CS50X3.15	Item-1 MMS Column	FY350	CF with HDG 80 microns	20	2947	9.23	7.25	21.35	6900	147333
PS0679073191	RF1/100CS50X2	Item-2 MMS Rafter	FY350		15	3280	4.26	3.34	10.97	6900	75684
PS0679073205	PU1/80CS50X1.6	Item-3 Purlin1	FY350		10	3361	2.98	2.34	7.86	6640	52206
PS0679073213	PU2/80CS50X1.6	Item-4 Purlin2	FY350		10	3310	2.98	2.34	7.74	6640	51414
PS0679073221	PU3/80CS50X1.6	Item-5 Purlin3	FY350		10	3361	2.98	2.34	7.86	6640	52206
PS0679073230	SAG ANGLE/20LU20X2	Item-7 Sag Angle	FY350		NA	1250	0.726	0.57	0.71	10480	7466
PS0679073248	BR1A/60LU50x2	Item-8 Bracing1A	FY350		NA	1775	1.926	1.51	2.68	6900	18517
PS0679073256	BR1/40LU40X2	Item-9 Bracing	FY350		NA	1351	1.526	1.20	1.62	6900	11167
PS0679073264	Purlin splice/ 140X70X5	Item-10 Purlin Splice	FY 250	Hot rolled plates with HDG 80 microns	NA	140	3.5	2.75	0.38	13280	5108
PS0679073272	Column Plate/ 320x100x6	Item-11 Column Plate	FY 250		NA	320	8	4.71	1.51	6900	10400
PS0679073280	PU4/80CS50X2	Item-6 Purlin4	FY350	CF with HDG 80 microns	10	5030	3.86	3.03	15.24	520	7926
											439427

Total Weight for Supplies is approximately 439.4 MT

(N. Yasvanth)

(Puram Mishra)

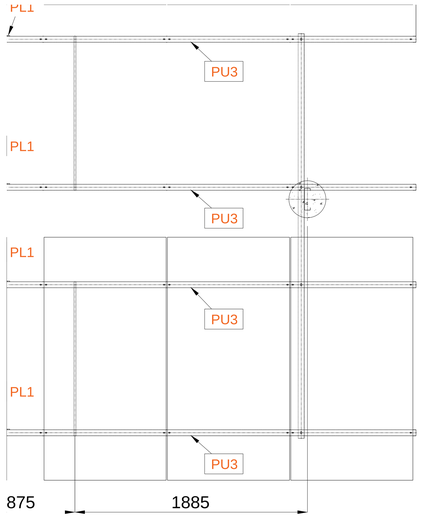

) FOR 0°

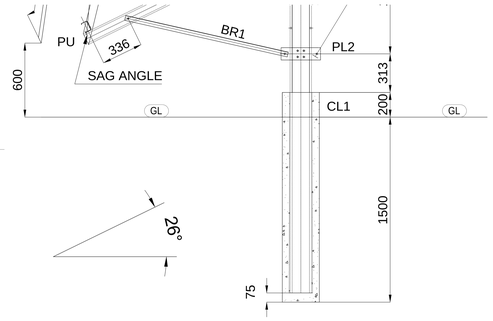

SIDE VIEW FOR 26°(FIXED TILT)MADE LOOKING FROM

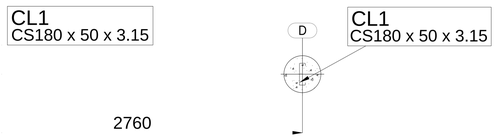

NOTES:(This note has to be read alongwith the Bill of material).

1. DIMENSIONS FOR COLD ROLLED STEEL ANGLE/CHANNEL SECTIONS SHALL BE IN ACCORDANCE WITH IS:811:1987.
2. DIMENSIONS OF PLATES, FLAT BARS SHALL CONFORM TO IS:1730.
3. FABRICATION AND ERECTION SHALL BE CARRIED OUT INACCORDANCE WITH IS:800 AND IS:801.
4. ALL MMS MEMBERS TO BE HOT DIP GALVANISATED IN ACCORDANCE WITH IS:2629-1985 AND IS 4759 . HOWEVER THE MINIMUM GALVANIZATION THICKNESS FOR ALL MMS MEMBERS TO BE 80 MICRONS.
5. GENERAL ASSEMBLY TOLERANCE LINEAR +/- 2MM.
6. GENERAL ASSEMBLY TOLERANCE ANGULAR +/- 1°.
7. HOLE SIZES ARE SHOWN AFTER GALVANIZATION/TREATMENT.
8. REMOVE ALL SHARP AND BURR EDGES.
9. MMS EARTHING ARRANGEMENT TO BE SHOWN IN RELEVANT DRAWING.
10. PROTOTYPE TO BE DONE AS PER CLAUSE MENTIONED IN PURCHASE SPEC NO PS-439-1142.
11. LENGTH OF PURLIN SUBJECT TO MINOR CHANGES AFTER PV MODULE FINALIZATION.
12. MAXIMUM LENGTH OF ANY FABRICATED MEMBER NOT TO EXCEED 5.1MTS.

GENERAL NOTES

1. ALL DIMENSIONS ARE IN MILLIMETERS UNLESS OTHERWISE SPECIFIED.
2. DO NOT SCALE THE DRAWING ONLY WRITTEN DIMENSIONS TO BE READ.

PROJECT : 10MWp SOLAR POWER PROJECT
CUSTOMER : SANTALDIH, WBSEDCL

ME	SIGN	DATE
		100617
		100617
S		100617
F PRINTS		
4		

DEPT. SC&PV | CODE 439

BHARAT HEAVY ELECTRICALS LIMITED.
ELECTRONICS DIVISION, BANGALORE

TITLE: GA OF MODULE MOUNTING STRUCTURE

No. OF SHEETS	09
SHEET No.	01
REV	01

BHEL DRG. No. 3 679 05 00887

MANUFACTURING QUALITY PLAN (MQP)

			ITEM :	MODULE MOUNTING STRUCTURE FOR SPV PLANT			PROJECT NAME:	WBSEDCL-Santaldih					
			MQP NO.:				CONTRACT NO.:						
			REV. NO.:				CONTRACTOR:						
			DATE :				CUSTOMER :	BHEL					
Sr. No.	Component & Operation	Characteristics	Class	Typ of Check	Quantum of Check		Reference Document	Acceptance Norms	Format of Record		Agency		Remarks
					M	C					M	C	
1	2	3	4	5	6		7	8	9	D	10		11
A	**Structures**												
1	**RAW MATERIAL**												Steel to be procured from OEM sub-vendors viz Tata, SAIL, RINL, Essar, Lloyd, Jindal. In case of any sub-vendors other than the above, vendor, after receipt of PO from BHEL, shall obtain approval from BHEL.
1.1	**Hot Rolled Structures Steel**-As per BOM and BHEL Dwg no (3 679 05 00887)	a) Chemical Composition	Major	Chemical	1 Sample/40 MT or Part thereof for each class of Product.	Each lot	Approved. Drg IS: 2062-2011 IS: 8500-1991 IS: 228-1987 IS: 1608-2005 IS: 1599-1983		Procedure's/ fabricator's Certificate/ Check Test Reports	√	V	V	IS:2062-2011/Material Grade refrred as per drawing/BOM shall be used. All tolerances as per relevant code/Tech Spec/drawing
		b) Tensile Test(TS, YS %Elongation)	Major	Mech.	1 Sample/40 MT or Part thereof for each class of Product.	Each lot	Approved. Drg IS: 2062-2011 IS: 8500-1991 IS: 228-1987 IS: 1608-2005 IS: 1599-1983	Approved. Drg IS: 2062-2011 IS: 8500-1991 IS: 228-1987 IS: 1608-1995 IS: 1599-1983 Material Shall be free from surface defects like lamination, rough,jagged & imperfect edges & other harmful defect(removal) of minor surface defect as per IS:2062C1-7 is acceptable	Procedure's/ fabricator's Certificate/ Check Test Reports	√	V	V	
		c) Bend Test	Major	Mech.	1 Sample/40 MT or Part thereof for each class of Product.	Each lot	Approved. Drg IS: 2062-2011 IS: 8500-1991 IS: 228-1987 IS: 1608-2005 IS: 1599-1983		Procedure's/ fabricator's Certificate/ Check Test Reports	√	V	V	
		d) Visual Check for Surface	Major	Visual	100%	Each lot	Approved. Drg IS: 2062-2011 IS: 8500-1991 IS: 228-1987 IS: 1608-2005 IS: 1599-1983		Procedure's Inspection Report	√	P	V	
		e)Dimension	Major	Measure	As per IS:2500-1992 SSP Level -1 AQL 6.5	Random for each lot	IS:808-1989 (Angles) IS:1852-1985 (Plates) IS:1730-P-1-1989 IS: 2062-2011	IS:808-1989 (Angles) IS:1852-1985 (Plates) IS:1730-P-1-1989 IS: 2062-2011	Fabricator's Inspection Report	√	P	V	
1.2	**Cold formed sections**-As per BOM in BHEL Dwg no (3 679 05 00887)	a) Chemical Composition	Major	Chemical	100%	Each lot	Approved. Drg IS:811 IS: 1161 or IS: 1079	Approved. Drg IS:811 IS: 1161 or IS: 1079	MTC & Supplier's Inspection report	√	V	V	All cold formed steel material shall have a minimum Fy as per BOM BHEL Dwg no (3 679 05 00887).
		b) Tensile Test(TS, YS %Elongation)	Major	Mech.	100%	Each lot	Approved. Drg IS:811 IS: 1161 or IS: 1079	Approved. Drg IS:811 IS: 1161 or IS: 1079	MTC & Supplier's Inspection report	√	V	V	
		c) Bend Test	Major	Mech.	100%	Each lot	Approved. Drg IS:811 IS: 1161 or IS: 1079	Approved. Drg IS:811 IS: 1161 or IS: 1079	MTC & Supplier's Inspection report	√	V	V	
		d) Visual Check for Surface	Major	Visual	100%	Each lot	Approved. Drg IS:811 IS: 1161 or IS: 1079	Approved. Drg IS:811 IS: 1161 or IS: 1079	MTC & Supplier's Inspection report	√	V	V	
		e)Dimension	Major	Measure	As per IS:2500-1992 SSP Level -1 AQL 6.5	Random for each lot	IS:811	IS:811	Fabricator's Inspection Report	√	P	V	
		i) For cold formed sections (columns .) Length, out of squareness, camber-weight	Major	Measure	As per IS:2500-1992 SSP Level -1 AQL 6.5	Random for each lot	IS:811	IS:811	Fabricator's Inspection Report	√	P	V	
1.3	Zinc	Chemical Composition	Major	Measure	1 Sample/lot	Random for each lot	IS:209-1992	IS:209-1992 Zn-99.5%	Procedure's TC/ Check Test Report	√	P	V	

MANUFACTURING QUALITY PLAN (MQP)

			ITEM :	MODULE MOUNTING STRUCTURE FOR SPV PLANT			**PROJECT NAME:**	WBSEDCL-Santaldih					
			MQP NO.:				**CONTRACT NO.:**						
			REV. NO.:				**CONTRACTOR:**						
			DATE :				**CUSTOMER :**	BHEL					
Sr. No.	**Component & Operation**	**Characteristics**	**Class**	**Typ of Check**	**Quantum of Check**		**Reference Document**	**Acceptance Norms**	**Format of Record**		**Agency**		**Remarks**
					M	**C**					**M**	**C**	
1	**2**	**3**	**4**	**5**	**6**		**7**	**8**	**9**	**D**	**10**		**11**
2	**IN PROCESS INSPECTION**												
2.1	Fabrication of parts of assy.	a)Straightening	Major	Visual	100%	Random for each lot	IS:802-P-11-1978	IS:802-P-11-1978	Fabricator's Inspection Report	√	P	V	
		b)Cropping (Cutting)	Major	Visual	1st piece & every 100th piece	Random for each lot	Approved drgs. Shop Sketches	Approved Drgs./Tech. Spec.	Fabricator's Inspection Report	√	P	V	
		c)Stamping (identification-mark Number)	Major	Visual	100%	Random for each lot	Approved Drgs./ Tech. Spec.	Approved Drgs./Tech. Spec.	Fabricator's Inspection Report	√	P	V	
		d) Making hole by Punching/Drilling.	Major	Measure	1st piece & every 100th piece	Random for each lot	IS:802-P-11:1978	Holes should be perpendicular to surface & difference in dia. Of holes on the two sides of plates / angle should not be more then 0.8mm. Holes near bends to be punched/ drilled.	Fabricator's Inspection Report	√	P	V	Punching may be adopted for section upto 12mm thick. For thicker drilling to be done
		e) Edge Security	Major	Measure	1st piece & every 100th piece	Random for each lot	IS:802-P-11:1978	IS:802-P-II:1978 Table. 1	Fabricator's Inspection Report	√	P	V	
		f)Hole to Hole Distance	Major	Measure	1st piece & every 100th piece	Random for each lot	IS:802-P-11:1978	Tolerance cumulative # 2mm & between consecutive hole #1mm	Fabricator's Inspection Report	√	P	V	
		g)Overall length of members	Major	Measure	1st piece & every 100th piece	Random for each lot	IS:802-P-11:1978	Tolerance #2mm	Fabricator's Inspection Report	√	P	V	
		h) Gauge Distance	Major	Measure	1st piece & every 100th piece	Random for each lot	IS:802-P-11:1978	Tolerance # 1mm	Fabricator's Inspection Report	√	P	V	
		i) Notching flange cut, corner cut & level cut	Major	Measure	1st piece & every 100th piece	Random for each lot	IS:802-P-11:1978	5mm on specified length of cut operation by shearing up to 12mm thick & by gas cutting for material above 12mm thick/IS:802-P-II:1978 Table. 1	Fabricator's Inspection Report	√	P	V	
		j) Heel Grinding	Major	Measure	1st piece & every 100th piece	Random for each lot	IS:802-P-11:1978	After Grinding thickness on heel should be equal or more than the thickness of the member with +2mm/.0mm/ as per spec.	Fabricator's Inspection Report	√	P	V	
		k) Bending MS	Major	Measure	100%	Random for each lot	IS:802-P-11:1978	Tech Specification cold bend upto 76X6mm upto 10, upto 100X8 upto 5 all other angle section & bend angle shall be bent hot.	Fabricator's Inspection Report	√	P	V	
		l) Bending MS Plate	Major	Measure	1st piece & every 100th piece	Random for each lot	IS:802-P-11:1978	Cold bend 12mm thick upto 15angle , greater bend & other thickness shall be bent hot	Fabricator's Inspection Report	√	P	V	
		m) Other Dimension	Major	Measure	1st piece & every 100th piece	Random for each lot	IS:802-P-11:1978/ IS:7215-1974	IS:7215-1974	Fabricator's Inspection Report	√			
2.3	**GALVANIZING**												
2.31	Degreasing (Acid base)	a)Solution Strength	Major	Visual	1 Sample Daily	Random for each lot	IS:2629-1985	IS:2629-1985	Galvanizer QC Records	√	P	V	
		b)PH Value	Major	Chem.	1 Sample Daily	Random for each lot	IS:2629-1985	IS:2629-1985	Galvanizer QC Records	√	P	V	
2.32	Rinsing	a)Cleanliness	Major	Visual	1 Sample Daily	Random for each lot	IS:2629-1985	IS:2629-1985	Galvanizer QC Records	√	P	V	
2.33	Pickling	a)Acid Content	Major	Chem.	1 Sample Daily	Random for each lot	IS:2629-1985	IS:2629-1985	Galvanizer QC Records	√	P	V	
		b)Iron Content	Major	Chem.	1 Sample Daily	Random for each lot	IS:2629-1985	IS:2629-1985	Galvanizer QC Records	√	P	V	

MANUFACTURING QUALITY PLAN (MQP)

			ITEM :	MODULE MOUNTING STRUCTURE FOR SPV PLANT			**PROJECT NAME:**	WBSEDCL-Santaldih					
			MQP NO.:				**CONTRACT NO.:**						
			REV. NO.:				**CONTRACTOR:**						
			DATE :				**CUSTOMER :**	BHEL					
Sr. No.	**Component & Operation**	**Characteristics**	**Class**	**Typ of Check**	**Quantum of Check**		**Reference Document**	**Acceptance Norms**	**Format of Record**		**Agency**		**Remarks**
					M	**C**					**M**	**C**	
1	**2**	**3**	**4**	**5**	**6**		**7**	**8**	**9**	**D**	**10**		**11**
2.34	Rinsing	Cleanliness (Mill Scale paint marks etc.)	Major	Chem.	1 Sample Daily	Random for each lot	IS:2629-1985	IS:2629-1985	Galvanizer QC Records	√	P	V	
2.35	Pre-Fluxing	a)Dry Fluxing	Major	Chem.	1 Sample Daily	Random	IS:2629-1985	IS:2629-1985	Galvanizer QC Records	√	P	V	Pre-Fluxing in Zinc Chlorides & ammonium chloride solution.
		b)Iron Content	Major	Chem.	1 Sample Daily	Random	IS:2629-1985	IS:2629-1985	Galvanizer QC Records	√	P	V	
		c)Specific Gravity	Major	Chem.	1 Sample Daily	Random	IS:2629-1985	50gm/Ltr. Max 1.11 to 1.30	Galvanizer QC Records	√	P	V	
		d)pH Value	Major	Chem.	1 Sample Daily	Random	IS:2629-1985	4 to 5	Galvanizer QC Records	√	P	V	
		e)Temperature	Major	Measure	Hourly	Random	IS:2629-1985	IS:2629-1985	Galvanizer QC Records	√	P	V	
2.36	Pre Heating	Temperature	Major	Measure	Hourly	Random	IS:2629-1985	IS:2629-1985	Galvanizer QC Records	√	P	V	Calibrated Instrument to be used.
2.37	Hot Dip Galvanizing	a)Temperature	Major	Measure	Continuous recording & hourly measurement	Random	IS:2629:1985	440 to 460 deg. Celsius	Galvanizer's QC Records.	√	P	V	Zinc Bath temperature to be recorded continuously on graph & hourly manual recording shall also be done using digital temp. indicator & actual verification by thermometer.
		b)immersion time	Major	Measure	Each Lot	Random	IS:2629-1985	IS:2629-1985	Galvanizer's QC Records.	√	P	V	
		c) Removal of excessive zinc while lifting from zinc bath by bumping process.	Major	Measure	Each Item	Random	IS:2629-1985	IS:2629-1985	Galvanizer's QC Records.	√	P	V	Wiping & scrapping process not to be used.
2.38	Quenching or Running Water	Cooling & cleaning.	Major	Measure	Each Item	Random	IS:2629-1985	IS:2629-1985	Galvanizer's QC Records.	√	P	V	
2.39	Post Treatment or Dichromating.	Solution Strength	Major	Chem.	Once in day	Random	IS:2629-1985	IS:2629-1985	Galvanizer's QC Records.	√	P	V	
2.4	Check on member after galvanizing.	a) Surface Defect & Finish.	Major	Visual	100%	Random	IS:2629-1985	IS:2629-1985	Galvanizer's QC Records.	√	P	V	
		b) Thickness of Zinc Coating.	Major	Measure	Each Batch	Random	IS:4759:1996	IS:4759:1996	Galvanizer's QC Records.	√	P	V	
		c) Mass of Zinc Coating	Major	Chem.	1 Sample/ Shift	Random	IS:4759:1996	IS:4759:1996	Galvanizer's QC Records.	√	P	V	
		d) Uniformity of zinc coating (Preece Test)	Major	Chem.	Sample/ Shift	Random	IS:2633:1986	IS:2633:1986	Galvanizer's QC Records	√	P	V	
		e) Adhesion test of zinc coating (Pivot Hammer Test/Knife Test)	Major	Chem.	Sample/ Shift	Random	IS:2633:1986	No Removal or Lifting of Coating between hammer impression/ coating should not be peeled off.	Galvanizer's QC Records	√	P	V	
2.41	Stenciling of Mark/Number	Marking	Major	Visual	100%	Random	Approved Drg.	Approved Drg.	Galvanizer's QC Records	√	P	V	At Both Ends with black Paint
3	**FINAL INSPECTION**												
3.1	Fabrication Member after Galvanizing	a)Surface Finish, Defects & dichromating.	Major	Visual	100%	Random for each lot as per IS 2500 for reduced inspection	IS:2629:1985	IS:2629:1985	Final Inspection Report	√	P	W	Test qty./ sample no.s shall be as per offered lot size and IS:2500 for reduced inspection level S-4- to be fixed at time of offering.
		b)Dimensions	Major	Measure	Random Sample from Each lot offered for inspection on single occasion	Random for each lot as per IS 2500 for reduced inspection	IS:4759:1996 IS:802-P-1:1978	IS:4759:1996 IS:802-P-1:1978		√	P	W	
3.2	Verification of basic material quality	a)Chemical Composition	Major	Chem.	Random sample from each lot offered for inspection on single occasion.	Random for each lot as per IS 2500 for reduced inspection	Approved Drg. IS:2062:1992 IS:8500:1991 IS:228:1987 IS1608:1995 IS:1599:1985	Approved Drg. IS:2062:1992 IS:8500:1991 IS:228:1987 IS1608:1995 IS:1599:1985	Fabricator's Test Reports	√	P	V	Sample for chemical test to be sealed for third party lab or test to be witnessed at manufacturer's lab depending on availability of apparatus.

MANUFACTURING QUALITY PLAN (MQP)

			ITEM :	MODULE MOUNTING STRUCTURE FOR SPV PLANT			**PROJECT NAME:**	WBSEDCL-Santaldih					
			MQP NO.:				**CONTRACT NO.:**						
			REV. NO.:				**CONTRACTOR:**						
			DATE :				**CUSTOMER :**	BHEL					
Sr. No.	**Component & Operation**	**Characteristics**	**Class**	**Typ of Check**	**Quantum of Check**		**Reference Document**	**Acceptance Norms**	**Format of Record**		**Agency**		**Remarks**
					M	**C**					**M**	**C**	
1	**2**	**3**	**4**	**5**	**6**		**7**	**8**	**9**	**D**	**10**		**11**
		b)Tensile Test (TS,YS,%E)	Major	Mech.	Random sample from each lot offered for inspection on single occasion.	Random for each lot as per IS 2500 for reduced inspection	Approved Drg. IS:2062:1992 IS:8500:1991 IS:228:1987 IS1608:1995 IS:1599:1985	Approved Drg. IS:2062:1992 IS:8500:1991 IS:228:1987 IS1608:1995 IS:1599:1985	Fabricator's Test Reports	√	P	W	
		c)Bend Test	Major	Mech.	Random sample from each lot offered for inspection on single occasion.	Random for each lot as per IS 2500 for reduced inspection	Approved Drg. IS:2062:1992 IS:8500:1991 IS:228:1987 IS1608:1995 IS:1599:1985	Approved Drg. IS:2062:1992 IS:8500:1991 IS:228:1987 IS1608:1995 IS:1599:1985	Fabricator's Test Reports	√	P	W	
3.3	Fillet Welding Quality	Weld Quality	Major	Visual	100%	Random for each lot as per IS 2500 for reduced inspection	IS:822:1970 & As per Approved Drg.	IS:822:1970 & As per Approved Drg.	Fabricator's Test Reports	√	P	W	W=Random10%. Butt weld not permitted.
3.4	Galvanizing	a)Thickness of Zinc Coating	Critical	Measure	Random	Random for each lot as per IS 2500 for reduced inspection	IS:2629:1985/ As per tech. spec.	IS:2629:1985/ As per tech. spec.	Fabricator's QC Reports	√	P	W	
		b)Mass of Zinc coating	Critical	Measure	Sample/ each thickness offered for insp. on single occasion	Random for each lot as per IS 2500 for reduced inspection	IS:6745:1972/ As per tech spec.	IS:6745:1972/ As per tech spec.	Fabricator's QC Reports	√	P	W	
		c)Uniformity of Zinc Coating	Critical	Measure	Sample/ each thickness offered for insp. on single occasion	Random for each lot as per IS 2500 for reduced inspection	IS:2633:1986/ As per tech spec.	IS:2633:1986/ As per	Fabricator's QC Reports	√	P	W	
		d)Adhesion Test of Zinc Coating (Pivot Hammer/Knife Test)	Critical	Measure	Sample/ each thickness offered for insp. on single occasion	Random for each lot as per IS 2500 for reduced inspection	IS:2629:1985	IS:2629:1985	Fabricator's QC Reports	√	P	W	
3.5	Review of Documents (TC/TR)	a)Document Review	Major	Review		Random	As Applicable	As Applicable	As Per QA Plan	√	P	V	
4	PACKING STORING /BUNDLING & HANDLING	Packing	Major	Visual	Every Lot	Random	IS:802-P-1:1978	Piece of light sections to wire bundled & heavy sections to be supplied loose. Stacking to have proper ventilation.	As Per QA plan	√	P	V	1)Sequential supplies to be monitored & assured by main contractor.
5	DESPATCH	Verification a)Sequential supplies b)Stenciling/Part No. c)Quality	Major	Review	As per packing List	Random	Appd. Drgs. & BOM	Appd. Drgs. & BOM	Fabricator's Dispatch Records	√	P	V	2)Material rejected by Customer shall be kept under separated custody marked with plant till all the supplies are dispatched to site or destroyed by cutting Presence of Customer Representative.

LEGEND:

M: MANUFACTURER
C:BHEL and/or WBSEDCL
D:DOCUMENT
P:PERFORM
W:WITNESS
V: VERIFICATION

MANUFACTURER CUSTOMER

SPECIAL COMMERCIAL CONDITIONS OF CONTRACT (SCC) - for foreign vendors

RFQ No. SPKSCPV003 Dtd.19.07.2017 Due Date (Tech Bid): 02.08.2017

Sl. No.	Terms	BHEL Term	Confirmation	Deviation/Remarks
1	**Pre-Qualification Criteria (PQC)**	a) Bidder shall have in-house cold roll forming facility with minimum capacity of 200 MT per month for C or Z or any other profiles all put together. To substantiate this, delivery challans shall be furnished for at least 2 months within the past two year Aug '15 – Jun '17, showing minimum 200MT each month. BHEL reserves the right to inspect the works in case required. Vendor shall indicate the address of the works. b) Bidder should have supplied module mounting structures (ground mounted solar PV application) to MW-sized solar power plant projects. To substantiate this, bidder shall furnish necessary credentials viz purchase order copies / certificates from the clients with details of supply. c) Vendors shall furnish the solvency certificate issued by nationalized/ scheduled banks for minimum worth of Rupees One (1) crores, with date of issue not before 3 months from tender opening date.	Complied	
2	**Bidding**	**(a)** Bid has to be submitted as Two Part – Techno Commercial Bid (Part-1) & Price Bid (Part-II).**Bids shall be submitted through e-Procurement portal https://bheleps.buyjunction.in of M/s. Mjunction Services Limited.**	Complied	
		(b) SCC & Annexure A1 to be submitted along with technical bid (Part-I) & **Annexure A2** to be submitted along with Price bid (Part-II).	Complied	
		(c) Clause-wise compliance to BHEL Purchase specification along with all documents as called in Technical specification to be submitted along with technical bid(Part-1).	Complied	
3	**Price basis:**	Firm i.e., from the date of PO to completion of supply if I&C is not applicable. If I&C is in supplier's scope,then the prices shall remain firm till commissioning & handing-over of the complete system. (PVC clause not acceptable).	Complied	
4	**Terms of Delivery:**	CIF Seaport/ CIF Airport/ FCA Airport (Indicate name of Seaport/Airport)	Complied	
5	**Delivery Period:**	**Supply :** Within 8 (Eight) weeks from date of PO for item no 1 (MMS Column). For remaining items - Prototype to be made within 10 days of PO. Supplies to start within 4 weeks of prototype clearance and ends by 7 weeks of prototype clearance.	Acceptable / Not acceptable	
6	**Payment Term:**	**(a) Supply:** 1) 80% of the basic value (excluding I&C charges) will be paid with 45 days credit, against Sight draft, from the date of AWB/BOL on submission of complete set of documents as in PO. 2) 10% of basic supply value will be paid on completion of I&C against submission of supplementary invoice along with proof of completion of I&C along with I&C charges (if any). 3) Balance 10% (retention money) against submission of supplementary invoice along with PBG valid for Warranty Period+3 months Claim Period from BHEL Consortium Bank. **Note :** In exceptional cases, if vendor fails to submit PBG after supplies, vendors can also accept for the final 10% payment, payable after the warranty period + 3 months of claim period against supplementary invoice subject to the completion of commissioning (if applicable) as PBG is linked to Warranty period.	Acceptable / Not acceptable	
		(b) For any deviation in payment term, the offer will be liable for loading as per Clause G of ITB.	Acceptable / Not acceptable	
7	**Evalution of L1**	Over all L1 of Supply on "FOR" basis to site will only be considered.	Complied	
8	**Warranty :**	**Warranty for Supply :** 18 months from supply, 12 months from I&C whichever is earlier. **Warranty/Guarantee for Workmanship & I&C :** NA	Acceptable / Not acceptable	
9	**Pre Shipment Inspection**	**(a)** Pre Shipment Inspection will be carried out by BHEL/Customer for which test report shall be sent one week in advance.	Acceptable / Not acceptable	
		(b) Pre Shipment Inspection charges , if any, shall be considered while evaluating your offer to arive at "Total Cost to BHEL".The charges for the same shall be informed to you before Price Bid Opening/Reverse Auction.	Acceptable / Not acceptable	
10	**Penalty**	**(a) Supply:** Penalty of 0.5% per week at the basic price of the good for undelivered quantity of supply portion, subject to a maximum of 10%. For Supply, Pre Shipment Inspection Call Letter Date (Receipt of test report) will be treated as delivery for purpose of penalty.	Acceptable / Not acceptable	
		(b) For any deviation in penalty term, the offer will be liable for loading as per Clause No. G, Point No.(b) of ITB.	Acceptable / Not acceptable	
11	**PBG**	PBG shall be furnished in the BHEL prescribed format.	Acceptable / Not acceptable	
12	**Validity:**	Quotation should remain valid for a period of 90 days from the due date.	Acceptable / Not acceptable	
13	**Bank charges (If applicable):**	**(a)** All Bank charges to seller's account	Acceptable / Not acceptable	
		(b) Deviation will be liable for loading as per Cl.G of ITB	Acceptable / Not acceptable	
14	**Reverse Auction:**	BHEL reserves the right to conduct Reverse auction.Procedure for the same will be informed by BHEL .	Acceptable / Not acceptable	
15	**DUN No.**	Please mention Dun & Bradstreet No.(DUN No.)		
16	**Consignment Details**	Weight and Dimension of consignment with packing.	Furnished / To be furnished	
17	**Despatch Documents:**	Despatch documents include Air Waybill/Bill of Lading, Invoice, Packing list, PSI letter copy and Warranty certificate.	Acceptable / Not acceptable	
		One copy of Invoice, Packing list and Air Way Bill /Bill of Lading shall be faxed/emailed immediately after despatch. Also one copy of packing list to be kept inside each box for easy identification of material at site.		
18	**Other terms & conditions**	For any other Terms and Conditions, kindly refer to the following: A: ITB (document ref :SCPV: BOS: ITB - Rev 02) B: GCC (document ref: SCPV: BOS: GCC - Rev 02)	Acceptable / Not acceptable	
20	**BOS %**	The percentage of Supply, I&C and O&M for values shall be in the range indicated below(approximately,with overall tallying to 100%) : (a) Supply : 100%	Complied	

AUTHORISED SIGNATORY WITH SEAL

Annexure-A1

TECHNICAL BID ENCLOSURE FOR COMPLIANCE OF QUOTE : UNPRICED BID (Foreign Vendors)							
RFQ No. SPKSCPV001 Dtd.19.07.2017 Due Date (Tech Bid): 02.08.2017							
Sl No.	**Material Code**	**DESCRIPTION**	**Quantity**	**Unit**	**Quoted**	**HSN/SAC CODES**	**Currency**
1	PS0679073183	Item-1 MMS Column	6900	NO	Yes / No		
2	PS0679073191	Item-2 MMS Rafter	6900	NO	Yes / No		
3	PS0679073205	Item-3 Purlin1	6640	NO	Yes / No		
4	PS0679073213	Item-4 Purlin2	6640	NO	Yes / No		
5	PS0679073221	Item-5 Purlin3	6640	NO	Yes / No		
6	PS0679073230	Item-7 Sag Angle	10480	NO	Yes / No		
7	PS0679073248	Item-8 Bracing1A	6900	NO	Yes / No		
8	PS0679073256	Item-9 Bracing	6900	NO	Yes / No		
9	PS0679073264	Item-10 Purlin Splice	13280	NO	Yes / No		
10	PS0679073272	Item-11 Column Plate	6900	NO	Yes / No		
11	PS0679073280	Item-6 Purlin4	520	NO	Yes / No		

Please refer RFQ/Tender for detailed description of items.

Note:

The above format is to be used for Unpriced bid.

AUTHORISED SIGNATORY WITH SEAL

ANNEXURE A2

PRICE BID (Foreign Vendors)							
RFQ No. SPKSCPV001 Dtd.19.07.2017 Due Date (Tech Bid): 02.08.2017							
Sl No.	**Material Code**	**DESCRIPTION**	**Quantity**	**Unit**	**Quoted**	**HSN/SAC CODES**	**Currency**
1	PS0679073183	Item-1 MMS Column	6900	NO	Yes / No		
2	PS0679073191	Item-2 MMS Rafter	6900	NO	Yes / No		
3	PS0679073205	Item-3 Purlin1	6640	NO	Yes / No		
4	PS0679073213	Item-4 Purlin2	6640	NO	Yes / No		
5	PS0679073221	Item-5 Purlin3	6640	NO	Yes / No		
6	PS0679073230	Item-7 Sag Angle	10480	NO	Yes / No		
7	PS0679073248	Item-8 Bracing1A	6900	NO	Yes / No		
8	PS0679073256	Item-9 Bracing	6900	NO	Yes / No		
9	PS0679073264	Item-10 Purlin Splice	13280	NO	Yes / No		
10	PS0679073272	Item-11 Column Plate	6900	NO	Yes / No		
11	PS0679073280	Item-6 Purlin4	520	NO	Yes / No		

Please refer RFQ/Tender for detailed description of items.

Note:

The above format is to be used for Priced bid.

AUTHORISED SIGNATORY WITH SEAL

SPECIAL COMMERCIAL CONDITIONS OF CONTRACT (SCC) - for indigenous vendors				
RFQ No. SPKSCPV001 Dtd.19.07.2017 Due Date (Tech Bid): 02.08.2017				
Sl No.	**Terms**	**BHEL Term**	**Confirmation**	**Deviation / Remarks**
1	**Pre-Qualification Criteria (PQC)**	a) Bidder shall have in-house cold roll forming facility with minimum capacity of 200 MT per month for C or Z or any other profiles all put together. To substantiate this, delivery challans shall be furnished for at least 2 months within the past two year Aug '15 – Jun '17, showing minimum 200MT each month. BHEL reserves the right to inspect the works in case required. Vendor shall indicate the address of the works. b) Bidder should have supplied module mounting structures (ground mounted solar PV application) to MW-sized solar power plant projects. To substantiate this, bidder shall furnish necessary credentials viz purchase order copies / certificates from the clients with details of supply. c) Vendors shall furnish the solvency certificate issued by nationalized/ scheduled banks for minimum worth of Rupees One (1) crores, with date of issue not before 3 months from tender opening date.	Complied	
2	**Bidding**	**(a)** Bid has to be submitted as Two Part – Techno Commercial Bid (Part-1) & Price Bid (Part-II).**Bids shall be submitted through e-Procurement portal https://bheleps.buyjunction.in of M/s. Mjunction Services Limited.**	Complied	
		(b) SCC & Annexure B1 to be submitted along with Technical bid (Part-I) & **Annexure B2** to be submitted along with Price bid (Part-II).	Complied	
		(c) Clause-wise compliance to BHEL Purchase specification along with all documents as called in Technical specification to be submitted along with technical bid(Part-1).	Complied	
3	**Price Basis**	Firm i.e., from the date of PO to completion of supply if I&C is not applicable. If I&C is in supplier's scope,then the prices shall remain firm till commissioning & handing-over of the complete system.(PVC clause not acceptable).	Complied	
4	**Terms of Delivery**	Free On Road Basis to Project site : 10MW solar PV power plant at WBSEDCL Santaldih.	Complied	
5	**Delivery Period**	**Supply :** Within 8 (Eight) weeks from date of PO for item no 1 (MMS Column). For remaining items - Prototype to be made within 10 days of PO. Supplies to start within 4 weeks of prototype clearance and ends by 7 weeks of prototype clearance.	Acceptable / Not acceptable	
6	**Payment Term**	**(a) Supply:** 1) 80% of basic Supply value + 100% of taxes, duties and freight charges will be paid with 45 days credit from the receipt of material at site or 15 days credit from the date of submission of complete set of documentation whichever is later. 2) 10% of basic supply value will be paid on completion of I&C against submission of supplementary invoice along with proof of completion of I&C along with I&C charges (if any). 3) Balance 10% (retention money) against submission of supplementary invoice along with PBG valid for Warranty Period+3 months Claim Period from BHEL Consortium Bank. **Note** : In exceptional cases, if vendor fails to submit PBG after supplies, vendors can also accept for the final 10% payment, payable after the warranty period + 3 months of claim period against supplementary invoice subject to the completion of commissioning (if applicable) as PBG is linked to Warranty period.	Acceptable / Not acceptable	
		(b) For any deviation in payment term, the offer will be liable for loading as per Clause G of ITB.	Acceptable / Not acceptable	
7	**GST**	**(a)** Kindly provide the tax structure (CGST, SGST, IGST) with current rate applicable.	CGST: ……% SGST: ……% IGST: ……%	
		(b) Kindly furnish your GST No.	GST no……	
8	**Evalution of L1 vendor**	Over all L1 of Supply on "FOR" basis to site will only be considered.	Complied	

9	**Warranty**	**Warranty for Supply :** 18 months from supply, 12 months from I&C whichever is earlier. **Warranty/Guarantee for Workmanship & I&C :** NA	Acceptable / Not acceptable	
10	**Pre Shipment Inspection**	**(a)** Pre Shipment Inspection will be carried out by BHEL/Customer for which test report shall be sent atleast one week in advance.	Acceptable / Not acceptable	
		(b) Pre Shipment Inspection charges , if any, shall be considered while evaluating your offer to arive at "Total Cost to BHEL".The charges for the same shall be informed to you before Price Bid Opening/Reverse Auction.	Acceptable / Not acceptable	
11	**Penalty**	**(a) Supply:** Penalty of 0.5% per week at the basic price of the good for undelivered quantity of supply portion, subject to a maximum of 10%. For Supply, Pre Shipment Inspection Call Letter Date (Receipt of test report) will be treated as delivery for purpose of penalty.	Acceptable / Not acceptable	
		(b) For any deviation in penalty term, the offer will be liable for loading as per Clause No. G, Point No.(b) of ITB.	Acceptable / Not acceptable	
12	**Road Permit**	Road permit if applicable will be given by BHEL before Dispatch of ordered Items.However, vendor shall give request for road permit 24 hours in advance.	Complied	
13	**PBG**	PBG shall be furnished in the BHEL prescribed format.	Acceptable / Not acceptable	
14	**Despatch Documents**	Complete set of despatch documents in 3 sets shall be forwarded to BHEL directly. Despatch documents include Invoice, Lorry receipt (L/R), Packing list, PSI letter Copy, Proof of delivery such as MRC (Material Receipt Certificate)/ original acknowledged LR, Insurance intimation letter and Warranty certificate. One set of Invoice, Packing list and L/R shall be emailed immediately after despatch to BHEL-EDN, Bangalore.	Complied	
15	**Reverse Auction**	BHEL reserves the right to conduct Reverse auction.Procedure for the same will be informed by BHEL .	Acceptable / Not acceptable	
16	**Other terms & conditions**	For any other Terms and Conditions, kindly refer to the following: A: ITB (document ref :SCPV: BOS: ITB - Rev 02) B: GCC (document ref: SCPV: BOS: GCC - Rev 02)	Acceptable / Not acceptable	
17	**Validity**	Quotation should remain valid for a period of 90 days from the due date.	Acceptable / Not acceptable	
18	**Shipment**	Kindly indicate the state from where the shipment will take place.	State/Place	
19	**BOS %**	The percentage of Supply, I&C and O&M for values shall be in the range indicated below(approximately,with overall tallying to 100%) : (a) Supply : 100%	Complied	

AUTHORISED SIGNATORY WITH SEAL

ANNEXURE B1

TECHNICAL BID ENCLOSURE FOR COMPLIANCE OF QUOTE : UNPRICED BID (Indigenous Vendors)								
RFQ No. SPKSCPV001 Dtd.19.07.2017 Due Date (Tech Bid): 02.08.2017								
Sl No.	**Material Code**	**DESCRIPTION**	**QUOTED**	**QTY**	**UNIT**	**HSN/SAC CODES**	**BREAK UP OF TAX STRUCTURE (CGST/SGST/IGST/Service Tax etc) WITH CURRENT RATES**	**Remarks**
1	PS0679073183	Item-1 MMS Column	YES/NO	6900	NO			Taxes Inclusive
2	PS0679073191	Item-2 MMS Rafter	YES/NO	6900	NO			Taxes Inclusive
3	PS0679073205	Item-3 Purlin1	YES/NO	6640	NO			Taxes Inclusive
4	PS0679073213	Item-4 Purlin2	YES/NO	6640	NO			Taxes Inclusive
5	PS0679073221	Item-5 Purlin3	YES/NO	6640	NO			Taxes Inclusive
6	PS0679073230	Item-7 Sag Angle	YES/NO	10480	NO			Taxes Inclusive
7	PS0679073248	Item-8 Bracing1A	YES/NO	6900	NO			Taxes Inclusive
8	PS0679073256	Item-9 Bracing	YES/NO	6900	NO			Taxes Inclusive
9	PS0679073264	Item-10 Purlin Splice	YES/NO	13280	NO			Taxes Inclusive
10	PS0679073272	Item-11 Column Plate	YES/NO	6900	NO			Taxes Inclusive
11	PS0679073280	Item-6 Purlin4	YES/NO	520	NO			Taxes Inclusive
10	**Freight Charge including Service Tax on Freight		YES/NO	Lumpsum			NA	**Freight : Free of Cost/Extra

Please refer RFQ/Tender for detailed description of items.

Note:

1. The quoted prices shall be on "FOR" basis to project sites.
2. Please indicate taxes clearly applicable as on date.
3. The above format only shall be used for compliance.No changes are acceptable.
4. Taxes-inclusive rates for Supply, I&C and O&M to be quoted for Sl No.1-27.
5. Indicate whether freight charges and insurance charges are free of cost or will be charged extra.In absence of clarity, these charges shall be considered free of cost from vendor.(If the offer contains the freight value at actuals, it will be considered as free of cost).
6. SUCCESSFUL VENDOR SHALL SUBMIT THE BILLING BREAK UP FOR SUPPLY & I&C FOR APPROVAL AND IMPLEMENTATION.Successful vendor to furnish HSN/SAC codes against each item for billing break-up implementation.

AUTHORISED SIGNATORY WITH SEAL

ANNEXURE B2

PRICED BID (Indigenous Vendors)								
RFQ No. SPKSCPV001 Dtd.19.07.2017 Due Date (Tech Bid): 02.08.2017								
Sl No.	Material Code	DESCRIPTION	QTY	UNIT	Unit Rate (Rs.)	Total Value (Rs.) (Rate X Qty)	BREAK UP OF TAX STRUCTURE (CGST/SGST/IGST/Service Tax etc) WITH CURRENT RATES	Remarks
1	PS0679073183	Item-1 MMS Column	6,900	NO				Taxes Inclusive
	Unit rate in words :							
2	PS0679073191	Item-2 MMS Rafter	6,900	NO				Taxes Inclusive
	Unit rate in words :							
3	PS0679073205	Item-3 Purlin1	6,640	NO				Taxes Inclusive
	Unit rate in words :							
4	PS0679073213	Item-4 Purlin2	6,640	NO				Taxes Inclusive
	Unit rate in words :							
5	PS0679073221	Item-5 Purlin3	6,640	NO				Taxes Inclusive
	Unit rate in words :							
6	PS0679073230	Item-7 Sag Angle	10,480	NO				Taxes Inclusive
	Unit rate in words :							
7	PS0679073248	Item-8 Bracing1A	6,900	NO				Taxes Inclusive
	Unit rate in words :							
8	PS0679073256	Item-9 Bracing	6,900	NO				Taxes Inclusive
	Unit rate in words :							
9	PS0679073264	Item-10 Purlin Splice	13,280	NO				Taxes Inclusive
	Unit rate in words :							
10	PS0679073272	Item-11 Column Plate	6,900	NO				Taxes Inclusive
	Unit rate in words :							
11	PS0679073280	Item-6 Purlin4	520	NO				Taxes Inclusive
	Unit rate in words :							
12	**Freight Charge including Service Tax on Freight		Lumpsum				NA	**Freight : Free of Cost/Extra
	Freight charge in words :							

Please refer RFQ/Tender for detailed description of items.

Note:
1. The quoted prices shall be on "FOR" basis to project sites.
2. Please indicate taxes clearly applicable as on date.
3. The above format only shall be used for compliance.No changes are acceptable.
4. Taxes-inclusive rates for Supply, I&C and O&M to be quoted for Sl No.1-27.
5. Indicate whether freight charges and insurance charges are free of cost or will be charged extra.In absence of clarity, these charges shall be considered free of cost from vendor.(If the offer contains the freight value at actuals, it will be considered as free of cost).
6. SUCCESSFUL VENDOR SHALL SUBMIT THE BILLING BREAK UP FOR SUPPLY & I&C FOR APPROVAL AND IMPLEMENTATION.Successful vendor to furnish HSN/SAC codes against each item for billing break-up implementation.

AUTHORISED SIGNATORY WITH SEAL

ಭಾರತ್ ಹೆವಿ ಎಲೆಕ್ಟ್ರಿಕಲ್ಸ್ ಲಿಮಿಟೆಡ್
भारत हेवी इलेक्ट्रिकल्स लिमिटेड
Bharat Heavy Electricals Ltd.,
(A Government of India undertaking)
Electronics Division
PB 2606 , Mysore Road Bangalore , 560026 INDIA

SCPV: BOS: ITB - Rev 02

INSTRUCTIONS TO BIDDERS (ITB)

Bidders are requested to read the instructions carefully and submit their quotations covering all the points:

A. GENERAL INSTRUCTIONS:

1. Any Purchase Order resulting from this enquiry shall be governed by the Instructions to Bidders (document reference: SCPV: BOS: ITB – Rev 01), General Conditions of Contract (document reference: SCPV: BOS: GCC - Rev 01) and Special Conditions of Contract (document reference: SCPV: BOS: SCC: I - Rev 01/ SCPV: BOS: SCC: F - Rev 01), if any, of the enquiry.
2. Any deviations from or additions to the "General Conditions of Contract" or "Special Conditions of Contract" require BHEL's express written consent. The general terms of business or sale of the bidder shall not apply to this tender.
3. Bidders (also includes the term suppliers / contractors wherever used in this document) are instructed to quote their most competitive price and best delivery, etc. in the offer. Prices should be indicated in both figures & words. **(Please also refer clause 11 under section B)**
4. Regret letter (either through post or by mail) indicating reasons for not quoting must be submitted without fail, in case of non-participation in this tender. If a bidder fails to respond against 3 consecutive tenders for the same item, he will be liable for removal as a registered vendor of BHEL.
5. Procurement directly from the manufacturers shall be preferred. However, if the OEM / Principal insist on engaging the services of an agent, such agent shall not be allowed to represent more than one manufacturer / supplier in the same tender. Moreover, either the agent could bid on behalf of the manufacturer / supplier or the manufacturer / supplier could bid directly but not both. In case bids are received from the manufacturer / supplier and his agent, bid received from the agent shall be ignored.
6. Consultant / firm (and any of its affiliates) shall not be eligible to participate in the tender/s for the related goods for the same project if they were engaged for consultancy services for the same project.
7. If an Indian representative / associate / liaison office quotes on behalf of a foreign based bidder, such representative shall furnish compulsorily the following documents:
   a. Authorization letter to quote and negotiate on behalf of such foreign-based bidder.
   b. Undertaking from such foreign based bidder that such contract will be honored and executed according to agreed scope of supply and commercial terms and conditions.
   c. Undertaking shall be furnished by the Indian representative stating that the co-ordination and smooth execution of the contract and settlement of shortages / damages / replacement / repair of imported scope till system is commissioned and handed over to customer will be the sole responsibility of the Indian representative / associates / agent / liaison office.
8. In case of imported scope of supply, customs clearance & customs duty payment will be to BHEL account after the consignment is received at Indian Airport / Seaport. Bidders must provide all original documents required for completing the customs clearance along with the shipment. Warehousing charges due to incomplete or missing documentation will be recovered from the supplier's bill. All offers for imported scope of supply must be made from any of the gateway ports (within the country) indicated. **(Refer Annexure I)**
9. The offers of the bidders who are on the banned list and also the offers of the bidders, who engage the services of the banned firms, shall be rejected. The list of the banned firms is available on BHEL website: **www.bhel.com.**

10. Business dealings with bidders will be suspended if they are found to have indulged in any malpractices / misconduct which are contrary to business ethics like bribery, corruption, fraud, pilferage, cartel formation, submission of fake/false/forged documents, poor quality, certificates, information to BHEL or if they tamper with tendering procedure affecting the ordering process or fail to execute a contract, or rejection of 3 consecutive supplies or if their firms / works are under strike / lockout for a long period.

B. <u>GUIDELINES FOR PREPARATION OF OFFER:</u>

1. Quotation shall be submitted in Single Part Bid, Two Part Bid or Three Part Bid, as called for in the tender:
   - **SINGLE PART BID**: Technical and Commercial Bid with prices along with price summary & filled in BHEL Standard Commercial terms and conditions in a single sealed envelope.
   - **TWO PART BID**: Unpriced offer i.e. "Techno-commercial Bid" with filled in BHEL Standard Commercial terms and conditions in a sealed envelope **along with the copy of the "Price Bid" without the prices** should be enclosed in one cover and the cover must be super scribed **"Techno-commercial offer** and Priced offer i.e. "Price Bid" containing price summary in a separate sealed envelope and must be super scribed **"Price Bid"**. Both these envelopes shall be enclosed in a single sealed envelope super scribed with enquiry number, due date of tender and any other details as called for in the tender document.
   - **THREE PART BID**: Pre-qualification Bid (Part-I), Techno Commercial Bid with filled in BHEL Standard Commercial terms and conditions (Part-II), and Price Bid (Part-III). All three envelopes shall be enclosed in a single sealed envelope super scribed with enquiry number due date of tender and any other details as called for in the tender document.

   If any of the offers (Part I, Part II or Part III) are not submitted before the due date and time of submission at the venue/place specified or if any part of the offer is incomplete the entire offer of the bidder is liable for rejection.

2. Supplier shall ensure to super scribe each envelope with RFQ number, RFQ Date, RFQ Due date and time, Item Description and Project clearly & boldly. Also mention on the envelope whether it is "Techno Commercial Bid" or "Price Bid" or "Pre-Qualification Bid". Please ensure complete address, department name and purchase executive name is mentioned on the envelope (before dropping in the tender box or handing over) so that the tender is available in time for bid opening.
3. BHEL standard Commercial Terms and Conditions shall be duly filled, signed & stamped and must accompany Technical-Commercial offer without fail and should be submitted in original only. Photocopy will not be accepted. All documents submitted along with the offer shall be signed and stamped in each page by authorized representative of the bidder.
4. Any of the terms and conditions not acceptable to supplier, shall be explicitly mentioned in the Techno-Commercial Bid. If no deviations are brought out in the offer it will be treated as if all terms and conditions of this enquiry are accepted by the supplier without any deviation.
5. Deviation to this specification / item description, if any, shall be brought out clearly indicating "DEVIATION TO BHEL SPECIFICATION" without fail, as a part of Techno-Commercial Bid. If no deviations are brought out in the offer it will be treated as if the entire specification of this enquiry is accepted without deviation.
6. Suppliers shall submit one set of original catalogue, datasheets, bill of materials, dimensional drawings, mounting details and / or any other relevant documents called in purchase specification as part of Technical Bid.
7. "Price Bid" shall be complete in all respects containing price break-up of all components along with all applicable taxes and duties, packing & forwarding charges (if applicable), freight charges (if applicable) etc. Once submitted no modification / addition / deletion will be allowed in the "Price Bid." Bidders are advised to thoroughly check the unit price, total price to avoid any discrepancy.
8. In addition, bidder shall also quote for erection & commissioning charges (I&C charges), documentation charges, service charges, testing charges (type & routine), training charges, service tax, etc. wherever applicable. The price summary must indicate all the elements clearly.
9. Vendors should indicate "lump sum" charges (including To & Fro Fare, Boarding, Lodging, Local Conveyance etc.) for Supervision of Erection, Commissioning and handing over to customer. The quotation shall clearly indicate scope of work, likely duration of commissioning, pre-commissioning checklist and service tax (if any).
10. Wherever bidders require PAC (Project Authority Certificate) for import of raw materials, components required for Mega

Power Projects, Export Projects, MNRE Concession or other similar projects wherein supplies are eligible for customs duty /Excise duty benefits, lists and quantities of such items and their values (CIF) has to be mentioned in the offer. Prices must be quoted taking into account of such benefits.

11. All quotations shall be free from corrections /overwriting. Corrections if any should be authenticated with signature and seal. Any typographical error, totalling mistakes, currency mistake, multiplication mistake, summing mistakes etc. observed in the price bids will be evaluated as per **Annexure VI** "Guidelines for dealing with Discrepancy in Words & Figures – quoted in price bid". BHEL decision will be final.

C. <u>GUIDELINES FOR OFFER SUBMISSION:</u>

1. Offers / Quotations must be dropped in tender box before 13.00 Hrs. on or before due date mentioned in RFQ. The offers are to be dropped in the proper slot of the Tender Box kept in our reception area with caption "CE, SC&PV, DEFENCE." Tenders are opened on 3 days in a week (Monday/Wednesday/Friday). Tender must be deposited in the slot corresponding to the day (Monday - Box no.4/Wednesday - Box no. 6 /Friday - Box no.8) while depositing the offer. **(This clause will not be applicable for e-tenders).**

2. E-Mail / Internet / EDI offers received in time shall be considered only when such offers are complete in all respects. In case of offers received through E-mail, please send the offer to the email IDs within time of submission of tender.
3. In cases where tender documents are bulky, or due to some reasons tender documents are required to be submitted by hand or through posts/couriers, the offers are to be handed over to purchase officers.
4. Tenders will be opened on due date, time and venue as indicated in the RFQ in the presence of bidders at the venue indicated in the RFQ. In case of e-procurement, bidders can see tender results till seven days after due date and time.
5. Vendor will be solely responsible:
   a. For submission of offers before due date and time. Offers submitted after due date and time will be treated as "Late offers" and will be rejected.
   b. For submission of offers in the correct compartment of the tender box based on the day of due date (Monday/Wednesday/Friday). Please check before dropping your offer in the correct tender box.
   c. For depositing offers in proper sealed condition in the tender box. If the bidder drops the tender in the wrong tender box or if the tender document is handed over to the wrong person BHEL will not be responsible for any such delays.
   d. For offers received through email/courier etc., suppliers are fully responsible for lack of secrecy on information and ensuring timely receipt of such offers in the tender box before due date & time.
   e. In case of e-tender, all required documents should be uploaded before due date and time. Availability of power, internet connections, etc. will be the sole responsibility of the vendor. Wherever assistance is needed for submission of e-tenders, help line numbers and executives of service provider of BHEL may be contacted.
      Service provider: M-junction
      Website address: https://bheleps.buyjunction.in/
      Helpline no.: 033-66106426/6217/6013/6046/6176 (9:30 am to 5:30 pm)
      9163348283/9163348284/9163348285/9163348286/8584008116 (5:30 pm to 8:30 pm)

      Purchase Executive / BHEL will not be responsible for any of the activities relating to submission of offer.

D. <u>PROCESSING OFFERS RECEIVED:</u>

1. Any discount / revised offer submitted by the supplier on its own shall be accepted provided it is received on or before the due date and time of offer submission (i.e. Part-I bid). The discount shall be applied on pro-rata basis to all items unless specified otherwise by the bidder.
2. Changes in offers or Revised offers given after Part-I bid opening shall not be considered as a part of the original offer unless such changes / revisions are requested by BHEL.
3. In case there is no change in the technical scope and / or specifications and / or commercial terms & conditions by BHEL, the supplier will not be allowed to change any of their bids after Technical bids are opened (after the due date and time of tender opening of Part-1 Bid).

4. In case of changes in scope and/ or technical specifications and/ or commercial terms & conditions by BHEL and it accounts for price implications from vendors, all techno-commercially acceptable bidders shall be asked by BHEL (after freezing the scope, technical specifications and commercial terms & conditions) to submit the impact of such changes on their price bid. Impact price will be applicable only for changes in technical specification / commercial conditions by BHEL. The impact price must be submitted on or before the cut-off date specified by BHEL and the original price bid and the price impact bid will be opened together at the time of price bid opening. Impact price means only for those items which have been impacted by addition / deletion / changes in the technical specifications or commercial conditions. The impact may be +/- incremental value of the currency in which originally quoted. The impact price bid to be submitted on the cut-off date, time & venue as specified by BHEL. The impact price bid shall be opened along with original price bid.
5. Un-opened bids (including price bids) will be returned to the respective bidders after release of PO and receipt of order acknowledgement from the successful bidder.
6. After receipt of Purchase Order, supplier should submit required documents like drawings, bill of materials, datasheets, catalogues, quality plan, test procedure, type test report , O & M Manuals and / or any other relevant documents as per Specification / Purchase Order, as and when required by BHEL / Customer.
7. Any deviation to the terms and conditions not mentioned in the quotation by supplier in response to this enquiry will not be considered, if put forth subsequently or after issue of Purchase Order, unless clarification is sought for by BHEL EDN and agreed upon in the Purchase Order.
8. Evaluation shall be on the basis of delivered cost (i.e. "Total Cost to BHEL"). As per RFQ terms.
   "Total Cost to BHEL" shall include total basic cost, packing & forwarding charges, taxes and duties, inspection charges, freight charges, test charges, insurance, service tax for services, any other cost indicated by vendor for execution of the contract and loading factors (for non-compliance to BHEL Standard Commercial Terms & Conditions). Benefits arising out of Nil Import Duty on Mega Projects, Physical Imports or such 100% exemptions & MNRE Exemptions (statutory benefits), customer reimbursements of statutory duties (like Excise Duty, CST, VAT) will also be taken into account at the time of tender evaluation. (Wherever applicable and as indicated in SCC document of tender)
9. For evaluation of offers in foreign currency, the exchange rate (TT selling rate of SBI) shall be taken as under:

Single part bids:	Date of tender opening
Two/three part bids:	Date of Part-I bid opening
Reverse Auction:	Date of Part-I bid opening

   In case of Performance Bank Guarantee (PBG) also, exchange rate will be considered as mentioned above for converting foreign currency to Indian currency and vice versa.

   If the relevant day happens to be a bank holiday, then the exchange rate as on the previous working day of the bank (SBI) shall be taken.
10. Ranking (L-1, L-2 etc.) shall be done only for the techno-commercially acceptable offers and on the basis or evaluation of Total Cost to BHEL.

E. INFORMATION ON PAYMENT TERMS:

1. All payments will be through Electronic Fund transfer (EFT). Vendor has to furnish necessary details as per BHEL standard format **(Refer Annexure IV)** for receiving all payments through NEFT. (Applicable for Indian vendors only)
2. Statutory deductions, if any, will be made and the deduction certificate shall be issued. In case vendor does not provide PAN details, the TDS deduction shall be at the maximum percentage stipulated as per the provisions of Income Tax Act. (Applicable for Indian vendors only).Foreign vendors shall submit relevant details of their bankers like Swift Code, Banker's Name & Address etc.
3. Vendors must submit bills & invoices along with required supporting documents in time. Incomplete documentation / delayed submission of invoice / documents will result in corresponding delay in payment.

F. STANDARD PAYMENT TERMS OF BHEL-EDN

Purchase Orders for indigenous procurement

(a) SUPPLY WITH I&C/SUPERVISION:

Supply:

1) 80% of basic Supply value + 100% of taxes, duties and freight charges will be paid with 45 days credit from the receipt of material at site or 15 days credit from the date of submission of complete set of documentation whichever is later.
2) 10% of basic supply value will be paid on completion of I&C against submission of supplementary invoice along with proof of completion of I&C along with I&C charges (if any).
3) Balance 10% (retention money) against submission of supplementary invoice along with PBG valid for Warranty Period+3 months Claim Period from BHEL Consortium Bank.

I&C/Supervision*:* 100% on completion of I&C/Supervision and certification line item wise on pro-rata basis.

O&M: 100% O&M charges are payable as per RFQ terms against report certified by BHEL.

(b) SUPPLY ONLY:

1) 100% of Basic value with taxes, duties and freight will be paid with 45 days credit from the receipt of material at site or 15 days credit from the date of submission of complete set of documentation whichever is later)+ submission of PBG valid for Warranty Period+ 3 months Claim Period from BHEL Consortium Bank ,if applicable.

Purchase orders for import procurement:

(c) SUPPLY WITH I&C/SUPERVISION:

Supply:

1) 80% of the basic value (excluding I&C charges) will be paid with 45 days credit, against Sight draft, from the date of AWB/BOL on submission of complete set of documents as in PO.
2) 10% of basic supply value will be paid on completion of I&C against submission of supplementary invoice along with proof of completion of I&C along with I&C charges (if any).
3) Balance 10% (retention money) against submission of supplementary invoice along with PBG valid for Warranty Period+3 months Claim Period from BHEL Consortium Bank.

I&C: 100% on completion of I&C/Supervision and certification line item wise on pro-rata basis.

(d) SUPPLY ONLY:

1) 100% of PO value will be paid against Sight draft with 45 days Credit from the date of dispatch or 15 days credit from the date of submission of complete set of documents whichever is later)+ submission of PBG valid for Warranty Period+3 months Claim Period from BHEL Consortium Bank ,if applicable.

Note for (a), (b), (c) and (d): In exceptional cases, if vendor fails to submit PBG after supplies, vendors can also accept for the final 10% payment, payable after the warranty period + 3 months of claim period against supplementary invoice subject to the completion of commissioning (if applicable) as PBG is linked to Warranty period.

G. LOADING FACTORS FOR PAYMENT TERMS & DELAYED DELIVERY:

Loading factors as detailed below will be added to the quoted price (basic) to evaluate the lowest quote for non-compliance of BHEL standard commercial term.

Sl No	Deviation on	Nature of Deviation / Offered Terms	Loading %
1.	**Payment Terms**	**For Purchase within India :-**	
		1) Credit period less than 45 days	15
		*** For Foreign Purchase :-**	
		1) Payment through At Sight Letter of Credit	10
		2)Payment through Letter of Credit with usance credit of 45 days	5
		3) Sight Draft with credit period less than 45 days	5
2.	**Penalty for Delayed Delivery**	1) Non – Acceptance	10
		2) Partial Acceptance (X%)	(10 – X)

*** All bank charges shall be to seller's account. If bank charges of BHEL banker are to BHEL's account then additional loading of 2% on the quoted basic value is applicable.**

Offer/s with payment terms other than the standard payment terms indicated at Clause No. F or Deviated Payment Terms with loading indicated at Clause No. G above are liable for rejection.

NOTES:

1. ADVANCE PAYMENT/LC: Quotations with "Advance payment/Inland LC" shall be rejected.

2. Basic value of Purchase Order mentioned above will include all components of the purchase order and will exclude only taxes, duties, freight and I&C charges (wherever applicable).

3. Wherever the Purchase Order is split into import portion and indigenous portion of supply the retention money will be 10% (as applicable) of both purchase order values put together.

4. Non-Compliance of Warranty terms. Offers not complying with Warranty terms as per RFQ Terms is liable for rejection.

5. SALE IN TRANSIT/ LOCAL VAT: Sale in transit under section 6(2) of CST is allowed if movement of goods is interstate. In case intra state movement of goods, benefit of sale in transit is not available.

6. In case of intrastate movement i.e. supply within same state and VAT is applicable, the vendor shall furnish the respective BHEL's nodal agency TIN no. and address in their invoice. (Refer **Annexure IX**)

H. BANK GUARANTEE (BG) / PERFORMANCE BANK GUARANTEE (PBG):

1. Bank guarantee (BG) / Performance bank guarantee (PBG) will be applicable as called in the tender documents. Such PBG shall be valid for a period of Warranty Period + claim period of 3 months for a value equal to 10 % of the basic value of the purchase order. No deviation for the duration of PBG / BG will be permitted.
    a. PBG shall be from any of the BHEL consortium of bankers **(refer Annexure V)**.
    b. PBGs from nationalized banks are also acceptable.

c. PBG should be sent directly by the bank to the dealing executive mentioned in the purchase order located at the address mentioned in the purchase order. PBG should be in the format indicated. **(Refer Annexure III)**. No deviation to these formats will be allowed.

d. Confirmation from any of the BHEL consortium of banks or any of the Indian Public Sector Banks is essential for the acceptance of PBGs issued by foreign banks (located outside India).

e. Expired BGs / PBGs will be returned only after expiry of the claim period or on completion of the contractual obligation.

f. In case vendor does not accept for submission of PBG, the vendor is liable for rejection on commercial grounds.

I. DOCUMENTS (TRIPLICATE COPIES) REQUIRED AT THE TIME OF DISPATCH FOR PROCESSING OF BILL:

1. FOR INDIGENOUS SCOPE OF SUPPLY:

For Supply: Invoice in Triplicate, Lorry receipt (LR) copy, Packing List, PSI Call Letter Copy, Proof of delivery such as MRC (Material Receipt Certificate)/ original acknowledged LR, Insurance intimation Letter and Warranty Certificate. Note that document pertaining to Proof of delivery shall clearly mention number of boxes/panels etc which shall be in line with the Packing list.

For I&C: Supplementary Invoice in Triplicate with copy of I&C Certificate (Proof of Completion of I&C).

For PBG: Supplementary Invoice in Triplicate with copy of PBG. However, PBG should reach concerned Purchase Officer directly from the Bank.

2. FOR IMPORTED SCOPE OF SUPPLY:

For Supply: Invoice in Triplicate, Air Way Bill/Bill of Lading, Packing List, PSI Call Letter Copy, and Warranty Certificate.

For I&C: Supplementary Invoice in Triplicate with copy of I&C Certificate (Proof of Completion of I&C).

For PBG: Supplementary Invoice in Triplicate with copy of PBG. Both PBG & supplementary invoice should reach concerned Purchase Officer directly from the Bank.

J. PROVISONS APPLICABLE FOR MSE VENDORS (MICRO AND SMALL ENTERPRISES)

Vendors who qualify as MSE vendors are requested to submit applicable certificates (as specified by the Ministry of Micro, Small and Medium Enterprises) at the time of vendor registration. Vendors have to submit any of the following documents along with the tender documents in the Part I / Technical bid cover to avail the applicable benefits.

a. Valid NSIC certificate or

b. Entrepreneur's Memorandum part II (EM II) certificate (deemed valid for 2 years).

c. EM II certificate with CA certificate **(in the prescribed format given in Annexure VIII)** applicable for the year certifying that the investment in plant and machinery of the vendor is within permissible limits as per the MSME Act 2006 for relevant status where the deemed validity is over.

d. Documents submitted for establishing the credentials of MSE vendors must be valid as on the date of part I / technical bid opening for the vendors to be eligible for the benefits applicable for MSE vendors. Documents submitted after the Part I / Technical bid opening date will not be considered for this tender.

PURCHASE PREFERENCE FOR MSE VENDORS:

e. MSE vendors quoting within a price band of L1 + 15% shall be allowed to supply up to 20% of the requirement against this tender provided.

1. The MSE vendor matches the L1 price.
2. L1 price is from a non MSE vendor.
3. L1 price will be offered to the nearest vendor nearest to L1 in terms of price ranking (L2 - nearest to L1). In case of non-acceptance by the MSE vendor (L2) next ranking MSE vendor will be offered who is within the L1 + 15% band (if L3 is also within 15% band).
4. 20% of the 20% (i.e. 4% of the total enquired quantity) will be earmarked for SC/ST owned MSE firms provided conditions as mentioned in (1) and (2) are fulfilled.
5. In case no vendor under SC / ST category firms are meeting the conditions mentioned in (1) and (2) or have not participated in the tender, in such cases the 4% quantity will be distributed among the other eligible MSE vendors who have participated in the tender.

6. Serial no. 1 to 5 will not be applicable wherever it is not possible to split the tendered quantity / items on account of customer contract requirement, or the items tendered are systems. Such information that tendered quantity will not be split will be indicated in the SCC.

K. INTEGRITY COMMITMENT IN THE TENDER PROCESS, AND EXECUTION OF CONTRACTS:

1. Commitment by BHEL:

BHEL commits to take all measures necessary to prevent corruption in connection with the Tender process and execution of the Contract. BHEL will, during the tender process, treat all bidder / suppliers in a transparent and fair manner, and with equity.

2. Commitment by Bidder(s)/ Contractor(s):

a. The Bidder(s)/ Contractor(s) commit(s) to take all measures to prevent corruption and will not directly or indirectly try to influence any decision or benefit which he is not legally entitled to.
b. The Bidder(s)/ Contractor(s) will not enter with other Bidder(s) into any undisclosed agreement or understanding or any actions to restrict competition.
c. The Bidder(s)/ Contractor(s) will not commit any offence under the relevant Acts. The Bidder(s)/ Contractor(s) will not use improperly, for purposes of competition or personal gain or pass on to others, any information or document provided by BHEL as part of business relationship.
d. The Bidder(s)/ Contractor(s) will, when presenting his bid, disclose any and all payments he has made, and is committed to or intends to make to agents, brokers or any other intermediaries in connection with the award of the contract and shall adhere to the relevant guidelines issued from time to time by Government of India/ BHEL.

If the Bidder(s) / Contractor(s), before award or during execution of the Contract commit(s) a transgression of the above or in any other manner such as to put his reliability or credibility in question, BHEL is entitled to disqualify the Bidder(s) / Contractor (s) from the tender process or terminate the contract and/ or take suitable action as deemed fit.

L. FRAUD PREVENTION POLICY:

The bidder along with its associate/collaborators/sub-contractors/sub-vendors/consultants/service providers shall strictly adhere to BHEL Fraud Prevention Policy displayed on BHEL website http://www.bhel.com and shall immediately bring to the notice of BHEL Management about any fraud or suspected fraud as soon as it comes to their notice.
Fraud Prevention policy and List of Nodal Officers shall be hosted on BHEL website, vendor portals of Units/regions intranet.

PURCHASE EXECUTIVE

ಭಾರತ್ ಹೆವಿ ಎಲೆಕ್ಟ್ರಿಕಲ್ಸ್ ಲಿಮಿಟೆಡ್
भारत हेवी इलेक्ट्रिकल्स लिमिटेड
Bharat Heavy Electricals Ltd.,
(A Government of India undertaking)
Electronics Division
PB 2606 , Mysore Road Bangalore , 560026 INDIA

SCPV: BOS: GCC - Rev 02

GENERAL COMMERCIAL CONDITIONS FOR CONTRACT (GCC)

These 'General Commercial Conditions for Contract for Purchase' hereinafter referred to as GCC apply to all enquiries, tenders, requests for quotations, orders, contracts and agreements concerning the supply of goods and the rendering of related services (hereinafter referred to as "deliveries") to Bharat Heavy Electricals Limited and any of its units, regions or divisions (hereinafter referred to as "BHEL" or the Purchaser) or its projects / customers.

Any deviations from or additions to these GCC require BHEL's express written consent. The general terms of business or sale of the vendor shall not apply to BHEL. Acceptance, receipt of shipments or services or effecting payment shall not mean that the general terms of business or sale of the vendor have been accepted.

Orders, agreements and amendments thereto shall be binding if made or confirmed by BHEL in writing. Only the Purchasing department of BHEL is authorized to issue the Purchase Order or any amendment thereof.

Definitions: Throughout these conditions and in the specifications, the following terms shall have the meanings assigned to them, unless the subject matter or the context requires otherwise.

a) 'The Purchaser' means Bharat Heavy Electricals Limited, Electronics division, Mysore road, Bangalore 560 026, a Unit of Bharat Heavy Electricals Limited (A Govt. of India Undertaking) incorporated under the Companies Act having its registered office at BHEL House, Siri Fort, New Delhi-110049, India and shall be deemed to include its successors and assigns. It may also be referred to as BHEL.
b) 'The vendor' means the person, firm, company or organization on whom the Purchase Order is placed and shall be deemed to include the vendor's successors, representative heirs, executors and administrator as the case may be. It may also be referred to as Seller, Contractor or Supplier.
c) 'Contract' shall mean and include the Purchase Order incorporating various agreements, viz. tender/ RFQ, offer, letter of intent / acceptance / award, the General Conditions of Contract and Special Conditions of Contract for Purchase, Specifications, Inspection / Quality Plan, Schedule of Prices and Quantities, Drawings, if any enclosed or to be provided by BHEL or his authorized nominee and the samples or patterns if any to be provided under the provisions of the contract.
d) 'Parties to the Contract' shall mean the 'The Vendor' and the Purchaser as named in the main body of the Purchase Order.
e) "Bidder" shall mean duly established reputed organisation, manufacturer etc. having requisite financial and technical capability and experience of participating in the bid invited by the purchaser for the tender.
f) Bid- The term "bid" or "bidding" can also relate to the documented Offer submitted in response to a request for quotation (RFQ) /Tender.

Interpretation:

In the contract, except where the context requires otherwise:

a) words indicating one gender include all genders;
b) words indicating the singular also include the plural and words indicating the plural also include the singular;
c) provisions including the word "agree", "agreed" or "agreement" require the agreement to be recorded in writing, and
d) "Written" or "in writing" means hand-written, type-written, printed or electronically made, and resulting in a permanent record.

Applicable Conditions:

1. **Price Basis:** All prices shall be firm until the purchase order is executed / completed in all respects. No price variations / escalation shall be permitted unless otherwise such variations / escalations are provided for and agreed by BHEL in writing in the purchase order.

2. **Validity:** The offer will be valid for a period of 90 days from the date of technical bid opening date. Validity beyond 90 days, if required, will be specified in the SCC (special conditions of contract).

3. **Taxes & Duties:** Taxes as mentioned in the Contract Price or Price Schedule shall be paid to the Contractor subject to the Contractor complying with all the statutory requirements and furnishing the relevant documents including error free invoices containing detailed break-up of the taxes. Any duties, levies or taxes not mentioned in Contract Price or Price Schedule but applicable as per any statute(s) shall be deemed to be included in the Contract price and shall be to the account of the Contractor.
   The Contractor shall bear and pay all the costs, liabilities, levies, interest, penalties in respect of non-compliances of any legal requirements as per various statutory provisions. The contractor shall keep the owner indemnified at all times from any tax liability, interest, penalties or assessments that may be imposed by the statutory authorities for non-compliances or non-observation of any statutory requirements by the Contractor.

4. **Ordering and confirmation of Order:** Vendor shall send the order acceptance on their company letter head within two weeks from the date of Purchase Order or such other period as specified / agreed by BHEL. BHEL reserves the right to revoke the order placed if the order confirmation differs from the original order placed. The acceptance of goods/services/supplies by BHEL as well as payments made in this regard shall not imply acceptance of any deviations.
   The purchase order will be deemed to have been accepted if no communication to the contrary is received within two weeks (or the time limit as specified / agreed by BHEL) from the date of the purchase order.

5. **Documentation:** After receipt of Purchase Order, vendor should submit required documents like drawings, bill of materials, datasheets, catalogues, quality plan, test procedure, type test report , O & M Manuals and/or any other relevant documents as per Specification/Purchase Order, as and when required by BHEL/Customer.
   At any stage within the contract period, the vendor shall notify of any error, fault or other defect found in BHEL's documents /specifications or any other items for reference. If and to the extent that (taking account of cost and time) any vendor exercising due care would have discovered the error, fault or other defect when examining the documents/specifications before submitting the tender, the time for completion shall not be extended. However if errors, omissions, ambiguities, inconsistencies, inadequacies or other defects are found in the vendor's documents, they shall be corrected at his cost, notwithstanding any consent or approval.

6. **TERMS OF DELIVERY:**
   FOR IMPORTED PURCHASE:
   Price offered shall be for goods packed and delivered CIF Seaport/ International Airport (FCA) including packing, forwarding, Handling, Ancillary charges like processing of Sight Draft, negotiation charges of bank, Export declaration, Certificate of origin etc.
   Packing shall be Air/Sea worthy, best suitable for trans-shipment and to take care of transit damages. If containerized, no. of containers & size of container shall be mentioned. Packing weight (gross & net) Packing dimensions shall be given prior to shipment to ascertain whether the consignment can be carried on standard cargo in contract or as ODC.
   Wooden packing material for all the foreign consignments should be treated as per ISPM-15 & Fumigation / Phytosanitary certificate to be submitted to the freight forwarders/ BHEL along with the invoice, B/L, packing list etc.
   Vendors shall indicate the name of International Airport/Seaport. The consignment shall be handed over to BHEL approved freight forwarder as mentioned in PO.

FOR INDIGENOUS PURCHASE:

Equipment shall be delivered on "FOR SITE" basis, inclusive of freight, packing, insurance & forwarding charges.

Packing shall be Road / Rail / Air / Sea worthy, best suitable for transhipment and to take care of transit damages. Smaller consignments can be dispatched through Courier services/ RPP with the prior approval of the purchasing Executive.

Deviation for the delivery term is liable for rejection.

7. Penalty:

For delay in delivery: In the event of delay in agreed contractual delivery as per Purchase Order, penalty @ 0.5 % (half percent) per week or part thereof but limited to a max of 10% (ten percent) value of undelivered portion (basic material cost) will be applicable. Delivery will commence from the date of document approval by customer / BHEL or date of issue of manufacturing clearance, whichever is later. The date for which Inspection call is issued by vendor along with test certificates / test reports / Certificate of Conformance / calibration reports, as proof of completion of manufacturing will be treated as date of deemed delivery for penalty calculation. In the absence of furnishing such document indicated above as proof of completion of manufacturing along with inspection call, actual date of inspection will be considered as date of deemed delivery and BHEL will not be responsible for delay in actual date of inspection.

Penalty for delayed delivery, if applicable, shall be deducted at the time of first payment. If penalty is applicable for duration of less than a week, penalty @ 0.5% (half percent) of the basic material value will be deducted.

8. **Contract variations (Increase or decrease in the scope of supply):** BHEL may vary the contracted scope as per requirements at site. If vendor is of the opinion that the variation has an effect on the agreed price or delivery period, BHEL shall be informed of this immediately in writing along with technical details. Where unit rates are available in the Contract, the same shall be applied to such additional work. Vendor shall not perform additional work before BHEL has issued written instructions / amendment to the Purchase Order to that effect. The work which the vendor should have or could have anticipated in terms of delivering the service(s) and functionality (i.e.) as described in this agreement, or which is considered to be the result of an attributable error on the vendor's part, shall not be considered additional work.

9. **Reverse Auction:** BHEL reserves the right to go for Reverse Auction (RA) (Guidelines as available on www.bhel.com) instead of opening the sealed envelope price bid, submitted by the bidder. This will be decided after techno-commercial evaluation. Bidders to give their acceptance with the offer for participation in RA. Non-acceptance to participate in RA may result in non- consideration of their bids, in case BHEL decides to go for RA.

Those bidders who have given their acceptance to participate in Reverse Auction will have to necessarily submit 'Process compliance form' (to the designated service provider) as well as 'Online sealed bid' in the Reverse Auction. Non-submission of 'Process compliance form' or 'Online sealed bid' by the agreed bidder(s) will be considered as tampering of the tender process and will invite action by BHEL as per extant guidelines for suspension of business dealings with suppliers/ contractors (as available on www.bhel.com).

The bidders have to necessarily submit online sealed bid less than or equal to their envelope sealed price bid already submitted to BHEL along with the offer. The envelope sealed price bid of successful L1 bidder in RA, if conducted, shall also be opened after RA and the order will be placed on lower of the two bids (RA closing price & envelope sealed price) thus obtained. The bidder having submitted this offer specifically agrees to this condition and undertakes to execute the contract on thus awarded rates.

If it is found that L1 bidder has quoted higher in online sealed bid in comparison to envelope sealed bid for any item(s), the bidder will be issued a warning letter to this effect. However, if the same bidder again defaults on this count in any subsequent tender in the unit, it will be considered as fraud and will invite action by BHEL as per extant guidelines for suspension of business dealings with suppliers/ contractors (as available on www.bhel.com).

10. **Pre Shipment Inspection:** Prior written notice of at least one week shall be given along with internal test certificates / COC and applicable test certificates. Materials will be inspected by BHEL-EDN-QS/CQS or BHEL nominated Third Party Inspection Agency (TPIA) or BHEL authorized Inspection Agency or Customer / Consultant or jointly by BHEL & Customer / consultant. All tests have to be conducted as applicable in line with approved Quality plan or QA Checklist or Purchase specification and original reports shall be furnished to BHEL-EDN, Bangalore for verification / acceptance for issue of dispatch clearance.
    All costs related to inspections & re-inspections shall be borne by vendor. Whether the Contract provides for tests on the premises of the vendor or any of his Sub-contractor/s, vendor shall be responsible to provide such assistance, labour, materials, electricity, fuels, stores, apparatus, instruments as may be required and as may be reasonably demanded to carry out such tests efficiently. Cost of any type test or such other special tests shall be borne by BHEL only if specifically agreed to in the purchase order.

11. **Transit Insurance:** Transit insurance coverage between vendor's works and project site shall be to the account of BHEL, unless specifically agreed otherwise. However, vendor shall send intimation directly to insurance agency through fax/courier/e-mail, immediately on dispatch of goods for covering insurance. A copy of such intimation sent by vendor to insurance agency shall be given to BHEL along with dispatch documents. Dispatch documents will be treated as incomplete without such intimation copy. BHEL shall not be responsible for sending intimations to insurance agency on behalf of the vendor.

12. **Packaging and dispatch:** The Seller shall package the goods safely and carefully and pack them suitably in all respects considering the peculiarity of the material for normal safe transport by Sea / Air / Rail / Road to its destination suitably protected against loss, damage, corrosion in transit and the effect of tropical salt laden atmosphere. The packages shall be provided with fixtures / hooks and sling marks as may be required for easy and safe handling. If any consignment needs special handling instruction, the same shall be clearly marked with standard symbols / instructions. Hazardous material should be notified as such and their packing, transportation and other protection must conform to relevant regulations.
    The packing, shipping, storage and processing of the goods must comply with the prevailing legislation and regulations concerning safety, the environment and working conditions. Any Imported/Physical Exports items packed with raw / solid wood packing material should be treated as per ISPM – 15 (fumigation) and accompanied by Phytosanitory / Fumigation certificate. If safety information sheets (MSDS – Material Safety Data Sheet) exist for an item or the packaging, vendor must provide this information without fail along with the consignment.
    Each package must be marked with Consignee name, Purchase order number, Package number, Gross weight and net weight, dimensions (L x B x H) and Seller's name. Packing list of goods inside each package with PO item number and quantity must also be fixed securely outside the box to indicate the contents of each box. Total number of packages in the consignment must also be indicated.
    Separate packing & identification of items should be as follows.
    1. Main Scope - All items must be tagged with part no. & item description.
    2. Commissioning spares - All items must be tagged with part no. & item description.
    3. Mandatory spares - All items must be tagged with part no. & item description.

13. **Assignment of Rights & Obligations; Subcontracting:** Vendor is not permitted to subcontract the delivery or any part thereof to third party or to assign the rights and obligations resulting from this agreement in whole or in part to third parties without prior written permission from BHEL. Any permission or approval given by the BHEL shall, however, not absolve the vendor of the responsibility of his obligations under the Contract.

14. **Progress report:** Vendor shall render such report as to the progress of work and in such form as may be called for by the concerned purchase officer from time to time. The submission and acceptance of such reports shall not prejudice the rights of BHEL in any manner.

15. **Non-disclosure and Information Obligations: Vendor** shall provide with all necessary information pertaining to the goods as it could be of importance to BHEL. Vendor shall not reveal confidential information that may be divulged by BHEL to Vendor's employees not involved with the tender/ contract & its execution and delivery or to third parties, unless BHEL has agreed to this in writing beforehand. Vendor shall not be entitled to use the BHEL name in advertisements and other commercial publications without prior written permission from BHEL.

16. **Cancellation / Termination of contract:** BHEL shall have the right to completely or partially terminate the agreement by means of written notice to that effect. Termination of the Contract, for whatever reason, shall be without prejudice to the rights of the parties accrued under the Contract up to the time of termination.
    BHEL shall have the right to cancel/foreclose the Order/ Contract, wholly or in part, in case it is constrained to do so, on account of any decline, diminution, curtailment or stoppage of the business.

17. **Risk Purchase Clause:** In case of failure of supplier, BHEL at its discretion may make purchase of the materials / services NOT supplied / rendered in time at the RISK & COST of the supplier. Under such situation, the supplier who fails to supply the goods in time shall be wholly liable to make good to BHEL any loss due to risk purchase.
    In case of items demanding services at site like erection and commissioning, vendor should send his servicemen /representatives within 7 days from the service call. In case a vendor fails to attend to the service call, BHEL at its discretion may also make arrangements to attend such service by other parties at the **RISK & COST** of the supplier. Under such situation the supplier who fails to attend the service shall be wholly liable to make good to BHEL any loss due to risk purchase / service including additional handling charges due to the change.

18. **Shortages:** In the event of shortage on receipt of goods and/or on opening of packages at site, all such shortages shall be made good within a reasonable time that BHEL may allow from such intimation and free of cost.
    Transit Damages: In the event of receipt of goods in damaged condition or having found them so upon opening of packages at site, Supplier shall make good of all such damages within a reasonable time from such intimation by BHEL.

19. **Remedial work:** Notwithstanding any previous test or certification, BHEL may instruct the vendor to remove and replace materials/goods or remove and re-execute works/services which are not in accordance with the purchase order. Similarly BHEL may ask the vendor to supply materials or to execute any services which are urgently required for any safety reasons, whether arising out of or because of an accident, unforeseeable event or otherwise. In such an event, Vendor shall provide such services within a reasonable time as specified by BHEL.

20. **Indemnity Clause:** Vendor shall comply with all applicable safety regulations and take care for the safety of all persons involved. Vendor is fully responsible for the safety of its personnel or that of his subcontractor's men / property, during execution of the Purchase Order and related services. All statutory payments including PF, ESI or other related charges have to be borne by the vendor. Vendor is fully responsible for ensuring that all legal compliances are followed in course of such employment.

21. **Product Information, Drawings and Documents:** Drawings, technical documents or other technical information received by Vendor from BHEL or vice versa shall not, without the consent of the other party, be used for any other purpose than that for which they were provided. They may not, without the consent of the Disclosing party, otherwise be used or copied, reproduced, transmitted or communicated to third parties. All information and data contained in general product documentation, whether in electronic or any other form, are binding only to the extent that they are by reference expressly included in the contract.
    Vendor, as per agreed date/s but not later than the date of delivery, provide free of charge information and drawings which are necessary to permit and enable BHEL to erect, commission, operate and maintain the product. Such information and drawings shall be supplied in as many numbers of copies as may be agreed upon.
    All intellectual properties, including designs, drawings and product information etc. exchanged during the

formation and execution of the Contract shall continue to be the property of the disclosing party.

22. **Intellectual Property Rights, Licenses:** If any Patent, design, Trade mark or any other intellectual property rights apply to the delivery (goods / related service) or accompanying documentation shall be the exclusive property of the Vendor and BHEL shall be entitled to the legal use thereof free of charge by means of a non-exclusive, worldwide, perpetual license. All intellectual property rights that arise during the execution of the Purchase Order/ contract for delivery by vendor and/or by its employees or third parties involved by the vendor for performance of the agreement shall belong to BHEL. Vendor shall perform everything necessary to obtain or establish the above mentioned rights. The Vendor guarantees that the delivery does not infringe on any of the intellectual property rights of third parties. The Vendor shall do everything necessary to obtain or establish the alternate acceptable arrangement pending resolution of any (alleged) claims by third parties. The Vendor shall indemnify BHEL against any (alleged) claims by third parties in this regard and shall reimburse BHEL for any damages suffered as a result thereof.

23. **Force Majeure:** Notwithstanding anything contained in the purchase order or any other document relevant thereto, neither party shall be liable for any failure or delay in performance to the extent said failures or delays are caused by the "Act of God" and occurring without its fault or negligence, provided that, force majeure will apply only if the failure to perform could not be avoided by the exercise of due care and vendor doing everything reasonably possible to resume its performance.
A party affected by an event of force majeure which may include fire, tempest, floods, earthquake, riot, war, damage by aircraft etc., shall give the other party written notice, with full details as soon as possible and in any event not later than seven (7) calendar days of the occurrence of the cause relied upon. If force majeure applies, dates by which performance obligations are scheduled to be met will be extended for a period of time equal to the time lost due to any delay so caused.

    Notwithstanding above provisions, in an event of Force Majeure, BHEL reserves for itself the right to cancel the order/ contract, wholly or partly, in order to meet the overall project schedule and make alternative arrangements for completion of deliveries and other schedules.

24. **Guarantee / Warranty:** Wherever required, and so provided in the specifications / Purchaser Order, the Seller shall guarantee that the stores supplied shall comply with the specifications laid down, for materials, workmanship and performance. The guarantee / warranty period as described shall apply afresh to replaced, repaired or re-executed parts of a delivery. If the vendor fails to take proper corrective action to repair/replace defects satisfactorily within a reasonable period, Purchaser shall be free to take corrective action as may be deemed necessary at vendor's risk and cost after giving notice to the vendor, including arranging supply of goods from elsewhere at the sole risk and cost of the vendor. Unless otherwise specifically provided in the Purchase Order, Vendor's liability shall be co terminus with the expiration of the applicable guarantee / warranty period.

25. **Limitation of Liability:** Vendor's liability towards this contract is limited to a maximum of 100% of the contract value and consequential damages are excluded. However the limits of liability will have no effect in cases of criminal negligence or wilful misconduct.
The total liability of Vendor for all claims arising out of or relating to the performance or breach of the Contract or use of any Products or Services or any order shall not exceed the total Contract price.

26. **Liability during guarantee / warranty:** Vendor shall arrange replacement / repair of all the defective materials / services under its obligation under the guarantee / warranty period. The rejected goods shall be taken away by vendor and replaced / repaired. In the event of the vendor's failure to comply, BHEL may take appropriate action including disposal of rejections and replenishment by any other sources at the cost and risk of the vendor.
In case, defects attributable to vendor are detected during first time commissioning or use, vendor shall be responsible for replacement / repair of the goods as required by BHEL at vendor's cost. In all such cases expiry of guarantee / warranty will not be applicable.

27. **Liability after guarantee / warranty period:** At the end of the guarantee / warranty, the Vendor's liability ceases except for latent defects (latent defects are defects / performance issues notices after the

guarantee / warranty has expired). The Contractor's liability for latent defects warranty for the plant and equipment including spares shall be limited to a period of six months from the end of the guarantee / as specified in RFQ.

28. **Compliance with Laws:** Vendor shall, in performing the contract, comply with all applicable laws. The vendor shall make all remittances, give all notices, pay all taxes, duties and fees, and obtain all permits, licences and approvals, as required by the laws in relation to the execution and completion of the contract and for remedying of any defects; and the Contractor shall indemnify and hold BHEL harmless against and from the consequences of any failure to do so.

29. **Settlement of Disputes:** Except as otherwise specifically provided in the Purchase Order, decision of BHEL shall be binding on the vendor with respect to all questions relating to the interpretation or meaning of the terms and conditions and instructions herein before mentioned and as to the completion of supplies/work/services, other questions, claim, right, matter or things whatsoever in any way arising out of or relating to the contract, instructions, orders or these conditions or otherwise concerning the supply or the execution or failure to execute the order, whether arising during the schedule of supply/work or after the completion or abandonment thereof. Any disputes or differences among the parties shall to the extent possible be settled amicably between the parties thereto, failing which the disputed issues shall be settled through arbitration. Vendor shall continue to perform the contract, pending settlement of dispute(s).

30. **Arbitration Clause:** In case amicable settlement is not reached in the event of any dispute or difference arising out of the execution of the Contract or the respective rights and liabilities of the parties or in relation to interpretation of any provision in any manner touching upon the Contract, such dispute or difference shall (except as to any matters, the decision of which is specifically provided for therein) be referred by either party to the sole arbitration of an Arbitrator appointed by the Executive Director/ General Manager of the purchasing unit/ region/ division of BHEL. Vendor shall have no objection even if the Arbitrator so appointed is an employee of BHEL or has ever dealt/ had to deal with any matter relating to this Contract.
    Subject as aforesaid the provisions of the Arbitration and Conciliation Act, 1996 of India or any statutory modification or re-enactment thereof and the rules made there under and for the time being in force shall apply to the arbitration proceedings under this clause. It is a term of contract that the party initiating arbitration shall specify the dispute or disputes to be referred to arbitration under this clause together with the amount or amounts claimed in respect of each such dispute. The venue for the arbitration shall be Bangalore, India. The award of the arbitrator shall be a speaking award and shall be final, conclusive and binding on all parties to this contract.
    The cost of arbitration shall be borne equally by the parties. Notwithstanding the existence of any dispute or difference or any reference for the arbitration, the vendor shall proceed with and continue without hindrance the performance of the work under the contract with due diligence and expedition in a professional manner.

31. **Applicable Laws and Jurisdiction of Courts:** Prevailing Indian laws both substantive and procedural, including modifications thereto, shall govern the Contract. Subject to the conditions as aforesaid, the competent courts in BANGALORE alone shall have jurisdiction to consider over any matters touching upon this contract.

32. **General Terms:** That any non-exercise, forbearance or omission of any of the powers conferred on BHEL and /or any of its authorities will not in any manner constitute waiver of the conditions hereto contained in these presents.
    That the headings used in this agreement are for convenience of reference only.
    That all notices etc., to be given under the Purchase order shall be in writing, type script or printed and if sent by registered post or by courier service to the address given in this document shall be deemed to have been served on the date when in the ordinary course, they would have been delivered to the addressee.

33. Vendors shall provide their state wise list of GSTIN number as per Govt of India Statute.

34. If the vendor is below the threshold limit, viz Rs.20. lacs as per existing provisions, then a declaration to be provided to that effect along with copy of accounts, failing which the supplier will be treated as an Unregistered dealer (URD) for which tax is payable on reverse charge (RCM) by BHEL.
35. If the vendor is above the threshold limit & is yet not registered, GST is payable by BHEL on reverse charge basis.
36. All supply items are linked to HSN code (Harmonised System Nomenclature). This goods list is mapped with HSN code which is released by Govt of India & available in public domain. All registered suppliers submitting the quote shall mandatorily mention HSN code relevant for the goods quoted.
37. Under GST, Govt of India has linked every service to a service accounting code called SAC. The list of services and the corresponding service accounting code (SAC) is released by Govt of India & available in public domain. All registered suppliers submitting the quote shall mandatorily mention SAC code relevant for the service quoted.
38. The rate of tax applicable for 35 services is also released by Government and rate for any service not falling in the list of 35 services is 18% .
39. Invoice should contain all particulars as per invoice Rules and should include the GST registration number (GSTIN) , service accounting code (SAC) apart from all other details mentioned.
40. Invoice should contain all particulars as per invoice Rules and should include the GST registration number (GSTIN) , HSN code apart from all other details mentioned.
41. In case GST is payable on reverse charge (RCM) invoice should mention that tax is payable on reverse charge
42. For a registered supplier, the supplier uploaded sales data for the month will be available to recipient on 11th of the subsequent month & details can be verified by BHEL. Credit availment can be confirmed based on this verified data
43. If the Supplier is not registered, then tax is payable on Reverse charge & will be to the account of the supplier
44. All services in the course of business or furtherance of business are eligible to credit subject to other compliances listed herein.
45. If service is eligible for credit, then the credit can be availed only if the invoice is as per the prescribed format, the supplier has uploaded the invoice in the GSTN portal, paid the taxes & uploaded the return, and matches with our inward data, failing which any availment of credit attracts interest.
46. Even in case of services where credit is not eligible,

    (i) either the supplier should have registered (if above threshold limit) & comply with all above statutory provisions relating to invoice, tax remittance, return filing etc. This can be verified by BHEL from the GSTN portal OR
    (ii) if not registered BHEL shall be liable to pay applicable taxes on reverse charge

47. For any deficiency in services, where a recovery is made / adjusted in supplier bills, the supplier has to raise a credit note on BHEL & upload in GSTN portal. All above rules applicable for invoice also apply for credit note.
48. All notifications and rules as per central board of excise and customs will be applicable.

ANNEXURE - I

LIST OF INTERNATIONAL GATEWAY AIRPORTS

SCHEDULE NO	COUNTRY	CURRENCY CODE	AIRPORT
D01	UK	GBP	LONDON (HEATHROW)
D02	UK	GBP	NEW CASTLE
D03	UK	GBP	OXFORD. CHETLAM
D04	UK	GBP	BRISTOL. WELLINGBOROUGH
D05	UK	GBP	BIRMINGHAM
DO6	UK	GBP	EAST MIDLANDS
D07	UK	GBP	MANCHESTER
D08	UK	GBP	LEEDS
D09	UK	GBP	GLASGOW
D10	FRANCE	EURO	PARIS (ROISSY) & LYON
D11	SWEDEN	EURO	STOCKHOLM
D12	SWEDEN	EURO	GOTHENBERG & MALMO
D13	ITALY	EURO	ROMA, MILAN
D14	ITALY	EURO	TURIN, BOLOGNA, FLORENCE
D15	NETHERLANDS	EURO	AMSTERDAM, ROTTERDAM
D16	AUSTRIA	EURO	VIENNA, LINZ, GRAZ
D17	BELGIUM	EURO	ANTWERP, BRUSSELS
D18	DENMARK	DKK	COPENHAGEN
D19	JAPAN	JPY	TOKYO, OSAKA
D20	SINGAPORE	SGD	SINGAPORE
D21	CANADA	CAD	TORONTO
D22	CANADA	CAD	MONTREAL
D23	USA	USD	NEW YORK, BOSTON
D24	USA	USD	CHICAGO
D25	USA	USD	SAN FRANCISCO, LOS ANGELES
D26	USA	USD	ALANTA, HOUSTON
D27	GERMANY	EURO	MUNICH, KOLN, DUSSELDORF, HANNOVER, HAMBURG, STUTTGART, DAMSTADT, MANIHIEM, NURUMBERG
D28	GERMANY	EURO	FRANKFURT
D29	GERMANY	EURO	BERLIN
D30	SWITZERLAND	SFR	BASLE, ZURICH, GENEVA
D31	SPAIN	EURO	BARCELONA
D32	AUSTRALIA	AUD	SYDNEY
D33	AUSTRALIA	AUD	MELBOURNE
D34	AUSTRALIA	AUD	PERTH
D35	CZECH	EURO	PRAGUE
D36	HONG KONG	HKD	HONG KONG
D37	NEW ZELAND	NZD	AUCKLAND
D38	RUSSIA	USD	MOSCOW
D39	SOUTH KOREA	USD	KIMPO INTERNATIONAL, INCHEON
D40	FINLAND	EURO	HELSINKI
D41	ROMANIA	EURO	BUCHAREST
D42	NORWAY	EURO	OSLO
D43	IRELAND	EURO	DUBLIN
D44	ISRAEL	USD	TEL AVIV
D45	UAE	USD	DUBAI
D46	OMAN	USD	MUSCAT
D47	EGYPT	USD	CAIRO
D48	TAIWAN	USD	TAIPEI
D49	UKRAINE	USD	KIEV
D50	CHINA	USD	SHANGHAI, SHENZHEN
D51	PHILIPINES	USD	MANILA
D52	MALAYSIA	USD	KUALALUMPUR, PE NANG
D53	CYPRUS	USD	LARNACA
D54	SOUTH AFRICA	USD	JOHANNESBERG, DURBAN
D55	SLOVAKIA	EURO	BARTISLOVA
D56	SAUDI ARABIA	SAR	RIYADH
D57	TURKEY	EURO	ISTANBUL
D58	THAILAND	USD	BANGKOK
D59	BRAZIL	USD	SAO PAULO, RIO DE JANEIRO

ANNEXURE - II

REQUEST FOR C FORM

NAME OF VENDOR :

VENDOR CODE ALLOTED BY BHEL :

E mail id for c form correspondence :

BHEL PO NO	INVOICE NO	INVOICE DATE	INVOICE AMOUNT	SUPPLY FROM - STATE	SUPPLY TO - STATE	CST TIN NUMBER (SUPPLIER)	INVOICE AMOUNT EXCLUDING FREIGHT	C FORM QTR	YEAR	SUPPLY TO BHEL EDN / SITE

Please note that one 'C' form will be issued for a quarter.

Any modification and cancellation of c form is not possible from our end since it is generated online therefore include all invoices pertaining to quarter in your request
Also check the data are correct in all respect

General Instruction:
1. C form request should be given only in this file.
2. Amount should be 100% of Invoice value but should Not include freight, Insurance etc.
3. PO No. should be numeric, starting with 4 and has 10 digits
4. For every quarter separate file to be provided
5. All Invoices pertaining to the relevant quarter to be included.
6. No corrections will be entertained once c-form is issued.

ANNEXURE-III

BANK GUARANTEE FOR PERFORMANCE SECURITY

Bank Guarantee No:

Date:

To

NAME

& ADDRESSES OF THE BENEFICIARY

Dear Sirs,

In consideration of the Bharat Heavy Electricals Limited [1] (hereinafter referred to as the 'Employer' which expression shall unless repugnant to the context or meaning thereof, include its successors and permitted assigns) incorporated under the Companies Act, 1956 and having its registered office at _____ through its Unit at……..(name of the Unit) having awarded to (Name of the Vendor / Contractor / Supplier) having its registered office at_____[2] hereinafter referred to as the 'Contractor/Supplier', which expression shall unless repugnant to the context or meaning thereof, include its successors and permitted assigns), a contract Ref No……dated ……[3] valued at Rs……[4] (Rupees ----------)/FC……(in words……..) for ……[5] (hereinafter called the 'Contract') and the Contractor having agreed to provide a Contract Performance Guarantee, equivalent to ……% (…. Percent) of the said value of the Contract to the Employer for the faithful performance of the Contract,

we, ……, (hereinafter referred to as the Bank), having registered/Head office at ……. and inter alia a branch at …… being the Guarantor under this Guarantee, hereby, irrevocably and unconditionally undertake to forthwith and immediately pay to the Employer a maximum amount Rs ---------- (Rupees ----------) without any demur, immediately on a demand from the Employer, .
Any such demand made on the Bank shall be conclusive as regards the amount due and payable by the Bank under this guarantee. However, our liability under this guarantee shall be restricted to an amount not exceeding Rs. _____ _____.

We undertake to pay to the Employer any money so demanded notwithstanding any dispute or disputes raised by the Contractor/ Supplier in any suit or proceeding pending before any Court or Tribunal relating thereto our liability under this present being absolute and unequivocal.

The payment so made by us under this Guarantee shall be a valid discharge of our liability for payment thereunder and the contractors/supplier shall have no claim against us for making such payment.

We the ……bank further agree that the guarantee herein contained shall remain in full force and effect during the period that would be taken for the performance of the said Contract and that it shall continue to be enforceable till all the dues of the Employer under or by virtue of the said Contract have been fully paid and its claims satisfied or discharged.

We …….. BANK further agree with the Employer that the Employer shall have the fullest liberty without our consent and without affecting in any manner our obligations hereunder to vary any of the terms and conditions of the said Contract or to extend time of performance by the said Contractor/Supplier from time to time or to postpone for any time or from time to time any of the powers exercisable by the Employer against the said Contractor/Supplier and to forbear or enforce any of the terms and conditions relating to the said Agreement and we shall not be relieved from our liability by reason of any such variation, or extension being granted to the said Contractor/Supplier or for any forbearance, act or omission on the part of the Employer or any indulgence by the Employer to the said Contractor/Supplier or by any such matter or thing whatsoever which under the law relating to sureties would but for this provision have effect of so relieving us.

The Bank also agrees that the Employer at its option shall be entitled to enforce this Guarantee against the Bank as a principal debtor, in the first instance without proceeding against the Contractor and notwithstanding any security or other guarantee that the Employer may have in relation to the Contractor's liabilities.

This Guarantee shall remain in force upto and including…….. [6] and shall be extended from time to time for such period as may be desired by Employer.
This Guarantee shall not be determined or affected by liquidation or winding up, dissolution or change of constitution or insolvency of the Contractor/Supplier but shall in all respects and for all purposes be binding and operative until payment of all money payable to the Employer in terms thereof.

Unless a demand or claim under this guarantee is made on us in writing on or before the ……[7]we shall be discharged from all liabilities under this guarantee thereafter.

We, …… BANK lastly undertake not to revoke this guarantee during its currency except with the previous consent of the Employer in writing.
Notwithstanding anything to the contrary contained hereinabove:

a) The liability of the Bank under this Guarantee shall not exceed…… [8]
b) This Guarantee shall be valid up to ……[9]
c) Unless the Bank is served a written claim or demand on or before _____[10] all rights under this guarantee shall be forfeited and the Bank shall be relieved and discharged from all liabilities under this guarantee irrespective of whether or not the original bank guarantee is returned to the Bank.

We, _____ Bank, have power to issue this Guarantee under law and the undersigned as a duly authorized person has full powers to sign this Guarantee on behalf of the Bank.

For and on behalf of
(Name of the Bank)

Dated…….
Place of Issue…….

[1] *NAME AND ADDRESS OF EMPLOYER I.e Bharat Heavy Electricals Limited*

[2] *NAME AND ADDRESS OF THE VENDOR /CONTRACTOR / SUPPLIER.*

[3] *DETAILS ABOUT THE NOTICE OF AWARD/CONTRACT REFERENCE*

[4] *PROJECT/SUPPLY DETAILS*

[5] *BG AMOUNT IN FIGURES AND WORDS*

[6] *VALIDITY DATE*

[7] *DATE OF EXPIRY OF CLAIM PERIOD*

[8] *BG AMOUNT IN FIGURES AND WORDS.*

[9] *VALIDITY DATE*

[10] *DATE OF EXPIRY OF CLAIM PERIOD*

Note:

1. **In Case of Bank Guarantees submitted by Foreign Vendors-**

   a. **From Nationalized/Public Sector / Private Sector/ Foreign Banks (BG issued by Branches in India)** can be accepted subject to the condition that the Bank Guarantee should be enforceable in the town/city or at nearest branch where the Unit is located i.e. Demand can be presented at the Branch located in the town/city or at nearest branch where the Unit is located.

   b. **From Foreign Banks (wherein Foreign Vendors intend to provide BG from local branch of the Vendor country's Bank)**

   b.1 In such cases, in the Tender Enquiry/ Contract itself, it may be clearly specified that Bank Guarantee issued by **any of the Consortium Banks only** will be accepted by BHEL. As such, Foreign Vendor needs to make necessary arrangements for issuance of Counter- Guarantee by Foreign Bank in favour of the Indian Bank (BHEL's Consortium Bank). It is advisable that all charges for issuance of Bank Guarantee/ counter- Guarantee should be borne by the Foreign Vendor. The tender stipulation should clearly specify these requirements.

   b.2 **In case, Foreign Vendors intend to provide BG from** Overseas Branch of our Consortium Bank (e.g. if a BG is to be issued by SBI Frankfurt), the same is acceptable. However, the procedure at **sl.no. b.1** will required to be followed.

   b.3 The BG issued may preferably be subject to Uniform Rules for Demand Guarantees (URDG) 758 (as amended from time to time). In case, of Foreign Vendors, the BG Format provided to them should clearly specify the same.

   b.4 The BG should clearly specify that the demand or other document can be presented in electronic form.

ANNEXURE - IV

Electronic Funds Transfer (EFT) OR
Paylink Direct Credit Form

Please Fill up the form in **CAPITAL LETTERS** only.
TYPE OF REQUEST(Tick one): _____ CREATE _____ CHANGE

BHEL Vendor / Supplier Code:
Company Name :
Permanent Account Number(PAN):
Address

City: _____ PINCODE _____ STATE _____

Contact Person(s)
Telephone No:
Fax No:
e-mail id:

1 Bank Name:
2 Bank Address:
3 Bank Telephone No:
4 Bank Account No:
5 Account Type: Savings/Cash Credit
6 9 Digit Code Number of Bank and branch appearing on MICR cheque issued by Bank
7 Bank swift Code(applicable for EFT only)
8 Bank IFSC code(applicable for RTGS)
9 Bank IFSC code(applicable for NEFT)

A I hereby certify that the particulars given above are true, correct and complete and that I, as a representative for the above named Company, hereby authorise BHEL, EDN, Bangalore to electronically deposit payments to the designated bank account.

B If the transaction is delayed or not effected at all for reasons of incomplete or incorrect information, I would not hold BHEL / transfering Bank responsible.

C This authority remains in full force until BHEL, EDN,Bangalore receives written notification requesting a change or cancellation.

D I have read the contents of the covering letter and agree to discharge the resposibility expected of me as a participant under ECS / EFT.

Date:

Authorised Signatory:
Designation: Telephone NO. with STD Code

Company Seal

Bank Certificate

We certify that_____has an Account No_____ with us and we confirm that the bank details given above are correct as per our records.

Date: (……..)
Place: Signature

Please return completed form along with a blank cancelled cheque or photocopy thereof to:
Bharath Heavy Electricals Ltd,
Attn:
Electronics Division, Mysore Road,
BANGALORE - 560 026
In case of any Querry, please call : 080-26998xxx / 2674xxxx or fax no. 080-2674xxxx

ANNEXURE-V

BHEL MEMBER BANKS (LIST OF CONSORTIUM BANKS)

BANK GUARANTEE (BG) SHALL BE ISSUED FROM THE FOLLOWING BANKS ONLY:

	Nationalised Banks		**Nationalised Banks**
1	Allahabad Bank	19	Vijaya Bank
2	Andhra Bank		**Public Sector Banks**
3	Bank of Baroda	20	IDBI
4	Canara Bank		**Foreign Banks**
5	Corporation Bank	21	CITI Bank N.A
6	Central Bank	22	Deutsche Bank AG
7	Indian Bank	23	The Hongkong and Shanghai Banking Corporation Ltd. (HSBC)
8	Indian Overseas Bank	24	Standard Chartered Bank
9	Oriental Bank of Commerce		
10	Punjab National Bank	26	J P Morgan
11	Punjab & Sindh Bank		**Private Banks**
12	State Bank of India	27	Axis Bank
13	State Bank of Hyderabad	28	The Federal Bank Limited
14	Syndicate Bank	29	HDFC Bank
15	State Bank of Travancore	30	Kotak Mahindra Bank Ltd
16	UCO Bank	31	ICICI Bank
17	Union Bank of India	32	IndusInd Bank
18	United Bank of India	33	Yes Bank

Note:

- All BGs must be issued from BHEL consortium banks listed above.
- BHEL may accept BG from other Nationalised Banks also which are not listed above.
- BG will not be accepted from Scheduled Banks and Co-operative Banks.
- In case BG is issued from a bank located outside Indian territory and is issued in foreign currency, the BG must be routed through and confirmed by any one of the above mentioned consortium banks or any of the Indian Public Sector Banks.
- This list is subject to changes. Hence vendors are requested to check this list every time before issuing BGs.

ANNEXURE - VI

DISCREPANCY IN WORDS & FIGURES – QUOTED IN PRICE BID

Following guidelines will be followed in case of discrepancy in words & figures-quoted in price bid:

(a) If, in the price structure quoted for the required goods/services/works, there is discrepancybetween the unit price and the total price (which is obtained by multiplying the unit price by thequantity), the unit price shall prevail and the total price corrected accordingly, unless in theopinion of the purchaser there is an obvious misplacement of the decimal point in the unit price,in which case the total price as quoted shall govern and the unit price corrected accordingly.

(b) If there is an error in a total corresponding to the addition or subtraction of subtotals, the subtotals shall prevail and the total shall be corrected; and

(c) If there is a discrepancy between words and figures, the amount in words shall prevail, unless the amount expressed in words is related to an arithmetic error, in which case the amount in figures shall prevail subject to (a) and (b) above.

(d) If there is such discrepancy in an offer, the same shall be conveyed to the bidder with target date upto which the bidder has to send his acceptance on the above lines and if the bidder does not agree to the decision of the purchaser, the bid is liable to be ignored.

ANNEXURE - VII

BENEFITS FOR MSE SUPPLIERS AS PER MSMED ACT 2006 AND PUBLIC PROCUREMENT POLICY 2012

MSE suppliers can avail the intended benefits only if they submit along with the offer, attested copies of either EM II certificate having deemed validity (five years from the date of issue of Acknowledgement in EM II).

Or

Valid NSIC certificate or EM II certificate along with attested copy of CA certificate (Format enclosed: ANNEXURE VIII) where deemed validity of EM II certificate of five years has expired) applicable for the relevant financial year (latest audited).

Date to be reckoned for determining the deemed validity will be the date of bid opening (Part 1 in case of two part bid).

Non-submission of such documents will lead to consideration of their bid at par with other bidders.

No benefit shall be applicable for this enquiry if any deficiency in the above required documents are not submitted before price bid opening. If the tender is to be submitted through e-procurement portal, then the above required documents are to be uploaded on the portal. Documents should be notarized or attested by a Gazette officer.

ANNEXURE - VIII

CERTIFICATE BY CHARTERED ACCOUNTANT ON LETTER HEAD

This is to certify that M/s …….……
…… ……..(Hereinafter referred to as `Company') having its registered office at …….. is registered under MSMED Act 2006, (Entrepreneur Memorandum No ((Part-II) …… dtd …… Category: …… (Micro/Small). (Copy enclosed).

Further verified from the Books of Accounts that the investment of the company as per the latest audited financial year **…….. as per MSMED Act 2006 is as follows:**
1. For Manufacturing Enterprises: Investment in plant and machinery (i.e., original cost excluding land and building and the items specified by the Ministry of Small Industries vide its notification No.S.O.1722 (E) dated October 5, 2006:
Rs. ……..Lacs.

2. For Service Enterprises: Investment in equipment (original cost excluding land and building and furniture, fittings and other items not directly related to the service rendered or as may be notified under the MSMED Act, 2006:
Rs. ……..Lacs.

The above investment of Rs. …… Lacs in within permissible limit of Rs…… Lacs for……..Micro / Small (Strike off which is not applicable) Category under MSMED Act 2006.

(or)

The company has been graduated from its original category (Micro/Small) (Strike off which is not applicable) and the date of graduation of such enterprise from its original category is ……(dd/mm/yy) which is within the period of 3 years from the date of graduation of such enterprise from its original category as notified vide S.O.No.3322(E) dated 01.11.2013 published in the gazette notification dated 04.11.2013 by Ministry of MSME.

Date:
(Signature)
Name -
Membership Number -

Seal of Chartered Accountant

ANNEXURE - IX

In case of intrastate movement i.e. supply within same state and VAT is applicable, the vendor shall furnish the respective BHEL™s nodal agency TIN no. and address in their invoice.

List of Statewise Nodal Officers with Contact Details

Region	State	Nodal Unit responsible for all other units except those in column 4	Contact Details-Landline No.	E-mail	TIN No.	CST No.
1	2	3		7	8	9
Norther States	Jammu & Kashmir	PSNR	0120-2510488/2416452	rahulb@bhelpsnr.co.in / a.chadha@bhelpsnr.co.in	01291101313	
	Himachal Pradesh	PSNR			02011000622	
	Punjab	PSNR			03451148722	
	Haryana	PSNR			06962606884	
	Rajasthan	PSNR			08232903345	
	Uttar Pradesh	PSNR	0120-2416536	rahulb@bhelpsnr.co.in / smittal@bhelpsnr.co.in	09365800914	
	Uttarakhand	Hardwar	01334-285449	alok@bhelhwr.co.in	05001757277 Dated 30th Sep 2005	5000030 Dated 13/03/1965
	Delhi	TBG	0120-6748429	skjindal@bhel.in	07472001760	07472001760
Western States	Madhya Pradesh	Bhopal	0755-2503231	meeta@bhelbpl.co.in	23573600001 (HEL/05/01/0001/S dated 15/11/1979 under MPCT)	HEL/05/01/0004/C dated 15/11/1979
	Chattisgarh	PSWR	0712-3048609	mgupta@bhelpswr.co.in	22173202974	
	Gujarat	PSWR	0265-2370321	bhavin@bhelpswr.co.in	24190101571	
	Maharashtra	ROD Mumbai	022-22126061/22187850	mahajani@bhel.in	27060300130V	27060300130C
	Daman & Diu	EDN	080-26998724 / 26998830	theerthagiri@bheledn.co.in	25000009902	
Southern States	Orissa	PSSR	044-28286773	sparida@bhelpssr.co.in , lakshmi@bhelpssr.co.in	21031301916	
	Tamil Nadu	Trichy	0431-2577757/ 2577229	msrao@bheltry.co.in /bharaths@bheltry.co.in	33243560005	239383 dt.11.6.91
	Kerala	PSSR	044-28286773	lakshmi@bhelpssr.co.in	32072043622	
	Karnataka	EDN	080-26998724 / 26998830	theerthagiri@bheledn.co.in	29180069268	00850081
	Telangana	HPEP RC, Puram	040-23185406/ 040-23182238	chand@bhelhyd.co.in sbsv@bhelhyd.co.in	36360151179	
	Andhra Pradesh	HPVP, Vizag	0891-6681298	sarmaass@bhpvl.com	37418632431	
	Puducherry	PSSR				
Eastern States	West Bengal	PSER	033-23216130-3238	amitavac@bhelpser.co.in	19200936019	19200936213
	Bihar	PSER	0612-2231275	rakesh@bhelpser.co.in	10010994046	10010994046
	Jharkhand	PSER	06549-266351(Sh. Parmanand Swaroop)/06534-292179 (Sh. K.K. Ajeet)	pswaroop@bhelpser.co.in (Bokaro) kk.ajit@bhelpser.co.in (Koderma/Abhijeet/North Karanpura) manishk.jain@bhelpser.co.in (Chandrapura)/kpsubbu@bhelpser.co.in kpsubbu@bhelpser.co.in	20352205642 (Bokaro) 20082005255 (Maithon) 20512405410 (Koderma) 20122200394 (Chandrapura) 20620905730(Adhunik) 20650507026(Abhijeet) 20452110016 (North Karanpura)	TG-729(C)
	Mizoram	PSER	033-23216130-3249	anindya@bhelpser.co.in	15501465017	
	Arunachal Pradesh	PSER	033-23216130-3249	anindya@bhelpser.co.in	12020122182	Not Applied
	Assam	PSER	033-23216130-3249	anindya@bhelpser.co.in	18790101415	18179903204
	Tripura	PSER	03821-265209	mkmahato@bhelpser.co.in	16060947071	16060947273
	Sikkim	PSER				
	Meghalaya	PSER				
	Manipur	PSER				
	Nagaland	PSER				