PRODUCT STANDARD

BHEL, HYDERABAD –32.
PROJECT ENGINEERING & SYSTEMS DIVISION

COPYRIGHT AND CONFIDENTIAL
The information on this document is the property of BHARAT HEAVY ELECTRICALS LIMITED,
It must not be used directly or indirectly in any way detrimental to the interest of the company.

PURCHASE SPEC FOR FIRE PUMPS WITH DRIVES

COPYRIGHT AND CONFIDENTIAL
The information on this document is the property of BHARAT HEAVY ELECTRICALS LIMITED .
It must not be used directly or indirectly in any way detrimental to the interest of the company.

Ref. Doc

Please refer specification, PEMC-06945 & annexures for details on Fire Pumps (Hydrant Booster Pumps) with drives.

VARIANT TABLE

Variant No.	Item	Material code	Job Specification	Project
~~01~~	~~Jockey Pump with Motor~~	~~PY9751231019~~	~~PEMC 06591~~	~~NORTH KARANAPURA~~
~~02~~	~~Mand Spares for Jockey Pump With Drive Motor~~	~~PY9751231027~~	~~PEMC 06591~~	~~NORTH KARANAPURA~~
~~03~~	~~Supervision of Erection & Commissioning of Motor driven Jockey Pump~~	~~PY9851231037~~	~~PEMC 06591~~	~~NORTH KARANAPURA~~
~~04~~	~~Hydrant cum spray Pump with drive motor~~	~~PY9751231043~~	~~PEMC 06806~~	~~KPCL-Yelhanka~~
~~05~~	~~Hydrant cum spray Pump with diesel engine drive~~	~~PY9751231051~~	~~PEMC 06806~~	~~KPCL-Yelhanka~~
~~06~~	~~Mand Spares for Hydrant pump cum Spray water Pump With Drives~~	~~PY9751231060~~	~~PEMC 06806~~	~~KPCL-Yelhanka~~
~~07~~	~~Mand Spares for Hydrant pump cum Spray water Pump with diesel engine Drives~~	~~PY9751231078~~	~~PEMC 06806~~	~~KPCL-Yelhanka~~
~~08~~	~~Supervision of Erection & Commissioning of Hydrant cum spray Pump~~	~~PY9851231088~~	~~PEMC 06806~~	~~KPCL-Yelhanka~~
~~09~~	~~Supervision of Erection & Commissioning of Motor of Hydrant cum spray Pump~~	~~PY9851231096~~	~~PEMC 06806~~	~~KPCL-Yelhanka~~
~~10~~	~~Supervision of Erection & Commissioning of Diesel Engine of Hydrant cum spray Pump~~	~~PY9851231100~~	~~PEMC 06806~~	~~KPCL-Yelhanka~~
~~11~~	~~Jockey Pump with drive motor~~	~~PY9751231116~~	~~PEMC 06806~~	~~KPCL-Yelhanka~~
~~12~~	~~Mand Spares for Jockey pump With Drives~~	~~PY9751231124~~	~~PEMC 06806~~	~~KPCL-Yelhanka~~
~~13~~	~~Supervision of Erection & Commissioning of Jockey pump~~	~~PY9851231134~~	~~PEMC 06806~~	~~KPCL-Yelhanka~~
~~14~~	~~Supervision of Erection & Commissioning of Motor of Jockey pump~~	~~PY9851231142~~	~~PEMC 06806~~	~~KPCL-Yelhanka~~
~~15~~	~~Booster hydrant Pump with motor~~	~~PYXXXXXXX~~	~~PEMC-06863~~	~~KOTHAGUDEM~~
~~16~~	~~Booster hydrant Pump with Diesel Engine~~	~~PYXXXXXXX~~	~~PEMC 06863~~	~~KOTHAGUDEM~~
~~17~~	~~Booster Spray Pump with motor~~	~~PYXXXXXXX~~	~~PEMC 06863~~	~~KOTHAGUDEM~~
~~18~~	~~Booster spray Pump with Diesel Engine~~	~~PYXXXXXXX~~	~~PEMC 06863~~	~~KOTHAGUDEM~~
~~19~~	~~Mand Spare_ Booster hydr pump_motor_Engine~~	~~PYXXXXXXX~~	~~PEMC 06863~~	~~KOTHAGUDEM~~
~~20~~	~~Mand Spare_ Booster spry~~	~~PYXXXXXXX~~	~~PEMC 06863~~	~~KOTHAGUDE~~

COPYRIGHT AND CONFIDENTIAL
The information on this document is the property of BHARAT HEAVY ELECTRICALS LIMITED .
It must not be used directly or indirectly in any way detrimental to the interest of the company.

	~~pump_Motor_ Engine~~			~~M~~
~~21~~	~~Supervision of E & C of Hydrant booster Pump~~	~~PYXXXXXXXX~~	~~PEMC-06863~~	~~KOTHAGUDEM~~
~~22~~	~~Supervision of E & C of Motor for Hyd Booster pump~~	~~PYXXXXXXXX~~	~~PEMC-06863~~	~~KOTHAGUDEM~~
~~23~~	~~Supervision of E & C of Diesel Engine for Hyd Booster pump~~	~~PYXXXXXXXX~~	~~PEMC-06863~~	~~KOTHAGUDEM~~
~~24~~	~~Supervision of E & C of Spray booster pump~~	~~PYXXXXXXXX~~	~~PEMC-06863~~	~~KOTHAGUDEM~~
~~25~~	~~Supervision of E & C of Motor for Spray booster Pump~~	~~PYXXXXXXXX~~	~~PEMC-06863~~	~~KOTHAGUDEM~~
~~26~~	~~Supervision of E & C of Diesel Engine for Spray Booster pump~~	~~PYXXXXXXXX~~	~~PEMC-06863~~	~~KOTHAGUDEM~~
~~27~~	~~Booster hydrant Pump with motor~~	~~PY9751231272~~	~~PEMC-06931~~	~~NORTH KARANPURA~~
~~28~~	~~Booster hydrant Pump with Diesel Engine~~	~~PY9751231280~~	~~PEMC-06931~~	~~NORTH KARANPURA~~
~~29~~	~~Booster Spray Pump with motor~~	~~PY9751231299~~	~~PEMC-06931~~	~~NORTH KARANPURA~~
~~30~~	~~Booster spray Pump with Diesel Engine~~	~~PY9751231302~~	~~PEMC-06931~~	~~NORTH KARANPURA~~
~~31~~	~~Mand Spare_ Booster hydr pump_motor_Engine~~	~~PY9751231310~~	~~PEMC-06931~~	~~NORTH KARANPURA~~
~~32~~	~~Mand Spare_ Booster spry pump_Motor_ Engine~~	~~PY9751231329~~	~~PEMC-06931~~	~~NORTH KARANPURA~~
~~33~~	~~Supervision of E & C of Hydrant booster Pump~~	~~PY9851231339~~	~~PEMC-06931~~	~~NORTH KARANPURA~~
~~34~~	~~Supervision of E & C of Motor for Hyd Booster pump~~	~~PY9851231347~~	~~PEMC-06931~~	~~NORTH KARANPURA~~
~~35~~	~~Supervision of E & C of Diesel Engine for Hyd Booster pump~~	~~PY9851231355~~	~~PEMC-06931~~	~~NORTH KARANPURA~~
~~36~~	~~Supervision of E & C of Spray booster pump~~	~~PY9851231363~~	~~PEMC-06931~~	~~NORTH KARANPURA~~
~~37~~	~~Supervision of E & C of Motor for Spray booster Pump~~	~~PY9851231371~~	~~PEMC-06931~~	~~NORTH KARANPURA~~
~~38~~	~~Supervision of E & C of Diesel Engine for Spray Booster pump~~	~~PY9851231380~~	~~PEMC-06931~~	~~NORTH KARANPURA~~
~~39~~	~~Hydrant Booster pump with Motor~~	~~PY9751231396~~	~~PEMC-06945~~	~~WANAKBORI~~
~~40~~	~~Hydrant Booster pump with Diesel Engine~~	~~PY9751231400~~	~~PEMC-06945~~	~~WANAKBORI~~
~~41~~	~~Mandatory spares Hydrant Booster Pumps_Motor_Engine~~	~~PY9751231418~~	~~PEMC-06945~~	~~WANAKBORI~~
~~42~~	~~Supervision of E&C of Hydrant Booster Pump~~	~~PY9851231428~~	~~PEMC-06945~~	~~WANAKBORI~~
~~43~~	~~Supervision of E&C of Motor Hydrant Booster Pump~~	~~PY9851231436~~	~~PEMC-06945~~	~~WANAKBORI~~
~~44~~	~~Supervision of E&C of Diesel Engine of Hydrant Booster Pump~~	~~PY9851231444~~	~~PEMC-06945~~	~~WANAKBORI~~
45	Motor driven Hydrant Pump	PY9751231450	PY-AS-4-M087-8682-01	NSPCL
46	Engine driven Hydrant Pump	PY9751231566	PY-AS-4-M087-8682-01	NSPCL
47	Motor driven Spray water Pump	PY9751231477	PY-AS-4-M087-8682-01	NSPCL

COPYRIGHT AND CONFIDENTIAL
The information on this document is the property of BHARAT HEAVY ELECTRICALS LIMITED .
It must not be used directly or indirectly in any way detrimental to the interest of the company.

48	Engine driven Spray water Pump	PY9751231485	PY-AS-4-M087-8682-01	NSPCL
~~49~~	~~Spray Jockey Pump with Motor~~	~~PY9751231493~~	~~PY-AS-4-M087-8682-01~~	~~NSPCL~~
~~50~~	~~Hydrant Jockey Pump with Motor~~	~~PY9751231507~~	~~PY-AS-4-M087-8682-01~~	~~NSPCL~~
~~52~~	~~Hydrant Jockey Pump with Motor~~	~~PY9751231523~~	~~PY-AS-4-M087-8682-01~~	~~NSPCL~~
~~53~~	~~Spray Jockey Pump with Motor~~	~~PY9751231531~~	~~PY-AS-4-M087-8682-01~~	~~NSPCL~~
~~54~~	~~Supervision of Erection & Commissioning of Hydrant/Spray Pump~~	~~PY9851231541~~	~~PY-AS-4-M087-8682-01~~	~~NSPCL~~
~~55~~	~~Supervision of Erection & Commissioning of Motor of Hydrant/Spray Pump~~	~~PY9851231550~~	~~PY-AS-4-M087-8682-01~~	~~NSPCL~~
~~56~~	~~Supervision of Erection & Commissioning of Diesel Engine of Hydrant/Spray Pump~~	~~PY9851231568~~	~~PY-AS-4-M087-8682-01~~	~~NSPCL~~
~~57~~	~~Supervision of Erection & Commissioning of Jockey pump~~	~~PY9851231576~~	~~PY-AS-4-M087-8682-01~~	~~NSPCL~~
~~58~~	~~Supervision of Erection & Commissioning of Motor of Jockey pump~~	~~PY9851231584~~	~~PY-AS-4-M087-8682-01~~	~~NSPCL~~
~~59~~	~~Mandatory spare for jockey pump~~	~~PY9751231590~~	~~PY-AS-4-M087-8682-01~~	~~NSPCL~~
60	Vertical Hydrant Pump _Motor driven	PY9751231604	PY-AS-4-M078-8682-01	Bhadradri
61	Vertical Hydrant Pump _ Engine driven	PY9751231612	PY-AS-4-M078-8682-01	Bhadradri
62	Vertical spray Pump _Motor driven	PY9751231620	PY-AS-4-M078-8682-01	Bhadradri
63	Vertical spray Pump_ Engine driven	PY9751231639	PY-AS-4-M078-8682-01	Bhadradri
64	Mandatory spares for pumps, motors and engines	PY9851231649	PY-AS-4-M078-8682-01	Bhadradri
68	Supervision of Erection & Commissioning of Hydrant/Spray Pumps	PY9851231681	PY-AS-4-M078-8682-01	Bhadradri
69	Supervision of Erection & Commissioning of Diesel Engine of Hydrant/Spray Pump	PY9851231690	PY-AS-4-M078-8682-01	Bhadradri
70	Supervision of Erection & Commissioning of Motor of Hydrant/Spray Pump	PY9851231703	PY-AS-4-M078-8682-01	Bhadradri

HYDERABAD

PRODUCT STANDARD

BHEL, HYDERABAD –32.
PROJECT ENGINEERING – MECHANICAL

PY 51231

Rev No. 05

COPYRIGHT AND CONFIDENTIAL
The information on this document is the property of BHARAT HEAVY ELECTRICALS LIMITED,
It must not be used directly or indirectly in any way detrimental to the interest of the company.

RECORD OF REVISIONS

Rev. No.	Date	Revision Details	Prepared/ Revised By	Approved By
00	03.02.16	FRESH ISSUE		
01	09.06.16	Variants 04 to 14 added		
02	09.06.16	Variants 15 to 26 added		
03	11.08.16	Variants 27 to 38 added		
04	14.09.16	Variants 39 to 44 added		
05	10.04.17	Variants 45 to 59 added		
06	10.05.17	Variants 60 to 70 added		

Ref. Doc

COPYRIGHT AND CONFIDENTIAL
The information on this document is the property of **BHARAT HEAVY ELECTRICALS LIMITED,** used directly or indirectly in any way detrimental to the interest of the company.

TECHNICAL PURCHASE SPECIFICATION

FOR

HYDRANT –SPRAY WATER PUMPS INCLUDING DRIVES [VERTICAL TURBINE TYPE]

PROJECT	BHADRADRI THERMAL POWER STAION 4 x 270 MW
CUSTOMER	TELANGANA STATE POWER GENERATION CORPORATION (TSGENCO)
CONSULTANT	M/S DEISEIN INDIA PVT LTD

	Prepared by :	Checked by :	Approved by :	Date :
Revisions:00 Refer to record of revisions	OM	GIRISH	M.S.P.B	08.05.17

DOCUMENTS TO BE SUBMITTED WITH THE BID:

The bidder must submit the following documents along with their bid for each Pump, so as to enable BHEL to evaluate their offer.

a) Duly filled in Pump-Motor-Diesel engine datasheet
b) Tentative GAD / P&ID for Pump with Motor & Engine
c) Performance curves for pump
d) Un-priced copy of price in attached BHEL price bid formats indicating quoted/ not quoted against each row & column.
e) Equipment qualification criteria / PTR / Reference Lists
f) Checklist as per annexure-4
g) Deviation list [if any] as per annexure-14

In case the above-mentioned documents are not submitted with the offer, the offer of the bidder may be liable for technical rejection.

1.0.0 INTENT OF SPECIFICATION:

This specification specifies the requirement of Design, Engineering, Manufacturing, Assembling, Inspection, testing at manufacturer's works and Delivery properly packed and painted and transportation of Hydrant-Spray Water Pumps (Fire water Pump) of vertical turbine type including drives with all accessories as specified in the scope of work and as required for the safe and trouble-free operation of equipment to be installed at site.

2.0.0 SPECIAL NOTES TO BIDDERS:

2.0.1 This specification shall be read in conjunction with its enclosures. In case of any discrepancy arising between this specification & its enclosures, the most stringent of all shall be followed and shall over-ride others. Further, if a requirement in this specification or its enclosures, calls for decision of BHEL, it shall be bidder's sole responsibility to clearly bring out the same distinctively in his technical tender offer, so as to enable BHEL to furnish their decision. If such a requirement is not duly addressed by bidder during tender stage and same comes out during order execution stage, it shall be binding on the bidder to comply with the decision furnished by BHEL then, without any cost, delivery, or any other commercial implications.

a) Bidders shall comply with various requirements of this specification. Bidders can bring out only those deviations which are impractical to meet, for our review.
b) Bidders may please note that unless the deviations are specifically brought out under deviations clause, it will be considered that no deviations are taken, even if they are mentioned elsewhere directly/indirectly in the offer.

2.0.2 Any additional equipment, material, etc., which are not specifically mentioned here, but are required to make the supplied equipment complete in all respect, in accordance with the intent of this technical specification, contractual agreement, statutory requirements, relevant/applicable codes/standards, good engineering practices, and for safe and trouble-free operation, shall be deemed to be covered under the scope of this specification.

2.0.3 The Bidder shall accept full responsibility for the completeness and for the faultless working of all the equipment. These shall be executed on the basis of proven design principle and in accordance with the latest state of the art in such a manner that the purpose to be served by the Pump unit is fulfilled in every respect and a maximum of operational dependability and efficiency are assured. Standardization of equipment, materials etc. shall be employed in the design. Care shall be taken to ensure safe operation as well as simplicity of assembling and dismantling of all parts of the plant.

2.0.4 Bidder shall quote strictly as per the scope of supply and requirements of this specification.

2.0.5 Bidder offer shall be strictly as per these specification requirements. Unsolicited or Alternate offers from the bidders will not be entertained.

2.0.6 In case bidder feels that it is necessary to exclude some components of scope of supply or some of the features of specification requirements due to any technical constraints, bidder shall bring the same to the notice of purchaser during pre-bid stage and take their prior approval before submission of their bid.

2.0.7 Incase Bidder is unable to offer due to any specific requirement of specification. Bidder shall bring out the same in their regret letter. Otherwise it will be considered that non participation by the bidder is attributable to reasons other than any specification requirements.

3.0.0 APPLICATION OF SYSTEM:

3 no's [3 Working] of motor driven Main Hydrant Pump (Vertical) are envisaged for supplying water to Hydrant header from the fire water storage sump.

2 no's [2 Stand by] of Diesel Engine driven Hydrant Pump (Vertical) are envisaged for supplying water to Hydrant header from the fire water storage sump.

2 no's [2 Working] of motor driven Main Spray water Pump (Vertical) are envisaged for supplying the water to the spray water system from the Fire water storage sump.

1 no's [1 Stand by] of Diesel Engine driven Spray water Pump (Vertical) are envisaged for supplying the water to the spray water system from the Fire water storage sump.

Location of Pump, Motor & Diesel Engine: Fire water pump house, Indoor

4.0.0 TECHNICAL DETAILS/REQUIREMENTS:

4.1.0 Design Parameters of the Hydrant and Spray water Pump:

Sl. No.	Description	Unit	Rated Condition
1	Temperature Of Fluid	Deg. C	Ambient (Pls refer site details as per 4.3.0)
3	Capacity Of each pump	m3/hr	410
4	Pump Differential Head(At Discharge Flange)	mwc	115
5	Available Pressure at centre line of Suction nozzle of Pump	mwc	10.36
6	Margin between $NPSH_A$ & $NPSH_R$		1 m at rated condition & NPSHR shall be less than NPSHA at the end of the curve condition.

4.2.0 Site Details:

Elevation above MSL: 89 m
Monthly highest temperature: 44.9 ºC
Monthly lowest temperature. : 12.9 ºC
Rainfall Average : 1031 mm
Max. : 100 mm/ hr
Mean Wind speed: 5.8 kmph
Relative Humidity, Max: 82%
Min: 35%
Seismic Zone: Zone-III as per IS- 1893 (Part-IV)
(As per Section II of Volume II A of e-PCT/TS/K/02/2014-15 for Kothagudem TPS)

Note: Though the specification/requirement is for Bhadradri project, Kothagudem specification is enclosed & same to be followed.

5.0.0 SCOPE OF SUPPLY:

The scope of supply for this enquiry is as given below:

Please refer to the enclosed P&ID for Hydrant, Spray water Pumps (Annexure-1) for general clarity on scope of supply. The system shall be provided as per annexure-1 taking into all requirements including for testing, painting, documentation, sub vendor list, equipment specifications etc., specified in this specification and enclosures.

Quantity of Pump & Drive Assembly:

(i) 5 No of Motor Driven Hydrant/Spray water Pump [Vertical turbine type].
(ii) 3 No of Diesel Engine Driven Hydrant/Spray water Pump. [Vertical turbine type].

The scope of supply for each pump & motor/ Diesel Engine drive assembly is as given below:

5.1.0 Pump:

Vertical turbine type Centrifugal pump complete with all accessories as per specification. Pl refer annexure-5.
Performance requirement, Design and construction of the pump shall be guided by the TAC recommendations & as per enclosed specification. (Also Refer Annexure-1 and 2 for more details)

5.2.0 Drives for pumps [Motor/Diesel Engine]:

5.2.1 Motor: **Note: For Hydrant/Spray pump, the Supply voltage level is 6.6 kV, irrespective of Motor Rating.**

Suitable drive motor complete with terminal box, canopy, space heater, cable glands, earthing lugs and all other accessories required as per specification. Performance requirement, Design and construction of the Motor shall be guided by the TAC recommendations & as per enclosed specification. (Also Refer **Annexure-2, 5, 6 & 7** for more details on Voltage Level & Technical Details of Motor).

5.2.2 Diesel Engine:

Performance requirement, Design and construction of the diesel engine shall be guided by the TAC recommendations & as per enclosed specification. (Also Refer Annexure-2 for more details). For engine instrumentation & other details, pls refer annexure-5.

5.2.2.1 Diesel Engine control panel:

PLC based Diesel Engine Control panel meeting to the requirements of TAC for each engine shall be included in bidder scope of supply. The various panels shall be operated on DC Supply, suitably converted by dedicated rectifier bank, redundant transformers from mains A.C. Further, Battery back-up shall also be provided along with auto-change over from normal to Battery supply in case of non-availability of Mains supply. The Control panel shall be mounted on structural steel. The Structural Steel (As per Attached Annexure-1A) shall be supplied by BHEL. However, necessary fixing arrangements such as nuts-bolts etc for mounting of the panel shall be in bidder scope of supply. All interconnecting cabling [control/signal/power] from engine to control panel, from battery to panel etc is in BHEL scope of supply. Bidder to furnish cable BOQ & electrical loads. Exact power supply to the panel shall be discussed during detailed engineering stage.

5.2.2.2 Diesel Engine Fuel tank with reqd. piping:

Fuel oil tank having storage capacity sufficient to run the engine at full load for at least **six (6) hours**, **Level transmitter,** piping & valves for each engine (As per Annexure-1) shall be included in bidder scope. Any valve in the fuel feed pipe between the fuel tank and the engine shall be placed adjacent to the tank and it shall be locked in the open position. Pipe joints shall not be soldered and plastic tubing shall not be used. Structural Steel for supporting structures (As per Attached Annexure-1A) is in **BHEL scope**. However, supporting details to be provided by bidder during detail Engg. Bidder to recommend suitable height & distance from diesel engine & accordingly bidder to consider required piping in their scope of supply.

5.2.2.3 Diesel Engine Fuel Pump:

A suitable 1 phase 230 Volt fuel pump (portable) to be provided to fill up diesel oil from Diesel Drum received from supplier of Diesel. This pump should also have facility to be operated by hand, in case electricity fails. However, if same is not available in market then bidders can supply one hand pump & one motor drive pump [ex-proof] separately. Necessary tubing from Diesel Engine pump to the fuel tank along with valve (If any) to be supplied by Bidder.

5.2.2.4 Diesel Engine Exhaust system:

Bidder to consider 15 m of exhaust piping with silencer & insulation with 6 Nos. of bends. The exhaust piping shall consist of bends, hood, bird screen etc. [For Additional Details please refer annexure-1].

5.2.2.5 Battery & Battery Charger:

5.2.2.5.1 Each engine shall be provided with 2 Nos. [2x100%] battery units as per IS. Battery shall be sized to Cater for the following without any charging in between:

a) The Battery shall have the capacity to start the Diesel engine at least for twelve times successively, each for a duration of 10 sec. Further Battery shall have capacity to meet auxiliaries & other loads of Local Control Panel (if any) for a minimum period of 10 hours. Minimum Ampere-hour capacity of the Battery shall be selected accordingly.

b) Bidder shall compute the ampere hour capacity at suitable discharge rate based on above duty and furnish the calculation along with the Bid which shall consider the duty cycle and 25% & 15% compensation for ageing & unforeseen future growth respectively of each battery unit. The maximum and minimum ambient shall be 42°C and 11.7°C respectively. The minimum voltage at the end of the load cycle shall not be less than 1.8 volts per cell.

5.2.2.5.2 Each diesel engine shall be provided with two (2) battery charger units of air cooled design. Each charger unit shall be capable of charging one (1) set of battery at a time. Provision shall, however, be kept so that any of the charger units of a particular engine can be utilised for charging any one of the two (2) batteries of that engine. All other details shall be as per TAC guide lines.

5.3.0 Coupling between pump and Motor:

Coupling between pump and motor shall comply with the following:

a) Coupling shall be as per as per manufacturer's standard
b) Metallic, Non-lubricated, flexible element type [diaphragm or disc type],

c) With Non sparking type coupling guard
d) With spacer [The spacer nominal length shall be at least 125 mm or more and shall permit removal of the coupling, bearings, seal and rotor, as applicable, without disturbing the driver or the suction and discharge piping.] With a minimum service factor of 1.5.

5.4.0 Common base frame with fixing bolts for each Pump & its drives (In case of Motor Driven). The Pumping set(s) shall be securely mounted on a robust bedplate and shall be free from vibration at all Variations of load.

5.5.0 Gear Box [for Engine driven Pump]:
Gear drive conforming to approval standard of Factory Mutual system or right angled gear drive class no 1338 all to be used between pump & Diesel engine. Suitable coupling between Pump & Gear box and between engine & gear box shall be provided by the bidder.

5.6.0 MECHANICAL SEAL: Cartridge type Mechanical seal as per manufacturer's standard.

5.7.0 Inter connecting Piping & Instrumentation:

Interconnecting piping and instrumentation as per P&I D [Annxure-1]
Reducer/expander, Flanges & Counter flanges with necessary gaskets & bolts at all terminal points as per annexure-1. For all pipe fittings refer annexure-5.

5.8.0 Necessary foundation bolts, nuts, shims/grouting pads etc.

5.9.0 Provision for Vibration probes and Key phasor:

Only provision for mounting probes shall be made available on Pump & Drives. Provision for mounting Key Phasor to be provided on Motor. Notch dimension on motor and vibration pad details (Dimension, tapping details) shall be provided during detail engineering stage. Flat surface to be provided by bidder for welding blocks, the flat surface dimension shall be given during detail engineering.

5.10.0 Bearing & Winding instruments & JB for Pumps & Drives:

For Motor:

- Winding RTD [(12) nos. simplex type winding temperature detectors, four (4) nos. per phase.]
- Bearing RTD [1 no duplex type temperature detectors for each bearing]
- Dial type local indicator with alarm contacts shall be provided for each bearing

For Engine:

- Bearing RTD & Temperature Gauges to be provided for each bearing

For Pump:

- Bearing RTD & Temperature Gauges to be provided for each bearing

5.10.3 Junction Box:

- For each Pump skid: 1 No. JB/Pump
- For Motor Winding & Bearing RTDs -1 No. of JB/Motor (Generally this is provided by motor manufacturer, it is the integral part of motor)

5.11.0 Complete Unit Test: Complete unit test is included in the bidder scope of supply.

5.12.0 First Fill of Lubricant: Excluded from bidder scope of supply.

5.13.0 All other items necessary for safe and smooth running of pump & Accessories required to make the supplied equipment complete in all respect.

5.14.0 Commissioning Spares:

For Hydrant- Spray Pump & Drives assembly:

5 sets (One set for each pump & motor assembly) of commissioning spares for Hydrant and Spray Pump with drive motor shall be quoted as per manufacturer's recommendation. Commissioning spares shall contain Minimum 1 Set of O rings & gaskets for each Pump & 1 Set of Commissioning Spares for Drive as per Manufacturer recommendation.

3 sets (One set for each pump & Diesel Engine assembly) of commissioning spares for Hydrant and Spray Pump with Diesel Engine shall be quoted as per manufacturer's recommendation. Commissioning spares shall contain Minimum 1 Set of O rings & gaskets for each Pump & 1 Set of Commissioning Spares for Drive as per Manufacturer recommendation.

1 set stands for requirement for one no. of pump & drive assembly. Bidder to furnish the list along with the offer.

Any commissioning spare required over and above the recommended commissioning spares during commissioning shall be supplied free of cost by the equipment vendor.

5.15.0 Mandatory Spares:

15.5.1 Mandatory Spares For Pumps

Equipment Name	Quantity
a) Complete bowl assembly	1 set
b) Impeller [s]	1 set
c) Shaft	1 set
d) Casing Wearing rings	1 set
e) Impeller Wearing rings	1 set
f) Shaft sleeves	2 sets
g) Shaft Coupling	1 set
h) Shaft Nut and key	1 set
i) Lantern ring	1 set
j) Bell mouth liner	1 set
k) Bearing (Various types as applicable)	1 set
l) Pump Motor Coupling	1 set

15.5.2 Mandatory Spares For Motor

Equipment Name	Quantity
a) Bearing(Driving End)	1 No.
b) Bearing(Non-Driving End)	1 No.
c) End Shield (DE and NDE)	1 set
d) Cooling Fan of motors (Internal and external)	1 set
e) Fan cover	1 set
f) Bearing Temperature Gauge Driving & Non-Driving End	1 set
g) Phase segregated terminal box	1 set
h) Neutral End Terminal Bushing with Fasteners	1 No.
i) RTD for Bearing Temperature:	1 No.
j) Motor Space Heater	1 No.
k) Complete Set of Coupling	1 set

15.5.3 Mandatory Spares For Engine

Equipment Name	Quantity
a) Element for lub oil Filter:	2 No.
b) Element for Fuel Filter:	2 No.
c) Outer Element for Air cleaner:	2 No.
d) Inner Element for Air cleaner:	2 No.
e) Turbo-charger:	1 No.
f) Engine - starter Motor:	1 No.
g) Injector:	2 No.
h) Piston rings & liner set:	2 sets

15.5.3 Mandatory Spares For Instrumentation

Transmitters/ Gauges/Switches etc. along with relevant accessories: 10% of total or at least two (whichever is higher) for each type along with accessories.

Temperature Element (RTD/Thermo-couple) with thermowell: 10% of each type, range and immersion length .Minimum 5 nos.

Special notes for Mandatory spares:
1) The word 'TYPE' means the Make, Model no., Type, Range, Size/ Length, Rating, Material as applicable.
2) All Mandatory spares should be supplied separately with green color painted box.
3) Loose items sent by Vendor to sites shall be quantified/numbered/tagged and not merely mentioned as ONE lot of loose items.
4) A packing list covering items having shelf life are to be intimated to site. Also, shelf life items shall be packed separately in black color painted box for easy identification at site.

5.16.0 Auxiliaries equipment's/Spares:
Bidder to include all auxiliary equipment & spares as per TAC for Pump, Motor & Diesel Engine.

5.17.0 Special Tools and Tackles:

The bidder shall furnish a complete 2 sets [1 set each for Pumps with Drive Motors & Pumps with Diesel Engines] of all special tools, wrenches etc. with necessary tools boxes as required for operation and maintenance [disassemble, assemble, or maintaining the unit] of the Hydrant & Spray water Pump supplied, as a part of scope of supply. **Bidder shall furnish a list of such tools along with offer for the system.** Prices for the special tools and tackles shall be part of main scope of supply. No separate price shall be offered for the same.

5.18.0 Counter flanges with gaskets and fasteners, suitable reducers/expanders to meet BHEL discharge pipe size.

5.19.0 Suction Strainer: Suction strainer at pump bell mouth as per manufacturer's recommendation suitable for this application.

5.20.0 Conflicts in Specification requirement:
In case of any conflict between this specification and Annexures stringent of the requirement will govern.

5.20.0 All instrumentation shall be as per annexure-17.

5.21.0 SUPERVISION OF ERECTION & COMMISSIONING:
Supervision of erection, commissioning of the supplied system shall be included in bidder's scope of service.
Bidder to note that the supervision charges for erection & commissioning shall consists of the following:

- Per day supervision charges of an Engineer including all other expenses like boarding, lodging, local travel, insurance etc.
- Travel expenses (inclusive of any clearance charges like Visa fee etc, insurance) from / to vendor works to site.

NOTES:
Per diem charges shall be applicable from the day bidder's representative reports to site, up to the day certified by BHEL's site.
For the purpose of tender following to be considered: [for details pls price bid format]

Hydrant & Spray Pump with Drives:

16 days for all the 8 nos of pumps [2 man days for each Pump]
10 days for all the 5 nos of Motors [2 man days for each Motor]
6 days for the 3 nos of Diesel engine [2 man days for each Diesel engine]
8 visits for all the 8 no's of pumps [1 visit for each Pump]
5 visits for all the 5 nos of Motors [[1 visit for each Motor]
3 visits for 3 Diesel Engines [1 visit for each Diesel engine]

- However, either or both of the number of man days or number of visits may change on either side based on the actual site requirement.
- All payments towards supervision of E&C shall be made only after BHEL-site certification.
- Bidder to mobilize concerned competent person for supervision of Erection & commissioning activities within a period of 7 days of receipt of intimation in this regard by BHEL.
- Bidder to quote supervision of erection and commissioning activities strictly as per BHEL's price format

6.0.0 OPTIONAL PRICES: Please Refer to Attached Price Bid Format.
Bidder to furnish the following as optional prices 2 year recommended spares for each pump

7.0.0 EQUIPMENT QUALIFICATION CRITERIA (EQC)

Bidder to submit the Equipment Qualification Criteria for Centrifugal Vertical type of Hydrant/Spray water Pump as detailed below:

The bidder shall be an established manufacturer of Vertical Centrifugal design pumps for Fire Protection System & having adequate engineering, manufacturing & testing facilities for pumps confirming to the relevant HIS, IS-1710, IS 5120 Equivalent Standard & Comply with the regulations of Tariff Advisory Committee (TAC) of Insurance Companies of India / LPA India / NFPA USA. Any other International Standard having equivalent stringent codes may also be considered. The pump model offered shall be from the existing regular manufacturing range of bidder.

The offered pump model shall meet the minimum service & manufacturing experience specified as below:
Bidder should have engineered, manufactured, tested, supplied and commissioned at least Five (5) nos. of identical or similar Pumps (or higher capacity pumps) in terms of Flow, Differential Pressure, Material of construction, Column length, speed, drive [Motor, Diesel Engine], Drive rating etc in the last Seven years and at least Two (2) of these pumps shall have commissioned and kept in trouble free operations for the past 2 years as on the bid due date. Bidder to give documentary evidence for the same. Bidder to furnish dully filled in proforma as per Annexure-13.

8.0.0 QUALITY PLAN & INSPECTION AGENCY & TESTING:

8.1.0 QUALITY PLAN:

Quality plan will be reviewed during detailed Engineering stage with respect to Inspection, standard Engineering practices & Specification Requirements and various tests and stages of inspection and appropriate agencies for Inspection will be Intimated. Bidder to abide by the same.

For guide lines & format pls refer **Annexure-09**.

8.2.0 INSPECTION AGENCY:

BHEL/Third Party appointed by BHEL.
The various review/witness/observation stages by individual agencies (or) Group of Agencies as above will be in line with approved quality plan. Also refer Annexure-08 & 09.

8.3.0 TESTING:

The design and Testing Standards of the Pumps shall conform to the standards as indicated in the TAC recommendation/HIS. However, following to be consider as a minimum requirement:
Capacity higher than 30 kw, one in three pumps shall pass a performance test to DIN 1944 class II, with measurements taken at 0%, 50%, 80%, 100%, and 120% of specified discharge at rated speed. The Results have to be certified in a workshop certificate 2.3 to DIN 50049. For pumps of a capacity higher than 100 kw, the shop tests shall be compulsory; test certificate 3.1 B in accordance with DN 50049.

Performance tolerance shall be as mentioned below:

- Rated head at rated flow: Zero negative tolerance
- Shut-off head: Zero negative tolerance. 5% Positive tolerance permitted.
- Rated BKW: Zero positive tolerance. Positive tolerance permitted till motor rating meets end of the curve condition

For details pls refer Annexure-8 & 9.

9.0.0 PAINTING:

Near White Blast Cleaning to be done as per SSPC SP 10 / NACE 2 / S 2½

All surfaces shall have a minimum of three coats of paint made up as follows:
Primer coat : 35 micron DFT
Tie coat : 35 micron DFT
Finishing coat (2 Nos.) : 25 micron DFT per coat
The total minimum DFT shall be 120 micron.

Manufacture shall proceed as per their own standard. however as a minimum epoxy paint shall be used.

Paint shade: 536 of IS 5

For details pls refer Annexure 11.

10.0.0 PACKING AND FORWARDING:

Bidder to note that Packing and Forwarding shall be as per manufacturing standard meeting the requirement is acceptable. Packing shall be suitable for outdoor storage: More than 6 months. Being minor the same shall be discussed during Detail Engineering.

11.0.0 SUB VENDORS:

1) HT Motors: BHEL-Bhopal
2) Other items as per attached Annexure 12. [Sub Vendor List]

Bidder shall follow approved sub vendors list. In case of any specific practical difficulty, bidder is requested to bring out the same with proper reason for not following vendor list. For other items for which sub vendors are not specified, bidder can follow their standard vendors. However, they have to ensure the Proven Track record of the sub vendors and Bidder to take prior approval of BHEL for the same.

12.0.0 DOCUMENTATION:

12.1.0 MASTER DOCUMENT LIST: Refer Annexure-16

- A master documentation shall be prepared during kick off meeting identifying all the DOCUMENTS / DRAWINGS to be submitted by the bidder as part of documentation. Bidder shall ensure submission of all documentation as per approved Master Document List.
- Bidder to note that the dates of submission of all the documents shall be finalized based on PO date. It shall be solely bidder's responsibility to get approval on the entire document from purchaser to meet project schedule.

12.2.0 DRAWING APPROVAL / REVIEW CATEGORY:
The master document list shall clearly identify the class of review to be performed against each document.

Following classes of review shall be followed for all the documents engineered by the bidder

- APPROVAL (A): Approval is mandatory and bidder cannot proceed without obtaining Purchaser's approval.
- INFORMATION / RECORDS (I): This type of documents shall be submitted to Purchaser for his information. Bidder can proceed if Purchaser's comments are not received within 14 working days of receipt in Purchaser's office.

12.3.0 DRAWINGS REVIEW & APPROVALS:

12.3.1 Each drawing submitted by the bidder shall be with a title bock furnished by BHEL during detailed engg stage.

12.3.2 All drawings / documents shall be thoroughly checked, duly signed, and stamped by the vendor including drawing /documents of sub-vendor, before submission to BHEL. Documents, which are unchecked, unsigned, and without revisions marked clearly, shall be returned without review. Any delay on account of this shall be to the vendor's account. After first review of documents, vendor to submit all the further revisions of documents along with comment resolution sheet. Successive documents submitted without comment resolution sheet shall be returned without review.

12.3.3 The approval and /or review by BHEL /End customer shall not be construed by the bidder as limiting any of his responsibilities and liabilities for mistakes and deviations from the requirements, specified under these specifications and drawings.

12.3.4 Documents once reviewed in Code-1 shall not be submitted (incorporating some changes) again for review, however if some change is really necessary, the same shall be brought to the notice of BHEL separately through design change note for review / information. Finally As –built drawings, duly updated, shall be submitted.

12.3.5 During detailed engg stage, BHEL shall furnish check list reg minimum contents in GA drawing. Bidder to submit GAD [duly incorporating all requirements as per the check list] along with signed checklist. GAD shall not be reviewed without duly filled in checklist signed by the bidder.

12.4.0 NO. OF COPIES OF EACH DOCUMENT TO BE FURNISHED:

All the documents shall be submitted as given below:

SL NO.	DESCRIPTION	NO. OF COPIES / PIECES TO BE SUBMITTED	WHEN TO SUBMIT
1)	Initial drawings/documents under approval and information category.	Soft copy only	Within 2 weeks of placement of order
2)	BHEL shall furnish their observation on submitted documents	Soft copy only	Within 2 weeks of document submission
3)	*Revised drawings/documents along with compliance sheet incorporating all BHEL comments. *Vendor to incorporate all BHEL comments so that further revisions can be minimized.	Soft copy only	Within 1 weeks of receipt of commented Drawings from BHEL
4)	BHEL shall furnish their observation on submitted documents	Soft copy only	Within 2 weeks of document submission
5)	Final Drawings/documents	12	Within 2 months of placement of order.
6)	Erection Documentation	5	1 month before dispatch of equipment. The list of documents identified under master document list for erection to be furnished in 5 no's of folders
7)	Draft O & M Manuals for BHEL review. Note: Bidder to furnish final hard copy of O&M only after getting concurrence on soft copy.	Soft copy	At least 2 months before the delivery date of equipment
8)	Revised O & M Manuals with Test Certificates to be submitted to BHEL (Hyderabad)	12	Within one month before the delivery date of equipment

9)	Final O&M manuals in a CD	4	Within one month after dispatch of equipment after BHEL concurrence on soft copy.

NOTE: The O&M manuals shall contain the following as minimum:

1) The identification details of the equipment like BHEL P.O. No., Vendor's Job Identification No., full contact address with telephone, fax, & e-mail details.
2) Brief description of the system.
3) All approved documents [Drawings, documents & test procedures as per MDL]
4) Bill of material, BBU, LO schedule, sub vendor list, Mandatory & commissioning spares list etc.
5) Operation, Instruction & maintenance manuals of all equipment / items for the complete package
6) System unloading, storage erection, start up, commissioning, shut down requirements.
7) Operational & environmental safety instructions.
8) Test reports and certificates.
9) Catalogues of the equipment & instrumentation.

13.0.0 PRICE BID FORMAT:

Bidder to indicate his offer as per Price Bid format enclosed as Annexure-3.

All the items included in the price bid format shall be quoted as per tender specification and pre-bid clarifications as per annexure-15, if any. Responsibility of ensuring correctness & completeness of scope of supply as per specification requirement solely lies with bidder.

The equipment supplied shall be complete in all respects. The bidder shall not be eligible for any extra payment in respect of such mountings, fittings, fixtures and accessories if required for the safe and reliable operation of the equipment. Any additional equipment, material, etc., which are not specifically mentioned here, but are required to make the supplied equipment complete in all respect, in accordance with the intent of this technical specification, contractual agreement, statutory requirements, relevant/applicable codes/standards, good engineering practices, and for safe and trouble-free operation, shall be deemed to be in bidder scope Only.

Main offer consists of those items which will be part of main order after successful bidder is identified. Optional Items consists of those items which need to be quoted by bidder but may or may not be ordered by BHEL. Bidders are instructed to provide the pricing details listed under Main offer and Optional items as per the prescribed format. Prices quoted by the bidder shall remain firm till the successful handing over of the entire package to end customer. Any request for upward revision of price during any intermediate stage before handing over the plant to end customer will be summarily rejected by BHEL.

The Priced Bid shall be submitted in Original (without any copy) duly signed and stamped on each page in a separate sealed envelope super scribing "Price Bid –Do not Open" This shall not contain any condition whatsoever failing which the Bids shall be liable to be rejected. In case of any correction, the bidder shall put its signature and its stamp. Eraser fluid will not be allowed for making any correction.
Bidder shall confirm to the un-priced bid as part of their offer.

14.0.0 PRE-BID CLARIFICATIONS & DEVIATIONS:

14.1.0 Bidders shall comply with various requirements of this specification. It may please be noted that the requirements specified here in this specification are the standard practices being followed by the bidders. However, same things are presented in a structured form so that it can be ensured that the requirements of ultimate customer are complied with.
14.2.0 Bidders can bring out only those deviations which are impractical to meet, for our review in pre bid clarification only.
14.3.0 Bidders may also please note that the data sheets for, valves, instruments etc., submitted along with the offer will be considered as indicative only, as the requirements specified in the specification are standard in nature. These will not be reviewed by BHEL before award of contract. Same will be reviewed during order execution stage in line with the requirements of specification and agreed deviations.
14.4.0 All pre-bid clarifications & deviations shall be clear bring as per annexure- 14 & 15. Only.
14.5.0 In case bidder doesn't bring any clarification/deviation in pre bid stage , the same shall be brought in their offer with following conditions:
a) Any deviations to Customer specifications, same are acceptable provided these deviations are also regularly accepted by Customer for their direct orders on bidders. During detailed engineering stage if it is found that any deviation brought out by bidder is not a regular deviation accepted by Customer, the particular deviation brought out by bidder will not be considered as an acceptable deviation.
b) Bidders may please note that unless the deviations are specifically brought out under deviations clause, it will be considered that no deviations are taken, even if they are mentioned elsewhere directly/indirectly in the offer.

c) Price implication due to non-acceptance [by BHEL/Customer] of the deviations asked by bidder shall not be acceptable by BHEL.

5.0.0 ANNEXURES:

Following input documents and specifications are enclosed to facilitate the bidder to furnish the offer and ensure compliance:

Annexure No.	Description
01	P&ID for Pump & Drive assembly, Piping specifications and Support Details
01A	Steel Structures for Panels and Diesel tank
02	Pump-Motor-Engine datasheet
03	Price Bid Format
04	Check List
05	Customer specification for fire pumps
06	Customer spec for General electrical equipment
07	Technical spec for AC-DC motors
08	Inspection & Testing
09	Quality Plan, Guidelines and format.
10	Miscellaneous Information from customer specification
11	Painting procedure.
12	Sub Vendor List
13	Experience Record Proforma
14	Deviation Schedule
15	Pre Bid clarification format
16	Master document list
17	C&I specification

RECORD OF REVISIONS				
Rev. No.	**Date**	**Revision Details**	**Revised By**	**Approved By**
00	08.05.17	First Issue	OM	M SIVA PRASAD BABU

ANNEXURE – 01

(P&ID for Pump and Drive Assembly, Structure Support and Piping Specification Details)

FIRST ANGLE PROJECTION

(ALL DIMENSIONS ARE IN mm)

ANNEXURE-1

NOTE: THIS IS JUST A TYPICAL SCHEMATIC. BIDDER TO SUPPLY ALL THE NECESSARY EQUIPMENTS REQUIRED FOR THE SMOOTH FUNCTIONING OF PUMP,MOTOR & DIESEL ENGINE.

1. SCOPE OF BATTERY AND BATTERY CHARGER, DIESEL ENGINE CONTROL PANEL, FUEL TANK ARE IN SCOPE OF PUMP GROUP. HOWEVER FOR DETAILS REGARDING SCOPE OF SUPPLY PLEASE REFER CLAUSE 4.0.0 OF PEMC 06481

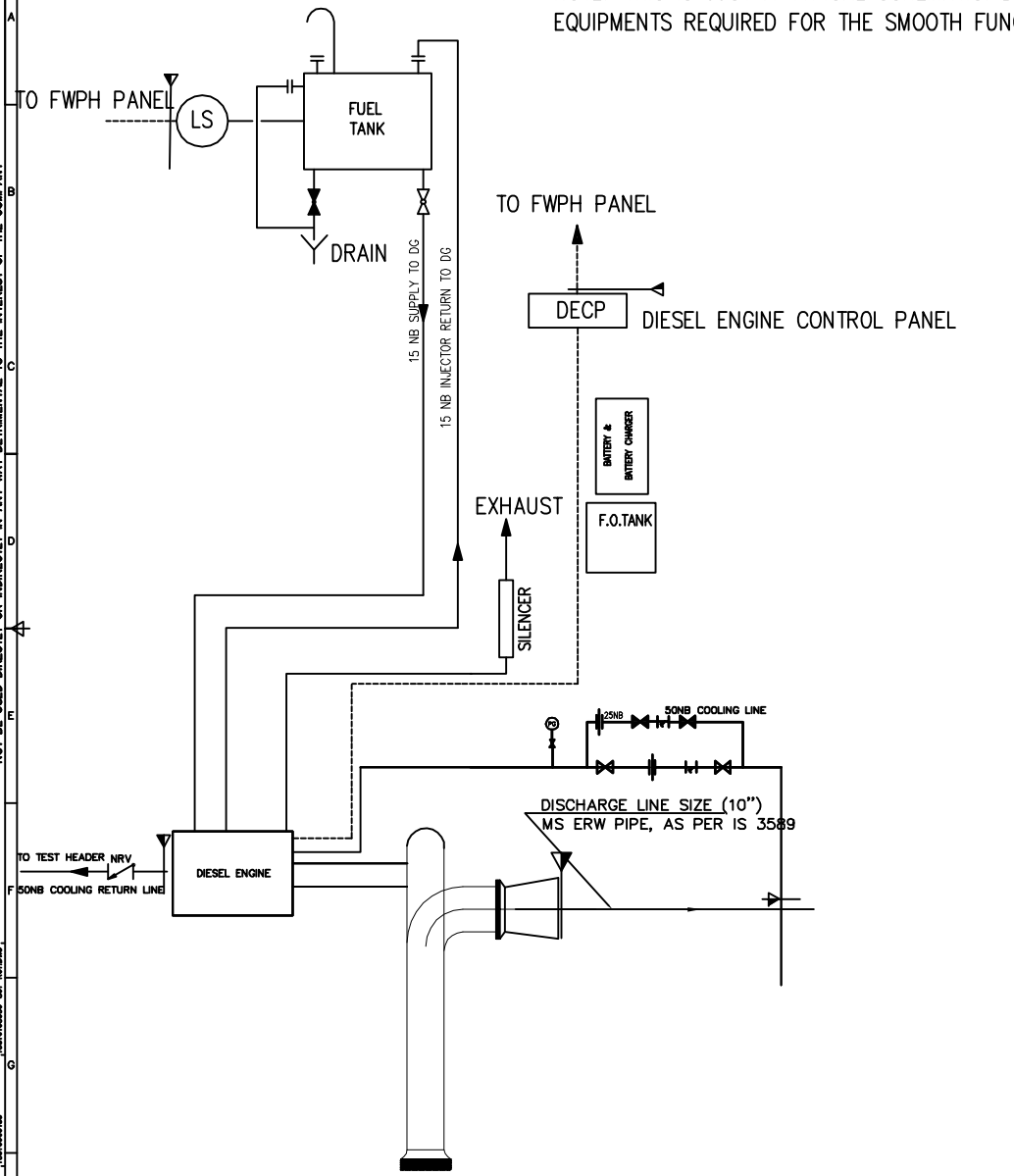

TYP. FOR ENGINE DRIVEN HYDRANT-SPRAY PUMP

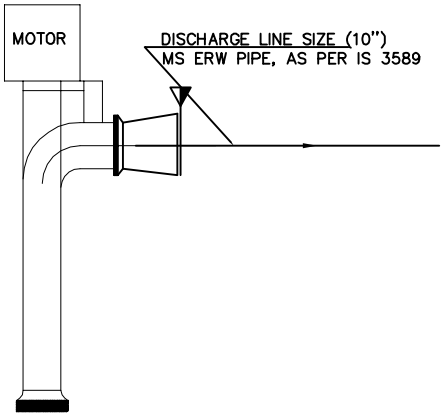

TYP. FOR MOTOR DRIVEN HYDRANT-SPRAY PUMP

SCOPE DEMARCATION

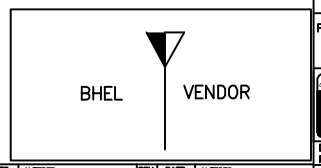

CUSTOMER:	TSGENCO				
PROJECT:	4 X 270 MW BHADRADRI TPS				
BHARAT HEAVY ELECTRICALS LTD. HYDERABAD		NAME	SIGN.	DATE	NO.OF VAR.
	DRN.	AVIRAL	-SD-	18.08.15	N.A.
	CHD.	AMIT	-SD-	18.08.15	
	APPD.	K GUNJAN	-SD-	18.08.15	
DEPT. PE&SD CODE 450	UNTOL. DIMS. GR. g/M/f	SCALE N.T.S	WEIGHT (KG) N.A.	REF. TO ASSY. DRG. N.A.	ITEM NO. N.A. / NO.OF ITEMS N.A.
TITLE: SCHEME FOR HYDRANT AND SPRAY PUMP		CARD CODE NA	DRG. NO. PESD/BHD/001		REV. 00
			CUST. DRG. NO.		
			SHT. No 01	NO. OF SHT. 01	

REV.	DATE	ALTERED CHD/APPD	REV.	DATE	ALTERED CHD/APPD	REV.	DATE	ALTERED CHD/APPD	REV.	DATE	ALTERED CHD/APPD	REV.	DATE	ALTERED CHD/APPD	REV.	DATE	ALTERED CHD/APPD	REV.	DATE	ALTERED CHD/APPD	REV.	DATE	ALTERED CHD/APPD
ZONE			ZONE			ZONE			ZONE			ZONE			ZONE			ZONE			ZONE		

THE INFORMATION ON THIS DOCUMENT IS THE PROPERTY OF BHARAT HEAVY ELECTRICALS LIMITED. IT MUST NOT BE USED DIRECTLY OR INDIRECTLY IN ANY WAY DETRIMENTAL TO THE INTEREST OF THE COMPANY

COMPUTER FILE NAME 139101030930-501-R001.DWG

REF. DRG. NO. 139100000138

SIGN. AND DATE

INVENTORY NO

MOTOR DRIVEN PUMP

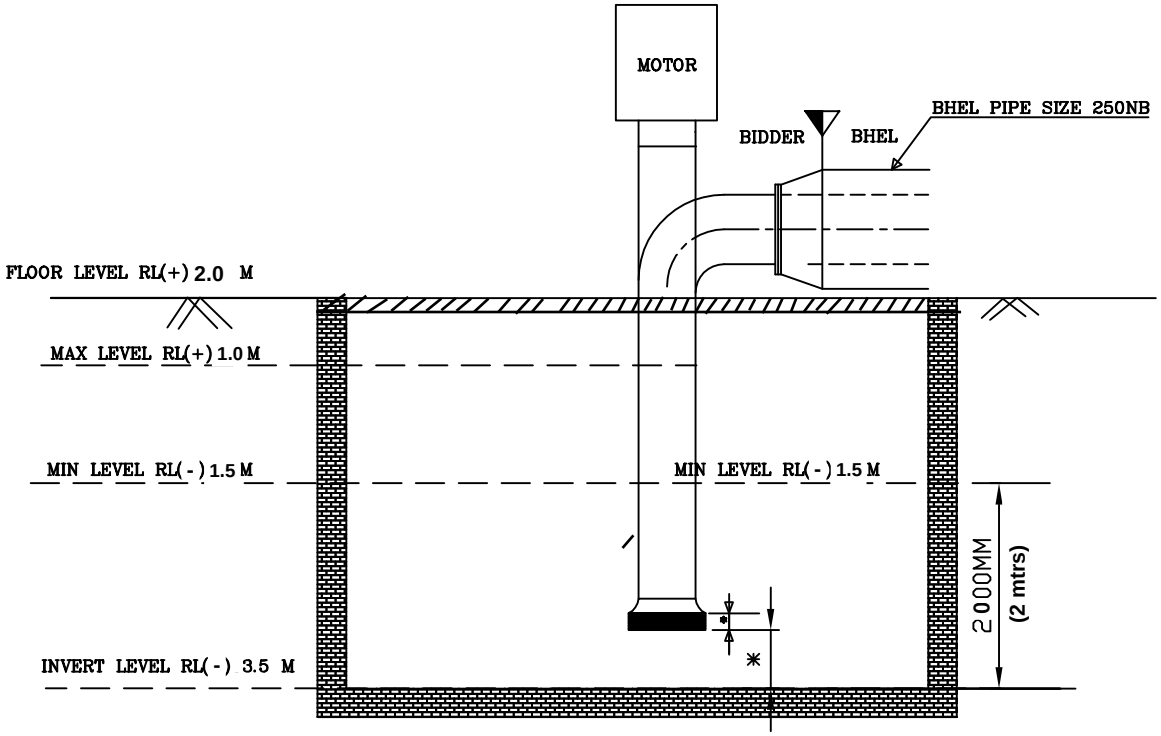

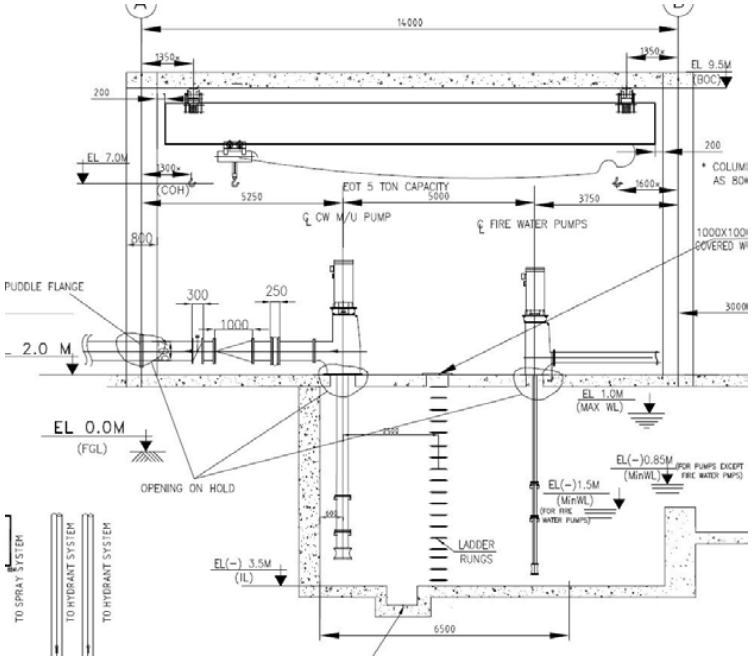

Sump Detail

Note : a) Bidder to select Pump such that the Min submergence level lies below the Min level.
b) Bidder to confirm that the Pump can be lifted with the given crane hook level elevation.
C) Crane capacity is 5 Ton for maintenance of the Pumps. Bidder to Comment.

* Bidder to furnish.

DIESEL ENGINE DRIVEN PUMP

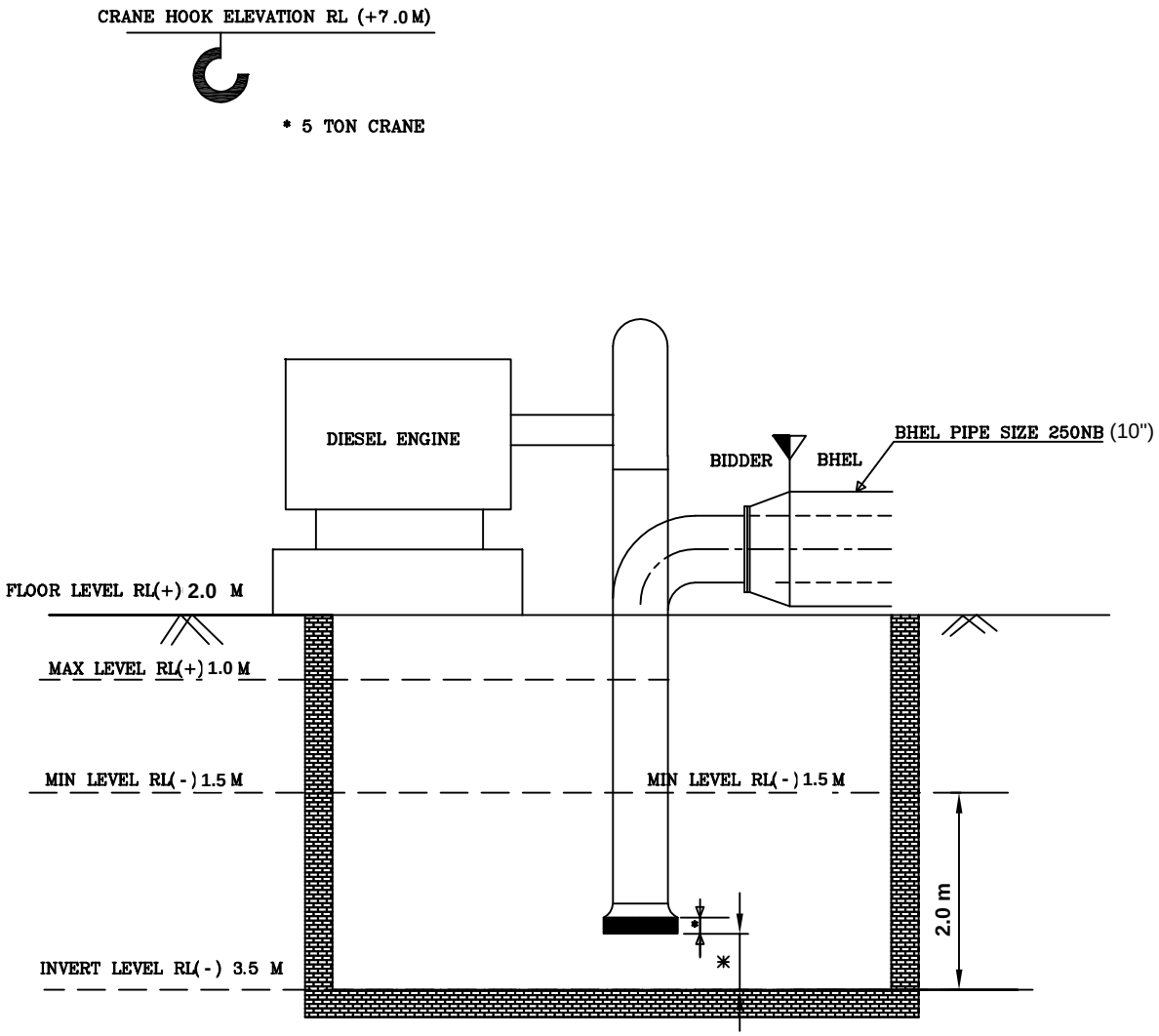

Note : a) Bidder to select Pump such that the Min submergence level lies below the Min level.
b) Bidder to confirm that the Pump can be lifted with the given crane hook level elevation.
C) Crane capacity is 5 Ton for maintenance of the Pumps. Bidder to Comment.

* Bidder to furnish.

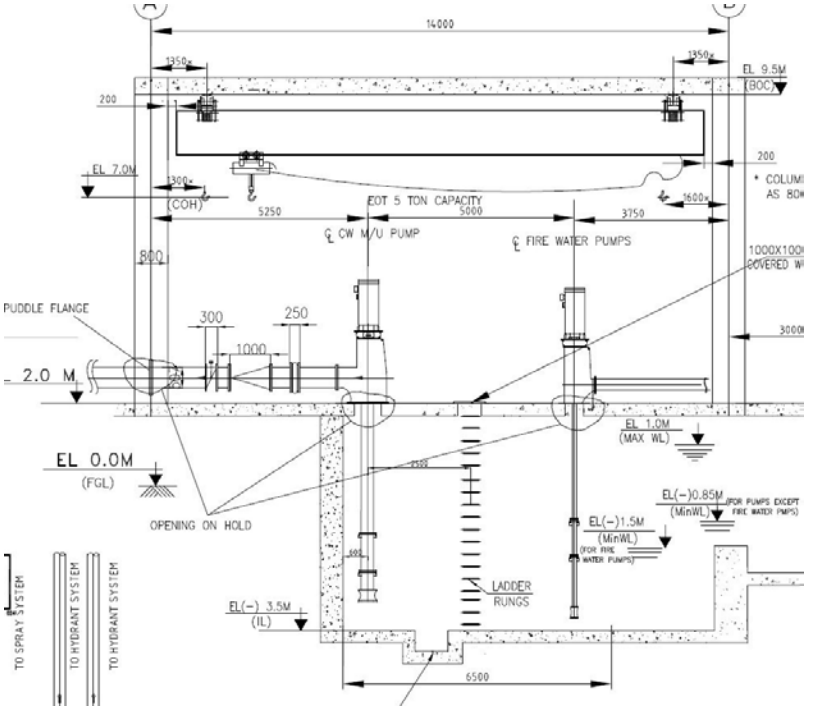

Sump Detail

ANNEXURE – 01A

(Steel Structure for Panels and Diesel Tank)

FIRST ANGLE PROJECTION

(ALL DIMENSIONS ARE IN mm)

DRG. NO. PEMC-06747

SH.16 OF 16

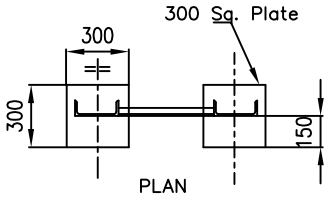

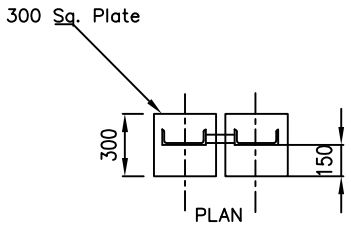

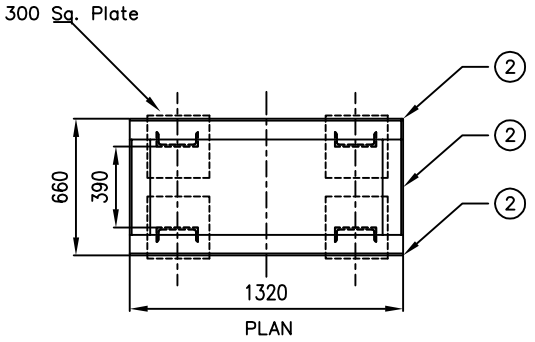

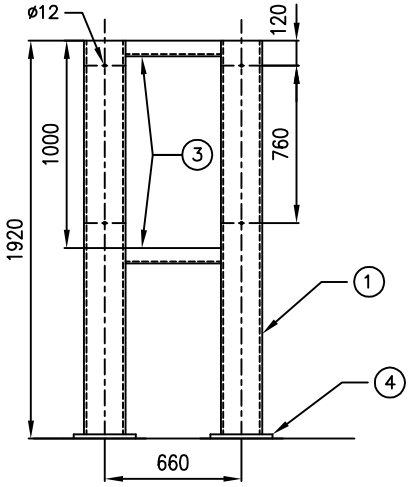

STEEL SUPPORT
FOR CONTROL PANEL

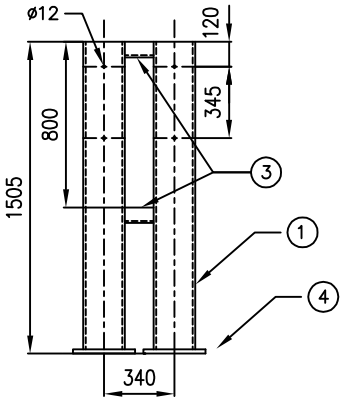

STEEL SUPPORT
FOR BATTERY
CHANGEOVER SYSTEM

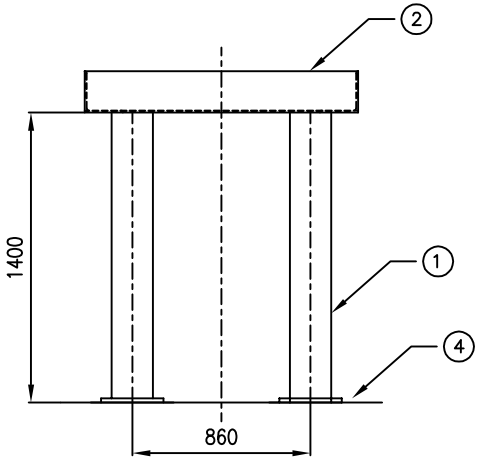

STEEL SUPPORT
FOR DIESEL TANK

ITEM	DESCRIPTION
1	ISMC 200
2	ISA 100X100X10
3	ISA 75X75X8
4	PLATE THK 10

NOTE:
ALL SUPPORTS SHALL BE EMBEDDED IN CONCRETE SUITABLY.

THE INFORMATION ON THIS DOCUMENT IS THE PROPERTY OF BHARAT HEAVY ELECTRICALS LIMITED. IT MUST NOT BE USED DIRECTLY OR INDIRECTLY IN ANY WAY DETRIMENTAL TO THE INTEREST OF THE COMPANY

COMPUTER FILE NAME

REF. DRG. NO.

SIGN. AND DATE

INVENTORY NO

GENERAL DIMENSIONAL LIMITS,FITS & TOLERANCES AS PER HY0230261

JCS

REV.	DATE	ALTERED	REV.	DATE	ALTERED	REV.	DATE	ALTERED RKJ
		CHD/APPD			CHD/APPD	01	29.03.17	CHD/APPD GIRISH/MSB
ZONE			ZONE			ZONE		

ANNEXURE – 02

(Pump-Motor-Engine datasheet)

CUSTOMER:TELANGANA STATE POWER GENERATION CORPORATION (TSGENCO)
CONSULTANT: M/S DEISEIN INDIA PVT LTD
PROJECT: BHADRADRI THERMAL POWER STAION 4 x 270 MW

DATA SHEET FOR HYDRANT-SPRAY WATER PUMP - MOTOR - DIESEL ENGINE

Sl.no	Description	BHEL Requirement	DETAILS
GENERAL DATA			
1	Service	**Hydrant Pump** : For supplying water to Hydrant header from the fire water storage sump **Spray water Pump** : For supplying the water to the spray water system from the Fire water storage sump.	
2	Number of Pumps	Total : 8 Nos. 5 Nos. for Hydrant Pump[3W+2S][3 No. Motor + 2 No. Engine driven] 3 Nos. for Spray Pump[2W+1S] [2 No. Motor + 1 No. Engine driven]	
3	Location	Indoor, Fire Cum Clarified Water Pump House	
4	Duty	Intermittent. However pump shall be suitable for continuous operation.	
5	Drives	Motor & Diesel Engine	
6	Pumping fluid	Water	
7	Fluid temp Deg C	Ambient	
10	Elevation for top of intake structure ie. FFL	RL (+) 2.0 M	
11	Elevation of sump invert level	RL (-) 3.5 M	
12	Sump depth (Top of intake structure to sump invert level)	5.5 M	
13	Distance between bottom of Pump bell mouth to sump invert level	Bidder to furnish	
14	Distance between bottom of Strainer to sump invert level	Bidder to furnish	
15	Distance between Pump first stage impeller eye to sump invert level	Bidder to furnish	
16	Pump internal losses (assumed)	Max. 0.5 MWC. Bidder to furnish exact data	
17	Elevation of sump minimum level	RL (-) 1.5 M (Refer Annexure-1) (2 mtrs above invert level)	
18	Elevation of sump maximum water level	RL (+) 1.0 M (Refer Annexure-1)	
19	Elevation of minimum submergence level	Same shall be as per HIS. Bidder to furnish	
20	Crane hook level	RL (+) 7.0 M. Bidder comment on the crane hook level	
PUMP PERFORMANCE & OTHER DETAILS [F			
8	Pump Type	Vertical Turbine,Centrifugal type	
9	Design Standard of pump	HIS/IS 5120/ Equivalent standard The pumps shall comply with the regulations of Tariff Advisory Committee (TAC).	
10	Rated Flow (m^3/hr)	410	
11	Rated Differential Head (mlc) at discharge nozzle	115	
12	Inline with TAC requirement,Pumps shall be capable of furnishing not less than 150 % of rated capacity at a head of not less than 65 % of the rated head. Bidder to confirm.		
13	Temperature of pumping fluid	Ambient	
14	Pump Model No.	Bidder To Furnish. Pump model shall be same for both Motor & Engine driven pump	
15	No. of Stages of pump	Bidder To Furnish	
16	Parallel operation	Yes. Load sharing between Pumps:Not exceeding 5% over entire operating range when operating in parallel with other pumps	
17	Rated Speed of Pump (rpm)	1500	
18	Rated speed of Motor (rpm)	1500	
19	Rated speed of Engine (rpm)	1500	
20	Pump Efficiency in %	Bidder To Furnish	
21	Minimum Available Pressure at Suction of Pump mlc	10.5 mwc	
22	NPSH(A) at pump suction nozzle (mlc)	9.4 mwc	
23	NPSH(R) (mlc)	Bidder to furnish.	
24	NPSH(A) - NPSH(R)	Minimum 1 m of margin between NPSH(A) & NPSH(R) to be maintained.	
25	Pump shut off head.	Flow vs Head curve shall be continuously rising towards shut-off head.	

Sl.no	Description	BHEL Requirement	DETAILS
26	Pump shut off head/rated head.	Shall be continuously rising towards shut-off head. Shall not be exceed 140% of rated head inclusive of all tolerance,as per TAC.	
27	BEP of the offered pump, m3/Hr	Bidder To Furnish	
28	Thermal minimum flow , m3/Hr	Bidder To Furnish	
29	Stable minimum flow, m3/Hr	Bidder To Furnish	
30	Pump End of the curve flow, m3/hr	Bidder To Furnish	
31	Impller type	Bidder To Furnish	
32	Pump rated impeller dia, mm	Bidder To Furnish	
33	Pump max. impeller dia, mm	Bidder To Furnish	
34	Pump minimum impeller dia., mm	Bidder To Furnish	
PUMP CONSTRUCTION FEATURES			
35	Material of Construction: Casing : 2.5% Ni CI as per IS:210 Gr.FG 260 Casing liner : 2.5% Ni CI as per IS:210 Gr. FG 260 Impeller : ASTM - A 743 GR. CF 8 M Wearing rings : SS-304 Pump shaft : AISI 410 (Hardened) Line shaft/shaft sleeve: SS410 Gland : 2.5% Ni CI as per IS:210 Gr.FG 260 Base plate : Carbon Steel as per IS-2062 Wetted Fasteners : SS-316 Mechanical Seal : As per Manufacturer's Standard Companion Flange : ASTM A105 All hardware underground: SS316 ****Bidder to confirm that the casing material mentioned above shall cater to the max. discharge pressure(i.e Pressure at shut off condition) including all tolerance.If Not, bidder to consider superior material of casing.**		
36	Sealing arrangement	Cartridge type Mechanical seal as per Manufacturer's Standard	
37	Flushing Plan		
38	Cooling Plan		
39	Vendor shall clearly indicate the type of cooling system adopted. In case water is used as a cooling media [for pump/motor/engine] by tapping of the water from the pump discharge (before the pump discharge valve), the capacity of the pump shall be increased, so that the net capacity meets the specification requirement.. All piping, valves, strainer, instruments etc. required for this purpose shall be provided by the vendor.		
40	Type of axial thrust balancing arrangement		
41	Type of main bearings for pump		
42	Main bearings lubrication		
43	Type of thrust bearings for pump		
44	Thrust bearing lubrication		
45	Direction of rotation of Pump		
46	Direction of rotation of Motor		
47	Direction of rotation of Engine		

Sl.no	Description	BHEL Requirement	DETAILS
COUPLING BETWEEN PUMP & MOTOR			
48	Coupling standard	Manufacturer Standard	
49	Type of coupling	Metallic, non-lubricated, flexible element type (i.e. either diaphragm or disc type) with spacer [The spacer nominal length shall be at least 125 mm and shall permit removal of the coupling, bearings, seal and rotor, as applicable, without disturbing the driver or the suction and discharge piping.]	
50	Non sparking type couplign guard	Yes	
51	Service factor for the coupling	1.5	
COUPLING BETWEEN PUMP & GEARBOX			
52	Bidder to furnish details		
COUPLING BETWEEN GEARBOX & ENGINE			
53	Bidder to furnish details		
PERFORMANCE TEST STANDARD FOR PUMPS			
54	Performance test standard	The testing Standards of the Pumps shall be as per clause no 8.3.0 of PY-AS-4-M078-8682-01. Performance tolerance shall be as mentioned below: a) Rated head at rated flow: Zero negative tolerance b) Shut-off head: Zero negative tolerance. 5% Positive tolerance permitted. c) Rated BKW: Positive tolerance permitted till selected motor rating meets end of the curve condition	
55	Maximum Allowed Working Pressure (MAWP) in Kg/cm2 g		
56	Hydraulic test pressure of casing Kg/cm²(g)	Hydraulic test pressure of casing shall be 1.5 times the MAWP.Test duration shall be minimum 1 hour	
57	Noise level for Pump	85 DBA at 1 m distance, in any direction	
58	Vibration for Pump	As ISO 10816	
PUMP TERMINAL POINT DETAILS			
59	Pump Suction nozzle - Size - Rating - Standard - Facing - Location		
60	Pump Discharge nozzle - Size - Rating - Standard - Facing - Location		
61	Pump Cooling water inlet/outlet sizes - Size - Rating - Standard - Facing - Location		
62	Vent/Drain connection: 1.Vent with 3 way SS isolating valve 2.Drain connection with valve		

CUSTOMER:TELANGANA STATE POWER GENERATION CORPORATION (TSGENCO)
CONSULTANT: M/S DEISEIN INDIA PVT LTD
PROJECT: BHADRADRI THERMAL POWER STAION 4 x 270 MW

Sl.no	Description	BHEL Requirement	DETAILS
MOTOR DETAILS FOR MOTOR DRIVEN PUMPS [For Details please refer annexure-6 & TAC guide lines]			
63	Drive	Motor	
64	BKW at the rated point		
65	BKW at end of curve		
66	Slected drive rating in kW: Motor name-plate rating at 50 Deg C shall have at least 10% margin respectively over the input power requirement of the driven equipment at rated duty point.	Bidder to mention motor kW rating for the motor duly taking care of the requirements.	
67	Design Standard of Motor	IS 325	
68	Manufacturer	BHEL Bhopal Only.	
69	Ambient Temperature	50 Deg C All motors shall be designed to operate in humid atmosphere with a maximum ambient temperature of 50 Deg C.	
70	Area classification for motor	Safe Area	
71	Rated Voltage & Frequency	6.6kV & 50 Hz	
72	Permissible variations in Voltage/Frequency/Combined	(+/-)/10%/(+/-)/5%/(+/-)/10%	
73	No of poles / synchronous speed	4/1500 rpm	
74	Energy efficient class		
75	Starting Current as % of FLC	600% subject to IS tolerances.	
76	Method of Starting	Motor shall be capable of starting with DOL	
77	Method of cooling	IC 411(TEFC) /IC 511(TETV) /IC 611(CACA) / (CACW)	
78	Class of Insulation & Temp. rise	Class F with Temperature rise ltd. to class B	
79	Space Heater	Required for all motors 30 kw and above	
80	Degree of protection/Canopy Required	IP 55/Yes	
81	TB Short time-Current & Short time-Time	40 kA , 0.25 Sec	
82	TB To be provided on the right hand side as viewed from the drive end.		
83	Cable, Cable glands & Lugs	Pl refer annexure-6. Accordingly suitable double compression Nickel plated brass cable glands and Tinned copper lugs to be provided by the bidder.	
84	No. of Starts	Two hot starts in succession with motor initially at normal running temperature.	
85	Bearing RTDs, Winding RTDs & TGs	a) Twelve (12) nos. simplex type winding temperature detectors, four (4) nos. per phase. b) Duplex type temperature detectors for each bearing c) 1 No. Dial Type Thermometer with adjustable alarm contact for each bearing. The temperature detector mentioned above shall be resistance type, 3 wire, platinum wound, 100 Ohms at 0 Deg C.	
86	Noise	85 DBA at 1 m distance, in any direction	
87	Vibration	As per IS12075/IEC 60034-14	
DIESEL ENGINE DETAILS FOR ENGINE DRIVEN PUMPS [For details pl refer Annexure-5 & TAC guide lines]			
88	Drive	Diesel Engine	
89	BKW at the rated point		
90	BKW at end of curve		

CUSTOMER:TELANGANA STATE POWER GENERATION CORPORATION (TSGENCO)
CONSULTANT: M/S DEISEIN INDIA PVT LTD
PROJECT: BHADRADRI THERMAL POWER STAION 4 x 270 MW

Sl.no	Description	BHEL Requirement	DETAILS
91	Slected drive rating: The continuous engine brake horse power rating (after accounting for all auxiliary power consumption) at the site conditions shall be at least 20% greater than the brake horse power required to drive the pump at it's duty point at rated R.P.M. and in no case less than the brake horse power required to drive the pump at 150% of rated discharge or at any condition of operation of pump. Deaerating Factors considered by the manufacturer to arrive at the shaft power of the diesel engine at site, shall not be less than the following for normally aspirated engines only: a) 3% for each 305 metre elevation above MSL (Ref. NFPA, Volume-2, 1978). b) 1% for each 5.6° C rise in air temperature above 15.6° C (Ref. NFPA, Volume-2, 1978).	Bidder to mention engine HP rating for the motor duly taking care of the requirements.	
92	Drive Standard	IS -10000, BS- 5514 and as per standard practice of diesel engine manufacturer's association of USA. Selection, Design and construction of the diesel engine shall be guided by the TAC recommendations.	
93	Name of Manufacturer	Bidder to furnish.	
94	Model No	Bidder to furnish.	
95	Duty	Intermittent. However, same shall be capable of operating continuously on full load at the site elevation for a period of six hours.	
96	Speed		
97	Type of cooling		
98	Noise	105 DBA at 1 m distance, in any direction	
99	Vibration	As per IS standard	
Gear Box [Applicable for Diesel Engine Driven Pump]			
100	Design Standard	Gear drive conforming to approval standard of Factory Mutual system or right angled gear drive class no 1338 all to be used between pump & Diesel engine.	
101	Make	Bidder to furnish	
102	Model No.	Bidder to furnish	

ANNEXURE – 03

(Price Bid Format)

	BHARAT HEAVY ELECTRICALS LIMITED **R.C.PURAM, HYDERABAD-502032**				
	PROJECT ENGINEERING & SYSTEMS DIVISION				
	PRICE FORMAT (R00) FOR HYDRANT AND SPRAY WATER PUMP WITH DRIVES **(MOTOR & DIESEL ENGINE)** **FOR PROJECT: BHADRADRI THERMAL POWER STAION 4 x 270 MW** **CUSTOMER: TELANGANA STATE POWER GENERATION CORPORATION (TSGENCO)** **CONSULTANT: M/S DEISEIN INDIA PVT LTD**				
SL NO	ITEM DESCRIPTION	QTY	UNIT	UNIT RATE (RS.)	TOTAL (RS.)
	Bidder's Name : <Bidder to indicate> **Bidder's Offer No. & Dt. : <Bidder to indicate>** **Bidder's Ref No. & Dt. :<Bidder to indicate>** **BHEL Enq. No. & date :<Bidder to indicate>**				
I	**MAIN OFFER** **[Note:Prices for individual items to be quoted as indicated in the price bid format.]**				
A	**MATERIAL SUPPLY: HYDRANT-SPRAY WATER PUMP WITH MOTOR**				
A.1	Hydrant and Spray water Pump along with drive motor assembly complete with all accessories as per specification.	5	Set		
A.2	**Commissioning spares**				
	Commissioning spares as per manufacturer's recommendation. Minimum 1 Set of O rings & gaskets, for each pump & 1 Set of Comissioning spares for drive as per Manufacturer recommendation. 1 set stands for requirement for one no. of pump and drive assembly Bidder to furnish the list along with the offer. **(Ref. Note-7)**	5	Set		
B	**MATERIAL SUPPLY: HYDRANT-SPRAY WATER PUMP WITH DIESEL ENGINE**				
B.1	Hydrant pump-Spray water Pump along with Diesel Engine Complete with all accessories as per specification.	3	Set		
B.2	**Commissioning spares**				
	Commissioning spares as per manufacturer's recommendation. Minimum 1 Set of O rings & gaskets, for each pump & 1 Set of Comissioning spares for drive as per Manufacturer recommendation. 1 set stands for requirement for one no. of pump and drive assembly Bidder to furnish the list along with the offer. **(Ref. Note-7)**	3	Set		
C	**Special tools & tackles**				
C.1	**Special tools & tackles for Pump and Motor**				
	Special tools & tackles as per manufacture recommendations. 1 set stands for requirement for each pump, drive and other accessories. Bidder to furnish the list along with offer.	1	Set		
C.2	**Special tools & tackles for Pump and Diesel Engine**				
	Special tools & tackles as per manufacture recommendations. 1 set standas for requirement for each pump, drive and other accessories. Bidder to furnish the list along with offer.	1	Set		
D	**MANDATORY SPARES:** **Note:Prices for individual items to be quoted as indicated in the price bid format.[Refer Note 8]**				
D.1	**For Pumps:**				
	a) Complete bowl assembly	1 set			
	b) Set of Impellers	1 set			
	c) Set of Pump Shaft	1 set			
	d) Casing Wearing rings	1 set			
	e) Impeller Wearing rings	1 set			
	f) Shaft sleeves	2 set			
	g) Shaft Coupling	1 set			
	h) Shaft Nut and key	1 set			
	i) Lantern ring	1 set			
	j) Bell mouth liner	1 set			
	k) Bearing (Various types as applicable)	1 set			
	l) Pump Motor Coupling	1 set			

BHARAT HEAVY ELECTRICALS LIMITED
R.C.PURAM, HYDERABAD-502032

PROJECT ENGINEERING & SYSTEMS DIVISION

PRICE FORMAT (R00) FOR HYDRANT AND SPRAY WATER PUMP WITH DRIVES
(MOTOR & DIESEL ENGINE)
FOR PROJECT: BHADRADRI THERMAL POWER STAION 4 x 270 MW
CUSTOMER: TELANGANA STATE POWER GENERATION CORPORATION (TSGENCO)
CONSULTANT: M/S DEISEIN INDIA PVT LTD

SL NO	ITEM DESCRIPTION	QTY	UNIT	UNIT RATE (RS.)	TOTAL (RS.)
	Bidder's Name : <Bidder to indicate> **Bidder's Offer No. & Dt. : <Bidder to indicate>** **Bidder's Ref No. & Dt. :<Bidder to indicate>** **BHEL Enq. No. & date :<Bidder to indicate>**				
D.2	**For Motor:**				
	a) Bearing(Driving End)	1 No.			
	b) Bearing(Non-Driving End)	1 No.			
	c) End Shield (DE and NDE)	1 set			
	d) Cooling Fan of motors (Internal and external)	1 set			
	e) Fan cover	1 set			
	f) Bearing Temperature Gauge Driving & Non-Driving End	1 set			
	g) Phase segregated terminal box	1 set			
	h) Neutral End Terminal Bushing with Fasteners	1 No.			
	i) RTD for Bearing Temperature:	1 No.			
	j) Motor Space Heater	1 No.			
	k) Complete Set of Coupling	1 set			
D.3	**For Engine:**				
	a) Element for lub oil Filter:	2 No.			
	b) Element for Fuel Filter:	2 No.			
	c) Outer Element for Air cleaner:	2 No.			
	d) Inner Element for Air cleaner:	2 No.			
	e) Turbo-charger:	1 No.			
	f) Engine - starter Motor:	1 No.			
	g) Injector:	2 No.			
	h) Piston rings & liner set:	2 sets			
D.4	**Instrumentation:** Transmitters/ Gauges/Switches etc. along with relevant accessories: 10% of total or at least two (whichever is higher) for each type along with accessories. Temperature Element (RTD/Thermo-couple) with thermowell: 10% of each type, range and immersion length .Minimum 5 nos.				
E	**Supervison charges for erection & commissioning at site**				
E.1	Per diem rate for the supervision of Erection & commissioning of Hydrant-Spray **Pump** [Refer Note 12]	16	Days		
E.2	Travel expenses (inclusive of all other charges like visa fee (if applicable), insurance etc) from / to vendor works to site for Engineer per visit for supervision of erection & commissioning of Hydrant-spray **Pump** [Refer Note 12]	8	Visit		
E.3	Per diem rate for the supervision of Erection & commissioning of **Moto**r for Hydrant-sparay Pump[Motor driven] [Refer Note 10]	10	Days		
E.4	Travel expenses (inclusive of all other charges like visa fee (if applicable), insurance etc) from / to vendor works to site for Engineer per visit for supervision of erection & commissioning of **Motor** for Hydrant-Spray Pump [Motor driven][Refer Note 12]	5	Visit		
E.5	Per diem rate for the supervision of Erection & commissioning of **Diesel engine** of Hydrant-Spray Pump(Diesel Engine driven) [Refer Note 12]	6	Days		
E.6	Travel expenses (inclusive of all other charges like visa fee (if applicable), insurance etc) from / to vendor works to site for Engineer per visit for supervision of erection & commissioning of **Diesel Engine** for Hydrant-Spray(Diesel Enginedriven) [Refer Note 12]	3	Visit		

BHARAT HEAVY ELECTRICALS LIMITED
R.C.PURAM, HYDERABAD-502032

PROJECT ENGINEERING & SYSTEMS DIVISION

PRICE FORMAT (R00) FOR HYDRANT AND SPRAY WATER PUMP WITH DRIVES
(MOTOR & DIESEL ENGINE)
FOR PROJECT: BHADRADRI THERMAL POWER STAION 4 x 270 MW
CUSTOMER: TELANGANA STATE POWER GENERATION CORPORATION (TSGENCO)
CONSULTANT: M/S DEISEIN INDIA PVT LTD

SL NO	ITEM DESCRIPTION	QTY	UNIT	UNIT RATE (RS.)	TOTAL (RS.)
	Bidder's Name : <Bidder to indicate> **Bidder's Offer No. & Dt. : <Bidder to indicate>** **Bidder's Ref No. & Dt. :<Bidder to indicate>** **BHEL Enq. No. & date :<Bidder to indicate>**				
II	**Optional Items**				
	2 Years Recommended Spares				
	Recommended spares list for two years normal operation along with unit price breakup for Pump, Drives & other accessories. **(List with price break up to be enclosed)** (1 set stands for quantity required for the replacement of one pump, drive (or) accessories)	As per List	Set		
	TOTAL				
III TAXES AND DUTIES: **(Packing and Forwarding, Frieght, Insurance, Taxes & Duties as applicable to be quoted below separately for both Supply and E&C)**					
(A) For Supply:					
(i) Packing & Forwarding :					
(ii) Frieght:					
(iii) Insurance:					
(iv) Taxes and Duties					
(v) Any other:					
(B) For E&C:					
(i) Service Tax:					
(ii) Any other:					

Notes:

1) Bidder to quote strictly as per BHEL's NIT requirements.

2) Bidder to note that this is a LUMP SUM Turn-Key Order. However
(a) Changes to the tender specification during execution of the project for successful operation of the system need to be carried out by bidder and commercial implications if any will be settled suitably.
(b) Unit rates quoted by bidder shall be applicable for any changes in BOQ during detailed engineering stage.

3) **Main offer** consists of those items which will be part of main order after successful bidder is identified. **Optional Items** consists of those items which need to be quoted by bidder but may or may not be ordered by BHEL. Bidders are instructed to provide the pricing details listed under **Main offe**r and **Optional items** as per the prescribed format.

4) Prices quoted by bidders for items under **main offer : Sl. No. I [A to E]** will be considered for evaluation of lowest bidder.However, BHEL reserves the right
(a) To include any of the optional items in scope of supply (as per customer contract requirements) and accordingly consider the same in evaluation. Any such scope increase and change in evalution will be intimated to vendor during technical evaluation(before price bid opening).
(b) To place PO for any of the Optional items with in the contract period.
Hence bidders need to mandatorily quote reasonable prices for all optional items considering such requirement and keep the validity of the prices till the end of contract period.

5.a) For all items including Optional items, prices to be furnished in this prescribed price bid format only for each individual item. No combined prices, common prices or any other format will be accepted and such bids may be liable for rejection.
5.b) Bidder must not change the indicated item description, quantity & units in the price bid format. Bidder should only fill the unit rates & total price.
5.c) Bidder to quote for all the items as per price bid format. Incomplete/partial offer may be liable for rejection.

	BHARAT HEAVY ELECTRICALS LIMITED **R.C.PURAM, HYDERABAD-502032**				
	PROJECT ENGINEERING & SYSTEMS DIVISION				
	PRICE FORMAT (R00) FOR HYDRANT AND SPRAY WATER PUMP WITH DRIVES **(MOTOR & DIESEL ENGINE)** **FOR PROJECT: BHADRADRI THERMAL POWER STAION 4 x 270 MW** **CUSTOMER: TELANGANA STATE POWER GENERATION CORPORATION (TSGENCO)** **CONSULTANT: M/S DEISEIN INDIA PVT LTD**				
SL NO	ITEM DESCRIPTION	QTY	UNIT	UNIT RATE (RS.)	TOTAL (RS.)
	Bidder's Name : <Bidder to indicate> **Bidder's Offer No. & Dt. : <Bidder to indicate>** **Bidder's Ref No. & Dt. :<Bidder to indicate>** **BHEL Enq. No. & date :<Bidder to indicate>**				

6) Bidder to quote the base rates only. All other commercial charges for packing, freight, transportation, insurance, taxes & duties etc., shall be indicated separately.

7 a.) Commissioning spares are those spares which are required at the time of commissioning and shall be recommended(as per bidders experience) and quoted by bidder. However commissioning spares indicated in the price bid format shall be quoted as minimum.
7.b) Commissioning spare consumed over and above the recommended commisioning spares, during commissioning shall be supplied free of cost by the equipment vendor.

8)With respect to Mandatory Spares;
A) If any of above items indicated by the specified name are not applicable, bidder to offer alternative item serving the same function as per equipment's design and indicate below the item being replaced.
B) If bidder is not able to meet the above note, then bidder may mention "Not Applicable". However, if found applicable during detailed engg. stage or alternative item as per equipment design can serve the same function, bidder to supply the specified quantity with out any delivery and commercial implications to BHEL.

9) Reference document: PY51231 R06 , BHEL Spec no. **PYAS4M078868201** Rev 00 & annexures.

10) Unpriced price bid format indicating as quoted against each applicable item shall be submitted duly signed & stamped along with technical offer by bidder as a token of concurrence that prices are submitted in this format only. The offer shall be liable for rejection in case if un-priced price bid format is not submitted or any modification is carried out in price bid format.

11) **In case the systems are being supplied from outside India**, reputed Third Party Inspection like Llyods or equivalent has to be considered and the charges should be included in the Main offer. For those bidders who are supplying from India, such third party inspection charges need not be considered and same will be arranged by BHEL/BHEL nominated inspection agency.

12) With respect to Supervision charges:
Referring to Sl no E.1 TO E.2, Hydrant Booster Pump , For the purpose of L1 bidder evaluation, total no of 16 man days [2 man days for each pump] for all the Pumps will be covered in 8 visits [1 visit for each pump] have been considered. However, either or both of the number of man days or number of visits may change on either side based on the actual site requirement. Bidder to note that payment against Sl.No E.1 TO E.2 above shall be made as per the actual number of visits and man days required for the supervision of the complete E&C activities as per these diem rates.

Referring to Sl no E.3 TO E.4, Motor , For the purpose of L1 bidder evaluation, total no of 10 man days [2 man days for each motor] for Motor will be covered in 5 visits [1 visit for each motor] have been considered. However, either or both of the number of man days or number of visits may change on either side based on the actual site requirement. Bidder to note that payment against Sl.No E.3 TO E.4 above shall be made as per the actual number of visits and man days required for the supervision of the complete E&C activities as per these diem rates.

Referring to Sl no E.5 TO E.6, Diesel Engine , For the purpose of L1 bidder evaluation, total no of 6 man days [2 man days for each engine] for Diesel Engine will be covered in 3 visits [1 visit for each Diesel Engine] have been considered. However, either or both of the number of man days or number of visits may change on either side based on the actual site requirement. Bidder to note that payment against Sl.No E.5 TO E.6 above shall be made as per the actual number of visits and man days required for the supervision of the complete E&C activities as per these diem rates.

Purchase Order for supply of main items, (A to D) shall be placed by BHEL-Hyderabad.

Purchase Order for Supervison charges for erection & commissioning (Sl no E) shall be placed by BHEL-site as per the site requirement.

ANNEXURE – 04

(Check List)

ANNEXURE-4

CHECKLIST FOR OFFER FOR HYDRANT PUMP/ SPRAY WATER PUMP WITH DRIVES (MOTOR/DIESEL ENGINE)

Description	Enclosed (Yes/ No)
Bidder to confirm that Performance requirement, Design and construction of the Pump shall be guided by the TAC/LPA recommendations.	
Bidder to confirm that Performance requirement, Design and construction of the Motor shall be guided by the TAC/LPA recommendations.	
Bidder to confirm that Performance requirement, Design and construction of the Diesel Engine shall be guided by the TAC/LPA recommendations.	
Bidder to confirm to furnish duly filled Pump, Motor & Diesel Engine datasheets. **Datasheets in other formats are strictly not accepted. Bidder to furnish filled in the Datasheets as per BHEL tender enquiry only.**	
Bidder to confirm to the scope of supply as per BHEL specs Doc. No. PY-AS-4-M078-8682-01.	
Bidder to confirm that all the Suitable reducers/expanders & counter flanges along with gaskets & stud nuts at all the terminal point shall be in their scope inline with P&ID (Annexure-1).	
Bidder to furnish a list of commissioning spares (Refer Cl No. 5.14.0 of Doc. No. PY-AS-4-M078-8682-01).	
Bidder to furnish a list of special tools & tackles (Refer Cl No. 5.0.17 of Doc. No. PY-AS-4-M078-8682-01).	
Bidder's confirmation required for furnishing a list of 2 year recommended spares in their offer separately with optional price.	
Reference list/Equipment Qualification criteria as per clause No. 7.0.0 of PY-AS-4-M078-8682-01. Bidder to furnish dully filled in proforma as per Annexure-7	
Bidder to highlight specific comments on the inspection requirements wrt scope of supply. (Refer Cl no 8.0.0 of Doc. No. PY-AS-4-M078-8682-01.)	
Bidder to highlight any deviation w.r.t the sub vendor list with proper justification. (Refer Cl no 14.0.0 of Doc. No. PY-AS-4-M078-8682-01.)	
Bidder to check the master document list and submit all the required documents as per the master document list (Annexure-10) without fail and take the approval of BHEL/Customer/Consultant	
Bidders to comment on the instrumentation requirement as per P&ID (Annexure -1) based on their experience. If any other instruments are required as per good engg practice, bidder to highlight & Consider the same.	
Deviation list to the specification. All other requirements except for the deviation brought out under deviation list, have been taken into consideration.	
Bidder to quote as per BHEL price format only. Price quoted as per the price bid format, clearly indicating all the applicable items are quoted, and not applicable items are clearly highlighted. Un priced copy of the same is enclosed. [Refer Annexure-4].	
Bidder to confirm that all equipment shall be procured from the approved sub vendors listed in the bid package [Refer Annexure-9].	
Confirm that all Inspection & acceptance, type Tests as required for each equipment, as per specification and Codes attached.	
Bidder to confirm that Scope of supply shall be as per clause 5.0.0 of Doc. No. PY-AS-4-M078-8682-01.	
Bidder to consider all auxiliary equipment, instrumentation & control for Diesel Engine as per TAC and Doc. No. PY-AS-4-M078-8682-01.	
Bidder to ensure that MOC shall be per Sl. No. 35 of Annexure-2 of Doc. No. PY-AS-	

4-M078-8682-01..If any of the material mentioned doesn't cater the max. Discharge Pressure, Bidder to consider superior material.	
Bidder to furnish the filled in unpriced price bid format along with their offer as per Annexure-4.	
Bidder to quote individual price for each item mentioned in the seal priced bid. Bidder to confirm the same.	
Deviations to the BHEL tender specifications shall be clearly bought by bidder in a separate deviation list.	
All important documents such as unpriced price bid, reference list, pump performance curve, Pump & drive assembly GA drawings, CS drawings must necessarily to be furnished by bidder along with their offer.	
Bidder to raise Pre bid queries, if any, must be raised as per Attached format (Annexure-12) before submission of technical and commercial bid. Any deviation/ queries raised during technical bid submission shall not be entertained.	

SIGNATURE:
NAME:
DESIGNATION:
COMPANY:
DATE:

ANNEXURE – 05

(Customer Specification for Fire Pumps)

VOLUME-IIIE

SECTION-II

TECHNICAL SPECIFICATION FOR FIRE PROTECTION SYSTEM

CONTENT

CLAUSE NO.	DESCRIPTION
1.00.00	GENERAL INFORMATION
2.00.00	CODES & STANDARDS
3.00.00	SYSTEM DESCRIPTION
4.00.00	OPERATIONAL PHILOSOPHY
5.00.00	SCOPE OF WORK
6.00.00	DESIGN BASIS AND INPUT
7.00.00	DESIGN AND CONSTRUCTION
8.00.00	INSPECTION AND TESTING
9.00.00	DRAWINGS, DATA & MANUALS TO BE SUBMITTED BY THE BIDDER

ATTACHMENT

ANNEXURE-I	FIRE WATER PUMPS
ANNEXURE-II	DIESEL ENGINE
ANNEXURE-III	AIR COMPRESSOR
ANNEXURE-IV	FIRE WATER STORAGE TANKS & HYDROPNEUMATIC TANK
ANNEXURE-V	PIPES, FITTINGS, VAVES AND SPECIALTIES
ANNEXURE-VI	HOSE HOUSE
ANNEXURE-VII	DELUGE VALVE SHED
ANNEXURE-VIII	DETECTORS
ANNEXURE-IX	TECHNICAL SPECIFICATION FOR NITROGEN GAS INJECTION SYSTEM FOR OIL FILLED TRANSFORMER
ANNEXURE-X	FIRE TENDER

VOLUME: IIIE

SECTION-II

TECHNICAL SPECIFICATIONS FOR FIRE DETECTION, ALARM AND PROTECTION SYSTEM

1.00.00 GENERAL INFORMATION

This section covers the requirements envisaged for Fire Detection and Protection System including Alarm and Communication which will be used to control any outbreak of fire in the proposed1 x 800 MW Sri Kothagudem Thermal Power Station (KTPS), Stage-VII, Unit-12 for Telangana State Power Generation Corporation Limited (TSGENCO) at Kothagudem, Telangana to reduce consequential damages by containing and extinguishing the same. This section of the Specification shall have two parts – Fire Extinguishing System and Fire Detection & Alarm System. Bidder's scope of work covers supply, erection, commissioning and testing of the entire fire detection, alarm and protection system including supply of all fire extinguishing equipment and systems, fire detectors, manual call points, linear heat sensing cables, all local, remote Fire detection alarm cum MIMIC panels , repeater fire alarm panels, PCs and peripherals, hardware and licensed versions of software as detailed hereunder, meeting all code requirements to make the system complete.

2.00.00 CODES AND STANDARDS

The system shall be designed keeping in view the recommendations of Tariff Advisory Committee (TAC) of Insurance Companies of India/LPA India/NFPA USA. Any other International Standard having equivalent stringent codes may also be considered. However, the system shall be approved by statutory authorities.

3.00.00 SYSTEM DESCRIPTION

For protection against fire, all yard equipment will be protected by a combination of hydrant system, automatic sprinkler spray system (emulsifier system), fixed foam system for oil handling areas, automatic high velocity and medium velocity sprinkler spray system, auto-modular clean agent system for control rooms apart from portable and mobile fire extinguishers located at strategic areas of plant buildings and adequate Passive Fire Protection measures.

Fire extinguishing system is broadly divided into following sub-systems:

3.01.01 **Hydrant System**

The Hydrant System of Fire Protection essentially consists of a large network of pipe, both underground and over ground which feeds water to a number of hydrants valves – indoor as well as outdoor and to a number of outdoor type fixed installations. Water in the pipe network is kept pressurized by hydro-pneumatic tank and jockey pump arrangement. These hydrant valves are located in the entire power station including all the auxiliaries and buildings in the plant area. Hosepipes of suitable lengths fitted with standard accessories like branch pipes, nozzles etc. are kept in "Hose Houses" (for outdoor hydrants) and in "Hose Boxes" (for indoor hydrants). When the fire hoses are coupled to the hydrant valves through the instantaneous coupling, jet of water is directed towards the fire. Hydrant system protects the following building/facilities.

a) Raw Water Pump House

b) Entire Power House including Boiler Area and Turbine House.

c) Mill Building.

d) Mill reject system compressor house.

e) ESP Control Building.

f) Generator & Unit transformer, Station Transformers in transformer Yard, switchyard area.

g) CW Pump House including chlorination plant and dosing pump house.

h) DG & Compressor building.

i) HFO & LDO/ HSD unloading and transfer pump house, pressurizing pump house area, HFO, LDO/HSD Day tank area.

j) DM plant

k) Coal Handling Plant including conveyors, TPs, Coal stack yard etc.

l) Ash water pump house.

m) Ash Slurry Pump House

n) Ash Handling Plant Electrical cum Control Room

o) Ash Handling Plant Compressor Room

p) Fly Ash Vacuum Pump House

q) AHP Chemical House in AHP Clarifier Area

r) Effluent treatment Plant.

s) Stores.

t) Clarified Water Pump House

u) Filtered water Reservoir and Pump House

v) Sludge Sump & Pump House

w) Filter Backwash Waste Sump & Pump House

x) Chemical House

y) Chlorination Building

Note: Buildings not specifically identified above but required to be covered by hydrant system shall also be included in the scope of the Bidder.

3.01.02 **High Velocity Water Spray System (HVWS System)**

a) Category- A

This system shall automatically detect, control and extinguish any out-break of fire and simultaneously give audible alarm. The system shall also be designed for remote operation. Water line forms a ring around the equipment to be protected with projected outlets at various selected points fitted with the specially designed nozzles. The water supply to the HVW spray system is controlled by deluge valve, which shall be operated hydraulically. This valve is normally closed by water pressure in the water piping. The same water pipe forms a ring around the equipment to be protected and frangible bulb type detectors are mounted on this water line at selected places. When the surrounding temperature rises more than the rated temperature of the detector, detector quartzoid bulb collapses releasing water and consequently pressure in water line will fall sharply. This fall of pressure opens the deluge valve and water starts projecting out from the projectors. Local audible alarm shall be produced by water motor alarm gong. The operation of the Deluge Valve shall be annunciated in the Local Zonal Fire Alarm Panel as well as in the Central Fire detection alarm cum MIMIC panel.

The system shall also have a manual over riding facility along with regular testing facility

Category – A type HVW Spray Protection shall be provided for the following equipment:

- Three (3) nos. single phase generator transformer.
- Two (2) nos. Unit transformers.
- Unit and Station Auxiliary transformers as per design requirement.

- Spare Generator Transformer

b) Category- B

In this system fire shall be detected by use of heat detectors, flame detectors depending upon the area. Upon detection of fire, HVW Spray System shall be brought in operation automatically by opening deluge valves.

Category – B type HVW Spray System shall be provided for the following areas:

- Turbine oil tanks and purifiers.
- Boiler Firing Floors.
- Lube oil piping in turbine areas.
- Generator seal oil system.
- Lube oil system for turbine driven boiler feed pumps.
- All oil filled transformer below 10 MVA.

3.01.03 **Medium Velocity Water Spray System**

This system essentially consists of a network of sprayers fitted with a special deflector to give required angle of discharge for the water around the area to be protected. The sprayers discharge a cone of water spray consisting of medium size droplets of water. The droplet size shall be so designed to achieve efficient cooling of the flame zone by evaporation and sufficiently large to penetrate the flame so as to reach and cool surfaces heated by the fire. The operation of the deluge valves in MVW Spray System shall be annunciated in the respective local zonal panels and in the central Fire detection alarm cum MIMIC panel with repeat alarm at fire station buildings. For avoiding overall flooding of the area, in the event of fire, only the two adjacent zones on either side shall only operate.

The Medium Velocity Water Spray System shall be provided for the protection of following areas:

- All conveyor galleries, transfer points, and bunker bay conveyors in coal handling plant. In this connection, it may be noted that full length of each conveyor both top and bottom belt shall be protected with MVW Spray System.

  Spray system for coal conveyor galleries shall be divided in several zones fed through individual deluge valves. Spray system for each zone shall consist of spray nozzles mounted, on a water network. Spray system shall cover both forward and return belts of conveyor including hoppers, feeders & head end pulley. Detection system shall consist of quartz bulb detectors, IR detectors, LHS cables.

- Cable vault and cable galleries of main plant, switchyard control room, and ESP control room. Detection system shall consist of smoke detectors, LHS cables.

- Fuel oil storage and day tank area, DG set diesel tanks.

3.01.04 **Fixed Foam Protection System**

Water based automatic activated low expansion foam protection system shall be provided for HFO & LDO/ HSD storage and day tanks.

Foam protection systems are based on the principle of blanketing the burning surface of oil stored inside the tanks by pouring foam mixed with water, enabling to cut-off the oxygen to the burning fuel thus achieving immediate Extinguishments of fire.

Foam concentrate will be pumped from the foam concentrate storage tank by two (1W + 1S) foam pumps to foam proportioner skids one provided for each fuel oil (FO) tank. Pressurized water connection is provided to the eductor of each foam proportioner skid. In the event of fire, the foam system for respective tank shall be automatically activated on detection of fire by ROR/Probe type heat detectors provided inside the FO tanks. Water will start flowing through the eductor where foam concentrate is induced and mixed with the flowing water in definite proportion.

This foam water mixture flows to tank, where the foam solution expands by sucking air from the atmosphere and foam thus formed fills the oil surface inside tank by suitably designed deflectors.

3.01.05 **Inert gas flooding system / Auto modular clean agent system**

One centralized total flooding type clean inert gas extinguishing system shall be provided for the following areas as a protection for fire damage.

- Control room, Control equipment room, computer room and other electrical and electronic equipment rooms.

The inert gas flooding system for the above areas shall consist of battery of inert gas storage cylinders of adequate capacity, which shall be located suitably at a centralized location. Discharge nozzles shall be provided on the gas distribution pipe network suitably located on the areas to be protected.

In the event of fire, the fire detectors initiate an alarm in the local panel, and main fire alarm panel. Simultaneously, the detection signal opens the valves automatically and the protected area is filled up by rapid injection of required quantity of inert gas through the pipe network and discharge nozzles to create a homogenous air/inert gas atmosphere within.

The pipe network shall be connected to a gas manifold, through a manually operated valve. The manifold shall be connected to a group of inert gas cylinders

3.01.06 Portable and mobile (wheel mounted) fire extinguishers, such as soda acid type, pressurized water type, carbon-dioxide type, foam type , dry chemical powder type shall be located at strategic locations throughout the plant area.

3.02.00 Microprocessor based addressable analog type multi criteria smoke detectors connected in cross-zoning principle as per NFPA recommendation and in two wires circuitry shall be provided in the following areas:

- All cable Spreader Rooms & Cable Vaults, cable gallery in powerhouse and in all ancillary plant buildings.
- All Electrical Switchgear/MCC Rooms located in Power House and in all ancillary plant buildings.
- Central Control Rooms, Control equipment room housing DDCMIS, UPS etc. and in all ancillary plant building control rooms.

3.03.00 Heat detection system (microprocessor based analogue addressable based heat detector) shall be provided in the following areas in order to avoid spurious operation of the smoke detectors due to fumes, smoke & dust which are present in these areas:

- Battery and battery charger rooms.
- Turbine oil tanks and purifiers.
- Boiler Firing Floors.
- Lube oil piping in turbine areas.
- Generator seal oil system.
- Lube oil system for turbine driven boiler feed pumps.
- All oil filled transformer below 10 MVA.

3.04.00 Quartzoid bulb detector shall be used in all transformers rated more than 10 MVA.

3.05.00 Heat sensing cable, as detector shall be used for coal conveyor gallery including bearings and both drive pulley and non-drive pulley, transfer points. This shall be used in whole length of top belt and bottom belt (in a zig-zag fashion). These detectors shall also be used for tripping the conveyor drives.

3.06.00 Solar Blind Infra-red detectors with inbuilt air purging unit shall be used in coal conveyor gallery for detection of moving fire. Rate of rise cum fixed

temperature heat detectors shall be used for Boiler burner fronts, turbine oil tanks and HFO and LDO/HSD storage day tank inside. Heat detectors shall be analogue addressable type.

3.07.00 The entire Power House Building and the outdoor yard of plant have been divided into a number of zones with a few addressable manual call points in each zone. The outdoor call points shall be installed on approximately 1M high angle iron supports for ease of operation. The manual call points inside the Power House Building shall be suitable for wall mounting. Manual call points of "break glass push button station type" or "lever type" shall be provided specifically in the following areas:

a) Switch gear and MCC room in Power house.

b) Outdoor transformer yard.

c) All floors in power House, including Boiler House.

d) All areas of boiler house.

e) Coal bunker and coal mill area.

f) Transfer points.

g) All pump houses namely CW Pump House, Ash Water Pump House, Fire Water Pump House etc.

i) All buildings like Compressor and DG area etc.

Adequate number of manual call points along with automatic fire alarm system shall be provided for the respective areas. Location of the manual call points shall be near to the respective areas. Annunciations from the manual call points shall be received to the nearest satellite fire alarm panel and directly on the fire alarm panels located in the Control room and fire station.

3.08.00 All detectors shall be located and spaced as per NFPA-72E and shall be UL/FM approved. On receipt of impulse from the detectors, in the event of fire, suitable annunciation signals shall be exhibited in the respective repeater fire panels as well as Main and Master Fire Panels. The areas including electrical control rooms, switchgear rooms, cable vault, coal conveyors etc shall be suitably sectionalized as far as the fire detection is concerned and as such the affected Zone can also be spotted.

3.09.00 Passive Fire Protection System for all outdoor transformers and indoor transformers having rating more than 10 MVA, Cable Vault, Cable Spreader Room & Enclosed Cable Risers (Cable Shafts) shall be provided.

3.09.01 The Transformer to be protected by automatic High Velocity Water Spray System shall be separated from each other by explosion proof barrier walls of 120 minutes fire rating so that fire in one does not affect the adjacent Transformers.

3.09.02 The Cable Spreader Room and Cable Vault shall be divided into a smaller

risk zones. These zones shall be separated by 120 minutes rating fire barrier walls.

3.10.00 For containment of fire and preventing it from spreading in cable galleries, unit wise fire barriers with self-closing fire doors will be provided. In addition, all cable entries / openings in the cable galleries, tunnels, floors will be sealed with non-inflammable / fire resistant sealing materials to prevent fire propagation for at least three (3) hour. Fire protection cable coating compound over cables at switchgear entry points, power station building entry points and trays shall be provided to prevent damage from fire for at least thirty (30) minutes. The number of fire doors as prescribed by the TAC/LPA shall be provided. Atleast two fire escape exit openings to the open areas shall be provided for the TG area as prescribed by the TAC/LPA.

3.11.00 Back Lit maintained type emergency "exit light" shall be provided in control room, control equipment rooms, switchgear and MCC rooms, battery charger rooms, escape stair case in power house and transfer points in coal conveyor area and other buildings in the plant. These shall be switched on upon detection of fire.

3.12.00 Addressable analog smoke detector shall also be provided in all false ceiling in power house i.e. Control room, Control equipment room, ESP control room.

3.13.00 “First aid fire protection system" shall be provided for Power house.

3.14.00 Gas sensing fire detectors working on air sampling shall be provided for all control rooms, and control equipment room.

3.15.00 Provision should be kept for automatic closing of fire dampers in ventilation ducts or tripping of related ventilation fans as required on detection of fire.

3.16.00 The main source of water to the fire pumps and jockey pumps shall be from steel made fire water storage tank which is to be sized by the EPC contractor based on TAC/LPA guideline. However, the minimum capacity of the steel tank shall be 5000 m^3 with two compartments . The Water for both hydrant and High/Medium Velocity Water Spray System shall be supplied by six (6) nos. automatic firewater pumps. Out of six (6) pumps two (2) nos. motor driven working hydrant pumps and one (1) no. diesel engine driven standby hydrant pumps for hydrant system and one (1) no. motor driven and one (1) no. diesel engine driven (both are working) spray pumps for HVW & MVW spray water system and one (1) no. diesel engine driven pump is common standby for spray system. Out of these six (6) nos. fire water pumps three nos. (3) will be motor driven and three (3) nos. will be diesel engine driven. The pumps will be started automatically in proper sequence when a large quantity of water flows out from pressurized water circuit. There shall be adequate arrangement of meeting up system leakages and at the same time the system pressure shall be maintained by providing a hydro pneumatic tank along with two (2) nos. motor driven jockey pumps, one (1) working and one (1) standby and two (2) nos., one (1) working & one (1) standby compressors. Booster Pumps shall be provided as per the TAC/LPA guidelines. However, the no. of pumps and their capacity, head etc. are to be finally decided by the Contractor during detail engineering stage.

3.17.00 If water pressure in the hydrant pipe network is not adequate to maintain minimum 3.5 kg/cm² (g) at the hydraulically furthest hose station at elevated floors of boiler houses and turbine building, then 2x100% motor driven booster pumps shall be provided for individual areas for supplying pressurized water to the hose stations. Booster pumps are installed online to the branch header to riser pipes. The booster pumps if required shall start through pressure switch when pressure on their discharge side falls below the set pressure.

3.18.00 Adequate separating distances will be maintained between different process blocks and hazardous equipment. To prevent fire from spreading through ventilation & air conditioning ducts, dampers with auto closing arrangements will be provided at appropriate locations. FRLS power and control cables will be used.

3.19.00 **Nitrogen Injection System**

Nitrogen Injection Fire Prevention and extinguishing system designed for oil filled transformer (for Generator Transformer) shall prevent tank explosion and the fire during internal faults resulting in the arc where tank explosion will normally take few seconds after arc generation and also to extinguish the external oil fires on transformer top cover due to tank explosion and/ or external failures like bushing fires, due to OLTC fires and fire from surrounding equipments.

Nitrogen Injection System shall be provided along with the emulsifiers for the transformers.

The system shall work on the principle of DRAIN and STIR and on activation, shall drain a pre determined quantity of oil from the tank top through outlet valve, to reduce the tank pressure and inject nitrogen gas at high pressure from the lower side of the tank through the inlet valves to create stirring action and reduce the temperature of top oil surface below flash point to extinguish the fire.

Conservator tank oil shall be isolated during the bushing bursting, tank explosion and oil fire, to prevent aggravation of oil fire.

Transformer isolation shall be an essential pre condition for activation of the system.

The system shall be designed to operate manually, in case of failure of power source.

The details including Design, description, control, scope, etc. of this system are attached with Annexure-IX of this specification.

3.20.00 Two (2) nos. Mobile Fire tenders shall be envisaged for this project. However as no fire station is envisaged, these two (2) nos. mobile fire tenders shall be placed in the new fire Station of the unit of this project. For details of Fire Tender, refer to Annexure-X of this Volume.

4.00.00 OPERATIONAL PHILOSOPHY

4.01.00 Hydrant System

4.01.01 Operation of hydrant system shall be semi-automatic. A pressurized hydrant main shall be maintained through the combination of hydro pneumatic tank, jockey pumps and compressors. When the header pressure of fire water pumps falls below a preset limit, diesel engine driven fire water pump placed in "auto mode" shall be automatically cut-in. If the header pressure is not built-up even after the running of diesel engine driven pump and falls further down, this low pressure shall actuate another pressure switch which in turn shall cut in automatically the standby Diesel Engine driven hydrant pump. In each case above, if any of the above pumps is not started even after the signal from pressure switch is through, "pump fails to start" alarm shall be annunciated in the local control panel.

4.01.02 Hydro-pneumatic tank shall be filled up with water up to 2/3rd portion of its height. Air space shall be kept above the water- filled portion. The hydro-pneumatic tank will be equipped with necessary level switches and pressure switches. Minor leakage in the pressurized fire water system shall be replenished from hydro-pneumatic tank. When the level of hydro pneumatic tank is low, jockey pump shall be started automatically to replenish the level of water in the tank. Jockey pump shall be cut-out automatically when the level of water in the hydro pneumatic tank reaches its higher limit. Pressure switches provided in the hydro pneumatic tank shall be interlocked with the cut-in/cut-out operation of compressor which is used to maintain a constant pressure in the hydro pneumatic tank and there by to the whole fire fighting system.

4.02.00 Spray Water System

4.02.01 Operation of Spray Water System shall be automatic.

4.02.02 Header pressure of spray water system shall be maintained at a constant value with the help of hydro pneumatic tank as stated earlier in case of hydrant system.

4.02.03 When the pressure of spray water system falls down to a preset value, it will actuate a pressure switch which in turn shall send starting signal to the motor/ diesel engine driven HVW/ MVW spray water pump for automatic starting. If the pressure falls further below, common standby Diesel Engine driven pump shall be started automatically from the signal of it's pressure switch. Further, if necessary to arrest the falling pressure pumps for hydrant system shall also be started automatically and deliver water to the spray water system.

In each case above, "pumps fail to start" alarm shall be annunciated in LCP if any pump does not start even the start-up of signal from it's pressure switch is through.

4.02.04 Any Fire water pump, if started automatically, shall not be stopped without manual intervention.

4.02.05 In case of detection of fire in HT transformer, "deluge valve" in spray water line shall be opened automatically and spray water system shall come into operation fully automatically. Operation shall be annunciated.

4.02.06 In all other areas of spray water system, detection of fire shall produce annunciation in the respective local fire panel and the spray water system shall be brought into operation by opening automatically the deluge valves of the particular area.

4.03.00 **Inert Gas Flooding System**

Nitrogen Injection Fire Prevention and extinguishing system designed for oil filled transformer (for Generator Transformer) shall prevent tank explosion and the fire during internal faults resulting in the arc where tank explosion will normally take few seconds after arc generation and also to extinguish the external oil fires on transformer top cover due to tank explosion and/ or external failures like bushing fires, due to OLTC fires and fire from surrounding equipments.

4.04.00 Fire Alarm Panel

Bidder shall provide necessary local control panels for the fire protection system, which shall contain the following components and perform the following functions as minimum.

4.04.01 Fire water pumping and pressurizing system

Hot redundant PLC based system shall be provided for control and monitoring of hydrant system and spray water system. The system shall be provided with Graphic User Interface (GUI) with LCD screen based display unit , control switches and other operational keys and hardwired annunciation system. Necessary hardwired interface along with cables shall be provided for remote Operation & monitoring in the Main Fire Alarm Panel & workstations to be located in CCR .

4.04.03 Fire alarm detection and protection system

Hot redundant Microprocessor based Fire detection alarm cum MIMIC panels shall be provided in the following locations

i) Master Fire detection alarm cum MIMIC panel along with PC based operator station, 24 inch TFT LCD monitor, A3/A4 color laser jet printer , in fire station.

ii) Main Fire detection alarm cum MIMIC panel along with PC based operator station , 24 inch TFT LCD monitor , A3/A4 color laser jet printer , in CCR

iii) Repeater Fire detection alarm cum MIMIC panels , one each , in local area rooms eg , DM plant , AHP , CHP , CW pump house etc.

4.04.04 Volume VI of this specification shall be referred for technical requirements of different items eg. operator station, printer , panel , field instruments , cable

etc.

5.00.00 SCOPE OF WORK

5.01.00 Mechanical

a) One (1) no. automatic electric motor driven horizontal centrifugal fire water pumps with accessories for hydrant service.

b) Two (2) no. automatic diesel engine driven horizontal centrifugal fire water pumps with accessories for hydrant service.

c) One (1) no. automatic electric motor driven horizontal centrifugal fire water pumps with accessories for high velocity spray service.

d) One (1) no. automatic diesel engine driven horizontal centrifugal fire water pumps with accessories for medium velocity spray service.

e) One (1) no. automatic diesel engine driven horizontal centrifugal fire water pumps with accessories for common standby service for both HVW and MVW spray service.

f) Two (2) nos. (1 working + 1 standby) automatic electric motor driven vertical centrifugal jockey pumps.

However, the no. of hydrant and spray pumps shall be finalized by the EPC bidder during detail engineering.

g) Two (2) nos. electric motor driven vertical centrifugal type booster pumps (1W+1S) with accessories, as required, for individual area.

h) One (1) no hydro pneumatic tank and one (1) fire water storage tank of 5000 m^3 capacity with two (2) compartments.

i) Two (2) nos. (1 working + 1 standby) air compressor.

The capacity and head of hydrant, spray and jockey pumps and the sizing of compressors and hydro-pneumatic tank shall be finalized by the EPC bidder during detail engineering.

j) One centralized inert gas flooding system for the areas specified, complete with cylinder rack, gas manifold, pressure reducing stations, detection system components and panel, nozzles, piping, fittings and valves.

k) Foam tank skids for foam concentrate storage, complete with foam concentrate feed pumps, piping, fittings, valves, tank sludge trap and sludge disposal arrangement, safety valves, pressure gauges, level transmitter, level indicator and other required accessories.

l) Foam proportional skids, complete with skid base frame, foam and water piping, deluge valve, adductor, foam nozzles, ROR heat

detector and alarm system, local alarm panel and other required accessories for the protected areas as specified elsewhere in the specification.

m) Required nos. of portable fire extinguisher.

n) Outdoor hydrant valves with hoses, solid jet/triple purpose/fog type branch pipes with nozzles and quick coupling as required for the entire outdoor hydrant system specified. The equipment shall be as per specification.

o) Indoor hydrants (landing valves) with hoses, triple purpose branch pipe with nozzles and quick coupling end & "hose boxes" as required for the entire indoor hydrant system specified as per TAC/LPA rules.

p) Out of total nozzles provided in indoor & outdoor hydrant system, at least 10% shall be "fog type" and balance shall be of ordinary type.

q) The number of hose houses and hoses shall be as per TAC/LPA stipulations.

r) 32 mm NB connections for first aid hose reels, first aid hose reels along with branch pipe fitted with nozzles and quick coupling ends and isolating valves, hose boxes as required for the entire first aid fire protection system specified.

s) Sets of hydraulically operated deluge valves with bypass valve, isolating valve & test valve for all HT transformers as specified.

t) Sets of solenoid operated deluge valves with bypass valve, isolating valve & test valve for entire spray system for coal conveyors, turbine lub oil tank, boiler burner front and cable vault/spreader rooms.

u) Two (2) nos. of basket type strainers to be located at the discharge of spray water pumps.

v) Sets of Chrome plated frangible bulb type detectors for areas identified elsewhere in the specification.

w) Sets of addressable analog optical type of smoke detection arranged in X-zoning fashion for areas identified in the specification.

x) Sets of addressable analog multi criteria smoke detectors arranged in X-zoning fashion for areas identified in the specification.

y) Sets of Analogue Addressable type heat detectors for the areas identified in specification.

z) Solar blind Infrared detectors with inbuilt air purging unit for each conveyor. Dual wavelength Infrared flame detectors for boiler burner fronts and turbine oil tanks.

aa) Lot of linear heat sensing cables (non-electrically operated Fibre Optic LHSC) for the areas mentioned in the specification.

bb) Gas sensing fire detectors working on air sampling for all control rooms and control equipment room.

cc) Required nos. of addressable manual call points for the areas mentioned in the specification.

dd) Lot of open sprayers for HVW & MVW spray system.

ee) For periodic testing of deluge valve, one frangible bulb detector with GI pipe & isolating valve connected to detector network shall be provided for each of HT transformers.

ff) One (1) no. of siren of 10 KM range (minimum diametric).

gg) Complete lot of pipelines including all fittings for

- Entire hydrant system.
- Entire spray water (both HVW & MVW) system including network of sprayers.
- Entire compressed air piping for pressurising hydro pneumatic tank.

hh) Lot of cut-off gate valves, globe type instrument root valves and discharge valves for pumps & also for compressors. NRV's as required for firewater & compressed air lines.

ii) RCC Pipe enclosures/hume pipes of appropriate class for buried pipelines for all road crossings, rail crossing & for all places where bulldozer may operate.

jj) Vents and drains as required. Vent and drain valves shall be lockable type and drain lines shall be terminated to nearest surface drain.

kk) Pressure break-down orifices as required for hydrant system, spray system and first-aid-fire protection system.

5.02.00 **Civil**

For civil works refer to Volume VII.

5.03.00 **Electrical**

All electrical equipment and accessories as required for this system shall be supplied. These equipment and accessories shall meet the technical requirements of individual equipment specification covered under “Electrical Equipment & Accessories - Volume V” of this Bid Document.

5.04.00 **Control and Instrumentation**

Scope of supply shall not be limited to the following:

5.04.01 All field mounted instruments viz. process transmitters, local indicators / gauges,process switches, sensors, converters, etc. along with accessories as per specification and approved P & ID. All process transmitters shall be smart type with HART protocol.

5.04.02 All type of analogue addressable Fire sensors / detectors and associated detector loop cable and addressable interface modules.

5.04.03 Floor mounted vertical Fire detection alarm cum MIMIC panel & repeater panels complete with panel, racks, redundant electronic modules, redundant power supply units, battery & battery charger, redundant CPU module, zone modules, redundant communication modules, display units, indicating lamps, relays, communication / networking & interconnection cables, prefabricated cables, network components etc. in fully wired condition with all accessories viz, terminal blocks, gland plates, base channel, anti-vibration mountings etc.

5.04.04 PC based Operator station

5.04.05 A3 / A4 Laser Jet type Printer .

5.04.06 Hot redundant PLC.

5.04.07 Industrial grade Laptop based engineering station loaded with all latest version licensed software required for programming, troubleshooting and analysis for Fire detection alarm cum MIMIC panel & Repeater panel. This laptop shall also have licensed Office documentation software and Antivirus software.

5.04.08 Licensed version of all software for the Fire detection alarm cum MIMIC panels , PLC systems, MMI & Peripherals etc.

5.04.09 Ergonomically designed Control desks complete with all accessories and operator's chair for all Operator stations.

5.04.10 24V DC (2X12V DC) Battery and Battery charging units for each Fire detection and alarm panel & repeater panel .

5.04.11 240V AC, 50Hz, +/- 1% Mini UPS system for Operator station of Fire detection alarm cum MIMIC panel & Repeater Panels.
.

5.04.12 Optical fiber cable, networking hardware comprising of LIU & Media converter to establish communication link in between the Fire detection alarm cum MIMIC panel & Repeater panel.

5.04.13 Complete process hook up materials such as. Impulse pipes & tubes of different grades, pneumatic tubing, stub, root valves, instrument isolation & blow down drain valves, valve manifolds, gauge valves, fittings, stands, brackets, supports, stanchions, frames, racks, foundation bolts, nuts and others erection hardware as applicable for installation of all field instruments /

racks.

5.04.14 All instrument racks, gauge board, Junction boxes and enclosure complete with all accessories. Canopy shall be provided for all outdoor applications.

5.04.15 All safety grounding cable

5.04.16 All instrumentation signals, control, power, detector loop cable, special, prefabricated cable, fiber optic cable , Linear heat sensing cable and grounding cable with all accessories such as cable glands, lugs, ferrules etc. as required for interconnecting Bidder's supplied Instruments, panels, annunciators, junction box or any other equipments
within Bidder's scope of supply.

5.04.17 All perforated trays, flexible & rigid conduits, cable tray supports and hangers, cable accessories including pull / cable boxes, inspection covers, lugs, ferrules,fittings etc for the above cables.

5.04.18 All special tools and tackle viz. Copper cable splicing & crimping tool, Optical fiber splicing & jointing tool kit, Hand held programmer / calibrator (HART) for configuration of smart Transmitter, Fire detector testing kits as required for erection, commissioning & maintenance.

5.04.19 Supply of all start-up / commissioning spares.

5.04.20 All consumables like lubricants, tapes, markers, printer papers etc. up to handing over of I&C system.

5.04.21 Any other hardware / software, not mentioned explicitly, but essential for successful completion of work shall be considered in the scope of the Bidder.

5.04.22 Scope of Works

All items supplied by Bidder shall be erected, tested and commissioned by Bidder The quality of erection work shall conform to industry standards and shall take into cognizance of dust & water ingress.

5.04.23 Volume VII of this specification shall be referred for technical requirements of different items eg. operator station, printer , panel , field instruments , cable etc.

6.00.00 DESIGN BASIS AND INPUT

6.01.00 Mechanical

6.01.01 Hydrant System

a) Provision of "double headed hydrants" as per the configuration of "risk area" shall be acceptable.

b) Spacing of hydrant (outdoor) shall be 45 M in general and for internal

hydrant/landing valves spacing shall be 30 M (max.)

c) Pressure at each hydrant point (both outdoor & indoor) shall be minimum 3.5 Kg/Sq.cm(g).

d) Based on total nos. of hydrants (outdoor), nos. of branch pipes, triple purpose nozzles & hoses shall be determined as per guideline of TAC/LPA.

e) Based on total nos. of indoor hydrants (landing valves), nos. of hoses branch pipe, triple purpose nozzles & hose boxes shall be determined as per guideline of TAC/LPA.

6.01.02 **Spray Water System (HVW & MVW System)**

a) Minimum pressure at HVW nozzles and MVW nozzles shall be 3.5 bar and 1.4 bar respectively. Maximum pressure at HVW nozzles and MVW nozzles shall be 5 bar and 3.5 bar respectively. However, for cable vaults, same shall be as per TAC/LPA regulations.

b) Water density for top & bottom conveyor belt shall be 10.2 lpm/ sq.m.(min.)

c) Water density for all surfaces of Transformer shall be 10.2 lpm/Sq.m only.

d) Water density for Cable Spreader Room/ Cable Vault shall be 12.2 lpm/sq.m. (min.) of cable tray area.

e) For turbine oil tank and purification area, burner front water density shall be 10.2 lpm/sq.m. (min.).

f) Chrome plated nozzles shall be arranged in the form of ring to all transformers and nos. of such rings/tiers shall be decided considering maximum gaps between two (2) consecutive tier of rings as 3.0 M. The distance of the deluge valves from the transformers shall be approx. 6 metres.

g) All nozzles shall be open sprayer type and chrome plated.

h) No. of nozzles for any particular risk shall be selected considering the characteristic of nozzles provided by the bidder and also the density of water needed to protect completely the risk as per sl. no. (b) to (e) above/NFPA.

i) Cable vaults/cable spreader rooms shall be suitably zoned. Total water requirement for each zone shall be limited to one-third the capacity of each spray water pump.

j) Conveyor belt shall be suitably zoned. Length of each zone shall be so selected such that water requirement of each zone shall be limited to one-third the capacity of each spray water pump and in case of fire, three (3) zones (one forward and one backward and the zone under

fire) shall be flooded.

6.01.03 **Inert gas flooding system**

a) Proprietary inert gas shall be used for inert gas flooding system.

b) The centralized inert gas flooding system shall be designed considering the single largest protected volume.

c) Required number of pressure reducing stations shall be provided in the gas manifold for gas pressure reduction from cylinder pressure to required gas flooding pressure.

d) The inert gas flooding system and its components shall be designed as per NFPA 2001 recommendations.

e) The cylinder rack shall be designed to accommodate sufficient number of inert gas cylinders so that the largest protected volume can be flooded.

6.01.04 **Detection System (Microprocessor Based)**

a) Coverage of Frangible bulb type detectors, Infra red type heat detectors and multi criteria smoke detectors shall be considered. One smoke detector for every 100 m^2 or one heat detector for every 50m^2 of the compartment area shall be considered.

b) Solar blind IRD with inbuilt air purging unit shall be 3 nos. minimum for each conveyor, 1 no. each at a distance of 1-2 M from tail end and head end and 1 no. at middle. However, same shall be verified with the covering range indicated by the manufacturer.

c) Linear heat sensing cable shall be provided along the whole length of the top belt and bottom belt of each conveyor and on bearing and pulley of driving and non driving ends.

6.01.05 **General**

a) Each zone of cable spreader room shall be provided with one (1) no. cut-off quick opening type Deluge valve.

b) Each zone of conveyor belt shall be provided with one (1) no. Solenoid operated deluge valve.

c) Water velocity in Fire water pipes shall be as per TAC/LPA recommendation.

d) Frictional drop shall be calculated based on Hazen-Williams equation considering "C" as 120. Hardy-cross Method shall be applied to find out total frictional drop during selection of pump head. 10% margin in frictional head shall be considered during pump head selection.

e) Actual pipe size & TDH of pumps shall be selected by Bidder based on "design basis & inputs" specified herein and as approved by the Owner/Consultant.

f) Cut-off gate valves shall be provided for each small and big loops on as required basis.

g) Pressure break-down orifice shall be provided as necessary to restrict pressure of all hydrant point upto 3.5 Kg/cm.sq.(g).

h) Water sprayer shall be placed in such a way so that the "spray cone" overlaps each other. This is applicable for all transformers, cable vaults, conveyor belts and other areas where MVW or HVW spray system has been asked for.

6.02.00 Fire Detection Panel and repeater panel ,Linear Heat sensing cable

6.02.01 Fire Detection, Alarm and Protection system proposed through the Fire detection and Repeater panels shall provide continuous surveillance against fire in the areas of plant. All Fire detection and repeater panels shall be colored MIMIC based.

6.02.02 The Main Objectives of the of these panels are as follows:

a) To detect fire in its early stages and activate or alert for implementation of Emergency action, thus protecting personnel and equipment.

b) To provide an appropriate level of monitoring in the event of fire and audiovisual annunciation at respective Fire detection alarm cum MIMIC panel Repeater panel and the PC based operator station.

c) Opening of the deluge valve in case of fire detection.

d) The sensing of fire is accomplished through various types of fire detectors / LHS cable.

e) To ensure high reliability and availability of the system with quick and exact identification of the fire location without false alarm.

f) To provide contact output in the loop / from fire detection and protection panel & repeater panel for fire protection & other systems viz. opening of deluge valves, tripping of Ventilation System Fans / Dampers / Air Handling Units / tripping of belt conveyor / activating foam system / inert gas flooding system on detection of fire in specific area for effective fire protection.

6.02.03 Fire detection and alarm & Repeater cum MIMIC panel shall be provided in accordance with all codes and standards to annunciate fire alarm signals from fire protection and detection systems provided for the facility, annunciate system / device fault and to provide supervisory functions as required.

6.02.04 In case of fire, the audio-visual fire alarm shall be generated at Fire detection

and alarm & Repeater panel and also initiate a signal to operate hooter(s) in the area where the fire signal is detected.

6.02.05 Indication (bright LED type) and Graphic Display (LCD type) shall be provided ineach Fire detection and alarm & Repeater panel . Information / data from these Fire detection alarm cum MIMIC panel s shall also be available in a dedicated computer based operator station in.. This computer shall be an UL/FM Listed PC used to display event information from the network in a text and graphical format. Graphic screens shall be created with a built-in drawing utility of the protected area and are linked to fire alarm devices. Should a device go into alarm, the appropriate graphic floor plan is displayed along with operator instructions. This shall provide a quick and easy way to inform operators of a fire's location in the buildings. The computer shall have features including event logging, event history tracking, fire panel programming and control.

6.02.06 Each Fire detection alarm cum MIMIC panel shall be capable of operating in stand-alone mode. All Fire detection alarm cum MIMIC panel, Repeater panels and PC based operator stations shall be connected by a dedicated fault tolerant Local Area Network (LAN) through redundant Fiber optic communication cable.

6.02.07 Fire detection alarm cum MIMIC panel shall have multiple loop processing capability. Each area / zone shall be
monitored by one independent loop and a loop shall not be shared between different zones. Each Fire detection alarm cum MIMIC panel shall have additional capacity of handling at least ten alarms per zone, requiring only field wiring, as a spare for future modification or expansion.

6.02.08 The Fire detection alarm cum MIMIC panel shall continuously monitor the status of the detectors and connecting lines. The panel shall evaluate the analogue information received from each addressable detector and compare with set value to check for alarm condition.

6.02.09 Fire detection alarm cum MIMIC panel comprises of loop interface boards with specified loop capacity. The individual elements (detectors / sensors / control / fault isolation modules / interface modules) are looped together and connected to the loop interface board on the Fire detection alarm cum MIMIC panel on a 2-wire circuit (class B wiring).

6.02.10 Minimum indications to be provided on the Fire detection alarm cum MIMIC panel shall be Fire , Fault , Isolate , Pre-alarm, Multiple alarms.

6.02.11 Minimum controls to be provided on the Fire detection alarm cum MIMIC panel shall be Push button -Acknowledge , Push button- Reset , Push button -Test ,Push button - switch -Isolate.

6.02.12 Minimum information to be provided on the panel shall be Detector identification number, Connecting line identification number, Zone / Area description, Detector in isolated condition

6.02.13 Display of the status of the detector, sequence of the events, alarm and trouble summary etc. shall be displayed on the display unit of Fire detection

alarm cum MIMIC panel and as well as on the operator station and printer.

6.02.14 Alarms and indications of Fire detection alarm cum MIMIC panel s are repeated in the repeater panel. Repeater panels shall be provided with a 24" LCD display unit indicating major events, alarm, trouble etc., which shall repeat the information related to sector / area,zone, floor Elevation, room no. and detector no. etc., which are being displayed in the related Fire detection alarm cum MIMIC panel. Repeater panels shall allow acknowledgement of all alarm
signals generated by fire alarm system.

6.02.15 The fire detection and alarm system shall be in normal operation even during mains 240V AC power failure. The stand by DC power supply from the battery in Fire detection alarm cum MIMIC panel shall be capable of maintaining the system in normal operation & in alarm condition for a period of not less than 48 hours after the failure of mains supply.

6.03.00 **Electrical**

6.03.01 The automatic fire detection and alarm system shall be designed with electronics having built-in redundancy to ensure availability at all times.

6.03.02 Bidder shall offer microprocessor based Intelligent/ analogue addressable type fire detection and alarm system. Fire alarm system working on microprocessor based system shall have dual redundant fibre optic data highway.

The fire detection and alarm system shall essentially consist of Fire detection alarm cum MIMIC panels with respective CRT Key Board Stations located in CCR, Fire detection alarm cum MIMIC panel, Master Fire Alarm Panel with CRT Key Board Station located in Fire Station, Satellite Fire Alarm panels located in various Plant areas, detectors, Manual Call stations, alarm devices, accessories, wiring and all connections to devices.

6.03.03 The Fire detection alarm cum MIMIC panels in CCR and the Satellite Fire Alarm Panels shall be used for fire detection, associated annunciation system, power supply distribution etc. of the fire protection system. Satellite Fire Alarm panels shall be strategically located in different areas of the Power Plant considering zone-wise detection.

The Fire detection alarm cum MIMIC panels in CCR and the Satellite Fire Alarm Panels shall be microprocessor based and their primary function shall be to raise an effective alarm by visual and audible means upon receipt of an alarm signal from any of its detection circuit(s) and to activate any device(s) that may be connected to the system(s).

Each detection circuit shall be continuously monitored for fire and fault. Alphanumeric indications shall be provided for fire and fault. Facility shall also be provided for simulation, for test purposes, of these conditions by operation of a control switch, which shall also have a facility to isolate and reset the alarm-receiving group.

6.03.04 The Fire detection alarm cum MIMIC panels located in CCR shall be used to

hook-up with each Satellite Fire Alarm Panel to indicate group zone-wise fire annunciation from Satellite Fire Alarm Panels. Fire detection alarm cum MIMIC panels shall also supervise, monitor and annunciate the abnormal condition of the circuitry of the fire detection system through local panels.

6.03.05 External circuit supervision shall not require additional wires other than the pair used for detection or alarm. These two wires shall provide both supervision and alarm signals.

6.03.06 Upon activation of any detection device installed in the circuit, the system shall automatically report the status and initiate the sequence of operations with the following functions as minimum :

a) Sound an alarm on audible devices.

b) Notify automatically central fire station.

c) Light an indicating lamp on device initiating the alarm.

d) Display "zone" and / or device no. on the panel with defined message.

e) Activate the output relays for shutdown of ventilation/air- conditioning system, coal conveyor etc. as per requirement.

f) Actuate in fire protection devices & deluge valves etc.

6.03.07 Alarm shall have priority over trouble. All trouble conditions shall be reported to include the zone / device no., location etc.

6.03.08 In the event of detection of fire, auxiliary systems like ventilation, air-conditioning may require shutdown. For this purpose potential free contacts from the output of the fire protection system shall be made available in the local / main fire panel and terminated in the terminal block

6.03.09 The Fire detection alarm cum MIMIC panels as well as Master Fire Alarm Panel shall have provision and facilities for connection to Intel i5 (or latest version at the time of supply) WIN NT (or latest at the time of supply) based Personal Computer with SVGA Monitor and dot matrix printer to be provided by the Bidder. Fire response program shall be furnished on screen and automatic action shall be initiated by keyboard / mouse operation.

6.04.00 **Civil**

6.04.01 Buried piping shall be laid generally at a depth of 1.0 M below grade. In case of road crossing, same shall be 1.5 M minimum.

6.04.02 Construction of Valve chamber for under ground pipes, Hose house and shed for deluge valves and compressor as per good engineering practice.

7.00.00 **DESIGN AND CONSTRUCTION**

7.01.00 **Fire Water and Jockey Pumps**

7.01.01 **Performance Requirement**

a) Performance requirement for the pumps shall be guided by the `Data Sheet' enclosed in this section and TAC/LPA recommendation.

b) Pumps shall be capable of furnishing not less than 150 % of rated capacity at a head of not less than 65 % of the rated head. The shut-off head shall not exceed 120 % of rated head in the case of horizontal pumps and 140 % in the case of vertical turbine type pumps.

c) Pump-Motor sets shall be capable of continuously delivering the rated output for the voltage variation of (±) 10% and frequency variation of (±) 5% occurring separately or combined voltage and frequency variation of (±) 10% (absolute sum).

7.01.02 **Constructional Features**

a) The design and Testing Standards of the Pumps shall conform to the standards as indicated in the TAC/LPA recommendation.

b) The pumps shall comply with the regulations of Tariff Advisory Committee (TAC)/LPA and National Fire Protection Association (NFPA), USA as applicable.

c) Drive Unit Power rating for the fire water pumps shall be selected such that it is equal to higher of the two conditions:

i) 110% of the duty point power requirement.

ii) Motor input power required at 150% of the duty point capacity of pump

7.02.00 **Diesel Engine**

7.02.01 Performance requirement of the diesel engine shall be guided by TAC/LPA recommendations.

7.02.02 The engine shall be capable of operating continuously on full load at the site conditions for a period of at least six (6) hours.

7.02.03 The engine shall be naturally aspirated, super charged or turbo-charged as recommended by the manufacturer. (Ref. Fire Protection Manual by TAC/LPA).

7.02.04 The continuous engine brake horse power rating (after accounting for all auxiliary power consumption) at the site conditions shall be at least 20% greater than the brake horse power required to drive the pump at it's duty point at rated R.P.M. and in no case less than the brake horse power required to drive the pump at 150% of rated discharge or at any condition of operation of pump. Deaerating Factors considered by the manufacturer to arrive at the shaft power of the diesel engine at site, shall not be less than the following for

normally aspirated engines only:

a) 3% for each 305 metre elevation above MSL (Ref. NFPA, Volume-2, 1978).

b) 1% for each 5.6° C rise in air temperature above 15.6° C (Ref. NFPA, Volume-2, 1978).

The base power rating of the diesel engine shall be referred to any accepted datum like BS/SAE Standard condition or equivalent. In any case, horsepower rating shall not be higher than the limit set by Tariff Advisory Committee.

7.02.05 Design and construction of the diesel engine shall be guided by the TAC/LPA recommendations.

7.02.06 **Starting**

a) The engine shall be capable of both automatic and manual start.

b) Automatic cranking shall be effected by a battery driven D.C. motor having high starting torque to overcome full engine compression. Starting power shall be supplied from two (2) sets of storage batteries. One (1) set of battery is for automatic starting of the engine and the other provided for manual starting. A selector switch shall be provided at the automatic starting control panel to select any of the two (2) sets of battery for manual/auto starting of the engine.

The automatic starting arrangement shall include, as a safeguard, a "Repeat Start" feature so that if the pinion of the starting motor does not engage the flywheel at the first attempt, it is automatically retracted and after a short pause again will advance towards the flywheel.

This repeat start cycle will continue until five (5) kicks after which there will be suitable annunciation. The battery capacity shall be adequate for ten (10) consecutive starts without recharging with a cold engine under full compression.

c) Arrangement for both trickle and booster charge of the batteries shall be provided. When the engine starts running, provision should be kept to ensure that the charger is automatically disconnected and the battery is charged by engine dynamo.

Each diesel engine shall be provided with two (2) battery charger units of air cooled design. Each charger unit shall be capable of charging one (1) set of battery at a time. Provision shall, however, be kept so that any of the charger units of a particular engine can be utilised for charging any one of the two (2) batteries of that engine.

7.02.07 **Governing System**

a) The engine shall be fitted with a speed control device that will control the speed under all conditions of load.

b) The governor shall offer following features:

i) Engine should be provided with an adjustable governor capable of regulating engine speed within 10% of it's rated speed under any condition of load up to the full load rating. The governor shall be set to maintain rated pump speed at maximum pump load. (Refer Fire Protection Manual by TAC/LPA).

ii) Engine shall be provided with an over speed shut-down device. It shall be arranged to shut-down the engine at a speed approximately 20% above rated speed and for manual reset, such that the automatic engine controller will continue to show an over speed signal until the device is manually reset to normal operating position. (Refer NFPA).

c) The governor shall be suitable for operation without external power supply.

7.02.08 **Fuel System**

a) The diesel engine will run on High Speed diesel oil, analysis of which has been indicated elsewhere in specification.

b) Each engine shall be provided with fuel oil tank having storage capacity sufficient to run the engine at full load for at least six (6) hours.

c) For each compression ignition engine driven pump set, there shall be individual fuel tank and fuel feed pipes.

d) A suitable 1 phase 240 Volt fuel pump (portable) to be provided to fill up diesel oil from Diesel Drum received from supplier of Diesel. This pump should also have facility to be operated by hand, in case electricity fails.

7.02.09 **Lubricating Oil System**

Automatic pressure lubrication shall be provided by a crankshaft driven oil pump, taking suction from a sump and deliver pressurized oil through cooler and fine mesh filters to a main supply header fitted in the bed plate casing. High pressure oil shall be supplied to main and big end bearings, cam-shaft bearings, cam-shaft chain and gear drives, governor, auxiliary drive gears etc. Valve gear shall be lubricated at reduced pressure through a reducing valve and the cams by an oil bath. The above lubricating oil sump shall be equipped with adequate heaters having thermostat control to maintain the lubricating oil at recommended temperature for maintaining oil at low viscosity.

7.02.10 **Cooling Water System**

The cooling water system shall conform to any one of the systems specified in Fire Protection Manual of the Regional committee of the Tariff Advisory Committee / LPA / NFPA. The Contractor shall clearly indicate in his offer the type of cooling system adopted. In case fire water is used as a cooling media by tapping of the water from the fire water pump discharge (before the pump discharge valve), the capacity of the fire pump shall be increased, so that the net capacity meets the specification requirement.

7.02.11 **Instrumentation & Control**

The diesel engine shall be provided with adequate instrumentation. These shall include but not limited to the following:

a) Temperature indicator (contact type) in cooling water inlet and outlet.

b) Temperature indicator in lubricating oil outlet from the oil cooler.

c) Pressure gauges (contact type) for lubricating oil system.

d) Differential pressure gauges (contact type) across strainers/ filters.

e) Speed indicator.

f) Running hour meter.

g) Dip stick type lubricating oil sump level indicator.

h) Gauge glass type Fuel Oil Tank level indicator.

i) Voltmeter & Ammeter in dynamo type battery charging circuit.

7.03.00 **Air Compressors**

7.03.01 Air Compressors shall be designed for intermittent operation with high efficiency to satisfy the requirement as specified in the data sheets.

7.03.02 Compressor shall be mounted on an air receiver of suitable size so that delivery air pressure is kept within (±) 5% of rated pressure without excessive start-stop operations in the working cycle.

7.03.04 **Instrumentation and Miscellaneous Accessories**

The package air compressor and drive shall be supplied complete with the following instrumentation and accessories as minimum.

a) Discharge air pressure gauge.

b) Pressure switch to control actuation of compressor drive motor.

c) Starter for drive motor.

d) Pressure relief valve.

e) Drain valve.

f) Delivery valve.

7.04.00 **Fire Water Storage Tanks and Hydro-pneumatic Tank**

7.04.01 Fire Water Storage tanks hall be of Steel made of 5000 m^3 capacity with two compartments.

7.04.02 Design of Hydro pneumatic tank shall conform to IS-2825/ASME Section-VIII, Div.1. Design pressure should be the maximum expected pressure to which the vessel may be subjected plus 5% extra margin. Maximum expected pressure for vessel placed in the discharge line of pumps shall be based on the shut off head of the pump plus static head at pump suction, if any.

7.04.03 Design temperature of vessel shall be 10°C higher than the maximum temperature that any part of the vessel is likely to attain in course of operation.

7.04.04 Corrosion allowance of 2 mm (minimum) on shell and dished ends shall be considered while designing the tank. Suitable mill-allowance shall also be considered for shell and dished ends. Thinning/scaling allowance of 2 mm (minimum) shall be considered for dished ends.

7.04.05 Plates shall be cold rolled through plate bending machine by several number of passes to true curvature and joined by welding.

7.04.06 Tank seams shall be so positioned that they do not pass through vessel connections. Inside seam weld shall be ground smooth, suitable for application of corrosion resistant coating.

7.04.07 All welding shall be as per IS-816 or equal. Bidder shall state clearly in his proposal the make and type of welding rods necessary for construction work.

7.04.08 The tank should preferably be fabricated complete and tested at Manufacturer's works to ensure better workmanship.

7.04.09 **Tank Connections**

a) Bidder shall furnish all pipe material required for vessel connections. All flanged connections should be supplied complete with matching counter flanges, nuts, bolts and gasket materials.

b) Bolts and nuts shall be of hexagonal head conforming to IS-1367 or equal.

c) Gaskets shall be full-face type.

d) Level gauge with isolating valve shall be provided.

e) All connection as required for pressure gauge, pressure switch, level switch etc.

f) Manholes/inspection hole shall be provided in the tank for providing easy access into the same.

g) Suitable ladders attached to the tank shall be provided for easy access to various instruments mounted there on.

7.05.00 **Piping, Fittings, Valves and Specialties**

7.05.01 All pipelines under Bidder's scope of work shall be sized considering flow velocities as per TAC/LPA.

7.05.02 Design condition of piping and material of construction, galvanization etc. for pipes and fittings, handling different fluid shall conform to piping data sheet enclosed.

7.05.03 Pipes shall be provided with vent connection and vent valves at all high points and drain connection & drain valves at all low points. Drain valves shall be lock-closed type.

7.05.04 All pipe bends shall be long radius forged elbow and having bend radius R=1.5D.

7.05.05 Hangers and supports shall be capable of carrying the sum of all concurrently acting loads. They shall be designed to provide the required supporting effects and allow pipe lines movements as necessary. All guides, anchors, braces, dampener, expansion joint and structural steel to be attached to the building/structure/ trenches etc. shall be provided. Type of hangers and components for all piping shall be selected by Contractor and approval of the same shall be obtained from the Purchaser.

7.05.06 All piping system shall be capable of withstanding the maximum pressure arising from any condition of operation and testing, including water hammer effects.

7.05.07 Gate, Globe and check valves shall be used respectively for isolation, regulation and non-return services in general for compressed air and water line upto a certain size as indicated in valve data sheet. Suitable size of drain valves shall be used in drain lines.

7.05.08 All valves shall be suitable for service conditions i.e. flow, temperature and pressure under which they are required to operate.

7.05.09 Gate valves shall be outside screw rising spindle type

7.05.10 Gate valves shall be provided with hand wheel, position indicator, pressure-equaliser for valves 350 mm NB and above and drainage arrangement. Locking facility shall also be required where necessary. Gate valve shall be provided with back seating bush to facilitate gland renewal during full open condition. Globe valve shall have adequate profile for controlling action, check valve shall be swing check type and shall have arrow inscription to show the direction of flow.

7.05.11 Whenever any valve is found to be so located that it cannot be approached manually from the nearest floor/gallery/platform, hand wheel with floor stand or chain operator shall be provided for the same.

7.05.12 For the operation of valves located in the valve pits, suitable arrangement shall be provided to operate the valves from the ground level (i.e. from the top of Valve Pit). For this purpose wrench-operated valve may be looked for.

7.05.13 **Safety Relief Valves**

Design and construction shall be as per Volume : II-D, Section-II.

7.05.14 **Deluge Valves**

Deluge valves shall be used for automatic HVW spray system and MVW spray system. In automatic HVW Spray System, deluge valve in spray water line shall be kept closed normally by water pressure. Same water line will form the water circuit of fire detector. When the detector quartzoid bulb collapses in the event of fire, the water pressure in the deluge valve will fall resulting in the opening of deluge valve. Fast acting butterfly valves shall be provided as a bypass valve to the deluge valve, so that the butterfly valve can be operated manually in the event of fire, if there is any malfunction of deluge valve. Isolation valves on upsteam and downstream side of deluge valve shall be provided.

But the deluge valves, which will be used in the MVW spray system shall be of solenoid-operated type, will remain normally closed but in the event of fire, the solenoid will be energised to open the valve.

Wherever deluge valves are located, they shall be located in protective room For further details of Specification of all valves mentioned above, Data Sheet shall be referred to.

7.05.15 **Strainers**

a) For basket strainer details Data Sheet shall be referred to.

b) Y-type Inline Strainer (If required) - Body shall be constructed of mild steel as per IS:2062 (tested quality). Strainer wires shall be of stainless steel AISI:316, 18 BWG, 30 mesh. Blowing arrangement shall be provided with removable plug at the outlet. Screen open area shall be at least 4 times pipe cross-sectional area at inlet.

7.05.16 **Hydrant Valve (Outdoor) & Stand Post Assembly**

The general design of hydrant valve shall conform to IS:5290 type A and shall be suitable for outdoor operation and for further details data sheet shall be referred to.

The general arrangement of outdoor stand post assembly, consisting of a column pipe and a hydrant valve with a quick coupling end shall be as approved by the Regional Committee of the Tariff Advisory Committee/NFPA.

7.05.17 **Indoor Hydrant Valves (Internal landing valves)**

The general arrangement of the indoor hydrant valves (also known as internal landing valves) shall be as approved by the Regional Committee of the Tariff Advisory Committee/NFPA.

The general design of hydrant valve shall conform to IS:5290 Type-A and shall be suitable for indoor operation. It shall be identical with hydrant valves (outdoor) as outlined above to facilitate interchangeability.

7.05.18 **Hydrant Valves for First Aid Fire Protection System**

The Water Supply connection for the first aid hose reels shall be taken/tapped from the closest hydrant riser.

The general design and construction of the hydrant valves for first aid fire protection system shall conform to IS: 5290 Type-A and shall be suitable for indoor operation.

7.05.19 Hoses, nozzles, branch pipes and hose boxes

a) The first aid hose shall be provided with cotton-reinforced hoses as per IS: 884 with corrugated external surfaces. Each fire hose shall be provided with quick coupling, branch pipes, nozzles, spanners, etc. The hoses for the internal and external hydrant system should be Rubber impregnated woven jacketed type conforming to IS:636 Type-II.

b) Branch pipes shall be constructed of Stainless steel (SS-304) and have rings at both the ends. One end of the branch pipe will receive the quick coupling while the nozzle will be fixed to the other end.

c) The nozzle sizes shall be of not less than 16mm (or 5/8 inch.) in diameter, nor more than 25 mm (or 1 inch.) in diameters for indoor and outdoor hydrants and 6.35 mm (or 1/4 inch) for first aid fire protection system.

d) 2 Nos. 15m long Hose pipe fitted with quick coupling ends, branch pipes, nozzles, spanner etc. shall be kept in a hose box, which shall be located near point of use. The furnished design must meet the approval of the Regional Committee of the Traffic Advisory Committee/NFPA. The general design and construction of instantaneous couplings, branch pipes and nozzles shall comply with IS:903 (latest revision).

e) All instantaneous couplings, shall be of identical design (both male and female designs shall be utilised) so that any one can be interchanged with another. One male/female combination shall get locked in by mere pushing of the two valves together but will provide leak tightness at a pressure of 21 Kg/sq.cm. Designs employing screwing or turning to have engagement shall not be accepted.

7.05.20 **First Aid Hose Reels (Small Bore Hose Reels)**

a) First aid hose reels shall be provided inside the power house building only to provide facilities of preliminary fire fighting by people other than fire personnel.

b) At each floor 32 mm (or 1 and 1/4 inch) diameter first aid hose connection shall be provided from the hydrant risers. The first aid hose reels shall comprise of one no. SS (AISI- 304) isolation valve, reinforced (cotton) rubber hose pipe and one no. SS (AISI-304) nozzle (with isolation arrangement) duly mounted on a swing type (90 deg. min) hose reel.

c) The number and distribution of hose reels shall be such that the whole or each floor is protected and that no part of the floor is more than 6m (or 20 ft.) distant from a hose nozzle when the hose is fully extended.

7.05.21 All instrument root valves shall be stainless steel Gr. 316 globe type.

7.06.00 **Detectors (Microprocessor Based)**

7.06.01 Detectors shall be intelligent analogue addressable type. Detectors shall be housed or mounted in suitable enclosures in such a way that their performance is in no way affected. Special maintenance procedures, if any, required for the satisfactory operation of the detectors shall be clearly described.

7.06.02 In case detectors having electrical contact signal output on sensing fire, it shall be noted that the contact shall be "NC" type so that under fire conditions, this contact will open to initiate fire alarm system.

7.06.03 Normally the detectors, which has sensed fire and operated to give fire alarm could be easily located by the numbering scheme both on the detectors and zone-panel, for fire alarm system.

7.06.04 The various fire detectors serving a particular area/zone of plant may be wired-up in group and one common signal for each area or zone is transmitted to the zone indicating panel. The number of detectors to be installed shall be governed by total area to be protected, type of building construction, air movement, ceiling construction and sensitivity required.

7.06.05 The detectors shall be located where the largest combustion gas concentration can be expected.

7.06.06 It shall be possible to replace any type of detector head by a different type detector without requiring change in cabling/panel wiring and condition of the zone originally covered by the detector, thereby making it possible for a smoke detector to be replaced by either heat or flame type or vice versa.

7.06.07 All detectors shall be provided with built-in response indicating Lamp/LED which shall give local visual indication, in dense smoke condition when it will operate. The failure of lamps shall not prevent the function of detector.

7.06.08 The exact location of detectors shall be coordinated with other services like air-conditioning grills, light fittings, cable trays etc. to provide aesthetically pleasing appearance. The return air paths of air conditioning shall be avoided for detector location.

7.06.09 In such areas where detectors themselves are not easily accessible, the remote response indicators outside the enclosed areas shall be provided to indicate the fire condition.

7.06.10 Make and type of detectors shall be subject to Purchaser's approval.

7.06.11 The indigenous detectors shall have the approval of ISI/ISO in addition to the approval of FM/UL/. Detectors and panels shall be preferably from the same manufacturer for compatibility.

7.06.12 The detectors shall not be effected by temperature, humidity, air flows.

7.06.13 **Multi Criteria Smoke Detectors**

a) The multi criteria smoke detectors shall be capable of sensing the fire in the incipient or smoldering stage itself, long before the fire matures to a visible flame. For achieving this requirement, the detector shall be capable of sensing visible combustion gases (in the form of smoke) or invisible combustion gases, which are the only clues for a long time in smoldering fires.

b) The detectors shall be sensitive to very low smoke densities of the order of 0.05 gm/cu.m.

c) The detectors shall be of Multisensor type with a combination of photoelectric and heat sensing elements. The multicriteria smoke detector provides photoelectric sensing and heat sensing combined in a single sensor/base assembly. The multisensor base provides two sequentially addressable points, automatically assigned with one address selection.

d) The sensitivity of multicriteria smoke detectors shall be selected depending upon the environmental condition.

e) For further specification of multicriteria smoke detector, data sheet shall be referred to.

7.06.14 Rate-of-Rise and Fixed Temperature Heat Detector (IC Type)

a) The detector shall be solid thermal detector.

b) It shall operate on electronic-principle to provide precise fire detection.

c) The detector shall be of integrated circuit design enclosed in a robust moulded base.

d) It shall be completely moisture proof and air tight with exposed metal part specially treated to allow the device to be used in particularly

corrosive atmospheres.

e) The detector should work on rate-of-rise and fixed temperature modes of operation.

f) It shall have no moving mechanical parts.

g) The detector shall be either surface mounted or with the body concealed above the ceiling and only the detecting element in view.

h) The rate-of-rise detector shall function when the rate of temperature increase exceeds a pre-determined value, around 7 to 8 Deg C per min. This detector shall be designed to compensate with the normal changes in ambient temperature, less than 6.7 Deg C per min., which are expected under non-fire conditions.

i) For further details, data sheet shall be referred to.

7.06.15 Detection System by Linear Heat Sensing Cable

a) Linear Heat sensing cable shall be non-electrically operated optical fibre type.

b) The detector system shall consist of an optical fibre sensor and the detection unit. The detector unit shall house the electronic circuitry that interfaces with the optical fiber sensor.

c) The optical fibre shall be connected to the detector unit in a single continuous loop to ensure redundancy and full coverage of the protected zones even if the cable is broken/cut/damage at one point.

d) The fire or excessive temperature condition shall be sensed by the fibre. The detector unit shall recognize the change in optical transmittance of the fiber and cable breaker Fire/Alarm condition shall be identified within 1 mtrs locational accuracy.

e) For details of linear heat sensing cable, data sheet shall be referred to.

7.06.16 **Frangible (Quartzoid) Bulb Type Detector**

a) In frangible bulb type detectors a small amount of gas along with heat sensitive liquid (colored) is entrapped and hermetically sealed. This detector shall generally be mounted on the pressurized water line which forms a ring around the equipment to be protected. When the surrounding temperature rises more than the rated temperature of the detector, the gas inside the detector shall expand and as a result the quartzoid bulb shall collapse releasing water and consequently pressure in the water line shall fall sharply. This fall in pressure will give signal/annunciation in the Panel.

b) The frangible bulb shall be capable of withstanding the hydraulic test pressure (19 Kg/Cm^2 g) in normal practice.

c) Type and make of frangible bulb shall be of Owner's choice /approval.

d) For further details data sheet shall be referred to

7.06.17 **Infra red Spark/Ember Detector**

a) The detector must respond satisfactorily even when the lens, through which the detection is sensed are covered with coal dust or oily dust substance.

b) The detectors shall be designed to work satisfactorily in the event of vibration in any axis.

c) To prevent false alarms, the detectors shall be provided with purge air facility to keep the lines clean.

d) Facility for remote response indication shall be envisaged in each detector.

7.06.18 **Infra Red Flame Detector**

The Dual wavelength Infrared Flame Detector shall be provided in Boiler Burner front and Turbine Oil tanks to provide an alarm in case of fire.

7.06.19 **Gas Sensing Fire Detector**

Gas sampling type fire detectors working on the principle of air sampling shall be provided for early detection of fire in the high value control rooms.

7.07.00 **Manual Call System of Fire Alarm (Intelligent Addressable Type)**

7.07.01 Each Manual Call point unit shall comprise of a push button of reputed make enclosed in a M.S Box. The push button shall have minimum 1 NO and 1NC contact. The push button shall not be shrouded and the same shall be projected out from the surface the MS box. This whole assembly of push button in MS box shall again be enclosed in an external MS enclosure with all sides covered except the front side. The front side shall be sealed with breakable glass cover using neoprene or equivalent gasket.

The glass cover shall be fixed in such a way that the actuating push button is kept depressed (with NC contact closed and NO contact Open) so long as the glass cover is intact. In case of fire, when glass cover is broken to give fire warning, the push button shall be released due to spring action hence giving remote fire alarm through NC contact which is now changed over. The status of the change over of contact may be conveyed digitally also.

7.07.02 The MS Box and the external MS enclosure shall be completely dust, weather and vermin proof. The housing of the electronic circuitry shall have minimum IP 65 protection

7.07.03 The complete unit shall be suitable for wall/column mounting with necessary mounting accessories.

7.07.04 Clear inscription reading (in English) "FIRE ALARM - IN CASE OF FIRE BREAK GLASS" shall be provided for each manual call point unit, either on the MS enclosure or on a separate metal plate mounted behind the glass cover. The metal plate for inscription shall not tarnish under the atmospheric conditions.

7.07.05 Each manual call point unit shall be provided with the following accessories:

i) An iron hammer of sufficient weight, which could be used to break the glass cover. The iron hammer shall be suspended on a hook fixed to the external MS enclosure by means of a non-corrodible iron chain of sufficient length and play to facilitate easy breaking of the glass cover.

ii) Two numbers diametrically opposite earthing studs located on the outside surface of the external MS enclosure.

iii) An identification number (on a number plate) which will be invariably same as the number given to the fire alarm, indicating point on the Zonal and Main Fire Alarm panel. The identification number shall match with the address of the intelligent addressable Manual call point for easy identifying the Call Point unit.

iv) A dust sealing gland or equivalent on the external MS enclosure for outgoing cable from the unit.

v) A compression type cable terminating brass gland of reputed make for out going cable from the internal MS enclosure.

vi) In addition to this a red lamp Response Indicator shall be provided which will light up on actuation of manual call point to locate the manual call point station, which is operated.

7.08.00 **Control and Instrumentation**

For features and requirements of the control and instrumentation items including field instrument, Panels and Panel mounted instruments, relays, annunciators, selector switches, PLCs and other hardware and peripherals under scope of supply for the Fire Detection and Protection system. Bidder shall also refer the relevant clauses of the Volume VI of this Specification.

Specifications and data sheets for Detectors are furnished at the end of present Specification volume.

7.09.00 **Battery and Battery Charger**

7.09.01 **Battery**

a) Battery to be located in Plant Service Water Pump House shall be suitable to meet starting requirements of Diesel Engine driven pumps. Besides these all controls, indications, annunciations etc. (including multiplication of process interlock relays and auxiliary relays) shall have power supply from 24 V (2 X 12 V) Battery and Battery Charger

unit.

b) All controls, interlocks, indications, annunciation system etc. for each of the Fire detection alarm cum MIMIC panels (located in Central Control room) and the Repeater Panel (located in Fire Station), shall have power supply from 24 V (2 X 12V) Battery and Battery Charging Units. The Battery of each of the above Panels shall be located in the bottom portion of the same Panel. The PC with Printer in the central control room shall be powered up by the respective UPS Power of the Plant Instrumentation and Control System.

c) Diesel Engine Driven Fire Water Pump

The Battery shall have the capacity to start the Diesel engine at least for eleven starts. Further Battery shall have capacity to meet auxiliaries & other loads of Local Control Panel (if any) for a minimum period of 10 hours. Minimum Ampere-hour capacity of the Battery shall be selected accordingly.

d) The Battery driven Power supply shall be available to main and repeater fire alarm panel shall be designed to provide supply for a minimum period of 10 hours. Minimum ampere hour capacity of the Battery shall be selected accordingly.

e) Bidder shall compute the ampere hour capacity at suitable discharge rate based on above duty and furnish the calculation along with the Bid which shall consider the duty cycle and 25% & 15% compensation for ageing & unforeseen future growth respectively of each battery unit. The maximum and minimum ambient shall be 42°C and 11.7°C respectively.

The minimum voltage at the end of the load cycle shall not be less than 1.8 volts per cell.

7.09.02 **Battery Charger**

For design and construction of Battery Charger refer Volume V.

7.09.03 **Layout of Battery & Battery Charger**

a) The battery and charger of the respective panels shall be an integral part of each of the main fire panel / local fire panel / repeater panel.

b) Bidder shall indicate his own layout of 24 volt Battery and Charger to suit the space available.

7.09.04 Fittings & Accessories

Battery

Each battery shall be furnished with necessary accessories required.

8.00.00 **INSPECTION AND TESTING**

8.01.00 **Pipes/Fittings**

8.01.01 Hydraulic test or Eddy Current test shall be carried out at manufacturer works on pipes as per IS: 1239 Part 1/ IS: 3589. Fittings (bends, elbow, etc.) shall be as per IS 1239 Part 2 or equivalent specification.

8.01.02 Butt welds joints on buried as well as on above ground pipes shall be subjected to radiographic inspection as per TAC/LPA's manual.

8.02.00 **Water and Air Line Valves**

8.02.01 All valves shall be tested as per relevant design code of valve.

8.02.02 Valve trim material shall be subjected to NDT if diameter is equal to or grater than 50 mm.

8.02.03 Air tests shall be conducted as per applicable codes to detect seat leakages.

8.02.04 As cast heat marks shall be provided on castings and must be co-related with test certificates.

8.03.00 **Hydrant Valves and Stand Post Assembly**

8.03.01 The stand post assembly along with the hydrant valve (valve being open and outlet closed) shall be pressure tested to detect any leakage.

8.03.02 Flow test shall be conducted on the hydrant valves. The flow through the valve shall not be less than 900 liters/min. Vender may submit type test report of similar size of valves duly certified by reputed TPIA (eg Lloyds, BV etc) or by ISI

8.03.03 Leak tightness test of the valve seat shall be conducted.

8.04.00 **Indoor Hydrant Valves (Internal landing valves)**

Each internal landing valve shall be tested for pressure, flow and leak tightness as in clause no. 8.03.00 above.

8.05.00 **Hydrant Valves for First Aid Fire Protection System**

Each hydrant valve for first aid fire protection system shall be tested for pressure, flow and leak tightness as in clause no. 8.03.00 above.

8.06.00 **Fire Water Monitors**

Tests shall be done on Fire Water Monitor as per Code and Data Sheet.

8.07.00 **Hoses, Nozzles, Branch Pipes and Hose Boxes**

8.07.01 Rubber lined impregnated woven jacketed hoses shall be tested as per IS-636, Type-II and first aid fire protection hose shall be tested as per IS-444.

In both cases, following tests shall be included.

a) Percolation test b) Pressure test c) Burst test

The branch pipe, coupling and nozzles shall be subject to a hydrostatic test pressure to detect any leakage.

8.08.00 **Strainers**

Pressure drop test shall be carried out for basket strainers as well as Y-type line strainers.

8.09.00 **Battery and Battery Charger**

All equipment and components thereof shall be subject to shop tests as per relevant IS/IEC standards. The tests shall also include dielectric tests on Battery Charger.

8.10.00 **Fire detection alarm cum MIMIC panels and Repeater panels**

8.10.01 All equipment shall be completely assembled, wired, adjusted and tested at the factory as per the relevant standards.

8.10.02 Routine Tests

The tests for the panels shall include but not necessarily limited to the following :

a) Operation under simulated service condition to ensure accuracy of wiring, correctness of control schemes/annunciation system and proper functioning of the equipment/devices and continuity test of printed circuit cards.

b) All wiring and current carrying part shall be given appropriate High Voltage Test.

c) Routine test shall be carried out on all equipment such as contactors, relays, switch, fuse, instrument transformers, meters etc.

d) Power frequency withstand test shall be performed on control/ secondary wiring.

8.10.03 Type Test

Type test on typical section of a panel consisting of Transformer Panel, Power pack module unit, Control and operation unit, Annunciation unit etc. shall be performed as per relevant IEC/Fire codes.

8.10.04 Auxiliary Equipment

All component parts and auxiliary equipment such as space heater, insulator etc. shall be routine tested as per relevant IS/IEC.

8.11.00 **Type Tests on Fire Proof Sealing System and Fire Stop System**

The type tests for fireproof sealing system for floor/wall opening/fire stop system for bottom of Electrical Switchgear MCCs/Panel are as under:

a) Fire rating test

b) Hose stream test

c) Accelerated ageing test

d) Fire rating test on the penetration seal system built of accelerated aged components followed by Hose Stream Test.

e) Temperature rise test for cable in the fire stop.

f) Water absorption test followed by fire rating test.

g) Flame resistance test for fire protection coating material.

h) Anti-rodent Test.

The detailed test procedures for each of these tests are to be submitted by the bidder and is subject to approval by Owner/ Consultant.

9.00.00 **DRAWING, DATA AND MANUALS TO BE SUBMITTED BY BIDDER**

9.01.00 **Drawings to be Submitted by the Bidder**

9.01.01 Flow diagram showing the complete fire protection scheme with associated controls for the following :

i) Hydrant System both Indoor and Outdoor.

ii) Automatic type High Velocity Water Spray System with quartzoid bulb detection system in pressurized water loop.

iii) Automatic type Medium Velocity water spray system with digital type heat sensing cable as detector.

iv) Multicriteria smoke detection system arranged in cross-zoning principle.

v) Heat Detection System (IC type).

vi) Diagram showing the lubricant system etc.

9.01.02 Schematic and wiring diagram for Battery Charger.

9.01.03 Layout arrangement of battery with catalogues.

9.01.04 Mounting arrangement of battery charger.

9.01.05 Typical general arrangement drawing showing constructional features, space required in front & back, Power/Control/Signal Cable entry points, etc. of local fire panels, main fire panel, repeater fire panels and local control panel.

9.01.06 Typical Control Schematic diagram for solenoid operated valves, drive motors, Fire-detector circuits.

9.01.07 Contact multiplication diagram for hook-up with Air-conditioning System, Ventilation System, Coal Handling System.

9.01.08 Typical Annunciation System Schematic Diagram along with control and instrumentation scheme of the Fire Protection System.

9.01.09 Layout arrangement of Battery Charger inside.

9.01.10 Typical drawings for Fireproof Sealing System indicating fixing details and dimensions.

9.01.11 Write up on control and operating philosophy of complete Fire Fighting System.

9.01.12 System configuration of Fire water pumping & pressurizing system , Fire alarm detection & protection system etc. along with interface technique of other systems.

9.01.13 Proposed GA drawing of different panels.

9.01.15 I/O list

9.01.16 Technical data sheets

9.01.17 Bill of Materials

9.01.18 P&I diagrams

9.01.19 Details of Spares

9.01.20 Details of Training

9.01.21 Filled up Bid Proposal Sheets

9.01.22 Deviation Sheet.

9.02.00 **Data and Curves**

9.02.01 Battery cell voltage characteristics and data for different discharge rates.

9.02.02 Schedule of projectors in MVW spray system and various types of detectors i.e. quartzoid bulb, smoke detector, heat detectors & fire sensing cable, indicating nos. selected for each type of equipment/area.

9.02.03 Technical Leaflets on fireproof sealing system and Fire Protection Coating System.

9.02.04 Type Test Certificate for all the tests specified elsewhere in the specification.

9.03.00 **Design Basis & Back-up Calculations to be submitted by Bidder after award of contract**

9.03.01 Final version of all drawings and data submitted along with bid.

9.03.02 Back-up calculation for no. of quartzoid bulb detectors provided for detection of fire in transformers.

9.03.03 Back-up calculation for no. of multi criteria smoke detectors (optical type arranged in X-zoning fashion), provided for cable spreader room/cable vault/switchgear room/ control room etc.

9.03.04 Back-up calculation of IC type heat detectors provided for Indoor/outdoor type LT Transformers (Rating less than 10MVA).

9.03.05 Back-up calculation of heat sensing cable provided for detection in coal conveyor.

9.03.06 Basis of selecting no. of high velocity spray nozzles in LT transformer. One typical calculation each type of transformer shall be furnished.

9.03.07 Basis of selecting no. of medium velocity sprayer nozzles in coal conveyor, cable spreader room etc. One typical calculation in each case shall be furnished.

9.03.08 Pipe sizing calculation including thickness calculation considering allowable velocity of fluid in pipe line as furnished in "Design basis and input".

9.03.09 All civil/structural design calculations as applicable within civil scope of work.

9.03.10 Calculation for sizing of Battery and Battery chargers for each category of service.

9.03.11 Detail dimensional drawings of various panels , cabinets , equipment , components / sub assemblies with internal views.

9.03.11 Complete layout diagrams with foundation details of all panels , cabinets etc.

9.03.12 Junction Box / Rack GA & schedule and Instrument / JB location drawing.

9.03.13 Complete interconnection and cable schedule

9.03.14 JB / Panel Wiring drawings

9.03.15 Power Distribution Drawing

9.03.16 Pneumatic / Process Hookup drawing.

9.03.17 Complete loop and Logic diagrams

9.03.18 Logs and Graphics

9.03.19 List of special tools and tackle

9.03.20 List of consumables

9.03.21 Erection drawings and documents

9.03.22 Calibration and shop test certificates

9.03.23 QAP

ANNEXURE-I

DATA SHEET FOR FIRE WATER PUMPS

			Elec. Motor Driven	Diesel Eng. Driven	Jockey Pumps	Booster Pumps, if required
1.00.00	Service	:	a) ←- Fire Hydrant System -→ b) ← Fire spray water system →		For Pressurization of fire water system	Fire Hydrant & Spray System
2.00.00	Duty	:	←---------- Intermittent ----------→			
3.00.00	Location	:	←---------- Indoor ----------→			
4.00.00	Number of Pumps Required	:	a) Hydrant Pump – 1 No. b) High Velocity Water Spray Pump – 1 No c) Medium Velocity Water Spray Pump – 1 No.	Hydrant Pump – 2 Nos. Out of two one (1) is standby for hydrant system. Common standby for HVW & MVW Spray Water System – 1 No	Two (motor driven)	Two nos. for individual area
5.00.00	Pump Performance Requirement					

			Elec. Motor Driven	Diesel Eng. Driven	Jockey Pumps	Booster Pumps, if required
a)	Performance standard	:	<---------- Hydraulic institute standard ---------->			
b)	Rated capacity (Cu.m/hr.)	:	410	410	By Bidder	By Bidder
c)	Total head, (MLC) not less than	:	Bidder shall decide to meet TAC/LPA requirements		Bidder shall decide to meet TAC/LPA requirements	Bidder shall decide to meet TAC/LPA requirements
d)	Rated speed (rpm) Max.	:	<---------- 1500 ----------→			
e)	Permissible tolerance in rated capacity (%)	:	←---------- As per IS : 5120 ----------→			
f)	Permissible tolerance in efficiency at rated capacity (%)	:	←---------- No negative tolerance ----------→			
g)	Range of operation	:	←---------- 25% to 130%----------→			
6.00.00	Design standard	:	←----------HIS/ IS 5120/Equivalent Standard----------→			
7.00.00	Impeller type	:	←----------Semi open----------→			
8.00.00	Type of gland lubrication and sealing	:	←----------By Bidder----------→			
9.00.00	Shaft sealing arrangement	:	←---------- Mechanical seal ----------→			

			Elec. Motor Driven	Diesel Eng. Driven	Jockey Pumps	Booster Pumps, if required
10.00.00	Axial thrust balancing device to be designed for pump shut-off operation	:	←---------- Yes ----------→			
13.00.00	Type of pump-motor connection	:	←----------Direct ----------→			
14.00.00	Type of coupling	:	←---------- Flexible Coupling ----------→			
15.00.00	Mode of pump starting	:	←-- Discharge valve fully open ---→			
16.00.00	Material of Construction					
	a) Casing	:	← 2.5% NiCI as per IS:210 Gr. FG 260 →			
	b) Casing liner	:	←---------- Do ----------→			
	c) Impeller	:	<--------ASTM - A 743 GR. CF 8 M-------→			
	d) Wearing rings	:	<------ SS-304 -------→			
	e) Pump shaft	:	←--------- AISI 410 (Hardened) ----------→			
	f) Gland	:	← 2.5% NiCI as per IS:210 Gr. FG 260 →			
	g) Base plate	:	←----- Carbon Steel as per IS-2062 -----→			
	h) Mechanical Seal	:	<----- As per Manufacturer's Standard-------→			
	i) Wetted Fastners	:	←---------- SS-316 ----------→			

			Elec. Motor Driven	Diesel Eng. Driven	Jockey Pumps	Booster Pumps, if required
	j) Companion Flange	:	←----- Carbon Steel as per IS-2062 -----→			
17.00.00	Supply of accessories & services					
	a) Base plate	:	←---------- Yes ----------→			
	b) Foundation bolts, nuts, sleeves etc.	:	←---------- Yes ----------→			
	c) Suction & Discharge companion flanges with bolts, nuts & gaskets	:	←---------- Yes ----------→			
	d) Priming connection with 3 way SS isolating valve	:	←---------- Yes ----------→			
	e) Suction & Discharge pressure indicator	:	←---------- Yes ----------→			
	f) Vent with 3 way SS isolating valve	:	←---------- Yes ----------→			
	g) Pump-motor coupling and guard	:	←---------- Yes ----------→			
	h) Drain connection with valve		←---------- Yes ----------→			
	i) Eye-bolts, lifting tackle etc.	:	←---------- Yes ----------→			

ANNEXURE-II

DATA SHEET
FOR
DIESEL ENGINE

1.00.00	**GENERAL INFORMATION**		
1.01.00	Service	:	Plant Service Water Pump House
1.02.00	Designation	:	Internal combustion Diesel Engine.
1.03.00	Type	:	Compression ignition, mechanical (air less) direct injection, multi cylinder and four stroke cycle and cold starting type.
1.04.00	No. of engine required	:	Three (3)
1.05.00	Duty	:	Intermittent
1.06.00	Location	:	Indoor
2.00.00	**ENGINE PARAMETERS**		
2.01.00	Nominal output of engine at site operating under ambient conditions	:	Bidder to indicate during detailed engineering.
2.02.00	Speed of the engine	:	Not more than 2300 rpm.

ANNEXURE-III

DATA SHEET
FOR
AIR COMPRESSOR

1.00.00	Service	:	For Pressurization of Hydro pneumatic Tank
2.00.00	Number required	:	Two (2) (1- working + 1- standby)
3.00.00	Type	:	Oil free, water cooled, Rotary Screw Compressor.
4.00.00	Duty	:	Intermittent from receiver pressure
5.00.00	Location	:	Indoor
6.00.00	Drive		Electric motor as per Volume V and V-Belt drive

ANNEXURE-IV

DATA SHEET
FOR
FIRE WATER STORAGE TANK & HYDRO-PNEUMATIC TANK

Description	:	Hydro-pneumatic Tank	Type	:	Vertical Cylindrical
Installation	:	Outdoor			
Fabricated	:	At shop	Water space capacity	:	To be indicated by Bidder
Construction	:	Welded	Working Pressure	:	Discharge pressure of Compressor
Steel	:	As per IS-2002 Gr. 2A	Design & Testing Code	:	IS-2825/ASME Section VIII Div. I
(*) Plate Thickness (Min.)	:	To be indicated by Bidder			
Shell (for all Houses)	:	Bidder to indicate			
Dished ends	:	Bidder to indicate			
Corrosion Allowance	:	2.0 mm (Min.)			
Joint Efficiency Factor	:	0.85			

Description	:	Fire Water Storae Tank	Type	:	Vertical Cylindrical
Installation	:	Outdoor	Nos.	:	1 (one) with 2 (two) compartments
Fabricated	:	At shop	Water space capacity	:	To be indicated by Bidder. However, minimum capacity of the tank shall be 5000 m^3.
Construction	:	Welded	Working Pressure	:	Atmospheric

Steel	:	As per IS-2002 Gr. 2A	Design & Testing Code	:	IS-2825/ASME Section VIII Div. I
(*) Plate Thickness (Min.)	:	To be indicated by Bidder			
Shell (for all Houses)	:	Bidder to indicate			
Dished ends	:	Bidder to indicate			
Corrosion Allowance	:	2.0 mm (Min.)			
Joint Efficiency Factor	:	0.85			

(*) Bidder to indicate plate thickness after giving back-up calculation as per ASME SEC.VIII DIV.-I, Boiler & PV Code/ IS 2825.

ANNEXURE-V

DATA SHEET
FOR
PIPING, FITTINGS, VALVES AND SPECIALTIES

A. PIPING AND FITTINGS

1.00.00	Type	Buried pipes	Overground pipes normally full of water	Overground pipes normally empty but periodically charge with water & foam system applications	Overground compressd air pipes
		(i)	(ii)	(iii)	(iv)
2.00.00	Material	M. S. ERW pipes as per IS-1239, Part – 1 heavy grade (for pipes of sizes 150 mm NB or below) and IS-3589 Gr.410 ERW (For sizes 200 mm NB and above) or equivalent and galvanized as per IS 4736 for pipes normally empty and periodically charged with water and foam system application.			
3.00.00	Piping Thickness	Pipes for sizes 200 NB & above shall conform to IS: 3589 Grade 410. The final thickness shall not be less than that specified as per IS: 3589 as indicated below.			

Nominal Pipe Size (mm)	Outside Diameter (mm)	Wall Thickness (mm)
200 NB	219.1	6.3
250 NB	273	6.3
300 NB	323.9	7.1
350 NB	355.6	8.0
400 NB	406.4	8.0
450 NB	457	8.0
500 NB	508	8.0
600 NB	610	8.0

Note : a) To prevent soil corrosion buried pipes shall be properly lagged with two coat and corrosion protective tapes of minimum thickness of 4 mm (in two layers) of coal tar type as per AWWA C 203 / IS :15337.

b) Over-ground pipes normally empty but periodically charged with water, foam system applications & compressed air shall be galvanized as per IS : 4736.These pipes shall be provided with one coat of primer and three coats of chlorinated rubber paint.

3.00.00	Size	As per final design and engineering by Bidder and approved by Owner. However Bidder shall consider velocity of fluid in the pipeline & other criteria as indicated elsewhere for selection of pipe size.			
4.00.00	Construction	←---------- ERW ----------→			
		(i)	(ii)	(iii)	(iv)
5.00.00	Joints	Butt-welded for size 65 mm NB & higher as per ANSI B 16.9 and socket welded for sizes up to 50 m NB as per ANSI B16.11		Screwed flange as required for dismantling purposes for sizes 65 mm NB & above as per ANSI B 16.5 and screwed socket for sizes 50 mm NB & below. Welding on GI Pipes/fittings would be permitted provided the same is carried out by means of special electrodes suitable for the above application and the same shall be approved by the employer. After welding, welded portions shall be applied with three coats of zinc silicate treatment/rich paint over one coat of suitable primer. Further the contractor shall provide proper zinc paint at the point of welding.	
6.00.00	Fittings				
	Ratings/Wall thickness	Minimum thickness to match with that of pipe for pipe size 65 mm NB and above. For pipe size above 150 mm NB, minimum thickness shall be 6 mm. For pipe size 50 mm NB & below rating shall be 3000 lbs or wall thickness matching with that of corresponding pipe.			
	Material	The material shall conform to ASTM A234 Gr. WPB or ASTM A 105 or equivalent.			

Note :

1) All fittings and flanges for galvanized pipes shall be galvanized.

2) Unless otherwise specified, all elbows/bends shall be long radius type.

3) The fittings shall be galvanized as per IS: 4736 for galvanized pipe application. In case of branching connections from GI mains for spray piping network socket may be welded for more than two pipe reductions instead of standard tees.

4) Fabricated fittings shall not be acceptable up to pipe size of 300 NB. For sizes 350 NB & above, fittings may be fabricated as per BS: 2633/BS: 534.

5) Working and test pressure of piping & fittings shall be as per IS or relevant international standards.

B. **VALVES**

I. Gate, Globe & Check Valve

1. Basic Design Code

a) Gate Valve : i) IS-14846 for sizes 65 mm NB to 300 mm NB

ii) IS-2906 for sizes 350mm NB and above

b) Globe Valve : BS EN-13789

c) Check Valve : BS-1868

2. Construction : Cast body and bonnet/cover.

3. Material of Construction for Gate and Globe Valve

a) Body and bonnet Material for Gate and Globe valve cover IS-210 Gr. FG 260.

b) Trim/disc. : IS-210 Gr. FG 260.

c) Stem : Stainless steel to AISI-410 13% Cr. St.

4. Material of Construction of Check Valve shall be as given below:

a) Body, Bonnet & Cover : ASTM-A-216 Gr. WCB

b) Trim/Disc : 13% Cr. Steel as per ASTM-A-182 Gr. F6 Heat treated and Hardened, min. Hardness-250 HB.

c) Back seat & Hinge Pin : 13% Cr. Steel as per ASTM-A-182 Gr. F6.

Note: Gate, globe and check valve of size 50 mm NB & below shall be of forged CS body as per API 602(Gate valve), BS 1868(Check valve) and BS 1873(Globe valve). These valves shall have socket welded ends. Valves will be provided with locking arrangements.

II. Deluge Valve

1.	Type		:	Differential pressure type with diaphragm & clapper assemblies.
2.	Code/Standard		:	As applicable.
3.	Material of construction			
	a)	Body	:	CI conforming to IS-210 Gr. FG-260
	b)	Valve internal	:	Brass/bronze

4. Water motor alarm gong shall be provided for hydraulically operated Deluge valve. For solenoid operated deluge valve, same is not required.

C. **HYDRANT VALVE (OUT DOOR)/LANDING VALVE (INTERNAL HYDRANT VALVE) / HYDRANT VALVE FOR FIRST AID FIRE PROTECTION SYSTEM**

1.	Type		:	Female oblique type with the outlets angled towards ground.
2.	Code/Standard		:	IS-5290 Type-A
3.	Material of Construction			
	a)	Body	:	SS-304
	b)	Stop valve	:	SS-304
	c)	Spindle	:	SS-304
	d)	Seat	:	SS-304

D. **WATER MONITORS**

1.	Type		:	Fixed type
2.	Code/Standard		:	IS: 8442
3.	Flow		:	2500-2700 litre/min at 7 Kg/Sq.cm
4.	Rotation of body			
	a)	Horizontal	:	360°
	b)	Vertical	:	+ 105°- 20°
5.	Throw of monitors			
	Horizontal		:	55 - 60 M
	Vertical		:	25 - 30 M

6. Material of construction

a)	Base flange	:	M.S. conforming to IS: 6392
b)	Reducer	:	M.S. conforming to IS: 1239 Part-II
c)	Water nozzle	:	SS304

E. **FIRE HOSE FOR INTERNAL AND OUTDOOR HYDRANTS**

1.	Type	:	Impregnated woven jacketed
2.	Code/Standard	:	IS-636 Type II
3.	Wt. (gm/M)	:	Not more than 250
4.	Coil diameter	:	Not more than 44 Cm. (for 30 M long)

F. **FIRE HOSE FOR FIRST AID FIRE PROTECTION SYSTEM**

1.	Manufacturer	:	As per approved make
2.	Type	:	Corrugated external surface, reinforced rubber hose pipe.
3.	Code/Standard	:	IS-884

G. **BRANCH PIPES AND NOZZLES**

1.	Manufacturer	:	As per approved make
2.	Type	:	Triple purpose, solid jet and Fog type
3.	Code/Specification	:	IS-2871 for branch pipe and IS- 952 for Fog Nozzles.

4. Material of construction

a)	Branch pipe	:	SS AISI-304 & Construction as per IS-2871
b)	Nozzle	:	SS-304
c)	Diffuser	:	SS-304 & Construction as per IS-2871
d)	Fog Nozzle	:	SS-304 & Construction as per IS-952.

H. **HOSE BOXES/CABINET (INDOOR)**

1.	Manufacturer	:	As per approved make.
2.	Material of construction	:	MS 16 SWG & 3 mm thick glass panel in

front door with lock & two keys.

3.	Size	:	To accommodate a pair of hoses one branch pipe, nozzles, spanner etc.
4.	Mounting	:	Wall/Column/Pedestal mounted

I. **HOSE BOXES/CABINET (FIRST-AID FIRE PROTECTION)**

1.	Manufacturer	:	As per approved make.
2.	Material of construction	:	MS 16 SWG & 3 mm thick glass panel in front door with lock & two keys.
3.	Size	:	To accommodate One (1) no. of hose with end fittings, one branch pipe, nozzles, spanner etc.
4.	Mounting	:	Wall/Column/ Pedestal mounted

J. **STRAINERS**

1.	Type		:	Simplex basket type
2.	Material of construction			
	a)	Body	:	MS fabricated IS:2062 tested quality
	b)	Internal	:	SS (AISI 316), 30 mesh suitably reinforced

K. **SPRAY NOZZLES FOR HVW AND MVW SPRAY SYSTEM**

1.	Manufacturer		:	As per approved make
2.	Type		:	Open head type / open nozzle solid cone
3.	Discharge angle		:	60° - 150°
4.	K - factor		:	Bidder to indicate
5.	Flow rate		:	Bidder to indicate
6.	Material of construction			
	a)	Body	:	SS-304
	b)	Insert	:	SS-304

ANNEXURE-VI

DATA SHEET FOR HOSE HOUSE

1.00.00	Service	:	To accommodate the hoses for outdoor hydrants with nozzles, branch pipes, spanner etc.
2.00.00	Location	:	Outdoor, to be strategically located in the entire plant area.
3.00.00	Number	:	As per TAC/LPA requirement

ANNEXURE-VII

DATA SHEET
FOR
DELUGE VALVE SHED

1.00.00	Service	:	To accommodate deluge valves of transformers rating more than 10 MVA, deluge Valves of coal conveyor and cable galleries etc. fire protection system.
2.00.00	Location	:	Outdoor. Bidder to select the suitable locations based on piping layout.
3.00.00	Number	:	Bidder to indicate

ANNEXURE-VIII

DATA SHEET FOR DETECTORS

A. MULTI CRITERIA SMOKE DETECTORS

1.00	Manufacturer	:	As per approved make
2.00	Type	:	Combination of Photo electric sensing and heat sensing, intelligent Analogue Addressable.
3.00	Code/Specification	:	NFPA-72E/BS-5839/IS
4.00	Sensitivity	:	Preset at factory/Adjustable at site (as per UL-268).
5.00	Temperature range	:	1.6 Deg.C to + 60 Deg.C
6.00	Humidity range	:	15% to 90% RH
7.00	Air velocity	:	0 to 300 ± 25 feet/minute
8.00	Plug in type detector to be provided	:	Yes
9.00	No. of terminals on detector on mounting base	:	Bidder to indicate
10.00	Area covered by single detector	:	Bidder to indicate
11.00	Operating voltage	:	24 volt D.C.
12.00	Inbuilt indicating lamp to indicate operation of the detector provided	:	Yes [Separate response indicators mounted on false ceiling to be provided for smoke detectors mounted above false ceiling]
13.00	Material of detector body	:	Metallic/Plastic
14.00	Detector is approved by UL/FOC/FM/TAC/LPA	:	Yes
15.00	Detector Base	:	Mounting box (if applicable) Double Compression gland.
16.00	Coverage area	:	Considering maximum spacing as per

IS: 2189

B. **HEAT DETECTORS**

1.00.00	Manufacturer	:	As per approved make
2.00.00	Type	:	Fixed temperature cum rate of rise type, intelligent Addressable Analog
3.00.00	Sensitivity	:	Preset at factory/Adjustable at site
4.00.00	Operating temperature range	:	54°C. to 60°C.
5.00.00	Humidity range	:	5% to 90% RH
6.00.00	Detector automatically resets after actuation	:	Yes
7.00.00	Area covered by single detector	:	Bidder to indicate
8.00.00	Operating voltage	:	24V DC
9.00.00	Type of contacts	:	Silver
10.00.00	Principle of operation	:	As per Specification
11.00.00	Detector approved by FOC/FM/UL/TAC/LPA	:	Yes
12.00.00	Detector Base	:	Mounting box (if applicable) Double Compression gland.
13.00.00	Coverage area	:	50 Sq.m per detector (Max.) / Maximum spacing as per IS-2189
14.00.00	Special cable	:	To be provided

C. **QUARTZOID BULB DETECTORS**

1.00.00	Manufacturer	:	As per approved make
2.00.00	Type	:	Frangible bulb type
3.00.00	Operating temperature	:	79°C
4.00.00	Material of Construction		
	a) Frame	:	Bronze (ASTM B 145) Class-5A

			Leaded gun metal, Chrome plated
	b) Bulb	:	Glass filled with heat sensitivity liquid (coloured)
	c) Deflector	:	Brass
	d) Cap	:	Copper
	e) Seal	:	Teflon/Rubber
5.00.00	Working pressure	:	3.5 Kg/Sq. cm (g) minimum
6.00.00	Detector approved by TAC/LPA/FOC/UL/FAS/NFPA	:	Yes

D. **LINEAR HEAT SENSING CABLE**

1.00.00	Manufacturer	:	As per approved make	
2.00.00	Type	:	Non-electrically operated Fibre Optical type linear heat sensing cable. It shall be totally immuned to EMI/RFI	
3.00.00	Operating voltage	:	24 Volt D.C.	
4.00.00	Ambient temperature	:	-20° C to 70 °C	
5.00.00	Operating temperature	:	Programmable type, with combination of fixed temperature and Rate of Rise in temperature.	
6.00.00	Cable Optical Parameter	:	62.5/125 µm graded index, Multimode Fiber	
7.00.00	Cable Jacket	:	Steel Type (for conveyor)	Thermoplastic (for cable tray)
	i) Nominal Cable Diameter	:	3.2mm	4 mm
	ii) Maximum weight	:	33 kg/km	23 kg/km
	iii) Minimum Bending Radius	:	75 mm	63 mm
8.00.00	Typical Performance	:		
	i) Sampling Resolution	:	1.0 meter	
	ii) Measurement Time	:	10 sec for 4 kms	
	iii) Measurement Range	:	-20° C to 150°C	

9.00.00	Detector/Control Unit Condition	:	LED for Power ON/Fault/Alarm It shall have freely programmable Relay Contact, minimum 16 nos.
10.00.00	Enclosure for Detector Unit	:	Weather tight and gasketed, IP-54 or better
11.00.00	All accessories such as fittings, fastenings, sleeves, straps, staples, clips (mounting) rings, test terminals, Junction Box etc. as may be required for interconnection of linear heat detector cables as well as interconnection to Control and Power Cable	:	Yes
12.00.00	Linear Heat Detector approved by FOC/FM/UL/ TAC/LPA/NFPA/VDS/LPCB	:	Yes
13.00.00	Interface	:	PC Interface via Ethernet/Mod-bus output etc.
14.00.00	Fire Detection	:	Unit should be able to detect abnormal/hot spot within 1 mtrs. Span. Further it shall be able to measure both side of the FO LHS cable in the event of wire break. So as to ensure continued fire protection over the entire length.

E. **INFRARED DETECTORS**

1.00.00	Manufacturer	:	As per approved make.
2.00.00	Type	:	Infrared Spark/Ember detectors, (Solar Blind) Intelligent analogue addressable with inbuilt air purging unit.
3.00.00	Operating Voltage	:	24V DC
4.00.00	Ambient Temperature	:	8°C to 45°C
5.00.00	Temperature Range	:	- 40°C to 60°C
6.00.00	Nominal Response Time	:	75 m.Sec. (Max.)
7.00.00	Sensitivity	:	1.0- 5.0 Microwatt shall be Field Adjustable
8.00.00	Dimensions	:	As per manufacturer's standard.

9.00.00	Enclosure	:	Dust and Water proof.
10.00.00	Mounting	:	To be mounted in protective sheet metal housing above conveyor.
11.00.00	Quiescent Current	:	10 mA/As per manufacturer standard.
12.00.00	Alarm Current	:	20 mA/As per manufacturer standard.
13.00.00	Acceptance Angle	:	120°/As per manufacturer standard
14.00.00	Spectral Response	:	0.8 to 2.0 Micron/As per manufacturer standard.
15.00.00	Half Power Cone Vision	:	90°/As per manufacturer standard.
16.00.00	All accessories such as air purging facilities for cleaning lens, protective housing mounting hinge & latch, J. Box Glands etc. as required.	:	Yes
17.00.00	Detector shall be solar blind	:	Yes

F. **INFRARED FLAME DETECTORS**

1.00.00	Manufacturer	:	As per approved make
2.00.00	Type	:	Dual wavelength Infrared flame detectors.
3.00.00	Application	:	Boiler Burner Fronts and Turbine Oil Tanks
4.00.00	Operating voltage	:	24V DC
5.00.00	Ambient temperature	:	8°C to 45°C
6.00.00	Temperature range	:	-40°C to 60°C
7.00.00	Response time	:	Flame - 20 Sec.
8.00.00	Sensitivity	:	One (1) foot diameter flame at 35 foot distance.
9.00.00	Field at view	:	90 Degrees
10.00.00	Quiescent current	:	7.5 mA/As per manufacturer's standard.
11.00.00	Alarm current	:	25 mA/As per manufacturer's standard
12.00.00	Stability	:	Bidder to indicate

13.00.00	Dimensions	:	As per manufacturer's standard
14.00.00	Mounting	:	Bidder to indicate in the offer itself.
15.00.00	Enclosure	:	Dust and weather proof
16.00.00	All accessories such as air purging facilities for cleaning lens, protective housing, bracket etc. as required	:	Yes

G. **GAS SENSING FIRE DETECTORS**

1.00.00	Manufacturer	:	As per approved make
2.00.00	Type	:	Gas sensing fire detectors working on air sampling
3.00.00	Application	:	All control rooms and control equipment room
4.00.00	Operating voltage	:	24V DC
5.00.00	Ambient temperature	:	8°C. to 45°C.
6.00.00	Relative Humidity	:	0.95%, non condensing
7.00.00	Sensitivity	:	0.006 to .06% obscuration per foot
8.00.00	Maximum Transport time	:	120 seconds
9.00.00	Detector Current	:	300 mA
10.00.00	Dimensions	:	Bidder to indicate
11.00.00	Mounting	:	Bidder to indicate in the offer itself
12.00.00	Enclosure	:	Dust and weather proof
13.00.00	All accessories as required	:	Yes

ANNEXURE-IX

Technical Specifications for Nitrogen Gas Injection System for Oil Filled Transformer

1. **Operation Controls**

The system is to be provided with automatic control for fire protection and fire extinction, beside automatic control remote electrical push button control on control box and local manual control in the fire-extinguishing cubicle is provided.

2. **System Activating Signals**

Transformer isolation through master trip relay or circuit breaker (HV & LV in series). Besides, two electrical signals to be provided in series, for activating the system as under:

i) For prevention :
Differential relay
Buchholz Relay paralleled with pressure relief valve or RPRR.

ii) For Extinction :
Fire Detector
Buchholz Relay paralleled with pressure relief valve or RPRR.

3. **System Equipment**

A. Fire extinguishing cubicle (FEC) to be placed on plinth at about minimum 5 meter away from the transformer, shall consist of:

i) Nitrogen cylinder with regulator and falling pressure electrical contact manometer.

ii) Oil drainpipe with mechanical quick drain valve.

iii) Electro mechanical control equipments for oil drain and predetermined regulated nitrogen release.

iv) Pressure monitoring switch for back up protection for nitrogen release.

B. Control box with activating, monitoring devices and line faults indicators (to be placed in the control room).

C. Pre-stressed non-return valve (PNRV) to be fitted in the conservator pipe line, between conservator and buchholz relay operating mechanically on transformer oil flow rate with electrical signal for monitoring.

D. Fire detectors to be fixed on transformer tank top cover for sensing fire.

E. Signal box to be fixed on transformer sidewall for terminating cable connections from fire detectors and PNRV.

4. **Other Requirements for System Installation**

A. Oil drain and nitrogen openings with gate valve on transformer tank, flanges with dummy piece in conservator pipe and fire detector brackets on transformer top cover.

B. Spare potential free contacts for system activating signals i.e. Differential relay, Buchholz relay, PRV/ RPRR, Transformer isolation.

C. Pipe connections between transformer to fire extinguishing cubicle and fire extinguishing cubicle to oil pit.

D. Cabling on transformer top cover. All fire detector to be connected in parallel and inter cabling between signal box to control box and control box to FEC.

E. Plinth for FEC, Oil pit with capacity as 10% of total oil quantity of transformer.

5. **Technical Details**

Fire Extinction Period
On Commencement of Nitrogen injection: Maximum 30 seconds
On system activation up to post cooling: Maximum 3 minutes

Fire Detectors heat sensing temperature: 141 ° C

Heat Sensing Area: 800 mm radius

Pre-stressed non-return valve setting for operation: Minimum 60 litre per minute.

6. **Power Source**

Control Box: 220V DC

Fire Extinguishing cubicle: 240V AC, 40W

7. **Cabling**

Fire survival cables 4 C x 1.5 mm ² for connection of fire detectors in parallel.

Fire survival cable 12 C x 1.5 mm ² for connection between transformer signal box/ marshalling box to control box and control box to FEC.

Fire survival cable 4 C x 1.5 mm ² for connection between control box to DC supply source and FEC to AC supply source, signal box/ marshalling box to pre-stressed non-return valve connection on transformer.

SCOPE OF SUPPLY & INSTALLATION ACTIVITIES FOR NITROGEN INJECTION FIRE PROTECTION SYSTEM FOR TRANSFORMER

A. System Equipments

1. Fire extinguishing cubicle with base frame and containing oil drain assembly, nitrogen cylinder, electro mechanical control unit for oil drain and nitrogen release, pressure monitoring switch for back up protection for release of nitrogen, detectors necessary for monitoring system, flanges with gate/ butterfly valves on top panel for connecting pipe connections from transformer, panel lighting etc.

2. Control box for monitoring system operation, automatic control and remote operation, with alarms, indication light switches, push buttons, audio signals, line fault detection suitable for tripping and signaling on 220V DC supply.

3. Pre-Stressed non-return valve (PNRV) working mechanically on transformer oil flow rate, with proximity switch for remote alarm indication and with visual position indicator.

4. Required no. of fire detectors rated for 141°C for heat sensing each fitted with two number cable glands.

5. Signal box for terminating cable connections from PNRV and fire detectors.

B. Other Material Requirements

1. FRLS cable 4 C x 1.5 mm² for fire detector connections.

2. Fire survival cables 12 C x 1.5 mm² for connections between transformer - control box.

3. Fire survival cables 4 C x 1.5 mm² for signals from relay panels to control box, panel lighting, PNRV connections on transformer etc.

4. Pipe connections between transformer and FEC, ERW class ‘C’ pipes with bends, flanges, other fittings and gate/ butterfly valves as required.

5. Pipe connections with fittings for connection between FEC – oil pit.

6. Mandatory Spares: 1 No. spare N_2 cylinder for each sub station 3 No. Heat Sensors for each system 1 set Hose pipes with fittings.

C. Installation of System

1. Civil Work

i) Plinth for fire extinguishing cubicle.

2. Pipe Connections between Transformer, FEC and Oil Pit

i) Oil drainpipe connections between outlet valve provided on the transformer tank and the flanges provided on FEC top panel.

ii) Drainpipe connections between oil drainpipe bottom (in FEC) to the oil pit.

iii) Nitrogen injection pipe connections between inlet openings on transformer tank and flange provided on FEC top panel.

3. **Cabling**

i) Connecting all fire detectors in parallel and terminating in signal box, using fire survival cables 4 C x 1.5 mm ² cable.

ii) Connecting PNRV to signal box, using Fire survival cables 4C x 1.5 mm ²

iii) Connections to FEC for 230V AC single-phase panel light supply, using fire survival cables 4C x 1.5 mm ²

iv) Connections from relay panel to control box using fire survival cables 4Cx1.5mm ²

v) Connections from DC source to control box directly or through DC-DC connector, using fire survival cables 4C x 1.5 mm ²

vi) Connections between signal box to control box and between control box to FEC using fire survival cables 12 C x 1.5 mm ²

D. Pre-Commissioning Tests

Pre-Commissioning tests shall be carried out jointly by system manufacturer and the purchaser or his representative prior to commissioning the system.

Note: This system shall be provided in addition to the Spray System for the transformers

ANNEXURE-X

FIRE TENDER

1.00.00 GENERAL INFORMATION

1.01.00 The Fire Tender to be supplied under this section shall be used for general protection against fire for this unit of the power plant.

1.02.00 The quantity of Fire Tender shall be two (2) numbers. The Fire tenders shall be located in the fire station of this unit of the plant.

2.00.00 BASIC FEATURES

Fire Tender shall have following basic features in line with NFPA - 414 and IS - 950, to combat the emergency situation for fire fighting in the plant. Fire Tender shall be equipped with following basic equipment.

2.01.00 Chasis

The fire tender will be mounted on a vehicle and shall have an all wheel drive for good mobility over cross country conditions.

The gross vehicle weight (GVW) rating of the chassis to be used shall exceed actual gross weight of fully loaded vehicle by at least 500 Kg.

2.02.00 Engine

The vehicle shall be diesel driven and able to develop sufficient power to achieve the required rate of acceleration of 64 Km/h in 55 second and a maximum speed of 72 Km/h, when fully laden. The accleration time shall be achieved on ambient temperature varying from 0 to 50°C and at elevation upto 600 m without engine preheating.

The engine shall be equipped with a governor which shall be set at not more than maximum permissible rev/min recommended for the engine at no load.

Each engine shall be equipped with a complete and separate starting system of 24 V type. An alternator and rectifier capable of delivering a minimum of 30 A at 24 V shall be provided.

2.03.00 Power Take Off

When the pump is powered by the vehicle engine, it should be driven through a suitable mechanical power take off (PTO). The PTO should be so designed that it transmits the full requirements of power for driving the pump. The power transmission should be uninterrupted even though the transmission gear may be shifted or the clutch released or the transmission is placed in any of its speed ranges. When a power take off pump drive is used, there shall be sufficient engine power both to operate the pump at the required rate

of discharge estimated at 134 KW (180 hp) and to propel the vehicle while creeping.

2.04.00 Vehicle Drive

The drive shall provide that transmission of power from the engine fly-wheel to the wheels of vehicle with such multiplication of torque that the vehicle is capable of traveling at specified acceleration and speed.

The suspension system shall be designed to allow the vehicle loaded or unloaded, to travel at high speeds over load surfaces or over rough unimproved terrain.

Fuel tank shall be of not less than 200 litre capacity. It shall be of rugged construction securely located and easy floor maintenance.

The vehicle shall be equipped with sufficient capacity compressor; with reservoir to ensure supply of dry air for brakes and pneumatic controls.

2.05.00 Water Tank

A water tank of 4500 litres (min.) capacity shall be mounted on the chasis in a manner keeping in view the proper load distribution on the axles. It shall be fabricated out of mild steel sheet of thickness not les than 5 mm at base and notless than 3 mm for the remaining portion, it shall be treated with corrosion resisting compound. Epoxy treatment should be given to inside of the tank. four lifting eyes shall be provided on the shell of the tank to enable the tank to be lifted off the vehicle for repairs/replacement as necessary.

The tank shall be fitted with manhole cum filling orifice of 450 mm dia. on top of the tank fitted with removable strainer.

2.06.00 Hose Reel

One first aid hose reel shall be provided and mounted so as to be accessible for use from left side of the appliance.

2.07.00 Pump

The pump shall preferably be made of any suitable alloy, compatible with aqueous film forming foam and protein foam compound, with stainless steel shaft suitable for use with brackish water. The pump shall be capable of delivering not less than 1800 l/min of water at a pressure not less than 8.5Kg/f (cm2), when operated from a suction lift of 1.5ml. the pump shall be of single stage/double stage and closed impeller type where the impeller is hydraulically balanced to reduce any thrust.

2.08.00 Primer

The primer shall be capable of a suction lift of 7 m in not more than 30 secs. using 100 mm suction hose.

2.09.00 Foam Equipment

A foam compound tank of 500 litter (minimum) capacity shall be mounted on the chassis, in addition to the water tank and as a separate distinct unit which can be removed separately for replacement.

The foam tank shall have its top dished with funneling arrangement provided to enable easy filling from 20 litre drum. The manhole for the tank shall be used for foam filling which shall have a stainless steel strainer. Means shall be provided for automatic vending of foam compound tank when the foam is being produced or the tank is being filled.

Automatic proportioning arrangements shall be provided where the present induction ratio of foam compound/water solution and flow of water are automatically varied merely by opening and closing monitor/handling. A foam monitor shall be mounted on the roof of the cab in such a manner that it can be manually operated by crew.

All parts of appliances shall be of good workmanship and shall have streamlined finish.

The appliance shall be painted “Fire Red” on the outside with the Fire Service insignia painted in gold and black.

2.10.00 Following accessories also to be provided :

a) One electrically operated siren 24 volts, to be mounted externally.

b) Fog Lamps Two. These shall be low mounted in front of the appliance.

c) Reversing light, one - It shall be suitably situated to assist reversing.

d) Wind screen Wiper Electrically operated of approved design.

e) VHF Radio Telephone set Bracket. A self contained VHF transmitting/ receiving set for communication.

f) All tools required for normal maintenance shall be supplied.

g) Users Hand Book and part identification manual.

h) Aluminium ladder shall be provided in the fire tender.

3.00.00 SCHEDULE OF EQUIPMENT TO BE CARRIED WITH THE FIRE TENDER

SL. NO.	ITEM	QUANTITY
1.	Armoured suction hose 100 mm dia complete with round thread coupling 2.5 m long (see IS : 3549 - 1983 and IS : 902 - 1974)	4 length
2.	Suction strainer for above (see IS : 907 - 1984)	1 No.
3.	Basket strainer for item 2 (see IS : 3582 - 1984)	1 No.
4.	Suction wrenches (see IS : 4643 - 1984)	1 pair
5.	Hose. 63 mm and 30 mm long with instantaneous couplings (see Type II of IS : 636 - 1979 and IS : 903 - 1984)	4 length
6.	Hose bandages (see IS : 5612 (Part-2) - 1977)	12 No.
7.	Hose clamps (see IS : 5612 (Part-1) - 1977)	6 No.
8.	Dual propose jet and diffuser nozzle with instantaneous connection (see IS : 28713582 - 1983)	2 No.
9.	Branch pipe (see IS : 903 - 1984)	2 No.
10.	Nozzles of sizes (see IS : 903 - 1984)	
	a) 12 mm	1 No.
	b) 19 mm	1 No.
11.	Nozzle spanner (see IS : 903 - 1984)	2 No.
12.	Dividing breechings (see IS : 5131 - 1986)	1 No.
13.	Dual head stand pipes (see IS : 5714 - 1981)	1 No.
14.	Hydrant valve key and bar (see IS : 910 - 1980)	1 No.
15.	9 kg. capacity suitable for fighting metal fires in charged condition with applicator (see IS : 11833 - 1986)	2 No.
16.	Self contained portable emergency lights working on rechargeable batteries	2 No.
17.	Insulated plier with rubber gloves pair tested to 20000 Volts (see IS : 3650 - 1981)	2 No.
18.	Copper bolt (see IS : 5200 - 1969)	1 No.

SL. NO.	ITEM	QUANTITY
19.	Hacksaw 300 mm adjustable with 5 spare blades each (see IS : 5169 - 1969)	2 No.
20.	Sledge hammer 5 kg. (see IS : 841 - 1983)	1 No.
21.	Hooks (see IS : 927 - 1981)	1 No.
22.	Crow bar (see IS : 704 - 1984)	1 No.
23.	Axe, drift and rescue (see IS : 273 - 1983)	1 No.
24.	Axe. Felling (see IS : 703 - 1966)	1 No.
25.	Fireman's axe with belt firemen and pauches firemen (see IS : 926 - 1970)	5 No.
26.	Quick release knife (see IS : 5486 - 1985)	5 No.
27.	Longline, hemp/ manila 50 mm circumference, 30 m long (see IS : 1084 - 1983)	Length
28.	Shortline, hemp/ manila 50 mm circumference, 15 m long (see IS : 1084 - 1983)	Length
29.	Lifting and pulling machine, 3 tonnes (see IS : 5604 - 1984)	1 No.
30.	Hook grab	1 No.
31.	First Aid Box	1 No.
32.	Blanker smothering	1 No.
33.	VHF radio telephone set	2 No.
34.	Motorized barrel transfer pump	1 Set
35.	Hydraulic rescue tools	1 Set
36.	Compressed air positive pressure type breathing apparatus, 30 minutes working duration (see IS : 10245 (Part-2) - 1982)	1 No.
37.	Fire proximity suits complete with head wear, hand wear and foot wear	2 No.

ANNEXURE – 06&07

(Customer Specification for General Electrical Equipment and Technical Specification for AC-DC Motors)

For 6.6 kV motor this specification shall be referred.

VOLUME : V-A

TECHNICAL SPECIFICATIONS
FOR
ELECTRICAL EQUIPMENT AND ACCESSORIES

CONTENTS

VOLUME V-A : TECHNICAL SPECIFICATIONS FOR ELECTRICAL EQUIPMENT & ACCESSORIES

SECTIONS		**DESCRIPTION**
SECTION-I	:	GENERAL ELECTRICAL SPECIFICATION
SECTION-II	:	A.C. & D.C. MOTORS
SECTION-III	:	ELECTRIC MOTOR ACTUATORS
SECTION-IV	:	GENERATOR BUS DUCT
SECTION-V	:	HT SWITCHGEARS
SECTION-VI	:	3.3 kV & 11 kV SEGREGATED PHASE BUS DUCT
SECTION-VII	:	415V PMCC/MCC, 415V ACDB AND 220V DCDB
SECTION-VIII	:	LOCAL CONTROL BOARDS/PANELS, LOCAL ISOLATING SWITCH UNITS AND LOCAL PUSH BUTTON STATIONS
SECTION-IX	:	GENERATOR TRANSFORMER
SECTION-X	:	UNIT TRANSFORMER
SECTION-XI	:	STANDBY TRANSFORMER
SECTION-XII	:	VARIABLE FREQUENCY DRIVES
SECTION-XIII	:	NON-SEGREGATED PHASE BUS DUCT
SECTION-XIV	:	GENERATOR CIRCUIT BREAKER
SECTION-XV	:	400KV SWITCHYARD

VOLUME : V-A

SECTION-I

GENERAL ELECTRICAL SPECIFICATION

CONTENT

CLAUSE NO.	DESCRIPTION
1.00.00	**GENERAL REQUIREMENT**
1.01.00	General
1.02.00	Codes & Standards
1.03.00	Environmental Conditions
1.04.00	Auxiliary Voltages
1.05.00	Equipment Protection
1.06.00	Type & Rating of Equipment
1.07.00	Control Philosophy
1.08.00	Scheme for Auxiliary Power Distribution
1.09.00	Islanding Scheme
1.10.00	Power Evacuation
1.11.00	Insulation Level
1.12.00	Neutral Grounding
1.13.00	Motor Voltage
1.14.00	Tropical Protection
1.15.00	Enclosure Protection
1.16.00	Painting for Electrical Equipment
1.17.00	Redundancy
1.18.00	Quality Assurance
1.19.00	Drawings/ Documents for Approval
2.00.00	**SCOPE OF SUPPLY & WORK**
2.01.00	General
2.02.00	Generator & Auxiliary System
2.03.00	Generator Busduct & MV Busduct
2.04.00	Generator Circuit Breaker
2.05.00	Transformers
2.06.00	Switchgears
2.07.00	DC System
2.08.00	Motors
2.09.00	Electrical Actuators
2.10.00	Variable Frequency Drives
2.11.00	Cabling
2.12.00	Cables
2.13.00	Grounding & Lightning Protection
2.14.00	Station Lighting
2.15.00	DG Set
2.16.00	EHV Switchyard
2.17.00	Energy Management System
2.18.00	Erection & Testing Equipment
2.19.00	Construction Power
2.20.00	Type Test

2.21.00 Mandatory Spares
2.22.00 Scope of Design Work

3.00.00 LAYOUT CRITERIA
3.01.00 Transformer Yard
3.02.00 Criteria of Oil Pit for Transformer
3.03.00 Layout Requirement for BOP Auxiliary Buildings
3.04.00 Equipment Layout
3.05.00 Interplant Cable Routing

4.00.00 SIZING CRITERIA
4.01.00 Generator
4.02.00 Generator Transformer
4.03.00 Unit & Standby Transformers
4.04.00 Auxiliary and LT Transformers
4.05.00 Bus ducts and Cables
4.06.00 DC System
4.07.00 DG Set
4.08.00 UPS System
4.09.00 Electrical Laboratory Equipment

5.00.00 PROVEN-MAKE CRITERIA
5.01.00 Isolated Phase Busduct
5.02.00 Power Transformers
5.03.00 Auxiliary Oil Filled /Dry type Transformers
5.04.00 11 kV & 3.3kV Switchgears
5.05.00 LT Switchgear
5.06.00 Numerical Relays & Networking
5.07.00 HT Motor
5.08.00 LT Control Cables
5.09.00 LT Power Cables
5.10.00 HT Cables
5.11.00 DG Sets
5.12.00 DC Batteries
5.13.00 Battery Charger
5.14.00 Generator Circuit Breaker
5.15.00 400kV Switchyard Equipment (AIS)
5.16.00 Substation Automation System & Protective Relays

ATTACHMENTS

ANNEXURE – A TECHNICAL PARAMETERS OF ELECTRICAL SYSTEM

VOLUME : V-A
SECTION-I
GENERAL ELECTRICAL SPECIFICATION

1.00.00 GENERAL REQUIREMENT

1.01.00 General

1.01.01 Contractor shall provide fully compatible electrical system, equipments, accessories and services for the entire station/plant in his scope as well as those specifically required by the Owner.

1.01.02 All the equipment, material and systems shall, in general, conform to the latest edition of relevant National and International Codes & Standards, in particular the Indian Statutory Regulations.

1.01.03 Drawings and annexure appended to this specification shall form part of this specification and supplement the requirements specified herein. This specification shall be read and construed in conjunction with the drawings and annexure to determine the scope of work and terminal points.

1.01.04 It is not the intent to specify completely herein all details of the system or equipment. Nevertheless, the system/equipment shall be complete and operative in all aspects and shall conform to highest standard of engineering, design and workmanship.

1.01.05 Any system, material or accessory which may not have been specifically mentioned but which is necessary or usual for satisfactory and trouble-free operation and maintenance of the equipment shall be furnished without any commercial implication to the Owner.

1.01.06 In case of a conflict between this Section (GENERAL ELECTRICAL SPECIFICATION) and the other Sections of Volume V-A & Volume V-B, the stipulation under this Section shall prevail, unless the Owner advises otherwise on a specific issue at the Bidding stage.

1.01.07 Proposal Data Sheets

The Proposal Data Sheets annexed to this specification shall be filled in without any ambiguity by typing in appropriate place on each page. These pages must be properly signed by authorized representative of the Bidder as verification of the data and submitted along with the bid to form part of the Bidder's formal proposal.

1.01.08 Guaranteed Performance

The performance figures quoted in Technical Particular Sheets shall be guaranteed within the tolerance permitted by relevant standards. In case of failure of the equipment to meet the guarantee, the equipment may be liable for rejection at any stage.

1.01.09 Deviation

Should the Bidder wish to deviate from this specification in any way, he shall draw specific attention to such deviation. All such deviations shall be clearly mentioned on the Deviation sheet enclosed, with reference to the respective clause of the specification. Unless such deviations are recorded in the Deviation sheets and submitted with the offer, it shall be taken for granted that the offer is made in conformity with this specification in all respects.

1.01.10 Drawing Approval

Before starting manufacture of any equipment, the contractor shall have to take approval of relevant drawings and data from Engineer in writing. Any manufacture done prior to the approval of drawings/data shall be rectified in accordance with the approved drawings/data by the Contractor at his own cost and the equipment shall be supplied within the stipulated period.

1.01.11 Site Condition

For the purpose of equipment design, reference ambient temperature shall be taken as 50°C. Other site conditions shall be as indicated in the Lead Specification.

1.01.12 The Contractor shall furnish calculations of maximum loading and fault levels under the most onerous conditions for the various equipment/systems as defined elsewhere in the specification to prove adequacy of their parameters. In case any equipment or system is found to be inadequate, it shall be changed/ modified without any additional financial liability to the Owner.

1.01.13 Transformer voltage ratios, taps, impedances and tolerances thereon, shall be so optimized so that the auxiliary system voltages under various grid and loading conditions are always within permissible limits and equipment are not subjected to unacceptable voltages during operation and starting of large motors such as MDBFP etc. The vector groups of the transformers shall be so selected that all the buses of particular voltage level have same vector throughout the plant.

1.01.14 Responsibility of coordination with electrical agencies /TAC/Pollution control board/Electrical Inspectorate and obtaining all necessary clearances shall be of the contractor.

1.01.15 Special Tools & Tackles

A set of special tools & tackle which are necessary or convenient for erection, commissioning, maintenance and overhauling of the equipment shall be supplied.

The tools shall be shipped in separate containers, clearly marked with the name of the equipment for which they are intended.

1.01.16 Spares

(a) The Bidder shall submit a list of recommended spare parts for three (3) years satisfactory and trouble-free operation, indicating the itemized price of each item of the spares. The final quantity shall be decided during placement of order.

(b) The Bidder shall quote and supply mandatory spare parts as per list attached in Vol. IIA, Sec.8. The final quantity shall be decided during placement of order.

(c) Each list shall be complete with specification, make, identification number, unit rate, quantity etc.

1.02.00 **Codes & Standards**

1.02.01 Equipment

Requirement of conformance with Codes and Standards is described in individual Sections.

1. 02.02 Installation

All electrical installation work shall comply with the provisions of the Indian Electricity Act, the Indian Electricity Rules as amended up to date, relevant IS Codes of Practice and recommendations of the Tariff Advisory Committee (TAC). In addition, other rules or regulations applicable to the work shall be followed. In case of any discrepancy, the more restrictive rules shall be binding.

1. 02.03 Nothing in this enquiry specification shall be construed to relieve the Contractor of his responsibility to abide by the Standards or Codes.

1.03.00 **Environmental Conditions**

1.03.01 The equipment will be installed in hot humid and tropical atmosphere highly polluted with coal dust and fly ash.

1.03.02 Sensitive relay and other electrical and electronic devices shall be located in controlled environment such as control room, electronic equipment room etc. as applicable.

1.03.03 For equipment installed outdoor and exposed to direct sun rays, the effect of solar heat shall be considered in determining the design ambient temperature.

1.04.00 **Auxiliary Voltages**

1.04.01 Auxiliary AC voltage supply arrangement shall have 11 kV, 3.3 kV and 415V systems. It shall be designed to limit voltage variations as given below under worst operating condition:

a) HT & LT AC System - ± 10%
b) 220V DC - -15% to +10%

1.04.02 Following auxiliary voltages will be envisaged for LT auxiliary power, control and instrumentation.

a) 240 V ± 10%, 1 Ph, 50 Hz +3% to -5%

b) 220 V DC +10% to (-) 15%, two wire, ungrounded

c) 240 V, 1 Ph, 50 Hz, UPS System

d) 24 V / 48 V DC, as required

1.04.03 Nominal voltage of main DC system shall be 220V. DC batteries shall be designed for continuous float operation with trickle charging, hence all the associated components like batteries, battery chargers, DC motors, relays, contactors, timers etc shall be suitable for continuous operation at the maximum continuous battery float voltage including suitable temperature correction factors.

In addition, the bidder may propose 48V or 24V systems as per requirements of control and instrumentation of his equipment and design.

1.05.00 **Equipment Protection**

1.05.01 The Contractor shall design the plant with the primary objective to mitigate the damage of the plant and equipment during fault or system disturbances.

1.05.02 Automatic trip functions will be initiated for isolation of fault, which could cause immediate and severe damage.

1.05.03 Every effort shall be made to avoid unnecessary trip. There will be annunciation to alert the operator to take corrective action in time.

1.05.04 At least two protective devices, preferably operating in parallel on different principles, will be utilized in protecting major equipment, where possible.

1.05.05 Major protections envisaged for various equipment are listed under relevant sections of this specification.

1.06.00 **Type & Rating of Equipment**

1.06.01 Number of types and sizes of standard products like motors, switchgear and control gear components etc. shall be kept to a minimum so that the requirement of spares is reduced.

1.06.02 Equipment shall be rated for the load and duty cycle of the intended service Circuit breakers and fuses shall be rated to withstand and interrupt the maximum fault current at the point of application in the circuit.

1.07.00 **Control Philosophy for plant Electrical System**

1.07.01 In line with the present-day practice centralised control of the electrical system/equipment has been envisaged for the plant. Control of electrical system of main plant and EHV breakers of generator bay shall be provided from DDCMIS with soft HMI. The details of the same are specified in relevant sections of Control and Instrumentation.

1.07.02 Generator will be controlled from Central Control Room in the Power House. However, bus selection for generator shall be done from Switchyard Control Room by operation of associated disconnecting switches.

1.07.03 400kV side of Standby Transformer feeder, when fed from 400kV switchyard, shall be controlled from Switchyard Control Room. OLTC control for such Standby Transformer shall also be done from Switchyard Control Panel.

1.07.04 Control & metering of Generator, GT, UT, ST etc. will be from Central Operating Console as well as from ECP. The protection of above shall be effected through redundant (2x100%) numerical protection relays. Separate set of CTs & PTs shall be used for implementation of such redundancy. Protection of GT, ST, UT shall be achieved through discrete numerical relay protection. Two (2) groups of different make numerical protection relays shall be adopted for Generator protection relays.

1.07.05 The control, indication, metering and monitoring of the electrical auxiliary power distribution system comprising of 11 kV & 3.3 kV circuit breakers (except those for motor feeders), 11/3.6kV Auxiliary transformers, LT transformers, 415 V switchgear breakers for incomers and bus couplers, DG system, etc. shall be achieved from operator's consoles through DDCMIS/PLC and ECP (as applicable). For details relevant section of C & I shall be referred.

1.07.06 All equipment/components, viz., transducers, etc. required to interface with plant DDCMIS/PLC system shall be provided in switchgear/control panels. The minimum protection required for different equipment and system are indicated in other Sections.

1.07.07 STOP pushbutton shall be provided in the local control panel for motors and this STOP annunciation signal shall be provided to the DDCMIS by hardware connection.

1.07.08 Control panels for service systems like Ash, C.W. pumps, ash dyke etc. shall be located in the respective control room. In addition, some local panels shall be provided near respective system/equipment such as boiler feed pump, hydrogen seal oil system, electrostatic precipitator, PMCC, ash dyke PMCC etc.

1.07.09 In case of internal faults in the generator transformer both turbine and generator will automatically trip. For faults external to the generator and transformer, the generator transformer breaker will open and the turbine, generator shall operate on house load.

1.07.10 Suitable unit interlock and protection scheme shall be developed to ensure safety of equipment and stable operation of the unit within permissible limits. Apart from this, the Generator Transformer, the Unit Transformer and the Standby Transformer have to be provided with necessary safety interlock.

1.07.11 In case of tripping of the unit, Fast bus change over scheme is proposed to change supply of the Boiler and the Turbine Auxiliaries from Unit to Standby system automatically and thereby avoiding trip out of the Boiler and providing uninterrupted supply to vital Turbine auxiliaries. Under this `Fast bus change over' scheme the Boiler shall be operating with 60% HP-LP Bypass even if there is trip out of Turbine & Generator.

1.07.12 Suitable operational logic shall be developed to operate and control the unit from Central Control Room along with its sub-group and sub-loop control. House load operation of this Unit has been contemplated.

1.08.00 **Scheme For Auxiliary Power Distribution**

1.08.01 Owner has chosen ‘Generator Circuit Breaker Scheme’ for the project as indicated in the Electrical Single Line Diagram enclosed with the specification documents.

1.08.02 Auxiliary Power Distribution scheme shown in the attached Electrical Single Line Diagram is for the Bidder’s guidance. The Bidder shall develop his own scheme maintaining the reliability and redundancy criteria. It shall be subject to the Owner’s acceptance.

1.08.03 In order to ensure safe shut down of the plant under emergency condition and to provide backup in case of total power failure, one (1) Diesel Generating set shall be provided.

1.08.04 Overall system shall be such that failure of any unit auxiliary like transformer, DC battery, Battery charger and DG set shall not reduce the plant's generating capability or affect the safe shut down requirements of the unit.

1.08.05 Wherever plant auxiliary supply is extended outside the plant boundary, suitable isolation through transformer shall be done.

1.09.00 **Islanding Scheme**

The unit shall be designed to operate in islanding mode of operation by tripping all the lines and the unit shall run with the available plant load under such condition. Necessary control philosophy shall be submitted by the Bidder.

1.10.00 **Power Evacuation**

The generated power will be stepped up to 400kV and evacuated through 400KV transmission lines. For new unit at KTPS (Kothagudem), power evacuation will be through 3 nos. new 400kV lines.

1.11.00 **Insulation Level**

The insulation level for the transformer windings and bushings shall be as under :

	Winding		Bushing	
Highest System Voltage	Rated Power Freq. withstand Voltage (kVrms)	Rated lightning Impulse withstand Voltage (kVp)	Rated Power freq. withstand voltage (kV rms)	Rated lighting Impulse withstand Voltage (kVp)
0.433 kV	3		3	
3.6 kV	10	40	10	40
7.2 kV	20	60	20	60
12 kV	28	75	28	75
17.5 kV	38	95	38	95
24kV	50	125	50	125
36kV	70	170	70	170
72.5 kV	140	325	140	325
145kV	275/*	650	275	650
245kV	395*	950/1050**	460	1050
420kV	630/*	1425/1570**	630	1425

* In case of non-uniformly insulated (refer IEC 60076-3, Table D.2)

**Chopped Wave BIL

1.12.00 **Neutral Grounding**

1.12.01 Neutral earthing equipment shall be designed duly taking into account the maximum permissible operating voltage of the generator, voltage rise on load throw off (subsequent to detection of earth fault) field suppression time, ferro resonance, etc. The generator shall be grounded through distribution transformer with secondary loading resistor, limiting the earth fault current to about 5-10 A and to restrict the over voltages caused due to capacitive currents. The neutral earthing equipment shall be rated to carry this current for at least 5 minutes considering the generator terminal voltage under maximum field forcing conditions.

1.12.02 11 kV/3.3kV system earthing shall be low resistance earthed type to limit earth fault current to 300A. The resistor shall be rated to carry this current at least for 10 seconds.

400kV system is solidly grounded.

Neutrals of Generator Transformers (on 400kV side) and all LT Transformers (415V) shall be solidly earthed through bolted links.

220V DC system shall be kept ungrounded.

Diesel generator shall also be kept ungrounded (earthing through PT).

1.13.00 **Motor Voltage**

The voltage level for motors shall be as follows:

a) Up to 0.2 kW - 240V AC / 415V AC

b) Above 0.2 kW and up to less than 175 kW - 3 ph, 415V AC

c) 175 kW and up to less than 1500 kW - 3 ph, 3.3KV AC

d) 1500 kW & above - 11 kV

415V or 3.3 kV may be adopted by the bidder for the drives in the range of 175-210 kW.

3.3 kV AC supply for CHP conveyor motors of rating above 160 kW is to be used.

The voltage rating of the drives indicated above is for basic guideline. Minor variations can be accepted on case to case basis based on techno-economic considerations of the various sub-systems.

Voltage rating for special purpose motors viz, VFD and screw compressors, shall be as per manufacturer's standard. All the motors ratings on Stacker/ Reclaimer shall be 415V AC supply only.

1.14.00 **Tropical Protection**

1.14.01 All electrical equipment, accessories and wiring shall have fungus protection involving special treatment of insulation and metal against fungus, insects and corrosion.

1.14.02 Fine mesh screen of corrosion resistant material shall be furnished on all ventilating openings to prevent entry of insects.

1.15.00 **Enclosure Protection**

1.15.01 Degree of protection of enclosures as per IS:13947 shall be as follows:

	Item	Degree of Protection
1	11kV & 3.3kV Switchgears	IP4X
2	415V MCC / DBs / Fuse Board	IP52 for indoor and IP65 for outdoor
3a	Motor	IP55
3b	Motor Actuator	IP65
4a	Control and Relay Panel in AC area	IP3X
4b	Control and Relay Panel in normal area	IP42
5a	Pushbutton Station/Kiosk/Panel - Indoor	IP55
5b	-Do - Outdoor	IP65
6	Indoor Junction boxes for cables / wires	IP55
7	Outdoor lighting fixtures	IPW55
8	Battery Charger Panel	IP42

1.15.02 In fire hazardous areas like gas/ liquid fuel storage/ handling areas, lighting fixtures, switchgears shall be of tested and certified flame proof design.

1.16.00 **Painting For Electrical Equipment**

Unless explicitly stated in relevant chapters of the specification, the painting of all electrical equipment shall be as follows:

Epoxy based with suitable additives. The thickness of finish coat shall be minimum 80 microns (minimum total DFT shall be 100 microns). However in case electrostatic process of painting is offered for any electrical equipment, minimum paint thickness of 80 microns shall be acceptable for finish coat. Paint shade shall be as per technical specification.

Paint shade of finish coat shall be as per Section-X of Volume – IIA: Lead Specification.

1.17.00 **Redundancy**

The Contractor shall develop the system configuration based on the concept that failure of any one auxiliary transformer or supply feeder will not affect full load operation or start up/shut down of the unit.

1.18.00 **Quality Assurance**

1.18.01 The Contractor shall follow his standard procedures for quality assurance and control. A copy of the said standard procedures shall be submitted to the Owner / Purchaser for his reference. However, Owner / Purchaser reserves the right to review the same and give his observations, if any, for compliance.

1.18.02 The procedures shall be in such a form as to clearly delineate the manufacturing sequence, inspection points, tests and test procedures, acceptable ranges / values, reference drawings etc.

1.18.03 The Owner / Purchaser shall inform the Contractor as to which of the inspection points and tests shall be witnessed. As a minimum, inspection and testing of the finished equipment shall be made prior to shipment, unless specifically waived by the Owner / Purchaser. The contractor shall give at least fifteen (15) days advance notice regarding readiness of the equipment.

1.18.04 Manufacturing and quality control procedures shall be available for audit to the Owner / Purchaser and/or its representative at the place of manufacture.

1.18.05 The Owner / Purchaser reserves the right to inspect the equipment at the point of manufacture and witness factory and other such tests as may be necessary to ensure conformance to the specification.

1.18.06 The Owner / Purchaser reserves the right to inspect the Contractor's facilities prior to award of contract.

1.18.07 The Owner / Purchaser reserves the right to witness any or all of the tests stipulated in the relevant standards and this specification.

1.18.08 The Owner / Purchaser may conduct surveillance of the Contractor's facilities for compliance to his standard procedures of Quality Assurance and Quality Control while work on the specified equipment is in progress.

1.19.00 **Drawings / documents for Approval**

1.19.01 The Contractor shall submit his Master Deliverable Schedule considering the priority of the listed documents with respect to the project execution schedule to enable the Owner's Consultants (DCPL) to plan manpower deployment. The documents in the Schedule should be marked in two categories viz. (a) 'For Approval' (A) and (b) 'For Reference' (R).

1.19.02 The Contractor shall assign the basic engineering documents in 'For Approval' category and obtain approval of those documents prior to submittal of corresponding detail engineering documents. For the Bidder's guidance - such documents shall include, but not limited to the following:

a) Master Deliverable List – Electrical with schedule of submission
b) Electrical key single line diagram for the entire plant indicating rating of equipment
c) Electrical system study (load flow, short circuit, motor starting) with software output.
d) Diagram of Generator, GT, UT & ST with Metering & Protection
e) Design Memorandum & Sizing Calculation for–
    i. Generator and Excitation System
    ii. GCB
    iii. Generator Busduct
    iv. GT, UT, ST and other auxiliary transformers
    v. MV busduct
    vi. DC System
    vii. DG Set
    vii. UPS
    viii. HT & LT Switchgears
    ix. HT & LT Cables
f) General Technical Particulars (GTP) of all electrical equipment
g) Logic diagram for Generator, GT, UT, ST.- Protection & Annunciation
h) Logic diagram for HT & LT Switchgears – Incomer, Tie, Bus-coupler, Feeders, Drives
i) Test protocol for all electrical equipment
j) Integrated unit protection scheme
k) Relay setting calculation for Generator, Transformer, 11kV/3.3kV/0.415kV system relay panels
l) CT and VT calculations for Generator circuit
m) Electrical single line diagram for auxiliary power distribution system
n) Design Memorandum - Grounding system
o) Design Memorandum – Lightning protection system
p) Design Memorandum – Cable raceway system
q) Design Memorandum – Station lighting system
r) Design Memorandum – Chimney & Cooling Tower electrical
s) Cable numbering scheme
t) Drive control & measurement philosophy and Plant Control Philosophy
u) Layout for -
    i. Transformer Yard
    ii. 400kV Switchyard
    iii. HT & LT Switchgear Rooms
    iv. Electrical Control Rooms
    v. Battery & Battery Charger Rooms
    vi. Inter-plant Cable Raceway

vii. Area Lighting
viii. Station Grounding Mat

u) All drawings/data relevant to the equipment like QAP, Guaranteed Technical Particulars, General Arrangement Drawing, Bill of Material, Foundation Plan, Single Line Diagram, Control Schematic, Wiring Diagram, Sizing calculations, etc. shall be furnished for approval of Owner/Owner's Consultant.

1.19.03 The Owner's Consultants may review a document assigned in 'For Reference' category as they deem necessary and furnish comments for compliance by the Contractor.

2.00.00 SCOPE OF SUPPLY & WORK

2.01.00 General

2.01.01 The scope of work related to electrical system is an intrinsic part of the total EPC Contract.

The Bidder's scope shall include design, engineering, manufacture, type testing, inspection & shop testing at supplier's works, packing, forwarding to site including customs clearance/ port clearance (if required), receipt and unloading, in-plant transportation, handling and storage (preservation & conservation of equipment) at site, erection including associated civil and structural works, testing and commissioning of the Electrical equipment/ system and works indicated in subsequent sections of Volumes – V-A, V-B & IIC (Generator) for one (1) unit and balance of plant (BOP) as indicated in this chapter. The scope includes all interface/ interconnections with the electrical systems under this contract as required for main plant, balance of plant, switchyard and other systems mentioned elsewhere. Electrical scope shall be as described briefly in the following clauses but not limited to it.

2.01.02 Scope of work shall also cover the design, manufacture, assembly, testing at manufacturer's works/laboratory, supply, delivery, properly packed for transport to site, storing at site of mandatory spares, 3 years O & M spares as detailed hereinafter in subsequent sections of Volumes- V-A, V-B & IIC as required for efficient and trouble free operation.

2.02.00 Generator and Auxiliary System

2.02.01 Generator complete in all respects including stator, rotor, bearings, couplings, terminal pads with palms and all its associated supervisory and instrumentation system.

2.02.02 Complete hydrogen cooling, carbon dioxide and nitrogen gas systems as applicable including the necessary piping and pipe supports, valves, measuring system along with the control panel and gas cylinders.

2.02.03 Complete seal oil system including the necessary tanks, pumps, motors, coolers, strainers, piping and pipe supports, valves, measuring system along with control panel.

2.02.04 Complete water cooling system where applicable including the necessary tanks, pumps, motors, heat exchangers, strainers, piping and pipe supports, valves, measuring system along with control panel.

2.02.05 Complete excitation system (brushless or static type) with main exciter, excitation transformer, thyristors, pilot exciter, rectifiers and filters, field flashing and field forcing

equipment, rotating diodes etc. as applicable along with the DAVR, de-excitation equipment, cables/bus duct and all necessary control, annunciation and monitoring equipment mounted on suitable panels.

2.03.00 **Generator Busduct and MV Busduct**

(a) Generator Busduct and Auxiliary equipment –Three phase busduct will run from generator terminals upto generator circuit breaker and from generator circuit breaker to generator transformer with intermediate tap-off connection to Unit/Standby Transformers and V.T. & S.P. cubicles. Delta run of busduct shall be achieved prior to connection with 1-phase GTs. Neutral side busduct run will terminate at the Neutral Grounding Transformer (NGT) cubicle. CTs shall be provided both phase & neutral sides of busduct.

(b) Medium Voltage Busduct

The standard equipment ratings have been specified in the relevant Sections.

2.04.00 **Generator Circuit Breaker**

A set of Generator Circuit Breaker alongwith one spare pole complete with all associated equipment, isolator on GT side and earth switches on both sides.

2.05.00 **Transformers**

S.No.	Equipment Name	Rating / Parameters/Quantity
1.	Power Transformers	
a)	Generator Transformers	330 MVA(minimum), 1-ph, as per SLD & system requirement
b)	Standby/Startup Transformers	as per SLD & system requirement
c)	Unit Transformers	as per SLD & system requirement
2.	Auxiliary Oil filled Transformers	as per SLD & system requirement
3.	Indoor Transformers (Cast Resin Dry type)	as per SLD & system requirement
4.	High voltage transformer-rectifier sets for ESP	as per system requirement
5.	NGR	as per system requirement
6.	Spare Oil for Transformer/ Reactor	10% of total oil for all Transformers

2.06.00 **Switchgear**

2.06.01 **11kV and 3.3kV Switchgear**

The scope shall include 11kV & 3.3kV Switchgear boards as required for power distribution to plant auxiliaries. Typical key single line diagram for auxiliary power supply is enclosed. The design and sizing criteria of the Switchboards shall be as described later in this Section.

All the Switchboards (each section) shall have two (2) nos. transformer feeder and two (2) nos. motor feeder of highest rating as spares.

SPBD tie connection among the 11kV unit and standby switchboards shall be provided in order to augment redundancy,

Owner would prefer supply of MV Switchgear from a single manufacturer.

2.06.02 **LV Switchgears and LV Busducts**

The scope of work includes the following for feeding all the LV Loads of the power plant as required. A typical key single line diagram for Aux Power Supply Drawing is enclosed. The design and sizing criteria of the Switchboards shall be as described in subsequent clauses. The major LT Switchgear shall include the following:

- 415 Volt Switchgears
- 415 Volt Motor Control Centers
- 415 Volt AC Distribution Boards
- 220 V DC /48 V DC Distribution Boards
- 415 Volt AC Fuse Boards
- 220 Volt DC Fuse Boards
- Local Motor Starters, Local Control Panels, Local Push Button Stations, Telescopic Trolley/ Welding / Lighting Transformers
- LV Bus ducts

The scope includes the following features:

(a) All switchgear, Motor Control Centers (MCCs) & AC/DC distribution boards, etc. shall have at least 20% or minimum two (whichever is higher) fully equipped switch-fuse modules of each rating as spares, uniformly distributed over different vertical sections.

(b) All switchgears, MCCs, AC/DC boards, etc., shall have at least twenty (20%) per cent of starter modules/MCCB module or at least one module (whichever is higher) of each physical size as spares, equipped for the rating of the largest auxiliary fed from that size of module.

(c) L.V. switchgear shall have duplicate supply source through two incoming line breakers and one bus section breaker, with provision of slow auto changeover from one source to the other in case of failure of one source. Manual provision of planned in-phase transfer, supervised by synchro-check relay, shall also be kept for all L.V. Switchgear.

(d) LT PCC/PMCC for ESP shall have upstream dry / oil type LT Transformers, connected by non-segregated phase bus duct. These transformers shall be fed from 11kV unit switchgears. There shall be one MCC/ACP for each pass of ESP.

(e) Combined Local Starter Panels (CLSP) for group of Ventilation fans (up to and including 5.5 kW motors).

Owner would prefer supply of LT Switchgears and LT Bus ducts from maximum two different manufacturers.

2.06.03 **Numerical Relay Networking**

The Contractor's scope of work shall include the following for all the 11kV, 3.3kV and LV Switchgears for the 800MW unit. The communication architecture and design criteria have been explained elsewhere in the specification.

The Contractor's scope of work shall include the supply, delivery, installation, testing and commissioning of the following:

a) Communicable Numerical Relays (both MV and LV Switchgears) conforming to IEC 61850 protocol.

b) Data Concentrators with redundant Servers (not more than 100 relays shall be connected to one such Data Concentrators); 50 Nos of additional relays (Owner's requirement) shall be considered while designing Data Concentrators

c) LAN Network along with 61850 Ethernet Switches for both MV & LV Switchgears

d) HMI station (with Operator Work Station, Engineering Workstations and printers)

e) Fiber Optical cable & HDPE Conduit (length as required), Terminal equipment such as LIU, etc. (quantity as required), GPS (Two Nos) and Laptops (at least 10 Nos)

f) Any other equipment required to the intended specification

g) Suitable gateway to interface DDCMIS and Numerical relay network (at Data concentrator level)

The typical configuration of such a proposed system is enclosed. The numerical relay network shall include relays on all MV & LV switchgears being supplied under this package. Data concentrators shall be distributed functionally and geographically and shall be interconnected through Fibre Optic cables. Required number of FO ports for interface to DDCMIS with Fibre Optic cables shall be made available on all Data concentrators. Provision for connection and arrangement for termination of Fibre Optic cables from DDCMIS at Data concentrator end shall be made.

2.07.00 **DC System**

2.07.01 Lead acid plante type batteries and battery chargers, with the battery taking over and catering to all the loads connected to the D.C. system, including emergency loads for main plant, switchyard and all other areas in the scope of the contractor, as per system requirement.

2.07.02 Following DC systems shall be supplied to cater to various DC loads in the plant:

a) Two nos. 220V batteries with each battery having Float & Float cum Boost chargers, each rated for 100% capacity for the main plant loads and one 100% capacity Standby Boost charger.

b) 220V battery with Float & Float cum Boost chargers each rated for 100% capacity to meet CHP requirement.

c) 220V battery with Float & Float cum Boost chargers each rated for 100% capacity to meet loads of other far-away auxiliary systems like AWRS, make-up water, ash silo (if any) etc.

d) Two nos. 220V batteries, each battery having Float & Float cum Boost chargers, each rated for 100% capacity for 400kV Switchyard.

e) Two nos. 24V batteries, each battery having Float & Float cum Boost chargers, each rated for 100% capacity for plant DCS system.

2.07.03 Design / sizing criteria shall be as described in subsequent clauses of this Section.

2.07.04 DC System shall be supplied from a single manufacturer.

2.08.00 **Motors**

Motors along with couplings and coupling guards for all rotating auxiliaries covered under this package.

2.09.00 **Electrical Actuators**

Electric actuators with integral starters along with associated accessories etc shall be supplied on as required basis for Valves / Dampers to meet the functional and the other specification requirement

2.10.00 **Variable Frequency Drives**

Variable Frequency Drive (VFD) shall be supplied for ID Fan and any other drive as specified elsewhere or if required by practice. VFD shall be microprocessor based digital controlled with necessary motor protection etc. To minimize the harmonic affects on source side necessary Auxiliary Isolation Transformers shall be provided wherever VFD's are used.

Variable Voltage Variable Frequency (VVFD) Drives shall be considered for controlling Stacker- Reclaimer machine and other equipments as required for Coal Handling Plant.

2.11.00 **Cabling**

2.11.01 Cabling work, but not limited to the following shall be in the scope of the contractor for the complete plant, building, equipment and switchyard system etc. including interplant areas.

(a) Laying of HT power, LT power and control cables.

(b) Cable trestles, cable trays and fittings, along with support system.

(c) Cable glands and lugs.

(d) Straight-through jointing kits for HT XLPE power cable, LT power and control cables.

(e) Cable termination kits for HT XLPE power cables.

(f) Trefoil cable clamps.

(g) Junction boxes.

(h) Galvanized steel pipes/ HDPE/ Hume pipes/ PVC pipes

(i) Miscellaneous items like M.S. sections etc. as required

(j) Fire proof cable penetration sealing system for cable galleries, cable exits etc.

2.11.02 3.3kV power supply to Stacker/ Reclaimer through land mounted junction box, flexible trailing cable with cable reeling drum, transformer mounted on the mobile equipment.

2.11.03 In addition to other drawings, Contractor shall also prepare complete equipment layout drawings, lighting layout drawings including cable tray layout, routing, Power and control cable schedules etc.

2.11.04 Power and Control cable interconnection charts shall also be prepared by bidder and submitted for review.

2.12.00 **Cables**

2.12.01 **HT Power Cables**

HT power cables required to feed the transformer feeders, motor feeders and inter-stage connection with feeders shall be a indicated in typical key single line diagrams for Aux Power Supply, along with necessary termination, lugs and/ glands.

2.12.02 **LT Power and Control Cables**

LT Power and Control cables as required for the complete plant, building, equipment and switchyard system etc.

2.12.03 **Fire Survival Cables**

Fire Survival Cables, suitable for a minimum temperature of 750 deg. C for 3 hours, for both power & control, shall be provided for the following –

i. DC emergency lube oil pump

ii. DC hydrogen seal pump

iii. Turbine lube oil pump/barring gear

iv. DC emergency lighting for main building and service building

v. DC cables for battery to charger & DC distribution boards

vi. Jacking oil pump

vii. Emergency turbine trip in control room

viii. Boiler Turbine : Generator inter trip which include the interconnection between -

- Boiler master fuel trip and turbine trip relays
- Generator trip relays & turbine trip relays
- Generator trip relays & generator breaker
- Generator trip relays & field breaker
- Generator trip relays & unit auxiliary transformer breaker
- Incomer cables for DG board, emergency board, DC lighting board etc.

2.13.00 **Grounding & Lightning Protection**

2.13.01 Scope of grounding system for the power station complex includes in principle:

a) System grounding to facilitate ground fault relaying and to reduce the magnitude of transient over voltage

b) Equipment grounding to provide protection to personnel from potential caused by ground fault currents and lightning discharges.

c) Electronic Equipment grounding for multiple purpose of signal return, safety, EMI control, and antenna function

2.13.02 System grounding involves grounding of the neutrals of generators, transformers, DG sets etc. as discussed in Clause No. 1.12.00.

2.13.03 Scope also includes stable ground grid for grounding of equipment and structures and for maintaining the step and touch potentials within safe limits. An earth mat buried at a suitable depth of 1.0m below the ground will be laid in and around the power station including transformer yard and switchyard. All metallic parts of equipment, supposed to be kept at earth potential, will be connected to the grounding mat. Buildings, structures, transmission towers, plant railroad tracks, the perimeter fencing will also be connected to the grounding mat. The grounding mat will be interconnected with each other with in the plant area. Switchyard earth mat and main plant earth mat shall be connected at minimum two (2) places with test links.

2.13.04 Grounding of equipment body is to be adopted to provide protection to personnel from potential caused by ground fault currents and lightning discharges. Electrical equipment shall be earthed at two points.

2.13.05 Electronic grounding will be a separate earthing system consisting of a number of deep driven earthing rods interconnected with insulated cables and insulated risers are to be installed. This system will be totally isolated from the power equipment earthing mesh risers described above and will be located underground vertically below the electronic equipment room.

2.13.06 Lightning protection system will be installed for protection of the buildings/ structures and equipment against lightning discharge. This will be achieved by providing lightning masts on stacks, cooling towers, power house building, towers in switchyard, flood light towers etc. and connecting these with ground grid.

2.14.00 **Station Lighting**

Station lighting system for the complete plant, buildings and equipment, Lighting fixture complete with lamps & accessories, Lighting Panels, Receptacles, Switch boxes. Conduits, Lighting Wires, Ceiling fans with regulators, Lighting poles, Lighting masts, Earth wires and rods, Junction boxes, Battery operated automatic self contained lighting fixture, Maintenance ladders shall be in the scope of contract.

2.15.00 **DG Set**

2.15.01 One (1) no. Diesel Generator set alongwith acoustic enclosure of stationary type suitable for outdoor installation to be provided. DG sets shall normally be started from plant DDCMIS located in central control room with provision of manual control from D.G. control room.

2.15.02 DG set rating shall be finalized by the EPC contractor for this 800 MW Power plant to serve as emergency power for safe shut down in case of total grid failure, taking into account the following 415 V essential auxiliaries/services :

1	Barring gear	7	BFP Lub Oil Pump
2	AC Emergency Lub Oil Pump	8	Flame Scanner Cooling Air Fan
3	AC Jacking Oil pump	9	Emergency Light & Lift
4	I.D. Fan Lub Oil Pump	10	Station Battery Charger (220V DC & 24V DC)
5	F.D. Fan Lub Oil Pump	11	UPS
6	A.C. Seal Oil Pump	12	Valve & Damper DBs, Soot blower MCC

2.15.03 Separate DG building shall be provided to accommodate DG sets, AMF panels, Auxiliary MCC, Battery & Battery charger, PCC, Protection & Metering panel, Fuel Oil day tank etc.

2.16.00 **EHV Switchyard**

2.16.01 Scope of work is for the supply, erection, testing and commissioning of 400kV air insulated switchyard as shown in the Single Line Diagram. The switchyard shall be complete with a self-contained switchyard control building.

2.16.02 Scope of work shall comprise but not limited to, the design, engineering, manufacture, testing and inspection at manufacturer's works, packing, supply, transportation, transit

insurance, delivery to site, unloading, storage and equipment erection including associated civil and structural works.

2.16.03 400kV switchyard shall have two main bus. Synchronizing of Generator Transformer & protection scheme shall be developed by bidder accordingly. 400kV switchyard shall generally employ one and half breaker switching scheme as indicated in the enclosed Single Line Diagram.

2.16.04 400kV circuits that are required to be created in the switchyard are shown in the enclosed Single Line Diagram.

2.16.05 Equipment and materials broadly in scope of supply and erection:

a) 420 kV SF6 Circuit Breakers

b) 420 kV Disconnecting switch with and without earth switches

c) 420 kV Current Transformers (CTs)

d) 420 kV Capacitive Voltage Transformers (CVTs) / Electromagnetic Voltage Transformer (EMVT)

e) 360 kV Lightning Arresters (LAs)

f) Tubular Bus bars, Twin moose ACSR conductors

g) Tension Insulator & Suspension Insulator string assembly sets

h) Conductor Spacers, Clamps & connectors, sag compensators

i) Bus Post and Disc insulators

j) ACSR Conductors & shielding wires

k) Bay marshalling boxes / AC kiosks

l) Junction box for CT and CVT

m) OLTE & associated equipment (as applicable)

n) Switchyard relay, control and metering panels. The protection system shall be coordinated with the overall protection system of the Plant.

o) Complete Substation Automation System (SAS) consisting of Bay Control Unit, data acquisition system, monitors, printers, fibre optic cable with terminal and interface along with necessary operating and application software.

2.16.06 Scope shall include but not limited to complete switchyard gantry structures, support, platform and miscellaneous structures, switchyard fencing, trenches and complete civil works considering the following:

a) Galvanized steel structures for CB, DS, CT, CVT, EMVT, LA, etc.
b) Galvanized steel gantry structures for main buses.

2.16.07 Scope shall also include the following:

a) Flood Light towers in new and extension areas of 400 kV switchyard.

b) Complete earthing grid (inclusive of supply of MS rod and GI flat) for earthing of all switchyard equipment.

c) Complete direct stroke Lightning Protection using Lightning Mast and/or shield wire and its connection to earth mat.

d) Armored Power and control cables, cabling (including interpole and interpanel), cable support angles, cable trays and accessories as necessary for cable erection such as glands, lugs, clamps for cables, ferrules, cable ties, hume pipe etc. Cable route markers for buried cable trench are also included in the scope.

e) Switchyard Control room (also see clause no. 2.16.01)

f) Substation Automation System (SAS based on IEC 61850 protocol) for control and protection of all 400kV bays

g) AC and Ventilation for control room building

h) ABT based energy metering system for all 400kV feeders.

i) Time synchronization equipment for switchyard and GRP.

j) Islanding scheme for entire 400 KV switchyard bays

k) Protection panels for Generator, GT, UT (GRP) to be located in corresponding CER and to be networked as per the SAS Architecture Drawing. One number generator DR with both slow and fast scan feature to located in GRP

l) All interconnecting facilities between substation automation system and Generating plant control system (Main Plant DDCMIS)

m) All third party interfaces with RLDC and OS Control room as per tender drawing for SAS Architecture

n) Interface between Protection Panels and OLTE system

o) AC & DC power supply system for entire EHV system Bay equipments

2.16.08 Equipment like breaker, Isolators, earth switch, CT, CVT, LA, insulators etc. shall have similar current/voltage rating irrespective of bay capacity to minimize spares and inventory.

2.16.09 All protections of 400kV system as per relevant tender SLDs shall be provided. Protection system shall be provided with Numerical relays compliant with IEC 61850 protocol.

2.16.10 Equipment and materials to be supplied by the Contractor shall form a complete 400kV switchyard. It is in the interest of the Contractor to acquaint himself with the site conditions and scope before submission of offer.

2.16.11 List of items mentioned under the scope is not exhaustive. Any item/items which are not specifically mentioned herein but are required to make the switchyard complete in all respects for its safe, efficient, reliable and trouble free operation shall also be deemed to be included and the same shall be supplied and erected by the Contractor.

2.17.00 **Energy Management System**

2.17.01 The scope includes Energy Management System (EMS) for accounting of the electricity to various segments of electrical system.

2.17.02 EMS will measure, record and display Apparent Power, Phase wise voltage, kW & kVA (reactive) at peak kVA, Power Down Time, Average Power Factor, Line Currents etc. Data collected from various meters will be displayed through various MMI pages of the EDMS system in Control Room.

2.17.03 The location of these meters will be as under following the Central Electricity Authority Regulation guideline:

- At a point after the generator stator terminals and before the tap-off to the UTs.
- On each incoming feeder (excluding tie feeders) of HT buses.
- On LV side of each incoming transformer feeder of LV buses.
- On each incoming feeder of emergency MCC buses from DG PCC and
- On all HT motor feeders.

2.17.04 EMS will generate Power Generation/Consumption and PLF Reports (Shift wise, Daily, Weekly, Monthly & Yearly basis), Single Line Diagram, Breaker on/off status and Load Flow and Reactive Power Flow Report as the minimum.

2.17.05 The system shall be complete with all necessary equipment and accessories like meters as per clause no 2.17.02, Communication Servers, Data Viewers / Operator Console with Printer, RS 485 to TCP/IP Converter, TCP/IP to FO Converter with FO Outputs, Light Interface Unit , Fibre Optics & HDPE Cables, TCP/IP Switches, CAT 5 HUB Cable, Twisted RS 485 Cable etc.

2.18.00 **Erection & Testing Equipment**

2.18.01 It shall be Contractor's responsibility to arrange all the erection and testing equipment as required at the erection stage and thereafter at the pre-commissioning and commissioning stages.

2.18.02 The Contractor's/his sub-contractors' testing equipment to be used at the pre-commissioning and commissioning stages must have valid calibration certificates available for the Owner's examination on demand.

2.18.03 The scope also includes electrical testing/laboratory instruments required by the Owner for his use after plant handover. Details of such electrical testing/laboratory instruments are given in separate Section of this Specification.

2.19.00 **Construction Power**

Owner will arrange power source free of cost at 11 kV level at one point. Street lighting and distribution system to be done by EPC contractor. High mast lighting and adequate lighting from safety point of view is to be provided in the construction area by the EPC contractor.

2.20.00 **Tests**

2.20.01 Various routine, type and acceptance tests shall be carried out on each equipment as listed in the individual sections.

All the tests shall be carried out in the presence of the Owner's representative unless

the witnessing of tests is waived beforehand by the Owner.

The contractor shall give minimum 15 days advance notice of the date when the tests would be carried out.

2.20.02 The contractor shall obtain the Owner's approval for the type test procedure before conducting the type test. The procedure shall specify the test set up, instrument to be used, acceptance norms, interval of recording etc. for the type test to be carried out.

In case the contractor has conducted any of the specified type tests on similar equipment within the last five (5) years as on the date of bid opening, he may submit type test report during detail engineering for waive of conducting such test. This clause shall be applicable to only those type tests which are so indicated in the individual sections. For these tests, only reports are to be submitted.

In case the contractor is not able to submit report of the type test(s) conducted within last five (5) years from the date of bid opening or in the case of type test(s) reports are not found to be meeting to specification requirement, the contractor shall conduct all such test(s) under this contract at no additional cost to the Owner either at third party facility or in presence of Owner's representative and submit the reports for approval.

2.20.03 For short circuit test, proto-type of similar design and of same capacity with documentary evidence shall be submitted for customer approval.

2.20.03 For newly designed equipment, type test shall be conducted at CPRI or Government approved laboratory at the Contractor's cost.

2.20.04 Certified reports of all the tests carried out at the works shall be furnished in six (6) sets to the Owner for approval.

2.20.05 The equipment shall be dispatched from works only after receipt of Owner's written approval of the test reports and MDCC.

2.21.00 **Mandatory Spares**

Contractors scope shall include Mandatory Spares of all equipments as mentioned in the relevant portion of Technical Specification and under Vol. IIA, Sec.-8.

2.22.00 **Scope of Design Work**

2.21.01 Complete basic design engineering and detail design engineering for the plant is in the scope of the EPC Contractor.

2.21.02 Contractor's output of basic design engineering work need to be submitted for review and approval of the Owner/Owner's Engineer. Accordingly, the Contractor's documents containing outputs of the basic design engineering work that need to be submitted 'FOR APPROVAL' are listed in Clause No.1.19.02.

2.21.03 Detailed design engineering shall be in conformity with and based on the approved basic engineering documents only. The Contractor shall submit detail engineering output in the form of drawings, data, curves & manuals in two categories: 'For Reference' and 'For Approval'. Those are listed in individual Sections of Volume V-A and Volume V-B.

3.00.00 **LAYOUT CRITERIA**

3.01.00 **Transformer Yard**

3.01.01 Generator Transformers, Unit Transformers, Unit Auxiliary Transformers and Standby Transformers, Station Auxiliary Transformers will be installed in transformer yard. Spare Generator Transformer shall be placed in transformer yard at a suitable location.

3.01.02 Aux. power transformers for BOP systems will be installed in respective areas of CHP, AHP etc. Only LT dry type (AN cooled) transformers shall be located inside a building.

3.01.04 One or if required two main rail track parallel to power house building shall be provided. It will be interconnected with the rail track in unloading bay. From main track, several branch tracks will be laid up to individual transformer location.

3.01.03 Layout shall allow removal of any transformer on rail track without affecting other transformers, equipment and structure.

3.01.05 Jacking pads will be provided at each right-angled connection of rail track right up to unloading bay.

3.01.06 GT & UT centre lines shall match with the centre line of generator isolated phase busduct. Reasonable space shall be kept in between the transformers and the Power House wall on 'A' row, for convenient and easy handling.

3.01.07 Baffle wall in between single phase GT unit, GT & UTs and between UATs & SATs shall be provided as per applicable codes.

Fire Wall in between other Aux. Power Transformer located in CHP, AHP and Water system areas shall be provided as per applicable codes like TAC recommendations.

Recommendations of TAC shall be followed regarding fire rating of Powerhouse walls/Pump House wall (as applicable) adjacent to transformers depending on the distance of the transformers.

3.01.08 Symmetry shall be maintained for transformer layouts to achieve more or less identical arrangement for each unit, in case of a multiple-unit station.

3.01.09 Equipment layout and cable routing as prepared by the successful bidder shall be subject to revisions upon review by the Owner's Engineer to achieve a neat layout, adequate working space all around, better aesthetics, or to meet statutory regulation and codes. Required changes shall be done by the successful bidder without any commercial implication.

3.01.11 Routing of 11kV and 3.3kV segregated phase busducts, both indoor and outdoor, will be so designed as to cause no interference with any other equipment, cable trays, pipe racks, etc.

3.01.12 Each transformer yard shall be fenced with gate for controlled movement of personnel as well as for removal of transformer without dismantling busduct or cable boxes.

3.02.00 **Criteria of Oil Pit for Transformer**

An oil soak pit under the transformer and a common oil pit (unitized) outside the transformer yard / building at a distance ≥ 2.5 m from the fencing shall be provided for transformer containing ≥ 2000 litre of oil.

3.02.01 Oil Pit under Transformer and its Cooler Bank

a) Gravel filled open oil pit will be provided under each transformer and its cooler bank. The pit shall be such that it can take oil / water surge of 1/3 of the volume of the transformer oil when filled with gravel of size 60 mm.

b) Each pit will be connected to the drain line of at least 150mm diameter stoneware pipe with a minimum slope of 1:96 leading to common oil pit. Level of the pit under the transformer shall be such that there will not be permanent accumulation of oil/water.

3.02.02 Common Oil Pit

A common oil pit (unitized) shall be provided for GT, ST, UTs, UATs and SAT in transformer yard. For other HT aux. power transformers a common oil pit (unitized) shall be provided in transformer yard near respective pump house. All the oil pits shall be connected to the drain line of waste water treatment system.

a) Volume of the oil pit upto bottom level of the oil pit shall be calculated based on : (a) Oil quantity of the largest transformer, (b) Quantity of the water for sprinkler system based on 10.2lit/min/sq.meter of the largest transformer surface area (Ref: TAC manual for water spray system) and 10 minutes operation of spray water system (ref : NFPA 850),.and (c) Quantity of rainwater collected from all associated pits (assumed 5-7% of total oil quantity of associated transformers)

b) The common oil pit will be closed type of water-proof concrete construction.

c) Pit will be provided with two (2) sump pumps. Discharge rate of each pump shall be at least equal to the discharge rate of high velocity water spray system provided for fire-fighting of the transformer. The sump-pump shall have automatic operation by float switch with manual over-riding facility.

d) The sump-pump outlet will be connected to oil-water separator.

f) Transformer fire/drainage of oil will be considered for only one transformer at a time.

3.03.00 **Layout Requirement for BOP Auxiliary Buildings**

3.03.01 CHP Electrical cum Control buildings shall be preferably two (2) storied building. The ground floor shall be used as cable vault room. The first floor (minimum floor level at 3.5metre above cable vault finished floor level) shall accommodate electrical/ communication/monitoring equipment. It shall also accommodate CHP fire fighting panel and HVAC equipment as applicable with associated equipment.

3.03.02 Wagon tippler control room for each wagon tippler shall be located near track. Control room wall facing the track shall be provided with glass panes to have a full view of the coal unloading operation.

3.03.03 Separate Control rooms will be provided at C.W. pump house, ESP control building, Vacuum pump building, Fly ash conveying compressor building, Ash slurry and Ash Water pump house complex, Fuel oil pump house , DM plant building (as required), etc. Control rooms will be generally provided at the same floor level of switchgear room with access between the two.

3.03.04 For areas where Switchgear/MCC /Control Rooms are located at upper floor without any cable spreader room below, adequate height shall be provided for rooms below to accommodate overhead cable racks inside room.

3.03.05 Separate rooms shall be provided for batteries with lay down space for one identical battery set. Battery charger and D.C. distribution board will be located in different room.

3.03.06 Two covered stairs shall be provided on opposite sides of all multistoried building.

3.04.00 **Equipment Layout**

3.04.01 Flexibility shall be kept for handling of equipment without obstruction both during erection and maintenance. Adequate handling facilities, space, door/ rolling shutter of adequate width and height shall be provided for the purpose.

3.04.02 Generator circuit breaker (GCB) shall be located inside the Power House building. If the layout demands locating the GCB at an elevated level, an all-around working platform of adequate size at that level with a permanent staircase shall be provided.

3.04.03 **Layout Requirement for Switchgear Rooms**

a) The following clearances shall be maintained for Switchboards:

		HT Switchboard	LV Switchboard
a)	Front Clearance		
	For one Row of Swgr	2.0m (Min)	1.5m (Min)
	For two Rows of Swgr facing each other	2.5m (Min)	2.0m
b)	Back Clearance		
	For single front	1.5m(Min.)	1.0m (Min.) (c)*
	For double front	NA	1.5m (Min.)
c)	Side Clearance	Min. 800mm plus width of one panel	

b) HT Switchboard clearances shall be followed wherever both LT & HT switch boards are in the same room.

c) * Minimum clearance of 1500 mm shall be provided on rear of panel for single front boards where rear door width is less than 1500 mm and where cable trench/trays below is not obstructed by column foundation/columns.

d) Where the specified front clearance is not adequate for movement of any electrical equipment like dry type L.T. transformers, the same shall be increased to suit transformer dimensions.

3.04.04 Generally all electrical room shall be provided with 2 doors in addition to the shutters provided for handling transformer, switchgear, panels etc.

3.04.05 Air-conditioned rooms shall be provided with double door.

3.04.06 All busduct shall enter the PCC/PMCC from either top or from side.

3.04.07 Clearance of 1500 mm in between adjacent panels in a row or from the side wall/door shall be so decided that handling of shipping section of any board is not obstructed.

3.04.08 Cable spreader room floors shall have all openings properly ridged to prevent water drainage into the room below. In addition proper facilities shall be provided at cable spreader floor to drain the water in case of operation of sprinkler system.

3.05.00 **Interplant Cable Routing**

3.05.01 Interplant cable routing will be on overhead cable trays on pipe cum cable trestle or on cable trestle except where approved by purchaser/consultant. In exceptional case, small stretch of outdoor run of interplant cable routing may be taken through cable trench only with the Owner's prior approval.

3.05.02 Only in specific areas where number of cables are too small compared to the route length, cables may be directly buried underground with prior approval by Owner.

3.05.03 Space for accommodating additional trays, which may come in future, shall be provided in the cable route. The Contractor shall provide such trays without any extra cost implication to purchaser.

3.05.04 Cable trestles shall have a minimum 600mm clear walk way all along its routes and shall have maintenance platforms as required.

3.05.05 Cable in CHP area shall be generally routed through the conveyor gallery / tunnel, TP / Buildings by separate supporting structures, Pipe cum cable bridge. The cables shall be laid in vertical trays.

3.05.06 The bottom of the steel supporting structure shall be generally at 2.5 m above the grade level except for road crossing and rail crossing where the same shall be 8.0 m and 9.0m respectively above finished grade level.

3.05.07 Routing of cables shall be designed taking care of the following:

(a) Separate trays shall be provided for H.T., L.T., control and instrumentation and FS cables.

(b) LT mutlicore power cables shall be laid touching each other in single layer & touching formation.

(c) LT single core cable in trefoil formation shall be laid with a distance of four times the diameter of cable between trefoil centre lines.

(d) Control and instrumentation cables shall be laid in maximum of two layers formation.

(e) Single core HT power cables shall be laid on trefoil formation with a distance of four times the diameter of cable between trefoil centre lines.

(f) Multi core HT power cables shall be laid in single layer & touching formation.

(g) Normally cable trays shall be designed with 70% fill-in criteria and conduit 40% fill-in criteria.

(h) Separate cable tray shall be provided for Fire Survival cables.

4.00.00 **SIZING CRITERIA FOR ELECTRICAL EQUIPMENT**

4.01.00 **Generator**

4.01.01 Generator and its excitation system shall have a capability at least matching the declared maximum continuous rated output of the associated steam turbine for the design maximum secondary cooling water temperature (ECW temperature) at/with:

(a) all power factors between 0.85 lagging and 0.95 leading

(b) +3% to -5% frequency variation,

(c) terminal voltage variation of +/- 5% and

(d) combined voltage & frequency variation of 5%.

4.01.02 It shall be ensured that when the Generator is working at this capability and design maximum secondary cooling water temperature (ECW temperature), no part of the Generator shall attain a temperature in excess of the temperature limits specified for Thermal Class 130 (B) insulation as per IEC-60034.

4.01.03 Also the generator and its excitation system shall be capable of continuous stable operation without any excessive temperature rise at the peak output of the associated steam turbine under VWO & HP heater out condition, etc. as available for design maximum secondary cooling water temperature (ECW temperature) at /with

(a) all power factors between 0.85 lagging and 0.95 leading

(b) +3% to -5% frequency variation,

(c) terminal voltage variation of +/- 5% and

(d) combined voltage & frequency variation of 5%.

Temperature of different parts may exceed those permissible for Thermal Class 130 (B) insulation under such operating conditions, but shall be lower than those permissible for Thermal Class 155 (F) insulation as per IEC-60034.

4.01.04 Capacity with one gas cooler out

Generator shall be capable of delivering at least two-third of the rated and maximum continuous MVA with ten (10) percent of tubes in each cooler plugged without exceeding the temperature limits of thermal class 130 (B) and thermal class 155 (F) respectively.

4.02.00 **Generator Transformer**

4.02.01 Rating of the Generator Transformer shall be suitable for continuous stable operation of unit at the rated nominal output at all power factors between 0.85 lagging and 0.95 leading. The minimum rating of the each single phase GT shall be 330 MVA (1-Phase).

4.02.02 Further the Generator transformer shall be rated for evacuation of peak net output (peak output of the generator under VWO/ HP heater out condition etc. less 50% of unit auxiliary power consumption i.e. one of the unit board fed from Standby Transformer) as indicated above at Clause 4.01.03, at all power factors between 0.85 lagging and 0.95 leading, continuously.

4.03.00 **Unit & Standby Transformers**

4.03.01 **Unit Transformer**

a. Unit transformers would be sized to meet the loads corresponding to auxiliaries required to meet the peak load requirements of the unit.

b. Each unit transformer shall be sized for the following:

The loads of a set of unit auxiliaries (including MDBFP) corresponding to 60% BMCR operation plus
The connected station load plus
Owner's load of ***6.3MVA*** for other purposes like colony etc. (if specified elsewhere), plus
Loads due to outage of largest rated outgoing transformer feeder on other bus, plus
10% margin on the aforesaid mentioned sum
Multiplied by no load voltage correction factor as defined later

c. The minimum ONAF rating of each Unit Transformer shall be 50MVA.

4.03.02 **Stand by Transformer**

a. The Stand by transformer shall be sized to cater outage of one fully loaded Unit Transformer under the condition specified above plus any other loads connected on each winding/station bus. A margin of 10 % and no load voltage correction factor as defined later shall be considered.

b. The minimum ONAF rating of each Stand-by Transformer shall be 100MVA.

4.03.03 Rating of each Unit Transformer shall be so chosen as to limit transient voltage dip on DOL starting of the largest rated 11kV motor (may be the BFP motor), to less than 20% while also limiting the maximum MV Switchgear fault level to 50kA(rms).

4.03.04 No Load Voltage Correction Factor (= Transformer No Load voltage/ rated bus Voltage) shall be used for sizing of all transformers i.e.
Transformer size = the calculated size X no load voltage correction factor (11.5/11, 3.6/3.3, 0.433/0.415).

4.03.05 All the transformers shall be sized based on the maximum load expected to be fed by the transformers. All auxiliary transformers except Unit and Standby Transformers shall be sized so as to have 20% margin at design ambient conditions after considering final load requirements at peak conditions.

4.03.06 The successful bidder shall determine voltage regulation and short circuit levels through system study considering various conditions of operations, to ensure that these are within permissible value.

4.04.00 **Auxiliary and LT Transformers**

Adequate number of auxiliary transformers shall be provided to meet the demand on 3.3kV and 415V systems under most onerous conditions, with the criteria that each 3.3kV / 415V switchgear / MCC / DB shall be fed by 2x100% transformers / feeders, and these shall be rated to carry the maximum load expected to be imposed.

CHP auxiliary transformers shall be sized to meet the demand on simultaneous operation of both the streams.

4.05.00 **Bus ducts and Cables**

4.05.01 The short circuit rating of the generator main busduct will correspond to higher of the fault current contributions from generator or transformer side while the tap-off busducts will be designed for sum of the fault contributions from generator and GT side.

4.05.02 HT and LT power cables shall be selected on the basis of current carrying capacity, short circuit rating and permissible maximum voltage drop at equipment terminals during normal operation and starting conditions. Voltage drop of the cable during motor starting condition shall be limited to 15% and during full load running condition shall be limited to 3 % of the rated voltage. Other outgoing feeder /transformer feeder shall be limited to 3%.

4.05.03 Cables and bus ducts feeding switchboards from transformers shall be sized based on transformer rating and considering the maximum negative voltage variations envisage in the specifications. All derating factors applicable shall be taken into consideration.

4.05.04 Cables and bus ducts feeding transformers shall be sized based on current ratings of transformer at the minimum voltage tap of the transformer. All derating factors applicable shall be taken into consideration.

4.05.05 All other cables/bus-ducts shall be sized based on the load demand under most onerous conditions.

4.05.06 Cables shall be derated for the site ambient and ground temperatures, grouping and soil resistivity and cable laying configuration.

4.05.07 Cables, for circuit breaker controlled feeders, shall withstand the short circuit current for the fault clearing time. 0.16 sec. for outgoing feeder, 0.5 sec. for tie breaker and 1.0 sec. for Incomer.

4.05.08 For the fuse/MCCB/Circuit breaker protected circuits, the cable size shall depend upon full load current subject to voltage drop limited to 3% during running of all feeders and 15% during starting for motor feeders. In addition, transformer regulation shall also be considered for loads fed from 415V PMCC. In case of other out going feeder voltage drop shall be limited to 3%. For welding receptacle, 3% running drop shall only be considered.

4.05.09 For loads fed from local panels, the total running voltage drop in cable from 415V PMCC to local panel and from local panel to individual motor shall be limited to 3% at full load motor current while the same during starting shall be limited to 15%.

4.05.10 Current rating of motor feeder/cables should be at least 125% of full load current.

4.05.11 For Flap Gate, Rack & Pinion Gate, Electrical Hoist - 3% running drop and 10% starting drop shall be considered with reference to 415 V bus voltage.

4.05.12 Minimum size of control cables shall be 2.5 sq. mm copper and for power cable shall be 6.0 sq.mm aluminium.

4.06.00 **DC System**

4.06.01 Procedure for estimating battery capacities shall be as per guide-lines stipulated in latest revision of IEEE Std. 485 for Lead acid Battery. Derating factor for prolonged float charging shall be duly taken into account, as applicable, in estimating battery capacity.

4.06.02 Sizing of all batteries except those for the Switchyard shall be done based on different types of continuous and intermittent loads including motor starting for the complete emergency duration specified as per the system requirement. All intermittent loads shall be considered with minimum 1 minute duration. The no. of cells, end cell voltage shall be considered based on the minimum and maximum voltage window and cable drop etc as per system requirement. Minimum electrolyte temperature for battery sizing purpose shall be considered as 5ºC lower than the annual mean lowest ambient temperature of the site.

4.06.03 Total DC load shall include load for Owner's facilities also, as identified elsewhere in the Specification.

4.06.04 DC scheme shall ensure that each critical load is fed from two different bus sections. DCDBs shall provide adequate number of feeders on each section.

4.06.05 Each of the batteries shall be sized to supply total DC load of that area at an acceptable voltage for at least ten (10) hours under complete blackout condition. The minimum size of battery for BTG area shall be 1500AH for lead acid Planté type.

4.06.06 CHP battery shall be sized to supply DC lighting for at least one hour under complete blackout condition.

4.06.07 Sizing of Switchyard battery shall take into account the emergency lighting in Switchyard control room for a period of 1 hour. In addition to this all continuous DC loads of relay & control panels/OLTE panels and interlocking coils of isolators/earth switches shall be considered including requirement of line bays (where applicable), for a duration of 3 hours. Battery should be sized considering the worst of the following conditions:

(i) Simultaneous operation of the maximum number of breakers & associated equipments in case of bus fault in the switchyard.

(ii) Operation of Breaker failure relay (LBB relay)

4.06.08 Float charger shall be sized to carry the total DC continuous load and the trickle charging current of the battery plus a 25% margin. The charger shall also be capable of delivering the rated load under the specified voltage and frequency variations of incoming AC supply.

4.06.09 Boost/Float-cum-boost charger shall be sized to restore the fully discharged battery to full charge condition in ten (10) hour for lead-acid battery with 25% margin over maximum charging rate or to operate as a float charger with duty requirement, whichever is greater.

4.07.00 **DG Set**

4.07.01 DG set shall be able to meet safe shut down of the plant under emergency condition and in case of total power failure. It shall be sized to meet 100% of essential load requirements of the generating unit including starting of the largest motor (DOL) with other loads connected without exceeding the permissible starting voltage drop. Some of the vital station auxiliaries/systems like battery chargers of switchyard, auxiliary

supplies of instrument/plant air compressors, emergency air conditioning and ventilation system loads shall also be fed from DG set supply.

4.07.02 Minimum size of DG shall be 1500kVA.

4.08.00 **UPS System**

UPS System provides a regulated and uninterrupted single phase A.C. power, within specified tolerances, to critical station loads during normal and emergency operation. Capacity of inverter output shall be computed by the contractor considering the above requirement. 25% spare margin shall be kept on the total of above requirement. UPS shall be 415V AC, 3 phase input and 240V AC, 1 phase output.

The UPS system shall have 2x100% parallel redundant chargers and inverters, 2x100% PLANTE type battery bank, bypass line transformers and voltage stabiliser, static switch, manual bypass switch, 2x100% AC/DC distribution boards, other necessary protective devices and accessories.

4.09.00 **Electrical Laboratory Equipment**

Electrical laboratory equipment shall be supplied for testing various electrical equipment/devices during operation and maintenance of plant.

5.00.00 **PROVEN-MAKE CRITERIA FOR ELECTRICAL EQUIPMENT**

5.00.01 To read “Bidder/Contractor” in place of “Sub-vendor” in the following clauses in case the Bidder himself is the OEM.

5.01.00 **Isolated Phase Busduct**

5.01.01 Sub-vendor should have designed, manufactured, type tested, supplied, erected and commissioned Isolated Phase Bus duct for a turbo-generator of at least 500MW, which is in successful operation for a period of not less than two (2) years as on date of Techno-Commercial bid opening.

And

5.01.02 Sub-vendor should have firm Purchase Order for manufacture and supply of Isolated Phase Bus duct for a turbo-generator set of at least 660MW as on date of Techno-Commercial bid opening.

5.02.00 **Power Transformers**

5.02.01 Sub-vendor should have designed, manufactured, installed / supervised installation and commissioned/supervised commissioning of at least two (2) nos. (one each at two different project sites) of 400 kV or above class Generator Transformers of at least (a) 200 MVA capacity per single phase unit or (b) 330MVA capacity three phase transformer as a single unit, which should be in successful operation for at least two(2) years as on date of Techno-Commercial bid opening.

Or

5.02.02 Sub-vendor who have designed, manufactured, installed/supervised installation and commissioned/supervised commissioning of at least two (2) no. 220 kV or above class transformer which are in successful operation for two (2) years as on date of Techno-Commercial bid opening and have established manufacturing facilities for 400 kV class transformers based on technological support of its associate or collaborator, can also be considered Qualified provided his associate or collaborator

meets the qualifying requirement stipulated at 5.02.01 above. The associate will be fully responsible for design, testing, supply, erection, commissioning and putting into satisfactory operation.

5.03.00 **Auxiliary Oil Filled/ Dry type Transformers**

5.03.01 Sub-vendor should have manufactured & supplied at least two numbers (one each at two different project sites) of at least highest offered rating oil filled transformers which must be in successful operation for a period of at least two (2) years as on date of Techno-Commercial bid opening.

5.03.02 Sub-vendor should have his own facilities for conducting all routine and type tests as per IS: 2026 (except short circuit test).

5.03.03 The transformer considered for the above (cl. no. 5.03.01) should have been successfully short circuit tested.

5.04.00 **11 kV & 3.3kV Switchgears**

5.04.01 Sub-Vendor should have designed, manufactured and supplied at least one hundred (100) numbers of 11kV and /or 3.3kV Switchgear panels complete in all respects with fault rating of at least 50kA for one (1) second and 125kA (peak), which are in successful operation for a period of at least two (2) years as on date of Techno-Commercial bid opening.

5.04.02 Sub-Vendor should have manufactured and supplied at least one hundred (100) numbers of Vacuum Circuit breakers for 11kV and /or 3.3kV panels with a rating of 50kA rms BREAKING, 125kA peak MAKING and 50kA withstand for one (1) second, which shall be in successful operation in 3.3kV or higher voltage application for a period of at least two years as on date of Techno-Commercial bid opening.

5.04.03 Sub-Vendor's associate or collaborator meets requirement stipulated at 5.04.01 & 5.04.02 stipulated under Route 1.

5.04.04 The associate will be fully responsible for design, supervision of manufacturing and testing, and satisfactory operation of the equipment.

5.05.00 **LT Switchgear**

5.05.01 Sub-Vendor should have manufactured and supplied at least a total of five hundred (500) nos. draw out type air circuit breaker panels and / or draw out motor control centre panels complete in all respects with fault rating of at least 50 kA for 1 sec. and 105 kA (peak) under a single order and these panels shall be in successful operation for a period of not less than two (2) years as on date of Techno-Commercial bid opening.

5.06.00 **Numerical Relays & Networking**

5.06.01 Numerical Relays shall be offered from a Manufacturer who has manufactured and supplied and successfully configured at least 100 No's of Numerical Relays complying with IEC 61850 used for application in Feeder Protections/Transformer Protections/Motor protections. These relays shall be in successful operation for at least one (1) year as on date of Techno-Commercial bid opening.

5.06.02 The Numerical Relay Network system be offered from a Integrator /Manufacturer who has designed and successfully done FAT for a network on IEC 61850 with least 100 nos of Communicable Numerical Relays prior to date of Techno-Commercial bid opening.

5.07.00 **HT Motor**

5.07.01 **CW Motor**

The CW pump drive motors should be sourced from a manufacturer who have supplied at least two nos. of 11KV or above, vertical, DOL started squirrel cage induction motors of cooling type specified having rating 2000KW or more and motor speed not exceeding 500 rpm synchronous, which are in successful operation for at least two (2) years as on the date of Techno-Commercial bid opening.

5.07.03 **BFP Motor**

The offered Squirrel cage Induction motor shall be from such a manufacturer who has manufactured and supplied motor of 10MW or above rating, which is in successful operation in at least one (1) plant for a period not less than one (1) year as on the date of Tech no-Commercial bid opening.

5.07.04 **ID Fan Motor**

The offered Squirrel cage Induction motor shall be from such a manufacturer who has manufactured and supplied motor of 4MW or above rating, which is in successful operation in at least one (1) plant for a period not less than one (1) year as on the date of Techno-Commercial bid opening.

5.08.00 **LT Control Cables**

Sub-Vendor should have manufactured and supplied as on date of Techno-Commercial bid opening the following:

(a) At least 300 km of PVC insulated, PVC sheathed stranded copper conductor 1.1 kV grade cables in one single contract

(b) At least one (1) km of Flame retardant low smoke cables.

5.09.00 **LT Power Cables**

Sub-Vendor should have manufactured and supplied as on date of Techno-Commercial bid opening the following:

a) At least 100 km of aluminium conductor, XLPE insulated, PVC sheathed power cables of 1.1 kV or higher grade in one single contract

b) At least 100 km of aluminium conductor, PVC insulated, PVC sheathed power cables of 1.1 kV or higher grade in one single contract

c) At least one (1) km of flame retardant low smoke cables.

d) 1.1kV or higher grade power cable of minimum 630sq.mm. conductor size.

5.10.00 **HT Cables**

Sub-Vendor should have manufactured and supplied following cables, as on date of Techno-Commercial bid opening

(a) At least 50kms of XLPE insulated power cables of 6.35/11 kV or higher

voltage grade, executed in one or more orders.

(b) At least one (1) km of flame retardant low smoke cables of any voltage level.

5.11.00 **DG Sets**

Sub-Vendor should have supplied at least two (2) numbers of DG set of rating not less than 1250 kVA, at least one (1) each at two (2) different installations, which should be in successful operation for at least two (2) years as on date of Techno-Commercial bid opening. The make of the DG set (Alternator and Engine) shall be same as that of reference plant DG set.

5.12.00 **DC Batteries**

Sub-Vendor should have manufactured and supplied at least two (2) numbers of highest offered rating or above of high discharge type Plante positive plate type battery at least one (1) each at two (2) different industrial installations, which should be in successful operation for at least two (2) years as on date of Techno-Commercial bid opening.

5.13.00 **Battery Charger**

Sub-Vendor should have manufactured and supplied at least two (2) numbers of static automatic voltage regulator type Battery Chargers of highest offered rating or above, at least one (1) each at two (2) different industrial installations, which should be in successful operation for at least two (2) years as on date of Techno-Commercial bid opening.

5.14.00 **Generator Circuit Breaker (GCB)**

Sub-Vendor should have designed, manufactured, tested, supplied, erected & commissioned/supervised erection and commissioning of at least two numbers of generator circuit breakers (sulphur hexaflouride) of ratings not below that offered for this project, which are in successful operation for at least two (2) years as on date of Techno-Commercial bid opening. The ratings will constitute of:

a) Rated voltage and current rating.

b) Rated short circuit current carrying capability for one (1) second.

c) Rated short circuit peak making and latching current carrying capability.

d) Rated symmetrical RMS short circuit current interrupting capability.

The type (sulphur hexaflouride) and rating of breaker offered should also have been successfully type tested as on date of Techno-Commercial bid opening.

5.15.00 **400kV Switchyard Equipment (AIS)**

5.15.01 SF6 Circuit Breakers being offered should be from manufacturer who has manufactured and supplied minimum fifteen (15) nos. of SF6 Circuit Breakers of offered voltage class or higher, and which must have been in successful operation for a minimum period of two (2) years as on date of Techno-Commercial bid opening.

5.15.02 Disconnecting switches being offered should be from manufacturer who has manufactured and supplied minimum thirty (30) nos. of Disconnecting switch of offered voltage class or higher, suitable for air insulated substation/ switchyard and which must have been in successful operation for a minimum period of two (2) years as on date of Techno-Commercial bid opening.

5.15.03 400kV Instrument Transformers being offered should be from manufacturer who has manufactured and supplied minimum fifteen (15) nos. of single phase Instrument Transformers of offered voltage class or higher, suitable for air insulated substation/ switchyard and which must have been in successful operation for a minimum period of two (2) years as on date of Techno-Commercial bid opening.

5.15.04 400kV Surge Arrestors being offered should be from manufacturer who has manufactured and supplied minimum fifteen (15) nos. of single phase Surge Arrestors of offered voltage class or higher, suitable for air insulated substation/ switchyard and which must have been in successful operation for a minimum period of two(2) years as on date of Techno-Commercial bid opening.

5.15.05 The Erection Contractor must have supplied, constructed, installed and commissioned at least two 400 kV substations each having at least 5 number bays as a turnkey supplier and such substations must have been in successful commercial operation for at least two years as on date of Techno-Commercial bid opening.

5.16.00 **Substation Automation System & Protective Relays**

5.16.01 The Substation Automation System offered with distributed architecture should have been in successful operation in at least one (1) Substation/Switchyard of not less than 220 kV class for a minimum period of one(1) year as on date of Techno-Commercial bid opening.

5.16.02 The Generator Protection Relays, the Bay Protection Units including the Busbar protection and the energy metering System offered should be from manufacturer(s) who have manufactured and supplied the offered type of devices for respective equipment, which must have been in successful operation in a 500 MW or above unit / 220 kV class or above Substation/Switchyard for a minimum period of one (1) year as on the date of Techno-Commercial bid opening.

ANNEXURE-A

TECHNICAL PARAMETERS
FOR
ELECTRICAL SYSTEM

1.00 **E.H.V. SYSTEM DATA**

a) 400kV SYSTEM

1	Type of busbar scheme to be adopted	Two main bus
2	System voltage to be adopted	400 kV
3	System Earthing	Solidly grounded
4	Short circuit level	40 kA
5	Maximum system voltage	420- kV
6	Minimum system voltage	380 kV
7	Number of outgoing feeder lines	Refer Specification.
8	B.I.L. for equipment	1425 kVp
9	Short circuit current duration for which the substation have to be designed	1 sec.

2.00 **M.V. SYSTEM DATA**

1	Voltage System	11 kV & 3.3 kV
2	System of earthing to be adopted for both unit and station system	Resistance grounding
3	Limiting Ground Fault current Value	300 Amp.
4	Type of Bus transfer scheme to be followed for change over from one source to other.	Fast bus transfer followed by slow bus transfer for 11kV for various Switchboard as specified. Slow bus transfer for 3.3kV or as specified.
5	Type of switchgear to be selected	Vacuum circuit breaker
6	a) Connection between transformer and 11 kV& 3.3 kV switchgear	Busduct
	b) Connection between transformer and 11 kV & 3.3 KV NGR	Cable
7	Short circuit current	11kV - 50 kA 3.3kV – 50kA
8	Duration of short circuit current	1 sec.

3.00 **L.V. SYSTEM DATA**

1	Nominal 3 phase voltage to be selected for L.V. system	415 V
2	System Earthing	Solidly grounded
3	Type of Breaker to be selected	Air break
4	Type of outgoing feeder switching device in L.T. MCC	MCCB
5	M.C.C. type	Single front/Double front Fully draw out type
6	Short circuit level for 1 sec	50 kA

4.00 **DC SYSTEM DATA**

1	Nominal voltage to be selected for DC system	220 V
2	Type of Incoming / outgoing feeder switching device	Double pole Switch-Fuse
3	DCDB type	Single front/Double front Fixed type
4	Short circuit level for 1 sec	To be decided by Bidder 25 kA (minimum)

5.00 **UPS SYSTEM DATA**

1	Nominal voltage to be selected for UPS system	240 V, 1-Ph, 50 Hz, AC
2	Type of Incoming / outgoing feeder switching device	MCCB
3	UPSDB type	Single front, Fixed type, Modular construction
4	Short circuit level for 1 sec	To be decided by bidder 25 kA (minimum)

VOLUME: V-A

SECTION-II

TECHNICAL SPECIFICATION FOR A.C. & D.C. MOTORS

CONTENT

CLAUSE NO.	DESCRIPTION
1.00.00	SCOPE
2.00.00	CODES & STANDARDS
3.00.00	SERVICE CONDITIONS
4.00.00	TYPE AND RATING
5.00.00	PERFORMANCE
6.00.00	SPECIFIC REQUIREMENTS
7.00.00	ACCESSORIES
8.00.00	TESTS
9.00.00	DRAWINGS, DATA & MANUALS

ATTACHMENT

ANNEXURE-A	DESIGN DATA

VOLUME: V-A

SECTION-II

TECHNICAL SPECIFICATION FOR A.C. & D.C. MOTORS

1.00.00 **SCOPE**

1.01.00 This section covers the general requirements of the drive motors for power station auxiliary equipment.

1.02.00 Motors shall be furnished in accordance with both this general specification and the accompanying driven equipment specification.

1.03.00 In case of any discrepancy, the driven equipment specification shall govern.

2.00.00 **CODES & STANDARDS**

2.01.00 All motors shall conform to the latest applicable IS, IEC and CBIP Standards/ Publications except when otherwise stated herein or in the driven equipment specification.

2.02.00 Major standards, which shall be followed, are listed below other applicable Indian Standards for any component part even if not covered in the listed standards shall also be followed:

i) IS-325

ii) IS-12615

iii) IEC-60034

3.00.00 **SERVICE CONDITIONS**

3.01.00 The motors will be installed in hot, humid and tropical atmosphere highly polluted at places with coal dust and/or fly ash.

3.02.00 Unless otherwise noted, electrical equipment/system design shall be based on the service conditions and auxiliary power supply given in the annexure to this specification.

3.03.00 For motor installed outdoor and exposed to direct sunrays, the effect of solar heat shall be considered in the determination of the design ambient temperature.

4.00.00 **TYPE AND RATING**

4.01.00 **A.C. Motors**

4.01.01 Motors shall be general purpose, constant speed, squirrel cage, three/single phase, induction type.

4.01.02 All motors shall be rated for continuous duty. They shall also be suitable for long period of inactivity.

4.01.03 LT motor & HT motor name-plate rating at 50°C shall have at least 15% margin and 10% margin respectively over the input power requirement of the driven equipment at rated duty point unless stated otherwise in driven equipment specification.

4.01.04 The motor characteristics shall match the requirements of the driven equipment so that adequate starting, accelerating, pull up, break down and full load torques are available for the intended service.

4.01.05 Motors efficiency class shall be IE1, IE2 as per latest version of IEC-60034.

4.02.00 **D.C. Motors**

4.02.01 D.C. motor provided for emergency service shall be shunt/compound wound type.

4.02.02 Motor shall be sized for operation with fixed resistance starter for maximum reliability.

Starter panel complete with all accessories shall be included in the scope of supply.

5.00.00 **PERFORMANCE**

5.01.00 **Running Requirements**

5.01.01 Motor shall run continuously at rated output over the entire range of voltage and frequency variations as given in the annexure.

5.01.02 The motor shall be capable of operating satisfactorily at full load for 5 minutes without injurious heating with 75% rated voltage at motor terminals.

5.01.03 The motor shall be designed to withstand momentary overload of 60% of full load torque for 15 second without any damage.

5.02.00 **Starting Requirements**

Motor shall be designed for direct online starting at full voltage. Breakaway starting current as percentage of full load current for various motor rating shall not exceed the given below-

Motors up to 1500kW	-	600% subject to IS tolerance of plus 20%.
Motors above 1500kW	-	450% not subject to any positive tolerance.

5.02.01 The motor shall be capable of withstanding the stresses imposed if started at 110% rated voltage.

5.02.02 Motor shall start with rated load and accelerate to full speed with 80% rated voltage at motor terminals except mill motor. Mill motor shall start with rated load and accelerate to full speed at 85% of the rated voltage at the motor terminals.

5.02.03 a) Two hot starts in succession with motor initially at normal running temperature.

b) Pump motor subject to reverse rotation shall be designed to withstand the stresses encountered when starting with shaft rotating at 125% rated speed in reverse direction.

5.02.04 The motors shall be designed to withstand 120% of rated speed for 2 minutes without any mechanical damage.

5.03.00 **Stress During Bus Transfer**

5.03.01 The motor may be subjected to sudden application of 150% rated voltage during bus transfer, due to the phase difference between the incoming voltage and motor residual voltage.

5.03.02 The motor shall be designed to withstand any torsional and/or high current stresses, which may result, without experiencing any deterioration in the normal life and performance characteristics.

5.04.00 **Locked Rotor Withstand Time**

5.04.01 The locked rotor withstand time under hot condition at 110% rated voltage shall be more than motor starting time by at least 3 seconds for motors up to 20 seconds starting time and by 5 seconds for motor with more than 20 seconds starting time.

5.04.02 Starting time mentioned above is at minimum permissible voltage of 80% rated voltage.

5.04.03 Hot thermal withstand curve shall have a margin of at least 10% over the full load current of the motor to permit relay setting utilising motor rated capacity.

6.00.00 **SPECIFIC REQUIREMENTS**

6.01.00 **Enclosure**

6.01.01 All motor enclosures for outdoor, semi-outdoor & indoor application shall conform to the degree of protection IP-55 unless otherwise specified. Motor for outdoor or semi-outdoor service shall be of weather-proof construction with canopy.

6.01.02 For hazardous area approved type of increased safety enclosure shall be furnished.

6.02.00 **Cooling**

6.02.01 The motor shall be self ventilated type, either totally enclosed fan cooled IC 411(TEFC), totally enclosed tube ventilated IC 511(TETV) or closed air circuit air- cooled IC 611(CACA).

6.02.02 For large capacity motors not available with above type of cooling may be accepted with IC 81W or IC 91W, closed air circuit water cooled (CACW) subject to the approval of the owner.

6.03.00 **Winding and Insulation**

6.03.01 All insulated winding shall be of copper.

6.03.02 All motors shall have class F insulation but limited to class B temperature rise.

6.03.03 Windings shall be impregnated to make them non-hygroscopic and oil resistant.

6.04.00 **Tropical Protection**

6.04.01 All motors shall have fungus protection involving special treatment of insulation and metal against fungus, insects and corrosion.

6.04.02 All fittings and hardwares shall be corrosion resistant.

6.05.00 **Bearings**

6.05.01 Motor shall be provided with antifriction bearings, unless sleeve bearings are required by the motor application. Bearings shall be rated for minimum service life of 40,000Hrs.

6.05.02 Vertical shaft motors shall be provided with thrust and guide bearings. Thrust bearing of tilting pad type is preferred.

6.05.03 Bearings shall be provided with seals to prevent leakage of lubricant or entrance of foreign matters like dirt, water etc. into the bearing area.

6.05.04 Sleeve bearings shall be split type, ring oiled, with permanently aligned, close running shaft sleeves.

6.05.05 Grease lubricated bearings shall be pre-lubricated and shall have provisions for in-service positive lubrication with drains to guard against over lubrication. LT motors 15kW and above shall be provided with external greasing arrangement.

6.05.06 Oiled bearing shall have an integral self cooled oil reservoir with oil ring inspection ports, oil sight glass with oil level marked for standstill and running conditions and oil fill and drain plugs.

6.05.07 Forced lubricated or water cooled bearing shall not be used without prior approval of Owner.

6.05.08 Lubricant shall not deteriorate under all service conditions. The lubricant shall be limited to normally available types with IOC equivalent.

6.05.09 Bearings shall be insulated as required to prevent shaft current and resultant bearing damage.

6.06.00 **Noise & Vibration**

6.06.01 All HT motors shall be provided with vibration pads for mounting of vibration detectors. Vibration monitoring devices shall be provided on DE and NDE side in x&y direction with remote DCS monitoring, alarm and tripping.

6.06.02 The maximum double amplitude vibrations for HT motors upto 1500 rpm shall be 25 microns and 15 microns upto 3000 rpm. For 415V motors, maximum double amplitude vibrations upto 1500 rpm shall be 40 microns and 15 microns upto 3000 rpm.

6.06.03 The noise level shall not exceed 85db (A) at 1.5 meters from the motor.

6.07.00 **Motor Terminal Box**

6.07.01 Motor terminal box shall be detachable type and located in accordance with Indian Standards clearing the motor base- plate/ foundation

6.07.02 Terminal box shall be capable of being turned 360 Deg. in steps of 180 Deg. for HT motors and 90 Deg. for LT motors unless otherwise approved.

6.07.03 The terminal box shall be split type with removable cover with access to connections and shall have the same degree of protection as motor.

6.07.04 The terminal box shall have sufficient space inside for termination/connection of XLPE insulated armoured aluminium cables.

6.07.05 Terminals shall be stud or lead wire type, substantially constructed and thoroughly insulated from the frame.

6.07.06 The terminals shall be clearly identified by phase markings, with corresponding direction of rotation marked on the non-driving end of the motor.

6.07.07 The terminal box shall be capable of withstanding maximum system fault current for a duration of 0.25 sec.

6.07.08 For 11000V and 3300V motor, the terminal box shall be phase-segregated type. The neutral leads shall be brought out in a separate terminal box (not necessarily phase segregated type) with shorting links for star connection.

6.07.09 Motor terminal box shall be furnished with suitable cable lugs and double compression brass glands to match with cable used.

6.07.10 The gland plate for single core cable shall be non-magnetic type.

6.07.11 Minimum clearances to be provided between phase to phase and phase to earth shall be as under-

Voltage Rating of Motor		Minimum Ph-Ph & Ph-Earth clearance
0.415 kV	:	25 mm
3.3 kV	:	65 mm
11.0 kV	:	140 mm

Note: In case it is not possible to maintain these clearances, the live parts shall be totally insulated from earth and other Phases. Adequate clearances shall be provided for cable connections.

6.08.00 **Grounding**

6.08.01 The frame of each motor shall be provided with two separate and distinct grounding pads complete with tapped hole, GI bolts and washer.

6.08.02 The grounding connection shall be suitable for accommodation of ground conductors as follows:

Rating			Conductor Size
Above	Up to		
-------	5.5 kW	:	8 SWG GI Wires.
5.5 kW	22 kW	:	25mm X 4mm GS Flat.
23 kW	55 kW	:	40mm X 6mm GS Flat.
56kW	174kW	:	50mm X 8mm GS Flat.
175kW	ABOVE	:	75mm X 10mm GS Flat.

6.08.03 The cable terminal box shall have a separate grounding pad.

6.09.00 **Minimum Cable Size for LT & HT Motors shall as be as follows-**

a) For 415V, 3-Ph, LT Motors-

Rating			Cable Size
Above	Up to		
-------	5.5 kW	:	1R X 3C X 6 Sq.mm
5.5 kW	11 kW	:	1R X 3C X 10 Sq.mm
11 kW	22 kW	:	1R X 3C X 35 Sq.mm
22 kW	37.5 kW	:	1R X 3C X 70 Sq.mm.
37.5kW	55 kW	:	1R X 3C X 150 Sq.mm
55 kW	75 kW	:	1R X 3C X 300 Sq.mm
75 kW	110kW	:	2R X 3C X 150 Sq.mm
110 kW	175kW	:	2R X 3C X 300 Sq.mm

b) For 3.3kV & 11kV, 3-Ph, HT Motors-

Rating			Cable Size
Above	Up to		

175 kW	1000 kW	:	1R X 3C X 240 Sq.mm
1000 kW	2000 kW	:	2R X 3C X 240 Sq.mm
2000 kW	4500 kW	:	2R X 3C X 300 Sq.mm
4501 kW	10,000 kW	:	9R X 1C X 1000 Sq.mm.

Note: During detail engineering if higher cable size is required same shall be provided.

6.10.00 **Rating Plate**

In addition to the minimum information required by IS, the following information shall be shown on motor rating plate :

a) Temperature rise in Deg.C under rated condition and method of measurement.

b) Degree of protection.

c) Bearing identification no. and recommended lubricant.

d) Location of insulated bearings.

7.00.00 **ACCESSORIES**

7.01.00 **General**

Accessories shall be furnished, as listed below, or if otherwise required by driven equipment specification or application.

7.02.00 **Space Heater**

7.02.01 Motor of rating 30 kW and above shall be provided with space heaters, suitably located for easy removal or replacement.

7.02.02 The space heater shall be rated 240 V, 1 Phase, 50Hz and sized to maintain the motor internal temperature above dew point when the motor is idle.

7.02.03 Minimum Cable Size for space heater shall be as listed-

i) For LT motors: 2.5 sq.mm, 2-Core copper cable complying with IS-1554(Part-1).

ii) For HT motors: 6 sq.mm, 2 Core aluminium cable complying with IS-1554(Part-1).

7.03.00 **Temperature Detectors**

7.03.01 All 11000V and 3300V motors shall be provided with twelve (12) nos. simplex type winding temperature detectors, four (4) nos. per phase.

7.03.02 11000V and 3300V motor bearing shall be provided with duplex type temperature detectors.

7.03.03 The temperature detector mentioned above shall be resistance type, 3 wire, platinum wound, 100 Ohms at 0°C.

7.03.04 Leads of all simplex type motor winding RTDS and motor bearing RTDS shall be wired up to respective switchgear metering & protection compartment. From which one set of RTDS will be connected to numerical protection relay and another set shall be kept free for DDCMIS connectivity.

7.03.05 0.5 sq.mm annealed tinned copper conductor complying with IS-1554(Part-1). shall be used for RTD/BTD wiring.

7.04.00 **Indicator/Switch**

7.04.01 Dial type local indicator with alarm contacts shall be provided for the following:

a) 11000 V and 3300V motor bearing temperature.

b) Hot and cold air temperature of the closed air circuit for CACA and CACW motor.

7.04.02 Flow switches shall be provided for monitoring cooling water flow of CACW motor and oil flow of forced lubrication bearing, if used. CACW motor shall be provided with water leakage detector with remote alarm and tripping.

7.04.03 Alarm switch contact rating shall be minimum 2.0 A at 220V D.C. and 10A at 240V A.C.

7.05.00 **Current Transformer for Differential Protection**

7.05.01 Motor 1000 kW and above shall be provided with three differential current transformers mounted over the neutral leads within the enclosure.

7.05.02 The arrangement shall be such as to permit easy access for C.T. testing and replacement. Current transformer characteristics shall match Owner's requirements to be intimated later.

7.06.00 **Accessory Terminal Box**

7.06.01 All accessory equipment such as space heater, temperature detector, current transformers etc., shall be wired to and terminated in terminal boxes, separate from and independent of motor (power) terminal box.

7.06.02 Accessory terminal box shall be complete with double compression brass glands and pressure type terminals to suit owner’s cable connections.

7.07.00 **Drain Plug**

Motor shall have drain plugs so located that they will drain the water, resulting from the condensation or other causes from all pockets of the motor casing.

7.08.00 **Lifting Provisions**

Motor weighing 25 Kg. or more shall be provided with eyebolt or other adequate provision of lifting.

7.09.00 **Dowel Pins**

The motor shall be designed to permit easy access for drilling holes through motor feet or mounting flange for installation of dowel pins after assembling the motor and driven equipment.

7.10.00 **Painting**

For paint shade finish, refer Section-X of Volume: II-A : Lead Specification.

8.00.00 **TESTS**

Routine and Type Tests are to be conducted in presence of customer's representative as per IS:325 and in addition,any special test called for in the driven equipment specification shall be performed and required copies of test certificates are to be furnished for approval. In addition, following tests shall have to be carried out on the motors in presence of OWNER's representative on 3.3kV/11kV motors.

a. Impulse test by 1.2 / 50 micro sec. On sample coil of Stator winding insulation as type test as per IEC-60034, part -15 test voltages as under :

Voltage rating of motor	Impulse Test Voltage
3.3 kV	18 kV peak
11 kV	49 kV peak

b. Tan delta, charging current and dielectric loss measurements on each phase of motor stator winding as routine test.

c. Polarization Index Test as per IS: 7816 as routine test

d. Test for suitability of IPW– 55(Weather proof) as per IS 4691 as type test. Type test certificate for first numeral shall be acceptable in lieu to test, provided the test motor is identical to motor being supplied. Second numeral test shall be carried out on one motor of each type and rating.

e. Fault Withstand Test for main terminal box as type test. Type test certificate shall be acceptable, if the test is conducted on exactly identical terminal box.

f. Test for noise level as routine test.

g. Test for vibration as routine test.

h. Tan delta measurement on coils.

i. Surge withstand test for inter turn insulation.

j. Test to diagnose rotor bar failure during manufacture.

k. Over speed test as routine test.

l. Temperature rise test.

Temperature rise under normal condition above ambient temperature shall be limited to-

Specified Design Ambient temperature	Thermometer Method	Resistance Method
50 deg.C	60 deg.C	70 deg.C
45 deg.C	65 deg.C	75 deg.C
40 deg.C	70 deg.C	80 deg.C

Tests indicated at (h), (i), (j) shall be carried out during manufacture of the coils and shall be furnished for verification.

9.00.00 **DRAWINGS, DATA & MANUALS**

9.01.00 Drawings, Data & Manuals shall be submitted in triplicate with the bid and in quantities and procedures as specified in General Conditions of Contract and/or elsewhere in the specification for approval and subsequent distribution after the issue of 'Letter of Intent'.

9.02.00 **To be Submitted with the bid**

a) List of the motors

b) Individual motor data sheet as per format of the proposal data sheets.

c) Scheme & write-up on forced lubrication system, if any

d) Type test report

9.03.00 **To be submitted for Owner / Purchaser's Approval and Distribution**

All relevant drawings and data pertaining to the equipment like GTP, GA drawing, foundation plan, QAP, etc. shall be submitted by the Bidder for approval of Owner/Owner's consultant. Also refer clause no. 1.19.02(u) of Section-I of Volume – V-A: Technical Specifications for Electrical Equipment & Accessories.

ANNEXURE-A

DESIGN DATA

1.0 AUXILIARY POWER SUPPLY

Supply		Description	Consumer
H.V. Supply		11000 V, 3Ø, 3W, 50 Hz, Non-effectively earthed Fault level 44 kA symm. for 1 sec.	Motors 1500 kW & above
M.V. Supply		3300 V, 3Ø, 3W, 50 Hz, Non-effectively earthed Fault level 40 kA symm. for 1 sec.	Motors 175 kW and Up to less than 1500 kW.
L.V. Supply	(i)	415V, 3Ø, 3W, 50 Hz effectively earthed Fault level 50 kA symm. for 1 sec.	Motors above 0.2kW and below 175kW.
	(ii)	240V AC/415V AC 240V, 1Ø, 2W, 50 Hz effectively earthed	Motors upto 0.2kW. Lighting, Space heating , A.C supply for Control & protective devices.
D.C. Supply		220V, 2W, unearthed Fault level 25* kA. for 1 sec.	D.C. alarm, control & protective devices

* Indicative only, the actual value will be decided by the Bidder, after substantiating the same by calculation.

Note-

- 415V or 3.3 kV may be adopted by the bidder for the drives in the range of 160-210 kW.
- 3.3 kV AC supply for CHP conveyor motors of rating above 160 kW is to be used.
- The voltage rating of the drives indicated above is for basic guideline. Minor variations can be accepted on case to case basis based on techno-economic considerations of the various sub-systems.
- Voltage rating for special purpose motors viz, VFD and screw compressors, shall be as per manufacturer's standard. All the motors ratings on Stacker/ reclaimer shall be 415V ac supply only.

2.0 RANGE OF VARIATION

A.C. Supply :

Voltage	:	± 10%
Frequency	:	+3% to -5%
Combined Volt + frequency	:	10% (absolute sum)

During starting of large motor, the voltage may drop to 80% of the rated voltage for a period of 60 seconds. All electrical equipment while running shall successfully ride over such period without affecting system performance.

D.C. Supply :

Voltage	:	187 to 242 Volt

ANNEXURE – 08

(Inspection & Testing)

6.00.00 **INSPECTION AND TESTING**

6.01.00 The Contractor shall carry out the following specific tests and inspections to ensure that the equipment furnished lies in strict conformance with the specification and also in accordance with applicable codes/standards and good engineering practice.

a) Identification and Testing

i) All materials used for pump construction shall be of tested quality. Material shall be tested as per the relevant standards and test certificates shall be made available to the Owner.

ii) Tests for each pump included under this section shall include but not be limited to the following :

- The entire surface of the impeller castings shall be subjected to Dye Penetration Test as per ASTM Specification no.: E165-65.
- Shaft shall be subjected to Dye Penetration and Ultrasonic Tests.
- Wearing rings shall be subjected to Dye Penetration Test.
- Verification of material, witnessing of pouring, casting and inspection of finalized fabricated/cast castings.
- Inspection of finished castings for impeller and verification of materials.
- Inspection of pump shaft and verification of material.
- Witnessing of NDT/review of NDT reports.
- Static balancing test for impeller and dynamic balancing of complete rotating parts as per ISO- 1940.
- Complete Inspection of assembled pump.

b) Hydrostatic Testing

The pump casing shall be hydrostatically tested at 150% of the shut-off pressure. Pressure shall be maintained for a period of not less than one (1) hour. While arriving at the above values maximum suction pressure shall be taken into account.

c) Performance Test at Shop

i) Each pump shall have to be tested to determine the performance curves of the pumps. These tests are to be conducted in presence of Owner's representative as per the requirements of the Standards of Hydraulic Institute of USA (ASME-Power Test Code PTC 8.2/BS-599) or any other equivalent standard but the tolerances on head discharge and power shall be as specified in HIS, USA.

ii) Performance tests are to be conducted to cover the entire range of operation of the pumps. These shall be carried out to span 130% of rated capacity up to pump shut-off condition. A minimum of five combinations of head and capacity are to be achieved during testing to establish the performance curves, including the design capacity point, shut-off point and the two extremities of the range of operation as specified in the annexures. After completion of performance test, all pumps shall be stripped down for inspection of internals.

iii) Tests shall be conducted with actual drive motors being furnished.

iv) NPSH tests are to be conducted on one pump of each type at 3% head drop conditions, if specified in the pump Annexures.

v) Mechanical run test shall be carried out on all pumps to determine the vibration levels, noise levels etc. This test shall be conducted at site also. However, test value at site shall be used for the acceptance of the equipment.

7.00.00 DRAWINGS, DATA, CURVES AND INFORMATION

7.01.00 The Bidder shall submit the following along with his formal proposal besides the different information plate required as indicated elsewhere in this section.

7.01.01 Drawings

a) General arrangement drawings showing the principal dimensions, weight and location of the suction and discharge connections of the pumps offered. Details of lubrication and sealing arrangement shall be included.

b) Typical cross-section drawing showing various components of the pumps offered materials of construction etc.

7.01.02 Data and Curves

a) Determination of pump total dynamic head and rated capacity as per guidelines specified in Section-I of this Volume. Detailed calculations shall be shown by the Bidder.

b) Anticipated performance curves showing the following characteristics :

i) Capacity vs. head

ii) Capacity vs. power

iii) Capacity vs. efficiency

iv) Capacity vs. NPSH required

v) System resistance curves

c) Speed vs. torque curve of the pump corresponding to recommended mode of pump starting superimposed on speed vs. torque curves of the drive unit corresponding to 80%, 90%, 100% of the rated voltage (applicable only in the cases of pumps with drive motor power rating of 100 KW and above).

d) Completely filled-in Technical particulars enclosed under Volume-IX of this specification.

7.02.00 The successful Bidder shall furnish the following drawings/data for Purchaser/Engineer's approval after award of the contract.

7.02.01 Final versions of all the drawings, documents as specified in clause no. 7.01.00 above.

7.02.02 Pump foundation details along with all design loads, direction and points of application.

7.02.03 Test reports, test certificates and other particulars.

7.02.04 All other applicable drawings and documents as specified in Volume-IIA of this specification.

b) The inspection plan with verification, inspection plan check points, verification sketches, if used and methods used to verify that the inspection and testing points in the inspection plan were performed satisfactorily.

c) Non-destructive examination results /reports including radiography interpretation reports.

d) Factory tests results for testing required as per applicable codes and standards referred in the specification.

e) Welder identification list listing welder's and welding operator's qualification procedure and welding identification symbols.

f) Sketches and drawings used for indicating the method of traceability of the radiographs to the location on the equipment.

g) Stress relief time temperature charts.

h) Inspection reports duly signed by QA personnel of the Owner and Contractor for the agreed inspection hold points. During the course of inspection, the following will also be recorded :

i) When some important repair work is involved to make the job acceptable.

ii) The repair work remains part of the accepted product quality.

i) Letter of conformity certifying that the requirement is in compliance with finalised specification requirements.

4.00.00 **INSPECTION, TESTING AND INSPECTION CERTIFICATES**

4.01.00 The Owner’s Engineer, or his duly authorised representative and/or an outside inspection agency acting on behalf of the Owner shall have access inside the workshops, test labs, establishments at all reasonable times to inspect and examine the materials and workmanship of the works during its manufacture or erection and if part of the works is being manufactured or assembled on other premises or works, the Contractor shall obtain for the Owner’s Engineer and for his duly authorised representative permission to inspect as if the works were manufactured or assembled on the Contractor's own premises or works.

4.02.00 The Contractor shall give the Owner’s Engineer/ Authorized Inspector twenty one (21) days written notice for “CHP” / “W” points of any material being ready for testing by owner’ engineer / Authorized inspector. Such tests shall be to the Contractor's account except for the expenses of the Inspector. The Engineer/ Inspector, unless the witnessing of the tests is virtually waived, will attend such tests within fifteen (15) days of the date on which the equipment is notified as being ready for test/inspection. If owner’s Engineer / Authorised Inspector fail to attend the inspection, next mutually convenient date for test shall be agreed with Contractor. Contractor shall, in

ANNEXURE – 09

(Quality Plan, Guidelines and Format)

VOLUME : IIA

SECTION-VII

QUALITY ASSURANCE REQUIREMENTS

CONTENT

CLAUSE NO.	DESCRIPTION
1.00.00	QUALITY ASSURANCE PROGRAMME
2.00.00	GENERAL REQUIREMENTS QUALITY ASSURANCE
3.00.00	QUALITY ASSURANCE DOCUMENTS
4.00.00	INSPECTION, TESTING & INSPECTION CERTIFICATES

ATTACHMENTS

ANNEXURE-I	FORMAT OF QUALITY ASSURANCE PROGRAMME
ANNEXURE-II	FIELD WELDING SCHEDULE

VOLUME : IIA

SECTION-VII

QUALITY ASSURANCE REQUIREMENTS

1.00.00 QUALITY ASSURANCE PROGRAMME

1.01.00 To ensure that the equipment and services under the scope of Contract whether manufactured or performed within the Contractor's works or at his Sub-contractor's premises or at the Owner's site or at any other place or work are in accordance with the specifications, the Contractor shall adopt suitable quality assurance programme to control such activities at all points, as necessary. Such programmes shall be outlined by the Contractor and shall be finally accepted by the Owner/Authorised representative after discussions before the award of contract. A quality assurance programme of the Contractor shall generally cover the following :

a) His organisation structure for the management and implementation of the proposed quality assurance programme.

b) Documentation control system.

c) Qualification data for Bidder's key personnel.

d) The procedure for purchase of materials, parts, components and selection of Sub-contractor's services including vendor analysis, source inspection, incoming raw-material inspection, verification of materials purchased etc.

e) System for shop manufacturing and site erection control including process controls and fabrication and assembly controls.

f) Control of non-conforming items and system for corrective actions.

g) Inspection and test procedure both for manufacture and all site related works.

h) Control of calibration and testing of measuring and testing equipments.

i) System for quality audit.

j) System for indication and appraisal of inspection status.

k) System for authorising release of manufactured product to the Owner.

l) System for handling storage and delivery.

m) System for maintenance of records.

n) Furnishing of quality plans for manufacturing and field activities detailing out the specific quality control procedure adopted for controlling the quality characteristics relevant to each item of equipment/component as per format enclosed at Annexure-I to this section for Owners approval

o) Internal standards, if referred in the quality plans shall generally be compatible with National / International standards and shall be mentioned in the quality plans. Alternatively bidder shall furnish extracts of the internal standards detailing out acceptance norm for the product / material.

2.00.00 GENERAL REQUIREMENTS - QUALITY ASSURANCE

2.01.00 All materials, components and equipment covered under this specification shall be procured, manufactured, erected, commissioned and tested at all the stages, as per a comprehensive Quality Assurance Programme. An indicative programme of inspection/tests to be carried out by the Contractor for some of the major items is given in the respective technical specification. This is however, not intended to form a comprehensive programme as it is the Contractor's responsibility to draw up and implement such programme duly approved by the Owner/Consultant. The detailed Quality Plans for manufacturing and field activities should be drawn up by the Bidder, separately in the format attached at Annexure-I and will be submitted to Owner/Authorised representative for approval. Schedule of finalisation of such quality plans will be finalised before award.

Contractor shall furnish list of Manufacturing Quality Plans of major equipments indicating proposed inspection catagorisation indicating items that will be offered for Owner’s inspection etc and the Field Quality Plans

2.02.00 Manufacturing Quality Plan for all the major equipment will detail out their respective important components, their in-process various tests/inspection & final inspection / tests, to be carried out as per the requirements of this specification and standards mentioned therein and quality practices and procedures followed by Contractor's Quality Control organization. The relevant reference documents and standards, acceptance norms, inspection documents raised etc., during all stages of materials procurement, manufacture, assembly and final testing/performance testing are to be comprehensibly documented by Contractor.

Manufacturing Quality Plan for all major equipments/ items will be approved by owner. In these approved quality plans, Owner / Authorised representative shall identify customer hold points (CHP), test / checks which shall be carried out in presence of the Owners Engineer or his authorised representative and beyond which the work shall not proceed without consent of Owner / Authorised representative in writing. Inspection/ Test reports are to be submitted to owner as specified in final approved Manufacturing Quality Plans.

2.03.00 Field Quality Plans / Procedures for all field activities shall be submitted to

owner for review / approval. These Quality Plans / procedures will detail out, for all equipment, the quality practices and procedures etc. to be followed by the Contractor's site Quality Control organisation, during various stages of site activities from receipt of materials/ equipment at site.

2.04.00 The Bidder shall also furnish copies of the reference documents/plant standards/acceptance norms/tests and inspection procedure etc., as referred in Quality Plans along with Quality Plans. These Quality plans and reference documents/standards etc. will be subject to Owner's approval without which manufacture shall not proceed. These approved documents shall form a part of the contract. In these approved quality plans, Owner/Authorised representative shall identify customer hold points (CHP), test/checks which shall be carried out in presence of the Owners Engineer or his authorised representative and beyond which the work will not proceed without consent of Owner/Authorised representative in writing. All deviations to this specification, approved quality plans and applicable standards must be documented and major deviations in the form of Non Conformity Report shall be referred to Owner/Authorised representative for approval and dispositioning.

2.05.00 No material shall be despatched from the manufacturer's works before the same is accepted subsequent to pre-despatch final inspection including verification of records of all previous tests/inspections by Owner's Engineer/ Authorised representative for “CHP” and “W” points marked in quality plans , and duly authorised for despatch by issuance of Material Despatch Clearance Certificate (MDCC). For items which is not under owner’s inspection the contractor shall apply for despatch clearance (MDCC) from owner by submitting their internal inspection reports and quality records

2.06.00 All materials used or supplied shall be accompanied by valid and approved materials certificates and tests and inspection report. These certificates and reports shall indicate the sheet serial numbers or other such acceptable identification numbers of the material. The material certified shall also have the identification details stamped on it.

2.07.00 Castings and forgings used for construction shall be of tested quality. Details of results of chemical analysis, heat treatment record, mechanical property test results shall be furnished.

2.08.00 All welding and brazing shall be carried out as per procedure drawn and qualified in accordance with requirements of ASME Section - IX (latest edition) or other International equivalent standard acceptable to the Owner.

All brazers, welders etc. employed on any part of the contract at Contractor's/ Sub-Contractor's works or at site shall be qualified as per ASME Section-IX (latest edition) or equivalent international standard approved by the Owner. Such qualification tests shall be conducted in presence of Owner / his authorised representative or owner approved Third Party Inspection Agency(TPIA). Previously qualified WPS & PQR shall be acceptable if witnessed by owner’s approved TPIA.

For welding of pressure parts and high pressure piping coming under IBR purview, the requirements of IBR shall also be complied with.

2.09.00 All non-destructive examination (NDT) shall be carried out in accordance with LIST OF STANDARDS FOR REFERENCE as given below in this section.

The NDT operator shall be qualified as per SNT-TC-IA (of American Society of non- destructive examination). Results of NDT for the list major equipments / items identified for owner's inspection shall be properly recorded and submitted for review and approval. Other items not covered under owner's inspection, contractor shall review and approve the NDT results and such reports shall be submitted to owner in the final documentation of the items / equipments

2.10.00 All the sub-vendors proposed by the Contractor for procurement of major bought out items including castings, forgings, semi-finished and finished components/equipment list of which shall be drawn up by the Contractor and finalised with the Owner shall be subject to Owner's approval. Quality Plans of the successful vendors shall be discussed, finalised and approved by the Owner/Authorised representative and form part of the Purchase Order between the Contractor and the Vendor.

2.11.00 All the purchase specifications for the major bought-out items, list of which shall be drawn up by the Contractor and finalised with the Owner shall be furnished to the Owner for comments and subsequent approval before orders are placed.

Owner reserves the right to carry out quality audit and quality surveillance of the systems and procedures of the Contractor's or their sub-vendor's quality management and control activities. The Contractor shall provide all necessary assistance to enable the Owner carry out such audit and surveillance.

Quality audit/approval of the results of tests and inspection will not prejudice the right of the Owner to reject equipment not giving the desired performance after erection and shall not in no way limit the liabilities and responsibilities of the Contractor in earning satisfactory performance of equipment as per specification.

2.12.00 Quality requirements for main equipment shall equally apply for spares and replacement items.

2.13.00 Repair/rectification procedures to be adopted to make any job acceptable shall be subject to the approval of the Owner.

2.14.00 For quality assurance of all civil works refer to the specifications for civil works.

3.00.00 **QUALITY ASSURANCE DOCUMENTS**

3.01.00 The Contractor shall be required to submit two (2) copies and two (2) sets of microfilms / CDs of the following Quality Assurance documents within three (3) weeks after despatch of the equipment:

a) Material mill test reports on components as specified by the specification.

b) The inspection plan with verification, inspection plan check points, verification sketches, if used and methods used to verify that the inspection and testing points in the inspection plan were performed satisfactorily.

c) Non-destructive examination results /reports including radiography interpretation reports.

d) Factory tests results for testing required as per applicable codes and standards referred in the specification.

e) Welder identification list listing welder's and welding operator's qualification procedure and welding identification symbols.

f) Sketches and drawings used for indicating the method of traceability of the radiographs to the location on the equipment.

g) Stress relief time temperature charts.

h) Inspection reports duly signed by QA personnel of the Owner and Contractor for the agreed inspection hold points. During the course of inspection, the following will also be recorded :

i) When some important repair work is involved to make the job acceptable.

ii) The repair work remains part of the accepted product quality.

i) Letter of conformity certifying that the requirement is in compliance with finalised specification requirements.

4.00.00 **INSPECTION, TESTING AND INSPECTION CERTIFICATES**

4.01.00 The Owner’s Engineer, or his duly authorised representative and/or an outside inspection agency acting on behalf of the Owner shall have access inside the workshops, test labs, establishments at all reasonable times to inspect and examine the materials and workmanship of the works during its manufacture or erection and if part of the works is being manufactured or assembled on other premises or works, the Contractor shall obtain for the Owner’s Engineer and for his duly authorised representative permission to inspect as if the works were manufactured or assembled on the Contractor's own premises or works.

4.02.00 The Contractor shall give the Owner’s Engineer/ Authorized Inspector twenty one (21) days written notice for “CHP” / “W” points of any material being ready for testing by owner’ engineer / Authorized inspector. Such tests shall be to the Contractor's account except for the expenses of the Inspector. The Engineer/ Inspector, unless the witnessing of the tests is virtually waived, will attend such tests within fifteen (15) days of the date on which the equipment is notified as being ready for test/inspection. If owner’s Engineer / Authorised Inspector fail to attend the inspection, next mutually convenient date for test shall be agreed with Contractor. Contractor shall, in

no case proceed with the test without owner or his authorized inspectors, unless the witnessing is officially waived and advised Contactor to proceed with the test. Contractor shall forthwith forward duly certified completed test report and a product quality certificate in six (6) copies to owner upon completion of such test.

4.03.00 The Engineer or Inspector shall within fifteen (15) days from the date of Inspection as defined herein give notice in writing to the Contractor, or any objection to any drawings and all or any equipment and workmanship which is in his opinion not in accordance with the contract / QAP or other approved quality documents. The Contractor shall give due consideration to such objections and shall either make modifications that may be necessary to meet the said objections or shall confirm in writing to the Engineer/Inspector giving reasons therein, that no modifications are necessary to comply with the contract / QAP or other approved quality documents.

4.04.00 When the factory tests have been completed at the Contractor's or sub-contractor's works, the Engineer/Inspector shall issue a certificate to this effect fifteen (15) days after completion of tests excluding the test completion date subject to submission of all certified documents related to the test, If the tests are not witnessed by the Engineer/Inspectors, the certificate shall be issued within fifteen (15) days of the receipt of the Contractor's test certificate by the Engineer/Inspector. Failure of the owner’s Engineer/Inspector to issue such a certificate shall not prevent the Contractor from proceeding with the works. The completion of these tests, or the issue of the certificates shall not bind the Owner to accept the equipment should it, on further tests after erection be found not to comply with the contract / QAP or other approved quality documents.

4.05.00 In all cases where the contract provides for tests whether at the premises or works of the Contractor or any sub-contractor, the Contractor, except where otherwise specified shall provide free of charge such items as labour, materials, electricity, fuel, water, stores, apparatus and instruments as may be reasonably demanded by the owner’s Engineer/Inspector or his authorised representatives to carry out effectively such tests on the equipment in accordance with the Contract / QAP or other approved quality documents. Contractor and shall give facilities to the owner’s Engineer/ Inspector or to his authorised representative to accomplish testing.

4.06.00 To facilitate advance planning of inspection in addition to giving inspection notice as per Clause 4.02.00, the Contractor shall furnish quarterly inspection programme indicating proposed schedule dates of inspection at customer hold point and final inspection stages. Updated quarterly inspection plans will be made for each three consecutive months and shall be furnished before beginning of each calendar month.

LIST OF STANDARDS FOR REFERENCE

a) International Standards Organisation (ISO).

b) International Electro-technical Commission (IEC).

c) American Society of Mechanical Engineers(ASME)

d) American National Standards Institute (ANSI).

e) American Society for Testing and Materials (ASTM).

f) American Institute of Steel Construction (AISC).

g) American Welding Society (AWS).

h) Architecture Institute of Japan (AIJ).

i) National Fire Protection Association (NFPA).

j) National Electrical Manufacturer's Association (NEMA).

k) Japanese Electro-technical Committee (JEC).

l) Institute of Electrical and Electronics Engineers (IEEE).

m) Federal Occupational Safety and Health Regulations (OSHA).

n) Instrument Society of America (ISA).

o) National Electric Code (NEC).

p) Heat Exchanger Institute (HEI).

q) Tubular Exchanger Manufacturer's Association (TEMA).

r) Hydraulic Institute (HIS).

s) International Electro-Technical Commission Publications.

t) Power Test Code for Steam Turbines (PTC).

u) Applicable German Standards (DIN).

v) Applicable British Standards (BS).

w) Applicable Japanese Standards (JIS).

x) Electric Power Research Institute (EPRI).

y) Standards of Manufacturer's Standardization Society (MSS)

z) Bureau of Indian Standards Institution (BIS).

aa) Indian Electricity Rules.

bb) Indian Boiler Regulations (IBR).

cc) Indian Explosives Act.

dd) Indian Factories Act.

ee) Tariff Advisory Committee (TAC) rules.

ff) Emission regulation of Central Pollution Control Board (CPCB).

gg) Pollution Control regulations of Dept. of Environment, Govt. of India

hh) Central Board of Irrigation and Power (CBIP) Publications

ANNEXURE-I
FORMAT OF QUALITY ASSURANCE PROGRAMME

VENDOR'S LOGO , NAME & ADDRESS	MANUFACTURING QUALITY ASSURANCE PLAN	DOC NO:	XXXXX-CAL-QAP-M-0001				
	-	REV NO :	0	1	2	3	4
	ITEM :	DATE :					

CLIENT :		LOCATION :	
PROJECT :		REFERENCE PURCHASE ORDER NO. & DT :	
VENDOR :		REFERENCE APPROVED DATA SHEET :	
SUB VENDOR :		REFERENCE APPROVED DRAWING. NO. :	

ABBREVIATIONS :

QAP - QUALITY ASSURANCE PLAN,
CR - CRITICAL,
MA - MAJOR,
MI - MINOR
SPEC - SPECIFICATION,
TC - TEST CERTIFICATES
P - PERFORM
w - WITNESS
V - VERIFY
CHP - CUSTOMER HOLD POINT

MATL - MATERIAL,
APP - APPROVED,
DWG - DRAWING,
SUPL - SUPPLIER,
PROC - PROCEDURE

AGENCY :

1 - DCPL/PROJECT AUTHORITY
2 - SUPPLIER
3 - SUB-SUPPLIER
4 - MANUFACTURER
5 - THIRD PARTY INSPECTION AGENCY

GENERAL REMARKS

1 THE ITEMS WHICH ARE FALLING UNDER ANY STATUTORY AUTHORITY'S (LIKE I.B.R. ETC.) SCOPE SHALL BE SUBJECTED TO THAT STATUTORY AUTHORITY'S INSPECTION CLEARENCE.

NOTES:

1. EXACT MATERIAL / PROCESS / INSPECTION / TESTS FOLLOWED BY THE MANUFACTURER SHALL BE SPECIFIED
2. EXACT REFERENCE DOCUMENT/ACCEPTANCE STANDARD SHALL BE SPECIFIED
3. IN CASE SPECIFIED ACCEPTANCE STANDARD / NORMS IS OTHER THAN NATIONAL / INTERNATIONAL STANDARDS

. STANDARD / COPY OF THE ACCEPTANCE NORMS FOLLOWED BY THE MANUFACTURER SHALL BE SUBMITTED FOR REVIEW RECORD

4 FINAL INSPECTION DOSSIER SHALL BE PREPARED BY MANUFACTURER & SHALL BE ENDORSED BY INSPECTIONTION AGENCY

	Prepared by			Checked by			Approved By		
Revision	R0	R1	R2	R0	R1	R2	R0	R1	R2
DATE									

VENDOR'S LOGO, NAME & ADDRESS	ITEM :	DOC NO:			
		REV NO :	R0	R1	R2
		DATE :			

SL NO.	DESCRIPTION	CHECKS			CATEGORY	REF DOCS	ACCEPTANCE NORM	FORMAT OF RECORD	AGENCY			REMARKS
		TYPE	METHOD	QUANTUM					P	W	V	
1	2	3	4	5	6	7	8	9	12	13	14	15
1.00												

Notes:

Prepared by				Checked by			Approved By		
Revision	R0	R1	R2	R0	R1	R2	R0	R1	R2
DATE									

COPYRIGHT AND CONFIDENTIAL
The information on this document is the property of BHARAT HEAVY ELECTRICALS LIMITED,
It must not be used directly or indirectly in any way detrimental to the interest of the company.

QAP GUIDELINES & FORMAT

`

(ANNEXURE 6 to PEMC 06377)

The QAP format and guidelines for filling up the format shall be used by vendor for preparation and submission of QAP after order placement.

Note :

1. Typical /Indicative /Standard QAP(s) for equipment /package attached is reference document and to use by successful bidder in future for preparation and submission of QAP for BHEL /CUSTOMER approval.

2. No deviation to reference document is acceptable.

COPYRIGHT AND CONFIDENTIAL
The information on this document is the property of BHARAT HEAVY ELECTRICALS LIMITED .
It must not be used directly or indirectly in any way detrimental to the interest of the company.

GUIDELINES TO VENDORS FOR PREPARATION OF QUALITY ASSURANCE PLAN

1. QAP shall be made in landscape mode on A4 size paper as per the format enclosed. Font size shall be minimum 10.

2. Each page of QAP shall contain the following information.
   a) Vendor˘s name & address.
   b) Customer: BHEL, Hyderabad.
   c) Project.
   d) BHEL Product Standard Number/revision number as referred in P.O.
   e) BHEL Purchase Order Number & Date.
   f) Product as per P.O. description.
   g) QAP Number (unique and shall not repeat)/revision number/date.
   h) Page number and number of pages

3. QAP shall contain four parts / stages as follows.
   a) Raw materials and bought out items.
   b) In process Control / Inspection.
   c) Final assembly, Inspection & Testing.
   d) Painting, preservation & packing.

4. Under ˙Component˘, indicate name of the component (say casing, rotor, pressure gauge, etc).

5. Under ˙Characteristics˘, indicate appropriately (say chemical analysis, mechanical properties, NDT (UT,DP etc.), hydrostatic test, calibration check etc.)

6. Under ˙Class˘, indicate minor, major or critical depending on the importance of characteristic.

7. Under ˙Type of check˘, indicate appropriately (say chemical, mechanical, UT, DP etc.)

8. Under ˙Quantum of check˘, indicate appropriately (say 100%, 10%, sample, per melt, per heat, all pieces etc.)

9. Under ˙Reference document˘ and ˙Acceptance norms˘, appropriate National & International standards, BHEL standards, approved drawing references etc. should be indicated. It is not correct to mention as `Vendor˘s internal standards or Vendor˘s standard practice etc._. If vendors˘ internal standards are referred, same shall be in line with BHEL Spec. indicated in the P.O. These may require review & approval by our Engineering dept.

10. Under ˙Format of record˘, indicate appropriately supplier˘s test certificate, calibration certificate, lab report, inspection report etc.

11. Please refer ˙Agency˘ in QAP format.
    Under P: Perform, W: Witness, V: Verify
    Indicate against each characteristic 1: (BHEL CQS/Nominated inspection agency), OR
    2: (Vendor / Sub vendor)
    Note: Performing agency is normally vendor or his sub vendor (Legend 2). Where

COPYRIGHT AND CONFIDENTIAL
The information on this document is the property of BHARAT HEAVY ELECTRICALS LIMITED .
It must not be used directly or indirectly in any way detrimental to the interest of the company.

witness points are indicated in specification, P.O., Drawing etc., for such operations, under Witness (W) column use 1. Under 'Verify' column, use code1.

12. Under ːDˇ please put (Ŧ Tick) against each characteristic where vendor proposes to submit test certificate/report etc. OR as required as per BHEL Specification.

13. Vendorˇs signature & stamp should be available on each page of QAP.

14. Vendor should read the BHEL Product Standard thoroughly and QAP should be made only inline and relevant to the Specification & Approved Drawings.

15.The following operations/characteristics/check points may be included (AS APPROPRIATE)

a) Visual check
b) Dimensional check
c) Mechanical and Chemical properties.
d) Surface preparation before painting (by chemical cleaning, sand blasting, shot blasting etc. as the case may be.)
e) Painting check for shade, Dry Film Thickness (DFT), Adhesion/ peel off test etc.
f) Check for correctness for all components mounted as per General arrangement Drawing, Bill Of Materials (BOM), etc. for range, rating, make, color, size, location as per GA, quantity, label description including tag nos., annunciator facia, loose components, accessories, spares etc.
g) Verification of test certificate for protection class for the enclosures.
h) Mechanical functioning of switches.
i) Continuity of earthing and provision of earth points.
j) Colour coding of wiring, size, tightness & dressing of wiring.
k) Review of test certificates of assembled items, raw materials, internal test reports etc.
l) Witness of functional checks, which may include mechanical run & electrical run, H.V.test, IR measurement, Electrical and Mechanical tests etc.
m) PQR, WPS, Welder Qualification Record, welding records (fit up, DP) etc.
n) Material identification (for punch marks of serial numbers, Heat No, Melt No, Inspector's stamp etc.)
o) Hydraulic Pressure Test, Pneumatic Pressure Test, Liquid Penetration Examination and other Non Destructive Tests.
p) Tests on Galvanised items (Visual, Hammer Test, Knife Test, Thickness, Pierce Test (Copper sulphate test), Hydrogen evaluation test, Stripping test (for Mass of Zinc coating)
q) All tests as per BHEL Product Standard & approved drawings including Type tests and Routine tests on individual items and on System as a whole.
r) Packing and Preservation.

16. **QAP Format shall be as per customer.**

17. Typical Manufacturing QAP for Pump, Motor & Diesel Engine are attached. Vendor shall submit these QAPs after PO placement for BHEL Approval. Same will be reviewed by BHEL in line with BHEL/Customer/Consultant specifications.

Typical Quality Plan for Vertical Pump

SL NO	COMPONENT & OPERATIONS	CHARACTERISTICS	CLASS	TYPE OF CHECK	QUANTUM OF CHECK		REFERENCE DOCUMENT	ACCEPTANCE NORM	FORMAT OF RECORD		AGENCY			REMARKS
					2 (vendr)	1 (client)					P	W	V	
1	2	3	4	5	6		7	8	9	D*	** 10			11
1.0	***RAW MATERIAL INSPECTION***													
1.1	Bowl, Bell Mouth, Impeller/ Wear ring (if applicable)	Chemical Properties	Critical	Chemical Analysis	1 sample/ heat	--	Relevant Material Specificationn as per Apprd.Data Sheet / Appd..Drg.		MTC	√	2	-	1	Refer Note - 1, 2
		Mechanical Properties	Critical	Mechanical Tests	1 sample/ heat	--	--Do--		MTC	√	2	-	1	--Do--
		Visual	Major	Visual	100%	--	MSS-SP-55			--	2	-	--	
1.2	Bar stock for Shafts, couplings and Shaft Sleeves	Chemical Properties	Critical	Chemical Analysis	1 sample/ heat	--	Relevant Material Specificationn as per Apprd.Data Sheet / Appd..Drg.		MTC	√	2	-	1	Refer Note- 3
		Mechanical Properties	Critical	Mechanical Tests	1 sample/ heat	--	--Do--		MTC	√	2	-	1	--Do--
1.3	Shaft	Internal defects	Major	UT*	100%	--			UT Report	√	2	-	1	* For Shaft Dia. > 40 mm
1.4	Plate material for Column pipe Taper Col. Pipe & Discharge Head	Chemical & Mech. Properties	Critical	Chemical & Mech. Check	1 Sample	One per	Approved Datasheet/Drawi	As per Datasheet	MTC	*	2	-	1	In case, co-related TCs are not available, quantum of check
		Internal defects	Major	UT*	100%	--	ASME Sec. V SA 578 level A	ASME Sec. V SA 578 level A	NDT Report	*	2	-	1	* For Plate Thk.. > 20 mm
1.5	Thrust Bearing Housing & Thrust Pad**	Chemical & Mech. Properties	Major	Chemical & Mech. Check	1 sample/ heat	--	Relevant Material Specificationn as per Apprd..Drg.		MTC	√	2	-	1	** Not applicable for Antifriction Bearings
1.6	*STRAINER*	*Check of Material Grade*	*Major*	*Check of Material Grade*	1 Sample per Batch	--	*Approved Datasheet/Drawing*		*Compliance Cerificate*	√	2	-	1	

SL NO	COMPONENT & OPERATIONS	CHARACTERISTICS	CLASS	TYPE OF CHECK	QUANTUM OF CHECK		REFERENCE DOCUMENT	ACCEPTANCE NORM	FORMAT OF RECORD		AGENCY			REMARKS
					2 (vendr)	1 (client)					P	W	V	
1	2	3	4	5	6		7	8	9	D*	** 10			11
2	**IN PROCESS INSPECTION**													
2.1	WPS/PQR/WPQ for pressure retaining fabricated items	Welding Procedure & Welder qualification	Major	Qualification records	--	--	ASME sec. IX	ASME sec. IX	Test reports	*	2	-	1	Documents to be submitted for review
2.2	Fabricated Items	Stress Relieving of Butt Joiunts >35mm thk	Major	Verification of HT Chart	100%	--	see remarks	see remarks	HT Register	*	2	-	1	Heat to 620°C @150°C/Hr soak for 2hrs upto 2" thk furnace cool to 300°C and then cool in still air
		RT of full penetration Butt joints***	Major	Radiography	See remark	--	ASME Sec. V	ASME sec. VIII Div. 1, UW 51/52		*	2	-	1	*** Spot RT covering 10% of Butt weld length for Thk. 10-20 mm & 100% for thk. More than 20 mm
2.3	DP check on welds	DPT on machined surfaces	Major	NDT	100%	--			DPT Report	√	2	-	1	
2.4	Parts listed in 1.1 to 1.3 after machining	Cleaning, Deburring, Surface Defect & Finish	Major	Visual	100%	--	Manufacturing Drawing			--	2	--	--	
		Dimensions	Major	Measurement	100%	--	--Do--		IR	--	2	--	--	
		DPT on machined surfaces	Major	NDT	100%	--			DPT Report	√	2	-	1	
2.5	Bowl, Column Pipe & Discharge Head	Hydrotest	Major	Leak Tightness	100%	--	Approved Data sheet/HI 2.6	No Leakage	Hydrotest Certificate	√	2	-	1	Test Pressure = 1.5 X Shut off Head & Test Dur.= 30 min.
2.6	Impeller, Pump & Motor	Balancing	Major	Balancing	100%	--	ISO 1940 Gr. 6.3		IR	√	2	-	1	
3.0	***FINAL INSPECTION & TESTING***													
3.1	*Performance Test With one of the JOB Motor*	Q Vs H, Q Vs η,Q Vs P, Noise & Vibration Level	Critical	Performance Test	100%	1 per Type	Appd. Data sheet / Test Procedure. 2.6		Test Report	√	2	1	1	CHP, Refer note no. 6,7 & 8

SL NO	COMPONENT & OPERATIONS	CHARACTERISTICS	CLASS	TYPE OF CHECK	QUANTUM OF CHECK		REFERENCE DOCUMENT	ACCEPTANCE NORM	FORMAT OF RECORD		AGENCY			REMARKS
					2 (vendr)	1 (client)					P	W	V	
1	2	3	4	5	6		7	8	9	D*	** 10			11
3.2	Strip Test - In case of abnormal noise during Perf. Test	Check for wear & rubbing	Major	Visual	100%	100%	No undue wear & rubbing		Inspection Report	√	2	1	1	CHP, Refer note no. 9
3.4	Complete Pump	Overall dim. Check	Major	Visual	1/type/model		Approved GA Drg.		Dim. Report	√	2	-	1	
		QA Documentation	Major	Verification	100%	100%	Approved Data sheet/Quality Plan		Dim. Report	√	2	-	1	CHP
4	***PRESERVATION & PACKING***													
4.1	PRESERVATION & PACKING	Painting, *Completeness of PUMP* , Packing & Despatch	Major	Visual	100%	--	Technical spec./ Approved Datasheet		Packing Slip	–	2	–	-	

REMARKS

1 NO WELD REPAIRS PERMISSIBLE ON CI CASTING

2 AS CAST/PUNCHED HEAT NOS. SHALL BE PROVIDED FOR CORELATION

3 IN CASE OF CO RELATED TC'S ARE NOT AVAILABLE THEN QUANTUM OF CHECK WILL BE ONE SAMPLE FROM EACH BAR.

4 THIS QAP IS ALSO APPLICABLE FOR SPARES

5 MATERIAL SHALL BE AS PER APPROVED CS DRG./ DATA SHEET

6 VIBRATION & NOISE LEVEL FOR RECORD PURPOSE ONLY. HOWEVER THEIR VALUES AS PER SPECIFICATIONS ARE GUARANTEED AT SITE.

7 TOLERANCE ON SHUT OFF HEAD IS AS PER TABLE 14 OF API 610

8 THE PERFORMANCE TEST WILL BE CARRIED OUT WITH REDUCED SUSPENSION LENGTH DUE TO CONSTRAINTS OF SUMP DEPTH

9 STRIP TEST - INCASE OF ABNORMAL NOISE OBSERVED DURING PERF. TEST PUMP WILL BE STRIPPED DOWN FOR VISUAL INSPECTION OF IMPELLER & WEAR SHALL BE OFFERED FOR VISUAL INSPECTION FOR WEAR / RUBBING MARKS

*LEGEND : * RECORDS, INDENTIFIED WITH "TICK" (√) SHALL BE ESSENTIALLY INCLUDED BY SUPPLIER IN QA DOCUMENTATION. : 1Customer, 2:Vendor / Sub Vendor; P: Perform, W:Witness and V: Verification of Reports*

VENDOR'S NAME & ADDRESS:	**MANUFACTURING QUALITY PLAN**		QP. NO.:	
	CUSTOMER: BHEL, HYDERABAD – 32. PROJECT: PRODUCT: LT MOTOR	BHEL P.O.NO.: P.O.DATE: BHEL SPEC: REV:	REV NO:	DATE:
			PAGE 1 OF 9	

SL NO	COMPONENTS	CHARACTERISTICS	CLASS	TYPE OF CHECK	QUANTUM OF CHECK	REFERENCE DOCUMENT	ACCEPTANCE NORMS	FORMAT OF RECORD	* D	AGENCY P	AGENCY W	AGENCY V	REMARKS
1.0	**RAW MATERIALS & BOUGHT OUT ITEMS**												
1.1	COPPER CONDUCTOR	a. PHYSICAL PROPERTIES (Elongation, Springiness, Abrasion Test, Mandrel Winding Test etc)	Major	Mechanical	1 sample/lot	Tech Spec/ Approved Datasheet/ Approved Drawing	Tech Spec/ Approved Datasheet/ Approved Drawing	Manufacturer's Test Certificate	✓	2	--	1	
		b. ELECTRICAL PROPERTIES (BDV Test, Electrical Resistance, Continuity Test, Heat Shock Test etc)	Major	Electrical	1 sample/lot			Manufacturer's Test Certificate	✓	2	--	1	
		c. DIMENSIONAL CHECK (Bare conductor dia., Overall dia. etc)	Major	Visual	1 sample/lot			Manufacturer's Test Certificate	✓	2	--	1	
1.2	SLOT INSULATION	a. MECHANICAL PROPERTIES (Thickness, Tensile Strength, Elongation etc)	Major	Mechanical	1 sample/lot			Manufacturer's Test Certificate	✓	2	--	1	
		b. ELECTRICAL PROPERTIES (BDV Test etc)	Major	Electrical	1 sample/lot			Manufacturer's Test Certificate	✓	2	--	1	

LEGEND: P: PERFORM, W: WITNESS, V: VERIFICATION. INDICATE **1** FOR BHEL / BHEL NOMINATED INSPECTION AGENCY) & **2** FOR VENDOR/SUB VENDOR AS APPROPRIATE AGAINST EACH COMPONENT /CHARACTERISTIC UNDER P, W & V COLUMNS. * FOR ITEMS MARKED ✓ (TICK) IN COLUMN 'D', TEST CERTIFICATES SHALL BE SUBMITTED TO BHEL FOR RECORDS.	PREPARED BY VENDOR'S SIGNATURE & STAMP	APPROVED BY BHEL QA SIGNATURE & STAMP	APPROVED BY CUSTOMER'S SIGNATURE & STAMP

VENDOR'S NAME & ADDRESS:	**MANUFACTURING QUALITY PLAN**	QP. NO.:	
	CUSTOMER: BHEL, HYDERABAD – 32. PROJECT: PRODUCT: LT MOTOR	BHEL P.O.NO.: P.O.DATE: BHEL SPEC: REV:	REV NO: DATE: PAGE 2 OF 9

SL NO	COMPONENTS	CHARACTERISTICS	CLASS	TYPE OF CHECK	QUANTUM OF CHECK	REFERENCE DOCUMENT	ACCEPTANCE NORMS	FORMAT OF RECORD	* D	AGENCY P	AGENCY W	AGENCY V	REMARKS
		c. DIMENSIONAL CHECK (Thickness etc)	Major	Visual	1 sample/lot	Tech Spec/ Approved Datasheet/ Approved Drawing	Tech Spec/ Approved Datasheet/ Approved Drawing	Manufacturer's Test Certificate	✓	2	--	1	
1.3	INSULATING SLEEVINGS	a. DIMENSIONAL CHECK (Bore diameter, Wall Thickness etc)	Major	Visual	1 sample/lot			Manufacturer's Test Certificate	✓	2	--	1	
		b. ELECTRICAL PROPERTIES (BDV Test, Insulation, Resistance etc)	Major	Electrical	1 sample/lot			Manufacturer's Test Certificate	✓	2	--	1	
1.4	VARNISH & RESIN	a. DENSITY	Major	Physical	1 sample/lot			Manufacturer's Test Certificate	✓	2	--	1	
		b. VISCOSITY	Major	Physical	1 sample/lot			Manufacturer's Test Certificate	✓	2	--	1	
		c. DRYING TIME	Major	Thermal	1 sample/lot			Manufacturer's Test Certificate	✓	2	--	1	
		d. SHELF LIFE	Major	Visual	1 sample/lot			Manufacturer's Test Certificate	✓	2	--	1	
1.5	SHAFT	a. DIMENSIONAL CHECK (Outer Diameter etc.)	Major	Visual	1 sample/lot			Manufacturer's Test Certificate	✓	2	--	1	

LEGEND: P: PERFORM, W: WITNESS, V: VERIFICATION. INDICATE **1** FOR BHEL / BHEL NOMINATED INSPECTION AGENCY) & **2** FOR VENDOR/SUB VENDOR AS APPROPRIATE AGAINST EACH COMPONENT /CHARACTERISTIC UNDER P, W & V COLUMNS. * FOR ITEMS MARKED ✓ (TICK) IN COLUMN 'D', TEST CERTIFICATES SHALL BE SUBMITTED TO BHEL FOR RECORDS.	PREPARED BY VENDOR'S SIGNATURE & STAMP	APPROVED BY BHEL QA SIGNATURE & STAMP	APPROVED BY CUSTOMER'S SIGNATURE & STAMP

VENDOR'S NAME & ADDRESS:	**MANUFACTURING QUALITY PLAN**	QP. NO.:	
	CUSTOMER: BHEL, HYDERABAD – 32. PROJECT: PRODUCT: LT MOTOR	BHEL P.O.NO.: P.O.DATE: BHEL SPEC: REV:	REV NO: DATE: PAGE 3 OF 9

SL NO	COMPONENTS	CHARACTERISTICS	CLASS	TYPE OF CHECK	QUANTUM OF CHECK	REFERENCE DOCUMENT	ACCEPTANCE NORMS	FORMAT OF RECORD	* D	AGENCY P	AGENCY W	AGENCY V	REMARKS
		b. CHEMICAL PROPERTIES	Major	Chemical	1 sample/lot	Tech Spec/ Approved Datasheet/ Approved Drawing	Tech Spec/ Approved Datasheet/ Approved Drawing	Manufacturer's Test Certificate	✓	2	--	1	
		c. MECHANICAL PROPERTIES (Hardness, Tensile Strength, Elongation etc)	Major	Mechanical	1 sample/lot			Manufacturer's Test Certificate	✓	2	--	1	
		d. ULTRASONIC TEST*	Major	NDT	1 sample/lot			Manufacturer's Test Certificate	✓	2	--	1	*As applicable
1.6	STAMPING STEEL	a. PHYSICAL PROPERTIES (Bending Test, Stacking Factor etc)	Major	Mechanical	1 sample/lot			Manufacturer's Test Certificate	✓	2	--	1	
		b. ELECTRICAL PROPERTIES (Permeability, Specific Core Loss, Insulation Resistance etc)	Major	Electrical	1 sample/lot			Manufacturer's Test Certificate	✓	2	--	1	
		c. DIMENSION (Thickness, etc.)	Major	Measurement	1 sample/lot			Manufacturer's Test Certificate	✓	2	--	1	
		d. THICKNESS OF COATING	Major	Measurement	1 sample/lot			Manufacturer's Test Certificate	✓	2	--	1	

LEGEND: P: PERFORM, W: WITNESS, V: VERIFICATION. INDICATE **1** FOR BHEL / BHEL NOMINATED INSPECTION AGENCY) & **2** FOR VENDOR/SUB VENDOR AS APPROPRIATE AGAINST EACH COMPONENT /CHARACTERISTIC UNDER P, W & V COLUMNS. * FOR ITEMS MARKED ✓ (TICK) IN COLUMN 'D', TEST CERTIFICATES SHALL BE SUBMITTED TO BHEL FOR RECORDS.	PREPARED BY VENDOR'S SIGNATURE & STAMP	APPROVED BY BHEL QA SIGNATURE & STAMP	APPROVED BY CUSTOMER'S SIGNATURE & STAMP

VENDOR'S NAME & ADDRESS:	**MANUFACTURING QUALITY PLAN**	QP. NO.:	
	CUSTOMER: BHEL, HYDERABAD – 32. PROJECT: PRODUCT: LT MOTOR	BHEL P.O.NO.: P.O.DATE: BHEL SPEC: REV:	REV NO: DATE: PAGE 4 OF 9

SL NO	COMPONENTS	CHARACTERISTICS	CLASS	TYPE OF CHECK	QUANTUM OF CHECK	REFERENCE DOCUMENT	ACCEPTANCE NORMS	FORMAT OF RECORD	* D	AGENCY P	AGENCY W	AGENCY V	REMARKS
1.7	DIE CAST ROTOR	a. CHEMICAL COMPOSITION (for Aluminium Ingot, etc)	Major	Chemical	1 sample/lot	Tech Spec/ Approved Datasheet/ Approved Drawing	Tech Spec/ Approved Datasheet/ Approved Drawing	Manufacturer's Test Certificate	✓	2	--	1	
		b. DIMENSIONAL CONFORMITY (Core length, Diameter etc.)	Major	Mechanical	100%			Inspection Record	✓	2	--	1	
		c. SURFACE FINISH (Free from blow holes, cracks etc)	Major	Visual	100%			Inspection Record	✓	2	--	1	
1.8	CASTINGS – BODY, END SHIELDS etc.	a. MECHANICAL PROPERTIES (Hardness, Tensile Strength etc)	Major	Mechanical	1 sample/lot			Manufacturer's Test Certificate	✓	2	--	1	
		b. SURFACE FINISH	Major	Visual	1 sample/lot			Manufacturer's Test Certificate	✓	2	--	1	
		c. DIMENSION	Major	Visual	1 sample/lot			Manufacturer's Test Certificate	✓	2	--	1	
1.9	BEARINGS	a. TYPE & MAKE	Major	Verification	1 sample/lot			Manufacturer's Test Certificate	✓	2	--	1	
1.10	PAINTS	a. TYPE OF PAINT	Major	Review	1 sample/lot			Manufacturer's Test Certificate	✓	2	--	1	

LEGEND: P: PERFORM, W: WITNESS, V: VERIFICATION. INDICATE **1** FOR BHEL / BHEL NOMINATED INSPECTION AGENCY) & **2** FOR VENDOR/SUB VENDOR AS APPROPRIATE AGAINST EACH COMPONENT /CHARACTERISTIC UNDER P, W & V COLUMNS. * FOR ITEMS MARKED ✓ (TICK) IN COLUMN 'D', TEST CERTIFICATES SHALL BE SUBMITTED TO BHEL FOR RECORDS.	PREPARED BY VENDOR'S SIGNATURE & STAMP	APPROVED BY BHEL QA SIGNATURE & STAMP	APPROVED BY CUSTOMER'S SIGNATURE & STAMP

VENDOR'S NAME & ADDRESS:	**MANUFACTURING QUALITY PLAN**	QP. NO.:	
	CUSTOMER: BHEL, HYDERABAD – 32. PROJECT: PRODUCT: LT MOTOR	BHEL P.O.NO.: P.O.DATE: BHEL SPEC: REV:	REV NO: DATE: PAGE 5 OF 9

SL NO	COMPONENTS	CHARACTERISTICS	CLASS	TYPE OF CHECK	QUANTUM OF CHECK	REFERENCE DOCUMENT	ACCEPTANCE NORMS	FORMAT OF RECORD	* D	AGENCY P	AGENCY W	AGENCY V	REMARKS
		b. SHADE	Major	Review	1 sample/lot	Tech Spec/ Approved Datasheet/ Approved Drawing	Tech Spec/ Approved Datasheet/ Approved Drawing	Manufacturer's Test Certificate	✓	2	--	1	
		c. VISCOSITY	Major	Review	1 sample/lot			Manufacturer's Test Certificate	✓	2	--	1	
		d. DRYING TIME	Major	Review	1 sample/lot			Manufacturer's Test Certificate	✓	2	--	1	
		e. DRY FILM THICKNESS	Major	Review	1 sample/lot			Manufacturer's Test Certificate	✓	2	--	1	
2.0	**INPROCESS INSPECTION**												
2.1	MACHINED END SHIELDS	a. SURFACE FINISH (Free from blow holes & cracks etc)	Major	Visual	100%	Tech Spec/ Approved Datasheet/ Approved Drawing	Tech Spec/ Approved Datasheet/ Approved Drawing	Inspection Record	✓	2	--	1	
		b. DIMENSIONS	Major	Mechanical	100%			Inspection Record	✓	2	--	1	
2.2	BODY	a. HYDRAULIC PRESSURE TESTING*	Major	Mechanical	100%			Inspection Record	✓	2	--	1	* For Flame Proof Motor
2.5	WOUND STATOR	a. H.V. TEST	Major	Electrical	100%			Inspection Record	✓	2	--	1	
		b. INSULATION RESISTANCE	Major	Electrical	100%			Inspection Record	✓	2	--	1	
		c. SURGE TEST	Major	Electrical	100%			Inspection Record	✓	2	--	1	

LEGEND: P: PERFORM, W: WITNESS, V: VERIFICATION. INDICATE **1** FOR BHEL / BHEL NOMINATED INSPECTION AGENCY) & **2** FOR VENDOR/SUB VENDOR AS APPROPRIATE AGAINST EACH COMPONENT /CHARACTERISTIC UNDER P, W & V COLUMNS. * FOR ITEMS MARKED ✓ (TICK) IN COLUMN 'D', TEST CERTIFICATES SHALL BE SUBMITTED TO BHEL FOR RECORDS.	PREPARED BY VENDOR'S SIGNATURE & STAMP	APPROVED BY BHEL QA SIGNATURE & STAMP	APPROVED BY CUSTOMER'S SIGNATURE & STAMP

VENDOR'S NAME & ADDRESS:	**MANUFACTURING QUALITY PLAN**	QP. NO.:	
	CUSTOMER: BHEL, HYDERABAD – 32. PROJECT: PRODUCT: LT MOTOR	BHEL P.O.NO.: P.O.DATE: BHEL SPEC: REV:	REV NO: DATE: PAGE 6 OF 9

SL NO	COMPONENTS	CHARACTERISTICS	CLASS	TYPE OF CHECK	QUANTUM OF CHECK	REFERENCE DOCUMENT	ACCEPTANCE NORMS	FORMAT OF RECORD	* D	AGENCY P	AGENCY W	AGENCY V	REMARKS
		d. Polarity	Major	Electrical	100%	Tech Spec/ Approved Datasheet/ Approved Drawing	Tech Spec/ Approved Datasheet/ Approved Drawing	Inspection Record	✓	2	--	1	
2.7	ROTOR	a. CONCENTRICITY	Major	Mechanical	100%			Inspection Record	✓	2	--	1	
		b. DYNAMIC BALANCING	Major	Mechanical	100%			Inspection Record	✓	2	--	1	
2.8	SPACE HEATER (if applicable)	a. INSULATION RESISTANCE	Major	Electrical	100%			Inspection Record	✓	2	--	1	
		b. H.V. TEST	Major	Electrical	100%			Inspection Record	✓	2	--	1	
		c. RESISTANCE	Major	Electrical	100%			Inspection Record	✓	2	--	1	
		d. WATTAGE TEST	Major	Electrical	100%			Inspection Record	✓	2	--	1	
3.0	**FINAL INSPECTION & TESTING**												
3.1	ROUTINE TEST	a. MEASUREMENT OF RESISTANCE ON WINDINGS OF STATOR AND WOUND ROTOR & SPACE HEATER	Major	Electrical	100%	Tech Spec/ Approved Datasheet/ Approved Drawing	Tech Spec/ Approved Datasheet/ Approved Drawing	Test Report	✓	2	1	--	
		b. INSULATION RESISTANCE TEST BEFORE AND AFTER H.V. TEST ON WINDING & SPACE HEATER	Major	Electrical	100%			Test Report	✓	2	1	--	

LEGEND: P: PERFORM, W: WITNESS, V: VERIFICATION. INDICATE **1** FOR BHEL / BHEL NOMINATED INSPECTION AGENCY) & **2** FOR VENDOR/SUB VENDOR AS APPROPRIATE AGAINST EACH COMPONENT /CHARACTERISTIC UNDER P, W & V COLUMNS. * FOR ITEMS MARKED ✓ (TICK) IN COLUMN 'D', TEST CERTIFICATES SHALL BE SUBMITTED TO BHEL FOR RECORDS.	PREPARED BY VENDOR'S SIGNATURE & STAMP	APPROVED BY BHEL QA SIGNATURE & STAMP	APPROVED BY CUSTOMER'S SIGNATURE & STAMP

VENDOR'S NAME & ADDRESS:	**MANUFACTURING QUALITY PLAN**	QP. NO.:	
	CUSTOMER: BHEL, HYDERABAD – 32. PROJECT: PRODUCT: LT MOTOR	BHEL P.O.NO.: P.O.DATE: BHEL SPEC: REV:	REV NO: DATE: PAGE 7 OF 9

SL NO	COMPONENTS	CHARACTERISTICS	CLASS	TYPE OF CHECK	QUANTUM OF CHECK	REFERENCE DOCUMENT	ACCEPTANCE NORMS	FORMAT OF RECORD	* D	AGENCY P	AGENCY W	AGENCY V	REMARKS
		c. H.V. TEST ON WINDING & SPACE HEATER	Major	Electrical	100%	Tech Spec/ Approved Datasheet/ Approved Drawing	Tech Spec/ Approved Datasheet/ Approved Drawing	Test Report	✓	2	1	--	
		d. PHASE SEQUENCE & DIRECTION OF ROTATION	Major	Electrical	100%			Test Report	✓	2	1	--	
		e. NO LOAD TEST	Major	Electrical	100%			Test Report	✓	2	1	--	
		f. REDUCED VOLTAGE RUNNING UP TEST*	Major	Electrical	100%			Test Report	✓	2	1	--	*for Squirrel Cage Motors
		g. LOCKED ROTOR TEST	Major	Electrical	100%			Test Report	✓	2	1	--	
		h. OPEN CIRCUIT VOLTAGE RATIO OF STATOR AND ROTOR WINDINGS*	Major	Electrical	100%			Test Report	✓	2	1	--	*for Slip Ring Motors
3.2	TYPE TEST	a. ALL TESTS MENTIONED IN ROUTINE TEST	Major	Electrical	1 motor in batch			Type Test Certificate	✓	2	--	1	
		b. FULL LOAD TEST to determine efficiency, power factor and slip	Major	Electrical	1 motor in batch			Type Test Certificate	✓	2	--	1	
		c. TEMPERATURE RISE TEST	Major	Electrical	1 motor in batch			Type Test Certificate	✓	2	--	1	

LEGEND: P: PERFORM, W: WITNESS, V: VERIFICATION. INDICATE **1** FOR BHEL / BHEL NOMINATED INSPECTION AGENCY) & **2** FOR VENDOR/SUB VENDOR AS APPROPRIATE AGAINST EACH COMPONENT /CHARACTERISTIC UNDER P, W & V COLUMNS. * FOR ITEMS MARKED ✓ (TICK) IN COLUMN 'D', TEST CERTIFICATES SHALL BE SUBMITTED TO BHEL FOR RECORDS.	PREPARED BY VENDOR'S SIGNATURE & STAMP	APPROVED BY BHEL QA SIGNATURE & STAMP	APPROVED BY CUSTOMER'S SIGNATURE & STAMP

VENDOR'S NAME & ADDRESS:	**MANUFACTURING QUALITY PLAN**	QP. NO.:	
	CUSTOMER: BHEL, HYDERABAD – 32. PROJECT: PRODUCT: LT MOTOR	BHEL P.O.NO.: P.O.DATE: BHEL SPEC: REV:	REV NO: DATE: PAGE 8 OF 9

SL NO	COMPONENTS	CHARACTERISTICS	CLASS	TYPE OF CHECK	QUANTUM OF CHECK	REFERENCE DOCUMENT	ACCEPTANCE NORMS	FORMAT OF RECORD	* D	AGENCY P	AGENCY W	AGENCY V	REMARKS
		d. LOAD TEST AT 125%, 100%, 75%, 50%, 25% LOAD (including measurements to allow calculation of efficiency and power factor at above loads, etc)	Major	Electrical	1 motor in batch	Tech Spec/ Approved Datasheet/ Approved Drawing	Tech Spec/ Approved Datasheet/ Approved Drawing	Type Test Certificate	✓	2	--	1	
		e. MOMENTARY OVERLOAD TEST	Major	Electrical	1 motor in batch			Type Test Certificate	✓	2	--	1	
		f. STARTING CURRENT	Major	Electrical	1 motor in batch			Type Test Certificate	✓	2	--	1	
		g. MEASUREMENT TO ALLOW CALCULATION OF PULL-OUT TORQUE	Major	Electrical	1 motor in batch			Type Test Certificate	✓	2	--	1	
		h. OVERSPEED TEST	Major	Electrical	1 motor in batch			Type Test Certificate	✓	2	--	1	
		i. DEGREE OF INGRESS PROTECTION	Major	Mechanical	1 motor in batch			Type Test Certificate	✓	2	--	1	
		j. VIBRATION TEST	Major	Mechanical	1 motor in batch			Type Test Certificate	✓	2	--	1	
3.3	FINAL INSPECTION	a. DIMENSIONAL CHECK	Major	Visual	100%			Inspection Record	✓	2	1	--	

LEGEND: P: PERFORM, W: WITNESS, V: VERIFICATION. INDICATE **1** FOR BHEL / BHEL NOMINATED INSPECTION AGENCY) & **2** FOR VENDOR/SUB VENDOR AS APPROPRIATE AGAINST EACH COMPONENT /CHARACTERISTIC UNDER P, W & V COLUMNS. * FOR ITEMS MARKED ✓ (TICK) IN COLUMN 'D', TEST CERTIFICATES SHALL BE SUBMITTED TO BHEL FOR RECORDS.	PREPARED BY VENDOR'S SIGNATURE & STAMP	APPROVED BY BHEL QA SIGNATURE & STAMP	APPROVED BY CUSTOMER'S SIGNATURE & STAMP

VENDOR'S NAME & ADDRESS:	**MANUFACTURING QUALITY PLAN**	QP. NO.:	
	CUSTOMER: BHEL, HYDERABAD – 32. PROJECT: PRODUCT: LT MOTOR	BHEL P.O.NO.: P.O.DATE: BHEL SPEC: REV:	REV NO: DATE: PAGE 9 OF 9

SL NO	COMPONENTS	CHARACTERISTICS	CLASS	TYPE OF CHECK	QUANTUM OF CHECK	REFERENCE DOCUMENT	ACCEPTANCE NORMS	FORMAT OF RECORD	* D	AGENCY P	AGENCY W	AGENCY V	REMARKS
		b. LOCATION OF TERMINAL BOX WITH ALL ACCESSORIES	Major	Visual	100%	Tech Spec/ Approved Datasheet/ Approved Drawing	Tech Spec/ Approved Datasheet/ Approved Drawing	Inspection Record	✓	2	1	--	
		c. VERIFICATION OF NAME PLATE RATING	Major	Visual	100%			Inspection Record	✓	2	1	--	
		d. PAINTING	Major	Visual	100%			Inspection Record	✓	2	1	--	
3.4	Statutory Certificates (if applicable)	BIS/CPRI/CIMFR/DGMS/CCOE/PESO	Major	Review	100%			Statutory Test Certificate	✓	2	--	1	
4.0	**PRESERVATION & PACKING**												
4.1	MOTOR	a. PACKING (Soundness)	Major	Visual	100%	Tech Spec/ Approved Datasheet/ Approved Drawing	Tech Spec/ Approved Datasheet/ Approved Drawing	Packing List	✓	2	--	1	
		b. CASE MARKING	Major	Visual	100%			Inspection Record	✓	2	--	1	

NOTE:-

1. **This MQP should be read along with specification (latest revision), approved drawings & approved data sheet.**
2. **Drawing/data sheet shall prevail over quality plan for contradiction if any between quality plan and drawing/specification.**
3. **All test certificates/reports reviewed and certified by TPI/BHEL shall be submitted to BHEL as documentation package.**
4. **All type test reports submitted shall not be older than 5 yrs from the date of purchase order.**
5. **Any project/customer specific requirements which shall be notified have to be fulfilled by the vendor at the time of execution of order.**

ABBREVIATIONS:-

BDV: Break Down Voltage	IP: Ingress Protection	CIMFR: Central Institute of Mining & Fuel Research
OD: Outer Diameter	HV: High Voltage	DGMS: Directorate General of Mines Safety
ID: Internal Diameter	TC: Test Certificate	CCOE: Chief Controller of Explosives
BIS: Bureau of Indian Standards	CPRI: Central Power Research Institute	PESO: Petroleum and Explosives Safety Organisation

LEGEND: P: PERFORM, W: WITNESS, V: VERIFICATION. INDICATE **1** FOR BHEL / BHEL NOMINATED INSPECTION AGENCY) & **2** FOR VENDOR/SUB VENDOR AS APPROPRIATE AGAINST EACH COMPONENT /CHARACTERISTIC UNDER P, W & V COLUMNS. * FOR ITEMS MARKED ✓ (TICK) IN COLUMN 'D', TEST CERTIFICATES SHALL BE SUBMITTED TO BHEL FOR RECORDS.	PREPARED BY VENDOR'S SIGNATURE & STAMP	APPROVED BY BHEL QA SIGNATURE & STAMP	APPROVED BY CUSTOMER'S SIGNATURE & STAMP

Typical Quality Plan for HT Motor

SL. NO.	COMPONENT AND OPERATION	CHARACTERISTICS	CLASS	TYPE OF CHECK	QUANTUM OF CHECK	REFERNCE DOCUMENT	ACCEPTANCE NORMS	FORMAT OF RECORD	AGENCY			REMARK
									BHEL	CUST	TPIA	
1	2	3	4	5	6	7	8	9		10		11
1.0	**BROUGHT OUT ITEMS-Shaft Forging, Magnetic Sheet Steel, Stator Winding Copper, Rotor Winding Copper**											
		Properties as per Drg./Spec.	Major	Chem./Mech./Elect./NDT	Sample	Specification/ Drawing	Specification /Drawing	CC	R	---	---	Stock Items- BHEL QC Certificate of comformance will be submitted
2.0	**IN-PROCESS INSPECTION**											
2.1	**STATOR COMPLETE**											
2.1.1		Measurement of resistance of RTDs, HV & IR of stator winding	Major	Electrical	100%	TI	TI	TR	P	---	---	
2.1.2		Inter turn insulation surge voltage (Baker) test	Major	Electrical	100%	INSK46004	INSK46004	TR	P	---	---	
2.1.3		Tan delta test	Major	Electrical	100%	ITS-489/INSK-46004	ITS-489/INSK-46004	TR	P	---	---	>5kV, Values for information only
2.2	**ROTOR COMPLETE**											
2.2.1		Insulation Resistance, Resistance measurement (SRIM Type)	Major	Electrical	100%	Drg./Data Sheet	Drg./Data Sheet	TR	P	---	---	
2.2.2		Dynamic Balancing at Rated Speed	Major	Measurement	100%	ISO 1940 Gr. 2.5	ISO 1940 Gr. 2.5	TR	P	---	---	Subject to test plant limitation

SL. NO.	COMPONENT AND OPERATION	CHARACTERISTICS	CLASS	TYPE OF CHECK	QUANTUM OF CHECK	REFERNCE DOCUMENT	ACCEPTANCE NORMS	FORMAT OF RECORD	AGENCY			REMARK
									BHEL	CUST	TPIA	
1	2	3	4	5	6	7	8	9		10		11
3.0	**ASSEMBLED MOTOR -ELECTRICAL TESTS**											
3.1.	**ROUTINE TESTS-**											
3.1.1		Verification of DOR, Name Plate, TERMINAL Box location	Major	Electrical	Each Motor	OGA drawing	OGA drawing	TR	P	W	---	
3.1.2		Measurement of resistance of stator (rotor for SRIM Type)	Major	Electrical	Each Motor	IS325/IS4029	IS 325/data Sheet	TR	P	W	---	
3.1.3		IR before and after HV test	Major	Electrical	Each Motor	IS325/IS4029	IS 325/data Sheet	TR	P	W	---	
3.1.4		HV Test	Major	Electrical	Each Motor	IS325/IS4029	IS 325/data Sheet	TR	P	W	---	
3.1.5		Polarization Index	Major	Electrical	Each Motor	IS325/IS4029	IS 325/data Sheet	TR	P	W	---	3.3 kV and above motors-PI not less than 2
3.1.6		No load running of motors and measurement of current, Voltage, Power input,& Speed, Slip	Major	Electrical	Each Motor	IS325/IS4029	IS 325/data Sheet	TR	P	W	---	
3.1.7		Locked Rotor Test at suitable reduced voltage measurement of Current, Volatge and Power Input (rotor Current for SRIM)	Major	Electrical	Each Motor	IS325/IS4029	IS 325/data Sheet	TR	P	W	---	
3.1.8		IR & HV test of Space Heater. & Space heater, RTD/BTD resistance.	Major	Electrical	Each Motor	IS325/IS4029	IS 325/data Sheet	TR	P	W	---	
3.1.9		Shaft voltage measurement during no load run	Major	Electrical	Each Motor	Drawing	Drawing	TR	P	W	---	Applicable for horizontal motors only
3.2.0		Open Ckt. Test (for SRIM) Only	Major	Electrical	Each Motor	IS325/IS4029	IS 325/data Sheet	TR	P	W	---	
3.2.1		Vibration Test during no load run	Major	Electrical	Each Motor	IS325/IS4029	IS12075	TR	P	W	---	
3.2.2		Reduced voltage running up test	Major	Electrical	Each Motor	IS325/IS4029	IS 325/data Sheet	TR	P	W	---	

SL. NO.	COMPONENT AND OPERATION	CHARACTERISTICS	CLASS	TYPE OF CHECK	QUANTUM OF CHECK	REFERNCE DOCUMENT	ACCEPTANCE NORMS	FORMAT OF RECORD	AGENCY			REMARK
									BHEL	CUST	TPIA	
1	2	3	4	5	6	7	8	9	10			11
3.2	**TYPE TESTS-**											
3.2.1		All test covered in Routine Test	Major	Electrical	One Motor	IS325/IS4029	Data Sheet	TR	P	W	---	**Type test report of similar frame no. motor will be furnished. In absence of type test report test will be conducted & report will be furnished for review**
3.2.2		Noise Measurement during no load run	Major	Electrical	One Motor	IS12065	Data Sheet	TR	P	W	---	
3.2.3		Temp Rise by Test	Major	Electrical	One Motor	IS325/IS4029	Data Sheet	TR	P	W	---	Subject to test plant limitation
3.2.4		Calculation of efficiency by summation of loss method at 1/2, 3/4 & full load	Major	Electrical	One Motor	IS325/IS4029	Data Sheet	TR	P	W	---	QAP Cl. No.3.2.4,3.2.5, 3.2.7- are not possible for 2 pole (3000RPM) and above 900 KW motors. As motors shall be tested by mixed frequency method
3.2.5		Full load measurement of current, Voltage, Power Input,& , Slip, PF at 50%, 75% & 100%	Major	Electrical	One Motor	IS325/IS4029	IS325/Data Sheet	TR	P	W	---	
3.2.6		Over speed Test at 120% of rated speed	Major	Electrical	One Motor	IS325	Data Sheet	TR	P	W	---	
3.2.7		Starting torque, starting current and pull out torque calculation	Major	Electrical	One Motor	JEC-37	Data Sheet	TR	P	W	---	Based on no load reading
3.2.8		Momentary Over Load test	Major	Electrical	One Motor	IS325/IS4029	IS325/Data Sheet	TR	P	W	---	Shall be performed on 4 & 6 pole motors if current will be <=125 Amps.

SL. NO.	COMPONENT AND OPERATION	CHARACTERISTICS	CLASS	TYPE OF CHECK	QUANTUM OF CHECK	REFERNCE DOCUMENT	ACCEPTANCE NORMS	FORMAT OF RECORD	AGENCY			REMARK
									BHEL	CUST	TPIA	
1	2	3	4	5	6	7	8	9		10		11
4	**ASSEMBLED MOTOR - FINAL INSPECTION**											
4.1	**FINISHED ASSEMBLED MOTOR**											
4.1.1		Shaft Centre Height, Keyway and shaft extension dimensions	Major	Measurment	100%	Drawing	Drawing	IR	P	–	–	
4.1.2		Check for fitment of all components and accessories	Major	visual	100%	OGA Drawing	OGA Drawing	CC	P	–	–	
4.2	**PAINTING AND PRESERVATION**											
4.2.1		Check for painting	Major	Visual/Measurement	100%	Drawing	Drawing	CC	p	–	–	
5.0	**DOCUMENTS FOR SUBMISSION**											
	(1) Final Routine Test Certificates (2) Type Test Certificates (3) Cimfr And Ccoe Certificates (4) Degree of protection of enclosure (5) Fault level withstand capacity.											

Typical Quality Plan for Diesel Engine

Sr. No	Components	Characteristic	Type of Check	Quantum of Check	Acceptance Norms	Documents to be submitted	GCL	Client / TPI
1	Crankshaft	Material	Chemical & Mechanical	Sampling	As per GCL Drawing	Compliance Certificate / Test Report	P	R
		Measurment	Dimensional measurment	100.00%	As per GCL Drawing	Compliance Certificate	P	R
		Crack Test	NDT (MPI)	100.00%	No Cracks are acceptable	Compliance Certificate / Test Report	P	R
2	Connecting Rod	Material	Chemical & Mechanical	Sampling	As per GCL Drawing	Compliance Certificate / Test Report	P	R
		Measurment	Dimensional measurment	100.00%	As per GCL Drawing	Compliance Certificate	P	R
		Crack Test	NDT (MPI)	100.00%	No Cracks are acceptable	Compliance Certificate / Test Report	P	R
3	Cylinder Block/Crank case with Liners	Pressure Test	Pressure Test	100.00%	No Leakages acceptable	Compliance Certificate / Test Report	P	R
		Material	Chemical & Mechanical	Sampling	As per GCL Drawing	Compliance Certificate / Test Report	P	R
		Measurment	Dimensional measurment	100.00%	As per GCL Drawing	Compliance Certificate	P	R
4	Cylinder Head	Pressure Test	Pressure Test	100.00%	No Leakages acceptable	Compliance Certificate / Test Report	P	R
		Material	Chemical & Mechanical	Sampling	As per GCL Drawing	Compliance Certificate / Test Report	P	R
		Measurment	Dimensional measurment	100.00%	As per GCL Drawing	Compliance Certificate	P	R
5	Engine Performance test	Testing	Performance	100.00%	BS-5514 / ISO 3046 / IS 10000	Engine Test Report with RPM, Torque, BHP, Exhaust Temp, Noise & vibration	P	W

Diesel Tank

S.NO.	COMPONENT/OPERATION	CHARACTERISTICS CHECKED	TYPE/METHOD OF CHECK	EXTENT OF CHECK	REFERENCE DOCUMENT	ACCEPTANCE NORMS	FORMAT OF RECORD	SCOPE OF INSPECTION			REMARKS
								M	C	N	
1	Finish Product	Workmanship	Visual	100%	N.A.	Free from Defects	IR	P	W	R	
		Dimension/Size	Measurement	100%	Appr. Datasheet/Drg.	Appr. Datasheet/Drg.	IR	P	W	R	

LEGENDS: REVIEWED & APPROVED

ANNEXURE – 10

(Miscellaneous information from customer specification)

to placement of Letter of Intent. This approved list will be binding to the bidder. In the said list, Owner reserves the right to include reputed/reliable vendors of his own choice. Regarding the various other sub-vendors, the list would be submitted within six (6) months of the award of the contract that shall be scrutinized by the Owner to accord approval. In such list Owner reserves the right to include vendors of his own choice. No further vendor approval will be given after twelve (12) months. On the quality plans, the customer hold points will also be identified based on which Owner would give clearance for the manufacture to proceed further.

Quality assurance/Inspection group of Owner or its representative would issue a material despatch clearance certificate (MDCC) after the inspection clearance which will enable the Contractor to despatch the equipment and claim the payment. In the despatch programme, the Contractor shall indicate a schedule of estimated programme, tonnages specifically identifying various oversize dimensioned consignments (ODC). Further the Contractor will also be required to ensure at all stages of shipment that packing of all shipments despatched are suitable for ocean freight to India, handling at the port of entry, inland transportation and preservation at site upto erection. All despatch details & item lists shall be made available to both Owner & site immediately after shipping.

The Contractor shall also expedite all despatches from their own works/works of their sub-vendors, so as to match with the various activities mentioned at 1.04.03 above.

1.04.05 Construction Management

Based on the L-1 Master Network Programme, within two (2) months of the issue of Letter of Intent, the Contractor shall submit a programme of construction/ erection/ commissioning, either in continuation with the manufacture and despatch or separately for the implementation. These programmes would be amplified showing when the civil drawings shall be released by him and construction of civil works shall be completed by him to facilitate start of erection and subsequent activities and shall form the basis for site execution and detailed monitoring. The three monthly rolling programme with the first month's programme being tentative based on the site conditions would be prepared based on these L-3 programmes. The Contractor shall also be involved along with the Owner to tie up detailed resource mobilisation plan over the period of time of the contract matching with the performance targets.

The L-3 programme would be jointly finalised by the site in charge of the Contractor with the Owner's project coordinator as well as the site planning representative. The erection programme will also identify the sequential erectable tonnages that are required for various equipment which should be taken care of in the despatch programmes.

Erection and commissioning of the equipment shall also be done under the supervision of experts from the respective equipment/ system supplier.

1.04.06 Spares Management

owner for review / approval. These Quality Plans / procedures will detail out, for all equipment, the quality practices and procedures etc. to be followed by the Contractor's site Quality Control organisation, during various stages of site activities from receipt of materials/ equipment at site.

2.04.00 The Bidder shall also furnish copies of the reference documents/plant standards/acceptance norms/tests and inspection procedure etc., as referred in Quality Plans along with Quality Plans. These Quality plans and reference documents/standards etc. will be subject to Owner's approval without which manufacture shall not proceed. These approved documents shall form a part of the contract. In these approved quality plans, Owner/Authorised representative shall identify customer hold points (CHP), test/checks which shall be carried out in presence of the Owners Engineer or his authorised representative and beyond which the work will not proceed without consent of Owner/Authorised representative in writing. All deviations to this specification, approved quality plans and applicable standards must be documented and major deviations in the form of Non Conformity Report shall be referred to Owner/Authorised representative for approval and dispositioning.

2.05.00 No material shall be despatched from the manufacturer's works before the same is accepted subsequent to pre-despatch final inspection including verification of records of all previous tests/inspections by Owner's Engineer/ Authorised representative for “CHP” and “W” points marked in quality plans , and duly authorised for despatch by issuance of Material Despatch Clearance Certificate (MDCC). For items which is not under owner’s inspection the contractor shall apply for despatch clearance (MDCC) from owner by submitting their internal inspection reports and quality records

2.06.00 All materials used or supplied shall be accompanied by valid and approved materials certificates and tests and inspection report. These certificates and reports shall indicate the sheet serial numbers or other such acceptable identification numbers of the material. The material certified shall also have the identification details stamped on it.

2.07.00 Castings and forgings used for construction shall be of tested quality. Details of results of chemical analysis, heat treatment record, mechanical property test results shall be furnished.

2.08.00 All welding and brazing shall be carried out as per procedure drawn and qualified in accordance with requirements of ASME Section - IX (latest edition) or other International equivalent standard acceptable to the Owner.

All brazers, welders etc. employed on any part of the contract at Contractor's/ Sub-Contractor's works or at site shall be qualified as per ASME Section-IX (latest edition) or equivalent international standard approved by the Owner. Such qualification tests shall be conducted in presence of Owner / his authorised representative or owner approved Third Party Inspection Agency(TPIA). Previously qualified WPS & PQR shall be acceptable if witnessed by owner’s approved TPIA.

For welding of pressure parts and high pressure piping coming under IBR purview, the requirements of IBR shall also be complied with.

5.00.00 OPERATING MANUALS AND MAINTENANCE INSTRUCTIONS

5.01.00 The Contractor shall provide at least six (6) months before the time of commissioning and before taking over of the plant and equipment, all necessary maintenance manuals and operating instructions. The instruction manual shall be submitted in the form of one (1) soft copy in CD and 15 hard copies as per distribution schedule (Annexure-1).

5.02.00 The information provided, which shall be contained in loose leaf stiff backed covers, shall include :

a) A complete inventory of all main items of plant, with identification details.

b) Service manuals for all plant and equipment giving full descriptions of the main items and auxiliary items such as power packs, hydraulic equipment, actuators, lubricating pumps, etc.

c) A separate electrical manual covering items such as switchgear, cabling, instrumentation, controls, cabling layouts and wiring diagrams.

d) A schedule of recommendations for routine maintenance of all electrical and mechanical equipment, recommended inspection point, information on detection, cause and rectifications of troubles & faults.

e) A lubrication schedule with all necessary drawings diagrams to identify the lubrication points.

f) Manufacturer's literature.

5.03.00 The instruction manual shall be subject to the approval of Owner.

6.00.00 PLANT HANDBOOK

The Contractor shall submit to the Engineer, a preliminary plant handbook preferably in A-4 size sheets which shall contain the design and performance data of various plant, equipment and systems covering the complete project including single line flow diagrams, within twenty four (24) months from the date of his acceptance of the Letter of Intent. The final plant handbook complete in all respects shall be submitted by the Contractor six (6) months before start-up and commissioning activities. The plant handbook shall be submitted as per distribution schedule.

7.00.00 CONTRACT STAGE DOCUMENT SUBMISSION AND APPROVAL PROCEDURE

7.01.00 Within fifteen (15) days to one month of issue of Letter of Intent (LOI) by the Owner, the Contractor shall furnish a schedule of drawings and design

12.00.00 PLANT LIFE AND MODE OF OPERATION

The complete plant including all the equipment and systems individually and collectively shall be designed for continuous operation for an economic service life of thirty (30) years under the prevailing site conditions and for the type of duty intended.

The critical components of the Steam Generator, Turbine-Generator and Auxiliary equipment, the life of which is limited by time and temperature dependent mechanisms such as thermal stress, creep and low cycle fatigue, are to be designed considering expected (hot, warm and cold) start-up, shut-down and cyclic load variations.

The allowable stresses shall be reduced so that life expectancy to minimum 2,00,000 hours of operation can be achieved. The Bidder shall discuss this aspect in his technical proposal.

The unit would be operated on base load with cyclic load variation. The load variation is expected to be as per schedule depending on power demand.

The expected start-ups should be considered as minimum
(Based on HPT metal temperature)

Cold start-up (>72 hrs. shutdown)	:	6 per year
Warm start-up (between 10 to 72 hrs. of shutdown)	:	40 per year
Hot start-up (less than 10 hrs. shutdown)	:	160 per year

13.00.00 PACKAGING & MARKING

All the equipment shall be suitably protected, coated, covered or boxed and crated to prevent damage or deterioration during transit, handling and storage at site till the time of erection. While packing all the materials, the limitations from the point of view of availability of railway wagon sizes in India should be taken account of. The details of various wagons normally available with Indian Railways for transportation of heavy equipment shall be considered by the Bidder. The Contractor shall be responsible for all loss or damage during transportation, handling and storage due to improper packing.

As per the information available, the dimensions of OD consignment for transportation of the equipment by rail (if any equipment to be handled through rail transportation) are as below :

a)	Width of the Package (from centre-line of rails - 1.6 metres on both sides)	:	3.2 Meters
b)	Height of the package from rail top	:	4.47 Meters

The above indicates the dimensions which can be normally transported on the

wagons without infringement of the "moving gauge". This is however not indicative of the consignment which can be carried out with infringement of "moving gauge" duly authorised and approved by the Indian Railways. There may be difference between the "moving gauge" and the "fixed structure gauge" and consignments infringing the "moving gauge" can be moved after investigation regarding possible infringement with the fixed structures. As the critical fixed structures in each route are different, consignments infringing moving dimensions have to be individually investigated to select a route and also determine the restrictions under which such movement is to be carried out. Such routes selected or other mode of transport envisaged is to be clearly brought out in the proposal wherever transport of over dimensional equipment is involved.

Bidder to consider unloading of material delivered through rail transportation, at near by railway station/ site unloading siding. The subsequent transportation up to project work place shall be considered by road only. All unloading and handling equipment both at railway station siding and at project site shall be arranged by the Bidder. Necessary arrangement to be organized with the railway authority for such purpose shall also be under the scope of services of the Bidder. Bidder may consider entire material delivered up to site through rail transportation only.

The identification marking indicating the name and address of the consignee shall be clearly marked in indelible ink on two opposite sides and top of each of the packages. In addition the Contractor shall include in the marking gross and net weight, outer dimension and cubic measurement. Each package shall be accompanied by a packing note (in weather proof paper) quoting specifically the name of the Contractor, the number and date of contract and names of the office placing the contract, nomenclature of contents and Bill of Material.

For imported equipment and material, suitable port facilities may be used in which case material may be transported from the port by tractor-trailer. Bidder may consider this aspect.

14.00.00 **PROTECTION**

Equipment having antifriction or sleeve bearings shall be protected by weather-tight enclosures. Coated surfaces shall be protected against impact, abrasion, discoloration and other damages. Surfaces that are damaged shall be repainted.

Electrical equipment, controls and insulations shall be protected against moisture and water damages. All external gasket surfaces and flange faces, couplings, rotating equipment shafts, bearings and like items shall be thoroughly cleaned and coated with rust preventive compound as specified above and protected with suitable wood, metal or other substantial type covering to ensure their full protection. All exposed threaded parts shall be greased and protected with metallic or other substantial type protectors.

All piping, tubing and conduit connections on equipment and other equipment openings shall be closed with rough usage covers or plugs. Female threaded openings shall be closed with rough usage covers or forged steel plugs. The closures shall be taped to seal the interior of the equipment. Open ends of

piping, tubing and conduit shall be sealed and taped.

Returnable containers and special shipping devices shall be returned by the manufacturer's field representative at the Contractor's expense.

15.00.00 ENVIRONMENT PROTECTION AND NOISE LEVEL REQUIREMENT

15.01.00 Environment Protection

The plant shall be designed for installation and operation in harmony with the surrounding environment and all measures of pollution control shall be ensured by the Bidder to restrict pollution from the liquid effluent and stack emission within the limits as given below with due consideration of Environment (Protection) Rules 1986 as amended till date.

In case the Ministry of Environment & Forest stipulate any other conditions not specified hereunder while clearing the project shall be complied with the plant by the contractor.

15.01.01 For Liquid Effluent

a) Provision laid down in schedule-I for Thermal Power Plants and also in Schedule-VI. General Standards for discharge of Environmental pollutants Part-A : Effects of Environmental (protection) Rules 1986, as amended till date.

b) Any specific requirement of State Pollution Authorities over and above the above stipulation.

15.01.02 For Air Emission

a) Suspended Particulate Matter i.e. dust burden at chimney outlet - Maximum 50 mg/Nm^3 (with worst coal and one field out at TMCR).

b) NO_x - 365 ppm Max. or 750 mg/Nm^3 (Equivalent NO_2).

c) SO_2 - Concentration based standard 2000 mg/Nm^3. Load based standard 0.2 metric tonne /MWe/day (for first 500 MW and 0.1 metric tonne/MWe/day for rest of the capacity above 500 MW)

In absence of Indian Standard for emission from power plants as on date, for certain gaseous effluents, the internationally accepted World Bank Standard is to be followed. Indian Standard for emission of power plants are under formulation. Should this standard is published before finalisation of the contract, the bidder has to comply the more stringent of the above norm or the new Indian Standard.

The bidder shall include in his scope all necessary equipment and measuring instruments to comply with above requirements. Location and accessibility of the instruments shall be properly coordinated.

15.02.00 **Noise Level Requirement**

The plant will be designed, constructed and provided with suitable acoustic measures to ensure the noise level criteria as per the following stipulations.

a) Maximum noise level shall not exceed 85 dB (A) when measured at 1.0M away from the noise emission source.

b) Maximum noise level from its source within the premises shall not exceed 70 dB (A) as per Environment (Protection) Rules 1986, Schedule-III, `Ambient Air Quality Standards' in respect of noise.

c) Any statutory changes in stipulations regarding noise limitation that may occur in future according to State Pollution Control Board or Central pollution Control Board or Ministry of Environment & Forest regulation during tenure of the contract, the contractor shall comply with the requirement.

An exception will be made for the plant at startup operations and other big pressure reducing devices operating during emergency periods and for the safety valves.

16.00.00 **INSPECTION AND TESTING**

16.01.00 **Inspection and Tests during Manufacture**

16.01.01 The method and techniques to be used by the Contractor for the control of quality during manufacture of all plant and equipment shall be agreed with the Owner prior to the Award of Contract.

16.01.02 The Owner's general requirements with respect to quality control and the required shop tests are set out elsewhere in this specification.

16.01.03 Before any item of plant or equipment leaves its place of manufacture the Owner shall be given the option of witnessing inspections and tests for compliance with the specification and related standards.

16.01.04 Advance notice shall be given to the Owner as agreed in the Contract, prior to the stage of manufacture being reached, and the piece of plant must be held at this stage until the Owner has inspected the piece, or has advised in writing that inspection is waived. If having consulted the Owner and given reasonable notice in writing of the date on which the piece of plant will be available for inspection, the Owner does not attend the Contractor may proceed with manufacture having forwarded to the Owner duly certified copies of his own inspection and test results.

The Contractor shall forthwith forward to the engineer duly certified copies of the Test Certificates in six copies (one to the Purchaser and five to the Consulting Engineer) for approval. Distribution of six (6) copies of Test Certificates for approval will be two(2) copies to owner and four(4) copies to consultant. These four(4) copies will be further distributed by consultant after approval to owner, site and bidder. One copy will be retained with the

ANNEXURE – 11

(Painting Procedure)

VOID

ANNEXURE – 12

(Sub-Vendor List)

	APPROVED VENDORS FOR INSTRUMENTS (FROM PMD)	
PMD No	PMD Desc.	Vendor Name
PE.EP.001	BATTERY CHARGER	AMARA RAJA POWER SYSTEMS LTD
PE.EP.001	BATTERY CHARGER	CHHABI ELECTRICALS P LTD.
PE.EP.001	BATTERY CHARGER	DUBAS ENGINEERING PVT LTD.
PE.EP.001	BATTERY CHARGER	HBL POWER SYSTEMS LTD
PE.EP.001	BATTERY CHARGER	KERALA STATE ELECTRONICS
PE.EP.001	BATTERY CHARGER	STATCON POWER CONTROLS LTD.
PE.IN.520	DIFFERENTIAL PRESSURE INDICATOR / GAUGES	A.N. INSTRUMENTS PVT. LTD.,
PE.IN.520	DIFFERENTIAL PRESSURE INDICATOR / GAUGES	ASHCROFT INDIA PVT. LTD.
PE.IN.520	DIFFERENTIAL PRESSURE INDICATOR / GAUGES	BAUMER TECHNOLOGIES
PE.IN.520	DIFFERENTIAL PRESSURE INDICATOR / GAUGES	GENERAL INSTRUMENTS CONSORTIUM
PE.IN.520	DIFFERENTIAL PRESSURE INDICATOR / GAUGES	HIRLEKAR PRECISION ENGG. PVT. LTD.
PE.IN.520	DIFFERENTIAL PRESSURE INDICATOR / GAUGES	SAMSON CONTROLS PVT LTD.,
PE.IN.520	DIFFERENTIAL PRESSURE INDICATOR / GAUGES	SWITZER PROCESS INSTRUMENTS
PE.IN.520	DIFFERENTIAL PRESSURE INDICATOR / GAUGES	WALCHANDNAGAR INDUSTRIES LIMITED
PE.IN.540	LEVEL GUAGES (MAGNETIC TYPE)	V AUTOMAT AND INSTRUMENTS PVT LTD
PE.IN.540	LEVEL GUAGES (MAGNETIC TYPE)	SCIENTIFIC DEVICES (BOMBAY) PVT. LT
PE.IN.540	LEVEL GUAGES (MAGNETIC TYPE)	J.N.MARSHALL LTD
PE.IN.540	LEVEL GUAGES (MAGNETIC TYPE)	D.K.INSTRUMENTS (P) LTD.,
PE.IN.548	LEVEL TRANSMITTER (ELECTRONIC - SMART)	V AUTOMAT AND INSTRUMENTS PVT LTD
PE.IN.548	LEVEL TRANSMITTER (ELECTRONIC - SMART)	CHEMTROLS INDUSTRIES LTD.,
PE.IN.548	LEVEL TRANSMITTER (ELECTRONIC - SMART)	DRESSER VALVE INDIA PVT.LTD.
PE.IN.561	RESISTANCE TEMPERATURE DETECTORS (RTD & THERMOCOUPLES)	BAUMER TECHNOLOGIES
PE.IN.561	RESISTANCE TEMPERATURE DETECTORS (RTD & THERMOCOUPLES)	DETRIV INSTRUMENTATION
PE.IN.561	RESISTANCE TEMPERATURE DETECTORS (RTD & THERMOCOUPLES)	EXOTHERM INSTRUMENTS
PE.IN.561	RESISTANCE TEMPERATURE DETECTORS (RTD & THERMOCOUPLES)	GOA INSTRUMENTS INDUSTRIES
PE.IN.561	RESISTANCE TEMPERATURE DETECTORS (RTD & THERMOCOUPLES)	PROTECH CONTROL INSTRUMENTS
PE.IN.561	RESISTANCE TEMPERATURE DETECTORS (RTD & THERMOCOUPLES)	PYRO ELECTRIC INSTRUMENTS GOA
PE.IN.561	RESISTANCE TEMPERATURE DETECTORS (RTD & THERMOCOUPLES)	TEMPSENS INSTRUMENTS (I) PVT.LTD.
PE.IN.561	RESISTANCE TEMPERATURE DETECTORS (RTD & THERMOCOUPLES)	THERMAL INSTRUMENT INDIA
PE.IN.574	THERMOMETERS	FORBES MARSHALL (HYD) PVT LIMITED,
PE.IN.574	THERMOMETERS	GOA INSTRUMENTS INDUSTRIES
PE.IN.574	THERMOMETERS	ASHCROFT INDIA PVT. LTD.
PE.IN.574	THERMOMETERS	H.GURU INSTRUMENTS(S.I)PVT.LTD
PE.IN.574	THERMOMETERS	WALCHANDNAGAR INDUSTRIES LIMITED
PE.IN.574	THERMOMETERS	SCIENTIFIC DEVICES (BOMBAY) PVT. LT
PE.IN.574	THERMOMETERS	BAUMER TECHNOLOGIES
PE.IN.574	THERMOMETERS	GENERAL INSTRUMENTS CONSORTIUM
PE.IN.574	THERMOMETERS	A.N. INSTRUMENTS PVT. LTD.,
PE.IN.574	THERMOMETERS	PROTECH CONTROL INSTRUMENTS
PE.IN.579	TEMPERATURE TRANSMITTER	ABB LIMITED, HYD

PMD No	PMD Desc.	Vendor Name
PE.IN.579	TEMPERATURE TRANSMITTER	EMERSON PROCESS MGT (I) PVT LTD
PE.IN.579	TEMPERATURE TRANSMITTER	HONEYWELL AUTOMATION INDIA LIMITED
PE.IN.579	TEMPERATURE TRANSMITTER	YOKOGAWA INDIA LIMITED
PE.IN.586	LEVEL TRANSMITTER (RADAR, NON-CONTACT TYPE)	MAGNETROL INTERNATIONAL N.V.
PE.IN.586	LEVEL TRANSMITTER (RADAR, NON-CONTACT TYPE)	ENDRESS & HAUSER GMBH + CO.
PE.IN.586	LEVEL TRANSMITTER (RADAR, NON-CONTACT TYPE)	PUNE TECHTROL PVT LTD
PE.IN.586	LEVEL TRANSMITTER (RADAR, NON-CONTACT TYPE)	SAAB ROSEMOUNT TANK GUAGING
PE.IN.586	LEVEL TRANSMITTER (RADAR, NON-CONTACT TYPE)	HONEYWELL AUTOMATION INDIA LIMITED
PE.IN.586	LEVEL TRANSMITTER (RADAR, NON-CONTACT TYPE)	VEGA INDIA LEVEL & PRESSURE MEASURE
PE.MP.013	FUEL OIL FINE FILTERS	EPE PROCESS FILTERS &
PE.MP.013	FUEL OIL FINE FILTERS	FIL SEP EQUIPMENTS PVT. LTD.
PE.MP.013	FUEL OIL FINE FILTERS	FILTER CONCEPT PVT. LTD.
PE.MP.013	FUEL OIL FINE FILTERS	NIRMAL INDUSTRIAL CONTROLS PVT LTD
PE.MP.013	FUEL OIL FINE FILTERS	PALL INDIA PVT. LTD.,
PE.MP.013	FUEL OIL FINE FILTERS	PETROMAR ENGINEERED SOLUTIONS
PE.MP.013	FUEL OIL FINE FILTERS	VIZAG FILTERS (P) LTD
	APPROVED VENDORS LIST FOR MOTORS (FROM PMD)	
FOR LT MOTOR		
PE.EP.005	LT MOTORS (SAFE AREA)	ABB LIMITED, HYD
PE.EP.005	LT MOTORS (SAFE AREA)	ALSTOM T&D INDIA LIMITED
PE.EP.005	LT MOTORS (SAFE AREA)	BHARAT BIJLEE LTD, MUMBAI
PE.EP.005	LT MOTORS (SAFE AREA)	CROMPTON GREAVES
PE.EP.005	LT MOTORS (SAFE AREA)	KIRLOSKAR ELEC.CO.LTD
PE.EP.005	LT MOTORS (SAFE AREA)	LAXMI HYDRAULICS PVT. LTD.
PE.EP.005	LT MOTORS (SAFE AREA)	SIEMENS INDIA LTD SECBAD.
FOR HT MOTOR		
HT MOTOR SHOULD BE PROCURED FROM BHEL BHOPAL ONLY. NO OTHER MAKE IS ACCEPTABLE		

Sl.no	Material Description	Vendor	Remarks
10	Butterfly Valve (CAST IRON & CS)	DURGA VALVES PRIVATE LIMITED, SECUNDERABAD, TELANGANA	Approved
		L & T VALVES LIMITED, HYDERABAD, TELANGANA	Approved
		BOTELI VALVE GROUP COMPANY LTD., CHINA	Not Acceptable
		ASHWATHI CONTROLS PVT. LTD., AHMEDABAD, GUJARAT	Not Acceptable
		INSTRUMENTATION LTD, PALAKKAD, KERALA	Approved
		FOURESS ENGINEERING (I)PVT.LTD, HYDERABAD, TELANGANA	Approved
		WEIR BDK VALVES, HUBLI, KARNATAKA	Approved
		UNIQUE VALVES LIMITED, PUNE, MAHARASTRA	Not Acceptable
		INTER VALVE (INDIA) LTD.,PUNE, MAHARASTRA	Approved
		DEMBLA VALVES LTD., THANE, MAHARASTRA	Approved
		DYNAMIC VALVES PVT. LTD., NAVI MUMBAI, MAHARASTRA	Not Acceptable
		HI-TECH BUTTERFLY VALVES INDIA, INDORE, MADHYA PRADESH	Not Acceptable
		LEADER VALVES LIMITED, JALANDAR, PUNJAB	Not Acceptable
		GALAXY CONTROLS PVT LTD., CHENNAI, TAMIL NADU	Not Acceptable
		ADVANCE VALVES PVT.LTD. GREATER NOIDA, UTTAR PARDESH	Approved
		KAMALA VALVES & ENGINEERING, HOWRAH, WEST BENGAL	Not Acceptable
		VENUS PUMP & ENGINEERING WORKS, HOWRAH, WEST BENGAL	Approved
12	ELECTRICAL HOIST	SOUTHERN PLANTAIDS PVT LIMITED, HRDERABAD, TELANGANA	Not Acceptable
		GRIP ENGINEERS PVT. LTD., HYDERABAD, TELANGANA	Approved
		ROCK WELL HOISTO CRANES PVT. LTD., NEW DELHI	Approved
		CENTURY CRANE ENGINEERS, PALWAL, HARYANA	Approved
		EDDYCRANES ENGINEERS PVT., MUMBAI, MAHARASTRA	Approved
		MM ENGINEERS PVT. LTD., COIMBATORE, TAMIL NADU	Not Acceptable

Chief Engineer
Thermal Projects Construction
TSGENCO, Vidyut Soudha,
Khairatabad, Hyderabad-82

Sl.no	Material Description	Vendor	Remarks
13	EOT CRANES	SHIVPRA CRANES PVT. LTD.,HYDERABAD, TELANGANA	Not Acceptable
		GRIP ENGINEERS PVT. LTD.HYDERABAD, TELANGANA	Approved
		ROCK WELL HOISTO CRANES PVT. LTD., NEW DELHI	Approved
		ANUPAM INDUSTRIES LIMITED, ANAND, GUJARAT	Approved
		WMI CRANES LTD., BANGALORE, KARNATAKA	Approved
		EDDYCRANES ENGINEERS PVT., MUMBAI, MAHARASTRA	Approved
		TUOBRO FURGUSON (INDIA) PVT. LTD., KOLKATA, WEST BENGAL	Approved
14	Control Cables	UNIVERSAL CABLES LTD, HYDERABAD, TELANGANA	Approved
		THERMO CABLES LIMITED, HYDERABAD, TELANGANA	Approved
		KEC INTERNATIONAL LIMITED, HYDERABAD, TELANGANA	Not Acceptable
		NICCO CORPORATION LTD HYD, HYDERABAD, TELANGANA	Approved
		POLYCAB INDUSTRIES PVT.LTD., HYDERABAD, TELANGANA	Approved
		CORDS CABLE INDUSTRIES LTD., NEW DELHI	Approved
		CMI LIMITED, NEW DELHI	Not Acceptable
		KEI INDUSTRIES LIMITED, NEW DELHI	Approved
		DELTON CABLES LIMITED, NEW DELHI	Approved
		PARAMOUNT COMMUNICATIONS LTD, NEW DELHI	Approved
		SPECIAL CABLES PVT. LTD., NEW DELHI	Approved
		SRIRAM CABLES PVT. LTD., NEW DELHI	Not Acceptable
		GEMSCAB INDUSTRIES LTD., NEW DELHI	Not Acceptable
		SUYOG ELECTRICALS LTD, VADODARA, GUJARAT	Not Acceptable
		ELKAY TELELINKS LIMITED, FARIBADAB, HARYANA	Approved
		RAVIN CABLES LTD, MUMBAI, MAHARASTRA	Not Acceptable
		ASSOCIATED CABLES PVT LTD., MUMBAI, MAHARASTRA	Not Acceptable
15	Diesel Engine	Greaves Cotton (R&H) - Pune	Approved
		Cummins- Kothrud / Viman Nagpur	Approved
		Caterpillar - USA	Approved
		Ashok Leyland - Chennai (For booster Pump)	Approved
		KOEL - Pune (For booster pump)	Approved

Chief Engineer
Thermal Projects Construction
TSGENCO, Vidyut Soudha,
Khairatabad, Hyderabad-82

LOCAL CONTROL PANEL FOR DIESEL ENGINE/DELUGE VALVE	I	JASPER	GURGAON	A
		KMG A TOZ	NOIDA	A
		C & S	NOIDA/ HARIDWAR	A
		ICA	MUMBAI	A
		ISC	MUMBAI	A
		PYROTECH	UDAIPUR	A
		ANAND CONTROL	NOIDA	A
		VIDUT CONTROL	GHAZIABAD	A
		VENUS	MUMBAI	A
Battery	III	AMARRAJA	TIRUPATI	NOTED
		EXIDE	KOLKATTA	NOTED
		HBL POWER SYSTEM	HYDERABAD	NOTED

CABLE GLANDS (WEATHER PROOF/EX.PROOF)	UNITED AGRO ENGINEERING PVT. LTD.
CABLE GLANDS (WEATHER PROOF/EX.PROOF)	FLEXPRO ELECTRICALS PVT. LTD.,
CABLE GLANDS (WEATHER PROOF/EX.PROOF)	FCG POWER INDUSTRIES
CABLE GLANDS (WEATHER PROOF/EX.PROOF)	PROMPT ENGINEERING WORKS, MUMBAI
CABLE GLANDS (WEATHER PROOF/EX.PROOF)	FLAMEPROOF EQUIPMENTS PVT.LTD.
CABLE GLANDS (WEATHER PROOF/EX.PROOF)	FCG FLAMEPROOF CONTROL GEARS
CABLE GLANDS (WEATHER PROOF/EX.PROOF)	ELECTROMAC INDUSTRIES

CABLE LUGS & CRIMPING TOOLS	AUTOMIC ELECTRIC &
CABLE LUGS & CRIMPING TOOLS	CHETNA ENGINEERING CO.
CABLE LUGS & CRIMPING TOOLS	ELECTROMAC INDUSTRIES
CABLE LUGS & CRIMPING TOOLS	FORWARD ENGINEERING INDUSTRIES

ANNEXURE – 13

(Experience Record Proforma)

BHARAT HEAVY ELECTRICALS LIMITED

R.C.PURAM HYDERABAD – 502032

PROJECT ENGINEERING AND SYSTEMS DIVISION

PRE QUALIFICATION CRITERIA

Annexure 13

Experience Record Proforma

Technical Criteria

The bidder shall be an established manufacturer of Vertical Centrifugal design pumps for Fire Protection System & having adequate engineering, manufacturing & testing facilities for pumps confirming to the relevant HIS, IS-1710, IS 5120 Equivalent Standard & Comply with the regulations of Tariff Advisory Committee (TAC) of Insurance Companies of India / LPA India / NFPA USA. Any other International Standard having equivalent stringent codes may also be considered. However, the system shall be approved by statutory authorities. The pump model offered shall be from the existing regular manufacturing range of bidder.

The offered pump model shall meet the minimum service & manufacturing experience specified as below:

Bidder should have engineered, manufactured, tested, supplied and commissioned at least Five (5) nos. of identical or similar packages (or higher capacity packages) in terms of Flow, Differential Pressure, Material of construction, Column length, speed etc in the last ´7 years and at least Two (2) of these pumps shall have commissioned and kept in trouble free operatıons for the past 2 years as on the bid due date. Vendor to give documentary evidence for the same.

Bidders shall furnish the details as per the below mentioned table along with technical offer for assessment of Bidder with reference to PQC indicated as above.

S.no	Name of Customer	Service	Quantity	Flow (M3/HR)	Differential Head(MLC)	Speed (RPM)	Material of construction	Order ref no & date (copy to be enclosed)	Performance certificate/ Inspection Report/ Dispatch Clearance to be enclosed

---

ANNEXURE – 14

(Deviation Schedule)

DEVIATION SCHEDULE TECHNICAL

Bidder are requested to mark "✓" as applicable

☐ **No Deviation required**

☐ **Deviation required**

List of deviations (expectations and /or addition requested by Bidder) from specification, standards and /or drawing etc.

Sl. No.	Section / Part/Subsection	Page No.	Clause No.	Bid Specification	Bidder's Query	Purchaser's Reply

Note: Bidder to furnish this duly filled format along with SEAL & SIGN at pre-bid stage only and any deviations appearing elsewhere shall not be considered.

SIGNATURE : _____

NAME : _____

DESIGNATION : _____

COMPANY : _____

DATE : _____

COMPANY SEAL

ANNEXURE – 15

(Pre Bid Clarification Format)

DEVIATION SCHEDULE TECHNICAL

Bidder are requested to mark "✓" as applicable

☐ **No Deviation required**

☐ **Deviation required**

List of deviations (expectations and /or addition requested by Bidder) from specification, standards and /or drawing etc.

Sl. No.	Section / Part/Subsection	Page No.	Clause No.	Bid Specification	Bidder's Query	Purchaser's Reply

Note: Bidder to furnish this duly filled format along with SEAL & SIGN at pre-bid stage only and any deviations appearing elsewhere shall not be considered.

SIGNATURE : _____

NAME : _____

DESIGNATION : _____

COMPANY : _____

DATE : _____

COMPANY SEAL

ANNEXURE – 16

(Master Document List)

MASTER DOCUMENT LIST - Hydrant-Spray Pump: Motor & Diesel Engine driven

	Vendor Name:				PROJECT:											Supplier Doc- No:								
	Vendor Contact Person:				BHEL PO No.		PO date:			PO Dly. Date:						Rev- No.								
	Vendor contact No.				Supplier's Job No.											Date:								
	SYSTEM/PACKAGE:	Hydrant Pump				TODAY-DATE	10/May/17			Sumission status to BHEL														
Sl.No	DRG/DOC. NAME	DRG/ DOC NO.	NO. OF SHTS.	CAT	CRITICAL FOR MFG?	REQD.FOR CUSTOMER SUBMISSION?	Plan date of submission	Count of DUE as on Dt.	STATUS	Rev-0			Rev-1			Rev-2			Rev-3			Rev-4		
			NO.	(A / I)	(Y/N)	(Y/N)	dd-mmm-yyyy		" "/PV/PB /PC/AA	SD	AD	APP.CAT	SD	AD	APP.CAT	SD	AD	APP.CAT	SD	AD	APP.CAT	SD	AD	APP.CAT
1.0 Mechanical																								
A	MECHANICAL																							
1	Pump Data Sheet -Engine & Motor Driven			A	Y	Y																		
2	Pump Performance curve-Motor Driven			I	Y	Y																		
3	Pump Performance curve-Engine Driven			I	Y	Y																		
4	Pump & Motor assembly GA drawing			A	Y	Y																		
5	Pump & Engine assembly GA drawing			A	Y	Y																		
6	Pump Cross Sectional Drawing			I	Y	N																		
7	Motor Data Sheet			A	Y	Y																		
8	Motor GA drawing			A	Y	Y																		
9	Motor Curves			I	Y	Y																		
10	T-S Curve			I	N	N																		
11	Diesel engine GA Drawing			A	Y	N																		
12	Diesel engine Data Sheet			A	Y	Y																		
13	Control Panel GA Drawing & Wiring Diagram			A	Y	Y																		
14	Battery Charger & Battery Data Sheet			A	Y	Y																		
15	Fuel tank Drawing			A	Y	N																		
16	P&ID/Schematic of Diesel Engine			I	N	N																		
17	Coupling GA Drawing for Motor Driven Pump			I	Y	N																		
18	Coupling GA Drawing for Engine Driven Pump			I	Y	N																		
19	Mechanical Seal GA Drawing and details			I	Y	N																		
B	INSTRUMENTTAION																							
1	Data Sheet of Level Switch			I	N	N																		
2	Datasheet of Motor Bearing & Winding RTDs			I	N	N																		
3	Datasheet of Motor Bearing TGs			I	N	N																		
4	Data Sheet of Level Gauge			I	N	N																		
5	Data Sheet of Junction Box			I	N	N																		
6	GAD of Junction Box			I	N	N																		
C	MISCELLANEOUS																							
1	Performance Test Procedure			A	Y	N																		
2	NPSH test procedure			I	N	N																		
3	Vibration test procedure			I	N	N																		
4	Temperature rise test procedure			I	N	N																		
5	Hydro Test Procedure			I	N	N																		

MASTER DOCUMENT LIST - Hydrant-Spray Pump: Motor & Diesel Engine driven

	Vendor Name:				PROJECT:											Supplier Doc- No:								
	Vendor Contact Person:				BHEL PO No.		PO date:			PO Dly. Date:						Rev- No.								
	Vendor contact No.				Supplier's Job No.											Date:								
	SYSTEM/PACKAGE:	Hydrant Pump				TODAY-DATE	10/May/17			Sumission status to BHEL														
Sl.No	DRG/DOC. NAME	DRG/ DOC NO.	NO. OF SHTS.	CAT	CRITICAL FOR MFG?	REQD.FOR CUSTOMER SUBMISSION?	Plan date of submission	Count of DUE as on Dt.	STATUS	Rev-0			Rev-1			Rev-2			Rev-3			Rev-4		
			NO.	(A / I)	(Y/N)	(Y/N)	dd-mmm-yyyy		" "/PV/PB /PC/AA	SD	AD	APP.CAT	SD	AD	APP.CAT	SD	AD	APP.CAT	SD	AD	APP.CAT	SD	AD	APP.CAT
6	NDE Test Procedure			I	N	N																		
7	Balancing_LP test & ultrasonic test procedure			I	N	N																		
8	Painting proccedure			A	N	N																		
9	Packing List			I	N	N																		
10	BILL OF MATERIAL			A	N	N																		
11	BILLING BREAKUP			A	N	N																		
12	QUALITY ASSURANCE PLAN			A	N	Y																		
13	SUB VENDOR LIST			I	N	N																		
14	COMMISSIONING SPARES LIST			A	N	N																		
15	Mandatory Spares List			A	N	N																		
16	LUBE OIL SCHEDULE			I	N	N																		
17	STARTUP PROCEDURE			I	N	N																		
18	ERECTION PROCEDURE & Comissioing procedure			I	N	N																		
19	INSPECTION/TESTS REPORTS/CERTIFICATE			I	N	N																		
20	O& M Manuals(Soft Copies)			A	N	N																		
21	O& M Manuals(Hard Copies)** ** hard copy shall be furnished after getting concurrence on soft copy.			I	N	N																		
							TOTAL	0		^APP.CAT														
	A-Approval Category	PV-Commented and pending with vendor					TOTAL "PV"		0	A1-'Approved									Approved By:					
	I-Information Category	PB- Pending with BHEL					TOTAL "PB"		0	A2-'Mfg. Clearance given subject incorporation of comments									Sign :					
		PC- Pending with Customer					TOTAL "PC"		0	A3-Commented.Revision & resubmission required.														
		AA- Approved					TOTAL "AA"		0	A4- Retained for info.									Date :					
		OD-Overdue					TOTAL "OD"		0															
		" " - Not yet Due.							5															

Vendor documentation status									
Total No of Docs	Due as on Date	Submitted by vendor as on Dt.	Approved by BHEL as on Dt.	Commented by BHEL as on Dt.	Pending with BHEL/CUSTOMER as on date	%age of Dos Approved	%age of critical Dos Approved	Is Mfg. Clearance given?	Status/ Remarks
(Nos)	(Nos)	(Nos)	(Nos)	(Nos)	(Nos)	% age	% age	(Y/N)./ (If Y) put Dt.	
0	0	0	0	0	0	#DIV/0!	0.00%	Y	

ANNEXURE – 17

(C&I Specification)

VOLUME: VI

SECTION-I

GENERAL TECHNICAL REQUIREMENTS

CONTENT

1.00.00 INTENT OF SPECIFICATION
2.00.00 GENERAL PERFORMANCE REQUIREMENT
3.00.00 GENERAL DESIGN REQUIREMENTS
4.00.00 GENERAL TECHNICAL REQUIREMENTS
5.00.00 CODES AND STANDARDS
6.00.00 DESIGN CRITERIA
7.00.00 METERING BASES AND CHART UNITS
8.00.00 PROCESS CONNECTION & INSTRUMENT HOOK UP
9.00.00 POWER SUPPLY SYSTEMS
10.00.00 ENVIRONMENTAL CONSIDERATIONS
11.00.00 SECURITY
12.00.00 ACCEPTANCE TESTS

1.00.00 **INTENT OF SPECIFICATION**

1.01.00 This part of the specification is intended to provide the technical guidelines for the fully coordinated Control & Instrumentation system with auxiliaries and accessories for the 1 x 800 MW Stage VII , Unit # 12 Kothagudem Thermal Power Station for Telangana State Power Generaton Corporation Ltd. (TSGENGO)..The duty of services specified below and in other drawings and documents forming part of this specification are considered required for safe, reliable, trouble free and efficient operation with adequate maintenance facilities as per modern power station practice and as per terms and conditions enumerated in this specification.

1.02.00 The technical specifications that follow serve as the guide specification for the entire C&I as well as the proprietary controls like SG & its integral controls, TG set & its integral controls etc. supplied as part of equipment packages within the contract and also various standalone system controls to be supplied as part of BOP /Offsite plant sub-packages. Interfaces with other external / existing plant systems have also been addressed.

1.03.00 In conformity with the guidelines provided in the specification, the scope of works shall completely cover all the Control & Instrumentation equipment, functions, activities and documentation specified under the accompanying Technical Specifications and shall not be limited to the following:

a) Detailed design and engineering of the manufactured equipment; system integration and system engineering.

b) Complete manufacture including shop testing before shipment.

c) Specifying, procurement, quality inspection of bought-out items from sub-suppliers. Design co-ordination for and integration with bought-out items with sub - suppliers.

d) Coordination, integration & interfaces between the Bidder's C&I systems and various proprietary , plant auxiliary control systems , C&I systems for BOP/Offsite packages such as, Coal Handling , Ash Handling , Water Treatment plant, Hydrogen Generation Plant , Effluent Treatment Plant Mill reject handling system, Fire protection and detection system, Condensate polishing unit , Compressed air system, Heating Ventilation & Airconditioning unit , Steam and Water Analysis System , Continuous emission monitoring System , Station Electrical system, Switchyard etc., Owner's central load dispatch centre , other third party / existing unit C& I systems for co ordinated operation and centralized monitoring & limited control.

e) Providing engineering drawings, documents, licensed copy of software and developmental tools, data, instruction, operation and maintenance manual etc. for Owner's review/ approval / record.

f) Arranging for Owner's inspection and testing of manufactured as well as bought-out items at the respective works.

g) Packaging and transportation of instruments, equipment, accessories and erection hardware from the manufacturer's works to the site, including transit insurance.

h) Opening of site office at location provided by Owner.

i) Receipt, storage, preservation of instruments, equipments and erection hardware at the site.DDCMIS and all electronic cabinets shall be kept in the Air conditioning area.

j) Fabrication of site-constructed items.

k) Pre-assembly (if any), erection, testing and commissioning of all the equipment and instruments supplied, in totality.

l) Performing availability tests and Performance and Guarantee tests.

m) Prepare and submit approved & as-built drawings and documents in hard and soft copies.

n) Furnishing of spares, tools and tackle and test instruments.

o) Fulfilling post-commissioning liabilities.

p) Arranging for the training of Owner's personnel of different categories at manufacturer's works as well as plant site.

q) Other activities detailed in subsequent sections of the Specification.

r) Any other activity, not mentioned explicitly, but felt essential by Bidder for successful completion of work.

1.04.00 The requirements enumerated in this specification are qualitative in nature and are based on typical configuration of the plant for the purpose of bidding. It shall be the responsibility of Bidder to offer Control & Instrumentation system to meet the actual functional requirements of the plant offered.

1.05.00 The Control and Instrumentation shall be based on state of art microprocessor based Distributed Digital Control and Management Information System (DDCMIS) for the entire main plant covering the total functional requirements of modulating control, sequence control, interlocks & protection, monitoring, alarm, data logging, fault analysis, performance calculation & optimization, maintenance scheduling & machine monitoring & analysis etc. Complete operation and control of Steam Generator, Turbine Generator, Station, unit and Electrical system including metering and auxiliary systems shall be carried out from DDCMIS from a Central Control Room (CCR).

Automatic powerplant control(APC) nd Automatic Burner Control System (ABS) shall be included. Single command operation for automatic startup and shutdown of the plant shall be established.

1.06.00 The control room operator shall be provided with color-graphic displays of the power plant equipment through Large Video screens and TFT monitors; DDCMIS Driven Hardwired Annunciation windows shall be provided on the Unit Control Panel (UCP) cum Backup panel to be located in CCR. In addition, hardwired push button stations will be provided on UCP to ensure fast and reliable tripping of the unit and major auxiliaries in case of emergency. Any other back up instruments for safe shutdown, if any recommended, shall

also be installed on the UCP. Start pushbuttons for some crtical drives on UCP shall also be provided.These drives shall be finalized during detailed engineering.

Soft alarm windows shall also made available and shall be same as it is available on UCP and shall be made in graphic pages. These alarm windows shall pop up the concerned inputs of alarm once operator clicks each window.The color of the latest window shall be such that the operator shall be able to discriminate,

1.07.00 PLC / microprocessor based standalone control and monitoring systems shall be provided for offsite packages .Opeartor workstations & Back up control panels / desks shall be located in local control room as operator interface . Also suitable servers / soft links (OPC) and time synchronization including all required software & hardware shall be provided for all PLC / microprocessor-based offsite packages for interfacing with plant Master Clock System (MCS) and DDCMIS for monitoring and limited control. Separate OPC server shall be provided for off-site PLCs to export the plant data to MIS / ERP requirement.

1.08.00 All OPC links shall be redundant bidirectional and HAD (Historical Data Access) - AE (Alarms and Events) based. In general all softlinks shall be dual redundant.

1.09.00 It is not the intent to completely specify the details of design and construction features herein. Nevertheless, the instruments / equipment and their installation shall conform to high standards of engineering design and workmanship in all respects.

1.10.00 In the event of conflict between requirements of any two clauses of this specification / documents or requirements of different codes / standards specified, the more stringent requirements as per the interpretation of the Owner shall apply.

2.00.00 **GENERAL PERFORMANCE REQUIREMENT**

2.01.00 Control & Instrumentaion equipment shall be guaranteed to meet the performance, functional and accuracy requirements enumerated in the specification.

2.02.00 Control & Instrumentation equipment shall be guaranteed against manufacturing defect for at least two (2) years from the date of handing over to Owner.

2.03.00 The guaranteed performance criteria shall be met in full during the guarantee period.

2.04.00 Any predictable or planned deterioration and / or obsolescence of equipment shall be clearly brought out in the Bid.

2.05.00 Control & Instrumentation equipment shall be capable of maintaining the specified performance and accuracy standard over the complete regime of operation of main equipment, taking into account the excursion of parameters during emergency or malfunction of main equipment.

2.06.00 In the event of loss of a major plant equipment, controls shall be coordinated to ensure that the plant is automatically brought to a safe holding condition consistent with maintaining maximum safe generation permissible under reduced plant availability.

2.07.00 Control & Instrumentation system shall not impose any limitation or constraint on the operation of the main equipment. It shall be possible to utilize any in-built over capacity in design of an equipment with complete controllability and observability.

2.08.00 The control system shall be designed to prevent abnormal swings due to loss of control power, instrument air, failure of any system component, open/short circuits or any other such failure or degradation in the system and shall drive the plant and equipment to fail safe condition.

2.09.00 All modulating devices shall be in stay put condition during any of the above failures if not otherwise asked in the control philosophy.

2.10.00 Mean Time Between Failure (MTBF) of the instruments shall be considerably higher than the equipment they shall cater to in order to avoid shutdown on account of instrumentation failure.

2.11.00 Bidder shall introduce redundant control equipment or instruments wherever it is felt that the introduction of the same may lead to reduction of downtime of plant and equipment, in addition to the cases clearly identified in the specification.

2.12.00 In cases where continuous monitoring of performance of equipment is envisaged, Bidder shall supply instruments of suitable accuracy class to meet the accuracy requirements of the calculation as per ASME standard.

2.13.00 All instruments and control equipment shall ensure high reliability, low downtime and ease of maintenance.

2.14.00 Protective systems and their safety features shall be guaranteed to ensure the main equipment safety in the event of tripping, maloperation and malfunction.

2.15.00 The performance guarantee shall be on complete system basis as well as on the basis of isolated, individual instrument or component.

2.16.00 Bidder shall replace all instruments failing to meet the performance stipulations of the specification at any stage of the project.

2.17.00 All instruments / equipment shall be capable of performing satisfactorily in continuous commercial operation conforming to all relevant codes and regulatory requirement under the specified environmental conditions.

2.18.00 In general, equipment located in air condition environment shall be capable of operating without any degradation of performance or damage for at least twelve (12) hours to keep the plant in running condition in case failure of air conditioning units. For any equipment or component that cannot conform to this requirement, Bidder shall consider back-up packaged split type air conditioning unit/s.

2.19.00 Trial Operation

The trial operation shall be conducted by Bidder as per the stipulation of this specification which shall be witnessed and signed off by Owner.

2.20.00 Performance and guarantee test

Bidder shall perform the tests for performance and guarantee as per the stipulations of this specification.

2.21.00 Performance and Guarantee Test Procedure

Bidder shall perform the tests for performance and guarantee as per the stipulations of the specification

Bidder shall guarantee that the Control System shall be responsive and stable and shall maintain the deviation of controlled variables from set point within the limits specified in the specification. Bidder shall operate the unit fully in automatic mode with no intervention from the operator. Bidder shall successfully demonstrate the performance of the Control Systems as per attached table before acceptance and taking over by Owner.

2.22.00 Total System Availability

Bidder shall guarantee the total system availability of 99.7% by selecting suitable components and by judicious incorporation of redundancies.

3.00.00 **GENERAL DESIGN REQUIREMENTS**

3.01.00 Equipment and system shall be designed and constructed to perform accurately and safely under the environmental and operating conditions described or implied in this specification without undue heating, vibration, wear, corrosion.

3.02.00 Equipment and systems shall be supplied from latest proven product range of reputed experienced manufacturer whose successful performance has been established by a considerable record of satisfactory operation in large capacity coal fired thermal power stations. Bidder shall obtain Owner's approval for the selected manufacturers for critical items.

3.03.00 The equipment, systems and accessories furnished shall be designed and constructed to meet the all specification requirements and performance specification during the continuous service life of the plant. Equipment or components that cannot meet these requirements shall be identified in the Bid and their expected failure rate be indicated. Otherwise, it shall be deemed that the equipment or components are suitable for the service life of the entire plant.

3.04.00 Bidder shall indicate the year in which the offered models of the instruments and control system have been introduced and how long the commercial production of the same is expected to continue. In any case, Bidder shall ensure supply of spare parts for lifetime of the plant. In case if it is felt by Bidder that certain equipment/components is likely to become obsolete, Bidder shall clearly bring it to the notice of Owner and indicate step proposed to deal with such obsolescence like maintaining "bonded spares" with the manufacturer/s.

3.05.00 Any part/module of the C&I system which are not listed under recommended spares shall be deemed as having life expectancy not less than the expected life of the plant i.e. 30 years.

3.06.00 Bidder shall supply proven latest version of hardware and software available at the time of system designing. All software user licenses shall be valid for entire life of power plant. User should not have to pay any recurring license fee during the usage period of the system. In case of future up-gradation of software, Bidder shall remain committed to upgrade the supplied system at per with the new version within the warranty period and ensure successful integration of the system without any additional cost to owner. Beyond the warranty period and during the remaining life of the plant, any upgradation in hardware and software shall be brought to the notice of Owner indicating whether it shall be possible to upgrade the system by partially replacing,

3.07.00 All C&I equipment like field instruments eg. transmitters, switches, positioners etc., shall be of latest models.

3.08.00 For the sake of completeness of the system and in order to ensure desired performance & safety measures, any hardware or software item felt required, shall be in the scope of Bidder irrespective of their explicit or implicit inclusion in this specification .

3.09.00 All the modules of the control and monitoring system including for DDCMIS / PLC / Proprietary control system shall be from latest procuct range and from same family only.

4.00.00 **GENERAL TECHNICAL REQUIREMENTS**

4.01.01 Control & Instrumentation system design will aim at high availability, fuel efficient performance, plant & personnel security and high level of automation with minimum deployment of operational manpower.

4.02.00 Uniformity of make and type of instruments and control components shall be followed throughout for rationalization of spares' inventory, except for certain proprietary items where this requirement can not be met. Bidder shall , however take the Owner's approval on the make and type during detailed engineering for such proprietary items .

4.03.00 In general, the plant operation shall not depend on local measurement or local manual operation.

4.04.00 Suggestive Plant Control System Overview Diagram for the DDCMIS is schematically shown in Drawing No. 13A06-DWG-I-0001.

4.05.00 Transmitters shall be SMART type and of unform make . Each SMART equipment shall communicate in the form of analog signal 4-20 mA DC with superimposed digital signal, zero adjustment, calibration and diagnostic from remote location. One no. HART portable communicator for each offsite package and five nos. for BTG and auxiliaries shall be supplied.

In general transmitters shall be used instead of switches.

4.06.00 Power supply for Transmitters, contact interrogation, interposing relay and solenoid shall generally be ungrounded 24V D.C only. Power supplies for

interrogation, relay and solenoid shall be provided from the control systems viz. DDCMIS , PLC , proprietary control systems . In all cases redundancy in power modules shall be considered.

4.07.00 When more than one device utilizes the same signal, the signal source shall meet such signal requirement and with proper isolation and without overloading. Short circuiting or grounding of one device shall not have any perceptible influence on any other consumer point nor shall change the transmitter calibration.

4.08.00 Final control device for regulating control shall have pneumatic actuator. Actuators for isolating and inching duty dampers and valves shall be, in general, electrical motor operated. Critical service valves like PRDS , HP/LP bypass , BFP recirculation , Boiler feed control , SH/RH steam temperature , Sootblower pressure control valves shall be of DRAG design with Class VI leakage class. Control valves for HP & LP bypass system , Separator drain control MEFCV shall be hydraulically operated. SMART positioner along with position transmitter (4 - 20 mA output) and limit switches shall be provided for all types of control valves & pneumatic dampers . Hydraulic operated control valves shall also be operated from DDCMIS in addtion to the local control and all the operation parameters for hydralic system shall also to be developed in the DDCMIS with all IOs.

4.09.00 Electronics located outside control room areas shall be tropicalized and enclosed in dust & weatherproof cabinets suitable for the environment.

4.10.00 Local instruments shall be provided in cases where these are required for maintenance, commissioning and recommissioning of major equipment or for calibration and setting of other instruments and for equipment safety. All equipment like field instruments like transmitters, switches, positioners etc., shall be of latest models

4.11.00 In general, instruments installed outdoors and in areas where these may be exposed to Heat , Dust , splashing oil, water, steam etc. shall be mounted in closed type enclosures. For other areas (indoor), open type racks may be used.

4.12.00 Drain from instrument rack/enclosure shall be routed to nearby plant drainage system.

Temperature measurement shall have up scale / down scale drive to protect from process upset in case of sensor failure. Both the elements of duplex temperature sensors shall be terminated to junction boxes. For RTDs ring - tong type lugs shall be used at Junction Boxes ,especially for motor winding temp JB, Motor bearing temperature JB at both motor end and at field local JB end.

4.13.00 In general, for temperature measurements up to 300°C, Platinum resistance temperature detectors shall be used unless the area is prone to vibration. For temperature measurement above 300°C up to 750°C, Chromel-Alumel (K) type thermocouple shall be used. For high temperature applications, noble-

metal thermocouple (TC) such as Pt Rh-Pt (R) type in inconel sheathed thermowell shall be used. For lower temperature with vibration prone areas Iron Constantan (J) / Chromel constantan (E) type thermocouples shall be used .

4.14.00 Temperature elements shall be in sheath tube and in thermowells of suitable material. Thermowell made of Tungsten carbide shall be used for highly abrasion application. In all flue gas path , thermo wells shall be provided with protecting semicircular SS pipe to protect against erosion

4.15.00 Temperature elements shall be directly connected to their respective input modules through compensating cables. For Boiler Metal temperature measurement Remote I/O or for bulk data acquisition shall be provided for monitoring in DDCMIS.

4.16.00 In general, temperature switching function shall be configured by use of temperature elements and software configured limit value monitors instead of using conventional field mounted temperature switch.

4.17.00 The instruments and control equipment shall be logically grouped in electronic cabinets in functional order for convenient fault location, troubleshooting and maintenance.

4.18.00 Equipment and devices, which require maintenance, shall be suitably located to ensure easy accessibility.

4.19.00 On-line automatic periodic testing, self-checking & diagnostic facility shall be provided with fault indication for easy identification of the faulty module. The system shall continuously check health of the component elements including the stand-by ones and shall permit carrying out of the on-line checks while maintaining safe condition of the plant without endangering the safety of equipment and without influencing the process being controlled.

4.20.00 Failure of equipment used for alarm & trip purposes shall initiate alarm.

4.21.00 Automatic unadministered switchover to standby equipment (such as fan /blower /pump) is foreseen in case of either running equipment is not adequate to maintain the desired process condition or due to tripping of running equipment.

4.22.00 End positions of manually operated suction valves of critical pumps and all other manual operated critical isolation valves shall be monitored & interlocked.

4.23.00 In case of HT motors, winding temperature for each stator winding and bearing temperature of motors & driven equipment shall be monitored for abnormal rise. For monitoring of such temperature in a local panel where no operator station has been provided suitable electronic display device driven by output of DDCMIS / PLC system shall be provided.

4.24.00 Microprocessor based Vibration monitoring and analysis system (VMAS) shall be provided for all HT drives including SG,STG and all BOP drives..

4.25.00 Electrical drives rated at 30 KW or more and for crital drives including all lub oil pumps, fuel oil pumps current rated at less than 30 KW shall be monitored for current in DDCMIS.

4.26.00 Process fluids shall not be piped directly in to Central Control Room (CCR) and Electronicl Equipment Room (EER) areas.

4.27.00 Ergonomically & aesthetically designed furniture viz. control desks & chairs shall be provided for workstations, programming stations, PCs and various peripherals at control room/computer room/equipment room. Furniture shall include documentation racks, tables for laydown etc.

4.28.00 KKS identification system shall be adopted consistent with the plant equipment numbering system.

4.29.00 Steam Generator (SG) Integral Control and Monitoring

4.29.01 Steam Generator (SG) Integral Control shall be synthesized from the same family of hardware as the DDCMIS through redundant controllers and shall integrate seamlessly.

4.29.02 Major Boiler interlock and protections like Burner Management System (BMS) / Furnace safeguard and supervisory system (FSSS) including safety related interlock and protections , Master fuel Trip (MFT) shall be of triple-modular redundant (I/Os and controllers) configurations and shall be part of DDCMIS . Hardwares related to this system shall be housed in a distinctly separate cabinet set. All trip and interlocking inputs shall be hardwired.

4.29.03 HP bypass control , Secondary Air Damper (SADC), Soot Blower Control and other controls shall be implemented in the DDCMIS.

4.30.00 Turbo Generator (TG) Integral Control and Monitoring

4.30.01 This shall include controls and protective trips functions like Electro Hydraulic Governor (EHG) control, Automatic Turbine Run up System, Automatic Turbine Testing, Turbine Stress Evaluator, Turbine Protective Trip System, Turbine supervisory Instruments, LP Bypass system , Gland Seal Steam System ,Turbine Air Evacuation, TG Cooling water, TG stator coil cooling water, TG H2 / CO2 System, TG Seal Oil system, and Other closed loop & Open loop controls of TG system and auxiliaries related to the integral performance and safety. TG integral Control and Monitoring system shall be implemented in the DDCMIS through redundant controllers . All trip and interlocking inputs shall be hardwired. Safety related interlock and protection functions shall be implemented through two out of three (Triple Modular Redundant - I/Os and controllers) configurations .

4.31.00 Station C&I System

4.31.01 This shall include the control & monitoring of all other balance non-integral functions in SG area, TG area and other Balance of Plant equipment and auxiliaries such as Boiler circulation water, ID fans, FD fans, PA fans, Air preheater, Coordinated master control, Air and flue gas , Blow down , Fuel oil pressurizing pumps, Boiler feed water pumps, Condensate pumps, DM make up pumps, Boiler fill pumps , Condensate transfer pumps, Pressure reducing & de-super heating system , Chemical Dosing , Service /potable , DM water distribution system etc.These shall be implemented through redundant controllers of DDCMIS.

4.31.02 Plant Auxiliaries and Off site Plants Controls

4.31.03 In order to achieve optimum manning of the plant in terms of operating personnel, all auxiliaries like, Generator monitoring and Auxillary Control system , Water system , Effluent Treatment Plant , Mill Reject System, HVAC, Fire Detection and Protection system, DG Set, Swityard SCADA , etc. in addition to their standalone control and monitoring systems , shall also be hooked up to the common DDCMIS network , as detailed in Section V of this volume of this specification ,from the CCR.

4.31.04 CW & ACW pumping system ,Fuel oil system, Filtered water transportation system , DM transportation , Condensate Polishing unit along with regeneration system , Compressed air system along with proprietary control system shall be controlled & operated from DDCMIS workstations as well as from local operator workstations / panels . Remote terminal units shall be provided at appropriate locations for these purpose.

4.31.05 Common DDCMIS nework shall also control and monitor packages envisaged for PLC based local control systems. Operator workstations shall be provided in CCR for the overall control and monitoring through this netework. Such links (OPC) with Common DDCMIS are largely foreseen as Optical Fiber redundant bidirectional data hiways.

4.32.06 ESP controls shall have Control and Monitoring systems in ESP building and shall have interface with DDCMIS for monitoring.

4.32.07 In general no relay based control system is acceptable. These shall be either DDCMIS or PLC based only.

4.32.00 Electrical Drive Control Interface

4.32.01 Electrical drives shall all be operated from DDCMIS. In order to segregate different voltage levels, interposing relays shall be located at the respective Motor Control Centers or Switch Gears. Interposing relays shall be rated at 24 Volt DC driven directly from DDCMIS. Relay contacts shall actuate the drive contactors. Specification drawing no. 13A07- DWG - I - 0231 shall be referred for Drive interface technique with control systems.

4.34.00 Performance Analysis Diagnostics and Optimisation (PADO) System

PADO shall be provided for the plant to enhance operational efficiency

4.35.01 Electrical Distribution and Management System (EDMS)

4.35.02 The entire unit and station electrical system within power house area shall be monitored and operated from DDCMIS. For detail requirements , Electrical part of the specification Volume IIF shall be referred.

4.36.00 Master Clock System (MCS)

4.36.01 GPS based Master Clock System shall be for time synchronization of DDCMIS , PLC based and proprietary control systems

4.37.00 Steam and Water Analysis System (SWAS)

Continuous analysis shall be done for steam and water services to establish their purity and suitability for long life of different parts of the unit . The measurements shall be carried out at different cycle points of the plant The steam and water analysis system (SWAS) includes all requisite analyzers, sampling system. All data shall be available available in DDCMIS for information.

4.38.00 Alarm Annunciation System

Microprocessor based Annunciation system with windows / facia shall be provided for critical services on UCP in CCR. The annunciation sequence logic will be implemented in DDCMIS / PLC and the annunciation lamps shall be driven by DDCMIS / PLC.

4.39.00 Rotating Machine Condition Monitoring & AnalysisSystem (RMCMAS) including analysis system.

Continuous monitoring and analysis of the mechanical health of rotating equipment viz, Turbine, Generator & Exciter, BFP drive turbine & pump and all HT motors & their driven equipment shall be performed by proven and state of the art microprocessor based RMCMAS . RMCMAS for TG and HT motor & their driven equipment shall be same and of same family of hardware of Turbine Supervisory Instruments (TSI) / systems and HT drives Vibration Monitoring System .

4.40.00 Close Circuit Television (CCTV) System and Furnace & Flame monitoring System

The CCTV system shall be able to provide surveillance of different locations of the plant.

The cameras for furnace and flame monitoring system shall be provided for on line continuous viewing in CCR of the coal / oil flame as well as the condition of furnace internals.

4.41.00 EPABX , PA and Paging System

EPABX system shall be provided for establishing point to point communication amongst offices / plant areas. PA and Paging system shall be meant for public announcement and talk back systems amongst various locations within the plant.

4.42.00 Computerised Maintenance & Inventory Management System (CMIMS)

The system shall have capabilities to document maintenance related functions and shall streamline the entire maintenance activities.

4.43.00 Ambient Air Quality Monitoring System (AAQMS)

This online monitoring system shall be provided to monitor the ambient air and Meteorological Monitoring Parameters .

4.44.00 C&I Laboratory

One state of the art C&I laboratory shall be provided for the day-to-day maintenance / testing and calibration of the C&I equipment of the plant

4.45.00 Local Instruments , Flow Elements and Control Valves

Required local instruments including gauge boards, etc. and Flow Elements , Control valves shall be provided for safe and efficient operation of the plant. .

4.46.00 Erection Hardware

Standard and good engineering practice of international standard shall be adopted throughout. All materials supplied shall be suitable for tropical, dust laden, humid power plant environment and shall be from reputed manufacture.

4.47.00 C&I Cabling

Instrumentation cables shall be copper, overall screened for binary signals and individual pair and overall screened for analog signals. All cables shall be FRLS type (inner and outer sheath) ,armored, other than short run cables which may be unarmored. Unarmored cables shall run through conduits.

C&I cable type shall also include FO , Prefab , Coaxial , compensating cable , special cable etc

The screen shall be grounded at the remote panel end at control / equipment room only.

5.00.00 CODES AND STANDARDS

The design, manufacture, inspection, testing, site calibration and installation of all C&I equipment and systems covered under this specification shall conform to the latest editions of applicable codes and standards eg. ANSI, ASME, IEEE, ISO, IEC, IGCI, AWS, NFPA, AISC, IGS, SAMA, UBC, UL, NESC, NEMA, ISA, DIN, VDE , IS etc. Generally, the following latest edition of codes and standards prevailing at the time of award of contract shall be applicable.

1) Temperature Measurement

   a) Instrument and apparatus for temperature measurement - ASME PTC 19.3 (1974).

   b) Temperature Measurement - Thermocouples - ANSI - MC 96.1 - 1982.

   c) Temperature Measurement by electrical resistance thermometers - IS: 2806

   d) Thermometer-element-Platinum resistance - IS: 2848 / DIN 43760.

2) Pressure Measurement

   a) Instrument and apparatus for pressure measurement - ASME PTC 19.2 (1964).

   b) Bourdon tube pressure and vacuum gauges - IS: 3624/1996.

3) Flow Measurement

   a) Instruments and apparatus for flow measurement - ASME PTC 19.5 (1972) Interim supplement, Part-II

   b) Measurements of fluid flow in closed conduit - BS 1042.

4) Electronic Measuring Instruments and Control Hardware

   a) Automatic null balancing electrical measuring instruments -ANSI C 39.4 (Rev. 1973), IS 9319

   b) Safety requirements for electrical and electronic measuring and controlling instrumentation - ANSI C 39.5 / 1974.

   c) Compatibility of analog signals for electronic industrial process instruments - ISA-S 50.1: ANSI MC 12.1 / 1975.

   d) Dynamic response testing of process control instrumentation - ANSI MC 4.1 (1975) - ISA -S26 (1968).

   e) Surge withstand capability (SWC) tests - ANSI C 37.90A (1989), IEC-255.4.

   f) Printed circuit boards - IPC TM-650, IEC 326C.

   g) General requirements and tests for printed wiring boards - IS-7405 (Part-I)/1973.

   h) Edge socket connectors - IEC 130-11.

   i) Requirements and methods of testing of wire wrap terminations--DIN 41611 Part-2.

   j) Dimensions of attachment plugs and receptacles- ANSI C73-1973.(Supplement ANSI C73a – 1980)

   k) Direct Acting Electrical Indicating Instruments - IS - 1248 - 1968

5) Instrument Switches and Contacts

   a) Contact Rating - AC services NEMA ICS Part-2 125, A-600

   b) Contact Rating - DC services NEMA ICS Part-2 125, N-600

6) Enclosures

   a) Enclosures for Industrial Controls and Systems–NEMA ICS-6-110.15 through 110.22

   b) Racks, panels and associated equipment -EIA: RS-310-B-1983 (ANSI C83.9 - 1972) / IEC 60947 / IEC 60529

   c) Protection Class for Enclosures , Cabinets Control Panels and Desks - IS 2147 1962

7) Apparatus, Enclosures and Installation Practices in Hazardous Area

   a) Classification of hazardous area - NEMA Article 500, Volume-6, 1978./ NFPA Article 500 , Vol.70-1984

   b) Electrical Instruments in hazardous dust locations - ISA-RP 12.11.

   c) Intrinsically safe apparatus - NFPA Article 493 Volume-4 1978.

   d) Purged and pressurized enclosure for electrical equipment in hazardous location - NFPA Article 496 Volume-4, 1982.

8) Sampling System

   a) Stainless Steel material of tubing and valves, for sampling system - ASTM A 269-79 GRTO-316.

   b) Submerged helical coil heat exchangers for sample coolers -- ASTM D11-98.

   c) Steam and water sampling ,conditioning and analysis in the power cycle - ASME PTC - 19.11

   d) Standard methods of sampling system - ASTM D 1066-69

9) Annunciators

   a) Specifications and guides for the use of general-purpose annunciators - ISA RP 18.1.

   b) Surge withstand capability tests -ANSI C37.90 a -1971 and IEEE Standard 472-1974.

10) Interlocks, Protections

   a) Relays and relay system associated with electric power apparatus - IEEE Standards 3.13.

   b) Surge withstand capability tests - ANSI C37.90 a - 1971 and IEEE Standard 472-1974.

   c) General requirements and tests for switching devices for control and auxiliary circuits including contactor relays - IS-6875 (Part-I)/1973.

   d) Turbine water damage prevention - ASME-TDP-1-1980.

   e) Boiler safety interlocks - NFPA Section 85B, 85D, 85E, 85F, 85G.

   f) Installation and operation of Pulverized fuel system - ANSI / NFPA 8503

   g) Functional diagramming of Instrument and control systems - SAMA PMS 22.1

   h) Digital interface for programmable instrumentation - ANSI / IEEE 488

11) Control Valves

a) Control valve sizing (Incompressible fluids) - ISA-S39.2 / 1972.

b) Control valve sizing (Compressible fluids) - ISA-S39.4 / 1972.

c) Control Valve seat leakage – ANSI / FCI 70.2

d) Face to face dimensions of Control Valves - ANSI B16.10

e) Control Valve Capacity Test Procedure – ISA – S75.02

12) Process connection Piping and Tubing

a) Seamless Carbon Steel Pipe - ASTM-A-106.

b) Forged carbon steel fittings - ASTM-A-105.

c) Dimensions of fittings - ANSI-B16.11.

d) Code for pressure piping, welding, hydrostatic testing - ANSI-B 31.1.

e) Nomenclature for instrument tube fittings - ISA-RP 42.1 / 1982.

f) Seamless Stainless Steel Tube ASTM A-213 TP 316 / ASTM A-269 TP 316

g) Seamless Alloy Steel Pipe ASTM A 335 P22

h) Seamless Stainless Steel Pipe ASTM A-312 TP 316

i) Forged and Rolled alloy steel pipe flanges , forged fittings , valves and parts ASTM A - 182

j) Pipe fittings of wrought carbon steel and ally steel - ASTM A - 234

k) Composition bronze metal castings ASTM B - 62

l) Seamless copper tube , bright annealed ASTM B- 168

m) Valves flanged and butt welding ends ANSI B 16.34

13) Cables

a) Thermocouple extension wires / cables - ANSI MC96.1.

b) Insulated Wire and Cable for the Transmission and Distribution of Electrical Energy-IPCEA S-61-402

c) Guide for design and installation of cable system in power generating station (insulation, jacket materials) -IEEE Standard 422.

d) Requirements of vertical tray flame test - IEEE 383

e) Standard specification for tinned soft or annealed copper wire for electrical purpose - ASTM B33.

14) Electronic Cards, Subassemblies and Components

a) Unpackaged

i)	Vibration	:	IEC-68.2.6
ii)	Shock	:	IEC-68.2.27
iii)	Drop & Topple	:	IEC-68.2.31

b) Packaged

Vibration, Drop & Static Compression - NSTA.

c) Electromagnetic Compatibility

i)	Electrical Fast Transient	:	IEC-801.4
ii)	Surge Withstand	:	IEC-255.4
iii)	Radiated Electromagnetic Field	:	IEC-801.3
iv)	Electrostatic Discharge	:	IEC-801.2
v)	Electromagnetic Emissions	:	VDE 0871, Class-B

15) Cable Trays, Conduits

a) Guide for the design and installation of cable system in power generating station (cable trays, support systems, conduits)- IEEE Standard 422, NEMA VE-1, NEC-1981. Test Standards NEMA VE-1-1979.

b) Galvanizing of carbon steel cable trays - ASTM A-386.

Codes and standards as described in different subsections of this specification shall also be followed .

Items such as thermowells, control valves, flow elements and other in line devices in high and medium pressure steam, feed water and similar services, which fall under the purview of Indian Boiler Regulation Act shall be either certified by IBR or shall be certified by authorities acceptable to IBR. It shall be responsibility of Bidder to obtain the necessary approval of the concerned Authority / Chief Inspector of Boilers for the design and design calculations, manufacturing and erection procedure as called for under the IBR Act for all items requiring such certification.

6.00.00 DESIGN CRITERIA

This section lays down the general design criteria to be adapted in designing the Control & Instrumentation system of the plant.

6.01.00 General Requirements

6.02.00 Instrumentation, control and automation devices and accessories shall be designed with the following considerations:

a) Stable in spite of temperature fluctuations.

b) Able to withstand high humidity.

c) Weather proof.

d) Dust proof.

e) Corrosion resistant.

f) Erosion resistant.

g) Able to withstand high vibration.

h) Easily accessible for operation & maintenance.

6.03.00 Parts subject to high pressure, temperature or other severe duty shall be of materials and construction suitable for the service conditions and long operating life.

6.04.00 Components of instruments, control devices, accessories, piping etc. which contact steam, condensate or boiler feed water shall be manufactured from copper-free materials.

6.05.00 Instrument Accuracy, Standard Scales and Ranges

6.05.01 Instrument Accuracy

Instruments shall meet the following general requirements.

a) Pressure measurement shall be linear with respect to the measured pressure.

b) Flow meter shall meet the specified accuracy criteria when operating between 25 and 100 % of full-scale flow. The accuracy shall include the effect of errors in the differential head measuring device, square root converter and signal generator.

c) Level measurement shall be linear with respect to the measured level based on a water specific gravity of 1.00.

d) Wherever the measured parameter is influenced by process pressure & temperature, required compressibility correction shall be introduced.

6.05.02 Instrument Scale Displays

a) All displays shall be in engineering units. Instrument scales displayed on screen will have graduations with scale divisions based on multiples of 10. The smallest division shall preferably be a whole number approximately 1% of the scale range if not otherwise impracticable.

b) Pressure instrument shall have the unit suffixed with ‘a’ or ‘g’ to

indicate absolute or gauge pressure, respectively.

c) Scales and charts of all instruments shall have linear graduations

6.05.03 Instrument Ranges

Instrument range shall be selected to have the normal reading, preferably between 50% and 70% of full scale for linear parameters and 70% to 80% for flow measurements. Deviation indicators shall have the null position at mid scale. The normal operating parameter shall be identified with a clear green mark.

6.06.00 Operability & Maintainability

6.06.01 The system shall be designed such that any 'single-failure' shall not lead to loss of availability of the plant, alteration in operating routine or degradation of performance. This shall be achieved by judicious introduction of redundancy at all critical levels. The plant operator remains totally transparent to 'single-failures'.

6.06.02 The system and operator interfaces / consoles shall be designed for the operation of the unit with minimum operational manpower deployment . Bidder shall ensure proper operability and also take into account protections to achieve no accidental maloperations .

6.06.03 The choice of hardware shall take into account sound maintainability principles and techniques and shall not be limited to the following:

a) Standardization of parts.

b) Minimum use for special tools.

c) Modular and hot replacement.

d) Logical grouping of functions.

e) Separate and non-interactive adjustability.

f) Malfunction identification facility through self-diagnostics.

g) Easy removal, replacement and repair.

h) Easy assembly and disassembly.

i) Fool-proof design to preclude improper mounting and installation.

j) Redundancy of critical parts.

k) Unique process equipment vis a vis hardware identifiability by assigning sub-racks / sub-rack sections to specific plant areas.

6.06.04 Intercommunications in between sub-racks and system termination cabinets and in between sub racks and other panels shall be made by prefabricated connectors and cables with mechanical latch.

6.06.05 Adequate test facility shall be incorporated in the design.

6.07.00 Established Reliability & Availability

6.07.01 The minimum target reliability of each component/module shall be established by taking into consideration its Mean time between failure (MTBF) and Mean time to repair (MTTR), so that availability of the complete system is assured for 99.7%.

6.07.02 In order to establish the target reliability Bidder shall perform necessary availability tests and burn-in tests for major systems. Surge protection for solid state systems, selection of proper materials, manufacturing processes, quality controlled components and parts, adequate derating of electronic components and parts shall be ensured to meet the reliability and life expectancy goals.

6.07.03 Continuous self-checking features shall be incorporated in system design with automatic transfer to healthy/redundant circuits to enhance the reliability of the complete system.

6.08.00 Security and Failure Philosophy

6.08.01 General

It is essential that interlock, protection, supervision and automatic control systems shall have high integrity. Control & Instrumentation system shall meet the following requirements:

a) No single failure shall cause failure of the control.

b) No single fault shall cause the protection system to operate spuriously or cause the protection system to become inoperative.

c) Grouping of the control functions into system blocks shall be such that failure of any one block will only partly degrade the overall system.

d) Control system shall be structured with redundancy so that no single failure within the control system can cause the failure of plant on duty and at the same time cause the standby plant to be unavailable.

e) Due to control system failure if a final control element or plant item does not respond then the control element shall go into a fail safe status.

f) Field wiring for contact interrogation or device control shall be protected such that a fault on the cable does not cause loss of more than a minimum tolerable functionality of the system.

6.08.02 Measurement , Control & Channel Redundancy

To meet the failure and self checking criteria for the control system, measurement redundancy shall be provided for all the critical parameters. Throughout the control system, the security and validity of signals are to be ensured based on the following design principles.

a) Where a plant measurement is to be duplicated or triplicated such signals shall be separately fed to the different input modules.

b) Signals, after due security and validity checking by means of voting, averaging, median, difference monitoring or similar technique shall be used for control functions.

c) Where duplicated measurements are used, provision shall be there for selecting any one as the duty signal. Continuous monitoring of difference between the signals shall be made.

d) For binary and analog inputs required for protection of SG , TG and major auxiliaries whose non availability may result in loss of generation triple sensing devices shall be provided . Binary and analog inputs , which are required for protection of more than one equipment as well as protection signals for important auxiliaries and HT drives etc. triple sensing devices shall be provided .Also other binary and analog inputs required for CLCS dual sensing devices shall be provided . However,for those binary and analog inputs which are also required for protection in addition to CLCS, triple sensing devices shall be provided.

e) Measurement system, CLCS and OLCS shall all be configured with redundancy at processor modules,communication modules, data bus and power supply modules.Triple redundancy shall be followed as described elsewhere in the specification.All servers shall be dual redundant.

f) Both CLCS & OLCS shall be configured with Redundant I/O channels for each sensor/signals. Where redundant sensors are provided redundant I/O channels shall be provided for each sensors/signals.

g) Redundant sensors shall be provided for all control applications. For all closed loop controls (CLCS) triple redundant sensors shall be provided. This will include sensors provided for compensation also. Similarly for critical protection logic requirements triple redundant sensors for 2 out of 3 logic shall also be provided to avoid spurious tripping. For all other control application dual redundant sensors shall be provided.Dual and Triple redundant sensors shall also be provided as described elsewhere in the specification.

h) Signals shall be verified against cable failure / non coincidence monitoring for critical trip signals for SG/TG/ all HT auxiliaries.

6.08.03 Redundancy in input / output modules

1. Redundancy

a) Redundancy in input / output modules for close loop control systems, open loop control system, protection, interlocking and sequential control shall be provided as follows:

i) Wherever redundant sensors are employed each sensor shall be wired to a separate input module so that even if one input module fails, the parameter will be available from the other input module.

ii) If only one sensor is provided then redundant input cards shall be provided and wired accordingly.

iii) Redundant output card shall be provided for the signals from

Control System going to final drive control elements.

b) As regards redundancy for drive control functions the following philosophy may be adopted.

i) For open loop control system input /output I/O modules for realizing drive control functions redundancy in input / output and processing modules shall be envisaged for HT drives and critical LT drives .For BMS / FSSS and Turbine Trip system relevant sections elsewhere. Shall be referred.

c) In addition to above, 20% wired input/output spare channel shall be provided for each I/O module.

2. Bidder to note that all I/O ,Processor , network interface, communication modules etc., shall be sourced from their Original Principlal's works.

3. The system shall be provided with extensive diagnostic features so that a system failure can be diagnosed down to the module level giving location and nature of fault. Ease of maintenance and trouble shooting shall be a primary consideration in equipment selection.

4. The system shall provide inherently safe operation under all plant disturbances and component failures so that under no circumstances safety of the plant personnel nor equipment is zeopardized.. The DDCMIS hardware shall be suitably sized to ensure that the implemented scheme meets the desired requirements. The Bidder through detailed calculations shall establish the adequacy of the system selected and demonstrate the same during shop testing and site testing.

6.08.04 Data highway Redundancy

There shall be Redundancy in the system for high reliability of communication. The redundant buses shall work continuously. All communication modules, bus couplers, bus interfaces etc. shall also be hot redundant.

Communication between the operator station and the functional groups of control microprocessors shall be by means of hot redundant data highways. Redundancy failure shall also be indicated in operating station.

All soft links amongst DDCMIS and various PLC / proprietary control systems including MCS shall be redundant bidirectional OPC link.

6.08.05 Redundancy for Power supply unit

All power supply feeders from UPS (in parallel mode having 50% load sharing) or 24 V DC system (in parallel mode having 50% load sharing) shall be redundant with auto changeover in each ACDB/DCDB panel.

6.08.06 Redundancy in Operaotr’s Console

Operators’ Consoles shall have fall back feature . so that in case of failure of any console , its functions can be taken up in an adjacent console and LVS.

6.08.07 Design Of Enclosures

6.08.08 Design of outdoor enclosures shall be weather proof, dust-tight, drip-proof and shall take into account the environmental conditions.

6.08.09 Enclosures shall be adequately sized so that the maximum permissible temperature rise above 50 Deg C ambient is 10 Deg C (maximum).

6.08.10 Enclosures design shall also take into account greatest possible personnel safety.

6.09.00 Electrical Noise Control

6.09.01 Equipment furnished by Bidder shall incorporate necessary techniques to eliminate problems caused by electrical noise interferences and power line borne surges encountered in power plant environment. Equipment, which are vulnerable to electrical noise interference or surge shall be suitably immunized to eliminate possible problems.

6.09.02 Bidder shall be responsible for implementation of the shielding, input balancing, ripple filtration and grounding for field inputs to achieve installation with minimum noise coupling.

6.09.03 Radiated immunity test shall be in accordance to IEC 801.3.

6.10.00 Surge-Protection For Solid State Equipment

6.10.01 All solid-state equipment shall be able to withstand the surges inherent in a powerhouse environment. Equipment shall be designed to successfully withstand surges without damage to components and/or wiring on application of surge wave whose shape and characteristics are defined in ANSI publication C37.90-a (IEEE-472-1974) entitled "Guide for Surge Withstand Capability (SWC) Tests".

6.10.02 To immunize the system against surge, coupling free wheeling diodes, surge suppressors, opto / galvanic isolators shall be used as required.

6.11.00 Burn-In And Elevated Temperature Test

Solid-state equipment / system shall be certified to be tested for a minimum period of 168 hours continuously under power. Solid-state logic systems shall be subject to the elevated temperature test and burn-in test as complete assemblies.

6.12.00 Elevated Temperature Test

a) During the first 48 hours the ambient temperature shall be maintained at 50° C and the equipment shall be made to repeatedly perform operations it will be expected to perform in service with loads on various components being equal to those which will be experienced in actual service.

b) The 48 hours test period shall be continuous but shall be divided into four 12-hour segments. The power supply voltage during each 12 hours segment shall be nominal voltage for 11 hours; followed by 110 percent of nominal voltage for 30 minutes; followed by 90 percent of nominal voltage for 30 minutes.

c) During the elevated temperature test the cubicle doors shall be kept closed and inside temperature in the zone of highest heat dissipating component /module shall be monitored. Temperature rise inside the cubicle shall not exceed 10 Deg.C above the ambient temperature of 50 Deg.C.

6.13.00 Burn in Test

The 48 hours elevated temperature test shall be followed by 120 hours of burn in test at normal operating temperature. This test shall also be conducted as per above procedure.

6.14.00 Panels, Cubicles and Enclosures

6.15.00 General

a) All panels, cubicles and enclosures shall be furnished complete with integral piping, internal wiring, convenience outlets, internal lighting, grounding, ventilation, space heating, vibration isolating pads and other accessories.

b) Unless otherwise specified cable entry for panels / desks / cabinets shall be through bottom via glanding plate. Fireproof seal shall be used to seal the bottom to prevent entry of dust.

c) Panels and cabinets shall be constructed from steel sheet reinforced as required to provide true surface and adequate support for devices mounted thereon. Thickness of the CRCA steel for UCP / backup panel and other panels/cabinets shall be as described in Section VII of this volume of the specification. Panels and cabinets shall be of adequate strength to support mounted components during shipment and to support a concentrated load of 100 Kilograms on their top after erection.

d) Panel /cabinet shall have eyebolt on top for lifting.

e) Mounting , wiring , powering of all items to be mounted / installed on desks irrespective of the source of procurement shall fall in the scope of erection of Bidder ,this shall include freeissue items furnished by Owner.

6.15.01 Surface Preparation and Painting

Sheet metal exterior steel surfaces shall be sand blasted, ground smooth and painted as specified below:

a) Suitable filler shall be applied to all pits, blemishes and voids in the surface. The filler shall be sanded so that surfaces are level and flat; corners are smooth and even. Exposed raw metal edges shall be ground burr-free. The entire surface shall be blast clean to remove rust and scale. Oil, grease and salts etc. shall be removed from by one or more solvent cleaning methods prior to blasting.

b) Two spray coats of epoxy primer □urface shall be applied to all exterior and interior surfaces, each coat of primer □urface shall be of dry film thickness of 1.5 mil. A minimum of two spray coats of final

finish color (Catalyzed epoxy or polyurethane) shall be applied to all surface of dry film thickness 2.0 Mil. The finish colors for exterior and interior surfaces shall conform to the following shades:

i) Exterior : Opaline green shade 275 of IS: 5

ii) Interior - Brilliant Glossy White.

c) Paint films, which show sags, cheeks, blisters, teardrops, fat edges or other painting imperfections shall not be acceptable.

6.15.02 Wiring

Wiring within the panels shall conform to NEC standards and shall be factory installed and tested at the works. All interior wiring shall be installed neatly. Features shall not be limited to the following :

a) All spare contacts of relays, switches and push buttons shall be wired up to the terminal blocks.

b) Each wire shall be identified at both ends with wire designation as per approved wiring diagram. Heat shrinkable type ferrules with indelible computerized print shall be used with cross- identification.

c) Wire termination shall be made with insulated sleeve and crimping type lugs. All external connections shall be made with one wire per terminal. Wire shall not be spliced or tapped between terminals. Open-ended terminal lugs shall not be used.

d) Internal wiring shall be terminated uniformly on one side of the terminal block leaving the other side available for termination of outgoing cables.

e) Thermocouple lead wires, analyzer measuring lead wires, or any other lead wires carrying measuring signal of the order of low mili volt or micro volt shall be electrically and physically isolated from other AC and DC wiring.

f) All low-level signal cables shall be separately bundled from control cable.

g) Wires shall be dressed and run in troughs with clamp-on type covers. Wirings shall be neatly bunched in groups by non-metallic cleats or bands. Each group shall be adequately supported along its run to prevent sagging or strain on termination.

h) Shield wires shall be terminated on separately.

i) Common connections shall be limited to two wires per terminal.

j) Wiring to door mounted devices shall be provided with multi-strand wires of (49 strands minimum) adequate loop lengths of hinge-wire so that multiple door openings will not cause fatigue to the conductor.

k) Wiring shall be arranged to enable instruments or devices to be removed and/or serviced without disturbing the wiring. No wire shall be routed across the face or rear of any device in a manner, which will

impede the opening of covers or obstruct access to leads, terminals or devices.

l) Panel internal wiring shall follow distinct color-coding to segregate different voltage levels viz. 24V DC, 48V, 110V AC, 240V AC, 220V DC etc.

m) Panels /cabinets /desks shall be provided with removable gasketted cable gland plates and cable glands. Split type grommets shall be used for prefab cables.

n) Wire shall be multistranded annealed flexible high purity copper conductor with heat resistant FRLS PVC insulation and shall pass vertical flame test per IPCEAS-1981.

o) Wire sizes used for internal wiring shall not be lower than the followings :

Control wiring (switches, pushbuttons etc.)	: 1.5 Sq.mm
Power supply/receptacle /illumination wiring	: 2.5 sq. mm or higher as per load
4-20mA DC current and low voltage signal upto 48V DC	: 0.5 Sq. mm

p) Identification of conductors shall be done by insulation color-coding identified on drawings or by printed wiring lists.

6.15.03 Grounding

a) System cabinet AC and DC ground shall be electrically isolated from each other and also electrically isolated from the Instrumentation signal ground. All the above ground shall be individually connected to the single point on the ground pit. Dedicated redundant earth pit shall be provided which shall be away from the HV equipment. This earth pit shall not be shared with other electrical equipment ground and shall also be insulated from other electrical system ground to ensure single point grounding of the system. Grounding resistance shall be better than 1.0 ohm. IEEE guideline shall be followed while designing the grounding system.

b) Panels and cabinets shall be provided with a continuous tinned copper ground bus bar of minimum 25 mm x 6 mm cross section, extending along the entire length of the panel / desk / cabinet assembly. The ground bus shall be bolted to the panel structure and effectively ground the entire structure.

c) The panel /desk /enclosure /JB ground shall have two (2) bolt drilling with GI bolts and nuts at each end to connect to GI/ copper flat ground riser by means of insulated copper ground cable of required cross section with lug.

d) Circuits requiring grounding shall be individually and directly connected to the panel ground bus.

e) For electronic system cabinets, the electronic system ground bus shall be similar but insulated from the cabinet and shall be separately connected to the system ground. Signal cable shields shall be grounded at the panel end only and shall not be left open. The ground in between panels of a shipping section shall be firmly looped.

f) Electrical meters, relays, transmitters and switching devices, operating at a voltage less than 50V may be grounded through the steel structure.

6.16.00 Panel / Cabinet/ Desk/ Enclosures / junction boxes & instruments Environmental Protections

a) Panels, cabinets, desks, distribution boxes, racks ,junction boxes, terminal boxes , instruments and all other field mounted equipment / enclosures shall suit the environmental condition of the area and shall not be inferior than the requirement indicated in the following table.

SL. NO.	LOCATION	ENCLOSURE TYPE
1.	Indoor type non- ventilated enclosure in non-hazardous area	IP-54
2.	Indoor type ventilated enclosure in non-hazardous area	IP -42
3.	Enclosure in Air conditioned area	IP-32 with suitable canopy at top to prevent ingress of dripping water.
4.	Outdoor type in non-hazardous areas	IP-65 with anticorrosion coating.
5.	Outdoor in hazardous areas	As per requirements of the NEC Code for the location

b) The construction of electrical enclosures located in areas subject to conditions classified in the National Electrical Code (NEC) as hazardous shall be of a type designated suitable for the environment in which they are located.

6.17.00 Terminal Blocks

All ternminal blocks shall be provided complete with all required accessories including .Each terminal shall have LED indication with fuses to indicate and isolate earth faults. Spring-loaded (Cage-clamp type) terminals shall be used for termination of instrumentation cables at field JBs, FTCs and local panels.

7.00.00 METERING BASES AND CHART UNITS

The following system of units shall be followed for various displays and scales unless otherwise mentioned:

i)	Pressure	: Kg/cm^2
	Differential Pressure	: mm of H_2O column / Kg/cm^2
ii)	Draught	: mm of H_2O column
iii)	Vacuum	: Kg/cm^2 (abs)/mm of Hg column
iv)	Temperature	: Degree Celsius (^{O} C)
v)	Flow (Steam, Water)	: Tonnes / hr, M^3/Hr
vi)	Flow (Oil)	: M^3 / Hr, Liter/Hr
vii)	Flow Air	: Tonnes / hr / M^3 / Hr.
viii)	Density	: gms / c.c.
ix)	Level	: Mm /%
x)	Conductivity	: Siemens / cm
xi)	Gas Analyzer	: Percentage by weight or as specified in respective case.
xii)	Dissolved Oxygen / Silica / Sodium	: ppm /ppb

8.00.00 PROCESS CONNECTION & INSTRUMENT HOOK UP

8.01.00 Instrument connection to the process system (piping, vessel etc.) shall be according to the process & piping specification upto and including the root valves. Root valves shall be installed as close as possible to the piping or vessel.

8.02.00 Each instrument shall have its own independent connection to the process except for instruments located on standpipe. Each instrument shall be connected independently to the standpipe through isolation valve.

8.03.00 Process connection for instruments lines and vessels shall be in accordance to standards such as ASME or other recognized international standards.

9.00.00 POWER SUPPLY SYSTEMS

9.01.00 Instrumentation power supply system shall include all conditioning equipment required to accommodate normal variations in the electrical supply. All panels and cabinets shall accept redundant power feeds from two different sources.

9.02.00 Type of power supply systems envisaged for the various C&I system including DDCMIS are as follows:

240V AC Redundant UPS system for C&I control & monitoring system including DDCMIS , HMIs, Main Plant Field devices / equipment, CCTV, EWLI, CEMS, SWAS , AAQMS etc. and PLC / proprietary control and

monitoring system ,Training Simulator , RIOs , LCPs for package Systems. Volume V of this specification shall be referred for details requirement of the UPS.

10.00.00 ENVIRONMENTAL CONSIDERATIONS

C&I components shall operate properly with no degradation in expected lifetime or in operation parameter in the normal power plant environment. C&I system shall be designed considering all the operating conditions which may be encountered during installation and operation.

10.01.00 Temperature

10.01.01 Where the environmental extreme exceeds the capabilities of the selected system, Bidder shall take appropriate steps to control the environment.

10.02.00 Humidity

10.02.01 C&I system shall be designed to withstand the humidity limits specified for the project. Condensation shall not be allowed to form in the cabinets nor shall water be allowed to be admitted through conduit entering the cabinets from top or sides.

10.03.00 Atmospheric Contamination

10.03.01 Particulate contamination from fly ash and coal dust and gaseous contaminants such as SO2 and other flue gas constituents in the coal fired plant are foreseen. This hazard shall be taken into design considerations.

10.04.00 Vibration

10.04.01 Design of the systems shall include features such as locking devices, anti vibration pads etc, to withstand vibration. In general, C&I equipment shall be installed away from the vibration zone.

10.05.00 Lightning

10.05.01 Protection against lightning shall be considered by providing proper grounding, metal oxide varistors, spark gap lightning arrestor, optical isolator and isolation transformer.

11.00.00 SECURITY

11.01.00 Door lock shall be provided in all Panels, Cabinets and Enclosures.

11.02.00 System mode key switch or password to prevent tampering of system program.

11.03.00 Redundant elements of the system shall not be exposed to the common hazards. For example routing of the redundant network cable through separate cable raceway, using separate cabinet / separate rack for redundant controller and redundant IO modules.

12.00.00 ACCEPTANCE TESTS

The Bidder shall be required, as part of his Bid, to fully integrate and test all the equipment, included in his Bid and respective Control packages at site and at the manufacturer's works. Owner / Consultants shall witness these tests.

The Bidder shall consider in his Bid the following minimum tests:

(a) Factory Acceptance Test (FAT)

After completion of manufacture of all control and monitoring systems like DDCMIS , PLC, BOP nework PLC , Proprietary control systems , HART management system , RMCMS , MCS , Alarm annunciation system , AAQMS , CEMS , CCTV , Plant telephone System , CMIMS , SWAS , etc. and prior to delivery to site, the manufacturer shall functionally test the assembled system. The integrated test shall be carried out with all input / output cubicles, control processors, data highway, operator's consoles, Engineer's console and peripheral devices connected in the specified configuration. The fully configured software shall also be loaded and tested at the same time.

The FAT shall include , as a minimum , the following activities:

- Complete hardware and software inspection;
- Heat cycle run test as per the prevailing standards;
- Functional test of a 100 % of all configured points, logic routines, control functions, graphic displays, reports and logs;
- Demonstration of special calculations (e.g. efficiency calculation, performance calculations etc.);
- Testing of redundancy facilities to demonstrate automatic change over to standby data highway, power supply and control processor etc.;
- Demonstration of displays , logs and system diagnostic facilities;
- Demonstartion of spare capacity
- Demonstration of third party interface

The FAT shall be witnessed by the Owner / Engineer who shall be notified at least three (3) weeks before the commencement of the tests. The system shall have been fully pre-tested by the manufacturer at his works prior to notifying the Owner / Engineer to ensure any component, equipment or system fault have been identified and cleared. The test procedure for the FAT shall be issued to the Owner and agreed prior to notification. All documents / drawings and test equipment shall be available at the manufacturer's works during the FAT.

The FAT shall include a 72 hour continuous operational run, any equipment fault or failure during this time shall make this part of the test null and void and the test run shall be re-started after rectification of the fault. A test certificate, accompanied by the relevant test results, shall be issued after successful completion of the tests.

Duration of the FAT shall be at least six weeks for each system .

(b) Site Acceptance Test (SAT)

After installation, connection, integration with other systems and all pre-commissioning checks have been carried out on the complete system, the SAT shall be performed and witnessed by the Owner. The SAT shall include the following as a minimum:

a) Complete hardware , software and installation inspection;

b) Testing of redundancy facilities by simulating data highway, power supplies and control processor failures. All such units shall be tested to demonstrate of the automatic operation of the standby units and initiation of the relevant system alarms;

c) Demonstration of system diagnostic facilities; by the simulation of the appropriate fault conditions. The system fault reporting techniques shall also be demonstrated;

d) Testing of data highway integrity using continuity test equipment based on signal injection / reflection techniques;

e) Demonstration of data logging, displays, sequence of events trending system operation.

f) Pre-commissioning checks shall include the following as a minimum :

i) Calibration of all field instruments, analyzers and equipment, in the scope of supply of this package, at site;

ii) Loop checking, for all open and close loops, between source and destination with manual signal injection as well as from Operating Consoles for entire DDCMIS / PLC/ Proprietary control systems I/Os;

iii) Logic sequence check with the manual signal injection at signal source as well as checking of feed back signals.

All individual configured data points, logic routines, control functions, graphic displays and reporting facilities shall be verified as part of the loop tests.

The Owner shall be notified at least 2 weeks before the commencement of the test. The procedures shall be issued and agreed before notification.

A test certificate accompanied by the relevant test results shall be issued after successful completion of the calibration and test.