TECHNICAL SPECIFICATION

FOR

CONTROL VALVES WITH ACCESSORIES

(Pneumatically Operated)

1 x 250 MW ROURKELA TPP

VOLUME - IIB

SECTIONS-A, C & D

SPECIFICATION No: PE-TS-427-145-I108

BHARAT HEAVY ELECTRICALS LIMITED

POWER SECTOR

PROJECT ENGINEERING MANAGEMENT DIVISION

NOIDA, INDIA

CONTENTS

VOL-II B

SECTION	DESCRIPTION	PAGE NO.
A	Scope of Enquiry	4
C	Specific Technical Requirements	6
	Customer's Specification	12
	Datasheets-A&B (Data sheet no. PES-145-06-DS1-1)	19
	Datasheets-C (Data sheet no. PES-145-06-DS2-1)	65
	Quality Plan	69
	Bill of Quantity - Main Supply	76
	Bill of Quantity - Spares	79
D	Equipment Specification (PES – 145 – 06) 29	82
	Specification for Smart Positioner (PES – 145 – 06A) 35	88
	Hook-Up Diagram (PES-145-06B) 39	92
	Guideline for Packing (PES-145-06C) 45	96
	Specification for Electric Actuator (PES-145-06D) 47	98

SECTION – A

SCOPE OF ENQUIRY

SCOPE OF ENQUIRY

1. SCOPE

1.1 This specification covers the Design, Manufacture, Inspection and testing at manufacturer's works, proper packing for transportation and delivery to site of the **Control Valves with Pneumatic Actuator along with Accessories, Start-up/Commissioning Spares** as mentioned in different sections of this specification for **1 X 250 MW ROURKELA TPP** project.

1.2 The quality plan enclosed forms the minimum requirement but not limited to be adhered to by the bidder. Bidder to sign and stamp the same and submit along with the offer as an acceptance.

1.3 Following signed & stamped documents with company seal to be submitted by bidder.

a) Complete offer including calculation sheets, catalogues etc.
b) Quality Plan
c) Datasheet A & B, duly filled
d) Schedule of prices & unit prices, inspection schedule
e) Schedule of submission of drawings/documents, equipment manufacture, inspection & dispatch.

2 GENERAL TECHNICAL INSTRUCTIONS

2.1 It is not the intent here to specify all the details of design and manufacture. However, the equipment shall conform in all respects to high standard of design, engineering and workmanship and shall be capable of performing the required duties in a manner acceptable to the customer / consultant, who will interpret the meaning of drawing and specification and shall be entitled to reject any component or material which in his judgment is not in full accordance herewith.

2.2 The omission of specific reference to any component / accessory necessary for the proper performance of the equipment shall not relieve the supplier of the responsibility of providing such facilities to complete the supply within the quoted prices.

2.3 BHEL' s / Customer' s representatives shall be given access to the shop in which the equipment are being manufactured or tested and all test records shall be made available to them.

2.4 The Equipment covered under this specification shall not be dispatched unless the same have been finally inspected, accepted and Material Dispatch Clearance Certificate (MDCC) is issued by BHEL / Customer.

SECTION – C

- **SPECIFIC TECHNICAL REQUIREMENT**
- **CUSTOMER'S SPECIFICATION**
- **DATA SHEETS – A & B**
- **DATA SHEETS– A & B FOR ACCESSORIES**
- **DATA SHEETS – C**
- **QUALITY PLAN**
- **BOQ-MAIN SUPPLY**
- **BOQ- SPARES**

SPECIFIC TECHNICAL REQUIREMENTS

The requirements in this section are specific for this project and shall over-ride the specification under Section-D in case of any contradiction. However in case of any contradiction between this SPECIFIC TECHNICAL REQUIREMENTS and customer SPECIFICATION attached further, the customer SPECIFICATION shall prevail and BHEL's decision shall be final. BIDDER to comply the stringent requirement as per BHEL decision without any commercial implication.

1. **All the formats in Volume-III, SCHEDULE OF SUBMISSION OF DRG./DOC. and QUALITY PLAN (BHEL Format) should filled-up and furnished with the bid, complete in all respect. In the absence of those, the bid would be considered incomplete and liable for rejection.** Catalogue, Leaflets related with the models of Control Valves as well as each Accessory must be furnished with the offer.

2. The Hook-up diagram for Control valve, attached in Section-D. The scope demarcation as indicated should be adhered. The connection details at Instrument Air valve shall be furnished to successful bidder after the award of contract.

3. Valve Body Sizes shall be quoted to take care of the specification requirements like parameters, and limitations of Fluid outlet velocities, Noise Level etc. **However Port (Trim) Sizes shall be selected to suit CV requirement for achieving percentage valve lift as per Technical Specification.**

4. Bidder to note that, **wherever downstream side of the valve is subjected to the Vacuum service, bidder to offer double Gland packing, and in that case, flow direction of working fluid shall be to close the valve**. Separate indication for the same has not been made in the data sheets-A.

5. For valves subjected to cavitation service, anti-cavitation trim shall be provided.

6. In case during erection/commissioning of the control valve, any spares are required which have not been specified in the Start-up/commissioning spares list, the same will have to be supplied by the bidder free of cost.

7. Facility to adjust the maximum travel of the stem & starting point of travel shall be incorporated.

8. SS nameplate to control valve shall include Tag no./ KKS no./ Sl. No./ Body material/ size/ Press Rating/ Trim material/ Trim type/ action on air failure/ diaphragm air press at full open and close condition

9. Hand wheel shall have open/ close direction.

10. Limit switch shall be designed for 1,00,000 operations.

11. JB shall be 36 ways as per enclosed hook-up diagram.

12. The material of filter for Air Filter Regulator shall be ceramic/Sintered bronze.

13. Bidder to indicate pick-up & drop out voltage for all solenoid valves.

14. Protection class for Limit switches, I/P converter and Position transmitter shall be IP-65 only.

15. All JBs and valves shall be with double compression type Ni plated brass cable glands.

16. Solenoid valve class of protection shall be IP-65, shall be of Plug and socket electrical connection.

17. All local cabling up to JBs shall be in Conduit (Flexible/Rigid).

18. The smart positioner provided with Control Valves shall be compatible with Universal Hart Calibrator.

    In order to interface with METSO system, the smart positioner of Control Valves has to be HART Compatible. Bidder to provide diagnostic software (for all tags) to be installed on HMS PC for communicating with the smart positioner and accessing the diagnostic features of the smart positioner. Bidder to offer latest version of calibration and diagnostic software which should be compatible with latest operating system at the time of commissioning of valve/positioner without any additional cost to BHEL. The offered software shall be compatible with the HART MANAGEMENT SYSTEM hardware of reputed makes like MTL, P&F etc. Additionally Vendor to provide DTM (devise type manager) / DTD (device type description) files for engineering. **Refer clause no 08.00.07 page no 15 of 99.**

19. Positioner shall have both fail freeze and fail safe feature.

20. SPARES: The following spares are required to be offered

(A) Recommended Spares:

The bidder shall furnish a List of Recommended spares for 3 years of normal operation of the Control valves / Accessories. The BHEL/Customer reserves the right to buy any or all of the recommended spares.

The prices of these spares will remain valid for a period of minimum 6 months after the placement of order.

(B) Start-up & Commissioning Spares:

Start-up and Commissioning spares are those spares, which may be required during the start-up and commissioning of the Control Valves. All start-up spares, which are supplied under this contract, shall be strictly interchangeable with the parts for which they are intended for replacements. The format for price schedule to be filled-up by the bidder is enclosed in Volume-III

The Start-up and commissioning spares indicated by the bidder shall be a part of the main Control valves supply. However bidder to indicate prices separately. The list of these spares required is enclosed in the section-C of this specification.

Bidder to indicate the service life expectancy period for the spare parts under normal working conditions. The spares shall be treated and packed for long storage, under climatic conditions prevailing at site. Small items shall be packed in sealed transparent plastic bags with desiccator's packs as necessary.

20. Documentation:

(A) Along with the bids: following documents for the project

a) Signed and stamped compliance certificates in attached format (VOL.-III) (if any).

b) "Schedule of prices" and "Schedule of unit Prices" in attached format (VOL.-III).

c) Schedule of submission of Drg. / Doc, Equip. Manufacture, Inspection and Dispatch.

d) Inspection schedule

e) Quality Plan Duly signed and Stamped

(B) After the award of contract:

The documentation as listed below for the project

6 sets of the following documents + 3 sets of CDs to be enclosed with the bids for Approval:

a. Assembly (dimensional) drawings.

b. Valve Edge preparation details.

c. Data sheet-C completely filled-up.

d. Hook-up diagram of Control Valve with Actuator & Accessories.

e. Valve & Actuator assembly dimensional drawings with weights.

f. Quality Plan duly signed and stamped.

g. All calculations like CV, Noise Level, Valve Outlet Velocity, Actuator sizing etc.

h. All relevant catalogues for the models of the valves as well as accessories finalized.

i. Bar chart to indicate the time schedule for procurement, manufacture, testing and dispatch.

(B) Final documentation:

The documentation as listed below will separate for respective projects

1. Category –I & IV Approved final drawings/data sheets, – 20 sets with 4 CD-ROMS
   Valve sizing calculations, Noise level calculations and
   Valve Outlet Velocity calculations.

2. Test certificates – 20 sets.

3. Operation & Maintenance Manuals for Control Valve, Actuator and all the Accessories. – 20 sets with 4 CD-ROMS

CUSTOMER SPECIFICATION

08.00.00 CONTROL VALVE AND ACTUATOR WITH ACCESSORIES

08.00.01 General Requirements

The control valves and accessories equipment furnished by the Bidder shall be designed, constructed and tested in accordance with the latest applicable requirements of code for pressure piping ANSI B 31.1, the ASME Boiler & pressure vessel code, Indian Boiler Regulation (IBR), ISA, and other standards specified elsewhere as well as in accordance with all applicable requirements of the "Federal Occupational Safety and Health Standards, USA" or acceptable equal standards. All the Control Valves, their actuators and accessories to be furnished under this Sub-section will be fully suitable and compatible with the modulating loops covered under the Specification.

All the control valves and accessories offered by the Bidder shall be from reputed, experienced manufacturers of specified type and range of valves.

For special type of control valves such as combined pressure and temperature control valves for Aux PRDS application, separator drain control valves, refer to the corresponding mechanical sections.

08.00.02 CONTROL VALVE SIZING & CONSTRUCTION

The design of all valve bodies shall meet the specification requirements and shall conform to the requirements of ANSI (USA) for dimensions, material thickness and material specification for their respective pressure classes.

The valve sizing shall be suitable for obtaining maximum flow conditions with valve opening at approximately 80% of total valve stem travel and minimum flow conditions with valve stem travel not less than 10% of total valve stem travel. All the valves shall be capable of handling at least 120% of the required maximum flow. Further, the valve stem travel range from minimum flow condition to maximum flow condition shall not be less than 50% of the total valve stem travel. The sizing shall be in accordance with the latest edition of ISA handbook on control valves. While deciding the size of valves, Bidder shall ensure that valves trim exit outlet velocity as defined in ISA handbook does not exceed 8 m/sec for liquid services, 150 m/sec. for steam services and 50% of sonic velocity for flashing services. Bidder shall furnish the sizing calculations clearly indicating the outlet velocity achieved with the valve size selected by him as well as noise calculations, which will be subject to Owner's approval during detailed engineering.

Control valves for steam and water applications shall be designed to prevent cavitation, wire drawing, flashing on the downstream side of valve and down stream piping. Thus for cavitation/flashing service, only valve with anti cavitation trim shall be provided. Detailed calculations to establish whether cavitation will occur or not for any given application shall be furnished.

Control valves for application such as SH Spray Control, RH spray Control, Heavy Oil Heating, pressurizing and Control system, HP/LP heater Emergency level control, Emergency Make-up to condenser hotwell, GSC minimum flow, Deaerator Drain to Condenser Hotwell, Condensate spill to condensate reserve tank, condenser normal make-up and valve gland sealing supplying pressure control, CEPS minimum flow control, BFP circulation control valve shall have permissible leakage rate as per leakage Class V. All other control valves shall have leakage rate as per leakage Class-IV.

The control valve induced noise shall be limited to 85 dBA at 1 meter from the valve surface under actual operating conditions. The noise abatement shall be achieved by valve body and trim design and not by use of silencers.

08.00.03 **Valve Construction**

1. Proper selection of valve type and material of construction to meet operating requirement.
2. All valves shall be of globe body design and straightaway pattern with single or double port unless otherwise recommended by the manufacturer to be of angle body type. Rotary valve may alternatively be offered when pressure or pressure drops permit.
3. Valves with high lift cage guided plugs & quick charge trims shall be supplied.
4. Cast iron valves are not acceptable.
5. Bonnet joints for all control valves shall be of the flanged and bolted type for easy dis-assembly. Bonnet joints of internal threaded or union type shall not be acceptable.
6. Plug shall be of one-piece construction either cast, forged or machined from solid bar stock. Plug shall be screwed and pinned to valve stems or shall be integral with the valve stems.
7. All valves connected to vacuum on down streamside shall be provided with packing suitable for vacuum applications (e.g. double vee type chevron packing).
8. Valve characteristic shall match with the process characteristics.
9. Extension bonnets shall be provided when the maximum temperature of flowing fluid is greater than 280^{0}C.
10. Flanged valves shall be rated at not less then ANSI pressure class of 300 lbs.
11. The valve gland packing material shall be selected to suit the operating temperature. PTFE may be chosen for low temperature applications and for high temperature applications GRAFOIL shall be provided.
12. The valve body shall be marked to show direction of flow.

08.00.04 Valve Materials

1. Bidder shall provide valve body and trim material as indicated in the following table as per the service conditions:-

Sl. No.	Service	Body Material	Trim Material
1.	Non-corrosive, non-flashing and non-cavitation service	Carbon steel ASTM-A216 Gr. WCB for fluid temperature below 275 ^{o}C Alloy steel ASTM-A217 Gr. WC9 for fluid temperature above 275 ^{o}C	316 SS stellited with stellited faced guide posts and bushings.
2.	Severe flashing/cavitation services	Alloy steel ASTM-A217 Gr. WC9	440 C
3.	Low flashing/cavitation service	Alloy steel ASTM-A217 Gr. WC6	17-4 pH SS
4.	Condensate DM water	316 SS	316 SS

	service		

NOTE: Valve body rating shall meet the process pressure and temperature requirement as per ANSI B16.34

1. However, bidder may offer valves with body and trim materials better than specified materials and in such cases vendor shall furnish the comparison of properties including cavitations resistance, hardness, tensile strength, strain energy, corrosion resistance and erosion resistance etc. of the offered material vis-a-vis the specified material for Purchaser 's consideration and approval.

08.00.05 End Preparation

Valve body ends shall be either butt welded / socket welded, flanged (rubber lined for condensate services) or screwed as finalized during detailed engineering and as per Purchaser 's approval. The welded ends wherever required shall be butt welded type as per ANSI B 16.25 for control valves of sizes 65 mm and above. For valves sizes 50 mm and below welded ends shall be socket welded as per ANSI B 16.11. Flanged ends wherever required shall be of ANSI pressure-temperature class equal to or greater than that of the control valve body.

08.00.06 Valve Actuator

1. Turbine Inlet Control Valves shall be provided with electro-hydraulic actuators and all other control valves shall be furnished with pneumatic actuators. The vendor shall be responsible for proper selection and sizing of valve actuators in accordance with the pressure drop and maximum shut off pressure and leakage class requirements. The valve actuators shall be capable of operating at 70°C continuously.
2. Multi-spring opposed diaphragm type pneumatic actuators shall be provided for pneumatic control valves. Pneumatic control valve actuators shall be designed for maximum air supply pressure of 3 Kg/cm^2.
3. Valve actuators and stems shall be adequate to handle the unbalanced forces occurring under the specified flow conditions or the maximum differential pressure specified. An adequate allowance for stem force, at least 0.15 kg / cm^2 per linear millimeter of seating surface, shall be provided in the selection of the actuator to ensure tight seating unless otherwise specified.
4. The travel time of the pneumatic actuators shall not exceed 10 seconds.
5. For quick opening / closing services (such as fuel oil shut-off valve),the actuator shall be pilot solenoid operated pneumatic drive; the rating of solenoid shall be 24 V DC.
6. Selection of actuator shall be such that it meets the requirements of thrust / torque, stroke length, angular movement, full scale travel time, repeatability & accurate positioning for successful operation of final control element.
7. All the actuators shall have also provision for manual operation during emergency / maintenance along with graduated local position indicator.

08.00.07 Control Valve Accessory Devices

1. All control valve accessories such as air locks, hand wheels / hand-jacks, limit switches, microprocessor based electronic positioners, diffusers, external volume chambers, position transmitters, reversible pilot for positioners, tubing and air sets, solenoid valves and junction boxes etc. shall be provided as per the requirements.
2. Microprocessor based **SMART positioners** shall have following features

Electrical	Input Signal	4-20 mA
	Power Supply	Loop powered from the output card of control system.
	Hart Protocol	Compatibility for Remote Calibration and Diagnostics [super-imposed Hart signal on input signal (4-20mA)]
	Valve Position sensing	Position Sensing (Non contact-Type), 4-20 mA O/P signal for control system to be provided.
Environment	Operating Temp.	(-) 30 To 80 Deg.C
	Humidity	0-95%
	Protection Class	IP-65 Minimum
	Diagnostic / test Features	Advanced diagnostic features like stroke counter or travel counter, leakage in Actuators, on line partial closure Test, valve signature Analysis, Step response Test, valve Friction / Jamming Detection etc. To be provided
Test Reports	Factory Valve Signature Tests Reports (Pr Vs Valve Travel and Travel Vs I/P signal) are to be provided.	
Tests Certificates	Test certificates as per manufacture Standard / Relevant Standard are to be submitted.	
Configuration / Remote Calibration, Auto & Manual Calibration shall be possible.		
Operating	Operating Range	Full Range & Split Range Signal Range
Modes	Valve Action	Direct & Reverse Valve action.
	Flow	Possible to fit Valve Characteristic

	Characterisation	Curve Linear & Equal Percentage.
Fail Safe / Fail Freeze	Fail Safe / Fail Freeze feature is to be provided.	
Pneumatic	Air Capacity	Sufficient to handle the Valves Selected / Boosters to be supplied if required.
	Air Supply Pressure	To suite the Air Supply Pressure / Quality available.
	Process Connection	¼ inch NPT.
Performance	Characteristic Deviation	<=0.5% of span.
	Ambient Temp Effect	<=0.01%/Deg C or better.
EMC & CE Compliance	Required to International Standard like EN / IEC	EN 50081-2 & EN 50082 or Equivalent.
Accessories	In built Operator Panel	Display with push buttons for configuration and display on the positioner itself (Password Protected / Hardware Lock).
	Pressure Gauge Block	For Supply & Output Pressure, Filter Regulator and other accessories shall be provided as on required basis for making system complete.
	Electrical Cable Entry	½" NPT, Side or Bottom Entry to avoid water ingress.
	Valves Mounting Assembly	For Sliding Stem / Rotary / Single Acting / Double Acting on required basis.

08.00.08 Test & Examination

1. All valves shall be tested in accordance with the quality assurance programme agreed between the Purchaser and the vender which shall meet the requirement of IBR and other applicable codes.

2. The tests shall include but not but limited to the following:

   - Non-destructive test as per ANSI B – 16.34.
   - Hydrostatic shell test in accordance with ANSI B16.34 prior to seal leakage test.
   - Valve closure test and seal leakage test in accordance with ANSI B16.34 and as per the leakage class indicated under clause no. B.6.

- Functional test: The fully assembled valves including actuators control devices and accessories shall be functionally tested to demonstrate times from open to close position.
- All control valves shall be tested with the positioners for accuracy of positioning and reproducibility over the full range of travel.
- CV Test : CV test shall be carried out as type test on each size, type and design of the valves as per AISA 75.02 standard and test report shall be furnished for Purchaser 's approval.
- Magnetic particle inspection shall be performed on all machined surfaces of valves having ASA rating of 1500 lbs ASA or greater. All carbon steel valves with 1500 lbs ASA or greater shall receive 100% radio graphic examination in accordance with ASTM – E71.

3. Vendor shall submit test certificates for the tests mentioned in above paragraphs in accordance with ASME and ASTM requirements. In addition vendor shall also submit for the above equipment, certificate of manufacture and test as required by the Indian Boiler Regulations. The certificate shall be in the prescribed forms III A & III C and shall be endorsed by an Inspection Authority recognized by the Indian Boiler Regulations.

SECTION-C

DATASHEET A&B

General technical requirements for control valve with Accessories (with pneumatic actuator) are:

1. Valves selection will be based on enclosed control valve design parameters.
2. Trim material has been specified for the mentioned service conditions. However, any substitute material if recommended by the manufacturer will be provided if found technically acceptable after evaluation.
3. Characteristics of control valves has been selected based on application / services. However in case supplier is not able to offer the required characteristics, due to Design considerations modified trim (mod.eq percentage or mod linear) will be selected after technical evaluation.
4. Ant cavitation trims shall be provided for valves with cavitation services and Hardened trims for flashing services
5. Valve body and trim design shall achieve the noise abatement. However low noise Pack (cartridge/diffuser) may be used in the downstream side of the valve due to Design constraints.
6. Control valve accessories shall be fitted on the valve body. Junction box shall be mounted on the valve body.
7. Type of flow action (" under the seat" or " over the seat") will be selected by the Vendor, however wherever downstream side is subjected to vacuum, flow action shall be "flow to close" (over the seat).
8. Wherever CV test certificates for the model, type (of valve) selected is available, the same shall be acceptable. However CV test shall be conducted on valves for which CV test certificates are not available.
9. The calculated CV, %valve lift and valve outlet velocity for different parameter Conditions shall be incorporated in vendors final documentations, after detail Engineering.
10. Control valve drawings / documents / datasheet giving details of model no, valve Size, and calculations for valve sizing, noise & velocity and technical details of Various accessories (of the successful bidder) shall be furnished for information And records after completion of engineering and supplies.
11. Extension bonnets shall be provided when the maximum temperature of the flowing Fluid is greater than 280 deg C.
12. The valve sizing shall be suitable for obtaining maximum flow conditions with valve opening at approximately 80% of total valve stem travel and minimum flow conditions with valve stem travel not less than 10% of total valve stem travel. All the valves shall be capable of handling at least 120% of the required maximum flow. Further, the valve stem travel range from minimum flow condition to maximum flow condition shall not be less than 50% of the total valve stem travel.

INDEX

Sl. No	Tag No	Description	Sheet No
1.	AS-2	AUXILLARY STEAM TO D/A PEGGING	3
2.	CD-11	MAIN CONDENSATE CV 30%	5
3.	CD-14	MAIN CONDENSATE CV 100%	7
4.	CD-21	EXCESS RETURN TO CST	9
5.	CD-25	CEP MINIMUM RECIRCULATION	11
6.	CD-71	CONDENSATE FOR VALVE GLAND SEALING	13
7.	CRH-2	DEAERATOR PEGGING FROM CRH	15
8.	DR-2	HPH-6 NORMAL DRAIN TO HPH-5	17
9.	DR-6	HPH-6 ALT DRAIN TO DEAERATOR	19
10.	DR-9	HPH-6 ALT DRAIN TO HP FLASH TANK	21
11.	DR-13	HPH-5 DRAIN TO DEAERATOR	23
12.	DR-16	HPH-5 ALT DRAIN TO HP FLASH TANK	25
13.	DR-19	LPH-3 NORMAL DRAIN TO LPH-2	27
14.	DR-22	LPH-3 ALT DRAIN TO LP FLASH TANK	29
15.	DR-25	LPH-2 NORMAL DRAIN TO LPH-1	31
16.	DR-28	LPH-2 ALT DRAIN TO LP FLASH TANK	33
17.	DR-38	DEAERATOR OVERFLOW TO LP F/TANK	35
18.	FD-17	FEED CONTROL VALVE(HIGH CAPACITY)	37
19.	FD-20	FEED CONTROL VALVE (LOW CAPACITY)	39
20.	DM-2	DM EMERGENCY MAKE UP TO HOTWELL	41
21.	DM-6	DM NORMAL MAKE UP TO HOTWELL	43

Tag No.: **AS-2** Qty.: **ONE** Data Sheet No. PES-145-06-DS1-0

DATA SHEET – A & B

DATA SHEET – A FOR CONTROL VALVE (WITH PNEUMATIC ACTUATOR) (TO BE FILLED BY PURCHASER)			DATA SHEET – B (TO BE FILLED UP BY BIDDER)
GENERAL*	PROJECT	**ROURKELA PP-II EX PROJECT (1X250 MW)**	.....
	SERVICE	**AUXILLARY STEAM TO D/A PEGGING**	.....
	LOCATION	[■] INDOOR [] OUTDOOR	.....
	DUTY	[] ON/OFF [■] MODULATING	.....
	PIPE SIZE (inlet / outlet)	**Ø 273X6.35 | Ø 457X9.53**	.....
	PIPE MATERIAL (inlet / outlet)	**SA 106 Gr B | SA 106 Gr B**	.....|.....
BODY*	MODEL NO.	BIDDER TO SPECIFY	.....
	TYPE OF BODY: GUIDING : NO. OF PORTS	[■] GLOBE [] ANGLE | [] TOP [■] CAGE | ONE	.....|.....|.....|.....
	BODY SIZE: PORT SIZE: DESIGN CV	BIDDER TO SPECIFY	.....|.....|.....
	END CONNECTION & RATING (ANSI)	[■] BWE [] SWE [] FLANGED	.....
	BODY MATERIAL	[■] A217 WC9 [] A217 WC6 [] SS [] A217 C5	.....
		[] A351 CF8M	.....
	PACKING: MATERIAL SINGLE / DOUBLE	[] PTFE [■] GRAFOIL [] DOUBLE [ζ] SINGLE	.....
	BONNET TYPE	[] STD [] EXTENDED [] FINNED	.....
	TRIM FORM	[] LINEAR [■] EQ. PERCENTAGE	.....
		[] QUICK OPEN (ON/OFF)	
	TRIM MATERIAL: SEAT | PLUG	SS 316 STELLITED | SS 316 STELLITED	.....|.....
	: CAGE | GUIDE BUSH	17-4 PH SS | SS 316 STELLITED	.....|.....
	FLOW	[] BELOW SEAT [] ABOVE SEAT	.....
	OUTLET VELOCITY	[] < 7 M/SEC (WATER) | [■] MAC NO. < 1/3	.....|.....
		(STM)	.....
	REQUIRED LEAKAGE CLASS	[] II [] III [■] IV [] V [] VI	.....
	NOISE LEVEL (dBA) (spec. 3.1.14)	LESS THAN 85 dBA	.....
	VACUUM SERVICE	[] YES [■] NO	.....
	ANTI CAVITATION TRIM	[] YES [■] NO	.....
PNEUMATIC ACTUATOR	MODEL NO. & SIZE	BIDDER TO SPECIFY	.....|.....
	CLOSE AT : OPEN AT (KG/CM2g)	1.0 | 0.2	.....|.....
	*TRAVEL TIME FOR	< 10 SEC	.....
	OPEN TO CLOSE, CLOSE TO OPEN	BIDDER TO SPECIFY	.....
	*VALVE POSN. ON SIGNAL AIR FAILURE	[■] TO OPEN [] STAYPUT [] TO CLOSE	.....
	*VALVE POSN. ON SUPPLY AIR FAILURE	[■] STAYPUT	.....
ACCESSORIES	POSITIONER (SMART)	[■] REQUIRED [] NOT REQUIRED	.....
	AIR FILTER REGULATOR	[■] REQUIRED [] NOT REQUIRED	.....
	AIR LOCK RELAY	[■] REQUIRED [] NOT REQUIRED	.....
	POSITION LIMIT SWITCH	[■] REQUIRED [] NOT REQUIRED	.....
	POSITION TRANSMITTER	PART OF POSITIONER	.....
	SOLENOID VALVE	[■] REQUIRED [] NOT REQUIRED	.....
	E/P CONVERTOR	PART OF POSITIONER	.....
	JUNCTION BOX	[■] REQUIRED [] NOT REQUIRED	.....
	HAND WHEEL (SIDE MOUNTED)	[■] REQUIRED	.....
	LOCAL POSITION INDICATOR	[■] REQUIRED	.....
	ELECTRO PNEUMATIC POSITIONER	[] REQUIRED [■] NOT REQUIRED	.....

Tag No.: **AS-2** Qty.: **ONE** Data Sheet No. PES-145-06-DS1-0

DATA SHEET – A & B

DATA SHEET – A FOR CONTROL VALVE (WITH PNEUMATIC ACTUATOR) (TO BE FILLED BY PURCHASER)			DATA SHEET – B (TO BE FILLED UP BY BIDDER)
PERFORMANCE OF VALVE	LINEARITY	± 2%	.....
	HYSTERISIS	± 1%	.....
	SENSITIVITY	± 0.5%	.....
	ACCURACY (OVERALL)	± 2%	.....

SERVICE CONDITION*

SL. No. +	LOAD	FLOW (T/HR)	INLET PR. KG/CM2(A)	OUTLET PR. KG/CM2(A)	TEMP DEG (C)	CALCU-LATED CV	% VALVE LIFT	VALVE O/L VELOCITY
1.0	**MIN.**	**5.0**	**11**	**1.5**	**310**			
2.0	**CASE-1**	**12**	**11**	**1.5**	**310**			
3.0	**MAX.**	**30**	**11**	**3.5**	**310**			

VALVE TYPE	[] CAVITATION [] FLASHING [] HIGH DP
* MAX SHUT OFF PRESS (KG/CM2g) **15** * BODY DESIGN : PRESS (KG/CM2g) | TEMP (DEG C) **15 | 350** * IBR FORM III-C [■] REQUIRED [] NOT REQUIRED	....|..... .....
TOTAL WEIGHT (VALVE + ACTUATOR + ACCESSORIES) Kg	.....

NOTES:

1.

Tag No.: **CD-11** Qty.: **ONE** Data Sheet No. PES-145-06-DS1-0

DATA SHEET – A & B

DATA SHEET – A FOR CONTROL VALVE (WITH PNEUMATIC ACTUATOR) (TO BE FILLED BY PURCHASER)			DATA SHEET – B (TO BE FILLED UP BY BIDDER)
GENERAL*	PROJECT	**ROURKELA PP-II EX PROJECT (1X250 MW)**	.....
	SERVICE	**MAIN CONDENATE CV 30%**	.....
	LOCATION	[■] INDOOR [] OUTDOOR	.....
	DUTY	[] ON/OFF [■] MODULATING	.....
	PIPE SIZE (inlet / outlet)	**Ø 114.3 X 6.02 | Ø 114.3 X 6.02**	.....
	PIPE MATERIAL (inlet / outlet)	**SA 106 Gr B | SA 106 Gr B**	.....|.....
BODY*	MODEL NO.	BIDDER TO SPECIFY	.....
	TYPE OF BODY: GUIDING : NO. OF PORTS	[■] GLOBE [] ANGLE | [] TOP [■] CAGE | ONE	.....|.....|.....|.....
	BODY SIZE: PORT SIZE: DESIGN CV	BIDDER TO SPECIFY	.....|.....|.....
	END CONNECTION & RATING (ANSI)	[■] BWE [] SWE [] FLANGED	.....
	BODY MATERIAL	[■] A216 WCB [] A217 WC6 [] SS [] A217 C5	.....
		[] A351 CF8M	.....
	PACKING: MATERIAL SINGLE / DOUBLE	[] PTFE [■] GRAFOIL [] DOUBLE [■] SINGLE	.....
	BONNET TYPE	[] STD [] EXTENDED [] FINNED	.....
	TRIM FORM	[] LINEAR [■] EQ. PERCENTAGE	.....
		[] QUICK OPEN (ON/OFF)	
	TRIM MATERIAL: SEAT | PLUG	SS 316 STELLITED | SS 316 STELLITED	.....|.....
	: CAGE | GUIDE BUSH	17-4 PH SS | SS 316 STELLITED	.....|.....
	FLOW	[] BELOW SEAT [] ABOVE SEAT	.....
	OUTLET VELOCITY	[■] < 7 M/SEC (WATER) | [] MAC NO. < 1/3	.....|.....
		(STM)	.....
	REQUIRED LEAKAGE CLASS	[] II [] III [■] IV [] V [] VI	.....
	NOISE LEVEL (dBA) (spec. 3.1.14)	LESS THAN 85 dBA	.....
	VACUUM SERVICE	[] YES [■] NO	.....
	ANTI CAVITATION TRIM	[] YES [■] NO	.....
PNEUMATIC ACTUATOR	MODEL NO. & SIZE	BIDDER TO SPECIFY	.....|.....
	CLOSE AT : OPEN AT (KG/CM2g)	1.0 | 0.2	.....|.....
	*TRAVEL TIME FOR	< 10 SEC	.....
	OPEN TO CLOSE, CLOSE TO OPEN	BIDDER TO SPECIFY |	.....
	*VALVE POSN. ON SIGNAL AIR FAILURE	[] TO OPEN [■] STAYPUT [] TO CLOSE	.....
	*VALVE POSN. ON SUPPLY AIR FAILURE	[■] STAYPUT	.....
ACCESSORIES	POSITIONER	[■] REQUIRED [] NOT REQUIRED	.....
	AIR FILTER REGULATOR	[■] REQUIRED [] NOT REQUIRED	.....
	AIR LOCK RELAY	[■] REQUIRED [] NOT REQUIRED	.....
	POSITION LIMIT SWITCH	[■] REQUIRED [] NOT REQUIRED	.....
	POSITION TRANSMITTER	PART OF POSITIONER	.....
	SOLENOID VALVE	[■] REQUIRED [] NOT REQUIRED	.....
	E/P CONVERTOR	PART OF POSITIONER	.....
	JUNCTION BOX	[■] REQUIRED [] NOT REQUIRED	.....
	HAND WHEEL (SIDE MOUNTED)	[■] REQUIRED	.....
	LOCAL POSITION INDICATOR	[■] REQUIRED	.....
	ELECTRO PNEUMATIC POSITIONER	[] REQUIRED [■] NOT REQUIRED	.....

Tag No.: **CD-11** Qty.: **ONE** Data Sheet No. PES-145-06-DS1-0

DATA SHEET – A & B

DATA SHEET – A FOR CONTROL VALVE (WITH PNEUMATIC ACTUATOR) (TO BE FILLED BY PURCHASER)			DATA SHEET – B (TO BE FILLED UP BY BIDDER)
PERFORMANCE OF VALVE	LINEARITY	± 2%	.....
	HYSTERISIS	± 1%	.....
	SENSITIVITY	± 0.5%	.....
	ACCURACY (OVERALL)	± 2%	.....

SERVICE CONDITION*

SL. No. +	LOAD	FLOW (T/HR)	INLET PR. KG/CM2(A)	OUTLET PR. KG/CM2(A)	TEMP DEG (C)	CALCU-LATED CV	% VALVE LIFT	VALVE O/L VELOCITY
1.	**MIN**	**55**	**17.45**	**3.5**	**48.5**			
1.	**30% MCR**	**215**	**17.29**	**6.59**	**48.5**			

VALVE TYPE	[] CAVITATION [] FLASHING [■] HIGH DP
* MAX SHUT OFF PRESS (KG/CM2g) **24** * BODY DESIGN : PRESS (KG/CM2g) | TEMP (DEG C) **24 | 60** * IBR FORM III-C [] REQUIRED [■] NOT REQUIRED	....|..... .....
TOTAL WEIGHT (VALVE + ACTUATOR + ACCESSORIES) Kg	.....

NOTES:

1.

Tag No.: **CD-14** Qty.: **ONE** Data Sheet No. PES-145-06-DS1-0

DATA SHEET – A & B

DATA SHEET – A FOR CONTROL VALVE (WITH PNEUMATIC ACTUATOR) (TO BE FILLED BY PURCHASER)			DATA SHEET – B (TO BE FILLED UP BY BIDDER)
GENERAL*	PROJECT	**ROURKELA PP-II EX PROJECT (1X250 MW)**	.....
	SERVICE	**MAIN CONDENATE CV 100%**	.....
	LOCATION	[■] INDOOR [] OUTDOOR	.....
	DUTY	[] ON/OFF [■] MODULATING	.....
	PIPE SIZE (inlet / outlet)	**Ø 323.9 X9.53 | Ø 323.9 X 9.53**	.....
	PIPE MATERIAL (inlet / outlet)	**SA 106 Gr B | SA 106 Gr B**	..... | .....
BODY*	MODEL NO.	BIDDER TO SPECIFY	.....
	TYPE OF BODY: GUIDING : NO. OF PORTS	[■] GLOBE [] ANGLE | [] TOP [■] CAGE | ONE	..... | ..... | ..... | .....
	BODY SIZE: PORT SIZE: DESIGN CV	BIDDER TO SPECIFY	..... | ..... | .....
	END CONNECTION & RATING (ANSI)	[■] BWE [] SWE [] FLANGED	.....
	BODY MATERIAL	[■] A216 WCB [] A217 WC6 [] SS [] A217 C5	.....
		[] A351 CF8M	.....
	PACKING: MATERIAL SINGLE / DOUBLE	[] PTFE [■] GRAFOIL [] DOUBLE [ζ] SINGLE	.....
	BONNET TYPE	[] STD [] EXTENDED [] FINNED	.....
	TRIM FORM	[] LINEAR [■] EQ. PERCENTAGE	.....
		[] QUICK OPEN (ON/OFF)	
	TRIM MATERIAL: SEAT | PLUG	SS 316 STELLITED | SS 316 STELLITED	..... | .....
	: CAGE | GUIDE BUSH	17-4 PH SS | SS 316 STELLITED	..... | .....
	FLOW	[] BELOW SEAT [] ABOVE SEAT	.....
	OUTLET VELOCITY	[■] < 7 M/SEC (WATER) | [] MAC NO. < 1/3	..... | .....
		(STM)	.....
	REQUIRED LEAKAGE CLASS	[] II [] III [■] IV [] V [] VI	.....
	NOISE LEVEL (dBA) (spec. 3.1.14)	LESS THAN 85 dBA	.....
	VACUUM SERVICE	[] YES [■] NO	.....
	ANTI CAVITATION TRIM	[] YES [■] NO	.....
PNEUMATIC ACTUATOR	MODEL NO. & SIZE	BIDDER TO APECIFY	..... | .....
	CLOSE AT : OPEN AT (KG/CM2g)	1.0 | 0.2	..... | .....
	*TRAVEL TIME FOR	< 10 SEC	.....
	OPEN TO CLOSE, CLOSE TO OPEN	BIDDER TO SPECIFY |	.....
	*VALVE POSN. ON SIGNAL AIR FAILURE	[] TO OPEN [■] STAYPUT [] TO CLOSE	.....
	*VALVE POSN. ON SUPPLY AIR FAILURE	[■] STAYPUT	.....
ACCESSORIES	POSITIONER	[■] REQUIRED [] NOT REQUIRED	.....
	AIR FILTER REGULATOR	[■] REQUIRED [] NOT REQUIRED	.....
	AIR LOCK RELAY	[■] REQUIRED [] NOT REQUIRED	.....
	POSITION LIMIT SWITCH	[■] REQUIRED [] NOT REQUIRED	.....
	POSITION TRANSMITTER	PART OF POSITIONER	.....
	SOLENOID VALVE	[■] REQUIRED [] NOT REQUIRED	.....
	E/P CONVERTOR	PART OF POSITIONER	.....
	JUNCTION BOX	[■] REQUIRED [] NOT REQUIRED	.....
	HAND WHEEL (SIDE MOUNTED)	[■] REQUIRED	.....
	LOCAL POSITION INDICATOR	[■] REQUIRED	.....
	ELECTRO PNEUMATIC POSITIONER	[] REQUIRED [■] NOT REQUIRED	.....

Tag No.: **CD-14** Qty.: **ONE** Data Sheet No. PES-145-06-DS1-0

DATA SHEET – A & B

DATA SHEET – A FOR CONTROL VALVE (WITH PNEUMATIC ACTUATOR) (TO BE FILLED BY PURCHASER)			DATA SHEET – B (TO BE FILLED UP BY BIDDER)
PERFORMANCE OF VALVE	LINEARITY	± 2%	.....
	HYSTERISIS	± 1%	.....
	SENSITIVITY	± 0.5%	.....
	ACCURACY (OVERALL)	± 2%	.....

SERVICE CONDITION*

SL. No. +	LOAD	FLOW (T/HR)	INLET PR. KG/CM2(A)	OUTLET PR. KG/CM2(A)	TEMP DEG (C)	CALCU-LATED CV	% VALVE LIFT	VALVE O/L VELOCITY
1.	MIN	55	17.5	3.5	48.5			
2.	60% MCR	374	16.8	8.2	47.6			
3.	100% MCR	590	15.4	13.0	50.2			
4.	VWO	636	14.85	13.9	47.1			

VALVE TYPE	[] CAVITATION [] FLASHING [■] HIGH DP
* MAX SHUT OFF PRESS (KG/CM2g) 24 * BODY DESIGN : PRESS (KG/CM2g) | TEMP (DEG C) 24 | 60 * IBR FORM III-C [] REQUIRED [■] NOT REQUIRED	....|..... .....
TOTAL WEIGHT (VALVE + ACTUATOR + ACCESSORIES) Kg	.....

NOTES:

1. VALVE CAPABILITY TO BE CHECKED FOR SERVICE CONDITION AT SL. NO. 4. VALVE CAN OPEN UPTO 95% AT THIS CONDITION.

Tag No.: **CD-21** Qty.: **ONE** Data Sheet No. PES-145-06-DS1-0

DATA SHEET – A & B

DATA SHEET – A FOR CONTROL VALVE (WITH PNEUMATIC ACTUATOR) (TO BE FILLED BY PURCHASER)			DATA SHEET – B (TO BE FILLED UP BY BIDDER)
GENERAL*	PROJECT	**ROURKELA PP-II EX PROJECT (1X250 MW)**	.....
	SERVICE	**EXCESS RETURN TO CST**	.....
	LOCATION	[■] INDOOR [] OUTDOOR	.....
	DUTY	[] ON/OFF [■] MODULATING	.....
	PIPE SIZE (inlet / outlet)	**Ø 168.3x7.11 | Ø 168.3x7.11**	.....
	PIPE MATERIAL (inlet / outlet)	**SA 106 Gr B | SA 106 Gr B**	..... | .....
BODY*	MODEL NO.	BIDDER TO SPECIFY	.....
	TYPE OF BODY: GUIDING : NO. OF PORTS	[■] GLOBE [] ANGLE | [] TOP [■] CAGE | ONE	..... | ..... | ..... | .....
	BODY SIZE: PORT SIZE: DESIGN CV	BIDDER TO SPECIFY	..... | ..... | .....
	END CONNECTION & RATING (ANSI)	[■] BWE [] SWE [] FLANGED	.....
	BODY MATERIAL	[■] A216 WCB [] A217 WC6 [] SS [] A217 C5	.....
		[] A351 CF8M	.....
	PACKING: MATERIAL SINGLE / DOUBLE	[] PTFE [■] GRAFOIL [] DOUBLE [■] SINGLE	.....
	BONNET TYPE	[] STD [] EXTENDED [] FINNED	.....
	TRIM FORM	[] LINEAR [■] EQ. PERCENTAGE	.....
		[] QUICK OPEN (ON/OFF)	
	TRIM MATERIAL: SEAT | PLUG	SS 316 STELLITED | SS 316 STELLITED	..... | .....
	: CAGE | GUIDE BUSH	17-4 PH SS | SS 316 STELLITED	..... | .....
	FLOW	[] BELOW SEAT [] ABOVE SEAT	.....
	OUTLET VELOCITY	[■] < 7 M/SEC (WATER) | [] MAC NO. < 1/3	..... | .....
		(STM)	.....
	REQUIRED LEAKAGE CLASS	[] II [] III [] IV [■] V [] VI	.....
	NOISE LEVEL (dBA) (spec. 3.1.14)	LESS THAN 85 dBA	.....
	VACUUM SERVICE	[] YES [■] NO	.....
	ANTI CAVITATION TRIM	[] YES [■] NO	.....
PNEUMATIC ACTUATOR	MODEL NO. & SIZE	BIDDER TO SPECIFY	..... | .....
	CLOSE AT : OPEN AT (KG/CM2g)	1.0 | 0.2	..... | .....
	*TRAVEL TIME FOR	< 10 SEC	.....
	OPEN TO CLOSE, CLOSE TO OPEN	BIDDER TO SPECIFY |	.....
	*VALVE POSN. ON SIGNAL AIR FAILURE	[■] TO OPEN [] STAYPUT [] TO CLOSE	.....
	*VALVE POSN. ON SUPPLY AIR FAILURE	[■] STAYPUT	.....
ACCESSORIES	POSITIONER	[■] REQUIRED [] NOT REQUIRED	.....
	AIR FILTER REGULATOR	[■] REQUIRED [] NOT REQUIRED	.....
	AIR LOCK RELAY	[■] REQUIRED [] NOT REQUIRED	.....
	POSITION LIMIT SWITCH	[■] REQUIRED [] NOT REQUIRED	.....
	POSITION TRANSMITTER	PART OF POSITIONER	.....
	SOLENOID VALVE	[■] REQUIRED [] NOT REQUIRED	.....
	E/P CONVERTOR	PART OF POSITIONER	.....
	JUNCTION BOX	[■] REQUIRED [] NOT REQUIRED	.....
	HAND WHEEL (SIDE MOUNTED)	[■] REQUIRED	.....
	LOCAL POSITION INDICATOR	[■] REQUIRED	.....
	ELECTRO PNEUMATIC POSITIONER	[] REQUIRED [■] NOT REQUIRED	.....

Tag No.: **CD-21** Qty.: **ONE** Data Sheet No. PES-145-06-DS1-0

DATA SHEET – A & B

DATA SHEET – A FOR CONTROL VALVE (WITH PNEUMATIC ACTUATOR) (TO BE FILLED BY PURCHASER)			DATA SHEET – B (TO BE FILLED UP BY BIDDER)
PERFORMANCE OF VALVE	LINEARITY	± 2%	.....
	HYSTERISIS	± 1%	.....
	SENSITIVITY	± 0.5%	.....
	ACCURACY (OVERALL)	± 2%	.....

SERVICE CONDITION*

SL. No. +	LOAD	FLOW (T/HR)	INLET PR. KG/CM2(A)	OUTLET PR. KG/CM2(A)	TEMP DEG (C)	CALCU-LATED CV	% VALVE LIFT	VALVE O/L VELOCITY
1.	**MINIMUM**	**20**	**26.5**	**1.1**	**47.1**			
2.	**MAXIMUM**	**270**	**19**	**1.5**	**47.1**			

VALVE TYPE	[] CAVITATION [] FLASHING [■] HIGH DP
* MAX SHUT OFF PRESS (KG/CM2g) **24** * BODY DESIGN : PRESS (KG/CM2g) | TEMP (DEG C) **24** | **60** * IBR FORM III-C [] REQUIRED [■] NOT REQUIRED	....|..... .....
TOTAL WEIGHT (VALVE + ACTUATOR + ACCESSORIES) Kg	.....

NOTES:

Tag No.: **CD-25** Qty.: **ONE** Data Sheet No. PES-145-06-DS1-0

DATA SHEET – A & B

DATA SHEET – A FOR CONTROL VALVE (WITH PNEUMATIC ACTUATOR) (TO BE FILLED BY PURCHASER)			DATA SHEET – B (TO BE FILLED UP BY BIDDER)
GENERAL*	PROJECT SERVICE LOCATION DUTY PIPE SIZE (inlet / outlet) PIPE MATERIAL (inlet / outlet)	**ROURKELA PP-II EX PROJECT (1X250 MW)** **GSC & CEP MINIMUM RECIRCULATION** [■] INDOOR [] OUTDOOR [] ON/OFF [■] MODULATING **Ø 219.1 X 6.35 | Ø 219.1 X 6.35** **SA 106 Gr B | SA 106 Gr B**	....|.....
BODY*	MODEL NO. TYPE OF BODY: GUIDING : NO. OF PORTS BODY SIZE: PORT SIZE: DESIGN CV END CONNECTION & RATING (ANSI) BODY MATERIAL PACKING: MATERIAL SINGLE / DOUBLE BONNET TYPE TRIM FORM TRIM MATERIAL: SEAT | PLUG : CAGE | GUIDE BUSH FLOW OUTLET VELOCITY REQUIRED LEAKAGE CLASS NOISE LEVEL (dBA) (spec. 3.1.14) VACUUM SERVICE ANTI CAVITATION TRIM	BIDDER TO SPECIFY [] GLOBE [■] ANGLE | [] TOP [■] CAGE | ONE BIDDER TO SPECIFY [■] BWE [] SWE [] FLANGED [] A216 WCB [■] A217 WC6 [] SS [] A217 C5 [] A351 CF8M [] PTFE [■] GRAFOIL [■] DOUBLE [] SINGLE [] STD [] EXTENDED [] FINNED [■] LINEAR [] EQ. PERCENTAGE [] QUICK OPEN (ON/OFF) SS 316 STELLITED | SS 316 STELLITED 17-4 PH SS | SS 316 STELLITED [] BELOW SEAT [] ABOVE SEAT [■] < 7 M/SEC (WATER) | [] MAC NO. < 1/3 (STM) [] II [] III [] IV [■] V [] VI LESS THAN 85 dBA [■] YES [] NO [■] YES [] NO	....|.....|.....|..... .....|.....|..... ....|..... .....|..... ....|..... ....
PNEUMATIC ACTUATOR	MODEL NO. & SIZE CLOSE AT : OPEN AT (KG/CM2g) *TRAVEL TIME FOR OPEN TO CLOSE, CLOSE TO OPEN *VALVE POSN. ON SIGNAL AIR FAILURE *VALVE POSN. ON SUPPLY AIR FAILURE	BIDDER TO SPECIFY 1.0 | .02 < 10 SEC BIDDER TO SPECIFY | [■] TO OPEN [] STAYPUT [] TO CLOSE [■] STAYPUT	.....|..... .....|..... ....
ACCESSORIES	POSITIONER AIR FILTER REGULATOR AIR LOCK RELAY POSITION LIMIT SWITCH POSITION TRANSMITTER SOLENOID VALVE E/P CONVERTOR JUNCTION BOX HAND WHEEL (SIDE MOUNTED) LOCAL POSITION INDICATOR ELECTRO PNEUMATIC POSITIONER	[■] REQUIRED [] NOT REQUIRED [■] REQUIRED [] NOT REQUIRED [■] REQUIRED [] NOT REQUIRED [■] REQUIRED [] NOT REQUIRED PART OF POSITIONER [■] REQUIRED [] NOT REQUIRED PART OF POSITIONER [■] REQUIRED [] NOT REQUIRED [■] REQUIRED [■] REQUIRED [] REQUIRED [■] NOT REQUIRED	....

Tag No.: **CD-25** Qty.: **ONE** Data Sheet No. PES-145-06-DS1-0

DATA SHEET – A & B

DATA SHEET – A FOR CONTROL VALVE (WITH PNEUMATIC ACTUATOR) (TO BE FILLED BY PURCHASER)			DATA SHEET – B (TO BE FILLED UP BY BIDDER)
PERFORMANCE OF VALVE	LINEARITY	± 2%	.....
	HYSTERISIS	± 1%	.....
	SENSITIVITY	± 0.5%	.....
	ACCURACY (OVERALL)	± 2%	.....

SERVICE CONDITION*

SL. No. +	LOAD	FLOW (T/HR)	INLET PR. KG/CM2(A)	OUTLET PR. KG/CM2(A)	TEMP DEG (C)	CALCU-LATED CV	% VALVE LIFT	VALVE O/L VELOCITY
1.	**MINIMUM**	**22**	**16.1**	**0.2**	**47.1**			
2.	**MAXIMUM**	**220**	**14.9**	**0.2**	**47.1**			

VALVE TYPE	[■] CAVITATION [] FLASHING [■] HIGH DP
* MAX SHUT OFF PRESS (KG/CM2g) **24** * BODY DESIGN : PRESS (KG/CM2g) | TEMP (DEG C) **24 | 60** * IBR FORM III-C [] REQUIRED [■] NOT REQUIRED	....|..... .....
TOTAL WEIGHT (VALVE + ACTUATOR + ACCESSORIES) Kg	.....

NOTES:

Tag No.: **CD-71** Qty.: **ONE** Date Sheet No. PES-145-06-DS1-0

DATA SHEET – A & B

DATA SHEET – A FOR CONTROL VALVE (WITH PNEUMATIC ACTUATOR) (TO BE FILLED BY PURCHASER)			DATA SHEET – B (TO BE FILLED UP BY BIDDER)
GENERAL*	PROJECT	**ROURKELA PP-II EX PROJECT (1X250 MW)**	.....
	SERVICE	**CONDENSATE FOR VALVES GLAND SEALING**	.....
	LOCATION	[■] INDOOR [] OUTDOOR	.....
	DUTY	[] ON/OFF [■] MODULATING	.....
	PIPE SIZE (inlet / outlet)	**∅ 48.3 X 5.08 | ∅ 48.3 X 5.08**	.....
	PIPE MATERIAL (inlet / outlet)	**SA 106 Gr B | SA 106 Gr B**	..... | .....
BODY*	MODEL NO.	BIDDER TO SPECIFY	.....
	TYPE OF BODY: GUIDING : NO. OF PORTS	[■] GLOBE [] ANGLE | [] TOP [■] CAGE | ONE	..... | ..... | ..... | .....
	BODY SIZE: PORT SIZE: DESIGN CV	BIDDER TO SPECIFY	..... | ..... | .....
	END CONNECTION & RATING (ANSI)	[] BWE [■] SWE [] FLANGED	.....
	BODY MATERIAL	[■] A216 WCB [] A217 WC6 [] SS [] A217 CS	.....
		[] A351 CF8M	.....
	PACKING: MATERIAL SINGLE / DOUBLE	[] PTFE [■] GRAFOIL [] DOUBLE [■] SINGLE	.....
	BONNET TYPE	[] STD [] EXTENDED [] FINNED	.....
	TRIM FORM	[] LINEAR [■] EQ. PERCENTAGE	.....
		[] QUICK OPEN (ON/OFF)	
	TRIM MATERIAL: SEAT | PLUG	SS 316 STELLITED | SS 316 STELLITED	..... | .....
	: CAGE | GUIDE BUSH	17-4 PH SS | SS 316 STELLITED	..... | .....
	FLOW	[] BELOW SEAT [] ABOVE SEAT	.....
	OUTLET VELOCITY	[■] < 7 M/SEC (WATER) | [] MAC NO. < 1/3 (STM)	..... | .....
	REQUIRED LEAKAGE CLASS	[] II [] III [] IV [■] V [] VI	.....
	NOISE LEVEL (dBA) (spec. 3.1.14)	LESS THAN 85 dBA	.....
	VACUUM SERVICE	[] YES [■] NO	.....
	ANTI CAVITATION TRIM	[] YES [■] NO	.....
PNEUMATIC ACTUATOR	MODEL NO. & SIZE	BIDDER TO SPECIFY	..... | .....
	CLOSE AT : OPEN AT (KG/CM2g)	0.2 | 1.0	..... | .....
	*TRAVEL TIME FOR	< 10 SEC	.....
	OPEN TO CLOSE, CLOSE TO OPEN	BIDDER TO SPECIFY |	.....
	*VALVE POSN. ON SIGNAL AIR FAILURE	[] TO OPEN [] STAYPUT [■] TO CLOSE	.....
	*VALVE POSN. ON SUPPLY AIR FAILURE	[■] STAYPUT	.....
ACCESSORIES	POSITIONER	[■] REQUIRED [] NOT REQUIRED	.....
	AIR FILTER REGULATOR	[■] REQUIRED [] NOT REQUIRED	.....
	AIR LOCK RELAY	[■] REQUIRED [] NOT REQUIRED	.....
	POSITION LIMIT SWITCH	[■] REQUIRED [] NOT REQUIRED	.....
	POSITION TRANSMITTER	PART OF POSITIONER	.....
	SOLENOID VALVE	[■] REQUIRED [] NOT REQUIRED	.....
	E/P CONVERTOR	PART OF POSITIONER	.....
	JUNCTION BOX	[■] REQUIRED [] NOT REQUIRED	.....
	HAND WHEEL (SIDE MOUNTED)	[■] REQUIRED	.....
	LOCAL POSITION INDICATOR	[■] REQUIRED	.....
	ELECTRO PNEUMATIC POSITIONER	[] REQUIRED [■] NOT REQUIRED	.....

Tag No.: **CD-71** Qty.: **ONE** Date Sheet No. PES-145-06-DS1-0

DATA SHEET – A & B

DATA SHEET – A FOR CONTROL VALVE (WITH PNEUMATIC ACTUATOR) (TO BE FILLED BY PURCHASER)			DATA SHEET – B (TO BE FILLED UP BY BIDDER)
PERFORMANCE OF VALVE	LINEARITY HYSTERISIS SENSITIVITY ACCURACY (OVERALL)	± 2% ± 1% ± 0.5% ± 2%	....

SERVICE CONDITION*

SL. No. +	LOAD	FLOW (T/HR)	INLET PR. KG/CM2(A)	OUTLET PR. KG/CM2(A)	TEMP DEG (C)	CALCU-LATED CV	% VALVE LIFT	VALVE O/L VELOCITY
1.	**MINIMUM**	**4.0**	**16.1**	**3.5**	**47.1**			
2.	**MAXIMUM**	**4.0**	**14.9**	**3.5**	**47.1**			

VALVE TYPE	[] CAVITATION [] FLASHING [■] HIGH DP
* MAX SHUT OFF PRESS (KG/CM2g) **24** * BODY DESIGN : PRESS (KG/CM2g) | TEMP (DEG C) **24 | 60** * IBR FORM III-C [] REQUIRED [■] NOT REQUIRED	....|..... .....
TOTAL WEIGHT (VALVE + ACTUATOR + ACCESSORIES) Kg	.....

Tag No.: **CRH-2** Qty.: **ONE** Data Sheet No. PES-145-06-DS1-0

DATA SHEET – A & B

DATA SHEET – A FOR CONTROL VALVE (WITH PNEUMATIC ACTUATOR) (TO BE FILLED BY PURCHASER)			DATA SHEET – B (TO BE FILLED UP BY BIDDER)
GENERAL*	PROJECT SERVICE LOCATION DUTY PIPE SIZE (inlet / outlet) PIPE MATERIAL (inlet / outlet)	**ROURKELA PP-II EX PROJECT (1X250 MW)** **CRH STEAM TO DEAERATOR PEGGING** [■] INDOOR [] OUTDOOR [] ON/OFF [■] MODULATING **Ø 273 X 9.27 | Ø 508 X 12.7** **SA 106 Gr C | SA 106 Gr B**	....|.....
BODY*	MODEL NO. TYPE OF BODY: GUIDING: NO. OF PORTS BODY SIZE: PORT SIZE: DESIGN CV END CONNECTION & RATING (ANSI) BODY MATERIAL PACKING: MATERIAL SINGLE / DOUBLE BONNET TYPE TRIM FORM TRIM MATERIAL: SEAT | PLUG : CAGE | GUIDE BUSH FLOW OUTLET VELOCITY REQUIRED LEAKAGE CLASS NOISE LEVEL (dBA) (spec. 3.1.14) VACUUM SERVICE ANTI CAVITATION TRIM	BIDDER TO SPECIFY [■] GLOBE [] ANGLE | [] TOP [■] CAGE | ONE BIDDER TO SPECIFY [■] BWE [] SWE [] FLANGED [■] A217 WC9 [] A217 WC6 [] SS [] A217 C5 [] A351 CF8M [] PTFE [■] GRAFOIL [] DOUBLE [■] SINGLE [] STD [] EXTENDED [] FINNED [] LINEAR [■] EQ. PERCENTAGE [] QUICK OPEN (ON/OFF) SS 316 STELLITED | SS 316 STELLITED 17-4 PH SS | SS 316 STELLITED [] BELOW SEAT [] ABOVE SEAT [] < 7 M/SEC (WATER) | [■] MAC NO. < 1/3 (STM) [] II [] III [■] IV [] V [] VI LESS THAN 85 dBA [] YES [■] NO [] YES [■] NO	....|.....|.....|..... .....|.....|..... ....|..... .....|..... ....|..... ....
PNEUMATIC ACTUATOR	MODEL NO. & SIZE CLOSE AT : OPEN AT (KG/CM2g) *TRAVEL TIME FOR OPEN TO CLOSE, CLOSE TO OPEN *VALVE POSN. ON SIGNAL AIR FAILURE *VALVE POSN. ON SUPPLY AIR FAILURE	BIDDER TO SPECIFY 0.2 | 1.0 < 10 SEC BIDDER TO SPECIFY | [] TO OPEN [] STAYPUT [■] TO CLOSE [■] STAYPUT	.....|..... .....|..... ....
ACCESSORIES	POSITIONER AIR FILTER REGULATOR AIR LOCK RELAY POSITION LIMIT SWITCH POSITION TRANSMITTER SOLENOID VALVE E/P CONVERTOR JUNCTION BOX HAND WHEEL (SIDE MOUNTED) LOCAL POSITION INDICATOR ELECTRO PNEUMATIC POSITIONER	[■] REQUIRED [] NOT REQUIRED [■] REQUIRED [] NOT REQUIRED [■] REQUIRED [] NOT REQUIRED [■] REQUIRED [] NOT REQUIRED PART OF POSITIONER [■] REQUIRED [] NOT REQUIRED PART OF POSITIONER [■] REQUIRED [] NOT REQUIRED [■] REQUIRED [■] REQUIRED [] REQUIRED [■] NOT REQUIRED	....

	DATA SHEET FOR CONTROL VALVES (WITH PNEUMATIC ACTUATOR)	SPECIFICATION NO.: PE-TS-427-145-I104	
		VOLUME	
		SECTION	
		REV. NO. 0	DATE : 11.11.16
		SHEET 16 OF 44	

Tag No.: **CRH-2** Qty.: **ONE** Data Sheet No. PES-145-06-DS1-0

DATA SHEET – A & B

DATA SHEET – A FOR CONTROL VALVE (WITH PNEUMATIC ACTUATOR) (TO BE FILLED BY PURCHASER)			DATA SHEET – B (TO BE FILLED UP BY BIDDER)
PERFORMANCE OF VALVE	LINEARITY HYSTERISIS SENSITIVITY ACCURACY (OVERALL)	± 2% ± 1% ± 0.5% ± 2%	....

SERVICE CONDITION*

SL. No. +	LOAD	FLOW (T/HR)	INLET PR. KG/CM2(A)	OUTLET PR. KG/CM2(A)	TEMP DEG (C)	CALCU-LATED CV	% VALVE LIFT	VALVE O/L VELOCITY
1.	**15% BMCR**	**15.6**	**10.15**	**3.65**	**230**			
2.	**60% BYPASS**	**68.25**	**24.89**	**3.65**	**330**			

VALVE TYPE	[] CAVITATION [] FLASHING [] HIGH DP
* MAX SHUT OFF PRESS (KG/CM2g) **47** * BODY DESIGN : PRESS (KG/CM2g) | TEMP (DEG C) **47 | 356** * IBR FORM III-C [■] REQUIRED [] NOT REQUIRED	....|..... .....
TOTAL WEIGHT (VALVE + ACTUATOR + ACCESSORIES) Kg	.....

NOTES:

Tag No.: **DR-2** Qty.: **ONE** Data Sheet No. PES-145-06-DS1-0

DATA SHEET – A & B

DATA SHEET – A FOR CONTROL VALVE (WITH PNEUMATIC ACTUATOR) (TO BE FILLED BY PURCHASER)			DATA SHEET – B (TO BE FILLED UP BY BIDDER)
GENERAL*	PROJECT	**ROURKELA PP-II EX PROJECT (1X250 MW)**	.....
	SERVICE	**HPH-6 NORMAL DRAIN TO HPH-5**	.....
	LOCATION	[■] INDOOR [] OUTDOOR	.....
	DUTY	[] ON/OFF [■] MODULATING	.....
	PIPE SIZE (inlet / outlet)	**Ø 168.3 X 7.11 | Ø 168.3 X 7.11**	.....
	PIPE MATERIAL (inlet / outlet)	**SA 106 Gr B | SA 106 Gr B**	.....|.....
BODY*	MODEL NO.	BIDDER TO SPECIFY	.....
	TYPE OF BODY: GUIDING : NO. OF PORTS	[■] GLOBE [] ANGLE | [] TOP [■] CAGE | ONE	.....|.....|.....|.....
	BODY SIZE: PORT SIZE: DESIGN CV	BIDDER TO SPECIFY	.....|.....|.....
	END CONNECTION & RATING (ANSI)	[■] BWE [] SWE [] FLANGED	.....
	BODY MATERIAL	[] A216 WCB [■] A217 WC6 [] SS [] A217 C5	.....
		[] A351 CF8M	.....
	PACKING: MATERIAL SINGLE / DOUBLE	[] PTFE [■] GRAFOIL [] DOUBLE [ζ] SINGLE	.....
	BONNET TYPE	[] STD [] EXTENDED [] FINNED	.....
	TRIM FORM	[■] LINEAR [] EQ. PERCENTAGE	.....
		[] QUICK OPEN (ON/OFF)	
	TRIM MATERIAL: SEAT | PLUG	SS 316 STELLITED | SS 316 STELLITED	.....|.....
	: CAGE | GUIDE BUSH	17-4 PH SS | SS 316 STELLITED	.....|.....
	FLOW	[] BELOW SEAT [] ABOVE SEAT	.....
	OUTLET VELOCITY	[■] < 7 M/SEC (WATER) | [] MAC NO. < 1/3 (STM)	.....|.....
	REQUIRED LEAKAGE CLASS	[] II [] III [■] IV [] V [] VI	.....
	NOISE LEVEL (dBA) (spec. 3.1.14)	LESS THAN 85 dBA	.....
	VACUUM SERVICE	[] YES [■] NO	.....
	ANTI CAVITATION TRIM	[] YES [■] NO	.....
PNEUMATIC ACTUATOR	MODEL NO. & SIZE	BIDDER TO SPECIFY	.....|.....
	CLOSE AT : OPEN AT (KG/CM2g)	0.2 | 1.0	.....|.....
	*TRAVEL TIME FOR	< 10 SEC	.....
	OPEN TO CLOSE, CLOSE TO OPEN	BIDDER TO SPECIFY |	.....
	*VALVE POSN. ON SIGNAL AIR FAILURE	[] TO OPEN [] STAYPUT [■] TO CLOSE	.....
	*VALVE POSN. ON SUPPLY AIR FAILURE	[] STAYPUT [■] TO CLOSE	.....
ACCESSORIES	POSITIONER	[■] REQUIRED [] NOT REQUIRED	.....
	AIR FILTER REGULATOR	[■] REQUIRED [] NOT REQUIRED	.....
	AIR LOCK RELAY	[■] REQUIRED [] NOT REQUIRED	.....
	POSITION LIMIT SWITCH	[■] REQUIRED [] NOT REQUIRED	.....
	POSITION TRANSMITTER	PART OF POSITIONER	.....
	SOLENOID VALVE	[■] REQUIRED [] NOT REQUIRED	.....
	E/P CONVERTOR	PART OF POSITIONER	.....
	JUNCTION BOX	[■] REQUIRED [] NOT REQUIRED	.....
	HAND WHEEL (SIDE MOUNTED)	[■] REQUIRED	.....
	LOCAL POSITION INDICATOR	[■] REQUIRED	.....
	ELECTRO PNEUMATIC POSITIONER	[] REQUIRED [■] NOT REQUIRED	.....

Tag No.: **DR-2** Qty.: **ONE** Data Sheet No. PES-145-06-DS1-0

DATA SHEET – A & B

DATA SHEET – A FOR CONTROL VALVE (WITH PNEUMATIC ACTUATOR) (TO BE FILLED BY PURCHASER)			DATA SHEET – B (TO BE FILLED UP BY BIDDER)
PERFORMANCE OF VALVE	LINEARITY	± 2%	.....
	HYSTERISIS	± 1%	.....
	SENSITIVITY	± 0.5%	.....
	ACCURACY (OVERALL)	± 2%	.....

SERVICE CONDITION*

SL. No. +	LOAD	FLOW (T/HR)	INLET PR. KG/CM2(A)	OUTLET PR. KG/CM2(A)	TEMP DEG (C)	CALCU-LATED CV	% VALVE LIFT	VALVE O/L VELOCITY
1.	VWO	80.32	39.5	15.7	204.4			
2.	100%	73.1	38.0	15.18	202.7			
3.	60%	37.99	24.33	9.73	182.7			
4.	30%	16.65	13.01	5.61	157.9			

VALVE TYPE	[] CAVITATION [■] FLASHING [] HIGH DP
* MAX SHUT OFF PRESS (KG/CM2g) 47 * BODY DESIGN : PRESS (KG/CM2g) | TEMP (DEG C) 47 | 215 * IBR FORM III-C [■] REQUIRED [] NOT REQUIRED	....|..... .....
TOTAL WEIGHT (VALVE + ACTUATOR + ACCESSORIES) Kg	.....

NOTES:

Tag No.: **DR-6** Qty.: **ONE** Data Sheet No. PES-145-06-DS1-0

DATA SHEET – A & B

DATA SHEET – A FOR CONTROL VALVE (WITH PNEUMATIC ACTUATOR) (TO BE FILLED BY PURCHASER)			DATA SHEET – B (TO BE FILLED UP BY BIDDER)
GENERAL*	PROJECT	**ROURKELA PP-II EX PROJECT (1X250 MW)**	.....
	SERVICE	**HPH-6 ALT DRAIN TO DEAERATOR**	.....
	LOCATION	[■] INDOOR [] OUTDOOR	.....
	DUTY	[] ON/OFF [■] MODULATING	.....
	PIPE SIZE (inlet / outlet)	**Ø 219.1 X 8.18 | Ø 219.1 X 8.18**	.....
	PIPE MATERIAL (inlet / outlet)	**SA 106 Gr C | SA 106 Gr C**	.....|.....
BODY*	MODEL NO.	BIDDER TO SPECIFY	.....
	TYPE OF BODY: GUIDING : NO. OF PORTS	[■] GLOBE [] ANGLE | [] TOP [■] CAGE | ONE	.....|.....|.....|.....
	BODY SIZE: PORT SIZE: DESIGN CV	BIDDER TO SPECIFY	.....|.....|.....
	END CONNECTION & RATING (ANSI)	[■] BWE [] SWE [] FLANGED	.....
	BODY MATERIAL	[] A216 WCB [] A217 WC6 [] SS [■] A217 C5	.....
		[] A351 CF8M	.....
	PACKING: MATERIAL SINGLE / DOUBLE	[] PTFE [■] GRAFOIL [] DOUBLE [■] SINGLE	.....
	BONNET TYPE	[] STD [] EXTENDED [] FINNED	.....
	TRIM FORM	[■] LINEAR [] EQ. PERCENTAGE	.....
		[] QUICK OPEN (ON/OFF)	
	TRIM MATERIAL: SEAT | PLUG	SS 316 STELLITED | SS 316 STELLITED	.....|.....
	: CAGE | GUIDE BUSH	17-4 PH SS | SS 316 STELLITED	.....|.....
	FLOW	[] BELOW SEAT [] ABOVE SEAT	.....
	OUTLET VELOCITY	[■] < 7 M/SEC (WATER) | [] MAC NO. < 1/3	.....|.....
		(STM)	.....
	REQUIRED LEAKAGE CLASS	[] II [] III [] IV [■] V [] VI	.....
	NOISE LEVEL (dBA) (spec. 3.1.14)	LESS THAN 85 dBA	.....
	VACUUM SERVICE	[] YES [■] NO	.....
	ANTI CAVITATION TRIM	[] YES [■] NO	.....
PNEUMATIC ACTUATOR	MODEL NO. & SIZE	BIDDER TO SPECIFY	.....|.....
	CLOSE AT : OPEN AT (KG/CM2g)	1.0 | 0.2	.....|.....
	*TRAVEL TIME FOR	< 10 SEC	.....
	OPEN TO CLOSE, CLOSE TO OPEN	BIDDER TO SPECIFY |	.....
	*VALVE POSN. ON SIGNAL AIR FAILURE	[■] TO OPEN [] STAYPUT [] TO CLOSE	.....
	*VALVE POSN. ON SUPPLY AIR FAILURE	[■] STAYPUT [■] TO OPEN	.....
ACCESSORIES	POSITIONER	[■] REQUIRED [] NOT REQUIRED	.....
	AIR FILTER REGULATOR	[■] REQUIRED [] NOT REQUIRED	.....
	AIR LOCK RELAY	[■] REQUIRED [] NOT REQUIRED	.....
	POSITION LIMIT SWITCH	[■] REQUIRED [] NOT REQUIRED	.....
	POSITION TRANSMITTER	PART OF POSITIONER	.....
	SOLENOID VALVE	[■] REQUIRED [] NOT REQUIRED	.....
	E/P CONVERTOR	PART OF POSITIONER	.....
	JUNCTION BOX	[■] REQUIRED [] NOT REQUIRED	.....
	HAND WHEEL (SIDE MOUNTED)	[■] REQUIRED	.....
	LOCAL POSITION INDICATOR	[■] REQUIRED	.....
	ELECTRO PNEUMATIC POSITIONER	[] REQUIRED [■] NOT REQUIRED	.....

Tag No.: **DR-6** Qty.: **ONE** Data Sheet No. PES-145-06-DS1-0

DATA SHEET – A & B

DATA SHEET – A FOR CONTROL VALVE (WITH PNEUMATIC ACTUATOR) (TO BE FILLED BY PURCHASER)			DATA SHEET – B (TO BE FILLED UP BY BIDDER)
PERFORMANCE OF VALVE	LINEARITY	± 2%	.....
	HYSTERISIS	± 1%	.....
	SENSITIVITY	± 0.5%	.....
	ACCURACY (OVERALL)	± 2%	.....

SERVICE CONDITION*

SL. No. +	LOAD	FLOW (T/HR)	INLET PR. KG/CM2(A)	OUTLET PR. KG/CM2(A)	TEMP DEG (C)	CALCU-LATED CV	% VALVE LIFT	VALVE O/L VELOCITY
1.	VWO	80.32	38.58	6.4	204.4			
2.	100%	73.1	37.12	6.23	202.7			
3.	60%	37.99	23.38	4.07	182.7			
4.	30%	16.65	12.03	3.65	157.9			
5.	MAX	100	38.58	6.4	204.4			

VALVE TYPE	[] CAVITATION [■] FLASHING [] HIGH DP
* MAX SHUT OFF PRESS (KG/CM2g) 47 * BODY DESIGN : PRESS (KG/CM2g) | TEMP (DEG C) 47 | 215 * IBR FORM III-C [■] REQUIRED [] NOT REQUIRED	....|..... .....
TOTAL WEIGHT (VALVE + ACTUATOR + ACCESSORIES) Kg	.....

NOTES:

1. * TO BE FILLED BY MSE

2. VALVE CAPABILITY TO BE CHECKED FOR SERVICE CONDITION AT SL. NO.5. VALVE CAN OPEN UPTO 95% AT THIS CONDITION.

Tag No.: **DR-9** Qty.: **ONE** Data Sheet No. PES-145-06-DS1-0

DATA SHEET – A & B

DATA SHEET – A FOR CONTROL VALVE (WITH PNEUMATIC ACTUATOR) (TO BE FILLED BY PURCHASER)			DATA SHEET – B (TO BE FILLED UP BY BIDDER)
GENERAL*	PROJECT	**ROURKELA PP-II EX PROJECT (1X250 MW)**	.....
	SERVICE	**HPH-6 ALT DRAIN TO HP FLASH TANK**	.....
	LOCATION	[■] INDOOR [] OUTDOOR	.....
	DUTY	[] ON/OFF [■] MODULATING	.....
	PIPE SIZE (inlet / outlet)	**∅ 219.1 X 8.18 | ∅ 273 X 9.27**	.....
	PIPE MATERIAL (inlet / outlet)	**SA 106 Gr C | SA 106 Gr B**	.....|.....
BODY*	MODEL NO.	BIDDER TO SPECIFY	.....
	TYPE OF BODY: GUIDING : NO. OF PORTS	[■] GLOBE [] ANGLE | [] TOP [■] CAGE | ONE	.....|.....|.....|.....
	BODY SIZE: PORT SIZE: DESIGN CV	BIDDER TO SPECIFY	.....|.....|.....
	END CONNECTION & RATING (ANSI)	[■] BWE [] SWE [] FLANGED	.....
	BODY MATERIAL	[] A216 WCB [] A217 WC6 [] SS [■] A217 C5	.....
		[] A351 CF8M	.....
	PACKING: MATERIAL SINGLE / DOUBLE	[] PTFE [■] GRAFOIL [■] DOUBLE [] SINGLE	.....
	BONNET TYPE	[] STD [] EXTENDED [] FINNED	.....
	TRIM FORM	[■] LINEAR [] EQ. PERCENTAGE	.....
		[] QUICK OPEN (ON/OFF)	
	TRIM MATERIAL: SEAT | PLUG	SS 316 STELLITED | SS 316 STELLITED	.....|.....
	: CAGE | GUIDE BUSH	17-4 PH SS | SS 316 STELLITED	.....|.....
	FLOW	[] BELOW SEAT [] ABOVE SEAT	.....
	OUTLET VELOCITY	[■] < 7 M/SEC (WATER) | [] MAC NO. < 1/3	.....|.....
		(STM)	.....
	REQUIRED LEAKAGE CLASS	[] II [] III [] IV [■] V [] VI	.....
	NOISE LEVEL (dBA) (spec. 3.1.14)	LESS THAN 85 dBA	.....
	VACUUM SERVICE	[■] YES [] NO	.....
	ANTI CAVITATION TRIM	[] YES [■] NO	.....
PNEUMATIC ACTUATOR	MODEL NO. & SIZE	BIDDER TO SPECIFY	.....|.....
	CLOSE AT : OPEN AT (KG/CM2g)	1.0 | 0.2	.....|.....
	*TRAVEL TIME FOR	< 10 SEC	.....
	OPEN TO CLOSE, CLOSE TO OPEN	BIDDER TO SPECIFY |	.....
	*VALVE POSN. ON SIGNAL AIR FAILURE	[■] TO OPEN [] STAYPUT [] TO CLOSE	.....
	*VALVE POSN. ON SUPPLY AIR FAILURE	[■] STAYPUT [■] TO OPEN	.....
ACCESSORIES	POSITIONER	[■] REQUIRED [] NOT REQUIRED	.....
	AIR FILTER REGULATOR	[■] REQUIRED [] NOT REQUIRED	.....
	AIR LOCK RELAY	[■] REQUIRED [] NOT REQUIRED	.....
	POSITION LIMIT SWITCH	[■] REQUIRED [] NOT REQUIRED	.....
	POSITION TRANSMITTER	PART OF POSITIONER	.....
	SOLENOID VALVE	[■] REQUIRED [] NOT REQUIRED	.....
	E/P CONVERTOR	PART OF POSITIONER	.....
	JUNCTION BOX	[■] REQUIRED [] NOT REQUIRED	.....
	HAND WHEEL (SIDE MOUNTED)	[■] REQUIRED	.....
	LOCAL POSITION INDICATOR	[■] REQUIRED	.....
	ELECTRO PNEUMATIC POSITIONER	[] REQUIRED [■] NOT REQUIRED	.....

Tag No.: **DR-9** Qty.: **ONE** Data Sheet No. PES-145-06-DS1-0

DATA SHEET – A & B

DATA SHEET – A FOR CONTROL VALVE (WITH PNEUMATIC ACTUATOR) (TO BE FILLED BY PURCHASER)			DATA SHEET – B (TO BE FILLED UP BY BIDDER)
PERFORMANCE OF VALVE	LINEARITY	± 2%	.....
	HYSTERISIS	± 1%	.....
	SENSITIVITY	± 0.5%	.....
	ACCURACY (OVERALL)	± 2%	.....

SERVICE CONDITION*

SL. No. +	LOAD	FLOW (T/HR)	INLET PR. KG/CM2(A)	OUTLET PR. KG/CM2(A)	TEMP DEG (C)	CALCU-LATED CV	% VALVE LIFT	VALVE O/L VELOCITY
1.	VWO	80.32	40.45	0.2	204.4			
2.	100%	73.1	38.99	0.2	202.7			
3.	60%	37.99	25.29	0.2	182.7			
4.	30%	16.65	14	0.2	157.9			
5.	MAX	100	40.45	0.2	204.4			

VALVE TYPE	[] CAVITATION [■] FLASHING [] HIGH DP
* MAX SHUT OFF PRESS (KG/CM2g) 47/VAC * BODY DESIGN : PRESS (KG/CM2g) | TEMP (DEG C) 47/VAC | 215 * IBR FORM III-C [■] REQUIRED [] NOT REQUIRED	....|..... .....
TOTAL WEIGHT (VALVE + ACTUATOR + ACCESSORIES) Kg	.....

NOTES:

1. VALVE CAPABILITY TO BE CHECKED FOR SERVICE CONDITION AT SL. NO. 5. VALVE CAN OPEN UPTO 95% AT THIS CONDITION.

Tag No.: **DR-13** Qty.: **ONE** Data Sheet No. PES-145-06-DS1-0

DATA SHEET – A & B

DATA SHEET – A FOR CONTROL VALVE (WITH PNEUMATIC ACTUATOR) (TO BE FILLED BY PURCHASER)			DATA SHEET – B (TO BE FILLED UP BY BIDDER)
GENERAL*	PROJECT	**ROURKELA PP-II EX PROJECT (1X250 MW)**	.....
	SERVICE	**HPH-5 DRAIN TO DEAERATOR**	.....
	LOCATION	[■] INDOOR [] OUTDOOR	.....
	DUTY	[] ON/OFF [■] MODULATING	.....
	PIPE SIZE (inlet / outlet)	**Ø 219.1 X 6.35 | Ø 219.1 X 6.35**	.....
	PIPE MATERIAL (inlet / outlet)	**SA 106 Gr B | SA 106 Gr B**	.....|.....
BODY*	MODEL NO.	BIDDER TO SPECIFY	.....
	TYPE OF BODY: GUIDING : NO. OF PORTS	[■] GLOBE [] ANGLE | [] TOP [■] CAGE | ONE	.....|.....|.....|.....
	BODY SIZE: PORT SIZE: DESIGN CV	BIDDER TO SPECIFY	.....|.....|.....
	END CONNECTION & RATING (ANSI)	[■] BWE [] SWE [] FLANGED	.....
	BODY MATERIAL	[] A216 WCB [■] A217 WC6 [] SS [] A217 C5	.....
		[] A351 CF8M	.....
	PACKING: MATERIAL SINGLE / DOUBLE	[] PTFE [■] GRAFOIL [] DOUBLE [ζ] SINGLE	.....
	BONNET TYPE	[] STD [] EXTENDED [] FINNED	.....
	TRIM FORM	[■] LINEAR [] EQ. PERCENTAGE	.....
		[] QUICK OPEN (ON/OFF)	
	TRIM MATERIAL: SEAT | PLUG	SS 316 STELLITED | SS 316 STELLITED	.....|.....
	: CAGE | GUIDE BUSH	17-4 PH SS | SS 316 STELLITED	.....|.....
	FLOW	[] BELOW SEAT [] ABOVE SEAT	.....
	OUTLET VELOCITY	[■] < 7 M/SEC (WATER) | [] MAC NO. < 1/3	.....|.....
		(STM)	.....
	REQUIRED LEAKAGE CLASS	[] II [] III [■] IV [] V [] VI	.....
	NOISE LEVEL (dBA) (spec. 3.1.14)	LESS THAN 85 dBA	.....
	VACUUM SERVICE	[] YES [■] NO	.....
	ANTI CAVITATION TRIM	[] YES [■] NO	.....
PNEUMATIC ACTUATOR	MODEL NO. & SIZE	BIDDER TO SPECIFY	.....|.....
	CLOSE AT : OPEN AT (KG/CM2g)	0.2 | 1.0	.....|.....
	*TRAVEL TIME FOR	< 10 SEC	.....
	OPEN TO CLOSE, CLOSE TO OPEN	BIDDER TO SPECIFY |	.....
	*VALVE POSN. ON SIGNAL AIR FAILURE	[] TO OPEN [] STAYPUT [■] TO CLOSE	.....
	*VALVE POSN. ON SUPPLY AIR FAILURE	[] STAYPUT [■] TO CLOSE	.....
ACCESSORIES	POSITIONER	[■] REQUIRED [] NOT REQUIRED	.....
	AIR FILTER REGULATOR	[■] REQUIRED [] NOT REQUIRED	.....
	AIR LOCK RELAY	[■] REQUIRED [] NOT REQUIRED	.....
	POSITION LIMIT SWITCH	[■] REQUIRED [] NOT REQUIRED	.....
	POSITION TRANSMITTER	PART OF POSITIONER	.....
	SOLENOID VALVE	[■] REQUIRED [] NOT REQUIRED	.....
	E/P CONVERTOR	PART OF POSITIONER	.....
	JUNCTION BOX	[■] REQUIRED [] NOT REQUIRED	.....
	HAND WHEEL (SIDE MOUNTED)	[■] REQUIRED	.....
	LOCAL POSITION INDICATOR	[■] REQUIRED	.....
	ELECTRO PNEUMATIC POSITIONER	[] REQUIRED [■] NOT REQUIRED	.....

Tag No.: **DR-13** Qty.: **ONE** Data Sheet No. PES-145-06-DS1-0

DATA SHEET – A & B

DATA SHEET – A FOR CONTROL VALVE (WITH PNEUMATIC ACTUATOR) (TO BE FILLED BY PURCHASER)			DATA SHEET – B (TO BE FILLED UP BY BIDDER)
PERFORMANCE OF VALVE	LINEARITY	± 2%	.....
	HYSTERISIS	± 1%	.....
	SENSITIVITY	± 0.5%	.....
	ACCURACY (OVERALL)	± 2%	.....

SERVICE CONDITION*

SL. No. +	LOAD	FLOW (T/HR)	INLET PR. KG/CM2(A)	OUTLET PR. KG/CM2(A)	TEMP DEG (C)	CALCU-LATED CV	% VALVE LIFT	VALVE O/L VELOCITY
1.	VWO	124	14.75	6.4	168.3			
2.	100%	113.3	14.2	6.23	168.8			
3.	60%	61.2	8.73	4.07	148.5			
4.	30%	21.5	4.6	3.65	143.9			

VALVE TYPE	[] CAVITATION [■] FLASHING [] HIGH DP
* MAX SHUT OFF PRESS (KG/CM2g) 19 * BODY DESIGN : PRESS (KG/CM2g) | TEMP (DEG C) 19 | 175 * IBR FORM III-C [■] REQUIRED [] NOT REQUIRED	....|..... .....
TOTAL WEIGHT (VALVE + ACTUATOR + ACCESSORIES) Kg	.....

NOTES:

Tag No.: **DR-16** Qty.: **ONE** Data Sheet No. PES-145-06-DS1-0

DATA SHEET – A & B

DATA SHEET – A FOR CONTROL VALVE (WITH PNEUMATIC ACTUATOR) (TO BE FILLED BY PURCHASER)			DATA SHEET – B (TO BE FILLED UP BY BIDDER)
GENERAL*	PROJECT	**ROURKELA PP-II EX PROJECT (1X250 MW)**	.....
	SERVICE	**HPH-5 ALT DRAIN TO HP FLASH TANK**	.....
	LOCATION	[■] INDOOR [] OUTDOOR	.....
	DUTY	[] ON/OFF [■] MODULATING	.....
	PIPE SIZE (inlet / outlet)	**Ø 219.1 X 6.35 | Ø 273 X 9.27**	.....
	PIPE MATERIAL (inlet / outlet)	**SA 106 Gr B | SA 106 Gr C**	.....|.....
BODY*	MODEL NO.	BIDDER TO SPECIFY	.....
	TYPE OF BODY: GUIDING : NO. OF PORTS	[■] GLOBE [] ANGLE | [] TOP [■] CAGE | ONE	.....|.....|.....|.....
	BODY SIZE: PORT SIZE: DESIGN CV	BIDDER TO SPECIFY	.....|.....|.....
	END CONNECTION & RATING (ANSI)	[■] BWE [] SWE [] FLANGED	.....
	BODY MATERIAL	[] A216 WCB [] A217 WC6 [] SS [■] A217 C5	.....
		[] A351 CF8M	.....
	PACKING: MATERIAL SINGLE / DOUBLE	[] PTFE [■] GRAFOIL [■] DOUBLE [] SINGLE	.....
	BONNET TYPE	[] STD [] EXTENDED [] FINNED	.....
	TRIM FORM	[■] LINEAR [] EQ. PERCENTAGE	.....
		[] QUICK OPEN (ON/OFF)	
	TRIM MATERIAL: SEAT | PLUG	SS 316 STELLITED | SS 316 STELLITED	.....|.....
	: CAGE | GUIDE BUSH	17-4 PH SS | SS 316 STELLITED	.....|.....
	FLOW	[] BELOW SEAT [] ABOVE SEAT	.....
	OUTLET VELOCITY	[■] < 7 M/SEC (WATER) | [] MAC NO. < 1/3	.....|.....
		(STM)	.....
	REQUIRED LEAKAGE CLASS	[] II [] III [] IV [■] V [] VI	.....
	NOISE LEVEL (dBA) (spec. 3.1.14)	LESS THAN 85 dBA	.....
	VACUUM SERVICE	[■] YES [] NO	.....
	ANTI CAVITATION TRIM	[] YES [■] NO	.....
PNEUMATIC ACTUATOR	MODEL NO. & SIZE	BIDDER TO SPECIFY	.....|.....
	CLOSE AT : OPEN AT (KG/CM2g)	1.0 | 0.2	.....|.....
	*TRAVEL TIME FOR	< 10 SEC	.....
	OPEN TO CLOSE, CLOSE TO OPEN	BIDDER TO SPECIFY |	.....
	*VALVE POSN. ON SIGNAL AIR FAILURE	[■] TO OPEN [] STAYPUT [] TO CLOSE	.....
	*VALVE POSN. ON SUPPLY AIR FAILURE	[] STAYPUT [■] TO OPEN	.....
ACCESSORIES	POSITIONER	[■] REQUIRED [] NOT REQUIRED	.....
	AIR FILTER REGULATOR	[■] REQUIRED [] NOT REQUIRED	.....
	AIR LOCK RELAY	[■] REQUIRED [] NOT REQUIRED	.....
	POSITION LIMIT SWITCH	[■] REQUIRED [] NOT REQUIRED	.....
	POSITION TRANSMITTER	PART OF POSITIONER	.....
	SOLENOID VALVE	[■] REQUIRED [] NOT REQUIRED	.....
	E/P CONVERTOR	PART OF POSITIONER	.....
	JUNCTION BOX	[■] REQUIRED [] NOT REQUIRED	.....
	HAND WHEEL (SIDE MOUNTED)	[■] REQUIRED	.....
	LOCAL POSITION INDICATOR	[■] REQUIRED	.....
	ELECTRO PNEUMATIC POSITIONER	[] REQUIRED [■] NOT REQUIRED	.....

Tag No.: **DR-16** Qty.: **ONE** Data Sheet No. PES-145-06-DS1-0

DATA SHEET – A & B

DATA SHEET – A FOR CONTROL VALVE (WITH PNEUMATIC ACTUATOR) (TO BE FILLED BY PURCHASER)			DATA SHEET – B (TO BE FILLED UP BY BIDDER)
PERFORMANCE OF VALVE	LINEARITY	± 2%	.....
	HYSTERISIS	± 1%	.....
	SENSITIVITY	± 0.5%	.....
	ACCURACY (OVERALL)	± 2%	.....

SERVICE CONDITION*

SL. No. +	LOAD	FLOW (T/HR)	INLET PR. KG/CM2(A)	OUTLET PR. KG/CM2(A)	TEMP DEG (C)	CALCU-LATED CV	% VALVE LIFT	VALVE O/L VELOCITY
1.	**VWO**	**124**	**16.72**	**0.2**	**168.3**			
2.	**100%**	**113.3**	**16.17**	**0.2**	**168.8**			
3.	**60%**	**61.2**	**10.74**	**0.2**	**148.5**			
4.	**30%**	**21.5**	**6.62**	**0.2**	**143.9**			

VALVE TYPE	[] CAVITATION [■] FLASHING [] HIGH DP
* MAX SHUT OFF PRESS (KG/CM2g) **19/VAC** * BODY DESIGN : PRESS (KG/CM2g) | TEMP (DEG C) **19/VAC | 175** * IBR FORM III-C [■] REQUIRED [] NOT REQUIRED	....|..... .....
TOTAL WEIGHT (VALVE + ACTUATOR + ACCESSORIES) Kg	.....

NOTES:

Tag No.: **DR-19** Qty.: **ONE** Data Sheet No. PES-145-06-DS1-0

DATA SHEET – A & B

DATA SHEET – A FOR CONTROL VALVE (WITH PNEUMATIC ACTUATOR) (TO BE FILLED BY PURCHASER)			DATA SHEET – B (TO BE FILLED UP BY BIDDER)
GENERAL*	PROJECT	**ROURKELA PP-II EX PROJECT (1X250 MW)**	.....
	SERVICE	**LPH-3 NORMAL DRAIN TO LPH-2**	.....
	LOCATION	[■] INDOOR [] OUTDOOR	.....
	DUTY	[] ON/OFF [■] MODULATING	.....
	PIPE SIZE (inlet / outlet)	**Ø 114.3 X 6.02 | Ø 114.3 X 6.02**	.....
	PIPE MATERIAL (inlet / outlet)	**SA 106 Gr B | SA 106 Gr B**	.....|.....
BODY*	MODEL NO.	BIDDER TO SPECIFY	.....
	TYPE OF BODY: GUIDING : NO. OF PORTS	[■] GLOBE [] ANGLE | [] TOP [■] CAGE | ONE	.....|.....|.....|.....
	BODY SIZE: PORT SIZE: DESIGN CV	BIDDER TO SPECIFY	.....|.....|.....
	END CONNECTION & RATING (ANSI)	[■] BWE [] SWE [] FLANGED	.....
	BODY MATERIAL	[] A216 WCB [■] A217 WC6 [] SS [] A217 C5	.....
		[] A351 CF8M	.....
	PACKING: MATERIAL SINGLE / DOUBLE	[] PTFE [■] GRAFOIL [■] DOUBLE [] SINGLE	.....
	BONNET TYPE	[] STD [] EXTENDED [] FINNED	.....
	TRIM FORM	[■] LINEAR [] EQ. PERCENTAGE	.....
		[] QUICK OPEN (ON/OFF)	
	TRIM MATERIAL: SEAT | PLUG	SS 316 STELLITED | SS 316 STELLITED	.....|.....
	: CAGE | GUIDE BUSH	17-4 PH SS | SS 316 STELLITED	.....|.....
	FLOW	[] BELOW SEAT [] ABOVE SEAT	.....
	OUTLET VELOCITY	[■] < 7 M/SEC (WATER) | [] MAC NO. < 1/3	.....|.....
		(STM)	.....
	REQUIRED LEAKAGE CLASS	[] II [] III [■] IV [] V [] VI	.....
	NOISE LEVEL (dBA) (spec. 3.1.14)	LESS THAN 85 dBA	.....
	VACUUM SERVICE	[■] YES [] NO	.....
	ANTI CAVITATION TRIM	[] YES [■] NO	.....
PNEUMATIC ACTUATOR	MODEL NO. & SIZE	BIDDER TO SPECIFY	.....|.....
	CLOSE AT : OPEN AT (KG/CM2g)	0.2 | 1.0	.....|.....
	*TRAVEL TIME FOR	< 10 SEC	.....
	OPEN TO CLOSE, CLOSE TO OPEN	BIDDER TO SPECIFY |	.....
	*VALVE POSN. ON SIGNAL AIR FAILURE	[] TO OPEN [] STAYPUT [■] TO CLOSE	.....
	*VALVE POSN. ON SUPPLY AIR FAILURE	[] STAYPUT [■] TO CLOSE	.....
ACCESSORIES	POSITIONER	[■] REQUIRED [] NOT REQUIRED	.....
	AIR FILTER REGULATOR	[■] REQUIRED [] NOT REQUIRED	.....
	AIR LOCK RELAY	[■] REQUIRED [] NOT REQUIRED	.....
	POSITION LIMIT SWITCH	[■] REQUIRED [] NOT REQUIRED	.....
	POSITION TRANSMITTER	PART OF POSITIONER	.....
	SOLENOID VALVE	[■] REQUIRED [] NOT REQUIRED	.....
	E/P CONVERTOR	PART OF POSITIONER	.....
	JUNCTION BOX	[■] REQUIRED [] NOT REQUIRED	.....
	HAND WHEEL (SIDE MOUNTED)	[■] REQUIRED	.....
	LOCAL POSITION INDICATOR	[■] REQUIRED	.....
	ELECTRO PNEUMATIC POSITIONER	[] REQUIRED [■] NOT REQUIRED	.....

Tag No.: **DR-19** Qty.: **ONE** Data Sheet No. PES-145-06-DS1-0

DATA SHEET – A & B

DATA SHEET – A FOR CONTROL VALVE (WITH PNEUMATIC ACTUATOR) (TO BE FILLED BY PURCHASER)			DATA SHEET – B (TO BE FILLED UP BY BIDDER)
PERFORMANCE OF VALVE	LINEARITY HYSTERISIS SENSITIVITY ACCURACY (OVERALL)	± 2% ± 1% ± 0.5% ± 2%	....

SERVICE CONDITION*

SL. No. +	LOAD	FLOW (T/HR)	INLET PR. KG/CM2(A)	OUTLET PR. KG/CM2(A)	TEMP DEG (C)	CALCU-LATED CV	% VALVE LIFT	VALVE O/L VELOCITY
1.	VWO	30.1	2.33	0.96	98.80			
2.	100%	27.7	2.27	0.93	98.00			
3.	60%	15.94	1.49	0.61	86.00			
4.	30%	8.4	0.89	0.37	71.70			
5.	MAX	35	2.33	0.96	98.80			

VALVE TYPE	[] CAVITATION [■] FLASHING [] HIGH DP
* MAX SHUT OFF PRESS (KG/CM2g) 3.5/VAC * BODY DESIGN : PRESS (KG/CM2g) | TEMP (DEG C) 3.5/VAC | 130 * IBR FORM III-C [■] REQUIRED [] NOT REQUIRED	....|..... .....
TOTAL WEIGHT (VALVE + ACTUATOR + ACCESSORIES) Kg	.....

NOTES:

1. VALVE CAPABILITY TO BE CHECKED FOR SERVICE CONDITION AT SL. NO. 5. VALVE CAN OPEN UPTO 95% AT THIS CONDITION.

Tag No.: **DR-22** Qty.: **ONE** Data Sheet No. PES-145-06-DS1-0

DATA SHEET – A & B

DATA SHEET – A FOR CONTROL VALVE (WITH PNEUMATIC ACTUATOR) (TO BE FILLED BY PURCHASER)			DATA SHEET – B (TO BE FILLED UP BY BIDDER)
GENERAL*	PROJECT	**ROURKELA PP-II EX PROJECT (1X250 MW)**	.....
	SERVICE	**LPH-3 ALT DRAIN TO LP FLASH TANK**	.....
	LOCATION	[■] INDOOR [] OUTDOOR	.....
	DUTY	[] ON/OFF [■] MODULATING	.....
	PIPE SIZE (inlet / outlet)	**Ø 114.3 X 6.02 | Ø 168.3 X 7.11**	.....
	PIPE MATERIAL (inlet / outlet)	**SA 106 Gr B | SA 106 Gr B**	.....|.....
BODY*	MODEL NO.	BIDDER TO SPECIFY	.....
	TYPE OF BODY: GUIDING : NO. OF PORTS	[■] GLOBE [] ANGLE | [] TOP [■] CAGE | ONE	.....|.....|.....|.....
	BODY SIZE: PORT SIZE: DESIGN CV	BIDDER TO SPECIFY	.....|.....|.....
	END CONNECTION & RATING (ANSI)	[■] BWE [] SWE [] FLANGED	.....
	BODY MATERIAL	[] A216 WCB [] A217 WC6 [] SS [■] A217 C5	.....
		[] A351 CF8M	.....
	PACKING: MATERIAL SINGLE / DOUBLE	[] PTFE [■] GRAFOIL [■] DOUBLE [] SINGLE	.....
	BONNET TYPE	[] STD [] EXTENDED [] FINNED	.....
	TRIM FORM	[■] LINEAR [] EQ. PERCENTAGE	.....
		[] QUICK OPEN (ON/OFF)	
	TRIM MATERIAL: SEAT | PLUG	SS 316 STELLITED | SS 316 STELLITED	.....|.....
	: CAGE | GUIDE BUSH	17-4 PH SS | SS 316 STELLITED	.....|.....
	FLOW	[] BELOW SEAT [] ABOVE SEAT	.....
	OUTLET VELOCITY	[■] < 7 M/SEC (WATER) | [] MAC NO. < 1/3	.....|.....
		(STM)	.....
	REQUIRED LEAKAGE CLASS	[] II [] III [] IV [■] V [] VI	.....
	NOISE LEVEL (dBA) (spec. 3.1.14)	LESS THAN 85 dBA	.....
	VACUUM SERVICE	[■] YES [] NO	.....
	ANTI CAVITATION TRIM	[] YES [■] NO	.....
PNEUMATIC ACTUATOR	MODEL NO. & SIZE	BIDDER TO SPECIFY	.....|.....
	CLOSE AT : OPEN AT (KG/CM2g)	1.0 | 0.2	.....|.....
	*TRAVEL TIME FOR	< 10 SEC	.....
	OPEN TO CLOSE, CLOSE TO OPEN	BIDDER TO SPECIFY |	.....
	*VALVE POSN. ON SIGNAL AIR FAILURE	[■] TO OPEN [] STAYPUT [] TO CLOSE	.....
	*VALVE POSN. ON SUPPLY AIR FAILURE	[■] STAYPUT [■] TO OPEN	.....
ACCESSORIES	POSITIONER	[■] REQUIRED [] NOT REQUIRED	.....
	AIR FILTER REGULATOR	[■] REQUIRED [] NOT REQUIRED	.....
	AIR LOCK RELAY	[■] REQUIRED [] NOT REQUIRED	.....
	POSITION LIMIT SWITCH	[■] REQUIRED [] NOT REQUIRED	.....
	POSITION TRANSMITTER	PART OF POSITIONER	.....
	SOLENOID VALVE	[■] REQUIRED [] NOT REQUIRED	.....
	E/P CONVERTOR	PART OF POSITIONER	.....
	JUNCTION BOX	[■] REQUIRED [] NOT REQUIRED	.....
	HAND WHEEL (SIDE MOUNTED)	[■] REQUIRED	.....
	LOCAL POSITION INDICATOR	[■] REQUIRED	.....
	ELECTRO PNEUMATIC POSITIONER	[] REQUIRED [■] NOT REQUIRED	.....

Tag No.: **DR-22** Qty.: **ONE** Data Sheet No. PES-145-06-DS1-0

DATA SHEET – A & B

DATA SHEET – A FOR CONTROL VALVE (WITH PNEUMATIC ACTUATOR) (TO BE FILLED BY PURCHASER)			DATA SHEET – B (TO BE FILLED UP BY BIDDER)
PERFORMANCE OF VALVE	LINEARITY HYSTERISIS SENSITIVITY ACCURACY (OVERALL)	± 2% ± 1% ± 0.5% ± 2%	....

SERVICE CONDITION*

SL. No. +	LOAD	FLOW (T/HR)	INLET PR. KG/CM2(A)	OUTLET PR. KG/CM2(A)	TEMP DEG (C)	CALCU-LATED CV	% VALVE LIFT	VALVE O/L VELOCITY
1.	VWO	30.1	2.78	0.2	98.80			
2.	100%	27.7	2.72	0.2	98.00			
3.	60%	15.94	1.94	0.2	86.00			
4.	30%	8.4	1.35	0.2	71.70			
5.	MAX	40	2.78	0.2	98.80			

VALVE TYPE	[] CAVITATION [■] FLASHING [] HIGH DP
* MAX SHUT OFF PRESS (KG/CM2g) 3.5/VAC * BODY DESIGN : PRESS (KG/CM2g) | TEMP (DEG C) 3.5/VAC | 130 * IBR FORM III-C [■] REQUIRED [] NOT REQUIRED	....|..... .....
TOTAL WEIGHT (VALVE + ACTUATOR + ACCESSORIES) Kg	.....

NOTES:

1. VALVE CAPABILITY TO BE CHECKED FOR SERVICE CONDITION AT SL. NO. 5. VALVE CAN OPEN UPTO 95% AT THIS CONDITION.

Tag No.: **DR-25** Qty.: **ONE** Data Sheet No. PES-145-06-DS1-0

DATA SHEET – A & B

DATA SHEET – A FOR CONTROL VALVE (WITH PNEUMATIC ACTUATOR) (TO BE FILLED BY PURCHASER)			DATA SHEET – B (TO BE FILLED UP BY BIDDER)
GENERAL*	PROJECT	**ROURKELA PP-II EX PROJECT (1X250 MW)**	.....
	SERVICE	**LPH-2 NORMAL DRAIN TO LPH-1**	.....
	LOCATION	[■] INDOOR [] OUTDOOR	.....
	DUTY	[] ON/OFF [■] MODULATING	.....
	PIPE SIZE (inlet / outlet)	**Ø 168.3 X 7.11 | Ø 219.1 X 6.35**	.....
	PIPE MATERIAL (inlet / outlet)	**SA 106 Gr B | SA 106 Gr B**	.....|.....
BODY*	MODEL NO.	BIDDER TO SPECIFY	.....
	TYPE OF BODY: GUIDING : NO. OF PORTS	[■] GLOBE [] ANGLE | [] TOP [■] CAGE | ONE	.....|.....|.....|.....
	BODY SIZE: PORT SIZE: DESIGN CV	BIDDER TO SPECIFY	.....|.....|.....
	END CONNECTION & RATING (ANSI)	[■] BWE [] SWE [] FLANGED	.....
	BODY MATERIAL	[] A216 WCB [■] A217 WC6 [] SS [] A217 C5	.....
		[] A351 CF8M	.....
	PACKING: MATERIAL SINGLE / DOUBLE	[] PTFE [■] GRAFOIL [■] DOUBLE [] SINGLE	.....
	BONNET TYPE	[] STD [] EXTENDED [] FINNED	.....
	TRIM FORM	[■] LINEAR [] EQ. PERCENTAGE	.....
		[] QUICK OPEN (ON/OFF)	
	TRIM MATERIAL: SEAT | PLUG	SS 316 STELLITED | SS 316 STELLITED	.....|.....
	: CAGE | GUIDE BUSH	17-4 PH SS | SS 316 STELLITED	.....|.....
	FLOW	[] BELOW SEAT [] ABOVE SEAT	.....
	OUTLET VELOCITY	[■] < 7 M/SEC (WATER) | [] MAC NO. < 1/3	.....|.....
		(STM)	.....
	REQUIRED LEAKAGE CLASS	[] II [] III [■] IV [] V [] VI	.....
	NOISE LEVEL (dBA) (spec. 3.1.14)	LESS THAN 85 dBA	.....
	VACUUM SERVICE	[■] YES [] NO	.....
	ANTI CAVITATION TRIM	[] YES [■] NO	.....
PNEUMATIC ACTUATOR	MODEL NO. & SIZE	BIDDER TO SPECIFY	.....|.....
	CLOSE AT : OPEN AT (KG/CM2g)	0.2 | 1.0	.....|.....
	*TRAVEL TIME FOR	< 10 SEC	.....
	OPEN TO CLOSE, CLOSE TO OPEN	BIDDER TO SPECIFY |	.....
	*VALVE POSN. ON SIGNAL AIR FAILURE	[] TO OPEN [] STAYPUT [■] TO CLOSE	.....
	*VALVE POSN. ON SUPPLY AIR FAILURE	[] STAYPUT [■] TO CLOSE	.....
ACCESSORIES	POSITIONER	[■] REQUIRED [] NOT REQUIRED	.....
	AIR FILTER REGULATOR	[■] REQUIRED [] NOT REQUIRED	.....
	AIR LOCK RELAY	[■] REQUIRED [] NOT REQUIRED	.....
	POSITION LIMIT SWITCH	[■] REQUIRED [] NOT REQUIRED	.....
	POSITION TRANSMITTER	PART OF POSITIONER	.....
	SOLENOID VALVE	[■] REQUIRED [] NOT REQUIRED	.....
	E/P CONVERTOR	PART OF POSITIONER	.....
	JUNCTION BOX	[■] REQUIRED [] NOT REQUIRED	.....
	HAND WHEEL (SIDE MOUNTED)	[■] REQUIRED	.....
	LOCAL POSITION INDICATOR	[■] REQUIRED	.....
	ELECTRO PNEUMATIC POSITIONER	[] REQUIRED [■] NOT REQUIRED	.....

Tag No.: **DR-25** Qty.: **ONE** Data Sheet No. PES-145-06-DS1-0

DATA SHEET – A & B

DATA SHEET – A FOR CONTROL VALVE (WITH PNEUMATIC ACTUATOR) (TO BE FILLED BY PURCHASER)			DATA SHEET – B (TO BE FILLED UP BY BIDDER)
PERFORMANCE OF VALVE	LINEARITY	± 2%	.....
	HYSTERISIS	± 1%	.....
	SENSITIVITY	± 0.5%	.....
	ACCURACY (OVERALL)	± 2%	.....

SERVICE CONDITION*

SL. No. +	LOAD	FLOW (T/HR)	INLET PR. KG/CM2(A)	OUTLET PR. KG/CM2(A)	TEMP DEG (C)	CALCU-LATED CV	% VALVE LIFT	VALVE O/L VELOCITY
1.	VWO	50.9	0.94	0.48	79.4			
2.	100%	46.7	0.91	0.47	78.8			
3.	60%	26.5	0.6	0.33	68.9			
4.	30%	13.66	0.35	0.21	56.3			
5.	MAX	54.16	1.00	0.52	81.3			

VALVE TYPE	[] CAVITATION [■] FLASHING [] HIGH DP
* MAX SHUT OFF PRESS (KG/CM2g) 3.5/VAC * BODY DESIGN : PRESS (KG/CM2g) | TEMP (DEG C) 3.5/VAC | 105 * IBR FORM III-C [] REQUIRED [■] NOT REQUIRED	....|..... .....
TOTAL WEIGHT (VALVE + ACTUATOR + ACCESSORIES) Kg	.....

NOTES:

1. VALVE CAPABILITY TO BE CHECKED FOR SERVICE CONDITION AT SL. NO. 5. VALVE CAN OPEN UPTO 95% AT THIS CONDITION.

Tag No.: **DR-28** Qty.: **ONE** Data Sheet No. PES-145-06-DS1-0

DATA SHEET – A & B

DATA SHEET – A FOR CONTROL VALVE (WITH PNEUMATIC ACTUATOR) (TO BE FILLED BY PURCHASER)			DATA SHEET – B (TO BE FILLED UP BY BIDDER)
GENERAL*	PROJECT	**ROURKELA PP-II EX PROJECT (1X250 MW)**	.....
	SERVICE	**LPH-2 ALT DRAIN TO LP FLASH TANK**	.....
	LOCATION	[■] INDOOR [] OUTDOOR	.....
	DUTY	[] ON/OFF [■] MODULATING	.....
	PIPE SIZE (inlet / outlet)	**∅ 168.3 X 7.11 | ∅ 219.1 X 8.18**	.....
	PIPE MATERIAL (inlet / outlet)	**SA 106 Gr B | SA 106 Gr C**	.....|.....
BODY*	MODEL NO.	BIDDER TO SPECIFY	.....
	TYPE OF BODY: GUIDING : NO. OF PORTS	[■] GLOBE [] ANGLE | [] TOP [■] CAGE | ONE	.....|.....|.....|.....
	BODY SIZE: PORT SIZE: DESIGN CV	BIDDER TO SPECIFY	.....|.....|.....
	END CONNECTION & RATING (ANSI)	[■] BWE [] SWE [] FLANGED	.....
	BODY MATERIAL	[] A216 WCB [] A217 WC6 [] SS [■] A217 C5	.....
		[] A351 CF8M	.....
	PACKING: MATERIAL SINGLE / DOUBLE	[] PTFE [■] GRAFOIL [■] DOUBLE [] SINGLE	.....
	BONNET TYPE	[] STD [] EXTENDED [] FINNED	.....
	TRIM FORM	[■] LINEAR [] EQ. PERCENTAGE	.....
		[] QUICK OPEN (ON/OFF)	
	TRIM MATERIAL: SEAT | PLUG	SS 316 STELLITED | SS 316 STELLITED	.....|.....
	: CAGE | GUIDE BUSH	17-4 PH SS | SS 316 STELLITED	.....|.....
	FLOW	[] BELOW SEAT [] ABOVE SEAT	.....
	OUTLET VELOCITY	[■] < 7 M/SEC (WATER) | [] MAC NO. < 1/3	.....|.....
		(STM)	.....
	REQUIRED LEAKAGE CLASS	[] II [] III [] IV [■] V [] VI	.....
	NOISE LEVEL (dBA) (spec. 3.1.14)	LESS THAN 85 dBA	.....
	VACUUM SERVICE	[■] YES [] NO	.....
	ANTI CAVITATION TRIM	[] YES [■] NO	.....
PNEUMATIC ACTUATOR	MODEL NO. & SIZE	BIDDER TO SPECIFY	.....|.....
	CLOSE AT : OPEN AT (KG/CM2g)	1.0 | 0.2	.....|.....
	*TRAVEL TIME FOR	< 10 SEC	.....
	OPEN TO CLOSE, CLOSE TO OPEN	BIDDER TO SPECIFY |	.....
	*VALVE POSN. ON SIGNAL AIR FAILURE	[■] TO OPEN [] STAYPUT [] TO CLOSE	.....
	*VALVE POSN. ON SUPPLY AIR FAILURE	[] STAYPUT [■] TO OPEN	.....
ACCESSORIES	POSITIONER	[■] REQUIRED [] NOT REQUIRED	.....
	AIR FILTER REGULATOR	[■] REQUIRED [] NOT REQUIRED	.....
	AIR LOCK RELAY	[■] REQUIRED [] NOT REQUIRED	.....
	POSITION LIMIT SWITCH	[■] REQUIRED [] NOT REQUIRED	.....
	POSITION TRANSMITTER	PART OF POSITIONER	.....
	SOLENOID VALVE	[■] REQUIRED [] NOT REQUIRED	.....
	E/P CONVERTOR	PART OF POSITIONER	.....
	JUNCTION BOX	[■] REQUIRED [] NOT REQUIRED	.....
	HAND WHEEL (SIDE MOUNTED)	[■] REQUIRED	.....
	LOCAL POSITION INDICATOR	[■] REQUIRED	.....
	ELECTRO PNEUMATIC POSITIONER	[] REQUIRED [■] NOT REQUIRED	.....

Tag No.: **DR-28** Qty.: **ONE** Data Sheet No. PES-145-06-DS1-0

DATA SHEET – A & B

DATA SHEET – A FOR CONTROL VALVE (WITH PNEUMATIC ACTUATOR) (TO BE FILLED BY PURCHASER)			DATA SHEET – B (TO BE FILLED UP BY BIDDER)
PERFORMANCE OF VALVE	LINEARITY	± 2%	.....
	HYSTERISIS	± 1%	.....
	SENSITIVITY	± 0.5%	.....
	ACCURACY (OVERALL)	± 2%	.....

SERVICE CONDITION*

SL. No. +	LOAD	FLOW (T/HR)	INLET PR. KG/CM2(A)	OUTLET PR. KG/CM2(A)	TEMP DEG (C)	CALCU-LATED CV	% VALVE LIFT	VALVE O/L VELOCITY
1.	VWO	50.9	1.38	0.2	79.4			
2.	100%	46.7	1.36	0.2	78.8			
3.	60%	26.5	1.04	0.2	68.9			
4.	30%	13.66	0.8	0.2	56.3			
5.	MAX	70	1.38	0.2	79.4			

VALVE TYPE	[] CAVITATION [■] FLASHING [] HIGH DP
* MAX SHUT OFF PRESS (KG/CM2g) 3.5/VAC * BODY DESIGN : PRESS (KG/CM2g) | TEMP (DEG C) 3.5/VAC | 105 * IBR FORM III-C [■] REQUIRED [] NOT REQUIRED	....|..... .....
TOTAL WEIGHT (VALVE + ACTUATOR + ACCESSORIES) Kg	.....

NOTES:

1. VALVE CAPABILITY TO BE CHECKED FOR SERVICE CONDITION AT SL. NO. 5. VALVE CAN OPEN UPTO 95% AT THIS CONDITION.

Tag No.: **DR-38** Qty.: **ONE** Data Sheet No. PES-145-06-DS1-0

DATA SHEET – A & B

DATA SHEET – A FOR CONTROL VALVE (WITH PNEUMATIC ACTUATOR) (TO BE FILLED BY PURCHASER)			DATA SHEET – B (TO BE FILLED UP BY BIDDER)
GENERAL*	PROJECT	**ROURKELA PP-II EX PROJECT (1X250 MW)**	.....
	SERVICE	**DEAERATOR OVERFLOW TO LP F/TANK**	.....
	LOCATION	[■] INDOOR [] OUTDOOR	.....
	DUTY	[■] ON/OFF [] MODULATING	.....
	PIPE SIZE (inlet / outlet)	**Ø 114.3 X6.02 | Ø 219.1 X 8.18**	.....
	PIPE MATERIAL (inlet / outlet)	**SA 106 Gr B | SA 106 Gr C**	.....|.....
BODY*	MODEL NO.	BIDDER TO SPECIFY	.....
	TYPE OF BODY: GUIDING : NO. OF PORTS	[■] GLOBE [] ANGLE | [] TOP [■] CAGE | ONE	.....|.....|.....|.....
	BODY SIZE: PORT SIZE: DESIGN CV	BIDDER TO SPECIFY	.....|.....|.....
	END CONNECTION & RATING (ANSI)	[■] BWE [] SWE [] FLANGED	.....
	BODY MATERIAL	[] A216 WCB [■] A217 WC6 [] SS [] A217 C5	.....
		[] A351 CF8M	.....
	PACKING: MATERIAL SINGLE / DOUBLE	[] PTFE [■] GRAFOIL [■] DOUBLE [] SINGLE	.....
	BONNET TYPE	[] STD [] EXTENDED [] FINNED	.....
	TRIM FORM	[] LINEAR [] EQ. PERCENTAGE	.....
		[■] QUICK OPEN (ON/OFF)	
	TRIM MATERIAL: SEAT | PLUG	SS 316 STELLITED | SS 316 STELLITED	.....|.....
	: CAGE | GUIDE BUSH	17-4 PH SS | SS 316 STELLITED	.....|.....
	FLOW	[] BELOW SEAT [] ABOVE SEAT	.....
	OUTLET VELOCITY	[■] < 7 M/SEC (WATER) | [] MAC NO. < 1/3	.....|.....
		(STM)	.....
	REQUIRED LEAKAGE CLASS	[] II [] III [] IV [■] V [] VI	.....
	NOISE LEVEL (dBA) (spec. 3.1.14)	LESS THAN 85 dBA	.....
	VACUUM SERVICE	[■] YES [] NO	.....
	ANTI CAVITATION TRIM	[] YES [■] NO	.....
PNEUMATIC ACTUATOR	MODEL NO. & SIZE	BIDDER TO SPECIFY	.....|.....
	CLOSE AT : OPEN AT (KG/CM2g)	1.0 | 0.2	.....|.....
	*TRAVEL TIME FOR	< 10 SEC	.....
	OPEN TO CLOSE, CLOSE TO OPEN	BIDDER TO SPECIFY |	.....
	*VALVE POSN. ON SIGNAL AIR FAILURE	[■] TO OPEN [] STAYPUT [] TO CLOSE	.....
	*VALVE POSN. ON SUPPLY AIR FAILURE	[■] STAYPUT	.....
ACCESSORIES	POSITIONER (SMART)	[] REQUIRED [■] NOT REQUIRED	.....
	AIR FILTER REGULATOR	[■] REQUIRED [] NOT REQUIRED	.....
	AIR LOCK RELAY	[■] REQUIRED [] NOT REQUIRED	.....
	POSITION LIMIT SWITCH	[■] REQUIRED [] NOT REQUIRED	.....
	POSITION TRANSMITTER	[] REQUIRED [■] NOT REQUIRED	.....
	SOLENOID VALVE	[■] REQUIRED [] NOT REQUIRED	.....
	E/P CONVERTOR	[] REQUIRED [■] NOT REQUIRED	.....
	JUNCTION BOX	[■] REQUIRED [] NOT REQUIRED	.....
	HAND WHEEL (SIDE MOUNTED)	[■] REQUIRED	.....
	LOCAL POSITION INDICATOR	[■] REQUIRED	.....
	ELECTRO PNEUMATIC POSITIONER	[] REQUIRED [■] NOT REQUIRED	.....

Tag No.: **DR-38** Qty.: **ONE** Data Sheet No. PES-145-06-DS1-0

DATA SHEET – A & B

DATA SHEET – A FOR CONTROL VALVE (WITH PNEUMATIC ACTUATOR) (TO BE FILLED BY PURCHASER)			DATA SHEET – B (TO BE FILLED UP BY BIDDER)
PERFORMANCE OF VALVE	LINEARITY	± 2%	.....
	HYSTERISIS	± 1%	.....
	SENSITIVITY	± 0.5%	.....
	ACCURACY (OVERALL)	± 2%	.....

SERVICE CONDITION*

SL. No. +	LOAD	FLOW (T/HR)	INLET PR. KG/CM2(A)	OUTLET PR. KG/CM2(A)	TEMP DEG (C)	CALCU-LATED CV	% VALVE LIFT	VALVE O/L VELOCITY
1.	**MAXIMUM**	**81**	**8.04**	**0.2**	**160.6**			

VALVE TYPE	[] CAVITATION [■] FLASHING [] HIGH DP
* MAX SHUT OFF PRESS (KG/CM2g) **10/VAC** * BODY DESIGN : PRESS (KG/CM2g) | TEMP (DEG C) **10/VAC | 170** * IBR FORM III-C [■] REQUIRED [] NOT REQUIRED	....|..... .....
TOTAL WEIGHT (VALVE + ACTUATOR + ACCESSORIES) Kg	.....

NOTES:

Tag No.: **FD-17** Qty.: **ONE** Data Sheet No. PES-145-06-DS1-0

DATA SHEET – A & B

DATA SHEET – A FOR CONTROL VALVE (WITH PNEUMATIC ACTUATOR) (TO BE FILLED BY PURCHASER)			DATA SHEET – B (TO BE FILLED UP BY BIDDER)
GENERAL*	PROJECT	**ROURKELA PP-II EX PROJECT (1X250 MW)**	.....
	SERVICE	**FEED CONTROL (100% CAPACITY)**	.....
	LOCATION	[■] INDOOR [] OUTDOOR	.....
	DUTY	[] ON/OFF [■] MODULATING	.....
	PIPE SIZE (inlet / outlet)	**∅ 368 X 48 | ∅ 368 X 48**	.....
	PIPE MATERIAL (inlet / outlet)	**SA 106 Gr C | SA 106 Gr C**	.....|.....
BODY*	MODEL NO.	BIDDER TO SPECIFY	.....
	TYPE OF BODY: GUIDING : NO. OF PORTS	[■] GLOBE [] ANGLE | [] TOP [■] CAGE | ONE	.....|.....|.....|.....
	BODY SIZE: PORT SIZE: DESIGN CV	BIDDER TO SPECIFY	.....|.....|.....
	END CONNECTION & RATING (ANSI)	[■] BWE [] SWE [] FLANGED	.....
	BODY MATERIAL	[] A216 WCB [■] A217 WC6 [] SS [] A217 C5	.....
		[] A351 CF8M	.....
	PACKING: MATERIAL SINGLE / DOUBLE	[] PTFE [■] GRAFOIL [] DOUBLE [■] SINGLE	.....
	BONNET TYPE	[] STD [] EXTENDED [] FINNED	.....
	TRIM FORM	[■] LINEAR [] EQ. PERCENTAGE	.....
		[] QUICK OPEN (ON/OFF)	
	TRIM MATERIAL: SEAT | PLUG	SS 316 STELLITED | SS 316 STELLITED	.....|.....
	: CAGE | GUIDE BUSH	17-4 PH SS | SS 316 STELLITED	.....|.....
	FLOW	[] BELOW SEAT [] ABOVE SEAT	.....
	OUTLET VELOCITY	[■] < 7 M/SEC (WATER) | [] MAC NO. < 1/3 (STM)	.....|.....
	REQUIRED LEAKAGE CLASS	[] II [] III [■] IV [] V [] VI	.....
	NOISE LEVEL (dBA) (spec. 3.1.14)	LESS THAN 85 dBA	.....
	VACUUM SERVICE	[] YES [■] NO	.....
	ANTI CAVITATION TRIM	[] YES [■] NO	.....
PNEUMATIC ACTUATOR	MODEL NO. & SIZE	BIDDER TO SPECIFY	.....|.....
	CLOSE AT : OPEN AT (KG/CM2g)	1.0 | 0.2	.....|.....
	*TRAVEL TIME FOR	< 10 SEC	.....
	OPEN TO CLOSE, CLOSE TO OPEN	BIDDER TO SPECIFY |	.....
	*VALVE POSN. ON SIGNAL AIR FAILURE	[] TO OPEN [■] STAYPUT [] TO CLOSE	.....
	*VALVE POSN. ON SUPPLY AIR FAILURE	[■] STAYPUT	.....
ACCESSORIES	POSITIONER	[■] REQUIRED [] NOT REQUIRED	.....
	AIR FILTER REGULATOR	[■] REQUIRED [] NOT REQUIRED	.....
	AIR LOCK RELAY	[■] REQUIRED [] NOT REQUIRED	.....
	POSITION LIMIT SWITCH	[■] REQUIRED [] NOT REQUIRED	.....
	POSITION TRANSMITTER	PART OF POSITIONER	.....
	SOLENOID VALVE	[■] REQUIRED [] NOT REQUIRED	.....
	E/P CONVERTOR	PART OF POSITIONER	.....
	JUNCTION BOX	[■] REQUIRED [] NOT REQUIRED	.....
	HAND WHEEL (SIDE MOUNTED)	[■] REQUIRED	.....
	LOCAL POSITION INDICATOR	[■] REQUIRED	.....
	ELECTRO PNEUMATIC POSITIONER	[] REQUIRED [■] NOT REQUIRED	.....

Tag No.: **FD-17** Qty.: **ONE** Data Sheet No. PES-145-06-DS1-0

DATA SHEET – A & B

DATA SHEET – A FOR CONTROL VALVE (WITH PNEUMATIC ACTUATOR) (TO BE FILLED BY PURCHASER)			DATA SHEET – B (TO BE FILLED UP BY BIDDER)
PERFORMANCE OF VALVE	LINEARITY	± 2%	.....
	HYSTERISIS	± 1%	.....
	SENSITIVITY	± 0.5%	.....
	ACCURACY (OVERALL)	± 2%	.....

SERVICE CONDITION*

SL. No. +	LOAD	FLOW (T/HR)	INLET PR. KG/CM2(A)	OUTLET PR. KG/CM2(A)	TEMP DEG (C)	CALCU-LATED CV	% VALVE LIFT	VALVE O/L VELOCITY
1.	MIN.	210	160	155	165			
2.	60%	475	167	162	223.6			
3.	100%	741	180	175	246.3			
4.	VWO	802	183	178	246.3			
5.	MAX.	828	185	180	246.6			

VALVE TYPE	[] CAVITATION [] FLASHING [] HIGH DP
* MAX SHUT OFF PRESS (KG/CM2g) 283 * BODY DESIGN : PRESS (KG/CM2g) | TEMP (DEG C) 283 | 260 * IBR FORM III-C [■] REQUIRED [] NOT REQUIRED	....|..... .....
TOTAL WEIGHT (VALVE + ACTUATOR + ACCESSORIES) Kg	.....

NOTE:

1. VALVE CAPABILITY TO BE CHECKED FOR SERVICE CONDITION AT SL. NO. 5. VALVE CAN OPEN UPTO 95% AT THIS CONDITION.

Tag No.: **FD-20** Qty.: **ONE** Data Sheet No. PES-145-06-DS1-0

DATA SHEET – A & B

DATA SHEET – A FOR CONTROL VALVE (WITH PNEUMATIC ACTUATOR) (TO BE FILLED BY PURCHASER)			DATA SHEET – B (TO BE FILLED UP BY BIDDER)
GENERAL*	PROJECT	**ROURKELA PP-II EX PROJECT (1X250 MW)**	.....
	SERVICE	**FEED CONTROL (30% CAPACITY)**	.....
	LOCATION	[■] INDOOR [] OUTDOOR	.....
	DUTY	[] ON/OFF [■] MODULATING	.....
	PIPE SIZE (inlet / outlet)	**Ø 219.1 X 25 | Ø 219.1 X 25**	.....
	PIPE MATERIAL (inlet / outlet)	**SA 106 Gr C | SA 106 Gr C**	.....|.....
BODY*	MODEL NO.	BIDDER TO SPECIFY	.....
	TYPE OF BODY: GUIDING : NO. OF PORTS	[■] GLOBE [] ANGLE | [] TOP [■] CAGE | ONE	.....|.....|.....|.....
	BODY SIZE: PORT SIZE: DESIGN CV	BIDDER TO SPECIFY	.....|.....|.....
	END CONNECTION & RATING (ANSI)	[■] BWE [] SWE [] FLANGED	.....
	BODY MATERIAL	[] A216 WCB [■] A217 WC6 [] SS [] A217 C5	.....
		[] A351 CF8M	.....
	PACKING: MATERIAL SINGLE / DOUBLE	[] PTFE [■] GRAFOIL [] DOUBLE [■] SINGLE	.....
	BONNET TYPE	[] STD [] EXTENDED [] FINNED	.....
	TRIM FORM	[] LINEAR [■] EQ. PERCENTAGE	.....
		[] QUICK OPEN (ON/OFF)	
	TRIM MATERIAL: SEAT | PLUG	SS 316 STELLITED | SS 316 STELLITED	.....|.....
	: CAGE | GUIDE BUSH	17-4 PH SS | SS 316 STELLITED	.....|.....
	FLOW	[] BELOW SEAT [] ABOVE SEAT	.....
	OUTLET VELOCITY	[■] < 7 M/SEC (WATER) | [] MAC NO. < 1/3	.....|.....
		(STM)	.....
	REQUIRED LEAKAGE CLASS	[] II [] III [■] IV [] V [] VI	.....
	NOISE LEVEL (dBA) (spec. 3.1.14)	LESS THAN 85 dBA	.....
	VACUUM SERVICE	[] YES [■] NO	.....
	ANTI CAVITATION TRIM	[] YES [■] NO	.....
PNEUMATIC ACTUATOR	MODEL NO. & SIZE	BIDDER TO SPECIFY	.....|.....
	CLOSE AT : OPEN AT (KG/CM2g)	1.0 | 0.2	.....|.....
	*TRAVEL TIME FOR	< 10 SEC	.....
	OPEN TO CLOSE, CLOSE TO OPEN	BIDDER TO SPECIFY |	.....
	*VALVE POSN. ON SIGNAL AIR FAILURE	[■] TO OPEN [] STAYPUT [] TO CLOSE	.....
	*VALVE POSN. ON SUPPLY AIR FAILURE	[■] STAYPUT	.....
ACCESSORIES	POSITIONER	[■] REQUIRED [] NOT REQUIRED	.....
	AIR FILTER REGULATOR	[■] REQUIRED [] NOT REQUIRED	.....
	AIR LOCK RELAY	[■] REQUIRED [] NOT REQUIRED	.....
	POSITION LIMIT SWITCH	[■] REQUIRED [] NOT REQUIRED	.....
	POSITION TRANSMITTER	PART OF POSITIONER	.....
	SOLENOID VALVE	[■] REQUIRED [] NOT REQUIRED	.....
	E/P CONVERTOR	PART OF POSITIONER	.....
	JUNCTION BOX	[■] REQUIRED [] NOT REQUIRED	.....
	HAND WHEEL (SIDE MOUNTED)	[■] REQUIRED	.....
	LOCAL POSITION INDICATOR	[■] REQUIRED	.....
	ELECTRO PNEUMATIC POSITIONER	[] REQUIRED [■] NOT REQUIRED	.....

Tag No.: **FD-20** Qty.: **ONE** Data Sheet No. PES-145-06-DS1-0

DATA SHEET – A & B

DATA SHEET – A FOR CONTROL VALVE (WITH PNEUMATIC ACTUATOR) (TO BE FILLED BY PURCHASER)			DATA SHEET – B (TO BE FILLED UP BY BIDDER)
PERFORMANCE OF VALVE	LINEARITY	± 2%	.....
	HYSTERISIS	± 1%	.....
	SENSITIVITY	± 0.5%	.....
	ACCURACY (OVERALL)	± 2%	.....

SERVICE CONDITION*

SL. No. +	LOAD	FLOW (T/HR)	INLET PR. KG/CM2(A)	OUTLET PR. KG/CM2(A)	TEMP DEG (C)	CALCU-LATED CV	% VALVE LIFT	VALVE O/L VELOCITY
1.	MIN.	40	60	8	111			
2.	MAX.	260	160	155	138 TO 201			

VALVE TYPE	[] CAVITATION [] FLASHING [■] HIGH DP
* MAX SHUT OFF PRESS (KG/CM2g) 283 * BODY DESIGN : PRESS (KG/CM2g) | TEMP (DEG C) 283 | 260 * IBR FORM III-C [■] REQUIRED [] NOT REQUIRED	....|..... .....
TOTAL WEIGHT (VALVE + ACTUATOR + ACCESSORIES) Kg	.....

Tag No.: **DM-2** Qty.: **ONE** Date Sheet No. PES-145-06-DS1-0

DATA SHEET – A & B

DATA SHEET – A FOR CONTROL VALVE (WITH PNEUMATIC ACTUATOR) (TO BE FILLED BY PURCHASER)			DATA SHEET – B (TO BE FILLED UP BY BIDDER)
GENERAL	PROJECT	**ROURKELA PP-II EX PROJECT (1X250 MW)**	.....
	SERVICE	**DM EMERGENCY MAKE-UP TO HOTWELL**	.....
	LOCATION	[■] INDOOR [] OUTDOOR	.....
	DUTY	[] ON/OFF [■] MODULATING	.....
	PIPE SIZE (inlet / outlet)	**∅ 114.3 X 3.05 | ∅ 114.3 X 3.05**	.....
	PIPE MATERIAL (inlet / outlet)	**SA312TP304H | SA312TP304H**	.....|.....
BODY	MODEL NO.	BIDDER TO SPECIFY	.....
	TYPE OF BODY: GUIDING : NO. OF PORTS	[■] GLOBE [] ANGLE | [] TOP [■] CAGE | ONE	.....|.....|.....|.....
	BODY SIZE: PORT SIZE: DESIGN CV	BIDDER TO SPECIFY	.....|.....|.....
	END CONNECTION & RATING (ANSI)	[■] BWE [] SWE [] FLANGED	.....
	BODY MATERIAL	[] A216 WCB [] A217 WC6 [] A217 WC9	.....
		[■] A351 CF8M	.....
	PACKING: MATERIAL SINGLE / DOUBLE	[] PTFE [■] GRAFOIL [■] DOUBLE [] SINGLE	.....
	BONNET TYPE	[] STD [] EXTENDED [] FINNED	.....
	TRIM FORM	[] LINEAR [■] EQ. PERCENTAGE	.....
		[] QUICK OPEN (ON/OFF)	
	TRIM MATERIAL: SEAT | PLUG	SS 316 STELLITED	.....|.....
	: CAGE | GUIDE BUSH		.....|.....
	FLOW	[] BELOW SEAT [] ABOVE SEAT	.....
	OUTLET VELOCITY	[■] < 7 M/SEC (WATER) | [] MAC NO. < 1/3	.....|.....
		(STM)	.....
	REQUIRED LEAKAGE CLASS	[] II [] III [] IV [■] V [] VI	.....
	NOISE LEVEL (dBA) (spec. 3.1.14)	LESS THAN 85 dBA	.....
	VACUUM SERVICE	[■] YES [] NO	.....
	ANTI CAVITATION TRIM	[■] YES [] NO	.....
PNEUMATIC ACTUATOR	MODEL NO. & SIZE	BIDDER TO SPECIFY	.....|.....
	CLOSE AT : OPEN AT (KG/CM2g)	1.0 | 0.2	.....|.....
	TRAVEL TIME FOR	< 10 SEC	.....
	OPEN TO CLOSE, CLOSE TO OPEN	BIDDER TO SPECIFY |	.....
	VALVE POSN. ON SIGNAL AIR FAILURE	[] TO OPEN [■] STAYPUT [] TO CLOSE	.....
	VALVE POSN. ON SUPPLY AIR FAILURE	[■] STAYPUT	.....
ACCESSORIES	POSITIONER	[■] REQUIRED [] NOT REQUIRED	.....
	AIR FILTER REGULATOR	[■] REQUIRED [] NOT REQUIRED	.....
	AIR LOCK RELAY	[■] REQUIRED [] NOT REQUIRED	.....
	POSITION LIMIT SWITCH	[■] REQUIRED [] NOT REQUIRED	.....
	POSITION TRANSMITTER	PART OF POSITIONER	.....
	SOLENOID VALVE	[■] REQUIRED [] NOT REQUIRED	.....
	E/P CONVERTOR	PART OF POSITIONER	.....
	JUNCTION BOX	[■] REQUIRED [] NOT REQUIRED	.....
	HAND WHEEL (SIDE MOUNTED)	[■] REQUIRED	.....
	LOCAL POSITION INDICATOR	[■] REQUIRED	.....
	ELECTRO PNEUMATIC POSITIONER	[] REQUIRED [■] NOT REQUIRED	.....

Tag No.: **DM-2** Qty.: **ONE** Date Sheet No. PES-145-06-DS1-0

DATA SHEET – A & B

DATA SHEET – A FOR CONTROL VALVE (WITH PNEUMATIC ACTUATOR) (TO BE FILLED BY PURCHASER)			DATA SHEET – B (TO BE FILLED UP BY BIDDER)
PERFORMANCE OF VALVE	LINEARITY	± 2%	.....
	HYSTERISIS	± 1%	.....
	SENSITIVITY	± 0.5%	.....
	ACCURACY (OVERALL)	± 2%	.....

SERVICE CONDITION*

SL. No. +	LOAD	FLOW (T/HR)	INLET PR. KG/CM2(A)	OUTLET PR. KG/CM2(A)	TEMP DEG (C)	CALCU-LATED CV	% VALVE LIFT	VALVE O/L VELOCITY
1.	MINIMUM	15	4.5	0.2	45			
2.	MAXIMUM	55	3.5	0.2	45			

VALVE TYPE	[■] CAVITATION [] FLASHING [] HIGH DP
MAX SHUT OFF PRESS (KG/CM2g) 7 BODY DESIGN : PRESS (KG/CM2g) | TEMP (DEG C) 7/VACUUM | 55 IBR FORM III-C [] REQUIRED [■] NOT REQUIRED	....|..... .....
TOTAL WEIGHT (VALVE + ACTUATOR + ACCESSORIES) Kg	.....

Tag No.: **DM-6** Qty.: **ONE** Date Sheet No. PES-145-06-DS1-0

DATA SHEET – A & B

DATA SHEET – A FOR CONTROL VALVE (WITH PNEUMATIC ACTUATOR) (TO BE FILLED BY PURCHASER)			DATA SHEET – B (TO BE FILLED UP BY BIDDER)
GENERAL	PROJECT	**ROURKELA PP-II EX PROJECT (1X250 MW)**	.....
	SERVICE	**DM NORMAL MAKE-UP TO HOTWELL**	.....
	LOCATION	[■] INDOOR [] OUTDOOR	.....
	DUTY	[] ON/OFF [■] MODULATING	.....
	PIPE SIZE (inlet / outlet)	**∅ 88.9 X 3.05 | ∅ 88.9 X 3.05**	.....
	PIPE MATERIAL (inlet / outlet)	**SA312TP304H | SA312TP304H**	.....|.....
BODY	MODEL NO.	BIDDER TO SPECIFY	.....
	TYPE OF BODY: GUIDING : NO. OF PORTS	[■] GLOBE [] ANGLE | [] TOP [■] CAGE | ONE	.....|.....|.....|.....
	BODY SIZE: PORT SIZE: DESIGN CV	BIDDER TO SPECIFY	.....|.....|.....
	END CONNECTION & RATING (ANSI)	[■] BWE [] SWE [] FLANGED	.....
	BODY MATERIAL	[] A216 WCB [] A217 WC6 [] A217 WC9	.....
		[■] A351 CF8M	.....
	PACKING: MATERIAL SINGLE / DOUBLE	[] PTFE [■] GRAFOIL [■] DOUBLE [] SINGLE	.....
	BONNET TYPE	[] STD [] EXTENDED [] FINNED	.....
	TRIM FORM	[] LINEAR [■] EQ. PERCENTAGE	.....
		[] QUICK OPEN (ON/OFF)	
	TRIM MATERIAL: SEAT | PLUG	SS 316 STELLITED	.....|.....
	: CAGE | GUIDE BUSH		.....|.....
	FLOW	[] BELOW SEAT [] ABOVE SEAT	.....
	OUTLET VELOCITY	[■] < 7 M/SEC (WATER) | [] MAC NO. < 1/3	.....|.....
		(STM)	.....
	REQUIRED LEAKAGE CLASS	[] II [] III [] IV [■] V [] VI	.....
	NOISE LEVEL (dBA) (spec. 3.1.14)	LESS THAN 85 dBA	.....
	VACUUM SERVICE	[■] YES [] NO	.....
	ANTI CAVITATION TRIM	[■] YES [] NO	.....
PNEUMATIC ACTUATOR	MODEL NO. & SIZE	BIDDER TO SPECIFY	.....|.....
	CLOSE AT : OPEN AT (KG/CM2g)	1.0 | 0.2	.....|.....
	TRAVEL TIME FOR	< 10 SEC	.....
	OPEN TO CLOSE, CLOSE TO OPEN	BIDDER TO SPECIFY |	.....
	VALVE POSN. ON SIGNAL AIR FAILURE	[■] TO OPEN [] STAYPUT [] TO CLOSE	.....
	VALVE POSN. ON SUPPLY AIR FAILURE	[■] STAYPUT	.....
ACCESSORIES	POSITIONER	[■] REQUIRED [] NOT REQUIRED	.....
	AIR FILTER REGULATOR	[■] REQUIRED [] NOT REQUIRED	.....
	AIR LOCK RELAY	[■] REQUIRED [] NOT REQUIRED	.....
	POSITION LIMIT SWITCH	[■] REQUIRED [] NOT REQUIRED	.....
	POSITION TRANSMITTER	PART OF POSITIONER	.....
	SOLENOID VALVE	[■] REQUIRED [] NOT REQUIRED	.....
	E/P CONVERTOR	PART OF POSITIONER	.....
	JUNCTION BOX	[■] REQUIRED [] NOT REQUIRED	.....
	HAND WHEEL (SIDE MOUNTED)	[■] REQUIRED	.....
	LOCAL POSITION INDICATOR	[■] REQUIRED	.....
	ELECTRO PNEUMATIC POSITIONER	[] REQUIRED [■] NOT REQUIRED	.....

	DATA SHEET FOR CONTROL VALVES (WITH PNEUMATIC ACTUATOR)	SPECIFICATION NO.: PE-TS-427-145-I104	
		VOLUME	
		SECTION	
		REV. NO. 0	DATE : 11.11.16
		SHEET 44 OF 44	

Tag No.: **DM-6** Qty.: **ONE** Date Sheet No. PES-145-06-DS1-0

DATA SHEET – A & B

DATA SHEET – A FOR CONTROL VALVE (WITH PNEUMATIC ACTUATOR) (TO BE FILLED BY PURCHASER)			DATA SHEET – B (TO BE FILLED UP BY BIDDER)
PERFORMANCE OF VALVE	LINEARITY	± 2%	.....
	HYSTERISIS	± 1%	.....
	SENSITIVITY	± 0.5%	.....
	ACCURACY (OVERALL)	± 2%	.....

SERVICE CONDITION*

SL. No. +	LOAD	FLOW (T/HR)	INLET PR. KG/CM2(A)	OUTLET PR. KG/CM2(A)	TEMP DEG (C)	CALCU-LATED CV	% VALVE LIFT	VALVE O/L VELOCITY
1.	MINIMUM	4	5.7	0.2	45			
2.	MAXIMUM	40	4.0	0.2	45			

VALVE TYPE	[■] CAVITATION [] FLASHING [] HIGH DP
MAX SHUT OFF PRESS (KG/CM2g) 7 BODY DESIGN : PRESS (KG/CM2g) | TEMP (DEG C) 7/VACUUM | 55 IBR FORM III-C [] REQUIRED [■] NOT REQUIRED	....|..... .....
TOTAL WEIGHT (VALVE + ACTUATOR + ACCESSORIES) Kg	.....

FORM NO. PEM-6666-0

	Technical specification for **Control Valves with Accessories** (Pneumatically Operated)	SPECIFICATION NO. PE-TS-427-145-I104
		VOLUME **II-B**
		SECTION **D**
		REV. NO. 00 DATE: 11/11/16
		SHEET **01** OF 01

Tag No.…….. Quantity…….

APPLICABLE FOR TAG Nos.WHEREVER STATEMENT "REQUIRED" INDICATED IN THE INDIVIDUAL CV DATA SHEETS

DATA SHEET – A& B for ACCESSORIES

	DATA SHEET – A FOR CONTROL VALVE (WITH PNEUMATIC ACTUATOR) (TO BE FILLED BY PURCHASER)				DATA SHEET – B (TO BE FILLED-UP BY BIDDER)
POSITIONER	MFR. & MODEL NUMBER				
	BYPASS GAUGE S ENCL. CLASS	■ YES ☐ NO	■ THREE ☐ TWO	■ IP-65	
	INPUT SIGNAL (Kg / Cm^2)	■ 0.2 – 1.0 4-20 mA HART COMPATIBLE			
	OUTPUT SIGNAL (Kg / Cm^2)	TO SUIT ACTUATOR(MAX AIR PR TO ACTUATOR IS 3 KG/CM2)			
AIR FILTER REGULATOR TWO (2) Nos. PER CV **(Auto drain feature is required)**	MFR. & MODEL NUMBER				
	AIR SUPPLY PRESS (Kg / Cm^2 g)	■ 5-8 ☐			
	OUTPUT PRESS (Kg / Cm^2 g)	TO SUIT ACTUATOR			
	FILTER SIZE	5 MICRON			
	OUTPUT GAUGE	■ REQUIRED ☐ NOT REQUIRED			
AIR LOCK	MFR. & MODEL NUMBER				
	SET PRESS (Kg / Cm^2)				
	SUPPLY PRESS (Kg / Cm^2)	■ 5-8 ☐			
	RESET TYPE	AUTO			
	VENT PLUG	REQUIRED			
LIMIT SWITCH	MFR. & MODEL NUMBER				
	OPEN posn / INT posn / CLOSE posn	**1 NO.**	**---**	**1 NO.**	
	CONTACT TYPE	SPDT 2 NO + 2 NC			
	RATING (AC / DC)	5A 240V AC AND 0.5A 220V DC			
	ENCLOSURE CLASS	■ IP 65 ☐			
POSITION TRANSMITTER	MFR. & MODEL NUMBER	PART OF POSITIONER			
	TYPE				
	SUPPLY				
	OUTPUT RATING				
	ACCURACY				
	ENCLOSURE CLASS				
SOLENOID VALVE	MFR. & MODEL NUMBER				
	RATING	■ 24V DC ☐ 220V DC ☐ 240V AC ☐			
	TYPE	3-WAY (UNIVERSAL OPERATION TYPE)			
	OPERATION QUANTITY	☐ Stay put ☐ Interlock	☐ 1	☐ 2	
	COIL INSULATION CLASS	CLASS - H			
	ENCLOSURE CLASS	■ IP 65 ☐ NEMA 4 ☐			
HANDWHEEL	ORIENTATION	☐ TOP MOUNTED ■ SIDE MOUNTED			
JUNCTION BOX FRP type body material	NO. OF WAYS	☐ 24-WAYS ☐ AS REQUIRED ■ 36-Ways			
	SIZE AS	REQUIRED			
	CABLE GLANDS (Size / Quantity)	AS REQUIRED (Double Compression Type).			
	ENCLOSURE CLASS	■ IP 65 ☐			
I/P CONVERTER	INPUT SIGNAL / POWER SUPPLY	PART OF POSITIONER			
	SPLIT RANGE				
	ENCLOSURE CLASS				
	LINEARITY				
	HYSTERISIS				
Tubing & Fittings / per CV	**This is in addition to Tubing and fittings which are integral part of CV**	15 Meters of ¼ " SS TUBING, with 1 set of Fittings for each CV for connection to IA Header on one end and accessories on another end of CV.			
PAINTING	COLOUR SHADE :	RED/GREEN/OTHER			COMPANY SEAL
	THICKNESS				
	TYPE	EPOXY			NAME
					SIGNATURE
					DATE

SECTION-C

DATASHEET C

Tag No.…….. Quantity…….. Data Sheet No. PES-145-06-DS2-1

DATA SHEET C

DATA SHEET – C FOR CONTROL VALVE (WITH PNEUMATIC ACTUATOR)
(TO BE FILLED BY THE BIDDER AFTER THE AWARD OF CONTRACT)

GENERAL*	PROJECT	
	SERVICE	
	LOCATION	
	DUTY	
	PIPE SIZE (inlet / outlet)	
	PIPE MATERIAL (inlet / outlet)	
BODY	MODEL NUMBER	
	TYPE OF BODY : GUIDING : NO. OF PORTS	
	BODY SIZE : PORT SIZE : DESIGN CV	
	END CONNECTION & RATING (ANSI)	
	BODY MATERIAL	
	PACKING MATERIAL SINGLE / DOUBLE	
	BONNET TYPE	
	TRIM FORM	
	TRIM MATERIAL : SEAT | PLUG	
	TRIM MATERIAL : CAGE | GUIDE	
	FLOW	
	OUTLET VELOCITY	
	REQUIRED LEAKAGE CLASS	
	NOISE LEVEL (dBA)	
	VACUUM SERVICE	
	ANTI CAVITATION TRIM	
PNEUMATIC ACTUATOR	MODEL NO. & SIZE	
	CLOSE AT : OPEN AT (Kg / Cm^2g)	
	*TRAVEL TIME FOR OPEN TO CLOSE, CLOSE TO OPEN	
	*VALVE POSN. ON SIGNAL AIR FAILURE	
	*VALVE POSN. ON SUPPLY AIR FAILURE	
ACCESSORIES	POSITIONER(SMART)	
	AIR FILTER REGULATOR	
	AIR LOCK RELAY	
	POSITION LIMIT SWITCH	
	POSITION TRANSMITTER	
	SOLENOID VALVE	
	E / P CONVERTER	
	JUNCTION BOX	
	HAND WHEEL (SIDE MOUNTED)	
	LOCAL POSITION INDICATOR	

Tag No……. Quantity…….. Data Sheet No. PES-145-06-DS2-1

DATA SHEET C

DATA SHEET – C FOR CONTROL VALVE (WITH PNEUMATIC ACTUATOR)
(TO BE FILLED BY THE BIDDER AFTER THE AWARD OF CONTRACT)

PERFORMANCE OF VALVE	HYSTERSIS	
	LINEARITY	
	SENSITIVITY	
	ACCURACY (Overall)	

SERVICE CONDITION*	**SL.+ NO.**	**LOAD**	**FLOW (T/HR)**	**INLET PR. (KG/CM^2 (A)**	**OUTLET PR. (KG/CM^2 (A)**	**TEMP DEG. C**	**CALCULATED CV**	**% VALVE LIFT**	**VALVE O/L VELOCITY**
	VALVE TYPE								
	* MAX SHUT OFF PRESS (**(KG/CM^{2}g)**								
	* BODY DESIGN : PRESS (**(KG/CM^{2}g)** **| TEMP (DEG. C)**								
	* IBR FORM III-C								

TOTAL WEIGHT (VALVE + ACTUATOR + ACCESSORIES) KG.

SEA WORTHY PACKING **APPLICABLE / NOT APPLICABLE**

Tag No……. Quantity…….. Data Sheet No. PES-145-06-DS2-1

DATA SHEET C FOR ACCESSORIES

DATA SHEET – C FOR CONTROL VALVE (WITH PNEUMATIC ACTUATOR)
(TO BE FILLED BY THE BIDDER AFTER THE AWARD OF CONTRACT)

POSITIONER	MFR. & MODEL NUMBER	
	BYPASS / GAUGES / ENCL. CLASS	
	INPUT SIGNAL (Kg / Cm^2)	
	OUTPUT SIGNAL (Kg / Cm^2)	
AIR FILTER REGULATOR	MFR. & MODEL NUMBER	
	AIR SUPPLY PRESS (Kg / Cm^2 g)	
	OUTPUT PRESS (Kg / Cm^2 g)	
	OUTPUT GAUGE	
	FILTER SIZE	
	AUTO DRAIN FEATURE	
AIR LOCK	MFR. & MODEL NUMBER	
	SET PRESS (Kg / Cm^2)	
	SUPPLY PRESS (Kg / Cm^2)	
	RESET TYPE	
	VENT PLUG	
LIMIT SWITCH	MFR. & MODEL NUMBER	
	OPEN posn / INT posn / CLOSE posn	
	CONTACT TYPE	
	RATING (AC / DC)	
	ENCLOSURE CLASS	
POSITION TRANSMITTER	MFR. & MODEL NUMBER	
	TYPE	
	SUPPLY	
	OUTPUT RATING	
	ACCURACY	
	ENCLOSURE CLASS	
SOLENOID VALVE	MFR. & MODEL NUMBER	
	RATING	
	OPERATION / QUANTITY	
	COIL INSULATION CLASS	
	ENCLOSURE CLASS	
HANDWHEEL	ORIENTATION	
JUNCTION BOX	NO. OF WAYS	
	SIZE	
	CABLE GLANDS (Size / Quantity)	
	ENCLOSURE CLASS	
	BODY MATERIAL	
I/P CONVERTER	INPUT SIGNAL / POWER SUPPLY	
	SPLIT RANGE	
	ENCLOSURE CLASS	
	LINEARITY	
	HYSTERISIS	
Cu./SS Tubing & Fittings / per CV	15 Meters of ¼ " PVC coated SS Tubing, with 1 set of Fittings for each CV for connection to IA Header on one end and accessories on another end of CV.	
PAINTING	**COLOUR/SHADE**	
	THICKNESS (DFT)	
	TYPE	

	COMPANY SEAL
	NAME
	SIGNATURE
	DATE

SECTION-C

QUALITY PLAN

PEM :: C&I	STANDARD QUALITY PLAN FOR CONTROL VALVE (PNEUMATIC)	QUALITY PLAN NO.: **PE-QP-999-145-I 006**
		VOLUME IIB
		SECTION C
		ISSUE NO. 2 REV. NO. 00 DATE: 24.12.2016

Sl. No.	Component / operation	Characteristics Checked	* Category	Type/Method of Check	Extent of Check	Reference documents	Acceptance Norms	Format of Records	Agency $			Remarks
									P	W	V	
1.0	**INCOMING MATERIAL**											
1.1	Body & Bonnet casting / forgings, plug, valve stem, seat ring/cage.	1. Physical, Chemical properties	MA	Physical, Chemical tests	One/ Heat(HT Batch)	Approved drg. / data sheet /	Approved drg. / data sheet /	Test Certificate	3	---	2,1	TC for body/bonnet from foundry only
		2. Heat Treatment	MA	Review of H.T. Chart	Each H.T.	Approved drg. / data sheet /	Approved drg. / data sheet /	Test Certificate	3/2	2	1	1.IBR Certification (if applicable) to be verified by BHEL. 2.Applicable for body /bonnet only
		3. Internal quality of castings	MA	RT for Body & UT for Bonnet	100%	ASME B 16.34	ASME B 16.34	Test Report / FILM	3/2	2	1	Applicable for body and bonnet for rating ANSI 900 and above.
		4. Surface Quality	MA	1. Visual	100%	MSS-SP-55	MSS-SP-55	Test Certificate	3/2	---	2	
				2. MT/PT	100%	ASME B 16.34	ASME B 16.34	Test Certificate	3	2	1	After Machining on machined surface only
		5. Pressure test for shell	MA	Hyd. Test	100%	ISA-S-75.19/ ASME B 16.34	ISA-S-75.19/ ASME B 16.34	Test Certificate	2	2	1	For Body & Bonnet after machining.
1.2	Diaphragm	1. Surface Quality	MA	Visual	100%	Mfr. standard	Mfr. standard	Test Certificate	3/2	---	2	

LEGEND: * CR - Critical characteristics; MA - Major characteristics; MI - Minor characteristics

RT- Radiographic Test; UT – Ultrasonic Test; PT – Dye penetrant Test; MT- Magnetic Test

$ P - Agency Performing the Test.; W - Agency Witnessing the Test.; V - Agency Verifying the Test.

1 - BHEL; 2 - Vendor; 3 - Sub-vendor

Sl. No.	Component / operation	Characteristics Checked	* Category	Type/Method of Check	Extent of Check	Reference documents	Acceptance Norms	Format of Records	Agency $ P	Agency $ W	Agency $ V	Remarks
		2. Hardness	MA	Measurement	100%	Mfr. standard	Mfr. standard	Test Certificate	3/2	---	2	
		3. Endurance / Life cycle	MA	Cyclic test 10,000 cycles	One / Type	10,000 cycles/ Mfr. standard.	No damage	Test Certificate	3/2	---	2,1	
1.3	Spring	1. Composition	MA	Chemical-Analysis	One sample/ Heat	Material spec. / Mfr. standard	Material spec. / Mfr. standard	Test Certificate	3	---	2	
		2. Mech. Properties	MA	Mech. Test	One sample/ Heat	Material spec. / Mfr. standard	Material spec. / Mfr. standard	Test Certificate	3	---	2	
		3. Performance	MA	1. Stiffness ratio	100%	Material spec. / Mfr. standard	Material spec. / Mfr. standard	Test Certificate	3	---	2	
				2. Scragging	100%	Material spec. / Mfr. standard	Material spec. / Mfr. standard	Test Certificate	3	---	2	
				3. Cyclic test (Endurance)	One / type	10,000 cycles	Material spec. / Mfr. standard	Test Certificate	3	---	2,1	
				4. Dimension (Measurement)	One sample/ Lot	Mfr. standard	Mfr. standard	Record	3	---	2	
1.4	Electrical items [Limit switches, Solenoids, Position Transmitter(if provided externally)]	1. Routine Test	MA	HV, IR, Continuity function	100%	Relevant Standards	Relevant Standards	Test Certificate	3	---	2	
		2. Degree of protection	MA	IP/NEMA Tests	One sample / type	Approved Data sheet	Approved Data sheet	Test Certificate	3	---	2,1	

LEGEND: * CR - Critical characteristics; MA - Major characteristics; MI - Minor characteristics
RT- Radiographic Test; UT – Ultrasonic Test
PT – Dye penetrant Test; MT- Magnetic Test
$ P - Agency Performing the Test.; W - Agency Witnessing the Test.; V - Agency Verifying the Test.
1 - BHEL; 2 - Vendor; 3 - Sub-vendor

Sl. No.	Component / operation	Characteristics Checked	* Category	Type/Method of Check	Extent of Check	Reference documents	Acceptance Norms	Format of Records	Agency $			Remarks
									P	W	V	
1.5	Pressure Gauges	1. Performance	MA	Review of calibration certificates	100%	Mfr. Standard	Mfr. Standard	Test Certificate	3	---	2	
		2. Marking	MA	Visual	100%	Mfr. standard	Mfr. standard	Records	3	---	2	
2.0	**IN PROCESS INSPECTION**											
2.1	After machining, i, Body ii Bonnet iii Plug iv Valve Stem v seat ring/cage	1. Surface flaws	MA	Visual & MT/PT	100% (on accessible surfaces)	ASME B 16.34	ASME B 16.34	Test Records	2	---	1	Butt weld ends shall be included.
		2. Dimensional checks	MA	Measurement	100%	Mfr. Standard	Mfr. Standard	Records	2	---	1	
		3. Hard facing (wherever applicable)	MA	Hardness Measurement	One sample/Lot	Mfr. Standard	Mfr. Standard	Records	2	---	1	
3.0	**TESTS ON COMPLETED VALVE**											
3.1	Actuator Chamber	Leakage & Strength	MA	Pneumatic test	100%	Mfr. Standard	No Leakage	Test Certificate	2	1	1	Refer Note-4
3.2	Body	Leakage and Pressure test (Body Mount Leakage)	MA	Hydro test	100%	ISA - S-75.19/ ASME B16.34	No Leakage	Test Certificate	2	1	1	Refer Note-4
3.3	Seat leakage test for completed valve	Seat Leakage	MA	Pneumatic Test	100%	FCI-70.2	FCI-70.2	Test Certificate	2	1	1	Refer Note-4
4.0	**OPERATION TEST ON COMPLETED VALVE (Final inspection)**	1. Valve Travel	MA	Measurement	100%	Mfr. Procedure	Approved drg. / data sheet	Test Report	2	1	1	Refer Note-4
		2. Opening/Closing time	MA	Measurement	100%	Mfr. Procedure	Approved drg. / data sheet	Test Report	2	1	1	Refer Note-4
		3. Linearity/cam characteristic	MA	Measurement	100%	Mfr. Procedure	Approved drg. / data sheet	Test Report	2	1	1	Refer Note-4

LEGEND: * CR - Critical characteristics; MA - Major characteristics; MI - Minor characteristics

RT- Radiographic Test; UT – Ultrasonic Test

PT – Dye penetrant Test; MT- Magnetic Test

$ P - Agency Performing the Test.; W - Agency Witnessing the Test.; V - Agency Verifying the Test.

1 - BHEL; 2 - Vendor; 3 - Sub-vendor

Sl. No.	Component / operation	Characteristics Checked	* Category	Type/Method of Check	Extent of Check	Reference documents	Acceptance Norms	Format of Records	Agency $ P	Agency $ W	Agency $ V	Remarks
		4. Repeatability	MA	Measurement	100%	Mfr. Procedure	Approved drg. / data sheet	Test Report	2	1	1	Refer Note-4
		5. Hysteresis	MA	Measurement	100%	Mfr. Procedure	Approved drg. / data sheet	Test Report	2	1	1	Refer Note-4
		6. Sensitivity	MA	Measurement	100%	Mfr. Procedure	Approved drg. / data sheet	Test Report	2	1	1	Refer Note-4
		7. Accuracy (Overall)	MA	Measurement	100%	Mfr. Procedure	Approved drg. / data sheet	Test Report	2	1	1	Refer Note-4
		8. Control Valve characteristics / CV Test	MA	♦Measurement (Press. vs. discharge and discharge vs. opening 0-100% in steps of 10%)	One per type	Mfr. Procedure	Approved drg. / data sheet	Test Certificate	2	--	1	♦Size = Body & port size Or Body size & CV for non std port. Refer Note 1.
		9. Operation of limit switch & solenoids and other accessories	MA	Function	100%	Mfr. Procedure	Approved drg./ data sheet	Test Report	2	1	1	On assembled valve Refer Note-4
		10. Overall dimensions	MI	Visual and dimensional	100%	Approved drg. / data sheet	Approved drg./ data sheet	Records	2	1	1	Refer Note-4
		11. Pre defined valve position in case of air failure	MA	Visual	100%	Approved drg. / data sheet	Approved drg. / data sheet	Test Certificate	2	1	1	
		12. Cleanliness, painting, stamping (for direction of flow), Tag No.	MA	Visual and dimensional, paint thickness	100%	Mfr. Procedure	Approved drg./ data sheet	Test Certificate	2	1	1	
		13. Surface Quality	MA	Visual	100%	MSS-SP-55	MSS-SP-55	Test Certificate	3/2	---	2,1	

LEGEND:
* CR - Critical characteristics
MA - Major characteristics
MI - Minor characteristics

RT- Radiographic Test
UT – Ultrasonic Test

PT – Dye penetrant Test
MT- Magnetic Test

$ P - Agency Performing the Test.
W - Agency Witnessing the Test.
V - Agency Verifying the Test.

1 - BHEL
2 - Vendor
3 - Sub-vendor

Sl. No.	Component / operation	Characteristics Checked	* Category	Type/Method of Check	Extent of Check	Reference documents	Acceptance Norms	Format of Records	Agency $			Remarks
									P	W	V	
5.0	**AUXILIARY ITEMS (Performance test of auxiliary items shall be performed on the completely assembled valve)**											
5.1	Positioner	Overall leakage after assembly including Nozzles leakage	MA	Leak Test (in the steady state input signal)	100 %	Mfr. Standard	No leakage	Test Certificate	3/2	---	---	Certificate of Conformance (C.O.C)
5.2	Air filter regulator	1. Normal air consumption	MA	Measurement	Each type	Mfr. Standard	No leakage	Test Certificate	3/2	---	---	(C.O.C)
		2. Overall leakage	MA	Visual (soap solution)	100 %	Mfr. Standard	No leakage	Test Certificate	3/2	---	---	(C.O.C)
5.3	Air lock relay	Performance Test	MA	Leakage test	100%	Mfr. Standard	No leakage	Test Certificate	3/2	---	---	(C.O.C)
5.4	Electronic position transmitter(not applicable if provided integral to smart positioner)	1. Accuracy	MA	Operation	100%	Approved data sheet /	Approved data sheet /	Test Certificate	2	1	---	(C.O.C)
5.5	Current to Pneumatic converter(not applicable for smart positioner)	1. Physical Verification Make/Model	MA	Visual	100%	Approved drg. / data sheet	Approved drg. / data sheet	Test Certificate	2	---	---	(C.O.C)
		2. Degree of Protection	MA	IP/NEMA test	Each type	Relevant Standard	Relevant Standard	Test Certificate	3	---	---	(C.O.C)
		3. Linearity	CR	Measurement	100%	Approved drg. / data sheet /	Approved drg. / data sheet /	Inspection Report	2	---	---	(C.O.C)
		4. Hysterisis	CR	Measurement	100%	Approved drg. / data sheet /	Approved drg. / data sheet /	Inspection Report	2	---	---	(C.O.C)
5.6	Smart Positioner	1. Physical Verification Make/Model	MA	Visual	100%	Approved drg. / data sheet	Approved drg. / data sheet	Test Certificate	2	---	---	(C.O.C)

LEGEND: * CR - Critical characteristics; MA - Major characteristics; MI - Minor characteristics

RT- Radiographic Test; UT – Ultrasonic Test; PT – Dye penetrant Test; MT- Magnetic Test

$ P - Agency Performing the Test.; W - Agency Witnessing the Test.; V - Agency Verifying the Test.

1 - BHEL; 2 - Vendor; 3 - Sub-vendor

Sl. No.	Component / operation	Characteristics Checked	* Category	Type/Method of Check	Extent of Check	Reference documents	Acceptance Norms	Format of Records	Agency $			Remarks
									P	W	V	
	(As Applicable)	2. Degree of Protection	MA	IP/NEMA test	Each type	Relevant Standard	Relevant Standard	Test Certificate	3	---	---	(C.O.C)
		3. Linearity	CR	Measurement	100%	Approved drg. / data sheet /	Approved drg. / data sheet /	Inspection Report	2	---	---	(C.O.C)
		4. Hysterisis	CR	Measurement	100%	Approved drg. / data sheet /	Approved drg. / data sheet /	Inspection Report	2	---	---	(C.O.C)
		5. Calibration with Hand Held Communicator	MA	Measurement	Each type	Mfr. Standard	Mfr. Standard	Test Certificate	2	---	---	(C.O.C)
6.0	**PAINTING**	Soundness of Painting	MA	Visual and Measurement	100%	Mfr. Standard	Mfr. Standard	Inspection Report	2	---	---	Refer Note-2
7.0	**PACKING**	Soundness of Packing against transit damage	MA	Visual	100%	Mfr. Standard	Mfr. Standard	Inspection Report	2	---	---	Refer Note-3

NOTES:

1. In case valid CV test certificate for a similar control valve (same size, same CV, same trim characteristics) is not submitted to BHEL by the vendor, CV test shall be conducted at FCRI/Any govt. approved laboratory/ BHEL approved Laboratory.
2. In the absence of BHEL spec. for painting, vendor to obtain BHEL's approval on their painting specification / procedure.
3. Sea worthy packing shall be provided, if called for in the Data sheets.
4. The quantum of check shall be 100% for manufacturer and 10% for BHEL/BHEL nominated inspection agency.
5. IBR certificates in Form III-C shall be submitted if called for in the specification/datasheet.
6. Copies of all TC's(Test Certificates) for materials duly correlated with Heat Nos., TC's for electrical items and mechanical tests(Leak/Operation), C.O.C's(Certificates of Conformance) shall be submitted to BHEL for verification and acceptance.

LEGEND:					
* CR - Critical characteristics	RT- Radiographic Test	PT – Dye penetrant Test	$ P - Agency Performing the Test.	1 - BHEL
MA - Major characteristics	UT – Ultrasonic Test	MT- Magnetic Test	W - Agency Witnessing the Test.	2 - Vendor
MI - Minor characteristics			V - Agency Verifying the Test.	3 - Sub-vendor

SECTION – C

BILL OF QUANTITY-MAIN SUPPLY

BILL OF QUANTITY-MAIN SUPPLY

[A] CONTROL VALVES COMPLETE WITH POSITIONER AND ALL ACCESSORIES MOUNTED, TUBED AND TERMINATED ON JB

A	MAIN SUPPLY		
Sl. No	**Tag No**	**Description**	**Totoal Qty for station**
1	AS-2	AUXILLARY STEAM TO D/A PEGGING	1
2	CD-11	MAIN CONDENSATE CV 30%	1
3	CD-14	MAIN CONDENSATE CV 100%	1
4	CD-21	EXCESS RETURN TO CST	1
5	CD-25	CEP MINIMUM RECIRCULATION	1
6	CD-71	CONDENSATE FOR VALVE GLAND SEALING	1
7	CRH-2	DEAERATOR PEGGING FROM CRH	1
8	DR-2	HPH-6 NORMAL DRAIN TO HPH-5	1
9	DR-6	HPH-6 ALT DRAIN TO DEAERATOR	1
10	DR-9	HPH-6 ALT DRAIN TO HP FLASH TANK	1
11	DR-13	HPH-5 DRAIN TO DEAERATOR	1
12	DR-16	HPH-5 ALT DRAIN TO HP FLASH TANK	1
13	DR-19	LPH-3 NORMAL DRAIN TO LPH-2	1
14	DR-22	LPH-3 ALT DRAIN TO LP FLASH TANK	1
15	DR-25	LPH-2 NORMAL DRAIN TO LPH-1	1
16	DR-28	LPH-2 ALT DRAIN TO LP FLASH TANK	1
17	DR-38	DEAERATOR OVERFLOW TO LP F/TANK	1

18	FD-17	FEED CONTROL VALVE(HIGH CAPACITY)	1
19	FD-20	FEED CONTROL VALVE (LOW CAPACITY)	1
20	DM-2	DM EMERGENCY MAKE UP TO HOTWELL	1
21	DM-6	DM NORMAL MAKE UP TO HOTWELL	1
[B]	1/4 " SS TUBING(15 METER FOR EACH TAG)		315 METER
[C]	SS FITTINGS- FOR EACH TAG		1 LOT
1	SS FITTINGS for connection to Air Filter Regulator- FOR EACH TAG		1 LOT
2	SS FITTINGS for connection to Air Lock Relay- FOR EACH TAG		1 LOT
3	SS FITTINGS for connection to IA Header Isolation Valve - FOR EACH TAG		1 LOT
4	SS EQUAL TEE - FOR EACH TAG		1 LOT
5	SS 1/2 " NPT(M) X 1/4 " OD TUBE CONNECTOR- FOR EACH TAG		1 LOT
[D]	VALVE DIAGNOSTIC AND CONFIGURATION SOFTWARE (FOR ALL TAGS)		1 LOT

SECTION – C

BILL OF QUANTITY-SPARES

BILL OF QUANTITY- SPARES

LIST OF COMMISSIONING SPARES

S NO	ITEM DESCRIPTION	QUANTITY FOR STATION
1	Gaskets	One(1) set with each control valve tag
2	Gland Packing	One(1) set with each control valve tag

SECTION – D

- **EQUIPMENT SPECIFICATION (PES-145-06)**
- **SPECIFICATION FOR SMART POSITIONER (PES-145-06A)**
- **HOOK-UP DIAGRAM(PES-145-06B)**
- **GUIDELINES FOR PACKING(PES-145-06C)**
- **SUB-VENDOR LIST**

SECTION-D

EQUIPMENT SPECIFICATION
(PES-145-06)

1.0 SCOPE

1.1 This specification covers the Design, Manufacture, Inspection and Testing at the manufacturer's works, proper packing for transportation and delivery to site of Control valve (with Pneumatic/Electric Actuator as identified in the datasheet-A) for use in Utility/Captive Power Station/Combined Cycle Station.

1.2 Expander/Reducer between valve body & pipe shall be in BHEL's scope of supply. However, any other expander/reducer required shall be in bidder's scope of supply.

2.0 CODES AND STANDARDS

2.1 As a minimum requirement, the latest revision/version of the following (or equivalent) standards shall be complied as a minimum requirement :-

Indian Boiler Regulation (IBR)

Allowable Seat leakage	:	FCI-70.2
Pressure & Temperature ratings	:	ANSI-B16.34
Enclosure class	:	IEC-144 / NEMA / IS-13947
Control Valves Sizing	:	ISA S-75
Electric Motor operated Actuators	:	IS-9334

3.0 TECHNICAL REQUIREMENTS

The Control valve, Actuator and the accessories shall be suitable for continuous operation under an ambient temperature of 0-60°C and Relative Humidity of 0-95% unless specified otherwise in volume IIB Section-B or Section-C.

3.1 Control Valve

The control valve shall be suitably designed for the process operating conditions and system characteristics as specified in the Data Sheet-A.

3.1.1 The control valve shall be of globe/angle body design, as per datasheet, with single port. Valve trim shall be cage guided balanced type for valve sizes $\geq$ 3" and above. The valve trim shall be suitable for quick replacement without any cutting or welding. Anti-cavitation trims shall be provided for valves with cavitation service and hardened trims for flashing services.

3.1.2 The trim material and body material has been specified in the Datasheet-A. Bidder to offer body material and trim material combination as per the datasheet. Wherever there is a deviation from the datasheets, bidder to furnish the documentary proof for confirming superior trim material/body material selection along with their offer. BHEL/Customer reserves the right to accept/reject any variation in the specification.

3.1.3 Asbestos shall not be used for the packing or any other component.

3.1.4 The valve bonnet and packing shall be suitable for the service conditions as in Data Sheet-A. Gland sealed type bonnets are not acceptable. Double packing is mandatory for applications involving vacuum service. For valves where downstream is subjected to vacuum, flow action shall be "flow to close" (over the seat). Bonnets having Teflon packing shall have valve stem finished to 2-4 microns. Packing material requiring lubrication will not be acceptable.

Type of bonnet shall be according to the service condition. Extension bonnets shall be provided when the maximum temperature of the flowing fluid is greater than 280 or unless otherwise specified.
Cast Steel (CS) yokes shall be offered for CEP Minimum Recirculation valve/GSC minimum recirculation control valve. Cast Iron (CI) yokes are not acceptable for this service.

3.1.5 The valve end connection as specified in Data Sheet-A shall conform to ANSI B16.25 for Butt Weld connection, ANSI B16.11 for Socket Weld connection and ANSI B16.5 for flanged ends. Tolerances on end to end, center to center, center to face shall be in accordance with ASME B16.10. The end connections shall be Socket Welded for sizes up to 50 NB and Butt Welded for sizes above 50 NB.

3.1.6 The valve seat leakage shall be as per FCI-70.2. The leakage class shall be as per Data Sheet-A.

3.1.7 The valve body shall have the direction of flow embossed on all valves.

3.1.8 The sizing shall conform to the requirements of ISA S75.01, and the valve capacity shall be selected so as to meet the following:

Valve with Linear Characteristic	-	Normal Flow (Design Point)	:	70-75% valve lift.
	-	Max. Flow	:	90% valve lift.
	-	Min. Flow	:	>10% valve lift.
Valve with Equipercentage Characteristic	-	Normal Flow (Design Point)	:	75-85% valve lift.
	-	Max. Flow	:	90% valve lift.
	-	Min. Flow	:	>10% valve lift.
ON/OFF Quick open Characteristic	-	1.1 times the CV calculated on the basis of maximum flow condition.		

The valve offered shall be capable of handling 120 % of the required maximum flow.

3.1.9 Calculation for valve sizing, velocity and noise shall be subject to purchaser's approval during contract stage. However responsibility of proper selection and design for the duties specified lies with the vendor. Any modifications required to be done on the valves or actuators & accessories to achieve satisfactory performance of the control system shall be done without any commercial & delivery implication.

3.1.10 The valve outlet velocities shall be limited to the following values, unless otherwise specified in the Data sheet-A.

i)	Liquid service	<=	8 m/sec
ii)	Steam service	<=	150 m/sec
iii)	Flashing service	<=	50% of sonic velocity for flashing services.

3.1.11 For flashing duty, trim design shall be such that the vapour bubbles are kept away from valve body.

3.1.12 For cavitation service, the trim design shall be of multistage pressure drop type, so as to avoid cavitation altogether, instead of keeping cavitation away from valve parts.

3.1.13 The equivalent weighted sound level measured at 1.5 metre above floor level in elevation and 1 metre horizontally from the control valve expressed in decibels to a reference of 0.0002 microbar shall not exceed 85 dBA (without pipe insulation).The offer shall include noise prediction calculations for each valve.

3.1.14 In case of predicted noise level above 85 dBA, same shall be brought down to acceptable noise level i.e. below 85 dBA through Source treatment (proper valve trim & valve body selection). Path treatment (LNP/ Diffuser/ Cartridge/ Silencer etc.), if any shall be subject to Customer's/Owner's approval.

3.1.15 In case of wrong selection/mal operation of valve and for associated actuator during guarantee period, the vendor shall replace the valve suitably with a modified/new valve of design as approved by purchaser and all the expenses for replacement, rectification/modification including transportation both ways will be at vendor's expenses.

3.2 **ACTUATORS-** The control valves shall be operated either pneumatically (with pneumatic actuator) or electrically (with electric actuator).
For pneumatic actuator, clause nos. 3.2.1 through 3.2.6 to be followed.

For electric actuator, please refer the technical specification for electric actuator (Refer Document No. PES-145-06D).

3.2.1 **Pneumatic Actuator**

The actuator shall be designed for a thrust of 120% of valve's shut-off pressure at an airline supply pressure of 5 Kg/Sq. cm.

The pneumatic actuators shall be employed for modulating or open/close duty, as specified in Data Sheet-A. The bidder shall be responsible for proper selection and sizing of valve actuators in accordance with the pressure drops, shut off pressure and valve travel.
The pneumatic spring opposed diaphragm actuator or piston actuator as the case may be for modulating duty shall be capable of positioning the associated valve at desired opening for all the operating conditions specified.

3.2.2 The pneumatic actuator for open/close duty shall be suitable for fast opening/closing of the associated valve.

3.2.3 The actuator design shall allow valve assembly to be mounted at 45° inclination on either side in the vertical plane.

3.2.4 The actuators shall be suitably sized to ensure that the associated valve travel time from full open to full closed position and vice versa is less than 10 seconds or as specified in the datasheet under the most stringent service conditions.

3.2.5 The actuator's hand wheel shall have OPEN & CLOSE direction marking and clockwise rotation as viewed from front shall close the valve.

3.2.6 Each actuator shall be provided with a mechanical pointer attached to stem, moving over a graduated scale with markings, for OPEN, 25%, 50%, 75%, CLOSE positions.

3.3 **Accessories for Control valve with Pneumatic Actuator**

The bidder shall offer all the accessories as specified in the Data Sheet - A for the Pneumatic Actuators under modulating or OPEN/CLOSE duty. The accessories specified shall be supplied duly mounted on the valve actuator and piped with PVC covered copper/ SS tube and flare-less brass/ SS fittings etc. as per the hook up diagram (Refer drawing no. PES-145

3.4 **Painting** of the control valve assembly shall be as per the Painting Specification attached elsewhere in this technical specification. In the absence of specification for painting, vendor to submit their standard painting procedure for painting for BHEL's approval. Epoxy based paint (corrosion-resistant) to be provided for control valves for coastal environment.

3.5 **Sub-vendor list** –

The sub-vendors shall be as per the list enclosed elsewhere in this specification. In case the bidder proposes sub-vendors other than those listed in the specification, the same shall be subject to BHEL's/Customer's approval.

4.0 TESTING AND INSPECTION

4.1 The testing and inspection of the equipment/items shall be in line with the approved QAP

4.2 The cost of all tests as per the approved QAP will be deemed to have been included in the bid.

4.3 In case, the bidder is supplying the valve from outside India, the third party inspection shall be arranged and considered by the bidder in their offer.

5.0 SPARES AND CONSUMABLES

5.1 **Start-up/Commissioning Spares**

The bidder shall supply all the start-up/commissioning spares as per the BOQ given in the technical specification.

5.2 **Mandatory Spares**

The bidder shall supply all the mandatory spares as per the BOQ given in the technical specification.

6.0 DRAWINGS AND DOCUMENTS

6.1 The bidder shall furnish the following documents along with the bid: 4 Sets

6.1.1 Data sheet-B, completely filled-up along with all enclosures.

6.1.2 Schedule of prices in attached format (VOL.-III).

6.1.3 Quality Plan duly signed & stamped.

6.1.4 All relevant Catalogs with detailed technical information.

6.2 **The successful bidder shall furnish the following documents to BHEL during the contract stage viz. after the award of contract**:

5 sets of the following documents for approval + 2 sets of CDs:

6.2.1 CONTROL VALVE DOCUMENTS (Drg. No. PE-VO-XXX-145-I004) including the following:-

(a) Assembly (dimensional) drawings.

(b) Valve Edge preparation details.

(c) Data sheet-C completely filled-up.

(d) Hook-up diagram of Control Valve with Actuator & Accessories.

(e) Valve & Actuator assembly dimensional drawings with weights.

(f) All calculations like CV, Noise Level, Valve Outlet Velocity, Actuator sizing etc.

(g) All relevant catalogues for models of the valves as well as accessories finalized.

6.2.2 QUALITY PLAN (Drg. No. PE-QP-XXX-145-I006) duly signed and stamped.

6.3 **Final documentation:**

Documents / drawings to be furnished by the successful bidder shall be as follows:
15 sets with 6 CD–ROMS of:-

6.3.1 Category I & IV approved CONTROL VALVE DOCUMENTS
6.3.2 Test certificates
6.3.3 Operation & maintenance manuals for Control Valve, Actuator and all accessories

7.0 MARKING AND PACKING

7.1 Marking

A stainless steel metal nameplate should be permanently fixed on each equipment giving its tag number and technical specifications.

7.2 Packing

All equipment / materials shall be suitably packed and protected for the entire period of dispatch, storage and erection against impact, abrasion, corrosion, incidental damage due to vermin, sunlight, high temperature, rain, moisture, humidity, dust, sea water spray (where applicable) as well as rough handling and delays in transit and storage in open. Guidelines for packing are enclosed (Refer specification no. PES-145-06C).

8.0 APPLICABLE DATA SHEET FORMS

This document shall be read with one or more of the following data sheet forms:

- Data sheet A&B for Control Valve with Pneumatic Actuator : Data sheet no. PES-145-06-DS1-1
- Data sheet C for Control Valve with Pneumatic Actuator : Data sheet no. PES-145-06-DS2-1

SECTION-D

SPECIFICATION FOR SMART POSITIONER (PES-145-06A)

1.0 Electrical

Input Signal	4-20mA
Power Supply	Loop Powered from the output card of Control System (12-30 V DC)
Hart Protocol	Compatibility For Remote Calibration & Diagnostic (Super-Imposed HART Signal On Input Signal (4-20mA)
Valve Position Feedback (4-20mA)	Position Sensing 4-20mA O/P Signal For Control System To Be Provided. If non contact type of Position feedback signal is required, Position transmitter to be separately provided.

2.0 Environment

Operating Temperature	(-) 30 To 80 Deg.C
Humidity	0-95%
Protection Class	IP-65 (Minimum)

3.0 Software For Configuration & Diagnostic

Software	Windows Based Software, Software Shall Meet The Requirement For Configuration, Diagnostics, Calibration And Testing Of the Actuator. Valve positioning timing, actuator leakage, and Valve Wear & tear, fault alarm to be offered as a minimum. Easily up gradable with same hardware and compatible with any HART management systems /AMS.
Diagnostic/Test Features (Optional)	Advanced Diagnostic Features Like Stroke On Line Partial Closure Test, Valve Signature Analysis (Online graphical representation), Step Response Test, Valve Friction/Jamming Detection Etc To Be Provided.

		Factory Valve Signature Tests Reports (Pr Vs Valve Travel And Travel Vs I/P Signal) Are To Be Provided.
Hardware	PC	For Configuration/Software (OPTIONAL)
Test Certificates		Test Certificates As Per Manufacture Standard/Relevant Standard Are To Be Submitted.

Configuration / Remote Calibration, Auto & Manual Calibration Shall Be Possible.

4.0 Modes

Valve Action	Direct & Reverse, Valve Action. (Same positioner for Single Acting or Double Acting And no separate relays required for changing from Single acting to double).
Flow Characterization	Possible to fit valve characteristic curve linear & Equal percentage
Fail Safe/Fail Freeze (Optional)	Fail Safe/Fail Freeze feature is to be provided.

5.0 Performance

Characteristic Deviation	<=0.75% of span
Ambient temp effect	<=0.01%/Deg C or better.
Dead Band	Adjustable 0.1 to 10%.
Scan Time	10ms
Resolution	<=0.05%
Sensitivity/Linearity	0.3-0.4% of FS
Repeatability	0.32% of FS
Auto-Tune	Yes

Leak Test	Yes

7.0 EMC & CE compliance

Required International Standard Like EN/IEC.	To En50081-2&En50082 or equivalent

8.0 Accessories

In Built Operator Panel	Display With Push Buttons For Configuration And Display On The Positioner Itself
Hand Held Hart Calibrator (Optional)	Universal Hart Calibrator To Be Provided, One Per Unit.
Press Gauge Block	For Supply & Output Pr., Filter Regulator Other Accessories Shall Be Provided As On Required Basis For Making System Complete.
Electrical cable entry	½-Npt, side or bottom entry to avoid water Ingress.

SECTION-D

HOOK-UP DIAGRAM (PES-145-06B)

CONTROL VALVE HOOK-UP DIAGRAM
(WITH SMART POSITIONER)

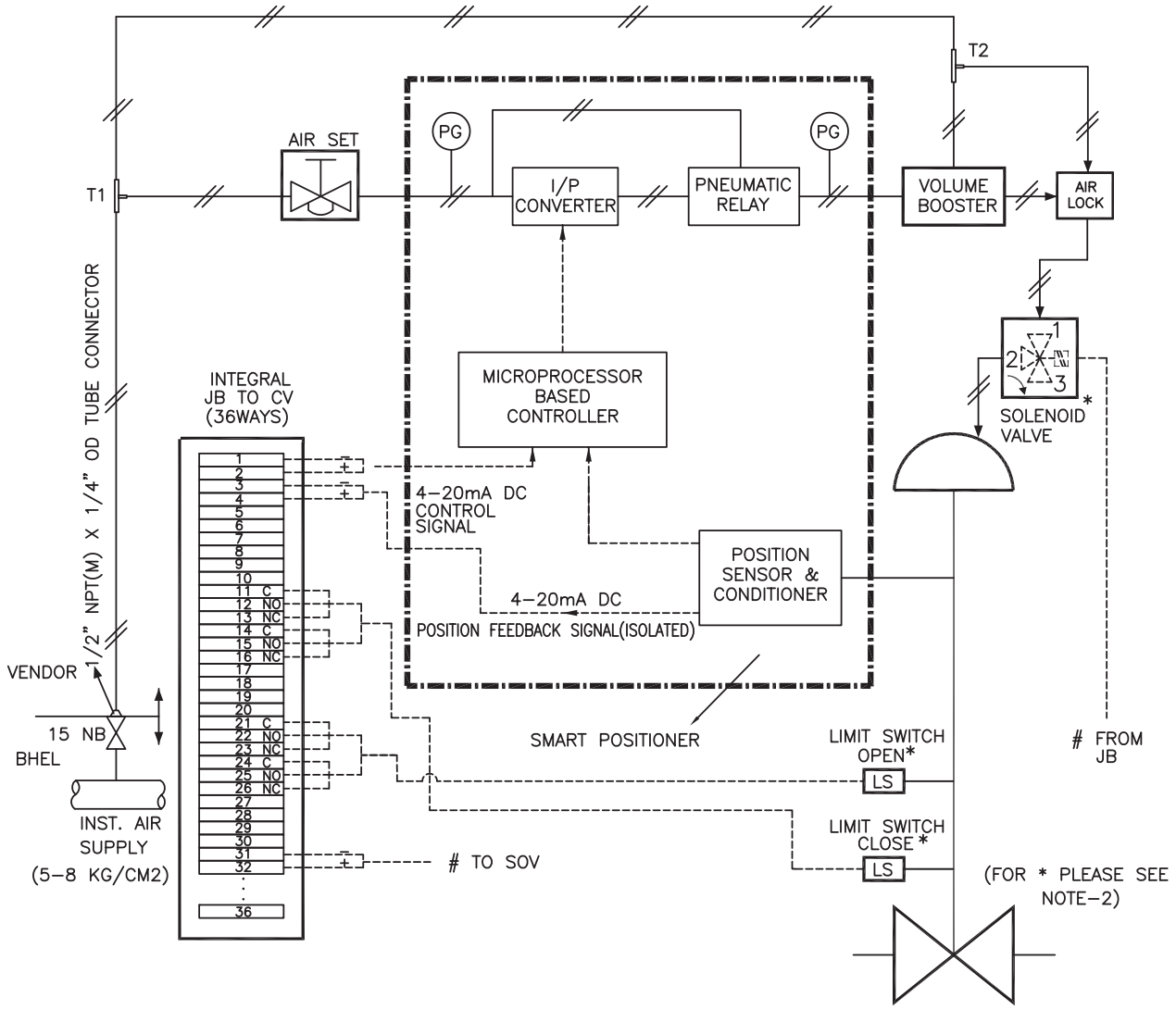

NOTES :-

1. POSITION OF EACH VALVE ON SUPPLY AIR FAILURE / ELECTRICAL SIGNAL FAILURE SHALL BE AS PER SPECIFICATION / DATA SHEET.
2. SOLENOID VALVE & LIMIT SWITCHES WILL BE PROVIDED ONLY FOR CONTROL VALVES IF INDICATED IN RESPECTIVE DATA SHEETS.
3. SOLENOID VALVES PORTS CONDITION:
   PORT 1 AND 2 SHALL BE CONNECTED UNDER DE-ENERGISED CONDITION.
   PORT 2 AND 3 SHALL BE CONNECTED UNDER ENERGISED CONDITION.
4. PRESSURE GAUGES REQUIRED FOR AIR SUPPLY & OUTPUT(S).
5. MOUNTING ACCESSORIES AS REQUIRED.
6. POSITION FEEDBACK SIGNAL SHALL BE 2 WIRE 4-20mA ISOLATED SIGNAL.
7. JB TERMINALS SHALL BE CAGE CLAMP TYPE SUITABLE FOR 2.5 SQ. MM COPPER WIRE. EXTERNAL CONNECTION, OF PLUG IN TYPE OR THROUGH CABLE GLAND, SHALL BE AS PER DATA SHEET
8. ALL APPLICABLE ACCESSORIES SHALL BE PROVIDED AS INDICATED IN THE INDIVIDUAL CONTROL VALVE DATA SHEET / ACCESSORIES DATA SHEET.
9. 12 METERS I/4" SS TUBING (AS PER ACCESSORIES DATA SHEET) & 1 SET OF FITTINGS TO BE SUPPLIED FOR EACH CONTROL VALVE FOR CONNECTION TO ISO VLV AT INST AIR HEADER ON ONE END AND TO AIR LOCK RELAY/AIR FILTER REGULATOR ON THE OTHER END. ALL THE BRASS / SS FITTINGS SHALL BE DOUBLE COMPRESSION TYPE.
10. VOLUME BOOSTER (ALONG WITH TEE-T2 AND RELATED TUBING & CONNECTORS) SHALL BE PROVIDED IF REQUIRED. AIR CONNECTION TO VOLUME BOOSTER FROM TEE-T2 SHALL BE PROVIDED.

BHEL		DRG. No.	PES-145-06B
	TITLE:- CONTROL VALVE HOOK-UP DIAGRAM		

CONTROL VALVE HOOK-UP DIAGRAM
(FOR ON / OFF TYPE)

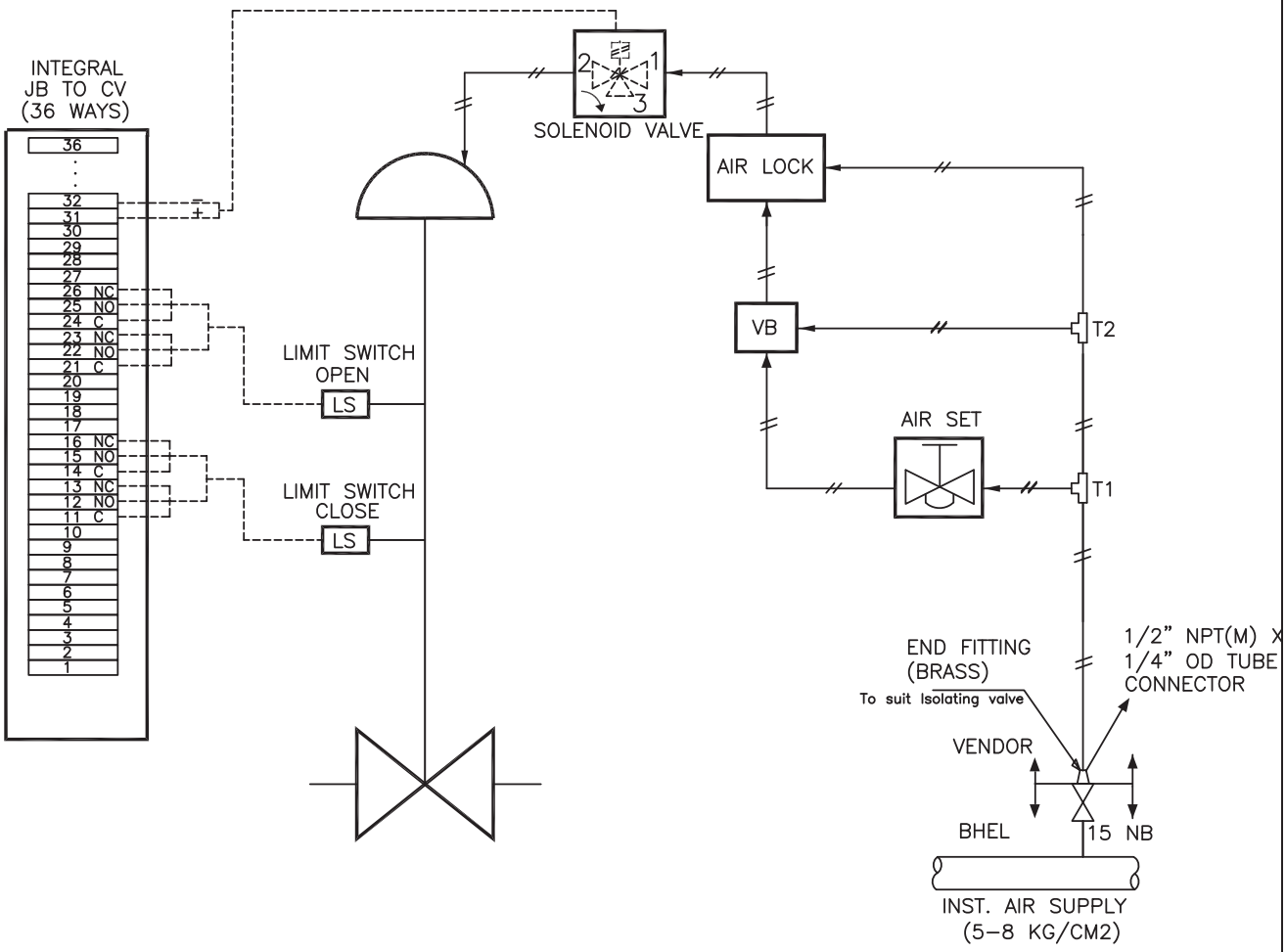

NOTES :–

1. POSITION OF EACH VALVE ON SUPPLY AIR FAILURE / ELECTRIC SIGNAL FAILURE SHALL BE AS PER SPECIFICATION / DATA SHEET.
2. SOLENOID VALVES PORTS CONDITION:
   PORT 1 AND 2 SHALL BE CONNECTED UNDER DE–ENERGISED CONDITION.
   PORT 2 AND 3 SHALL BE CONNECTED UNDER ENERGISED CONDITION.
3. MOUNTING ACCESSORIES AS REQUIRED.
4. JB TERMINALS SHALL BE CAGE CLAMP TYPE SUITABLE FOR 2.5 SQ. MM COPPER WIRE. EXTERNAL CONNECTION, OF PLUG IN TYPE OR THROUGH CABLE GLAND, SHALL BE AS PER DATA SHEET.
5. ALL APPLICABLE ACCESSORIES SHALL BE PROVIDED AS INDICATED IN THE INDIVIDUAL CONTROL VALVE DATA SHEET / ACCESSORIES DATA SHEET.
6. 12 METERS 1/4" SS TUBING (AS PER ACCESSORIES DATA SHEET) & 1 SET OF FITTINGS TO BE SUPPLIED FOR EACH CONTROL VALVE FOR CONNECTION TO ISO VLV AT INST AIR HEADER ON ONE END AND TO AIR LOCK RELAY/AIR FILTER REGULATOR ON THE OTHER END. ALL THE BRASS / SS FITTINGS SHALL BE DOUBLE COMPRESSION TYPE.

BHEL		DRG. No.	PES–145–06B
	TITLE:– CONTROL VALVE HOOK–UP DIAGRAM		

CONTROL VALVE HOOK-UP DIAGRAM
(DOUBLE ACTING PISTON ACTUATOR WITH SMART POSITIONER)

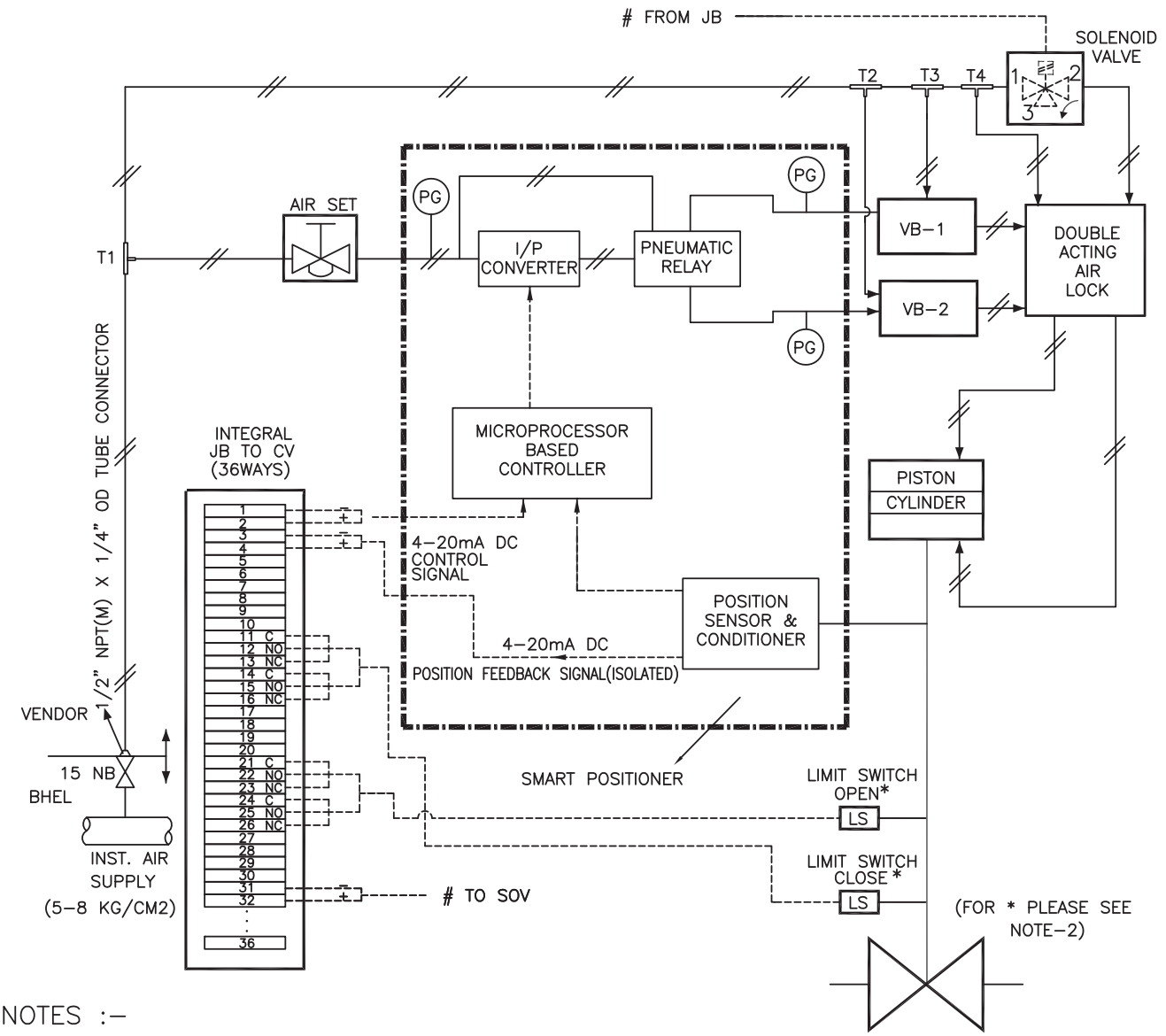

NOTES :–

1. POSITION OF EACH VALVE ON SUPPLY AIR FAILURE / ELECTRICAL SIGNAL FAILURE SHALL BE AS PER SPECIFICATION / DATA SHEET. AIR LOCK SHALL BE PROVIDED ACCORDINGLY.
2. SOLENOID VALVE & LIMIT SWITCHES WILL BE PROVIDED ONLY FOR CONTROL VALVES IF INDICATED IN RESPECTIVE DATA SHEETS.
3. SOLENOID VALVES PORTS CONDITION:
   PORT 1 AND 2 SHALL BE CONNECTED UNDER DE–ENERGISED CONDITION.
   PORT 2 AND 3 SHALL BE CONNECTED UNDER ENERGISED CONDITION.
4. PRESSURE GAUGES REQUIRED FOR AIR SUPPLY & OUTPUT(S).
5. MOUNTING ACCESSORIES AS REQUIRED.
6. POSITION FEEDBACK SIGNAL SHALL BE 2 WIRE 4–20mA ISOLATED SIGNAL.
7. JB TERMINALS SHALL BE CAGE CLAMP TYPE SUITABLE FOR 2.5 SQ. MM COPPER WIRE. EXTERNAL CONNECTION, OF PLUG IN TYPE OR THROUGH CABLE GLAND, SHALL BE AS PER DATA SHEET
8. ALL APPLICABLE ACCESSORIES SHALL BE PROVIDED AS INDICATED IN THE INDIVIDUAL CONTROL VALVE DATA SHEET / ACCESSORIES DATA SHEET.
9. 12 METERS 1/4" SS TUBING (AS PER ACCESSORIES DATA SHEET) & 1 SET OF FITTINGS TO BE SUPPLIED FOR EACH CONTROL VALVE FOR CONNECTION TO ISO VLV AT INST AIR HEADER ON ONE END AND TO AIR LOCK RELAY/AIR FILTER REGULATOR ON THE OTHER END. ALL THE BRASS / SS FITTINGS SHALL BE DOUBLE COMPRESSION TYPE.
10. VOLUME BOOSTER (ALONG WITH TEE–T2 AND RELATED TUBING & CONNECTORS) SHALL BE PROVIDED IF REQUIRED. AIR CONNECTION TO VOLUME BOOSTER FROM TEE–T2 & TEE–T3 SHALL BE PROVIDED.

BHEL		DRG. No.	PES–145–06B
	TITLE:– CONTROL VALVE HOOK–UP DIAGRAM		

SECTION – D

GUIDELINES FOR PACKING (PES-145-06C)

Guidelines for Packing

- ✓ After inspection of control valves assembly. Smart Positioner along with Pressure Gauge shall be disassembled & packed separately.
- ✓ Threaded connection of Smart Positioner & Pressure Gauge shall be shipped with the end caps fitted to avoid any damage.
- ✓ Instructions with sketch for mounting the Smart Positioner & Pressure Gauge shall be sent along with the aforesaid accessories.
- ✓ Packing of the control valves and Smart Positioner along with Pressure Gauge shall be done in separate wooden boxes/cases in order to avoid damage during transit and also during storage at site in tropical climatic conditions for a period of 18-24 months.
- ✓ All valves & smart positioner along with pressure gauges shall be packed properly with quality wooden planks with proper wooden frame support. Moreover the valves are internally covered with polythene sheets to protect from the water and moisture entry.
- ✓ Stronger shock absorbing cover material like expanded Polyurethane which can take any direct impact on it shall be used for packing
- ✓ Proper reaper support to be provided in the packing and Valve assembly to be aligned properly to avoid the damage of accessories during transit due to vibration effect.
- ✓ Marking for Fragile & Condensing environment shall be done on the packing box.

The Following Details are to be marked on the Packing Cases

- ✓ Address of consignee
- ✓ Purchase order no.
- ✓ Description of items or title of packing list
- ✓ Weight
- ✓ Dimension of the Box
- ✓ Marking showing upright position
- ✓ Marking showing sling position
- ✓ Marking showing umbrella
  (i.e. for machines/components to be stored under covered storage)

SECTION-D

SUB-VENDOR LIST

SUB VENDOR LIST

(FOR ACCESSORIES)

Sl. No.	ITEM DESCRIPTION	SUB-VENDORS
1.	SMART POSITIONER	ABB MASOLENIEN SIEMENS SAMR YOKOGAWA EMERSON(FISHER ROSEMOUNT) METSO
2.	AIR FILTER REGULATOR	FAIR CHILD,USA SHAVO NORGEN,MUMBAI SMC PNEUMATICS ,NOIDA EMERSON(ASCO) CHENNAI FESTO,BANGALORE PLAKA,CHENNAI
3.	SOLENOID VALVE	ROTEX,VARODARA AVCON MUMBAI HERION,GERMANY IMI NORGEN,GERMANY JAFFERSON,ARGENTNA ASCO, CHENNAI/USA FESTO,BANGALORE SMC PNEUMATICS ,NOIDA
4.	JUNCTION BOX	SUMIP COMPOSITES ,AHEMDABAD KEMROK VARODARA AJMERA,MUMBAI TRINITY TOUCH,PALWAL

PACKAGE WISE REGISTERED SUPPLIER LIST (PERMANENT CATEGORY) AS ON 12/26/2016 2:31:39 PM

Sl No	Package Code	Package Name	Supplier Name	Supplier Communication Address	Supplier Works Address
285	145-25000-A	JUNCTION BOX	Shrenik & Company,	Mr. Mitesh Shah/Mr. Pulin Shah 39 A/3 ,Panchratna Industrial Estate, Sarkhej-Bavla Road Ahmedabad Phone- 9825024921 Pincode : 382213 Email : sales@pustron.com, pulin@sumip.com	Works-1->Mr.Pulin Shah/ Mr. Kaloesh Parmar 39 A/3 ,Panchratna Industrial Est,Sarkhej-Bavla Road, Changodhar -Ahmedabad-GUJARAT INDIA Phone- 98250 80339 1 FAX : 079-26932424 Pincode : 382213 Email : sales@sumip.com
286	145-25000-A	JUNCTION BOX	K.S.INSTRUMENTS PVT.LTD.	S Raghavan No. 72, 3rd Main, 1st Stage Industrial Suburb, Yeshwanthpur Bangalore Phone- 9880385770 Pincode : 560022 Email : sales1@ksinstruments.net	
287	145-25000-A	JUNCTION BOX	SUCHITRA INDUSTRIES	NO-2,OPP-27 AECS LAYOUT 2ND STG REJAMAHALVILAS EXTN 2ND STG BANGALORE Phone- Pincode : Email : suchitra.industriesblr@gmail.com	Works-1->B. Srinivas Suchitra Industries, Opp No 53, Muneshwara Black Devinagar, Lottagal hal -BANGALORE-KARNATAKA INDIA Phone- 080-23511247 FAX : Pincode : 560094 Email : suchitra_industries@yahoo.com
288	145-25000-A	JUNCTION BOX	AJMERA INDUSTRIAL & ENGINEERING WORKS	JIGNESH MAHENDRA AJMERA DENA BANK BLDG.,SHREE NAGESH INDL. ESTATE,STATION ROAD, MUMBAI Phone- 022 67973578 Pincode : 400 088 Email : ajmera@ajmera.net, jmajmera@yahoo.com	Works-1->JIGNESH MAHENDRA AJMERA DENA BANK BLDG., SHREE NAGESHINDL. ESTATE,STATION ROAD, -MUMBAI-MAHARASHTRA INDIA Phone- 022 67973578 FAX : Pincode : 400 088 Email : ajmera@ajmera.net