		BHARAT HEAVY ELECTRICALS LIMITED **HEAVY POWER EQUIPMENT PLANT** **PURCHASE DEPARTMENT/PUMPS** **RAMACHANDRAPURAM, HYDERABAD**				**Project: RATE CONTRACT FOR VARIOUS PROJECTS**		**Enquiry:F6/RC/24-26/CVPFW/1**
Sl.No	Material Code	Material Description	BHEL Drawing/ Spec. - Var.	Quantity	MU	Required Delivery Date	Delivery Period Quoted by Vendor (Number of days from the date of BHEL PO)	Delivery Place
1	FP9750702018	SUCTION FORMWORK FOR CV PUMP	FP50702-1	19.000	EA	90 DAYS FROM THE DATE OF BHEL PO		EX WORKS
2	FP9750702026	DISCHARGE FORMWORK FOR CV PUMP	FP50702-2	19.000	EA	90 DAYS FROM THE DATE OF BHEL PO		EX WORKS

Note:

1-Above enquiry and quantity is to finalise the Rate Contract of CVP FORM WORKS for next two years.Rate contract will be valid 2 years from the date of issue of Rate contract .

2-Validity period of rate contract is based on the date of issue of BHEL PO within rate contract period. Delivery may be after the rate contract period.

3-Item shall be supplied as per BHEL Specification.

4-Vendor to provide the documents as per BHEL PQR/Technical specification. In case documents provided by suppliers are not meeting BHEL requirement, offer of such vendors will be rejected.

5-BHEL shall be resorting to Reverse Auction (RA) (Guidelines as available on www.bhel.com) for this tender. RA shall be conducted among the techno-commercially qualified bidders.Price bids of all techno-commercially qualified bidders shall be opened and same shall be considered for RA. In case any bidder(s) do(es) not participate in online Reverse Auction, their sealed envelope price bid along with applicable loading, if any, shall be considered for ranking.

6- Delivery period is 90 days from the date of BHEL PO. Delivery term is Ex-works. After finalisation of rate contract,BHEL will place the PO as per site requirement, vendor need to make ready the item for dispatch within 90 days from the date of PO. Any delay will be calculated as per Annexure-I

7-The evaluation of the tender shall be on the basis of lowest of " Total cost to BHEL ".

8-BHEL ITB 13 is applicable for the enquiry.

9-PVC clause is applicable for the tender.

10-Any other terms and conditions mentioned in the bid will not be considered and only the filled in ITB will be considered for evaluation.

COPYRIGHT AND CONFIDENTIAL
The information on this document is the property of BHARAT HEAVY ELECTRICALS LIMITED,
It must not be used directly or indirectly in any way detrimental to the interest of the company.

SUCTION AND DISCHARGE FORMWORK FOR CONCRETE VOLUTE PUMP

1.0 SCOPE :

This standard specifies the technical requirements of formwork required for Concrete volute pump with regard to the following.

- Supply of suction wooden formwork (pattern)
- Supply of discharge wooden formwork (pattern)
- Supervision services for erection of above formwork at site.

2.0 MATERIALS OF CONSTRUCTION :

2.1 The skin of formwork shall be made of marine grade plywood (IS:710) of at least 16mm thickness for top and side faces and 10mm thickness for the bottom face.

2.2 The runner members of the formwork supporting the skin shall be made of un-deformed solid wood.

2.3 Moisture content in the wooden members should be appropriate such that excessive contraction or expansion of the members, resulting in dimensional changes of formwork do not occur due to weather changes.

2.4 The wooden members shall be treated for pest control.

3.0 TECHNICAL REQUIREMENTS :

3.1 The dimensions of suction and discharge formwork shall be as per the neatlines drawing indicated in the variant table.

3.2 The formwork surface shall be smooth and should not contain undulations. In producing a concrete suction (draft tube) & discharge (volute) passage, the surface finish required from the use of suitable formwork, should be equivalent of a first class finish on cast iron casting. The permissible surface inequalities on water passage surface should not be greater than 0.1” over a minimum length of 3”. Refer figures 1 & 2.

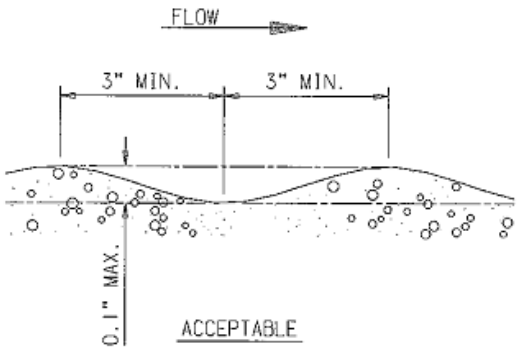

Fig.1, Acceptable condition of inequalities on water passage concrete surface

COPYRIGHT AND CONFIDENTIAL
The information on this document is the property of BHARAT HEAVY ELECTRICALS LIMITED.
It must not be used directly or indirectly in any way detrimental to the interest of the company.

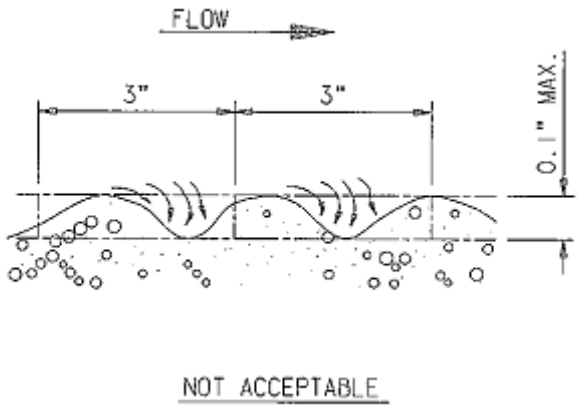

Fig.2, Unacceptable condition of inequalities on water passage concrete surface

3.3 The formwork assembly shall be structurally stable and should not deflect excessively either during or after concrete casting at site. The loads arising from reinforcement steel, embedments, concrete and its casting, and permissible inequalities for water passage surface mentioned in cl.3.2, shall be considered while designing the formwork's internal frame and external support members including their spacing.

3.4 The supply of nails, nuts and bolts required for formwork assembly shall be in scope of vendor.

3.5 The vendor shall also supply temporary struts required for supporting formwork at the time concreting.

3.6 Grouting holes shall be provided in formwork as per drawing.

3.7 The surface of formwork which would form the water passage path shall be painted with 2 coats of enamel paint after appropriate primer application.

3.8 There shall not be any gaps in joints of formwork to prevent leakage of concrete.

4.0 TECHNICAL DATA :

4.1 BHEL DRAWINGS TO BE PROVIDED AFTER AWARD OF WORK:

- Neatlines of suction formwork
- Neatlines of discharge formwork
- GA drawing CV-CW pump
- Sectional Assembly drawing of CV-CWP
- Discharge pipe outline and foundation drawing
- Discharge lip outline drawing

COPYRIGHT AND CONFIDENTIAL
The information on this document is the property of BHARAT HEAVY ELECTRICALS LIMITED.
It must not be used directly or indirectly in any way detrimental to the interest of the company.

- Suction embedded part & Pump sole plate drawing
- Procedure for installation of various embedded parts & concrete casting of CVP casing.
- RCC drawings of CVP concrete casing.
- Field Quality plan.

4.2 DRAWINGS/DOCUMENTS TO BE SUBMITTED BY VENDOR FOR APPROVAL:

- Suction channel drawing within 10 days of placing PO
- Discharge channel drawing within 20 days of placing PO
- Internal quality plan
- Schedule for erection of suction and discharge formwork at site
- Installation procedure at site
- Guidelines for storage of formwork at site stores
- Guidelines for pouring concrete on formwork

5.0 INSPECTION AT VENDOR WORKS :

5.1 100% of Suction & Discharge formwork assemblies shall be offered for BHEL inspection at vendor works.

5.2 The dimensions and tolerances shall be as per approved drawing, which shall be measured by calibrated tape arranged by the vendor.

5.3 Templates shall be prepared by vendor for checking radii and curvatures.

5.4 The center lines of pump shall be marked on suction and discharge formwork. Centerline of discharge shall also be marked on discharge formwork.

5.5 Match marks with numbers shall be made with paint at parting planes of formwork sub-assemblies.

6.0 PACKING AND TRANSPORTATION :

6.1 After successful inspection at shop, the formwork assembly shall be dismantled for packing and transportation. All the sub-assemblies shall be numbered for easy identification.

6.2 The dismantled formwork shall be packed in suitable wooden boxes after being wrapped thoroughly with polythene sheet. The wooden boxes used for packing shall be in line with Sketch-1. Care shall be taken that there is no ingress of rainwater or moisture into the packed box. Adequate desiccant shall be filled in the boxes.

COPYRIGHT AND CONFIDENTIAL
The information on this document is the property of BHARAT HEAVY ELECTRICALS LIMITED.
It must not be used directly or indirectly in any way detrimental to the interest of the company.

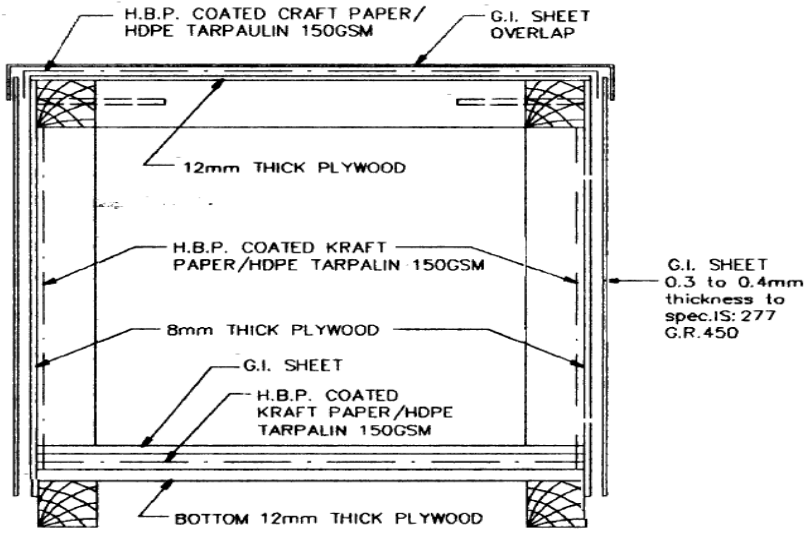

CLOSED PACKING CASE WITH
G.I.SHEET SHOWING LAYERS
OF PACKING MATERIALS

SKETCH–I

6.3 The packing shall be done in such a way that there is no damage to the formwork while loading, unloading using wire rope sling and transportation.

6.4 The maximum dimensions of width, height and length of the packing box shall be 7', 7' and 12' respectively.

6.5 The packing box shall be designed and manufactured to take the loads arising from weight of formwork, loading and unloading.

7.0 SUPERVISION FOR ERECTION AT SITE :

The following is the scope of supervision by the formwork vendor.

a. Assembly of formwork for suction channel for all CV pumps.
b. Assembly of formwork for discharge channel for all CV pumps.
c. The vendor shall make sure that formwork is assembled in correct position and locked properly such that the formwork is not displaced while concreting.
d. The vendor shall also make sure that suitable extra supports/struts are provided to formwork to ensure that there is no deformation due to concrete loading.
e. Supervisor shall also be deputed at the time of relevant concrete casting stages to monitor formwork integrity.
f. Dis-assembly of formwork for suction channel after concreting.
g. Dis-assembly of formwork for discharge channel after concreting.

COPYRIGHT AND CONFIDENTIAL
The information on this document is the property of BHARAT HEAVY ELECTRICALS LIMITED.
It must not be used directly or indirectly in any way detrimental to the interest of the company.

8.0 INSPECTION AT SITE :

8.1 The dimensions of formwork assemblies are once again measured by vendor's supervisor in the presence BHEL's representative and end customer's representative after erection at site, and shall confirm by the formwork drawing.

8.2 The alignment, elevations, centerlines and spacing of formwork assemblies shall also be checked after formwork's locking as per the CV pump layout drawing and field quality plan.

8.3 Vendor's supervisor shall perform final inspection of formwork dimensions and position after placing of reinforcement and steel embedment, before concrete casting. However, this final inspection may be waived off with the concurrence of end customer.

9.0 GUARANTEE :

Vendor shall be responsible for any incident caused by formwork's material defects effecting the concrete casting and surface finish of concrete, and shall repair or replace without additional charges.

10.0 VARIANT TABLE :

Var No.	Description	Project	Qty (set)	Neatlines drawing reference	Material Code
01	Suction formwork	TANGEDCO Udangudi TPS-I	6	31801495214	FP9750702018
02	Discharge formwork	TANGEDCO Udangudi TPS- I	6	31801495215	FP9750702026
03	Suction formwork for Bhusawal MKSV 220C	MAHAGENCO Bhusawal TPS- U#VI	2	31826510026	FP9750702034
04	Discharge formwork for Bhusawal MKSV 220C	MAHAGENCO Bhusawal TPS- U#VI	2	31826510027	FP9750702042

Note: The latest revision of neat lines drawing shall be applicable.

RECORD OF REVISIONS

Rev. No.	Date	Revision Details	Revised By	Approved By
01	01-03-2020	Added variants 03 & 04	MVSS	KHRK
02	18-03-2021	Added variants 05 & 06	MVSS	ASJK
02	02-04-2024	Packing details revised.	MVSS	ASJK

COPYRIGHT AND CONFIDENTIAL
The information on this document is the property of BHARAT HEAVY ELECTRICALS LIMITED,
It must not be used directly or indirectly in any way detrimental to the interest of the company.

BHARAT HEAVY ELECTRICALS LIMITED
RAMACHANDRAPURAM:: HYDERABAD-502032

PUMPS ENGINEERING DEPARTMENT

TECHNICAL PRE-QUALIFICATION REQUIREMENTS

PROCEDURE FOR EVALUATION OF OFFERS FOR OPEN TENDERS

The offers will be submitted as two part bid system i.e., Techno–commercial offer including PQR (Part-1) and price offer (Part-2).

Initially, only techno – commercial offer will be opened for scrutiny.

Offers will be evaluated as follows:

(A) Techno – commercial offer (Part-1):

1) The Pre-qualification requirements and credentials as per the table in Annexure-1 will be evaluated and only those offers passing this evaluation will be considered.
   (a) For the items, which are not listed in the customer approved vendor list, the offers passing the BHEL PQR evaluation only will be considered for Technical evaluation.
   (b) For the items, which are listed in the customer approved vendor list, the credentials of those vendors not figuring in the customer approved list will be further forwarded to our end customer for their approval. The offers of those vendors who will be approved by customer only will be considered for Technical evaluation.
2) Technical scrutiny of Offers: The offers meeting the PQR and technical requirements will only be considered for further processing.

(B) Price offer (Part -2) :

The price bids shall be opened of those vendors only who will be approved by BHEL/customer as per above.

(Jaisri Deogam)

अविनाश एस. जॉन कुजूर
Avinash S John Kujur
उप महाप्रबंधक /पम्पस अभियांत्रिकी
Dy. General Manager / Pumps Engineering
बी.एच.ई.एल. हैदराबाद, BHEL,HYD-32

Annexure-1

Sl. No.	REQUIREMENT	ACCEPTANCE	REMARKS
1.	Similar MS/CU Gasket supplied earlier	Supply of similar or bigger MS/CU Gasket supplied to at least two thermal power stations, and which are in satisfactory operation for a minimum period of one year each.	a) Reference List of supplies made so far. b) Un-priced PO copies of the two reference supplies. c) End-user certificates of the two reference stations.
2.	Manufacturing facilities	Vendor must have manufacturing facilities for similar type of MS/CU Gasket.	Detail list of Manufacture facility shall be furnished.
3.	Testing facilities	Vendor must have testing facilities to carry out tests as per Specification Or tie-up with a third party having experience in similar jobs	Test reports of earlier supplies to be furnished
4.	Quality Assurance facilities	Vendor must have quality assurance facilities / systems to check for conformance of its job work and bought-out items with BHEL specification and standards.	Quality documents of past procurements to be furnished. Calibration certificates of instruments to be furnished.
5.	Inspection agencies for earlier supplies	Lloyds / TUV / NTPC / BHEL / SGS / BHEL TPIA or any other International/ Indian inspection agency.	Copies of earlier inspection certificates to be furnished.
6.	Service after Sales & supply of spare parts	Availability of service center and technical experts to meet the after sales service requirements for the supplied equipment at project sites.	Details of the service centers and technical expertise to be furnished.

NOTE: The Suppliers not meeting the above criteria OR not submitted the above required documents will be disqualified.

(Taisin Devgam)

अविनाश एस. जॉन कुजूर
Avinash S John Kujur
उप महाप्रबंधक /पम्पस अभियांत्रिकी
Dy. General Manager / Pumps Engineering
बी.एच.ई.एल. हैदराबाद, BHEL,HYD-32

Clause on IP in the tender

Integrity Pact (IP)

(a) IP is a tool to ensure that activities and transactions between the Company and its Bidders/ Contractors are handled in a fair, transparent and corruption free manner. Following Independent External Monitors (IEMs) on the present panel have been appointed by BHEL with the approval of CVC to oversee implementation of IP in BHEL.

Sl	IEM	Email
1.	Shri Otem Dai, IAS (Retd.)	iem1@bhel.in
2.	Shri Bishwamitra Pandey, IRAS (Retd.)	iem2@bhel.in
3.	Shri Mukesh Mittal, IRS (Retd.)	iem3@bhel.in

(b) The IP as enclosed with the tender is to be submitted (duly signed by authorized signatory) along with techno-commercial bid (Part-I, in case of two/ three part bid). Only those bidders who have entered into such an IP with BHEL would be competent to participate in the bidding. In other words, entering into this Pact would be a preliminary qualification.

(c) Please refer Section-8 of IP for Role and Responsibilities of IEMs. In case of any complaint arising out of the tendering process, the matter may be referred to any of the above IEM(s). All correspondence with the IEMs shall be done through email only.

Note:

No routine correspondence shall be addressed to the IEM (phone/ post/ email) regarding the clarifications, time extensions or any other administrative queries, etc on the tender issued. All such clarification/ issues shall be addressed directly to the tender issuing (procurement) department's officials whose contact details are provided below:

Details of contact person(s):

(1)
Name: K TULASI PRIYA
Deptt: PURCHASE PUMPS
Address: BHEL HYDERABAD
Phone: (Landline/ Mobile):
040-2318-3750
Email: tulsikoneti@bhel.in
Fax: _____

(2)
Name:Nandagopal
Deptt: PURCHASE PUMPS
Address: BHEL HYDERABAD
Phone: (Landline/ Mobile)
9483944073
Email:nandgopal@bhel.in
Fax: _____

INTEGRITY PACT

Between

Bharat Heavy Electricals Ltd. (BHEL), a company registered under the Companies Act 1956 and having its registered office at "BHEL House", Siri Fort, New Delhi – 110049 (India) hereinafter referred to as "The Principal", which expression unless repugnant to the context or meaning hereof shall include its successors or assigns of the ONE PART

and

_____, (description of the party along with address), hereinafter referred to as "The Bidder/ Contractor" which expression unless repugnant to the context or meaning hereof shall include its successors or assigns of the OTHER PART

Preamble

The Principal intends to award, under laid-down organizational procedures, contract/s for _____ _____ _____. The Principal values full compliance with all relevant laws of the land, rules and regulations, and the principles of economic use of resources, and of fairness and transparency in its relations with its Bidder(s)/ Contractor(s).

In order to achieve these goals, the Principal will appoint Independent External Monitor(s), who will monitor the tender process and the execution of the contract for compliance with the principles mentioned above.

Section 1 – Commitments of the Principal

1.1 The Principal commits itself to take all measures necessary to prevent corruption and to observe the following principles:-

1.1.1 No employee of the Principal, personally or through family members, will in connection with the tender for, or the execution of a contract, demand, take a promise for or accept, for self or third person, any material or immaterial benefit which the person is not legally entitled to.

1.1.2 The Principal will, during the tender process treat all Bidder(s) with equity and reason. The Principal will in particular, before and during the tender process, provide to all Bidder(s) the same information and will not provide to any Bidder(s) confidential / additional information through which the Bidder(s) could obtain an advantage in relation to the tender process or the contract execution.

1.1.3 The Principal will exclude from the process all known prejudiced persons.

1.2 If the Principal obtains information on the conduct of any of its employees which is a penal offence under the Indian Penal Code 1860 and Prevention of Corruption Act 1988 or any other statutory penal enactment, or if there be a substantive suspicion in this regard, the Principal will inform its Vigilance Office and in addition can initiate disciplinary actions.

Section 2 – Commitments of the Bidder(s)/ Contractor(s)

2.1 The Bidder(s)/ Contractor(s) commit himself to take all measures necessary to prevent corruption. He commits himself to observe the following principles during his participation in the tender process and during the contract execution.

2.1.1 The Bidder(s)/ Contractor(s) will not, directly or through any other person or firm, offer, promise or give to the Principal or to any of the Principal's employees involved

in the tender process or the execution of the contract or to any third person any material, immaterial or any other benefit which he / she is not legally entitled to, in order to obtain in exchange any advantage of any kind whatsoever during the tender process or during the execution of the contract.

2.1.2 The Bidder(s)/ Contractor(s) will not enter with other Bidder(s) into any illegal or undisclosed agreement or understanding, whether formal or informal. This applies in particular to prices, specifications, certifications, subsidiary contracts, submission or non-submission of bids or any other actions to restrict competitiveness or to introduce cartelization in the bidding process.

2.1.3 The Bidder(s)/ Contractor(s) will not commit any penal offence under the relevant IPC/ PC Act; further the Bidder(s)/ Contractor(s) will not use improperly, for purposes of competition or personal gain, or pass on to others, any information or document provided by the Principal as part of the business relationship, regarding plans, technical proposals and business details, including information contained or transmitted electronically.

2.1.4 The Bidder(s)/ Contractor(s) will, when presenting his bid, disclose any and all payments he has made, and is committed to or intends to make to agents, brokers or any other intermediaries in connection with the award of the contract.

2.2 The Bidder(s)/ Contractor(s) will not instigate third persons to commit offences outlined above or be an accessory to such offences.

Section 3 – Disqualification from tender process and exclusion from future contracts

If the Bidder(s)/ Contractor(s), before award or during execution has committed a transgression through a violation of Section 2 above, or acts in any other manner such as to put his reliability or credibility in question, the Principal is entitled to disqualify the Bidder(s)/ Contractor(s) from the tender process or take action as per the separate "Guidelines on Banning of Business dealings with Suppliers/ Contractors". framed by the Principal.

Section 4 – Compensation for Damages

4.1 If the Principal has disqualified the Bidder from the tender process prior to the award according to Section 3, the Principal is entitled to demand and recover the damages equivalent Earnest Money Deposit/Bid Security.

4.2 If the Principal has terminated the contract according to Section 3, or if the Principal is entitled to terminate the contract according to section 3, the Principal shall be entitled to demand and recover from the Contractor liquidated damages equivalent to 5% of the contract value or the amount equivalent to Security Deposit/Performance Bank Guarantee, whichever is higher.

Section 5 – Previous Transgression

5.1 The Bidder declares that no previous transgressions occurred in the last 3 years with any other company in any country conforming to the anti-corruption approach or with any other Public Sector Enterprise in India that could justify his exclusion from the tender process.

5.2 If the Bidder makes incorrect statement on this subject, he can be disqualified from the tender process or the contract, if already awarded, can be terminated for such reason.

Section 6 – Equal treatment of all Bidders/ Contractors/ Sub-contractors

6.1 The Bidder(s)/ Contractor(s) undertake(s) to obtain from all subcontractors a commitment consistent with this Integrity Pact and report Compliance to the Principal. This commitment shall be taken only from those sub-contractors whose contract value is more than 20 % of Bidder's/ Contractor's contract value with the Principal. The Bidder(s)/ Contractor(s) shall continue to remain responsible for any default by his Sub-contractor(s).

6.2 The Principal will enter into agreements with identical conditions as this one with all Bidders and Contractors.

6.3 The Principal will disqualify from the tender process all bidders who do not sign this pact or violate its provisions.

Section 7 – Criminal Charges against violating Bidders/ Contractors /Sub-contractors

If the Principal obtains knowledge of conduct of a Bidder, Contractor or Subcontractor, or of an employee or a representative or an associate of a Bidder, Contractor or Subcontractor which constitutes corruption, or if the Principal has substantive suspicion in this regard, the Principal will inform the Vigilance Office.

Section 8 –Independent External Monitor(s)

8.1 The Principal appoints competent and credible Independent External Monitor for this Pact. The task of the Monitor is to review independently and objectively, whether and to what extent the parties comply with the obligations under this agreement.

8.2 The Monitor is not subject to instructions by the representatives of the parties and performs his functions neutrally and independently. He reports to the CMD, BHEL.

8.3 The Bidder(s)/ Contractor(s) accepts that the Monitor has the right to access without restriction to all contract documentation of the Principal including that provided by the Bidder(s)/ Contractor(s). The Bidder(s)/ Contractor(s) will grant the monitor, upon his request and demonstration of a valid interest, unrestricted and unconditional access to his contract documentation. The same is applicable to Sub-contractor(s). The Monitor is under contractual obligation to treat the information and documents of the Bidder(s)/ Contractor(s) / Sub-contractor(s) with confidentiality.

8.4 The Principal will provide to the Monitor sufficient information about all meetings among the parties related to the contract provided such meetings could have an impact on the contractual relations between the Principal and the Contractor. The parties offer to the Monitor the option to participate in such meetings.

8.5 As soon as the Monitor notices, or believes to notice, a violation of this agreement, he will so inform the Management of the Principal and request the Management to discontinue or take corrective action, or heal the situation, or to take other relevant action. The Monitor can in this regard submit non-binding recommendations. Beyond this, the Monitor has no right to demand from the parties that they act in a specific manner, refrain from action or tolerate action.

8.6 The Monitor will submit a written report to the CMD, BHEL within 8 to 10 weeks from the date of reference or intimation to him by the Principal and, should the occasion arise, submit proposals for correcting problematic situations.

8.7 The CMD, BHEL shall decide the compensation to be paid to the Monitor and its terms and conditions.

8.8 If the Monitor has reported to the CMD, BHEL, a substantiated suspicion of an offence under relevant IPC / PC Act, and the CMD, BHEL has not, within reasonable time, taken visible action to proceed against such offence or reported it to the Vigilance Office, the

Monitor may also transmit this information directly to the Central Vigilance Commissioner, Government of India.

8.9 The number of Independent External Monitor(s) shall be decided by the CMD, BHEL.

8.10 The word 'Monitor' would include both singular and plural.

Section 9 – Pact Duration

9.1 This Pact begins and shall be binding on and from the submission of bid(s) by bidder(s). It expires for the Contractor 12 months after the last payment under the respective contract and for all other Bidders 6 months after the contract has been awarded.

9.2 If any claim is made / lodged during this time, the same shall be binding and continue to be valid despite the lapse of this pact as specified as above, unless it is discharged/ determined by the CMD, BHEL.

Section 10 – Other Provisions

10.1 This agreement is subject to Indian Laws and jurisdiction shall be registered office of the Principal, i.e. New Delhi.

10.2 Changes and supplements as well as termination notices need to be made in writing. Side agreements have not been made.

10.3 If the Contractor is a partnership or a consortium, this agreement must be signed by all partners or consortium members.

10.4 Should one or several provisions of this agreement turn out to be invalid, the remainder of this agreement remains valid. In this case, the parties will strive to come to an agreement to their original intentions.

10.5 Only those bidders/ contractors who have entered into this agreement with the Principal would be competent to participate in the bidding. In other words, entering into this agreement would be a preliminary qualification.

Nandgopal

---------- ----------

నంద గోపాల్ · नंद गोपाल
NANDGOPAL
वरिष्ठ प्रबंधक / क्रय पंप
Sr. Manager / Purchase Pumps
बी.एच.ई.एल.-एच.ई.पी., हैदराबाद-32, BHEL-HPEP, HYD-32.

For & On behalf of the Principal

(Office Seal)

For & On behalf of the Bidder/ Contractor

(Office Seal)

Place----Hyderabad

Date----------

Witness: Narendra Kumar

(Name & Address) _____

BHEL Hyderabad.

Witness: _____

(Name & Address) _____

(To be executed on Non- Judicial Stamp Paper for an appropriate value.
To be stamped as an agreement)

(For Suppliers on Unit's / Division's PMD)

ANNEXURE-II

Framework Confidentiality Agreement Cum Undertaking

This Agreement made on this the _____ day of (month) _____ 20 ___ ("Effective Date") by and between M/s. BHARAT HEAVY ELECTRICALS LIMITED, having registered office at "BHEL House", Siri Fort, New Delhi – 110049 (India), acting through its _____ Unit (hereinafter may be referred to as "BHEL" or "the company").

And

M/s. _____ (address) _____ represented by authorized representative Sri _____ (herein after referred to as the "Supplier").

The supplier and the company may, unless the context otherwise requires, hereinafter be collectively referred to as "Parties" or singly as the "Party".

RECITALS

Whereas, BHEL is engaged in the design, engineering, manufacturing, construction, testing, commissioning and servicing of a wide range of products, systems and services for the core sectors of the economy, viz. Power, Transmission, Industry, Transportation, Renewable energy, Oil & Gas and Defence and providing associated services to varied customers in relation to which BHEL / its affiliates own valuable information of a secret and confidential nature.
Whereas the Company may, in connection with contract(s) (as defined hereunder) placed or to be placed upon the supplier, or otherwise, from time to time, make available, Technical Information as is defined hereunder.

And Whereas BHEL is willing to provide such Technical Information to the Supplier from time to time and the Supplier understands and acknowledges that such Technical Information is valuable for the Company and as such is willing to protect confidentiality of such information, subject to the terms and conditions set out hereunder.

Now therefore, in view of the foregoing premises and in consideration of the mutual covenants and agreements hereinafter set forth, the parties agree as under:

1. Definitions:

Unless the context so requires, in this Agreement, the following terms will bear the meaning ascribed to the said term in this clause.

A. **"Contract"** means the contract entered into with a supplier and includes a Purchase Order, or a Work Order for procurement of any goods or for provision of any services.
B. **"Effective Date"** means the date of this Agreement as mentioned in the preamble of this Agreement.
C. **"Supplier"** includes a Contractor or a Vendor of the Company whether for supplying of goods or for providing any services under a Contract or both.
D. **"Technical Information"** includes Drawings, and / or Product Standards and / or Specifications and / or Corporate / Plant Specifications and / or Technological Process Sheets and / or Technical Data Sheets and / or Jigs & Fixtures and / or Pattern & Dies and / or Special Gauges and / or Tools etc. Belonging to or wherein the Company has acquired from a third party a right of user and includes any improvement thereto from time to time whether carried out by the Company or by the Suppliers.
E. **"Intended Purpose"** means the purpose for which the Technical Information is provided to the supplier under or in connection with a contract.
F. **"Improvement"** includes any modification made to, or adaptation of, the Technical Information which enhances or is calculated to enhance the performance (Whether in terms of effectiveness or in terms of efficiency or both) of the product and / or the service to be provided by the Supplier under a Contract.

2. This Agreement shall come into force / deemed to have come into force, as the case may be, on the Effective Date; or, on the first date when the Technical Information or any part thereof is provided by BHEL to the supplier; whichever is earlier.

3. **Agreement deemed to be incorporated in each contract:** Unless and to the extent otherwise stipulated in the Contract, the conditions of this Agreement are deemed to be incorporated in all Contracts which may be entered into between the Company and the Supplier. Further, unless otherwise stipulated, the obligations under this Agreement are and will be independent of the obligations under the Contracts and such obligations of the Supplier hereunder will remain of full effect and validity notwithstanding that the period of validity of the Contract has expired by efflux of time stipulated therein; or, the contract has been discharged by performance or breach; or, the termination of the Contracts for any reason whatsoever.

4. **Ownership:**

4.1 The Company may, from time to time, make available to the Supplier, Technical Information on a non-exclusive basis by way of loan.

4.2 The Supplier acknowledges and agrees that all Technical Information and copies thereof that are or may be provided by the Company to the Supplier, are and shall remain the property of

BHEL or that of the concerned entity from whom BHEL has obtained the Technical Information and such Technical Information are and shall constitute trade secrets of the BHEL. Nothing in this Agreement or in any disclosures made hereunder by or on behalf of the Company shall be construed as granting upon the Supplier any patent, copyright or design or any other intellectual property rights of whatsoever description that subsists or may hereinafter exist in the Technical Information. Furthermore, nothing in this Agreement or in any disclosures made hereunder by or on behalf of the Company shall be construed as granting upon the supplier any license or right of use of such patent, copyright or design or any other intellectual property rights of whatsoever description which may now or hereafter exist in the Technical Information except for use of the Technical Information strictly in accordance with this Agreement and the contract and / or as directed in writing by the Company, solely for the Intended Purpose under the Contract.

4.3 Neither party is obligated by or under this Agreement to purchase from or provide to the other party any service or product and that any such purchase / sale of any product and / or service by one party to the other party will be governed by the Contract if any, that may be entered into by and between the Company and the Supplier.

4.4 The Supplier is / has been made well aware and acknowledges that the Technical Information being / which may be shared with it by the Company has been either generated by the Company by incurring huge investment and cost or obtained from foreign collaborators under Technical Collaboration Agreement (TCA) with stringent confidentiality conditions.

4.5 The supplier agrees and undertakes to adhere to confidentiality requirements as applicable to BHEL under a TCA and also ensure that the confidentiality requirements are adhered to by all its concerned employees or sub-contractors /suppliers (where permitted to be engaged by BHEL). Any damages, losses, expenses of any description whatsoever, arising out of or in connection with a breach of the confidentiality requirements under a TCA owing to any act or omission on the part of the supplier or its employees or sub-contractors / suppliers that is claimed by a foreign collaborator from the Company shall be wholly borne by the Supplier and it shall keep BHEL fully indemnified in this behalf. The demand by the Company shall be conclusive upon the Supplier who shall thereupon forthwith pay to the Company without demur, dispute or delay the amount as demanded without demanding any further proof thereof.

4.6 The Supplier agrees and undertakes that unless so decided and advised by the Company in writing all rights / title to any Improvement to the Technical Information shall vest in the Company. The Supplier undertakes and agrees to inform forthwith to the Company of any such Improvement made to the Technical Information and transfer all drawings / documents or other materials connected with such Improvement to the Company and also agrees to fully cooperate with the Company for protecting the Company's interests in such Improvements

in the Technical Information including but not limited to obtaining necessary protection for the intellectual property rights in such improvement, if so desired by the Company. If a question arises whether a modification amounts to improvement to the Technical Information, the same shall be decided by the Company and such decision shall be final and binding upon the supplier.

5. Use and Non – Disclosure:

5.1 Unless otherwise stipulated by the Company, all Technical Information made available to the supplier, by the Company shall be treated as Confidential irrespective of whether the same is marked or otherwise denoted to be Confidential or not.

5.2 The Supplier undertakes and agrees that the Technical Information in its possession shall be held in strict confidence and will be used strictly in accordance with this Agreement and solely for the Intended Purpose under the Contract. Use of the Technical Information for any other purpose other than Intended Purpose is prohibited.

5.3 In particular, the Supplier shall not use Technical Information or any Improvement in its possession for the manufacture or procurement of the product(s) or components or parts thereof or use the Technical Information or any portion thereof or any modification or adaptation thereof in any form to provide any product and / or service to any third party, without the prior written consent of the Company.

5.4 The Supplier shall not disclose any of such Technical Information to any third party without the prior written consent of the Company. The Supplier agrees that without prior written consent of the Company, the supplier shall not disclose to a third party about the existence of this Agreement, or of the fact that it is / was in possession of or has experience in the use of any Technical Information nor shall the Supplier share in any manner whatsoever, with a third party, the name or details of any Contract(s) awarded by the Company to it or performed by the Supplier or the scope of work thereof or share any document or correspondence by and between the Company and the supplier in or in connection with this Agreement or such Contract(s). Notwithstanding what is stated elsewhere, the overall responsibility of any breach of the confidentiality provisions under this Agreement shall rest with the Supplier.

5.5 This Supplier undertakes and agrees not to make copies or extracts of and not to disclose to other any or all of the Technical Information in its possession, except as follows:

(a) The Supplier may disclose the Technical Information to such of its officers and employees strictly to the extent as is necessary for such officer or employee for the Intended Purpose, provided that the Confidential Information (or copies thereof) disclosed shall be marked

clearly as the confidential and proprietary information of Company and that such officers and employees shall similarly be bound by undertakings of confidence, restricted use and non-disclosure in respect of the Technical Information. The Supplier shall be responsible for any breach of such confidentiality provisions by such officers and employees.

(b) With the prior written consent of Company, the supplier may disclose for the Intended Purpose such Technical Information as is provided for in such consent to such of its professional advisers: consultants, insurers and subcontractors who shall be similarly bound by undertakings of confidence, restricted use and non-disclosure in respect of such Technical Information.

(c) The Supplier shall not be prevented to make any disclosure required by (i) order of a court of competent jurisdiction or (ii) any competent regulatory authority or agency where such disclosure is required by law, provided that where the supplier intends to make such disclosure, it shall first consult Company and take all reasonable steps requested by it to minimize the extent of the Technical Information disclosed and to make such disclosure in confidence and also shall cooperate with the Company in seeking any protective order or any other remedy from proper authority in this matter.

6. <u>Exceptions:</u>

The Obligations of the Supplier pursuant to the provisions of this agreement shall not apply to any Confidential Information that:

a) was / is known to, or in the possession of the Supplier prior to disclosure thereof by the Company;
b) is or becomes publicly known, otherwise than as a result of a breach of this agreement by the Supplier.
c) is developed independently of the Disclosing party by the Supplier in circumstances that do not amount to a breach of the provisions of this Agreement or the Contract;
d) is received from a third party in circumstances that do not result in a breach of the provisions of this Agreement.

7. The Obligation of maintaining confidentiality of the Technical Information on each occasion, shall subsist for the entire duration during which the Technical Information / equipment is in possession of the Supplier and shall thereafter subsist for a further period of _____ years from the date when the complete Technical Information has been returned in portions on different dates, the period of ____ years will be reckoned from the date when the last portion of the Technical Information has been returned. Notwithstanding the expiry of the confidentiality obligation, the obligation of the Supplier under clause 5.4 shall continue to subsist for a further period of _____ years.

8. <u>Warranties & Undertakings</u>:

a) The Supplier undertakes to ensure the due observance of the undertakings of confidence, restricted use and non-disclosure by its persons to whom it discloses or releases copies or extracts of the Technical Information.

b) The Supplier shall keep the Technical Information or improvement made therein properly segregated and not mix up the same with any other material / documents belongings to him / it or to any other third party.

c) The Supplier further undertakes that he / it shall not hypothecate or give on lease or otherwise alienate or do away with any of the Technical Information and / or equipment of the Company, made available to him / it, and undertakes that he / it shall hold the same as a trustee, in capacity of custodian thereof and use / utilise the same solely for the purpose of executing the contract awarded by the Company.

d) The Supplier further undertakes that he / it shall return all the equipment and / or Technical Information as far as practicable in the same condition in which the same was made available to him / it by the Company together with any Improvement thereon and the documents connected with such Improvement, to the Company forthwith upon completion of the scope of work or contract for which such Technical Information was provided by the Company to it or as directed by the Company together with a confirmation by way of an affidavit or in such manner as directed by the Company that it has not retained any equipment and / or Technical Information / improvement thereof. In case any such equipment and / or Technical Information or thereof shall remain in his possession or is not capable of being returned, the retention and use of such Technical Information or improvement thereto shall continue to be governed by this Agreement.

e) The Supplier undertakes to indemnify the Company for all the direct, indirect and / or consequential losses, damages, expenses whatsoever including any consequential loss of business, profits suffered by the Company owing to breach by the Supplier of its obligations under this Agreement and / or the confidentiality requirements, if any, contained in the Contract and that the Supplier hereby agrees that the decision of the Company in all such or any such matter/s shall be final and binding on the Supplier. On mere written demand of the Company, the Supplier shall forthwith and without demur or delay pay to the Company any such sum as determined by the Company as the amount of loss or damage or expense which has been suffered by the Company. The Supplier agrees that the Company shall be entitled to withhold and appropriate any amount payable to the Supplier under any Contract then existing between the Company and the Supplier, in case the Supplier fails to make payment, in terms of the written demand, within 7 days thereof. Without prejudice to the forgoing actions, in respect to any breach of this Agreement, the Company shall be entitled to take

any other action against the Supplier as per applicable laws, the Contract, Company's applicable policies, guidelines rules, procedures, etc.

9. Without prejudice to any other mode of recovery as may be available to the Company for recovery of the amount determined as due as per Clause 9 (f) hereinabove, the Company shall have a right to withhold, recovery and appropriate the amount due towards such losses, damages, expenses, from any amount due to the Supplier in respect of any other Contract (s) placed on him / it by any department / office / unit/ division of the said Company.

10. <u>Arbitration & Conciliation:</u>

Except as provided elsewhere in this Contract, in case amicable settlement is not reached between the Parties, in respect of any dispute or difference; arising out of the formation, breach, termination, penalty deduction, validity or execution of the Contract; time extension, or, the respective rights and liabilities of the Parties; or, in relation to interpretation of any provision of the Contract; or, in any manner touching upon the Contract, then, either Party may, by a notice in writing to the other Party refer such dispute or difference to the sole arbitration . Sole arbitrator to be appointed by Head of the Unit - BHEL, HPEP.

The Arbitrator shall pass a reasoned award and the award of the Arbitrator shall be final and binding upon the Parties.

Subject as aforesaid, the provisions of Arbitration and Conciliation Act 1996 (India) or statutory modifications or re-enactments thereof and the rules made thereunder and for the time being in force shall apply to the arbitration proceedings under this clause.

The seat of arbitration shall be Sangareddy / Hyderabad, Telangana. The language of arbitration shall be English and the documents shall be submitted in English.

The cost of arbitration shall initially be borne equally by the Parties subject to the final apportionment of the cost of the arbitration in the award of the Arbitrator.

Subject to the arbitration in terms of clause 46 of ITB (clause 27 of ATC GeM), the courts at Sangareddy, Telangana State shall have exclusive jurisdiction over any matter arising out of or in connection with this contract.

Notwithstanding the existence or any dispute or differences and/or reference for the arbitration, the Contractor shall proceed with and continue without hindrance the performance of its obligations under this Contract with due diligence and expedition in a professional manner except where the Contract has been terminated by either Party in terms of this Contract.

ARBITRATION FOR CONTRACT WITH PUBLIC SECTOR ENTERPRISE (PSE) OR A GOVERNMENT DEPARTMENT

In the event of any dispute or difference relating to the interpretation and application of the provisions of commercial contract(s) between Central Public Sector Enterprises (CPSEs/ Port Trusts inter se and also between CPSEs and Government Departments/Organizations (excluding disputes concerning Railways, Income Tax, Customs & Excise Departments), such dispute or difference shall be taken up by either party for resolution through AMRCD as mentioned in DPE 0M No 4(1)/2013-DPE(GM/FTS 1835 dated 22-05-2018

CONCILIATION CLAUSE FOR CONDUCTING CONCILIATION PROCEEDINGS UNDER THE BHEL CONCILIATION SCHEME, 2018: The Parties agree that if at any time (whether before, during or after the arbitral or judicial proceedings), any Disputes (which term shall mean and include any dispute, difference, question or disagreement arising in connection with construction, meaning, operation, effect, interpretation or breach of the agreement, contract or the Memorandum of Understanding, penalty deduction, time extension), which the Parties are unable to settle mutually, arise inter-se the Parties, the same may, be referred by either party to Conciliation to be conducted through Independent Experts Committee to be appointed by competent authority of BHEL from the BHEL Panel of Conciliators.

The proceedings of Conciliation shall broadly be governed by Part-III of the Arbitration and Conciliation Act 1996 or any statutory modification thereof and as provided in Procedure in http://www.bhel.com/index.php/story_details?story=2454 . The Procedure together with its Formats will be treated as if the same is part and parcel hereof and shall be as effectual as if set out herein in this ITB

11. Governing Law & Jurisdiction:

This agreement shall be construed and interpreted in accordance with the laws of India and shall have exclusive jurisdiction of Sangareddy/Hyderabad courts, Telangana, India.

SIGNATURE

WITNESSES

1

Name:

Address:

2

Name:

Address:

GUIDELINES FOR REVERSE AUCTION - 2021

(AA:SSP:RA:05 dated 08.03.2021)

Record of Amendments		
Amendment No.	Date of issue	Remarks
01	10.03.2021	Clause 10.1 modified
02	02.09.2023	Clause 10.1 modified

SOURCING STRATEGY & POLICY
CORPORATE OPERATIONS MANAGEMENT
BHEL, New Delhi

Guidelines for Reverse Auction – 2021

Doc. No. AA:SSP:RA:05
Dated: 08.03.2021

1.0 Scope

This document describes the guidelines to be followed by each Unit/ Division/ Region for conducting Reverse Auction (RA) for procurement of material/ works/ services. These guidelines will be applicable for all purchases/ contracts to be awarded under Purchase/ Works policy and the RA shall follow the philosophy of English Reverse (No ties). Based on these guidelines, Units/ Divisions/ Regions (hereinafter referred as 'units') may issue their own Departmental Procedures without changing the intent and spirit of the guidelines contained in this document. These guidelines will supersede earlier guidelines issued vide AA:SSP:RA:04 dated 04.03.2020.

English Reverse (No ties) is a type of auction where the starting price and bid decrement are announced before start of online reverse auction. The interested bidders can thereupon start bidding in an iterative process wherein the lowest bidder at any given moment can be displaced by an even lower bid of a competing bidder, within a given time frame. The bidding is with reference to the current lowest bid in the reverse auction. All bidders will see the current lowest quoted price and their rank. The term 'No ties' is used since more than one bidder cannot give an identical price, at a given instant, during the reverse auction. In other words, there shall never be a tie in the bids.

2.0 Intent of Reverse Auction

To derive maximum benefit in cost savings through competitive bidding.

3.0 Upfront declaration in NIT

Wherever it is felt that procurement may be done through Reverse Auction, the bids shall be invited in two parts/ three parts or single part bid (Price Bid) where Techno-Commercial MoU already exists. Wherever, the evaluation is done for individual line item, separate sealed envelope price bid for each line item shall be taken.

Decision to go for RA would be taken before floating of the tender. In case it is decided to go for RA, same shall be declared upfront in NIT by inserting the following **clause:**

"BHEL shall be resorting to Reverse Auction (RA) (Guidelines as available on www.bhel.com) for this tender. RA shall be conducted among the techno-

commercially qualified bidders.

Price bids of all techno-commercially qualified bidders shall be opened and same shall be considered for RA. In case any bidder(s) do(es) not participate in online Reverse Auction, their sealed envelope price bid along with applicable loading, if any, shall be considered for ranking."

4.0 Aspects to be considered for RA

Following aspects may be considered by the competent authority (empowered to approve the ordering) to decide before floating of the tender if RA is to be conducted for that particular tender:

a) Number of techno-commercially qualified bidders in previous tender for same/ similar class of item
b) Price volatility of the item(s) under consideration
c) Past purchase experience of similar item(s)
d) Tender Value of the item(s) under procurement
e) Any other aspect which may be specific to tender

Note: Decision to go for RA or not will be on case to case basis with recorded reasons.

5.0 RA Committee

Purchase/ Tender committee, if already in place, shall also act as RA committee. Purchase representative will be the convener. In case Purchase/ Tender committee has not been formed, the Product Manager/ MM Head/ Department Head, shall constitute RA committee consisting of representatives *(rank as per DoP of tender/ negotiation committee)* from departments of Engineering/ Indenter/ User, Purchase and Finance. This committee will work for a specific tender. The role of RA committee shall be as below:

- To vet the comparative statement comprising sealed envelope price bids received, MSE status, qualification against Public Procurement (Preference to Make in India), Order 2017 (PPP-MII, Order 2017) of all techno-commercially qualified bidders, loading etc. before sending it to the service provider for RA.
- To decide and record the 'Start-Price' and 'Bid Decrement'.
- To observe the RA process and declare RA as successful.

6.0 Business rules for RA

Model Business rules (annexure I) and other annexures II to VI are attached. MM shall prepare and fill in the required details in the annexures at appropriate places like:

- Enquiry/ Request for Quotation (RFQ) number
- Name and Addresses of the bidders
- Items description, quantities/ weight, Specification
- Date and time of opening and closing of RA
- Extension conditions
- Loading Criteria/ Formulae
- Foreign Exchange (FE) rates for evaluation
- Taxes & Duties
- Freight & Insurance
- Bidders' training, if required, etc.

The calculation sheet e.g. excel sheet (which will help to arrive at 'Total Cost to BHEL') which is communicated to respective bidders of RA, will be prepared by MM and vetted by Finance. This calculation sheet will be finalized based on the evaluation criteria specified in the NIT and will be same based on which sealed envelope price bids have been evaluated.

MM shall issue a mandate (annexure II) to the service provider covering business rules etc. and inform about event, calculation sheet etc. to all techno-commercially accepted bidders.

7.0 Role of Service Provider

- Acknowledge the receipt of mandate from BHEL.
- Contact the bidders, provide business rules and train them, as required.
- Get the process compliance form (annexure III) signed by all the participating bidders before RA event.
- Conduct the event as per the contract and business rules.
- Submit the Login Reports, Results, History sheet and authorized final bid from the bidders.
- To obtain price breakup from successful bidder and submit the same to BHEL.

8.0 Start price for RA shall be lowest of sealed envelope price bid.
Note: Wherever more than one lowest sealed envelope price bids are identical, RA committee shall declare the start price by reducing the lowest sealed envelope price bid by maximum of one decrement.

9.0 Witnessing Auction

Access to witness the RA shall be available to the concerned officials of BHEL (Indenter/ Finance Officials/ Purchase Officials), nominated by Head MM/ Purchase/ Contracts.

10.0 Reverse Auction Process

10.1 Reverse Auction will be conducted if two or more bidders are techno-commercially qualified. In case of two or three qualified bidders, there shall be no elimination of H1 bidder (whose quote is highest in sealed envelope price bid). In case of four qualified bidders, the H1 bidder shall be eliminated whereas in case of five qualified bidders, H1 & H2 bidders shall be eliminated. However, in case of six or more qualified bidders are available, RA would be conducted amongst first 50% of the bidders arranged in the order of prices from lowest to highest. Number of bidders eligible for participating in RA would be rounded off to next higher integer value if number of qualified bidders is odd (e.g. if 7 bids are qualified, then RA will be conducted amongst lowest four bidders). However, there will be no elimination of qualified bidders who are MSE or qualifying under PPP-MII, Order 2017, provided their bids are within their respective margin of purchase preference {presently 15% for MSEs and 20% for PPP-MII, or as amended from time to time}.

In case of multiple H1 bidders, all H1 bidders (except MSEs and bidders qualifying under PPP-MII, Order 2017, who are within the margin of purchase preference) shall be removed provided minimum two bidders remain in fray, else no H1 removal.

10.2 The lowest bidder in sealed envelope price bid shall be shown as current L1 automatically by the system. System shall have the provision to indicate this bid as current L1 for further bidding. This price can be displaced by an even lower bid of a competing bidder.

If the start price is lower than the lowest sealed envelope price bid (in line with clause 8.0), on acceptance of such start price by any bidder this bid would be indicated as current L1 for further bidding. However, if no bidder accepts the start price, RA shall be treated as cancelled for the respective line item(s) and the tender shall be processed accordingly.

In case of no further bidding, RA will be deemed to have been successful with current L1 bidder. During RA, all bidders will see their rank and current L1 price on the screen. Once the RA is done, the ranking status would be based on the last quoted price of the bidder(s) irrespective of the quote received in RA or sealed envelope price bid.

10.3 No bidder shall be allowed to lower its bid below the current L1 by more than 5 decrements at one go.

11.0 Processing of case after RA

11.1 Wherever the evaluation is done on total cost basis, after Reverse Auction, prices of individual line items shall be reduced on pro-rata basis.

11.2 In case of splitting requirement, bidders who were removed from participation in RA may also be considered for counter offer if the pre-stated (NIT) numbers of suppliers do not accept the counter offer. However, principle of splitting to N-1 bidder shall be maintained in line with extant Purchase Policy/ Work Policy.

11.3 Reasonability of rates received through RA to be ascertained as per extant Policy provisions.

12.0 Payment to the Service Provider

Payment shall be made as per the agreed terms of the Framework Agreement with the service provider based on the mandate issued and service provider's invoice certified by the respective MM. If the RA event is conducted as per the mandate given by BHEL and agreed procedure, payment shall be made to the service provider irrespective of the auction outcome.

13.0 Others

13.1 If RA is being conducted for multiple line items and L1 is to be decided for individual items, number of items in single screen be restricted to 10 (ten) to avoid scrolling by the bidders.

13.2 In case of enquiry through e-Procurement, the sealed electronic price bid (e-bid) is to be treated as sealed envelope price bid.

13.3 BHEL will inform bidders the details of service provider who will provide business rules, all necessary training and assistance before commencement of online bidding.

13.4 Bidders will be advised to read the 'Business Rules' indicating details of RA event carefully, before reverse auction event.

13.5 Model annexures are enclosed. However, to suit specific requirement of the Units changes in the annexures may be done with the approval of respective MM Head of Unit. Such changes shall specifically be communicated to the service provider before the RA event.

---xxx---

Doc. No. AA:SSP:RA:05
Dated: 08.03.2021

Business Rules for Reverse Auction

Annexure – I

This has reference to tender no ***{tender number….date***…}. BHEL shall finalise the Rates for the supply of {*item name}* through Reverse Auction mode. BHEL has made arrangement with M/s. {*Service provider},* who shall be BHEL's authorized service provider for the same. Bidders should go through the instructions given below and submit acceptance of the same.

The technical & commercial terms are as per (a) BHEL Tender Enq. No. {…} dated {...}, (b) Bidders' technical & commercial bid (in case of two part bid) and (c) subsequent correspondences between BHEL and the bidders, if any.

1. Procedure of Reverse Auctioning

i. Price bids of all techno-commercially qualified bidders shall be opened.

ii. **Reverse Auction**: The 'bid decrement' will be decided by BHEL.

iii. The lowest bidder in sealed envelope price bid shall be shown as current L1 automatically by the system and no acceptance of that price is required. System shall have the provision to indicate this bid as current L1.

iv. Bidders by offering a minimum bid decrement or the multiples thereof can displace a standing lowest bid and become "L1" and this continues as an iterative process. However, no bidder shall be allowed to lower its bid below the current L1 by more than 5 decrements at one go.

v. After the completion of the reverse auction, the Closing Price shall be available for further processing.

vi. Wherever the evaluation is done on total cost basis, after Reverse Auction, prices of individual line items shall be reduced on pro-rata basis.

2. Schedule for reverse auction: The Reverse Auction is tentatively scheduled on *{date}: ;{start time}: ;{Close Time: }*.

3. Auction extension time: If a bidder places a bid in the last {…} minutes of closing of the Reverse Auction and if that bid gets accepted, then the auction's duration shall get extended automatically for another {…} minutes,

for the entire auction (i.e. for all the items in the auction), from the time that bid comes in. Please note that the auto-extension will take place only if a bid comes in those last {…} minutes and if that bid gets accepted as the lowest bid. If the bid does not get accepted as the lowest bid, the auto-extension will not take place even if that bid might have come in the last {…} minutes. In case, there is no bid in the last {…} minutes of closing of Reverse Auction, the auction shall get closed automatically without any extension. However, bidders are advised not to wait till the last minute or last few seconds to enter their bid during the auto-extension period to avoid complications related with internet connectivity, network problems, system crash down, power failure, etc.

The above process will continue till completion of Reverse Auction.

Complaints/ Grievances, if any, regarding denial of service or any related issue should be given in writing thru e-mail/ fax to M/s. {Service provider} with a copy to BHEL within 15 minutes prior to initial closing time of Reverse Auction.

4. **Bid price:** The Bidder has to quote the {……} Price inclusive of Packing & Forwarding charges, all the routine & type tests as per tender scope, taxes, duties, freight and insurance as specified in tender document. including loading (if indicated by BHEL due to deviations in technical/ commercial terms) for the Items specified. Details are as shown in Excel Sheet for calculation of total cost to BHEL (To be specified by Unit as per NIT conditions).

5. **Bidding currency and unit of measurement:** Bidding will be conducted in *Indian Rupees* per *Unit* of the material as per the specifications {...}

   In case of foreign currency bids, exchange rate (TT selling rate of State Bank of India) as on scheduled date of tender opening (Part-I bid) shall be considered for conversion in Indian Rupees. If the relevant day happens to be a Bank holiday, then the forex rate as on the previous bank (SBI) working day shall be taken.

6. **Validity of bids:** Price shall be valid for {… *days}* from the date of reverse auction. These shall not be subjected to any change whatsoever.

Business Rules for Reverse Auction

Annexure – I

7. **Lowest bid of a bidder**: In case the bidder submits more than one bid, the lowest bid at the end of Reverse Auction will be considered as the bidder's final offer to execute the work.

8. Unique user IDs shall be used by bidders during bidding process. All bids made from the Login ID given to the bidders will be deemed to have been made by the bidders/ bidders' company.

9. **Post auction procedure**: BHEL will proceed with the Lowest Bid in the Reverse Auction for further processing.

10. Any commercial/ technical loading shall be separately intimated to respective bidders prior to RA. The excel sheet provided in this regard shall cover all these aspects. Commercial/ technical loading if any, shall be added by the respective bidder in its price during Reverse Auction. Modalities of loading & de-loading shall be separately intimated to the bidders. The responsibility for correctness of total cost to BHEL shall lie with the bidders.

11. Reverse auction shall be conducted by BHEL (through M/s {*Service Provider*}), on pre-specified date, while the bidders shall be quoting from their own offices/ place of their choice. Internet connectivity shall have to be ensured by bidders themselves.

    During the RA process if a bidder is not able to bid and requests for extension of time by FAX/ email/ phone then time extension of additional 15 minutes will be given by the service provider provided such requests come before 5 minutes of auction closing time. However, only one such request per bidder can be entertained.

    In order to ward-off contingent situation of connectivity failure bidders are requested to make all the necessary arrangements/ alternatives whatever required so that they are able to circumvent such situation and still be able to participate in the reverse auction successfully. Failure of power or loss of connectivity at the premises of bidders during the Reverse auction cannot be the cause for not participating in the reverse auction. On account of this, the time for the auction cannot be extended and neither BHEL nor M/s. {*Service provider*} is responsible for such eventualities.

12. Proxy bids: Proxy bidding feature is a pro-bidder feature to safe guard the bidder's interest of any internet failure or to avoid last minute rush. The proxy feature allows bidders to place an automated bid in the system directly in an auction and bid without having to enter a new amount each time a competing bidder submits a new offer. The bid amount that a bidder enters is the minimum that the bidder is willing to offer. Here the software bids on behalf of the bidder. This obviates the need for the bidder participating in the bidding process until the proxy bid amount is decrementally reached by other bidders. When proxy bid amount is reached, the bidder (who has submitted the proxy bid) has an option to start participating in the bidding process.

The proxy amount is the minimum amount that the bidder is willing to offer. During the course of bidding, the bidder cannot delete or change the amount of a proxy bid.

Bids are submitted in decrements (decreasing bid amounts). The application automates proxy bidding by processing proxy bids automatically, according to the decrement that the auction originator originally established when creating the auction, submitting offers to the next bid decrement each time a competing bidder bids, regardless of the fact whether the competing bids are submitted as proxy or standard bids. However, it may please be noted that if a manual bid and proxy bid are submitted at the same instant manual bid will be recognized as the L1 at that instant.

In case of more than one proxy bid, the system shall bid till it crosses the threshold value of 'each lowest proxy bid' and thereafter allow the competition to decide the final L1 price.

Proxy bids are fed into the system directly by the respective bidders. As such this information is privy only to the respective bidder(s).

13. Bidders are advised to get fully trained and clear all their doubts such as refreshing of Screen, quantity being auctioned, tender value being auctioned etc from M/s {*Service provider*}.

14. M/s. {*Service provider}*, shall arrange to demonstrate/ train the bidder or bidder's nominated person(s), without any cost to bidders. M/s. {*Service provider}*, shall also explain the bidders, all the business rules related to the

Reverse Auction. Bidders are required to submit their acceptance to the terms/ conditions/ modalities before participating in the Reverse Auction in the process compliance form as enclosed. Without this, the bidder will not be eligible to participate in the event.

15. Successful bidder shall be required to submit the final prices (L1) in prescribed format (Annexure – VI) for price breakup, quoted during the Reverse Auction, duly signed and stamped as token of acceptance without any new condition (other than those already agreed to before start of auction), after the completion of auction to M/s. {*Service provider*} besides BHEL within two working days of Auction without fail.

16. Any variation between the final bid value and that in the confirmatory signed price breakup document will be considered as tampering the tender process and will invite action by BHEL as per extant guidelines for suspension of business dealings (as available on www.bhel.com).

17. Bidders' bid will be taken as an offer to execute the work/ supplies the item as per enquiry no. *{…}* dt. *{…}*. Bids once made by the bidder, cannot be cancelled/ withdrawn and bidder shall be bound to execute the work as mentioned above at bidder's final bid price. Should bidder back out and not execute the contract as per the rates quoted, BHEL shall take action as per extant guidelines for suspension of business dealings (as available on www.bhel.com).

18. Bidders shall be able to view the following on their screen along with the necessary fields during Reverse Auction:

a. Leading (Running Lowest) Bid in the Auction (only total price of package)
b. Bid Placed by the bidder
c. Start Price
d. Decrement value
e. Rank of their own bid during bidding as well as at the close of auction.

19. BHEL's decision on award of contract shall be final and binding on all the Bidders.

20. BHEL reserves the right to extend, reschedule or cancel the Reverse Auction process at any time, before ordering, without assigning any reason, with

intimation to bidders.

21. BHEL shall not have any liability to bidders for any interruption or delay in access to the site irrespective of the cause. In such cases, the decision of BHEL shall be binding on the bidders.

22. Other terms and conditions shall be as per bidder's techno-commercial offers and other correspondences, if any, till date.

23. If there is any clash between this business document and the FAQ available, if any, in the website of M/s. {*Service provider}*, the terms & conditions given in this business document will supersede the information contained in the FAQs. Any changes made by BHEL/ service provider (due to unforeseen contingencies) after the first posting shall be deemed to have been accepted if the bidder continues to access the portal after that time.

24. Bidder shall not divulge either his Bids or any other exclusive details of BHEL to any other party. If the Bidder or any of his representatives are found to be involved in Price manipulation/ cartel formation of any kind, directly or indirectly by communicating with other bidders, action *as per extant BHEL guidelines for suspension of business dealings (as available on www.bhel.com)*, shall be initiated by BHEL.

Doc. No. AA:SSP:RA:05
Dated: 08.03.2021

Mandate to Service Provider

Annexure – II

Ref : **Date :**

To,
M/s. {*Service provider*}

Sub: Providing of Services for Reverse Auction.
Ref: No {…} date {…}

Dear Sir,

Please conduct Reverse Auction as per the following details:

- **Scope:** Auction event management with training of BHEL and its bidders.
- Seek process compliance form from all the bidders provided by BHEL before start of RA event. In case of postponement of event to some other date, ensure acknowledgement from each bidder.
- Price: Rs. {……}/- . No other duties, Taxes, levies etc. except service tax @ {……}% shall be payable for conducting reverse auction. This price is firm.
- Payment Terms: 100% payment after successful completion of Auction.
- Start Price: L1 as per the CST (Comparative statement) of the envelope sealed bid shall be marked as L1 automatically by the system at the start of the auction, provided the L1 bidder participates in the RA by submitting the process compliance form. In case the Process Compliance form is not submitted by the L1 bidder, still its price has to be mapped as start price of RA for further bidding in RA.
  Wherever there are more than one L1 in CST, the start price shall be the L1 price reduced by one decrement and the same shall be accepted by the interested bidder(s) for start of RA process.
- Completion of Auction Process: The auction process shall be deemed to have been successfully completed on receipt and acceptance of final report including hard copy/ email of the final bid with price break up, duly signed by the successful bidder who has participated in the reverse auction. The bill shall be submitted along with the completion report to the undersigned.
- Business Rules of the Reverse Auction are as per *Annexure – I*.
- The list of bidders with their contact details is given in *Annexure – IV*. and the details of the item (s) to be Reverse Auctioned are as per *Annexure – V*.
- Please acknowledge receipt of this letter order and also confirm that final report (duly signed and stamped by M/s. {*Service provider*}) including hard copy/ email of the final bid with breakup of prices duly signed by the successful bidder (duly endorsed by M/s. {*Service provider*}) shall be submitted within **four** working days of conclusion of auction.

Yours sincerely,

(for and on behalf of BHEL)

Mandate to Service Provider

Annexure – II

Note:

If the event has been conducted as per mandate, you shall be paid irrespective of RA outcome.

Buyer Name	- *Name of BHEL Unit* - *Full postal address* - *Fax:* - *Phone:* - *Email:* - *Contact person name:* - *Phone:* -
Auction to be conducted by	- *Name of Service provider* - *Full postal address* - *Fax:* - *Phone:* - *Email:* - *Contact person name:* - *Phone:* -
Date of Auction	- *Date of Auction* - *Reverse auction time:* - *Auction website:* -
Documents Attached: **(To be sent to the bidders)**	1) Business rules for Reverse Auction (*Annexure-I*) 2) Process Compliance Form (*Annexure-III*) 3) Details of item (s) to be Reverse Auctioned (*Annexure-V*) 4) Post RA Price confirmation by bidder (*Annexure-VI*)

Doc. No. AA:SSP:RA:05
Dated: 08.03.2021

Process Compliance Form

Annexure – III

(The bidders are required to print this on their company's letterhead and sign, stamp before RA)

To
- M/s. {*Service provider*
- *Postal address}*

Sub: Agreement to the Process related Terms and Conditions

Dear Sir,

This has reference to the Terms & Conditions for the Reverse Auction mentioned in the RFQ document for {Items} against BHEL enquiry/ RFQ no.{……} dt. {…….}
This letter is to confirm that:

1) The undersigned is authorized official/ representative of the company to participate in RA and to sign the related documents.
2) We have studied the Reverse Auction guidelines (as available on www.bhel.com), and the Business rules governing the Reverse Auction as mentioned in your letter and confirm our agreement to them.
3) We also confirm that we have taken the training on the auction tool and have understood the functionality of the same thoroughly.
4) We also confirm that, in case we become L1 bidder, we will FAX/ email the price confirmation & break up of our quoted price as per *Annexure - VI* within **two** working days (of BHEL) after completion of RA event, besides sending the same by registered post/ courier both to M/s. BHEL and M/s. {*Service provider.}*

We, hereby confirm that we will honor the Bids placed by us during the auction process.

With regards
Signature with company seal
Name –
Company / Organization
Designation within Company / Organization
Address of Company / Organization

- **Sign this document and FAX/ email it to M/s *{Service provider}* at *{……..}* prior to start of the Event.**

Doc. No. AA:SSP:RA:05
Dated: 08.03.2021

List of bidders and their address/ contact person details

Annexure – IV

Sl. No.	Address	Contact Person
1	- *Name of bidder* - *Full postal address* - *Fax:* - *Phone:* - *Email:*	- *Contact person name:* - *Phone:* - *Email:*
2		
3		
..		
..		

Details of item (s) for Reverse Auction

Annexure – V

1. ***{Details of items including quantity, specification, Enquiry no. & date***

   1.
   2.
   ..

   ..
   ..
   }

Doc. No. AA:SSP:RA:05
Dated: 08.03.2021

RA price confirmation and breakup
(To be submitted by L1 bidder after completion of RA)

Annexure – VI

To
- M/s. *Service provider*
- *Postal address*

CC: M/s BHEL
{Unit-
Address-}
Sub: **Final price quoted during Reverse Auction and price breakup**

Dear Sir,

We confirm that we have quoted.

Rs.{____in value & in words_____} for item(s) covered under tender enquiry No. {...} dt.{…}

Total price of the items covered under above cited enquiries is inclusive of {*Packing & forwarding, GST, E.D., C.S.T., freight and insurance charges up to {……} District,{……..} State and Type Test Charges etc., (exclusive of service tax), other as per NIT*}

as our final landed prices as quoted during the Reverse Auction conducted today {*date*} which will be valid for a period of {___ **in nos. & in words** ___} days.

The price break-up is as given below.

========
Total - Rs. **in value & in words**
========

Yours sincerely,

For _____

Name:
Company:
Date:
Seal:

(Attachment to Enquiry No. XXXXXXXXXX Due on Date XX.XX.XXXX for submission by 11.00 hrs to open from 14.00 hrs.)

INSTRUCTIONS TO BIDDER (ITB)

NOTE: Bidder to confirm in affirmative by typing "YES" or "Applicable Data" in the response column. Deviations, if any shall be recorded in deviations/comments column (Separate sheet can be attached if needed). Non deviatable clauses are indicated as "NON DEVIATABLE".

Sl. No.	DETAILED TERMS & CONDITIONS	BIDDER RESPONSE (YES/NO)	DEVIATIONS / COMMENT
1	**SCOPE OF SUPPLY:**		
	Signed & Sealed offers are invited for the Scope of Supply of goods or services or both as detailed in the enquiry. Relevant enclosures/supporting documents / catalogue, if any shall be enclosed to the technical offer.		
2	**DEFINITIONS**		
A	'The Buyer' means BHEL-HPEP, Ramachandrapuram, Hyderabad-502 032 of Bharat Heavy Electricals Limited (A Govt. of India Undertaking) incorporated under the companies Act having its registered office at BHEL House, Siri fort, New Delhi-110049, India and shall be deemed to include its successors and assigns. It may also be referred to as BHEL.		
B	'The Bidder' means the persons, firm, company or organization on whom the Purchase order is placed and shall be deemed to include the bidder's successors, representatives, heirs, executors and administrator as the case may be. It may also be referred to as Contractor, supplier or bidder.		
C	'Contract' shall mean and include the Purchase order incorporating various documents viz., Notice Inviting Tender (NIT), Offer, Letter Of Intent/Acceptance (LOI/LOA), Instruction to Bidders (ITB) and Special Conditions of Contract (SCC), specifications, inspection/quality plan, schedule of prices and quantities, drawings, if any, enclosed by Bidder/ provided by the Buyer or his authorized nominee and the samples or patterns if any to be provided under the provision of the contract. In case of any inconsistency or contradiction between any of the documents, the order of precedence shall be Purchase Order, LOI/LOA followed by Minutes Of Meeting (MOM), NIT, SCC, ITB.		
D	'Parties to the contract' shall mean the bidder and the buyer as named in the main body of the Purchase Order.		
E	'Goods/Material' shall include Works and Services which are incidental or consequential to supply.		
3	**GENERAL INSTRUCTIONS:**		
A	Mode of submission of offer shall be as indicated in SCC		**Non Deviatable**
B	The quotation should be neatly typed and free from over writing/ erasures. Any correction or addition must be authenticated. The offer including annexures and brochures should be submitted in English / Hindi. All Pages of Techno Commercial Bids (Main Pages), ITB, SCC should be signed and Stamped. If there is a conflict in case of bilingual submission, the submission in English will be final. Prices shall be quoted both in figures and words. In case of any discrepancy in value, the prices quoted in words shall be considered for evaluation and establishing L1 Status. Any discount / revised offer / bids submitted by a bidder on his own shall be considered, provided it is received on or before the due date and time of offer / bid submission (Part-1). Conditional discounts shall not be considered for evaluation of tenders.		**Non Deviatable**
C	Incomplete offers are liable for rejection.		**Non Deviatable**
D	Bidders to please note that the Terms & conditions contained in this document and SCC are to be read fully before submission of quotations.		**Non Deviatable**
E	Bidders are advised to comply with ITB and SCC, should there be any deviations (where deviations are permitted), it shall be entered in the deviation column. BHEL reserves the right to reject such offers or load the bid suitably for evaluation.		**Non Deviatable**
F	Offers shall be submitted directly, only by the bidder or by their authorized representative / agent and the offer should be in line with the regulatory guidelines (i.e. A valid Agency agreement between principal bidder and agent / representative shall be attached and the agreement shall cover the scope of services rendered by Agent, Agency Commission and any other information called for as per the regulatory guidelines). OEM / Mill details shall be provided if bidder is not a manufacturer. Bid envelops shall bear the name of Bidder. In case of submission through authorized representative/agent, the name of representative/agent should also be mentioned apart from bidder name.		**Non Deviatable**
G	Offer received after the specified time and date of submission will be rejected. No further correspondence shall be entertained.		**Non Deviatable**
H	Unsolicited offers will not be considered.		**Non Deviatable**
4	**OTHER PARTICULARS (Please indicate applicable data)**		
A	Name of the Bid currency (freely tradable foreign currency for imports and Indian Rupees for indigenous purchase).		
B	Name of the Port of loading and Port of Discharge (applicable to imports).		

5	**BID SUBMISSION PROCEDURE FOR CONVENTIONAL TENDER:**		
A	**For Single Part Bids:**		
	The complete bid shall be submitted in a single sealed cover superscribing the Tender number and due date, addressed to Sr DGM/CMM, Vendor Complex, BHEL, Hyderabad and sent by appropriate mode to above address or dropped in tender box located at vendor complex on or before the specified time and date of submission of offers, preferably in the bidder's envelope. E- mail bids shall be sent to mail ID pricebid_hyd@bhel.in only as an attachment.		**Non Deviatable**
B.	**For two-Part Bids:**		
i	The offer is to be submitted in two parts viz., Techno-commercial Bid - (Part-I), with all technical specification & scope including bill of material etc., Earnest Money Deposit (EMD)(wherever applicable) and unpriced bid with all applicable Commercial Terms and Conditions, rates of agency commission, duties, taxes and other charges, Signed and Stamped ITB and SCC, <u>except the price,</u> shall be kept in a separate sealed cover, superscribing enquiry No. (Techno-Commercial Bid) and due date AND Price Bid (Part-II), containing ONLY the price (including agency commission, if any) and the applicable duties/taxes/other charges shall be kept in a separate sealed cover superscribing Enquiry no. (Price bid) & due date. Both the above covers (Part –I & II) shall be kept in a Third cover superscribing Enquiry no. & due date. Bidder can also submit offer through email. Technical offer to be submitted to mail ID technicalbid_hyd@bhel.in, and price bid to be submitted to mail ID pricebid_hyd@bhel.in only as an attachment. Interchanging the information in the mails may lead to rejection of the offer. Bidder shall have no claim on e-mail offers sent to any other e-mail ID. In case of e-mail offers, the mail subject should contain Enquiry Number, Due date and Bidder name. Bidder address including contact details shall be mentioned in the content of the mail. Without these details, the offer is liable for rejection. All techno commercial terms & conditions mutually agreed prior to price bid opening shall prevail and supersede any terms and conditions specified otherwise in price bid.		**Non Deviatable**
ii	The bidders whose bids are techno commercially not accepted will be informed and EMD shall be returned wherever submitted.		
iii	Bidders will be allowed to submit the impact on their quoted prices due to changes in technical scope, specifications, and commercial terms/conditions as specified in NIT which in the opinion of BHEL , warrant changes in prices.		**Non Deviatable**
C	Bids shall be opened on due time and date in the presence of bidders who may like to be present. Only one representative of each bidder shall be permitted to attend the bid opening. Only the price bids of bidder (in case of two part bid) whose techno commercial bids are accepted will be opened later on a specified date.		**Non Deviatable**
6	**DELIVERY TERMS**		
A	**Indigenous Purchase**		
	a. Terms of Delivery for dispatches to BHEL Hyderabad (HPEP) shall be FOR Destination. b. Terms of Delivery for Direct Dispatch (DD) items shall be Ex Works. i. Incase specified in SCC that insurance is in customer/BHEL scope, price quoted shall include Freight charges up to Destination. ii. Otherwise, price quoted shall include Freight and Insurance upto Destination. However, beneficiary for insurance shall be BHEL.		
B.	**Imports**		
	The goods shall be delivered on FCA capital airport basis in case of freight by Air and CIP basis in case of freight by Sea.		
7	**Documentation for Payment**		
A	**Indigenous Purchase**		
	Following documents shall be submitted immediately on dispatch of material to BHEL HPEP / Site a. Original Tax Invoice (Refer ITB clause no 11 for Tax Compliance) b. Packing List - clearly showing number of packages, gross weight and net weight. c. Test/Warranty/Guarantee certificates, O&M Manual (If specified in SCC) d. Insurance intimation/declaration certificate e. Pre-dispatch Inspection report /Third Party Inspection Certificates. f. Consignee copy of LR signed & stamped by Customer/Site representative for DD Items g. e-waybill h. Any other documents as specified in SCC. Softcopies of the above documents shall be uploaded in Pradan portal https://hpep.bhel.com/mm immediately after dispatch of the material.		**Non Deviatable**

B	**Imports** i) Bidder shall inform BHEL the readiness of material along with packing details 30 days in advance from the date of delivery. For Hazardous cargo/DG cargo, supplier must provide the following documents prior to handing over shipment to freight forwarder, wherever freight is in BHEL scope: 1. Valid MSDS 2. DGD certificate with appropriate UN numbers. 3. Labelling and marking on DG cargo along with photo of packaging. 4. Self-declaration for consignment 5. Packaging Certificate as per DG Standards 6. TSA Approved Truckers details to be provided to forwarder at the time of shipment In addition to the above, supplier should ensure to comply all IATA DG regulations, if any new requirement is added in future. ii). Bidder shall also upload the soft copy of the dispatch documents consisting of BL / AWB, Invoice, delivery note, packing list, country of origin & Test certificates and other documents as specifically indicated in the SCC in PRADAN Portal (https://hpep.bhel.com/mm) within Five days from the B/L date for sea shipment and One day from AWB date for Air shipment and sent to email ids: mssea@bhel.in, msair@bhel.in, cmmfe@bhel.in. iii) AWB/BL must contain the information of BHEL GST no., and PAN no. iv) **Air Shipments:** Bidder shall ensure the following a) Port of discharge -- Mumbai/Chennai/Hyderabad (as indicated in SCC). b) Consignee shall be BHEL, Hyderabad. Material shall be air freighted through cargo mode only and not through Courier. c) Upon handing over the cargo to the forwarder, bidder shall ensure the acknowledgement receipt with wordings" Cargo handed over in sound condition for Air freighting". Note: Warehouse receipt will not be considered for penalty calculations. d) In case of CIF/ shipments, bidder shall also inform BHEL the information about discharge port agent details and cargo arrival information within one day from the date of Shipment. e) Following dimensions of single package may be noted. i). Maximum dimension of the cargo(ODC) -- 125" x 88" x 63" ii). Maximum weight of the cargo -- 3.5 MT. If any package dimension or weight exceeds the above set limits, it will be treated as Over Dimension Cargo (ODC) or Over Weight Cargo and bidder shall inform BHEL 30 days in advance to the delivery date to enable BHEL to finalize the freight forwarder. f). If package falls under Hazardous category, bidder shall communicate BHEL 30 days in advance period with document support. v) **Sea Shipments:-** bidder shall ensure the following a). Port of discharge -- Nhavaseva/Mumbai/Chennai. b). Place of Delivery / Final Destination for CIP shipments - Nhavaseva CFS / Chennai CFS. c). In case of FOB shipments, bidder shall handover the material to BHEL nominated forwarder and obtain the cargo receipt. d). If the material cannot be containerized in 20 or 40 GP containers, an advance information of 30 days prior to the delivery date shall be communicated to BHEL for necessary arrangements and finalisation of freight forwarder. e). **For CIP shipments** 1. In case of FCL shipments, Detention free period must be 14 days. 2. Bidder shall also inform BHEL the information about discharge port agent details and cargo arrival information within 5 days from the date of Shipment. 3. No charges for the services rendered till place of destination will be payable by BHEL. Incase liner / forwarder insist for charges, not in the scope of BHEL, the same will be adjusted from bidder account. 4. In case of CIF shipments -- Bidder must select a forwarder/liner whose discharge port published tariff for THC and other services is available. Any charges over and above the published tariff will not be borne by BHEL or will be adjusted from the bidder's bill. 5. bidder must insure the cargo for 110% of material value including the freight amount. (vi). Recovery charges for non-submission of documents: - Bidder shall submit all the required documents to BHEL as prescribed in the Purchase order and NIT. If BHEL incurs any charges such as Penalty, demurrage, container detention, wharfage, storage, Ground rent etc., due to non - compliance / non - submission of documents prescribed in Purchase Order/ NIT/Letter of credit, the same shall be recovered from the bidder as under: 1. EUROPE/USA/Black Sea/ Far East/Middle East/South East sector A. **For FOB Sea Consignments:-** Penalty for late submission / negotiation of documents beyond 14 days shall be as under:		

Sl. no	Period (From Date of Bill of Lading)	Recoverable Charges	Recoverable Charges per day per container	
		LCL per week/ Break bulk cargo per day	20FT Container	40FT Container
i	Upto 14th day	Nil	Nil	Nil
ii	15th day onward	USD 10	USD 110	USD 200

B. **For CIP Sea Shipments: -**
Bidder shall provide rates for detention charges after free period at the time of offer itself in case of engagement of 20FT Container and 40FT category. In case of late presentation of documents to the bank recovery will be effected from the Bidder as per the rates quoted by the Bidder at the time of offer in this regard.
In case of Break bulk cargo and LCL, Demurrage charges shall be recovered at the rate of USD 1 per Ton per day and storage charges at the rate of USD 10 per week respectively shall be charged as late presentation charges.

(vii) Description of items in invoice, packing list, BL / AWB or LR shall be same as PO item description. Bidders shall ensure that invoice shall contain PAN nos. of both bidder and BHEL along with other tax related numbers. BHEL PAN AAACB4146P and BHEL TAN HYDB00086C Any other additional documents sought by the statutory authorities, the same shall be produced by the bidder on priority basis.
(viii) Bidder shall provide package details including number of packages, gross weight, net weight etc.

(ix) The bidder shall provide the following documents at the time of submission of offer:
a) No Business Connection in India declaration issued by the bidder as per the format specified. (or)
b) (i) No Permanent Establishment in India declaration issued by the bidder as per the format specified.
(ii) Tax Residence Certificate issued by the bidder's tax authorities.
(iii) Form 10F, as attached in Annexure V, to be issued by the bidder.
c) In case the bidder has a Business Connection in India as per Section 9 of Income Tax Act or significant economic presence in India as per rule 11 UD of IT Act or Permanent Establishment in India as per Article 5 of Double Taxation Avoidance Agreement between India and the bidder's country, the bidder shall provide a withholding tax order issued by the Indian Income Tax authority for recovery of applicable tax.

8	**Delivery Schedule**		
	The tendered goods shall be delivered within the period stipulated in NIT/ SCC as accepted. Inordinate delay/early supply are liable for rejection/Hold on payment.		**Non Deviatable**
9	**Pricing Terms**		
	Quoted price shall be inclusive of Packing & Forwarding and shall remain firm and valid during the execution of PO. Offers with PVC will be rejected outright except in cases where specifically called for in the SCC.		**Non Deviatable**
10	**PRICE VALIDITY :**		
	Unless otherwise specified, offer shall be valid for a period of 90 days from the date of bid opening (Technical bid /part-I in case of two part bid). However the prices quoted for spare parts of the Main equipment shall be kept valid for a period as specified in SCC.		**Non Deviatable**
11	**Taxes & Duties (RATE TO BE INDICATED by the bidder against the space provided)**		

			Non Deviatable
A	**Indigenous Purchase** i) Only valid GST registered bidders will be considered for the tender. The GSTIN of the bidder should be clearly mentioned in the offer. ii) If bidder is exempted from GST registration under any provision of the GST Law, a declaration with due supporting documents should be furnished for considering the offer. iii) Bidder to quote the applicable taxes in the following manner: - Harmonized System of Nomenclature (HSN) of Goods - Services Accounting Code(SAC) of Services. - IGST/CGST/SGST/UTGST: Rate of Tax to be quoted as extra in % against the space provided iv) Bidders to ensure correct applicability of IGST/CGST/SGST/UTGST based on the Inter / Intra state movement of goods/services. v) In case Bidder has opted for GST Composition Scheme, the same may be stated explicitly both in their technical and price bids. An undertaking to the effect that any change in the status of the bidder will be intimated. vi) Any other taxes & duties not covered anywhere above may be indicated separately. **Taxes deducted at source:** - TDS as per the extant statutes shall be deducted. - In case bidder does not provide PAN details, higher rate of tax shall be deducted as per the Act. - Concessional certificates, if any, should be provided well in time for lower deduction of tax.		
	Terms & Conditions to be complied 1. All invoices (incl. Credit Notes, Debit Notes) to contain BHEL HPEP GSTIN ie 36AAACB4146P1ZG. Invoices submitted should be in the format as specified under GST Law. All details as mentioned in Invoice Rules including Dealer GST registration number (GSTIN), invoice number with date of issue, quantity, rate, value, taxes with nomenclature – CGST, SGST, UGST, IGST mentioned separately, HSN Code / SAC Code etc. 2. Reimbursement of GST amount will be made only upon completion of the following: i. Bidder declaring such invoice in their GSTR-1 Return/ IFF ii. Receipt of Goods or Services and Submission of Tax invoice by BHEL iii. The tax invoice is reflected in the GSTR2B of BHEL, HPEP (buyer). Payment of GST will be made only if it is matching with data uploaded by the Bidder in GST portal. 3. In case of discrepancy in the data uploaded by the bidder in the GSTN portal vis-a-vis the tax invoice or in case of any shortages or rejection in the supply, then BHEL will not be able to avail the tax credit. The same would be available in PRADAN Portal for the bidder's information. Bidder has to rectify the data discrepancy in the GSTN portal or issue credit note or debit note (details also to be uploaded in GSTN portal) for the shortages or rejections in the supplies or additional claims for processing of such invoices. 4. In cases where invoice details have been uploaded by the bidder but failed to remit the GST amount to GST Department within stipulated time, then GST on the invoices in default will be recovered from the bidder along with the applicable interest. 5. In case GST credit is delayed/denied to BHEL due to non/delayed receipt of goods and/or tax invoice or expiry of timeline prescribed in GST law for availing such ITC, or any other reasons not attributable to BHEL, such GST amount will be recoverable from bidder along with interest levied/ leviable on BHEL. 6. GST TDS deducted as per GST Act, is uploaded in GSTN portal along GSTR7. Bidders can directly download the GST TDS Certificate from the GSTN Portal. 7. Bidders to note that Rules & Regulations pertaining to E-way bill system are to be strictly adhered to, as and when notified by Govt. authorities. 8. Vendors who fall under the E-Invoice regulations, i.e., having an annual turnover of Rs. 10 crores **(Rs 5 crore w.e.f 01.08.2023)** in the previous year shall issue e-invoice in line with Rule 48(4) of CGST Rules failing which GST amount will not be reimbursed to the vendor even if the other requirements are fulfilled. 9. In case the vendor is exempted by the GST department under the Rule 48(4) of CGST Rules from issuing E-invoice, a declaration as prescribed in the Notification 17/2022 - Central Tax dated 01-08-2022 shall be provided on the invoice. 10. Vendors who do not fall under the E-Invoice regulations, i.e., whose annual turnover is less than Rs. 10 crores **(Rs 5 crore w.e.f 01.08.2023)** in the previous year have to give an undertaking indemnifying BHEL that the vendor is not falling under the E-invoice requirement category and that in case of any breach of this E-invoicing requirement, the vendor indemnifies BHEL of any consequences that may arise due to such a breach. 11. No GST shall be levied on liquidated damages / penalty.		
B.	**Foreign Purchase (Imports)**		

	The offered price shall be inclusive of all the Taxes and duties as applicable in country of export / country of dispatch for the quoted price. Taxes deducted at source: a. In case of goods or services subject to Income tax in India, such tax as per the extant statute shall be recovered. b. In case bidder does not provide necessary documents for beneficial taxation (Refer clause 7-B-(ix) a-c of ITB), the TDS deduction shall be at the maximum percentage stipulated as per the provisions of Income Tax Act.		**Non Deviatable**
12	**Payment Terms: Unless otherwise specified in SCC, following shall be the terms of Payment.**		
A	**Indigenous:** a. Micro & Small Enterprises (MSEs) - 100% Direct EFT payment within 45 days b. Medium Enterprises - 100% Direct EFT payment within 60 days c. Non MSME Bidders - 100% direct EFT Payment within 90 Days Note A. Above due date is reckoned from the date of Receipt of material or 15 days from the date of submission of complete set of documents as per PO whichever is later. Payment will be made on acceptance of Material. B. MSEs (covered under MSME Act) need to register and renew periodically and update the same with BHEL C. The taxes that are reimbursed are limited to applicable taxes as on the Purchase Order delivery date or the amount actually paid whichever is less. D. Adherence to the above time schedule of payment is contingent upon Bidder complying with GST provisions and availment of Input Tax Credit by BHEL before the date of payment. E. In case of packaged items, 10% of supply value will be retained till completion of total supplies. F. Bidders to comply with **clause 11** on GST requirements G. MSE benefits are not applicable to Traders/Wholesalers registered as MSEs		
B	**Imports:** i) 100% payment (less Indian Agency Commission, if any) shall be through Wire Transfer with a credit period of 60 days - Cash Against Documents (CAD) ii) In case Bidder opts for Letter of Credit payment, the LC Usance period shall be 90 days with respective bank charges to respective accounts and loading of 0.50% iii) Indian Agency commission if payable and so specified in the Purchase order shall be paid in Indian Rupees, considering the SBI TT selling exchange rate, as on the date of payment after successful completion of the contract.		
C	**Conditions for LC:** a. LC validity period will be 90 days and for any extension, applicable charges will be to bidder's account. b. LC will be opened after successful completion of pre dispatch inspection prior to the scheduled / agreed delivery date. LC will be opened within 15 bank working days from the date of request.		**Non Deviatable**
D	**Conditions for both Indigenous & Foreign Bidders:** a. In case Bidders insist for lesser Credit period and BHEL accepts, a loading of 0.60% for every 15 days reduction will be applicable. b. In case PBG as required is not furnished, Payment will be released deducting the BG amount, which will be paid after expiry of warranty period against submission of supplementary claim. c. Payment does not imply in any respect whatsoever a waiver of Buyer's right to performance of the Order. Buyer is entitled to set off claimable debts against claimable liabilities with the bidder by means of a setoff Note.		**Non Deviatable**
E	Wherever EMD is applicable, the EMD will be paid back to unsuccessful bidders within fifteen days after award of the contract. Successful bidder's EMD will be retained till submission of Performance Bank Guarantee (PBG). Tender Fee wherever applicable is not refundable. No interest shall be payable by BHEL on earnest money or security deposit or any money due to the contractor by BHEL.		**Non Deviatable**

13	**Penalty clause:**		
	In the event of delay in supply /part-supply of goods, Penalty as detailed below is leviable a. Penalty of 0.5% per week or part there of shall be levied, limited to a max of 10% (ten percent) of delayed portion value / order value (as specified in SCC). b. Penalty applicable for delay in documentation is as per SCC. c. Date Reckoned for Penalty - Indigenous Orders with delivery terms FOR HPEP: C Note date. - Indigenous Orders (Others): Date of e-waybill. - Imports: For CIP/CIF Orders: IGM date - Imports: For FOB Orders: AWB / BL date - Imports: For FCA/Ex Work Orders: Date of acknowledgement from Freight Forwarder. d. In case of Deviation to above Penalty clause, loading applicable to the extent to which not agreed by Bidder. e. Timelines as mentioned in the Annexure 1 will be considered for reckoning delivery. Penalty amount so determined along with applicable GST (for Indigenous orders) thereon shall be recovered. Imposition, recovery or settlement of this penalty shall not affect BHEL's right to performance, compensation and termination of the order.		
14	**Excess materials** supplied beyond tolerance limit as specified in PO will not be paid and bidder may raise credit note for the excess/unaccepted material as per GST law.		**Non Deviatable**
15	**Rejected materials**, if any, shall be collected by the bidder within 90 days of such communication to the bidder. Beyond this period the bidder forfeits their right to the materials.		**Non Deviatable**
16	**Guarantee / Warranty Period:** Wherever required, and so provided in the specifications/SCC/Purchase Order, the bidder shall guarantee that the goods supplied shall comply with the specifications laid down, for materials, workmanship and performance. a. Guarantee period shall be 12 months from the date of commissioning or 18 months from the date of supply whichever is earlier. b. In case erection & commissioning is involved, guarantee period shall be 12 months from the date of commissioning. c. In case of equipment bought as a package which are intended to be incorporated in installations or systems, the guarantee period shall be 12 months from the date of commissioning of such equipment. The guarantee period shall be extended by the period during which the goods are not in compliance. If the delivery is found to be non-complaint, bidder shall replace, repair or re-execute the as requested by BHEL. If the bidder defaults on his obligations, buyer has the right to proceed to replace, repair or re-execute at the bidder's expense. A guarantee period as described above shall apply afresh to replaced, repaired or re-executed parts of a delivery. **Loading for deviation:** In case warranty specified in SCC is over and above the period mentioned in b & c above; loading will be 1% per annum for the deviation in warranty end period, on the contract value. Expected commissioning period is as indicated in SCC.		**Non Deviatable**
17	**PERFORMANCE BANK GUARANTEE (PBG) (Applicable in case mentioned in SCC)** In case enquiry specifically spells out PBG requirement, PBG is to be submitted by Bidder in requisite format as per Annexure VII. Further detailing on PBG as specified in SCC. The PBG shall be for the performance of the goods and shall remain binding not withstanding such variations, alterations or extensions of item as may be made, give, conceded or agreed to between the Bidder and BHEL under these Terms and conditions or otherwise.		**Non Deviatable**
NOTE: Deviations (Commercial as well as Technical) from the tender specifications and conditions are generally not acceptable. However, deviation if any, shall be brought out clearly with proper justification in the offer. The deviation, if considered by BHEL, shall be loaded for comparison, while evaluating the offer. If a bidder unconditionally withdraws any deviation before price bid opening, the same shall not be loaded. Loading criteria in respect of major commercial conditions where deviations if any are accepted shall be as per clause No.18. ***The Bidders may specifically note the following.***			
18	**Evaluation and Loading Criteria:**		

i) Evaluation Currency for this tender shall be “INR”.
ii) Evaluation of prices shall be done item-wise unless otherwise specified in the SCC.
iii) Evaluation shall be on the basis of delivered cost, i.e. “Total Cost to BHEL” w.r.t the finalized technical scope and commercial conditions (after considering incidence of applicable taxes and duties and loading).
iv) In the course of evaluation, if more than one Bidder happens to occupy L1 status, effective L1 will be decided by soliciting discounts from the respective L1 Bidders. In case more than one Bidder happens to occupy the L1 status even after soliciting discounts, the L1 Bidder shall be decided by a toss/draw of lots, in the presence of the respective L1 Bidders or their representatives. Ranking will be done accordingly. BHEL decision in such situations shall be final and binding.

INDIGENOUS
a. Bidder shall ensure to indicate the applicable taxes against each line item, failing which the same will be considered as inclusive/NIL.
b. Ex-works offers received (as against FOR Destination mentioned in enquiry) shall be loaded by 2% of Ex-works value.
c. GST and any other charges quoted will be added to the base price. However, in case input credit is available for GST (SGST, CGST/IGST), the same shall be excluded for arriving at “Total Cost to BHEL"

IMPORTS
For evaluation of offers in foreign currency, exchange rate (TT selling rate of State Bank of India) as on the date of bid opening (Part-I, in case of two-part bids) shall be considered. If the relevant day happens to be a bank holiday, then the forex rate as on the previous bank (SBI) working day shall be taken.
In case of foreign Bidders, the quoted CIP price shall be loaded by the following factors to arrive at “Total Cost to BHEL":
- Import duty as applicable on the date of Part-I bid opening.

- Loading will be as per the table below

	Ex Works	FOB/FCA	CIF/CFR	CIP
Foreign Inland freight and insurance	2%			
Marine freight and marine insurance	3%	3%		
Destination Port handling charges	0.50%	0.50%	0.50%	
clearing charges & inland freight and insurance	2%	2%	2%	2%

COMMON LOADING FOR IMPORTS & INDIGENOUS that will be added for arriving the "Total Cost to BHEL"
A. Loading on Deviated Penalty clause shall be 10% or to the extent to which the bidder has opted for deviation.
B. Loading for payment terms as per clause 12 of ITB
C. Loading for deviation in Warranty & PBG as per clause 16,17.

19 Procurement directly from the manufacturers/ suppliers shall be preferred. However, no agent shall be allowed to represent more than one manufacturer/ supplier in the same tender. Moreover, either the agent could bid on behalf of the manufacturer/ supplier or the manufacturer / supplier could bid directly but not both. In case bids are received from both from the manufacturer/ supplier and the agent, bid received from the agent shall be ignored.

20 **RIGHT OF REJECTION /NON- PLACEMENT OF PO:** BHEL reserves the right to accept or reject any or all bid/s in full or part without assigning any reason whatsoever.

21 **INTEGRITY PACT**
Bidders shall have to enter into Integrity Pact with BHEL as per Annexure VI - for Tender value of rupees two crores and above and shall be signed by the authorized signatory along with the offer, failing which Bidder’s offer will be rejected.

22 **Public Procurement**

A **Make in India**
For this Procurement, the local content to categorize a bidder as a Class I local bidder / Class II local bidder / Non-Local bidder and purchase preference to Class I local bidder, is as defined in Public Procurement (Preference to Make in India) order No P-45021/2/2017-PP(BE-II) dated 04-06-2020 issued by DPIIT as amended from time to time.
Proforma for self-certification for minimum local content and auditor’s certification is given in Annexure III.

B Any Bidder from a country which shares a land border with India will be eligible to bid in this tender only if the bidder is registered with competent authority. GOI website https://www.mea.gov.in/ to be referred for latest details of competent authority and exemptions .
Proforma for self-certification for compliance is given in Annexure IV.

C **Startups:**
For Start-ups duly registered with DPIIT (Copy of certificate to be provided), condition of prior turnover and prior experience in Public Procurement may be relaxed subject to meeting of Quality and Technical Specifications. Startups are exempt from paying EMD.

23 **Benefits earmarked for Purchase from Micro & Small Enterprises (MSEs) – Indigenous Purchase**

A All Micro and Small Enterprises (MSEs) as defined in MSE Procurement Policy are exempt from Paying EMD.
NSIC/UDYAM registered bidders shall submit NSIC/UDYAM Certificate along with bid documents. Date to be reckoned for determining the deemed validity will be the last date of Technical bid submission. Non- submission of such document will lead to consideration of their bid, at par with other bidders and MSE status of such bidders shall be shifted to Non- MSE Category till the bidder submits these documents.

B	In tender, MSEs quoting price within price band of L1+15% shall also be allowed to supply a portion of requirement by bringing down their price to L1 price in a situation where L1 price is from someone other than a MSE and such MSE shall be allowed to supply at least 25% of total tendered value. In case of more than one such MSE, the supply shall be shared proportionately. Out of these 25% minimum 3% shall be earmarked for MSEs owned by women and 6.25% for MSEs owned by SC/STs who submit the relevant documents.
C	If an enterprise falling under MSME category as defined in the Act, graduates to a higher category from its original category or beyond the purview of the Act, it shall continue to avail all non-tax benefits of its original category notified by the Ministry of Micro, Small and Medium Enterprise for a period of three years from the date of such graduation to the higher category.
D	BHEL HPEP is registered with RXIL (TReDS) platform. MSME bidders are requested to get registered with RXIL (TReDS) platform to avail the facility as per the GOI guidelines.
24	Inspection Measuring and Test Equipment (IMTE) used by the Bidder/ Contractor or sub-contractor shall be calibrated, maintained and controlled. Calibration shall be valid and IMTE maintained in sound condition during usage.
25	ISO-9001, ISO14001 & OHSMS 45001 shall be complied.
26	If BHEL registered supplier is not quoting against this NIT, supplier shall send regret letter positively with valid reasons for not participating. Repeated lack of response on the part of supplier may lead to deletion of such registered supplier from BHEL's approved supplier's list as per BHEL SEARP Guidelines.
27	**Risk Purchase clause:** In case bidder fails/delays to supply whole or part of the ordered items or supplies defective items or fails to fulfil any other terms and conditions given in Purchase Order/Contract, BHEL has the right to terminate the order/contract or withdraw balance scope of work/supply and make the purchase of such material / services from elsewhere at the risk and cost of the defaulted bidder. The bidder is liable for the additional expenditure / difference in Cost, if any, including consequential losses which BHEL may sustain by reason of risk purchase in addition to the applicable LD as per the order/contract. Non-performance of contract attracts penal provisions in line with BHEL guidelines for Suspension of Business Dealings (SBD).
28	Any other terms and conditions of the bidder attached / referred against the tender enquiry will not be considered.
29	All drawings, patterns and tools supplied by BHEL or made at BHEL's expense are BHEL's property. These cannot be used or referred to any other party and must be used only in the execution of BHEL's orders.
30	Any amount payable by the bidder under any of the conditions of this contract shall be liable to be adjusted against any amount payable to the bidder under any other work / contract awarded by BHEL HPEP or any other BHEL Units. This is without prejudice to any other action as may be deemed fit by BHEL.
31	The bids of the bidders who are on the banned list and also the bids of the bidders, who engage the services of the banned firms, will be rejected. The list of firms banned by BHEL is available on BHEL web site: www.bhel.com
32	**Ordering and confirmation of order**
	The bidder shall send the order acceptance within one week from the date of LOI/Purchase order or such other period as specified/agreed by the Buyer. Buyer reserves the right to revoke the order placed if the order confirmation differs from the original order placed. Buyer shall be legally bound, only if agreed for any deviation explicitly in writing. The acceptance of deliverables or supplies by Buyer as well as payments made in this regard shall not imply acceptance of any deviations. The Purchase order will be deemed to have been accepted if no communication to the contrary is received within one week (or the time limit as specified /agreed by the Buyer) from the date of P.O. Buyer, is at liberty to send signed P.O. through electronic media such as e-mail and the receipt of which shall be treated as receipt of order.
33	**Execution**
	The whole contract is to be executed in the most workman like manner, substantial and approved as per the contracted terms.
34	**Progress Report**
	The bidder shall render such report as to the progress of work and in such form as may be called for by the Buyer from time to time. The submission and acceptance of such reports shall not prejudice the rights of the buyer in any manner. Bidder shall communicate to BHEL immediately, the change of address, ownership, contact person(s), the mobile numbers and e-mail of the dealing person concerned. Milestones shall be periodically updated by bidder through PRADAN Portal **(https://hpep.bhel.com/mm/).** Non updation will adversely affect service rating of bidder performance.
35	**Non-disclosure Obligations**

	Drawings, technical documents or other technical information received by one party shall not without the consent of the other party, be used for any other purpose than that for which they were provided. They may not, without the consent of the submitting party, otherwise be used or copied, reproduced, transmitted or communicated to third parties. All information and data contained in general product documentation, whether in electronic or any other form, are confidential and binding only to the extent that they are by reference expressly included in the contract. The bidder shall, as per agreed date/s but not later than the date of delivery, provide free of charge any information and/or drawings which are necessary to permit the Buyer to erect, commission, operate and maintain the product. Such information and drawings shall be supplied as specified in technical specification. All intellectual properties, including designs, drawings and product information etc. exchanged during the formation and execution of the contract shall continue to be the property of the submitting party. The bidder shall provide Buyer with all information pertaining to the delivery in so far as it could be of importance to Buyer. The bidder shall not reveal confidential information to its own employees not involved with the tender/contract and its execution and delivery or to third parties, unless Buyer has agreed to this in writing beforehand. The bidder shall not be entitled to use the Buyer's name in advertisements and other commercial publications including website without prior written permission from Buyer. In the event of violation of the confidentiality as agreed, BHEL will take legal action as deemed fit. Non-disclosure agreement to be entered as per **Annexure- II** wherever applicable.

36	**Inspection and Testing**
A	The goods and stores shall be manufactured by approved quality system and each part/component may be inspected and tested by the Buyer prior to shipment and shall comply with relevant requirements. Buyer has the right to inspect at any stage during manufacture/ delivery.
B	Buyer or his authorized representative shall be entitled at all reasonable times during execution to inspect, examine and test at the bidder's premises the material and workmanship of all stores to be supplied under the contract, and if the part of the stores are being manufactured at other premises, the bidder shall obtain for buyer or his authorized representative permission to inspect, examine and test as if the said stores are being manufactured at the bidder's premises. Such inspection, examination and testing, if made shall not release the bidder from any obligation under the contract. For indigenous bidders all costs related to first inspection request shall be borne by the buyer and the cost of subsequent inspections due to non-readiness of material/rework/ rejections shall be borne by the bidder. In case of imports all inspection charges including third party inspections if any shall be borne by the bidder. The cost of inspection staff/third party specified by the Buyer shall be borne by bidder unless otherwise specifically agreed. If the contract provides for tests on the premises of the bidder or any of his sub-contractor/s, bidder shall be responsible to provide such assistance, labor, materials, electricity, fuels, stores, apparatus, instruments as may be required and as may be reasonably demanded to carry out such tests efficiently. Cost of any type test or such other special tests shall be borne by the bidder unless otherwise specifically agreed in the contract. The Bidder shall give the authorized representative of the buyer reasonable notice in writing of the date on and the place at which any stores will be ready for inspection/ testing as provided in the Contract. Annexure – I, may strictly be complied with for the time lines. Any delay in submission of the documents by the bidder will not alter the delivery date.
37	**Quality and Condition of the Deliverables**
	The bidder shall be responsible for compliance with applicable technical, safety, quality, environmental requirements and other regulations in relation to products, packaging and raw and ancillary materials.
38	**Packaging and Dispatch**
	The bidder shall package the deliverables safely and carefully and pack them suitably in all respects considering the peculiarity of the material for normal safe transport by sea/air/rail/road to its destination suitably protected against loss, damage, corrosion in transit and the effect or tropical salt laden atmosphere. The packages shall be provided with fixtures/hooks and sling marks as may be required for easy and safe handling by mechanical means. Special packaging conditions/ environmental conditions as defined in the NIT shall be fully complied. Each package must be marked with consignee name, address, P.O. number, Package Number, gross weight & net weight, dimensions (Lx B x H) and bidder's name. The packing shall allow for easy removal and checking of goods on receipt and comply with carrier's conditions of packing or established trade practices. Packing list for goods inside each package with P.O. item No. & quantity must also be fixed securely outside the box to indicate the contents. If any consignment needs special handling instruction, the same shall be clearly marked with standard symbols/instructions. Hazardous material should be notified as such and their packing, transportation and other protection must conform to relevant regulations.
39	**Contract variations; Increase or decrease in the scope of supply**
	Buyer may vary the contracted scope during execution due to exigencies of project requirement. If the bidder is of the opinion that the variation has an effect on the agreed price or delivery period, Buyer shall be informed of this immediately in writing along with technical details, and in the event of additional work, submit a quotation with regards to the price and period involved, as well as the effect this additional work will have on the other work to be performed by the bidder. Wherever unit rates are available in the contract, the same shall be applied to such additional work. The bidder shall not perform additional work before buyer has issued written instructions/amendment to the purchase order to that effect. The work which the bidder should have or could have anticipated in terms of delivering the service (s) and functionality (ies) as described in this agreement should be executed by the bidder without any price implication. In case of no change in the scope / technical specifications, bidder shall endeavor to keep the material ready and intimate the same to BHEL within the contractual delivery date, failing which, the delay if any will be attributed to supplier, and any upward price variation thereof for delivery at a later date is not admissible.
40	**Rejected/Short shipments/ warranty/guarantee replacements**
	In case of any short shipment during initial supply which is subsequently dispatched by the bidder or any guarantee / warranty replacements shall be dispatched on "DDP-Delivered duty paid BHEL stores" basis for imported items and "FOR-BHEL Stores/designated destination" basis for indigenous items.
41	**Export Administration Regulations**
	If a delivery includes such technology and / or supply that is subjected to the export regulations the bidder shall obtain due permissions, approvals, license etc.
42	**Force Majeure**

	The bidder shall not be considered in default if delay occurs due to causes beyond their control such as Acts of God, Natural calamities, Fire, Frost, Flood, Civil War, civil commotion, riot, Government Restrictions. Only those causes that have duration of more than seven days shall be considered cause of force majeure. Notification to this effect duly certified by local chamber of commerce/statutory authorities with supporting documents shall be given by the bidder to BHEL by registered letter/courier service immediately without loss of time. In the event of delay due to such causes the delivery schedule shall be extended for a length of time equal to the period of Force Majeure or at the option of BHEL the order may be cancelled. Such cancellation would be without any liability whatsoever on the part of BHEL. In the event of such cancellation the bidder shall refund any amount advanced or paid to the bidder by BHEL and deliver back any material issued to him by BHEL and release facilities, if any provided by BHEL.
43	**Non-waiver of Defaults**
	If any individual provision of the contract is invalid, the other provisions shall not be affected.
44	**Settlement of Disputes**
	Except as otherwise specifically provided in the contract, all disputes concerning questions of the facts arising under the contract, shall be decided by the Buyer, subject to written appeal by the bidder to the buyer, whose decision shall be final. Any disputes of differences shall to the extent possible be settled amicably between the parties thereto, failing which the disputed issues shall be settled through arbitration The bidder shall continue to perform the contract, pending settlement of disputes(s).
45	**Conciliation clause**
	CONCILIATION CLAUSE FOR CONDUCTING CONCILIATION PROCEEDINGS UNDER THE BHEL CONCILIATION SCHEME, 2018: The Parties agree that if at any time (whether before, during or after the arbitral or judicial proceedings), any Disputes (which term shall mean and include any dispute, difference, question or disagreement arising in connection with construction, meaning, operation, effect, interpretation or breach of the agreement, contract or the Memorandum of Understanding, penalty deduction, time extension), which the Parties are unable to settle mutually, arise inter-se the Parties, the same may, be referred by either party to Conciliation to be conducted through Independent Experts Committee to be appointed by competent authority of BHEL from the BHEL Panel of Conciliators. The proceedings of Conciliation shall broadly be governed by Part-III of the Arbitration and Conciliation Act 1996 or any statutory modification thereof and as provided in Procedure in http://www.bhel.com/index.php/story_details?story=2454 . The Procedure together with its Formats will be treated as if the same is part and parcel hereof and shall be as effectual as if set out herein in this ITB
46	**ARBITRATION (WITH SOLE ARBITRATOR)**
	Except as provided elsewhere in this Contract, in case amicable settlement is not reached between the Parties, in respect of any dispute or difference; arising out of the formation, breach, termination, penalty deduction, validity or execution of the Contract; time extension, or, the respective rights and liabilities of the Parties; or, in relation to interpretation of any provision of the Contract; or, in any manner touching upon the Contract, then, either Party may, by a notice in writing to the other Party refer such dispute or difference to the sole arbitration . Sole arbitrator to be appointed by Head of the Unit - BHEL , HPEP .
	The Arbitrator shall pass a reasoned award and the award of the Arbitrator shall be final and binding upon the Parties.
	Subject as aforesaid, the provisions of Arbitration and Conciliation Act 1996 (India) or statutory modifications or re-enactments thereof and the rules made thereunder and for the time being in force shall apply to the arbitration proceedings under this clause. The seat of arbitration shall be Sangareddy / Hyderabad, Telangana. The language of arbitration shall be English and the documents shall be submitted in English.
	The cost of arbitration shall initially be borne equally by the Parties subject to the final apportionment of the cost of the arbitration in the award of the Arbitrator.
	Subject to the arbitration in terms of clause 45, the courts at Sangareddy, Telangana State shall have exclusive jurisdiction over any matter arising out of or in connection with this contract. Notwithstanding the existence or any dispute or differences and/or reference for the arbitration, the Contractor shall proceed with and continue without hindrance the performance of its obligations under this Contract with due diligence and expedition in a professional manner except where the Contract has been terminated by either Party in terms of this Contract.
	ARBITRATION FOR CONTRACT WITH PUBLIC SECTOR ENTERPRISE (PSE) OR A GOVERNMENT DEPARTMENT
	In the event of any dispute or difference relating to the interpretation and application of the provisions of commercial contract(s) between Central Public Sector Enterprises (CPSEs/ Port Trusts inter se and also between CPSEs and Government Departments/Organizations (excluding disputes concerning Railways, Income Tax, Customs & Excise Departments), such dispute or difference shall be taken up by either party for resolution through AMRCD as mentioned in DPE 0M No 4(1)/2013-DPE(GM/FTS 1835 dated 22-05-2018
47	**Applicable Laws and jurisdiction of Courts**
	This agreement shall be construed and interpreted in accordance with the laws of India and shall have exclusive jurisdiction of Sangareddy/Hyderabad courts, Telangana, India.
48	**BHEL-Fraud prevention policy shall be adhered to.**
	The Bidder along with its associate/ Collaborators/ Sub-contractors/ sub-bidders/ consultants/ service providers shall strictly adhere to BHEL Fraud Prevention policy displayed on BHEL Website http://www.bhel.com and shall immediately bring to the notice of BHEL management about any fraud or suspected fraud as soon as it comes to their notice. List of nodal officers is hosted on BHEL Hyderabad website https://hpep.bhel.com/.
49	**Suspected Cartel Formation**
	The Bidder declares that they will not enter into any illegal or undisclosed agreement or understanding, whether formal or informal with other Bidder(s). This applies in particular to prices, specifications, certifications, subsidiary contracts, submission or non-submission of bids or any other actions to restrict competitiveness or to introduce cartelization in the bidding process. In case , the Bidder is found having indulged in above activities, suitable action shall be taken by BHEL as per extant policies / guidelines .
50	**Conflict of Interest:** "A bidder shall not have conflict of interest with other bidders. Such conflict of interest can lead to anti-competitive practices to the detriment of Procuring Entity's interests. The bidder found to have a conflict of interest shall be disqualified. A bidder may be considered to have a conflict of interest with one or more parties in this bidding process, if:

	a) they have controlling partner (s) in common; or b) they receive or have received any direct or indirect subsidy/ financial stake from any of them; or c) they have the same legal representative/agent for purposes of this bid; or d) they have relationship with each other, directly or through common third parties, that puts them in a position to have access to information about or influence on the bid of another Bidder; or e) Bidder participates in more than one bid in this bidding process. Participation by a Bidder in more than one Bid will result in the disqualification of all bids in which the parties are involved. However, this does not limit the inclusion of the components/ sub-assembly/ Assemblies from. one bidding manufacturer in more than one bid; or f) In cases of agents quoting in offshore procurements, on behalf of their principal manufacturers, one agent cannot represent two manufacturers or quote on their behalf in a particular tender enquiry. One manufacturer can also authorize only one agent/dealer. There can be only one bid from the following: 1. The principal manufacturer directly or through one Indian agent on his behalf; and 2. Indian/foreign agent on behalf of only one principal; or g) A Bidder or any of its affiliates participated as a consultant in the preparation of the design or technical specifications of the contract that is the subject of the Bid; or h) In case of a holding company having more than one independently manufacturing units, or more than one unit having common business ownership/management, only one unit should quote. Similar restrictions would apply to closely related sister companies. Bidders must proactively declare such sister/ common business/ management units in same/ similar line of business. "

Note: Purchase officer has to fill Annexure-I while sending enquiry

(Attachment to Rate Contract					
Special Conditions of Contract (SCC) Rev 01					
Sl.No	**ITB Clause No.**	**Clause**	**Available Options**	**BHEL requirements**	**Bidder response**
1	3	Mode of Submission	Conventional / E-Procurement	Conventional (Email)	
2	5	Type of Bid	Single part / Two Part / Three Part	Two Part	
3	6	Indigenous purchase - Destination	BHEL, RCPuram, Hyderabad / Site	Site Projects	
4			Destination in case of Site	Site Projects	
		Mode of Shipment	Air / Sea	Road/Sea	
5		Imports purchase - Destination	Mumbai / Navasheva / Hyderabad / Others	NA	
6		Freight	Customer / BHEL / Vendor	Vendor	
7		Insurance	Customer / BHEL / Vendor	BHEL	
8		**Basic Custom Duty**	Project Imports/ Concessional Duty / Merit Duty / Nil / Others _____Duty Structure	NA	
9	9	Price validity	_____ days	180 Days	
		Optional Spares price validity	_____ Months / years from the date of _____	As per tender documents	
10	8	Delivery Period	___ weeks / ___ Months (Staggered delivery to be detailed)	As per tender documents	
11	18	Evaluation basis	Itemwise / Total	Total (Overall L1)	
12	Others	Quantity Split	Splittable / Non-Splittable	Non-Splittable	
13			(Tabulation for splitting to be detailed)	Not applicable	
14	9	Price Variation Clauser (PVC)	Applicable / Not applicable	Not applicable	
15	12	Payments Terms	As per ITB13	Applicable	
16		Tender cost	Applicable / Not applicable	Not applicable	
17		Earnest Money Deposit (EMD)	__% of tender value / Not applicable	Not applicable	
18		E & C Supervision Charges	Applicable / Not applicable	Not applicable	
19	Others	Contract execution Bank Guarantee	__% of PO Value to be submitted after receipt of PO / Not Applicable	Not applicable	
20	17	Performance Bank Guarantee		Not applicable	
	7	Additional documentation for payment	Test / Warranty / Guaranty / O&M Manual etc.,	As per tender documents	
21	13	Max Penalty applicable on	Delayed portion / Order value	As per tender documents	
22	Others	Contract Specific Penalty Clause	including Documentation delay , Performance , E&C etc., to be detailed , considering Project , Unit , Set , etc.,	As per tender documents/Technical specification	
23	16	Guarantee / Warranty Period	Applicable Clause a/b/c	As per tender documents	
24		Contract Specific Guarantee / Warranty Period	Specific period if any to be detailed	As per tender documents	
25	Others	Customer approval of vendor	Applicable / Not applicable	Applicable	
26		Drawing approval	Applicable / Not applicable	Applicable	
27		QAP approval	Applicable / Not applicable	Applicable	
28	36	Inspection by	BHEL / BHEL TPI / Vendor TPI / Customer	Applicable	
29	Others	Financial / Commercial PQC	Applicable / Not applicable	Applicable	
30			if Applicable to be detailed	As per tender documents	

Note:

In case any BHEL requirement is not mentioned/specified above, that will be as per BHEL tender documents.

Letter head of Company (<Rs. 10 Cr value)

Ref. ……. Date …….

To

Bharat Heavy Electricals Limited
HPEP, Hyderabad-502032

Subject: - Certification regarding local content

Reference: Tender Enquiry No-……

Name of item(s): …….

Dear Sir,

We hereby certify that the quoted items offered by us against Enquiry No …….. is having local content of ……..%.

Further, to certify that the local content % certified above is in line with definition of Local content given in point no 2 of Public Procurement (Preference to Make in India), Order 2017 and we qualify as……. (Class-I/ CLASS-II/ Non-Local supplier - fill in one which is applicable) local supplier.

We further confirm that details of location at which the local value addition is made will be at …… (address of the works).

The above declaration does not include services such as transportation, insurance, installation, commissioning, training and after sales service support like AME/CMC etc. as local value addition.

We also understand, false declarations will be in breach of the Code of Integrity under Rule 175(1) (i) (h) of the General Finance Rules for which a bidder or its successors can be debarred for up to two years as per Rule 151 (iii) of the General Finance Rules along with such other actions as may be permissible under law.

I hereby declare that the details furnished above are true and correct to the best of my knowledge and belief, and I undertake to inform you of any changes therein, immediately. In case any of the above information is found to be false or untrue or misleading or misrepresenting, I am aware that I may be held liable for it.

Yours very truly,

……. (authorized signatory of company with seal)
…… (firm name)
Authorized signatory of
company

		BHARAT HEAVY ELECTRICALS LIMITED **HEAVY POWER EQUIPMENT PLANT** **PURCHASE DEPARTMENT/PUMPS** **RAMACHANDRAPURAM, HYDERABAD**				**Project: RATE CONTRACT FOR VARIOUS PROJECTS** **Enquiry:F6/RC/24-26/CVPFW/1**	
Sl.No	Material Code	Material Description	BHEL Drawing/ Spec. - Var.	Quantity	MU	Unit Rate without GST	Total Cost
1	FP9750702018	SUCTION FORMWORK FOR CV PUMP	FP50702-1	19.000	EA		
2	FP9750702026	DISCHARGE FORMWORK FOR CV PUMP	FP50702-2	19.000	EA		
		GST Amount					
		Total Cost with GST					

SL NO	ANNEXURE C FOR TERMS AND CONDITIONS	SUPPLIER COMMENTS:REQUESTED TO OFFER EITHER CONFIRMED OR ACCEPTED OR REMARKS IF ANY DEVIATION IS TAKEN
1	Terms of Delivery and location:FOR Destination:Destination for material is RESPECTIVE SITE (Cost, Packing, Forwarding ,Freight etc., are in Supplier's scope i.e. included in the quoted prices.Transit Insurance in BHEL Scope), non acceptance of terms of delivery is laible to rejection.Evaluation will be done on grand total Package	Non-Devaitable
2	Quoted currency should be in Indian Rupee(INR) only.	
3	Delivery Period:To mention clearly the exact delivery period from date of approved drawing or QAP whichever occurs later. Any delay in submission of documents and approval from BHEL/Customer will be calculated as per Annexure-I	
4	Terms of payment:As per ITB13	Non Devaitable
5	Clientele List: Supplier to submit detailed clientele list with their full address including detail of contact person with phone no., fax no. &	
6	Guarantee Certificate :As per Technical Specification/ITB13	
7	Warranty shall be as per technical specification	
8	Inspection before despatch: Inspection before despatch at supplier's works by BHEL / BHEL appointed .Inspection agency / Customer / Customer appointed inspection agency.	
9	Firm Price: Prices shall be kept firm till completion of supplies and acceptance of materials at BHELProject Sites/Stores.	
10	MSE / Non MSE Status with support documents.	
11	Contact details of bidders: Contact persons Name/Designation/Mobile No/Email ID/Fax No/Phone No.etc.	
12	Pointwise conformation/acceptance or comments to our technical specification is must and Each page shall be signed BY THE BIDDER	
13	Risk Purchase Clause:Supplier Confirmation is Required.Non acceptance to risk purchase clause may leads to rejection of offer.Hence bidders are requested to accept risk purchase clause	
14	In case of ambiguity between Customer/BHEL specification, Please take the confirmation before technical bid opening.	
15	Vendor shall duly filled and submit the MII local content delcaration form as given in the tender.	
16	Vendor shall duly filled and submit the eligibility criteria form as given in the tender.	
17	Rate contract is valid for the PO placement within rate contract period (02 years from the date of finalisation of Rate Contract)	
18	For any technical query please mail to tulsikoneti@bhel.in, nandgopal@bhel.in,devasari@bhel.in	