COPYRIGHT AND CONFIDENTIAL
The information on this document is the property of BHARAT HEAVY ELECTRICALS LIMITED,
It must not be used directly or indirectly in any way detrimental to the interest of the company.

JOB SPECIFICATION OF DM POLISHNG UNIT AND SSF

PROJECT : **1 x 51MW COMBINED CYCLE CAPTIVE POWER PLANT PROJECT, HAZIRA, GUJARAT.**

CUSTOMER: **OIL AND NATURAL GAS CORPORATION LTD. HAZIRA, GUJARAT.**

CONSULTANT: **FICHTNER CONSULTING ENGINEERS (INDIA) PVT. LTD., BANGALORE**

OPYRIGHT AND CONFIDENTIAL
The information on this document is the property of BHARAT HEAVY ELECTRICALS LIMITED .
It must not be used directly or indirectly in any way detrimental to the interest of the company.

C O N T E N T S

Section No.	Description	Page No.
I	GENERAL	3
II	DETAILED TECHNICAL SPECIFICATION	14
III	PRICE SCHEDULE	28
IV	TENDER DRAWINGS/DOCUMENTS	34
V	RECORD OF REVISION	35

OPYRIGHT AND CONFIDENTIAL
The information on this document is the property of BHARAT HEAVY ELECTRICALS LIMITED.
It must not be used directly or indirectly in any way detrimental to the interest of the company.

SECTION-I

GENERAL

1.1. BRIEF SYSTEM DESCRIPTION

1. There is a DM plant existing in ONGC Hazira, HRSG existing area. Bidder scope shall start from taking a tapping from the existing DM water line. It is proposed to install a new 2 x 100% Mixed Bed and associated facilities in existing DM plant area. This polished water shall be used as make up water for 1 x 51 MW CCPP, ONGC Hazira project.

2. 2 x 50% Side Stream Filters (SSF) shall be provided to filter 3% of the total circulating water flow of 6600 m^3/hr. along with SSF backwash pumps and blowers. Clarified water required for backwash shall be tapped from 1000 m^3 CT make up water storage tank with the help of SSF backwash water pump. SSF backwash waste water shall be collected in CT drain cum SSF backwash pit from where it shall be pumped to the existing OWS system network. The treated water from SSF shall be discharged to the CW pump sump.

1.2. PROJECT INFORMATION

Project : 1 x 51MW Combined cycle captive power plant at ONGC HAZIRA plant

Site Location

State	: GUJARAT
Nearest town	: SURAT
Nearest Railway Station	: SURAT
Nearest Airport	: SURAT
Nearest Harbour	: Magdalla, 20 KM
Access Road	: NH-8 (30 KM)

1.3. ORDER OF PRECEDENCE

This specification shall be read in conjunction with all other specifications and documents enclosed to it. Any conflict between referenced documents shall be identified and indicated. When resolving conflicts the following order of precedence shall govern.
(1) Job specifications (PEMC-06165 Rev.01)
(2) P&ID's referred
(3) Annexures
(4) Standard specifications (PY-51199 R00)
(5) Standards and codes as applicable

OPYRIGHT AND CONFIDENTIAL
The information on this document is the property of BHARAT HEAVY ELECTRICALS LIMITED.
It must not be used directly or indirectly in any way detrimental to the interest of the company.

1.4. BRIEF SCOPE OF WORK

a) Mechanical

This specification is intended to cover the design, engineering, manufacture, fabrication, assembly, testing at manufacturer's works, delivery properly packed for transport, inland transportation up to site, unloading, storage at site, in-plant transportation, complete services of erection, testing (including performance test) and commissioning, complete with all accessories as specified hereinafter and as required for safe and trouble free operation and maintenance of DM Polishing Units (Mixed Bed) and SSF units as per this Job specification and its annexure.

Brief scope of supply shall consist of

1. DM Polishing Units (Mixed bed and its associated auxiliaries)
   - 2 x 100% (1W+1S) Mixed Bed
   - 1 x 100% Acid Dosing Tank
   - 1 x 100% Caustic Dosing Tank
   - 1 x 100% pH correction dosing system with 1 no. of pH correction dosing tank, agitator and 2 x 100% pH correction dosing pumps
   - DM water piping from Mixed Bed outlet to inlet of intermediate DM water storage tank along with pipe fittings, instruments shown in P&ID.
   - 2 x 100% air scouring blowers
   - 2 x 100% Regeneration pumps
   - Piping, valves, fittings, instruments etc.
   - Local starter cum control panel shall be supplied for electrical and control of MB unit.
2. Side stream filters (SSF) unit
   - 2 x 50% side stream filters of 100 m^3/hr. each.
   - 2 x 100% air scouring blowers
   - 2 x 100% SSF backwash water pumps of suitable capacity
   - Piping, valves, fittings, instruments etc.

<u>Miscellaneous items:</u>

3. Eye wash and safety shower as per enclosed sketch - 3 nos.
4. Service water tank of 5 m^3 capacity (MOC- HDPE/FRP) including level gauges, switches and required accessories/fittings for mounting these instruments on the tank as shown in the P&ID.
5. Potable water tank of 5 m^3 capacity (MOC- HDPE/FRP) including level gauges, switches and required accessories/fittings for mounting these instruments on the tank as shown in the P&ID.
6. One no. UV sterilizer of 5m3/hr capacity shall be provided for potable water system including required accessories/fittings for mounting it on a 1" GI pipe.
7. One no. pH analyser at the outlet of DM water storage tank fill pumps along with root valve as indicated in the P&ID.

OPYRIGHT AND CONFIDENTIAL
The information on this document is the property of BHARAT HEAVY ELECTRICALS LIMITED.
It must not be used directly or indirectly in any way detrimental to the interest of the company.

b) Civil

For MB Unit and its associated system, SSF Unit and its associated system, Eye wash and safety shower, all the required civil design and civil work (including equipment foundation) will be in the scope of BHEL. However, necessary civil input shall be provided by bidder to enable BHEL to do civil design and release civil drawings to site.

Bidder shall supply all foundation bolts, embedment (of non-corroding materials suitable for acid/alkali/chemicals), levelling plates/shims and grout material required for grouting of equipment.

c) Control & Instrumentation

i) All field instrumentation as per enclosed P&IDs. Any other additional instrumentation required for completeness of the system shall also be provided.

ii) All instrument hook-up material for installation of instruments shall be supplied by bidder.

iii) Refer specification PEIC- 4202 for Instrumentation and Control for package.

iv) One local control panel shall be provided only for mixed bed unit operation, which shall be located near existing DM plant.
- The local control panel shall contain all instrumentation control devices, monitoring devices, as well as all operator interfaces, such as indicators, hand switches, light and control switches, motor starters, and alarms.
- The local control panel shall contain all necessary control system hardware / modules.
- Each control cabinet shall, where applicable, consist of an enclosure, control and monitoring devices, alarm horn, indicating lights, interior lighting, duplex receptacles, equipment and instrument ground buses, terminal blocks, wiring, fuses (or circuit breakers), fuse holders, etc. Panel configuration shall be as per CONTRACTOR's standard, unless otherwise specified herein.
- Shield components against electrical noise, RF interference, and heat state limitations.
- Each device mounted on or within a panel shall have a nameplate and be tagged in accordance with the CONTRACTOR's standard practice, subject to OWNER approval.

v) Local control panel is not applicable for SSF.

d) Electrical

i. The MB unit shall be supplied with a local distribution panel for which redundant supply from BHEL MCC shall be provided. The power supply to all the individual loads / drives shall be derived from this distribution panel. Bidder scope shall include the supply of all power and control cables. The panel shall have the following features:

OPYRIGHT AND CONFIDENTIAL
The information on this document is the property of BHARAT HEAVY ELECTRICALS LIMITED .
It must not be used directly or indirectly in any way detrimental to the interest of the company.

- Local panel shall have modular design with Form-3B construction.
- Gland and Lugs shall be provided for termination in the local panel.
- The local panel shall be weatherproof with minimum IP 55 protection.
- In switchgear for Motor feeders rated 15kW & above an ammeter & transducer shall be provided. All transducers will be of dual output type.
- Motor feeders shall be provided with switch fuse unit, contactor, overload relay & single phase prevention relay. Components of Motor feeders shall follow Type-2 coordination. Also, ELCB shall be provided for all motor up to 5.5kW. Above 5.5 kW CBCT with ELR shall be provided.
- 20% spare feeders of each rating shall be provided in Local panel.
- The panel shall have fault level of 50kA for 1 sec.
- Control supply for motor contactors shall be derived in Panels using control transformer on each bus. Control voltage of contactors will be 110 V AC.
- For panel lighting and space heater, tap 240V supply before the incomers.

Note: Local starter cum control panel shall be supplied for electrical and instrumentation control of MB plant only.

ii. All AC motors required for the successful operation of the plant with specific cable glands & lugs. The motor along with driven equipment shall be with common Base plate, coupling, coupling guard, anchor bolts and nuts, etc.

iii. Glands and lugs for power cable, control cable, Space heater cable and earthing cable (if any) suitable at motor end has to be supplied along with the main equipment. Glands shall be Flame proof/weather proof (as per motor category) double compression type Nickel plated Brass (ET) shall be provided with back nut and PVC shroud.

iv. Cables Lugs shall be tinned copper heavy duty lug.

v. Cable dimensions shall be furnished during detail engineering, accordingly glands, lugs shall be supplied.

vi. Vendor list for cable package shall be as per approved vendor list.

vii. Type Tests and Special tests to be conducted/Valid Certificates to be submitted shall be governed by below clauses. If Type tests certificates and Special Tests Certificates (applicable for UV test, Accelerated water absorption test, Dielectric retention test) are not available for any size of cable, same shall be conducted by vendor at his own cost in any recognized laboratory. The reports shall be submitted for BHEL's approval before dispatch of the cables. There shall not be any delivery and commercial implications on account of this.

viii. Vendor shall provide local distribution panel along with power and control cable from the panel to individual drives.

ix. Cable trays within the proposed MB unit area.

x. Earthing of all electrical equipment within the MB & SSF unit area. All above ground equipment earthing shall be connected to the Purchaser's main earthing grid. Only earth risers shall be provided by BHEL at two places near the MB & SSF unit area. Supply and erection of earthing materials within MB & SSF unit area shall be by bidder.

xi. All power and control cables between Bidder's supplied equipment.

xii. Power, control and signal cable trays with necessary accessories shall be supplied by the bidder.

OPYRIGHT AND CONFIDENTIAL
The information on this document is the property of BHARAT HEAVY ELECTRICALS LIMITED .
It must not be used directly or indirectly in any way detrimental to the interest of the company.

xiii. Bidder shall supply all erection hardware as required for equipment.

xiv. The reports shall be submitted for BHEL's approval before dispatch of the cables.

1. Cable sizing calculations.
2. Data sheet of Cables, Glands, lugs for approval.

1.5. ERECTION AND COMMISSIONING SPARES

The Bidder shall also supply erection & commissioning spares along with his main equipment as per his experience, for replacement of damaged or unserviceable ones during the execution of the project at site, to avoid delay in the project schedule. This shall form part of the main equipment supply. Bidder shall provide list of erection and commissioning spares along with the offer.

1.6. SPECIAL MAINTENANCE TOOLS AND TACKLES

One set of special tools and tackles required for operation, maintenance, inspection and repair, neatly packed in steel boxes complete with operating instructions for the complete system shall form part of the main equipment supply and a separate list for the same shall be furnished along with bid.

1.7. MANDATORY SPARES

For Mandatory Spares refer LIST as indicated in detail specification section. Bidder has to quote separately for Mandatory spares.

1.8. RECOMMENDED SPARES

A minimum requirement of spare parts based on the experience of the Bidder sufficient for two (2) years of normal trouble free operation shall be recommended and quoted separately as optional item. Bidder shall furnish the description along with recommended quantity for each item in the offer.

1.9. SPECIAL CLEANING, PROTECTION & PAINTING

Refer Annexure- for surface preparation and painting attached with this specification.

1.10. CHEMICALS

The chemicals (acid / alkali / amine) required for double regeneration of MB unit and pH dosing for start-up and commissioning (72hrs) of the system are to be supplied by the Bidder.

1.11. TERMINAL POINTS

The terminal points are clearly marked on the P&ID and also refer the layout for the piping length from the terminal point to the equipment area.

OPYRIGHT AND CONFIDENTIAL
The information on this document is the property of BHARAT HEAVY ELECTRICALS LIMITED.
It must not be used directly or indirectly in any way detrimental to the interest of the company.

For MB unit: The counter flanges, fittings, nuts, bolts and gaskets at the battery limit are in the scope of supply of the Bidder.

a) DM water at existing DM water header for MB inlet
b) MB unit outlet up to the inlet of intermediate tank
c) Existing acid tank/line header for acid dosing tank
d) Existing alkali tank/line header for alkali dosing tank
e) Regeneration pumps supply from intermediate tank nozzle.
f) Regeneration waste into existing N-pit.

For SSF unit: The counter flanges, fittings, nuts, bolts and gaskets at the battery limit are in the scope of supply of the Bidder.

a) Tap off from CW pump discharge header for SSF inlet line.
b) SSF treated water to CT pump sump.
c) Clarified water for SSF Backwash at CT makeup tank outlet line.
d) SSF back wash waste water to SSF backwash and CT drain pit.

1.12. DOCUMENTS TO BE FURNISHED

a) Along with the offer

Bidders is requested to fill and furnish the Checklist for the offer enclosed to PEMC-6165 and also submit the following:

- P&ID
- General arrangement drawing with maintenance space.
- All the filled in Annexure of PY 51199
- Duly filled in unpriced price bid format.

b) After award of contract

All the drawings and documents to be submitted as per the Master Document List enclosed with PEMC-06165.

Also submit the following documents during detail engineering

- Equipment list with skid P&ID.
- Commissioning manuals.
- O&M manual with product catalogue of all bought out items.
- Spares list and ordering information.

1.13. PERFORMANCE TEST REQUIREMENTS & GUARANTEES

In addition to compliance with the requirements of the Specification, Supplier shall meet the specific guarantees of performance as required and as stated in the Schedule of Guaranteed Data. All tests shall be carried out in accordance with the relevant international standards, unless otherwise specified or approved by Owner/Owner's representative.

a) The Complete Water treatment plant & its auxiliaries shall operate safely, reliably, and without undue maintenance or operator attention/intervention. Guarantees shall

OPYRIGHT AND CONFIDENTIAL
The information on this document is the property of BHARAT HEAVY ELECTRICALS LIMITED .
It must not be used directly or indirectly in any way detrimental to the interest of the company.

be such that, it can be met in everyday operation under all specified operating conditions. All guarantee figures shall be realizable in everyday operation under all anticipated operating conditions.

b) Supplier shall note the provisions of the clauses on tests as outlined in the specification for "Inspection and Testing".

c) Performance test will be carried out within the appropriate time period as specified. The performance test result of the water treatment plant & its auxiliaries shall be corrected to the design conditions to establish an "as new and clean" performance.

d) Guarantee Test Procedure

In conducting the plant performance tests, the plant shall be operated by Owner/Owner's representative's staff under the direction and responsibility of Supplier's representative and to the mutual satisfaction of the parties concerned, but under the general supervision of Supplier.

e) MB units:

i. Supplier shall submit the design calculations for arriving at the required quantity of resin for each exchanger, supported by resin characteristic data used in the calculations, in line with manufacturer's / best engineering practices. Supplier shall take into account derating factor of 10% while deciding the useful quantity of resin. A derating factor of 30% shall be considered for resin used for MB unit. After including the above margins and other additions such as minimum resin quantity, the chemical consumption shall be calculated. The quantity of resin and regeneration chemical consumption shall be as per the "Guaranteed Data".

ii. Before commencement of tests, Supplier may if so desired by him, bring the MB resins to the fully regenerated condition by carrying out double regeneration, that is, two consecutive regenerations. No other double regeneration will be permitted during the capacity test period.

iii. Minimum six (6) runs shall be carried out for establishing the guaranteed values of treated water with regard to quality (stage wise) and capacity as well as for establishing the guaranteed values for chemical consumption, continuous power consumption etc. Of these six test runs, a minimum of three (3) consecutive test results shall meet the guaranteed values. For Mixed Bed, a minimum of (3) three test runs shall be conducted and all the results shall meet the guaranteed values.

1.14. SUBMISSION OF TEST PROCEDURES

The Supplier shall submit for approval at least one month prior to testing, detailed test procedures for equipment, sub-systems and complete systems covered under this Order. These procedures shall include details of all performance tests either conducted in the manufacturer's works or at site. Detailed lists shall be provided which shall specify applicable codes, functional and other tests to be carried out on each item of equipment, each sub-system and each complete system. The lists shall be supplemented with logic diagram to show the correct plant functioning requirements together with system flow diagrams showing all points of measurement for both functional and performance tests.
The procedures, lists, logic diagrams and flow diagrams together with test results shall be correlated and presented as a single bound document to form a comprehensive set of test procedures and records of the tests conducted on the plant.

OPYRIGHT AND CONFIDENTIAL
The information on this document is the property of BHARAT HEAVY ELECTRICALS LIMITED .
It must not be used directly or indirectly in any way detrimental to the interest of the company.

1.15. SUB VENDOR LIST

Sl. No.	Item Description	VENDOR NAME
1	Gate, Globe, Check valves	Flosteer Engineering (I)Pvt.Ltd / Skilt Fabricators Pvt.Ltd / Steel Strong Valves (I) Pvt. Ltd./ A.V.Valves Limited / Ampo S Co Op Poyam Valves / Fouress Engineering (I)Pvt.Ltd / L & T Valves Limited / Valvitalia S.P.A / B.F.E.Srl Bonney Forge / Weir BDK Valves / NSSL Limited / Micon Valves (I) Pvt. Ltd. / Niton Valve Industries Ltd / Shalimar Valves Pvt. Ltd. / Leader Valves Limited / K.S.B Pumps Ltd.
2	On/ Off Valves (Ball/ Butterfly valves)	L & T Valves Limited / Boteli Valve Group Company Ltd. / Ampo S Co Op Poyam Valves / Oswal Industries Ltd. / Flow Chem Industries / B.F.E.Srl Bonney Forge / Lvf S.P.A / Kitz Corporation / Akay Industries Pvt Ltd / Micro Finish Valves Pvt.Ltd. / Weir Bdk Valves / Micon Valves (I) Pvt. Ltd. / Dembla Valves Ltd. / Shalimar Valves Pvt. Ltd. / Anand Teknow Aids Engineering India / Leader Valves Limited / Asian Industrial Valves And / Uniflow Fisher / MIL/ IL / Virgo Engineers Pvt. Ltd. / Elomatic Ltd. / Dresser Itallia, Italy
3	LT Motor	ABB / Siemens / Alstom / Bharat Bijlee / CGL
4	LPBS/ LCS(Local control stations)	Flexpro Electricals Pvt. Ltd./ FCG Power Industries./ Prompt Engineering Works, Mumbai / Flameproof Equipments Pvt.Ltd. / Fcg Flameproof Control Gears / Baliga Lighting Equipment Pvt. Ltd.
5	LT Power Cables	Universal / RPG / FGI / Nicco / Torrent / KEI / Poly Cab
6	Control Cables	RPG / FGI / Torrent / Universal Cables Ltd / KEC International Limited / Nicco Corporation Ltd Hyd / KEI Industries Limited / Delton Cables Limited / Sriram Cables Pvt. Ltd. / Polycab Wires Pvt.Ltd / Torrent Cables Ltd / Apar Industries Limited / Ravin Cables Ltd
7	Cable trays	Indiana / Parekh / Vatco / Jamnametal / AV / Sadhna Steelmite Engineering / Patny Systems Pvt. Ltd / Jamna Metal Company / Parmar Metals Pvt. Ltd / Metalemms Bombay Pvt. Ltd./ Vinfab Engineers India Private / Premier Power Products / India Electricals Syndicate

OPYRIGHT AND CONFIDENTIAL
The information on this document is the property of BHARAT HEAVY ELECTRICALS LIMITED .
It must not be used directly or indirectly in any way detrimental to the interest of the company.

8	Cable Glands	United Agro Engineering Pvt. Ltd./ Flexpro Electricals Pvt. Ltd./ FCG Power Industries./ Prompt Engineering Works, Mumbai / Flameproof Equipments Pvt.Ltd./ FCG Flameproof Control Gears / Electromac Industries/ Comet / HMI / Power Engg .
9	Instrumentation Cables	Thermo Cables Limited / Middle East Specialized Cables Co. / Cords Cable Industries Ltd./ Kei Industries Limited / Delton Cables Limited / Paramount Communications Ltd / Special Cables Pvt. Ltd./ Polycab Wires Pvt.Ltd / Suyog Electricals Ltd / Elkay Telelinks Limited / Lapp India Pvt. Ltd. / Associated Cables Pvt Ltd. / Leoni Cable Solutions (India)
10	Pressure Gauges	Pyro electric / General instruments/ Altop / Precision Instrument / Waaree / WIKA
11	Pressure switches, Diff Pressure switch,	SOR/ Switzer/ General Instruments/ Waaree/ Indfoss India Limited / Ashcroft / Delta control
12	Level Switch	Magnetrol International Inc / V Automat And Instruments Pvt Ltd. / Levcon Instruments (P) Ltd. / Vegal / E+H / Siemens
13	Reflex level gauge	ChemtrolLevconN-AutomatiGI
14	pH / Conductivity Analysers	Rosemount / ABB / Yokogawa / E&H / HACH/ Emerson
15	Silica Analyser	Hach/ Emerson / Endress + Hauser GMBH and Co., Yokogawa India Ltd.
16	Control Valves	Instrumentation Ltd. / Dresser / MIL / Fisher / Forbes Marshall
17	Flow orifice	Hydro Pneumatics Private Limited / Micro Precision Products (P) Ltd / Instrumentation Ltd / Dynafluid Valves And Flow Controls / Scientific Devices (Bombay) Pvt. It/ Star-Mech Controls (I) Pvt. Ltd. / Eureka Industrial Equipments / General Instruments Consortium / Asian Industrial Valves -

OPYRIGHT AND CONFIDENTIAL
The information on this document is the property of BHARAT HEAVY ELECTRICALS LIMITED .
It must not be used directly or indirectly in any way detrimental to the interest of the company.

18	Pressure Safety valve/ Relief valve	Tyco Sanmar, Trichy / BHEL Trichy / Instrumentation Ltd. Palghat / Safety Instrument System Ltd. BOPP & Reuther Sicherheits- UND / Bliss Anand Pvt. Ltd. / Instrumentation Ltd / Weir BDK Valves / Forbes Marshall Ltd. /
19	Level Gauges	Magnetrol, Krohne, E&H, Levcon, V Automat, SBEM
20	Low pressure vessels	BHEL / R.D. Engineers/ SVEngineering ,Mumbai
21	WTP centrifugal pumps	Kirloskar Brothers / KSB / Sulzer / Mather - & Platt (M & P)
22	LV Switchgear Package	L&T/ Siemens / GE / ABB / Schneider / C and S Electric Limited/ Spaceage Switchgear Limited
23	CTs & PTs	ABB / Siemens / Prayog Electrical / Pragati Electricals / CGL / Kappa
24	Earth Leakage relay	Datar/ HHElecon / Prayog
25	Auxiliary Relay	ABB/ Jyoti/ Alstom/ GE
26	Control Switch	ABB / L & T / CGL I Kaycee / Siemens / GE / BCH
27	Timer	Siemens/ L & T / Schneider / Minilec / BCH
28	Instrument & Meter	L & T / Automatic Electric / Alstom / MECO / IMP / Rishab / Secure
29	Cable Lugs	Automic Electric & Electromac Industries / Dowells / Jenson/ COMET
30	Metal Clad Plug & Socket (Including Welding Socket)	Bhartia Cutler Hammer / Best & Crompton / Schneider Electric India Ltd / RB (Ryrol Burn)
31	HRC Fuse I Base	GEC / Alstom / Siemens / L&T / HHElecon
32	Indicating Lamp / Fitting	Telemik / Siemens / L& T / RAS Controls

OPYRIGHT AND CONFIDENTIAL
The information on this document is the property of BHARAT HEAVY ELECTRICALS LIMITED .
It must not be used directly or indirectly in any way detrimental to the interest of the company.

33	Terminal Block	Elmex / Tousha / Thermoplast / Connect Well
34	Air Circuit Breaker	L& T/ Siemens / GE / ABB / Schneider
35	Energy Meter	Automatic Electric / Alstom / IMP / Simco / L & T/ GEB
36	WTP Mixers/Static mixers	Lightnin / Komax / Penberthy
37	WTP Blower Twin Lobe :	Everest / Kay International/SWAM
38	WTP Metering pumps	Prominent / Asia LM I / Positive Metering
39	WTP diaphragm check valves	Plasto-matic/Brightech/Crane/Du rga
40	Eyewash / safety shower	Guardian/FRANCIS LESLIE & CO/ UNICARE EMERGENCY EQPT
41	Low pressure vessels	BHEL / R.D. Engineers/ SV Engineering, Mumbai
42	WTP pipelines	Duplex steel (Imported)/ ASTRAL/ JINDAL / TISCO/ ZENITH STEEL TUBES

OPYRIGHT AND CONFIDENTIAL
The information on this document is the property of BHARAT HEAVY ELECTRICALS LIMITED .
It must not be used directly or indirectly in any way detrimental to the interest of the company.

SECTION-II

DETAIL TECHNICAL SPECIFICATION

2.0.0 DESIGN AND CONSTRUCTION FEATURES

2.1.0 MIXED BED

The Mixed bed Ion exchange units are provided for removal of TDS and to achieve desired DM water quality to produce Dematerialized water of required quality and quantity for steam cycle.

The Mixed Bed Exchanger contains both Strong Acid Cation and Strong Base Anion resins. Hydrochloric Acid and Sodium Hydroxide are used for regenerating cation and Anion Resins respectively. The Dematerialized water thus generated will be led and stored in DM water storage tanks. MB is designed for regeneration every 7 days. The MB will be constructed of vulcanized rubber lined Carbon steel. Resin Traps are provided in rinse outlet and process outlet of the Mixed Bed unit.

a) Design

Mixed bed shall have Shells and Dished ends both constructed of IS:2062 and shall be designed as per IS 2825. Vessels shall be designed to contain resins, filter media, distribution system and under drain system. All the vessels shall be supplied with frontal pipe work with valves and fittings.

Mixed bed shall be provided with a group of individual pneumatic operated valves designed for manual operation. The Material of construction of all valves and piping shall be as per specification. All internal material shall be of Stainless steel (SS - 316) for pipe size less than 50 NB and more than 50 NB shall be MSRL unless otherwise specified elsewhere.

All the vessels shall be provided with Cat Ladder and Platform.

The interior of all vessels and all parts, which come into contact with corrosive liquid, shall be lined with natural rubber.

Wherever rubber lining is required, the same shall confirm to IS 4682 Part I.

All vessels shall be furnished with a manhole, hand hole, view glass, vent and drain valves, resin traps, flanged connections for the piping system and structural steel leg support.

MB units shall be equipped with three (3) nos. of sight glass, one (1) at upper resin level, one (1) in upper section of exchanger vessel & one (1) at resin interface level.

b) Construction

The Mixed Bed shall be of vertical, cylindrical type. It shall have shells and dished shall be designed as per IS 2825. The filters shall be designed to contain filter media, distribution

OPYRIGHT AND CONFIDENTIAL
The information on this document is the property of BHARAT HEAVY ELECTRICALS LIMITED .
It must not be used directly or indirectly in any way detrimental to the interest of the company.

system and under drain system. All internal material such as nuts bolts & washers shall be of Stainless steel (SS 316) unless otherwise specified.

The Ion exchangers shall be supplied with frontal pipe work with valves and fittings. Instrument and accessories shall be supplied as per specified in relevant clause.

c) General

All piping shall be designed, fabricated and tested in accordance with the Approved Standards, Piping Materials Specification as per the specification.

All pipes subject to corrosion which are unwrapped, unlagged and external to the building, in addition to the normal designed wall thickness, shall have an additional corrosion allowance sufficient to ensure a minimum service life of 20 years.

The velocity of flow in pipes shall not generally exceed the following values unless otherwise specifically mentioned.

Water lines	**m/s**
Water Discharge lines	1.0 to 2.2
Water suction lines	0.6 to 0.9

d) Pipe Materials

Instrument tubing shall be of stainless steel 316 for all pressures. Pipe connections after the isolating valves can be compression type couplings to the approval of the Owner/Owner's representative. Steels made by Acid Bessemer process are not acceptable. Fittings made from block forgings and machined to required dimensions are not acceptable.

Chemical Lines	:	GRP/CPVC.
DM water	:	SS 316
Filtered water piping	:	MSEP

e) Bends and Fittings

Wherever possible, pipe fittings such as bends and tees, shall be to standard dimensions.

All flanged joints shall meet the requirements of ANSI B 16.5. All fasteners shall be in mm size only.

All flanges shall be machined on the edge and spot faced at the back to receive bolts, washers and nuts.

For high-pressure services, flange faces must be of serrated finish. Blank flanges are to be solid steel and machined all over.

Flanges having pressure ratings less than 10 bar (g) shall not be used. All flange jointing material unless specified shall be approved quality.

OPYRIGHT AND CONFIDENTIAL
The information on this document is the property of BHARAT HEAVY ELECTRICALS LIMITED .
It must not be used directly or indirectly in any way detrimental to the interest of the company.

f) Technical Specification For Valves

The supply manufacture, inspection, testing and performance of valves shall comply with all currently applicable statutes, regulations and safety codes in the locality where the equipment will be installed. The equipment shall also conform the latest applicable standards. Nothing in this specification shall be construed to relieve the Supplier of this responsibility.

Latest edition of design codes and standards shall be considered as minimum requirements.

Design and Construction Features

- Supplier shall select valves and accessories, which are suitable for the operating conditions of the systems.
- Valves and accessories which are of a similar make, size and type shall be interchangeable with one another.
- All valve bodies shall be of the same nominal size as the adjacent piping, unless otherwise required.
- Hand wheels shall be of painted normal standard type and of spoked construction with smooth finished spokes and rims.
- Spindles for all valves located outdoors shall have weather-proof protection on spindle bearings and guards. Valve stem shall be forged or from a forged rolled bar. Casting for stem is not acceptable.
- All valves shall be designed to withstand a hydrostatic pressure test for tightness and mechanical strength as per applicable standards.
- For handling heavy valves (or part of valves), eye bolts, lugs etc. shall be provided.
- All valves shall be designed so that the hand wheel moves in a clockwise direction to close the valve. The face of each hand wheel shall be clearly marked with the words 'OPEN' and 'CLOSE' and shall be provided with an arrow to indicate the direction for opening.
- Valves of sizes 50 NB and above shall be provided with position indicators.
- All flanged valves shall have flanges integral with the valve body.
- All the valves shall be of CI diaphragm type. All the valves for corrosive service shall be rubber lined / ebonite lined to a thickness of minimum 3mm.

OPYRIGHT AND CONFIDENTIAL
The information on this document is the property of BHARAT HEAVY ELECTRICALS LIMITED .
It must not be used directly or indirectly in any way detrimental to the interest of the company.

The material of construction of diaphragm shall be as follows:

- Reinforced natural rubber for water service.
- Reinforced neoprene rubber for handling weak chemicals
- Teflon with backing for severe chemicals and solvents.

Needle valves shall be used in sampling lines and for instrument isolation.

Tests and Inspection

All valves shall be subjected to tests. Tests shall be conducted at Supplier/ Sub Supplier's works witnessed by the Owner/Owner's representative and conforming to the relevant standards and all test certificates shall be submitted for approval of Owner/Owner's representative before despatch of material. All valves shall be tested hydrostatically for strength, tightness of seats and tightness of backseating at pressure specified in the standards.

Procedure for testing the tightness of seats of valves shall be as follows. The valves shall be subjected to city water pressure to or a minimum of 2.812 Kg/cm² (40 psig). The pressure shall then be increased to the specified seat test pressure. Valves shall then be cracked open at this pressure to determine the tightness of the seat ring in the body. Gate valves shall be tested on both sides of the disc and globe valves shall be tested under the disc.

g) **Bolts And Nuts**

All bolts and nuts shall conform dimensionally and be threaded in accordance with the Approved Standards and shall be in mm size only.

Where there is a risk of corrosion, studs and bolts are to be finished flush with the surface of the nuts otherwise a maximum of 1.5 complete threads shall protrude.

The use of slotted screws shall be avoided, hexagon socket screws of recess type heads being preferred.

When connecting pipe work to fittings studs shall not be used. Where fitted bolts are used they shall be adequately marked to ensure correct assembly and the fitted portion shall be not less than 4 mm in diameter larger than the threaded diameter. They shall be driving fit in the reamed holes they occupy.

All washers shall be included in the scope, including locking devices and anti-vibration arrangements, which shall be subject to the approval of the Owner/Owner's representative. Taper washers shall be fitted where necessary.

If bolts are to be tightened under heat or by mechanical extension, one set of the necessary equipment shall be provided under this Order and retained at site for each unit.

OPYRIGHT AND CONFIDENTIAL
The information on this document is the property of BHARAT HEAVY ELECTRICALS LIMITED .
It must not be used directly or indirectly in any way detrimental to the interest of the company.

h) **Welding**

General
All welding performed in pursuance of this Order shall conform to the Approved Standards. The Supplier shall show that the proposed welding specifications and standards conform to the requirements of the design codes adopted for the relevant portion of the work. Wherever there is conflict between Codes and Standards the Owner/Owner's representative shall decide which shall prevail.

Welding Techniques
Single sided butt weld joints (in low alloy steel and high yield steel) shall be designed to have the root run made by the Gas Tungsten Arc Welding process.

For butt welded joints the following techniques are acceptable.
i. Shielded Metal arc welding with argon root-run.
ii. Shielded Metal arc welding with consumable insert in root fused by argon arc.
iii. Semi-automatic or automatic welding with argon root-run.

Weld joint preparations shall be in accordance with ASME Sec. VIII Div.1 as applicable or an equivalent or superior approved standard and to the Owner/Owner's representative's approval. Welding symbols shall be to any Approved Standard.

i) Instrument List: Please refer the P&IDs. Broad items are:

- Conductivity transmitter at the common outlet of MB
- Pressure gauge at the I/L& O/L
- pH transmitter (Ultra-Pure Water) at the common outlet of MB
- Dual Channel Silica analyzer at the common outlet of MB
- FT at the I/L & O/L
- pH analyser on the DM water storage tank fill pump discharge header.

Acid and alkali dosing system:
- Level gauge
- Level low switch

j) Design Criteria

i. Feed water source	: DM water from existing DM plant.
ii. Design DM water analysis	: Refer below (clause 'k')
iii. Net output capacity of MB	: 95m3/hr, (2 x 100 %)
iv. Operation / location	: Semi-automatic / Outdoor
v. Stream configuration	: Refer flow scheme and scope of supply

Note: There shall be interconnection between two MB streams in such a way that, during regeneration of one mixed bed, second mixed bed can be possible. Also in case of emergency 2 mixed bed shall run together.

OPYRIGHT AND CONFIDENTIAL
The information on this document is the property of BHARAT HEAVY ELECTRICALS LIMITED.
It must not be used directly or indirectly in any way detrimental to the interest of the company.

k) DM water analysis at the outlet of existing DM plant (Typical)

Sl. No.	Characters	Unit	water Analysis
1	pH		6.5 - 7
2	Conductivity	µ/cm	1.2
3	SiO_2	mg/l	0.06
4	Hardness	mg/l	Nil
5	Fe	mg/l	< 0.036
6	Cu	mg/l	< 0.006

Treated water quality from Mixed Bed unit shall be guaranteed at rated capacity to meet the following requirement :

a. Total electrolyte not to exceed : 0.1 ppm

b. Reactive silica as SiO2 : <0.01 ppm

c. Conductivity at 25°C, micro mho/cm : <0.1

d. pH : 6.8 – 7.2

l) Specified Data Sheet for Mixed Bed Units

	MB Exchanger		
	Design standard		IS:2825
	Type		Vertical, dished ended, Rubber lined, Steel welded vessel
	No. of Units		2 X 100% - MB
	Design Pressure		Shut off head of upstream pump
	Hydrostatic test pressure		1.5 times design pressure
	Maximum flow rate per unit area		45m3/hr./m2
	Rubber lining		4.5 mm thick (min) to IS: 4682 Part I
	Free board		100% of bed depth
	Gross output of each exchanger per cycle		15960 m^3.
	Minimum resin bed depth		1000 mm
	Material of construction		IS:2062
	Minimum shell / dishend thickness		6/8 mm thickness

OPYRIGHT AND CONFIDENTIAL
The information on this document is the property of BHARAT HEAVY ELECTRICALS LIMITED .
It must not be used directly or indirectly in any way detrimental to the interest of the company.

	Tolerance		0.2 mm mill tolerance for dished end, 2 mm thinning allowance
	Resin type		High capacity strongly acidic, polystyrene based cation exchanger resin and strongly basic anion exchanger resins.
	Method of regeneration		Co current (Simultaneous air blower)
	Under drain system		Strainer on plate.
	Accessories / Instrumentation		Refer P&ID and annexures.
	Air scouring blowers (For MB units)		
	Type		Rotary, twin lobe
	No. of units		2 x 100% (1w+1s)
	Capacity & Head		As per requirement of MB units.
	Material of construction		CI Gr. 25-with EN8 shaft with SS sleeving, damper and filters in CS, Base plate in M.S.
	Medium handled		Air
	Design temperature		Refer project information
	Painting		As per painting specification
	pH Correction Dosing Station		
	pH Correction Solution tank		One (1W)
	Capacity of tank	Litres	To suit process requirement
	Material of construction		MSRL / FRP
	pH Correction Dosing Pump	Nos.	2 (1w + 1s)
	Capacity of pump		--
	head of pump		--
	Type		--
	Material of construction		--
	Motorised Agitator for above tank		One
	Material of construction		SS316
	Acid measuring tank		
	Design standard		BS 4994
	Material of construction		FRP
	No. of tanks		1 no. 100% capacity for MB.
	Fluid handled		32 % HCl diluted to required concentration
	Capacity		One regeneration requirement with 20% margin
	Accessories / instruments		Refer P&ID and annexure.

OPYRIGHT AND CONFIDENTIAL
The information on this document is the property of BHARAT HEAVY ELECTRICALS LIMITED .
It must not be used directly or indirectly in any way detrimental to the interest of the company.

	Caustic dilution tank		
	Design standard		IS 803
	Material of construction		MSEP / FRP
	No. of tanks		1 no. 100% capacity for MB.
	Fluid handled		48 % NaOH diluted to 10% solution
	Capacity		One regeneration requirement with 20% margin
	Accessories / instruments		Refer P&ID and annexures.
	Agitators for caustic dilution tanks		
	Quantity		1 no. per tank
	Type		Turbine type
	Material of construction		
	Impeller / shaft		SS - 316
	Mounting		Clamped / flanged
	Impeller type		Propeller
	Transmission		Direct coupled
	Ejectors		
	Nature of fluid		Acid/ Caustic
	No. of ejectors		2 Nos.
	Location		i) 1 no. at the outlet of AMT ii) 1 no. at the outlet of CDT
	Injection fluid		HCI / NaOH
	Material of construction		Ebonite lined CI

2.2.0 SIDE STREAM FILTERS

2 x 50% Side Stream Filters (SSF) shall be provided to filter 3% of the total circulating water flow of 6600 m^3/hr. along with SSF backwash pumps and blowers. SSF backwash water shall be tapped from 1000 m^3 CT make up water storage tank with the help of SSF backwash water pump. SSF backwash waste water shall be collected in CT drain cum SSF backwash pit from where it shall be pumped to the existing OWS system network. Treated water shall be discharged to the CW pump sump.

a) Filtered water analysis (make-up water for the cooling tower operating at 5CoC)

Sl. No.	Characters	Unit	Filtered water Analysis
1	pH		8.3
2	Total Hardness	Mg/l as CaCO3	138
3	Ca Hardness	Mg/l as CaCO3	72
4	Sodium	Mg/l as CaCO3	94

OPYRIGHT AND CONFIDENTIAL
The information on this document is the property of BHARAT HEAVY ELECTRICALS LIMITED.
It must not be used directly or indirectly in any way detrimental to the interest of the company.

5	Iron	As Fe	Traces
6	Total Cation	Mg/l as CaCO3	232
7	Turbidity	NTU	<2.4
8	Total Alkalinity	Mg/l as CaCO3	156
9	Sulphate	Mg/l as CaCO3	7.2
10	Chloride	Mg/l as CaCO3	68.4
11	EMA	Mg/l as CaCO3	75.6
12	Total Anion	Mg/l as CaCO3	231.6
13	Silica	Mg/l as SiO_2	24
14	$KMnO_4$ Value	Mg/l as CaCO3	18

Outlet water quality of SSF

Turbidity < 2

b) Specified Data sheet

	SIDE STREAM FILTER (SSF)		
	Vessel design standard		IS 2825
	Type		Vertical filter
	No. of units		2 x 50%
	Material of Construction		MS with epoxy paint
	Gross capacity	m^3/hr	200 m^3/hr (for both the SSF together)
	Design pressure		Suitable considering the shut-off head of feed pump.
	Hydrostatic test pressure		1.5 times design pressure
	Specific normal flow rate / area	m3/hr/m2	15 (max.)
	Back wash flow rate/area	m3/hr/m2	36 (max. for MGF)
	Filtering medium		Sand / Gravel / Anthracite
	Minimum bed depth	mm	1000
	Minimum shell thickness	mm	6
	Minimum free board		50 % of bed depth
	Thickness tolerance / Allowance		3.2 mm corrosion allowance, 0.2 mm mill tolerance & 2 mm thinning allowance for dished end.
	Other accessories / Instruments		Refer control & instrumentation.
	Type of under drain and		As per manufacturers' standard.

OPYRIGHT AND CONFIDENTIAL
The information on this document is the property of BHARAT HEAVY ELECTRICALS LIMITED .
It must not be used directly or indirectly in any way detrimental to the interest of the company.

	distributor system.		
	Internal coating		Epoxy painting
	External painting		As per painting specification.
	SSF Backwash Pumps and blowers		
	Capacity	m^3/hr.	Suitable
	MOC		CI
	Quantity	No.	Two, 2(1w +1s)
	Potable Water Tank		One (1)
	Capacity of tank		5 m^3
	Material of construction		HDPE / FRP
	Service Water Tank		One (1)
	Capacity of tank		5 m^3
	Material of construction		HDPE / FRP

2.3.0 EYE WASH AND SAFETY SHOWER

Eye wash and safety shower shall be provided with the following.

a) The twin fountainhead shall give soft, controlled drenching of eye/face when the foot pedal is pressed.

b) Showerhead should give uniform shower of water as soon as the weight is applied on the footboard.

c) All mild steel parts shall be properly painted with 3 coats of anticorrosive paints.

d) Material of Construction:

Pipe	: GI heavy grade conforming to IS: 1239
Self-closing Valve	: Gun Metal
Bowl for eyewash	: Stainless steel
Eye wash nozzles	: Copper / S.S. / Plastic
Shower head	: C.P.Brass
Foot Pedal	: M.S. with aluminium top
Spring	: M.S. Galvanised
Pull chain	: M.S. Galvanised / S.S.

e) Inspection And Testing:

The whole assembly shall be tested for its hydraulic performance and shall be capable of withstanding hydraulic test pressure of 7.0 kg/cm²(g).

f) Vendor shall furnish drawings and data as per requirement and submit for approval prior to manufacturing.

OPYRIGHT AND CONFIDENTIAL
The information on this document is the property of BHARAT HEAVY ELECTRICALS LIMITED .
It must not be used directly or indirectly in any way detrimental to the interest of the company.

2.4.0 Service and potable water tank

Service and potable water tank shall be of HDPE / FRP material. The service and potable water distribution P&ID, P&ID for CW system (indicating service water tank) is enclosed for reference. The instruments along with mounting accessories indicated on the tank as per the P&IDs are also in the scope of the Bidder.

The service and potable water tanks shall be provided with all required nozzles as indicated in the P&ID. Bidder shall provide CS threaded flanges for the tank (service and potable) nozzles along with pipe counter flanges.

One no. UV sterilizer of 5m3/hr capacity shall be provided for potable water system.

2.5.0 MANDATORY SPARES

1	**Centrifugal Pumps for each type and capacity**	
	Shaft sleeve	1
	Wearing rings (Impeller & Casing)	1
	Seal for pumps	1
	Gland, Packing & Gland Assembly	1
2	**Agitators for each type and capacity**	
	Gear box unit complete	1
	Bearings for gear box unit	1
	Motor gear box Coupling	1
	Gearbox agitator coupling	1
	Agitator	1
	Oil seals	2 sets
3	**Mixed Bed unit**	
	Cation resin	1Fill
	Anion resin	1Fill
	Resin traps	One full set
	Strainers for Mixed bed unit	10% of total quantity
	Acid / Alkali ejectors	10% of total quantity
	Fume absorber	1
	CO2 absorber	1
	Gaskets	10% of each size

OPYRIGHT AND CONFIDENTIAL
The information on this document is the property of BHARAT HEAVY ELECTRICALS LIMITED .
It must not be used directly or indirectly in any way detrimental to the interest of the company.

	Hardware	10% of each size and type
	Ejectors	2nos
4	**Centrifugal blower**	
	Shaft sleeve	1
	Gland sleeve	1
	Bearings	1
	Seals	1
	Belts	Each 1set
5	**Valves**	
	Pressure vacuum relief valve	1 no. of each type & rating
	Pressure vacuum relief valve springs	1 no. of each type & rating
	SS solenoid valve	1 no. of each type & rating
	Plug Valve	1 no. of each type & rating
	Check valve/ Non return valve	1 no. of each type & rating
	Ball valve	1 no. of each type & rating
	Globe valve	1 no. of each type & rating
	Diaphragm valve	1 no. of each type & rating
	Butterfly valve	1 no. of each type & rating
	Victaulic coupling with seals and fasteners of different sizes	30% of full qty
	Repair Kit for all valves each one set (stem.plug /disc, seat, all gaskets, O rings, seals etc)	each 1set
6	**Instruments**	
	Pressure gauge	5% for each type and range subject to minimum 1 no.
	Pressure switch	5% for each type and range subject to minimum 1 no.
	Level gauge	5% for each type and range subject to minimum 1 no.
	Level switch	5% for each type and range subject to minimum 1 no.
	Differential pressure switch	5% for each type and range subject to minimum 1 no.
	Flow orifice	1 no. of each type & rating
	Silica Analyzer	1 no.

OPYRIGHT AND CONFIDENTIAL
The information on this document is the property of BHARAT HEAVY ELECTRICALS LIMITED.
It must not be used directly or indirectly in any way detrimental to the interest of the company.

	Conductivity analyzer	1 no.
	pH analyzer	1 no.
	Resin	5% for each type and range subject to minimum 1nos.
	Resin column	5% for each type and range subject to minimum 1nos.
	Junction boxes (Terminal Blocks, Cable glands, Lug)	5% for each type and range subject to minimum 1 no.
	Terminal Blocks, fuse, MCB's for control Panel)	5% for each type and range subject to minimum 1 no.
	Control valve critical parts(stem packing, O-Rings, Gaskets, Lubricants vale trims, position transmitter and actuator parts)	5% for each type and range subject to minimum 1 no.
7	**Electrical**	
	Switchgear	
	Push Buttons of each type	Min. 10% of installed quantity or 2 nos. whichever is greater.
	Selector switches of each type	Min. 10% of installed quantity or 2 nos. whichever is greater.
	Indication lamps of each type	Min. 30% of installed quantity or 10 nos. whichever is greater.
	Ammeters of each range	1
	Voltmeter	1
	Switch fuse unit of each rating	Min. 10% of installed quantity or 2 nos. whichever is greater.
	Fuse of each rating and type	Min. 30% of installed quantity or 10 nos. whichever is greater.
	Contactors of each rating and type	Min. 10% of installed quantity or 4 nos. whichever is greater.
	Total no. of bimetal thermal overload relays of each range	Min. 10% of installed quantity or 2 nos. whichever is greater.
	Lock out relay	Min. 10% of installed quantity or 2 nos. whichever is greater.
	Anti-pumping relay	Min. 10% of installed quantity or 2 nos. whichever is greater.
	Trip coil supervision relay	Min. 10% of installed quantity or 2 nos. whichever is greater.
	Auxilliary relays of each type	Min. 20% of installed quantity or 2 nos. whichever is greater.
	Spring charge motors	2 per switchgear
	Control transformers	10%

	Fuse bases of each size	Min. 10% of installed quantity or 1 set of each whichever is greater.
	Rows of terminal blocks of each type	10%
	Local push button stations of each type	10% of total requirement
	DC starters	10% of total requirement
	Check Synchronizing relay each type	1
	Service / test position limit switches each type	Min. 10% of installed quantity or 1 set of each whichever is greater.
	Spring charging limit switches each type	2 or 10% whichever is greater
	Motors	
	Bearings of each motor type and rating	Min. 10% of installed capacity
	Cooling fans for the motors	min. 10% of installed quantity or 1 no. whichever is greater.
	Dust seals for the motors	min. 10% of installed quantity or 4 no. whichever is greater.

Note: Bidder shall supply all the Mandatory Spares as listed above. If not supplied suitable reasoning shall be furnished against each item during detail engineering. If proper justification is not provided, bidder shall supply the same item without any price implication This will be helpful in verifying compliance to the tender requirement of Mandatory Spares'.

OPYRIGHT AND CONFIDENTIAL
The information on this document is the property of BHARAT HEAVY ELECTRICALS LIMITED .
It must not be used directly or indirectly in any way detrimental to the interest of the company.

OPYRIGHT AND CONFIDENTIAL
The information on this document is the property of BHARAT HEAVY ELECTRICALS LIMITED .
It must not be used directly or indirectly in any way detrimental to the interest of the company.

SECTION-III

PRICE SCHEDULES

SL. NO	DESCRIPTION	QTY.	UNIT PRICE (Rs)	TOTAL PRICE (Rs)
1.	**Design, Engineering, Manufacture, Supply, Erection and commissioning (trial run and performance testing) of the following systems** as per BHEL specification PEMC-06165, Rev01 and its enclosures			
1.1	DM Polishing Units and its associated system	1		
	SSF Units and its associated system	1		
	Eyewash and Safety shower	3		
	Potable Water Tank	1		
	Service Water Tank	1		
1.2	Special Tools & Tackles	1 set		
1.3	Commissioning and Erection spares *Note*: *Item wise list of commissioning and erection spares with unit rate and quantity for all system for Sl. no 1.1 above to be furnished by bidder.*	1 set		
	Total Sl. No. 1			
2.	**Mandatory Spares (as applicable)**			
2.1	Centrifugal Pumps for each type and capacity			
2.1.1	Shaft sleeve	1		
2.1.2	Wearing rings (Impeller & Casing)	1		
2.1.3	Seal for pumps	1		
2.1.4	Gland, Packing & Gland Assembly	1		
2.2	Agitators for each type and capacity			
2.2.1	Gear box unit complete	1		
2.2.2	Bearings for gear box unit	1		
2.2.3	Motor gear box Coupling	1		
2.2.4	Gearbox agitator coupling	1		
2.2.5	Agitator	1		
2.2.6	Oil seals	2 sets		

OPYRIGHT AND CONFIDENTIAL
The information on this document is the property of BHARAT HEAVY ELECTRICALS LIMITED .
It must not be used directly or indirectly in any way detrimental to the interest of the company.

SL. NO	DESCRIPTION	QTY.	UNIT PRICE (Rs)	TOTAL PRICE (Rs)
2.3	Mixed Bed unit			
2.3.1	Cation resin	1Fill		
2.3.2	Anion resin	1Fill		
2.3.3	Resin traps	One full set		
2.3.4	Strainers for Mixed bed unit	10% of total quantity		
2.3.5	Acid / Alkali ejectors	10% of total quantity		
2.3.6	Fume absorber	1		
2.3.7	CO2 absorber	1		
2.3.8	Gaskets	10% of each size		
2.3.9	Hardware	10% of each size and type		
2.3.10	Ejectors	2 nos.		
2.4	Centrifugal blower			
2.4.1	Shaft sleeve	1		
2.4.2	Gland sleeve	1		
2.4.3	Bearings	1		
2.4.4	Seals	1		
2.4.5	Belts	Each 1set		
2.5	Valves			
2.5.1	Pressure vacuum relief valve	1 no. of each type & rating		
2.5.2	Pressure vacuum relief valve	1 no. of each type & rating		
2.5.3	SS solenoid valve	1 no. of each type & rating		
2.5.4	Plug Valve	1 no. of each type & rating		
2.5.5	Check valve/ Non return valve	1 no. of each type & rating		
2.5.6	Ball valve	1 no. of each type & rating		
2.5.7	Globe valve	1 no. of each type & rating		
2.5.8	Diaphragm valve	1 no. of each type & rating		
2.5.9	Butterfly valve	1 no. of each type & rating		
2.5.10	Victaulic coupling with seals and fasteners of different sizes	30% of full qty.		
2.5.11	Repair Kit for all valves each one set (stem.plug/disc, seat, all gaskets, O rings, seals etc)	each 1set		

OPYRIGHT AND CONFIDENTIAL
The information on this document is the property of BHARAT HEAVY ELECTRICALS LIMITED .
It must not be used directly or indirectly in any way detrimental to the interest of the company.

SL. NO	DESCRIPTION	QTY.	UNIT PRICE (Rs)	TOTAL PRICE (Rs)
2.6	Instruments			
2.6.1	Pressure gauge	5% for each type and range subject to minimum 1 no.		
2.6.2	Pressure switch	5% for each type and range subject to minimum 1 no.		
2.6.3	Level gauge	5% for each type and range subject to minimum 1 no.		
2.6.4	Level switch	5% for each type and range subject to minimum 1 no.		
2.6.5	Differential pressure switch	5% for each type and range subject to minimum 1 no.		
2.6.6	Flow orifice	1 no. of each type & rating		
2.6.7	Silica Analyzer	1 no.		
2.6.8	Conductivity analyzer	1 no.		
2.6.9	pH analyzer	1 no.		
2.6.10	Resin	5% for each type and range subject to minimum 1no.		
2.6.11	Resin column	5% for each type and range subject to minimum 1no.		
2.6.12	Junction boxes (Terminal Blocks, Cable glands, Lug)	5% for each type and range subject to minimum 1 no.		
2.6.13	Terminal Blocks, fuse, MCB's for control Panel)	5% for each type and range subject to minimum 1 no.		
2.6.14	Control valve critical parts(stem packing, O-Rings, Gaskets,	5% for each type and range subject to minimum 1 no.		
2.7	Electrical			
2.7.1	Switchgear			
2.7.1.1	Push Buttons of each type	Min. 10% of installed quantity or 2 nos. whichever is greater.		
2.7.1.2	Selector switches of each type	Min. 10% of installed quantity or 2 nos. whichever is greater.		
2.7.1.3	Indication lamps of each type	Min. 30% of installed quantity or 10 nos. whichever is greater.		
2.7.1.4	Ammeters of each range	1		
2.7.1.5	Voltmeter	1		

OPYRIGHT AND CONFIDENTIAL
The information on this document is the property of BHARAT HEAVY ELECTRICALS LIMITED .
It must not be used directly or indirectly in any way detrimental to the interest of the company.

SL. NO	DESCRIPTION	QTY.	UNIT PRICE (Rs)	TOTAL PRICE (Rs)
2.7.1.6	Switch fuse unit of each rating	Min. 10% of installed quantity or 2 nos. whichever is greater.		
2.7.1.7	Fuse of each rating and type	Min. 30% of installed quantity or 10 nos. whichever is greater.		
2.7.1.8	Contactors of each rating and type	Min. 10% of installed quantity or 4 nos. whichever is greater.		
2.7.1.9	Total no. of bimetal thermal overload relays of each range	Min. 10% of installed quantity or 2 nos. whichever is greater.		
2.7.1.10	Lock out relay	Min. 10% of installed quantity or 2 nos. whichever is greater.		
2.7.1.11	Anti-pumping relay	Min. 10% of installed quantity or 2 nos. whichever is greater.		
2.7.1.12	Trip coil supervision relay	Min. 10% of installed quantity or 2 nos. whichever is greater.		
2.7.1.13	Auxilliary relays of each type	Min. 20% of installed quantity or 2 nos. whichever is greater.		
2.7.1.14	Spring charge motors	2 per switchgear		
2.7.1.15	Control transformers	10%		
2.7.1.16	Fuse bases of each size	Min. 10% of installed quantity or 1 set of each whichever is greater.		
2.7.1.17	Rows of terminal blocks of each	10%		
2.7.1.18	Local push button stations of each	10% of total requirement		
2.7.1.19	DC starters	10% of total requirement		
2.7.1.20	Check Synchronizing relay each	1		
2.7.1.21	Service / test position limit switches each type	Min. 10% of installed quantity or 1 set of each whichever is greater.		
2.7.1.22	Spring charging limit switches each type	2 or 10% whichever is greater		
2.7.2	Motors			

OPYRIGHT AND CONFIDENTIAL
The information on this document is the property of BHARAT HEAVY ELECTRICALS LIMITED .
It must not be used directly or indirectly in any way detrimental to the interest of the company.

SL. NO	DESCRIPTION	QTY.	UNIT PRICE (Rs)	TOTAL PRICE (Rs)
2.7.2.1	Bearings of each motor type and rating	Min. 10% of installed capacity		
2.7.2.2	Cooling fans for the motors	min. 10% of installed quantity or 1 no. whichever is greater.		
2.7.2.3	Dust seals for the motors	min. 10% of installed quantity or 4 no. whichever is greater.		
			Total Sl. No. 2	
			Total Price Sl. No. (1+ 2)	
3.0	**Recommended Spares (optional price)**			
3.1	2 years recommended spares along with their quantities and unit rate for normal trouble free operation of the system described in Sl. No. 1.1 above based on bidders' experience. Note: *List for recommended spares and it's unit rate to be furnished by bidder.*	RO		
RO= Rate Only	NA= Not Applicable			

NOTES:-

1. Bidder to quote strictly as per BHEL's NIT requirements.
2. Bidder to note that this is a LUMP SUM Turn-Key Order. Any additional claim after placement of order will not be entertained under any circumstances.
3. Offer will be evaluated based on total price for Supply and Erection & commissioning and Supply of Mandatory Spares (i.e. Sl. Nos. 1.+2. of price format). Prices of Optional Item shall not be considered for Price bid evaluation.
4. For purpose of ordering of complete DM Polishing Unit & Associated facilities by BHEL, the prices of all Supply and E&C portions shall be considered as follows:

   i) For Supply of complete System including Mandatory Spares:
   Shall be 85 % of the Total Price quoted by the bidder for complete DM Polishing Unit & Associated facilities as per Sl no 1 of price bid format plus Price quoted by the bidder for Supply of Mandatory Spares as per sl no 2 of price bid format.
   i.e. Total Price for the Supply shall be considered as 0.85 x Sl. No. 1 + Sl. No. 2.

   ii) For Erection & commissioning Services :
   Shall be 15% of the Total Prices quoted by the bidder for complete System as per Sl. no 1 of price bid format.

i.e. Total Price for Erection & Commissioning shall be considered as 0.15 x Sl. No. 1.

5. Separate Purchase Orders will be issued for Supply portion and for Erection & Commissioning works of this project. The Purchase Order for Supply portion including Mandatory Spares will be issued by BHEL-PE&SD whereas the Purchase Order for E&C portion will be issued by BHEL-PSWR (BHEL's Construction Management Division)
6. Bidder to quote the base rates only. All Applicable taxes and duties to be indicated shall be indicated separately for the Supply Portion and Erection & Commissioning Portion as follows:
   i) All Applicable Taxes and duties for Supply of Main Items shall be computed for the value of 0.85 x Sl.1.
   ii) All Applicable Taxes and duties for Erection & commissioning Part shall be computed for the value of 0.15 x Sl.1.
   iii) All Applicable Taxes and duties for Supply of Mandatory Spares shall be computed for the value of Sl. 2.
7. Bidder to quote separately, in an identical format, 2 years operational spares item wise with recommended quantity and unit rate. However ordering of the same shall be at the sole discretion of BHEL.
8. Bidder to fill up the above prices each line item wise (as indicated in the price bid format only) manually put his seal & signature and submit the same for price bid opening.

BIDDER'S SIGNATURE
NAME:
DATE
COMPANY SEAL

OPYRIGHT AND CONFIDENTIAL
The information on this document is the property of BHARAT HEAVY ELECTRICALS LIMITED .
It must not be used directly or indirectly in any way detrimental to the interest of the company.

OPYRIGHT AND CONFIDENTIAL
The information on this document is the property of BHARAT HEAVY ELECTRICALS LIMITED .
It must not be used directly or indirectly in any way detrimental to the interest of the company.

SECTION-IV

TENDER DRAWINGS/DOCUMENTS

Sl No.	Description	Drg. / Doc. No.	Rev. No.
1	Technical Purchase Spec. Of Water Treatment Plant	PY51199	02
2	Facility details – ONGC Hazira	--	
3	Annexure for Tanks	**5111168-ME-SPC-100-001**	R1
4	Annexure for Surface preparation and painting	**5111168-ME-SPC-100-001**	R1
5	Annexure for Motors and Actuators	**5111168-ME-SPC-100-001**	R1
6	Annexure for LT Switchgear	**5111168-ME-SPC-100-001**	R1
7	Annexure for Power and Control cables	**5111168-ME-SPC-100-001**	R1
8	Drive control philosophy	4-38121-03581	02
9	Spec for instrumentation and control for package units	PEIC-04202	00
10	Spec for Flow orifice assembly without wet calibration	PY 56026	02
11	Spec. for Steam & water analysis system	PY 56144	00
12	Data sheet of FRP Canopy	PY 56142	00
13	Master Document List	--	
14	Check List	--	
15	Typical Quality Plan For Mixed Bed And SSF Units	--	
16	MB and SSF data sheet	--	
17	Typical Pressure Relief Valve Datasheet		
18	P&ID of Mixed Bed and associated system	13810106496	01
19	P&ID of CW system	23810104546	01P
20	Eye wash and safety shower sketch		
21	P&ID SW PW Dist System	13810106222	00
22	Detailed Technical Specification - Mechanical	Vol-III, Section – 2, Sub Section – 2.14	R1
23	Plot Plan (power block area)	0-381-01-01570 (2Shts)	

NOTE: The bidder to comply with all the above specifications without any deviation

COPYRIGHT AND CONFIDENTIAL
The information on this document is the property of BHARAT HEAVY ELECTRICALS LIMITED,
It must not be used directly or indirectly in any way detrimental to the interest of the company.

RECORD OF REVISIONS

Rev. No.	Date	Revision Details	Prepared By	Checked By	Approved By
00	04.08.15	First issue	CHP	AKS	MSSN
01	01.04.16	Second issue	CHP	AKS	MSSN
02	11.11.16	PY spec revised.	CHP	AKS	MSSN

Ref. Doc.

HYDERABAD

PRODUCT STANDARD

PROJECT ENGINEERING & SYSTEMS DIVISION

COPYRIGHT AND CONFIDENTIAL
The information on this document is the property of BHARAT HEAVY ELECTRICALS LIMITED,
It must not be used directly or indirectly in any way detrimental to the interest of the company.

TECHNICAL PURCHASE SPECIFICATION
FOR
WATER TREATMENT PLANT

COPYRIGHT AND CONFIDENTIAL
The information on this document is the property of BHARAT HEAVY ELECTRICALS LIMITED .
It must not be used directly or indirectly in any way detrimental to the interest of the company.

1.0.0 INTENT OF SPECIFICATION:

This specification is intended to cover the design, manufacture, assembly, testing at manufacturer's works, painting at works, delivery to site, proper packing and forwarding, unloading at site, site storage, handling at site, erection, painting at site, commissioning, testing at site (including site performance test), of the system along with all accessories as specified in the scope of work and as required for the safe and trouble-free operation of equipment to be installed at site.

1.1.0 This specification shall be read in conjunction with its enclosures. In case of any discrepancy arising between this job specification & its enclosures, wherein more than one level (i.e. both less stringent level and more stringent levels) of same requirement have been indicated for a particular item, the most stringent of all shall be followed and shall relevantly over-ride others. Otherwise, the requirements indicated in this job specification shall be considered as additional requirements to the ones indicated in the enclosures. Further, if a requirement in this specification or its enclosures, calls for decision of owner/BHEL, it shall be bidder's sole responsibility to clearly bring out the same before submitting his technical tender offer, so as to enable owner/BHEL to furnish their decision. If such a requirement is not duly addressed by bidder during tender stage and same comes out during order execution stage, it shall be binding on the bidder to comply with the decision furnished by owner/BHEL then, without any cost, delivery, or any other commercial implications.

1.2.0 Any additional equipment, material, etc., which are not specifically mentioned here, but are required to make the supplied equipment complete in all respect, in accordance with the intent of this technical specification, contractual agreement, statutory requirements, relevant/applicable codes/standards, good engineering practices, and for safe and trouble-free operation, shall be deemed to be covered under the scope of this specification.

2.0.0 SCOPE OF WORK:

Scope of supply is covered in job specification.

3.0.0 GENERAL CONDITIONS OF CONTRACT

3.1.0 LOCATION/POSITIONING OF WORKS

The CONTRACTOR shall be responsible for the true and proper setting out of the WORKs in relation to points, levels of reference co-ordinates, orientation, alignment and marks given in the CONTRACT DOCUMENT in writing and for correctness of the positions, levels, dimensions, orientation and alignment of all parts of the WORKs, and for the provision of all necessary instruments, appliance and labour in connection therewith. If, at any time during the progress of WORKs, any error appears or arises in the position, orientation, alignment, levels or dimensions or dimensions or any part of the WORKs, the CONTRACTOR shall rectify the error at his own cost to the satisfaction of Purchaser/Customer. The checking of any setting out of any line, level, co-ordinate, depth, orientation or alignment or position of a marker by the Purchaser/Customer shall not in any way relieve the CONTRACTOR of his responsibility for the correctness thereof. CONTRACTOR shall carefully protect and preserve all bench marks, sight rails, pegs and other things used in setting out the WORKs.

3.2.0 SAFETY PROCEDURES AND RESTRICTIONS

COPYRIGHT AND CONFIDENTIAL
The information on this document is the property of BHARAT HEAVY ELECTRICALS LIMITED .
It must not be used directly or indirectly in any way detrimental to the interest of the company.

The CONTRACTOR shall adhere to the following safety requirements at SITE during execution of WORKs:

(i) SAFETY REGULATIONS

a) In respect of all labour, directly, or indirectly employed in the WORKs for the performance of CONTRACTOR's part of this agreement, the CONTRACTOR shall at his own expense arrange for all the safety provisions as per safety CODES of CPWD, Indian Standards Institute, The Electricity Act, The Mines Act and such other Acts as applicable.

b) The CONTRACTOR shall observe and abide by all fire and safety regulations of the COMPANY before starting construction WORK. CONTRACTOR shall consult with OWNER's Safety ENGINEERs and must make good to the satisfaction of the OWNER

(ii) GENERAL

a) No labour below the age of eighteen years shall be employed on the WORK.
b) The CONTRACTOR shall not pay less than what is provided under laws to labourers engaged by him on the work.
c) The CONTRACTOR shall at his own expense comply with all labour laws and keep the OWNER indemnified in respect thereof.

(iii) WATCHING AND LIGHTING

The CONTRACTOR shall, in connection with the WORK, provide and maintain at his own cost all lights, guards, fencing, safety equipment, markers and watching when and where necessary or required by the Purchaser/Customer or by any duly constituted authority for the protection of the WORKs or for the safety and convenience of the public or others.

(iv) TIME SPAN FOR RESPONSIBILITY OF WORKS

From the time of commencement of the WORKs till the issuance of a CERTIFICATE OF COMPLETION AND ACCEPTANCE of the WORKs , CONTRACTOR shall be fully responsible for the care of WORKs and of all Temporary WORKs, in case any damage or loss happens to the WORKs or to any part of them or to any Temporary WORKs from any cause whatsoever other than war risks in respect of which insurance cover is not available even with payment of additional premium including damage caused by the CONTRACTOR himself during the execution of the CONTRACT, the CONTRACTOR shall repair and make good the same as his own cost. The CERTIFICATE OF COMPLETION AND ACCEPTANCE will be issued by the Purchaser/Customer only if the WORKs are in good order and conditions and conform in every respect with the requirements of the CONTRACT and OWNER's REPRESENTATIVE's instructions in accordance with the CONTRACT .

(v) USE OF OWNER's FACILITIES

Notwithstanding anything contained elsewhere in the CONTRACT, the CONTRACTOR shall make its own arrangements for all the facilities/resources required to carry out the WORK including but not limited to crane and Material Handling, living accommodation, etc. OWNER's Crane and any other hoists, living accommodation etc. shall not be available for CONTRACTOR's use.

(vi) COMPLIANCE OF LOCAL LAWS & REGULATIONS

COPYRIGHT AND CONFIDENTIAL
The information on this document is the property of BHARAT HEAVY ELECTRICALS LIMITED .
It must not be used directly or indirectly in any way detrimental to the interest of the company.

The CONTRACTOR shall comply with all the laws, rules and regulations including but not limited to CONTRACT Labour (REA) Act, Minimum Wages Act etc. and shall keep the OWNER harmless and indemnified for any action brought against it for any violation non-compliance of any of the Acts etc.

3.3.0 POLLUTION RESPONSIBILITY

In the performance of any and all services and the WORKs by the CONTRACTOR or his sub- Contractors, the CONTRACTOR shall accept full responsibility for compliance with all applicable laws and governmental orders, rules and regulations as amended/in force from time to time relating to pollution. CONTRACTOR and his sub-contractors shall also comply additional provisions as may be notified to the CONTRACTOR by the OWNER.

The CONTRACTOR agrees to inform himself and his supervisors of such Laws, Orders and Regulations and to make all his employees and the sub-contractors fully cognizant of their responsibilities there under.

The CONTRACTOR shall:-

i) Clean up and remove any pollution resulting from its non-compliance with the provisions of this section, at his cost and expense

ii) If the CONTRACTOR fails to do so, the COMPANY may clean up and remove the pollution. In which case the CONTRACTOR shall reimburse the OWNER upon receipt of bill from the OWNER, the cost of such clean up and removal.

3.4.0 GUARANTEE AND WARRANTY/DEFECT LIABILITY PERIOD

The CONTRACTOR agrees to ensure that all materials , equipment and components used in execution of the WORKs under this CONTRACT, shall be new and unused (not reconditioned) and of recent manufacture which shall in no case be of a date of manufacture older than one year from the date of shipment to SITE as the case may be.

4.0.0 CONSUMABLES

Supply of all consumables required till commissioning and performance testing (including first fill) shall be included in the scope and the same shall be supplied by the successful Bidder at appropriate time.

NOTE: Also Refer to Job specification for applicability.

5.0.0 LUBRICANTS

All flushing oil required, together with first fill of oil and/or grease for all parts of equipment requiring lubrication, shall be provided by the Bidder. For all types of lubricants, equivalent grade of other makes shall be readily obtainable locally.

NOTE: Also Refer to Job specification for applicability.

6.0.0 MANDATORY SPARES

Mandatory spare shall be as per Job Specification

7.0.0 RECOMMENDED SPARES

A minimum requirement of spare parts **based on the experience** of the Bidder sufficient for two (2) years of normal trouble free operation shall be recommended and quoted separately **as optional item.** Bidder shall furnish the description along with recommended quantity for each item in the offer.

8.0.0 ERECTION & COMMISSIONING SPARES

The Bidder shall also supply erection & commissioning spares along with his main equipment as per his experience, for replacement of damaged or unserviceable ones during the execution of the project at site, to avoid delay in the project schedule. This shall form part of the main equipment supply. The initial fill of lubricants, oil etc. shall also be supplied by the Bidder. Bidder shall not be allowed to use Mandatory Spares for Erection and Commissioning.

9.0.0 SPECIAL MAINTENANCE TOOLS AND TACKLES

One set of special tools and tackles required for operation, maintenance, inspection and repair, neatly packed in steel boxes complete with operating instructions for the complete Water Treatment system shall form part of the main equipment supply and a separate list for the same shall be furnished along with bid.

COPYRIGHT AND CONFIDENTIAL
The information on this document is the property of BHARAT HEAVY ELECTRICALS LIMITED .
It must not be used directly or indirectly in any way detrimental to the interest of the company.

COPYRIGHT AND CONFIDENTIAL
The information on this document is the property of BHARAT HEAVY ELECTRICALS LIMITED .
It must not be used directly or indirectly in any way detrimental to the interest of the company.

10.0.0 VENDOR DOCUMENTATION PROCEDURE

Sl. No.	Document Name / Type	To Contain	Required With Offer	Required After P.O	
			Compliances from Vendor & No. of Sets Reqd.	No. of Sets Required – Engg. & Approval /Review Activities .	No. of Sets Required- For Site & Customer Submission
1	(a) Drgs, , Data Sheets , Catalogues. BOM etc. (b) PIDs , SLDs, Block-Schematics etc. (wherever applicable)	Adequate Information & essential for proper Technical Evaluation of the Offers. Other Information to be furnished as defined in the applicable Tech Specs.	4 (Addl. Copies Required – wherever Offer Docs. Are subject to Review by Customer . See Spec. Requirement)	–	–
2	Terminal Point (s)	List of Scope Terminal Point (s) & Process Datra etc. – wherever applicable.	2 (See also Sl-1 above)	–	–
3	Deviations if any	To be clearly listed, furnishing reasons for non-compliance	2 (See also Sl-1 above)	–	–
4	Master Document List (**MDL**)- (***Blank format Attached with this specification)***	**a)** List of all Documents & Drgs., Spares Items etc. which are applicable for the Project . They shall be group wise enlisted in MDL Doc. **b)** Submission of Up-dated MDL Doc.is required at the time of each submission of Drgs./Doc or group of Drgs. / Docs.	-	3	10
5	Project completion activity "Bar-chart" matching with BHEL Project Schedule	Required for packages & for contracts and also for projects where Erection & Commissioning activities are in vendor scope.	Compliance required to meet BHEL Delivery Sch.	3	10
6	(a) Drgs, , Data Sheets , Catalogues. BOM etc. (b) PIDs , SLDs, Block-Schematics etc. (wherever applicable)	While carrying out Detailed Engg. during Post-Ordering Stage.	-	10	10
7	Information Reg. "INITIAL – FILL" Items & Consumable Items – List - As Required (for each applicable systems)	**a**) Confirmation from Vendor Required. The Items shall be considered as Part of main scope of supply.	**a**) Supply Confirmation Required from Vendor **b**) Doc. To be	10	10

Sl. No.	Document Name / Type	To Contain	Required With Offer	Required After P.O	
			Compliances from Vendor & No. of Sets Reqd.	No. of Sets Required – Engg. & Approval /Review Activities.	No. of Sets Required- For Site & Customer Submission
		b) A Separate Doc. To be furnished with Detail List & Quantity. (Applicable Items & Qty subject to Review during detail Engg.)	Enlisted in MDL.		
8	SPARES for Erection / Commissioning	**a**) Informative List required with Technical & Commercial bids. **a.1**) To consider as Part of main scope of Supply. **b**)Such Spares List is subject to Review during Detail Engg.	Vendor to Confirm Supply in their Offer.	6	10
9	"Operation and Maintenance Spares" / "Mandatory Spares" List	**a**)Recommended List by Vendor **b**) List with Other Data – if Specified in Tech. Spec.	**1**) To Enclose with Offer. **2**)To indicate price for the listed items in commercial offer & with extended validity	6	10
10	Vendor's "Bill of Material" Doc. (**BOM) –*Blank format attached with this specification)*** This Doc. Shall be Enlisted in MDL Doc.	1) The Engg. Part of Information in this Doc. Shall be approved by BHEL 2) Submission of this Document is essential during initial Submission stage of Engg. Docs. & the same be progressively Updated as the Detail Engg. progresses. 3) All Dispatchable Units shall be identified in this Doc with "Dispatch Tag-No." (5 Chr. BHEL Des. No. with 3 Chr. Running Item Sl No. – e.g. "Jxxxx / 001" , max. upto 999) . 4)The Despatch Tag no. shall be written on an 'Al- Strip' and tied to the dispatch able Unit or be prominently painted on each Item with washable paint.	-	6	10

COPYRIGHT AND CONFIDENTIAL
The information on this document is the property of BHARAT HEAVY ELECTRICALS LIMITED .
It must not be used directly or indirectly in any way detrimental to the interest of the company.

Sl. No.	Document Name / Type	To Contain	Required With Offer	Required After P.O	
			Compliances from Vendor & No. of Sets Reqd.	No. of Sets Required – Engg. & Approval /Review Activities.	No. of Sets Required- For Site & Customer Submission
		PL. NOTE – This Standard Unified System shall be followed being an essential part of Field Quality Assurance Practices & for proper Identification of Items at Site.			
11	Quality Assurance Plan (QAP) & Factory Testing Procedure Documents	1) Approval from BHEL required. 2) Submission along with the Engg. Docs.	**A**) Submission –if already standardized with BHEL / Draft proposal & it may be finalized after Review. **B**) Submission compliance from Vendor required	6	4
12	FQAP (Field Quality Assurance Plan) & Site Erection, Testing & Commissioning Procedure documents	1) Approval from BHEL site. 2) Submission along with the Engg. Docs.	Same as for Sl-11 above	6	4
13	<u>Erection Documents & Drawings:-</u>	1) To contain final MDL, BOM, Handling & Storage Instructions Doc., Initial-Fill & Consumables Items list, Erection & Commissioning Spares List, Operation & Maintenance spares list / Mandatory Spares List etc. 2) Submission minimum 6 – weeks before eqpt. Schedule dispatch. 3) The drgs. Shall be kept in plastic pouches and neatly arranged, submitted in an aesthetic, appropriate & durable folder(s). Documents filed appropriately in Folder in – seriatim of MDL.	-	-	10

COPYRIGHT AND CONFIDENTIAL
The information on this document is the property of BHARAT HEAVY ELECTRICALS LIMITED .
It must not be used directly or indirectly in any way detrimental to the interest of the company.

Sl. No.	Document Name / Type	To Contain	Required With Offer	Required After P.O	
			Compliances from Vendor & No. of Sets Reqd.	No. of Sets Required – Engg. & Approval /Review Activities.	No. of Sets Required- For Site & Customer Submission
14	O&M Manual Document Folder(s)	1) Submission 1-month before schedule eqpt. Dispatch (Draft copy shall be submitted beforehand for review by BHEL) 2) The manual shall be submitted in an aesthetic, appropriate & durable folder(s). Each vol. Shall be marked with its Vol. No. 3)**This Manual shall include primarily following information: -** **i)** Operational & safety instructions. **ii)** Environmental Safety instructions & indicating compliances of the Regulations in-force. **iii)** Guidelines incorporating requirements for Operation of the Equipment in Hazardous Environment- wherever applicable. **iv)** Master document List (MDL) doc. **v)** Bill of material (BOM) doc. **vi)** Erection Instructions.	-	Adv. Copy (2 sets)- for review by BHEL	Final Copies – (10 sets)

COPYRIGHT AND CONFIDENTIAL
The information on this document is the property of BHARAT HEAVY ELECTRICALS LIMITED .
It must not be used directly or indirectly in any way detrimental to the interest of the company.

COPYRIGHT AND CONFIDENTIAL
The information on this document is the property of BHARAT HEAVY ELECTRICALS LIMITED .
It must not be used directly or indirectly in any way detrimental to the interest of the company.

Sl. No.	Document Name / Type	To Contain	Required With Offer	Required After P.O	
			Compliances from Vendor & No. of Sets Reqd.	No. of Sets Required – Engg. & Approval /Review Activities .	No. of Sets Required- For Site & Customer Submission
		vii) Operational & Maintenance Instructions for all Systems / Items with adequate planations and sketches etc., Catalogue information included-(and applicable Model no.marked therein), Overhaul schedules etc. viii) Lubrication Schedule **ix**) Initial-Fill Items List **x**) Approved QAP's Shop Tests & Calibration Reports. **xi**) Approved FQAP – along with related docs, with site testing & commissioning Protocols etc. xii) Sub-Vendor O&M manuals.			
15	"As –Built" Drawings & Documents	Submission within three weeks –after commissioning at site	-	-	10
16	Compact Disc (CD)	1) MDL, All drawings, Documents, Data sheets – as Listed in Approved MDL Doc. , all applicable Catalogues (Scanned), BOM & all items covered in the O&M Manuals & the "As-built" Drgs. 2) To submit along with the submission of "As-built" drgs. & docs.	-	-	3

Notes:

10.1.1 BHEL will furnish their approvals / comments within 15 days after submission of drawings/ documents.

10.1.2 The O&M manuals shall contain the following details as minimum in addition to those indicated in the above table:-

- Identification details of the equipment like BHEL PO NO., Vendor's Sl. No., Vendors contact address with tel., fax details.
- Description of the equipment.

COPYRIGHT AND CONFIDENTIAL
The information on this document is the property of BHARAT HEAVY ELECTRICALS LIMITED .
It must not be used directly or indirectly in any way detrimental to the interest of the company.

- Final Data sheets and Drawings of the equipment as per the list mentioned in this specification.
- O&M Manuals of the equipment.
- Recommended 2 years operational spares.
- Test reports.

10.1.3 The erection documentation shall consist of

- All drawings/documents,
- O&M instructions of pump, motor, instruments, ARC valve, etc.
- All such drawings/documents, not submitted for review, but essential for erection/commissioning, e.g. cooling plan, flushing plan, assembly drawings, etc.
- Master document list
- Site dispatch able B.O.M.
- Any special safety/erection/commissioning requirements, vendor would like to specify.

10.1.4 For drawings, data, sheets and all graphic works Auto Cad release 2006 or later versions and for all texts, MS Word 2000 shall only be used.

11.0.0 TESTING, INSPECTION AND QUALITY PLAN

Test at Manufacturer's work:

1. Shop tests shall include all tests to be carried out at contractor's works; works of his sub-contractor and at works where raw materials supplied for manufacture of equipment is manufactured. The tests to be carried out shall include but not limited to the tests as follows:

2. Composition of all material, castings, forgings, etc. correlation certificates for the same for each equipment and component shall be furnished.

   Hydraulic test for vessels, pipes, valves, specialties, pump casting, etc.

3. Performance test (Head, Capacity and Power) on pumps in line with applicable codes.

4. Tests on all electrical equipment/accessories as specified in respective electrical sub-sections.

5. Calibration tests for weight/load indicator.

6. Calibration tests of all standard orifices, nozzles, level switches and other instruments.

Material Tests

All materials used for construction shall be of tested quality. All materials shall be tested as required by such standard, and test certificates shall be made available to the Purchaser.

Where stage inspection is to be witnessed by the Purchaser before starting the fabrication, all material test certificates shall be correlated and verified with the actual material used for construction by Purchaser's inspector who shall stamp the material. In case mill test certificates for the material are not available, the Bidder shall carry out physical and chemical tests at his own cost from a testing agency, approved by the Purchaser, as per the requirement of specified material standard. The samples for

COPYRIGHT AND CONFIDENTIAL
The information on this document is the property of BHARAT HEAVY ELECTRICALS LIMITED .
It must not be used directly or indirectly in any way detrimental to the interest of the company.

physical and chemical testing shall be drawn up in presence of Purchaser's inspector who shall also witness the testing.

Wherever, the components shall be subjected to Non-Destructive Examination (NDE). The requirements of NDE shall comply with the relevant standards. All components subjected to NDE shall be identified and stamped by Purchaser's inspector on successful completion of testing.

Other Tests

Bidder to conduct all other tests as per this specification, applicable codes /standards and as per standard engineering practices.

12.0.0 Site Performance Test:

The equipment shall be guaranteed to meet performance requirements required by this specification and rectification shall be carried out until satisfactory results are obtained. The Purchaser reserves the right to reject the equipment should the performance values fall short of those indicated in the schedule of Technical data sheets.

Test at Sites:

Bidder shall carry out tests at site to prove to the Purchaser/Customer that the equipment of the plant complies with the requirements stipulated and is erected in accordance with requirements. Before the plant is put on trial run the contractor will be required to conduct tests to demonstrate to the Purchaser/Customer that each item of the plant is capable of correctly performing the functions for which it was specified to. These tests may be conducted concurrently with those required under commissioning sequence. Tests required shall generally be as follows:

All piping and valves, after installation, will be tested hydraulically at a pressure, 1½ times of the maximum attainable pressure in the system, to check against leak tightness.

All storage tanks shall be tested for leak tightness as per IS: 803.

All pressure vessels shall be hydraulically tested at 1½ times the design pressure or 2 times the working pressure, whichever is higher for a period of not less than 1 hr.

All valves/gates (Manual/automatic/remotely operated) shall be operated throughout 100% of the travel and these should function without any trouble whatsoever.

All pumps shall be run with the specified fluid from shut off conditions to valve wide open condition. Head developed will be checked from the discharge pressure gauge reading. Capacity may be checked from flow indicators where applicable. If flow indicators are not available in the system capacity can be checked from the volume of fluid handled (determined from level indicator reading of concerned tank) and duration of test.

During the test, the pumps and drive motors shall run smoothly without any undue vibration, flow pulsation, leakage through gland, temperature rise in the bearing parts, noise etc.

Visual check on all structural components, welding, rubber lining, and painting etc. and if doubt arises these will be tested again.

All testing and calibrating instruments and equipment shall be furnished on load basis to the satisfaction of the Purchaser/Customer.

COPYRIGHT AND CONFIDENTIAL
The information on this document is the property of BHARAT HEAVY ELECTRICALS LIMITED .
It must not be used directly or indirectly in any way detrimental to the interest of the company.

Checks on electrical items as mentioned under electrical specification.

13.0.0 QUALITY & INSPECTION

13.1.0 Quality Assurance Programme

To ensure that the equipment and services under the Scope of Contract whether manufactured or performed within the Bidder's works or at his Sub-Vendor's premises or at the Owner's site or at any other place or work are in accordance with the specifications, the Bidder shall adopt suitable quality assurance program to control such activities at all points, as necessary. Such program shall be outlined by the Bidder and shall be finally accepted by the Owner / Authorized representative after discussions before the award of Contract. The QA program shall be generally in line with ISO-9002/IS-14001. A quality assurance program of the Bidder shall generally cover the following :

System for shop manufacturing and site erection control including process controls and fabrication and assembly controls.

- Inspection and test procedure both for manufacture and field activities.
- Control of calibration and testing of measuring, testing equipment.
- System for indication and appraisal of inspection status.
- System for authorizing release of manufactured product to the Owner.
- System for handling, storage and delivery.
- Furnishing quality plans for manufacturing and field activities and detailing out the specific quality control procedure adopted for controlling the quality characteristics relevant to each item of equipment / component.

13.2.0 Quality Assurance Documents

The Bidder shall be required to submit required no. of copies of the following Quality Assurance documents as required.

1. Material mill test reports on components as specified by the specification and approved Quality Plans.
2. The inspection plan with verification, inspection plan check points, verification sketches, if used and method used to verify that the inspection and testing points in the inspection plan were performed satisfactorily.
3. Sketches and drawings used for indicating the method of traceability of the radiographs to the location on the equipment.
4. Non-destructive examination results, reports including radiography interpretation reports.
5. Factory tests results for testing required as per applicable codes and standard referred in the specification and approved Quality Plans.
6. Inspection reports duly signed by QA personnel of the Owner and Bidder for the agreed customer hold points.

During the course of inspection, the following will also be recorded.

a) When some important repair work is involved to make the job acceptable:
b) The repair work for the remaining part of the accepted product quality.

All the accepted deviations shall be included with complete technical details.

The equipment shall be guaranteed to meet performance requirements required by this specification and rectification shall be carried out until satisfactory results are obtained. The

COPYRIGHT AND CONFIDENTIAL
The information on this document is the property of BHARAT HEAVY ELECTRICALS LIMITED .
It must not be used directly or indirectly in any way detrimental to the interest of the company.

Owner reserves the right to reject the equipment should the performance values fall short of those indicated in the schedule of Technical data sheets.

In case of such option of rejection being exercised by the Owner the Bidder shall replace the faulty equipment with one which shall meet the guaranteed values.

13.3.0 Quality Plan:

Bidder to furnish Quality Plan [Supply Quality plan as well as Erection & Commissioning Quality Plan] to BHEL along with offer in their standard format for general review by BHEL.

However, after award of contract Bidder shall submit Quality plan [Both supply as well as Erection & Commissioning Quality Plan] for approval. The Quality plan shall be submitted in the BHEL quality plan format, [enclosed with job specification] . During Detailed engineering, in addition to various tests indicated in this specification, Quality plan will be reviewed with respect to standard Inspection, standard Engineering practices , applicable standards, code etc.. Accordingly, various tests required , stages of inspection and appropriate agencies for Inspection will be intimated. Bidder to abide by the same.

13.4.0 Inspection agency :

BHEL/Third Party appointed by BHEL/Customer.

The various inspection stages will be witnessed by individual agencies (or) Group of Agencies as per above, in line with approved quality plan.

14.0.0 SURFACE PREPARATION, PAINTING AND SURFACE PROTECTION:

14.1.0 Painting details are mentioned in the Job specification and the same is to be referred.

15.0.0 PACKING AND TRANSPORTATION:

All equipment shall be suitably protected, coated, covered or boxed and crated to prevent damage or deterioration during transit, handling and storage at site till the time of erection. While packing all the materials the limitations from the point of view of availability of railway wagon sizes in India should be taken into account. Bidder shall follow necessary road safety rules and shall obtain permission from highway authorities for goods movement, if the transportation in their scope. However, these aspects shall be taken into consideration in the design of the packing for the system.

16.0.0 NAME PLATES & TAG PLATES:

16.1.0 Components whose identity is important for operation and maintenance of the plant viz., all apparatus, motors, signal tapping points, instruments and control equipment, cubicles, as well as the terminal boards etc., installed shall be provided with permanently attached tag bearing the Purchaser's coding together with relevant text clearly inscribed. The tags shall be as given below.

16.2.0 A corrosion-resistant nameplate shall be attached to each unit in a clearly visible, easily accessible location. The nameplate shall be stamped with the following information:

COPYRIGHT AND CONFIDENTIAL
The information on this document is the property of BHARAT HEAVY ELECTRICALS LIMITED .
It must not be used directly or indirectly in any way detrimental to the interest of the company.

a) Manufacturer's name
b) Manufacturer's model number
c) Manufacturer's shop order number
d) Manufacturer's serial number
e) Purchaser's equipment tag number (item No.)
f) Service name
g) Weight (kg)
h) Hydrostatic test pressure, Bar. g
i) Other design information of the flow media like flow rate, temp., pressure etc.

16.3.0 Name plates shall be 3 mm (0.12") thick engraved plate of sufficient rigidity with lettering of a minimum height of 4 mm (0.16"). The method of implementation and labeling will be informed for all components after award of contract.

16.4.0 Identification tags shall be provided and placed on all Bidder furnished valves, instruments and others. Tags shall be corrosion resistance, having a larger than diameter of 3 cm, and shall have black identification figures stamped thereon. Figure height shall be larger than 0.5 cm. Tags shall bear the component system designation symbol shown on the Bidder's drawings

17.0.0 SUB VENDORS:

Bidder to abide by the Customer approved sub vendors list enclosed with job specification. However, for items which are not listed Bidder may follow his standard vendors.

18.0.0 GENERAL:

Even though, the requirements are specified in detail to the extent possible, bidder to Apply good engineering practices in the design, selection of equipment, fabrication, Painting, inspection & testing, dispatch of the system, wherever same is not clearly spelt Out.

Compliance with this specification shall not relieve bidder of the responsibility of Furnishing material and workmanship to meet the specified conditions. Accordingly, Bidder to furnish their comments if any on this speciation in their offer.

19.0.0 PROPOSAL EXHIBIT SHEETS

Instructions to Bidder for submitting technical proposal:

The bidder may provide technical proposal as per his convenience. However, following things are to be ensured:

A list of deviations or exceptions, if any, to Technical specification PY51199, Job Specification and its enclosures including reference documents as attached shall be provided as per Annexure-IV

It is hereby informed that only those deviations which are listed by the bidder in Annexure-IV and subsequently accepted by BHEL will be considered for evaluation of the bid and for finalisation of the order. No other deviations or exceptions even if mentioned elsewhere will be considered for any technical/ commercial evaluation or for ordering.

Bidder will need to sign Annexure- IV specifically endorsing the above understanding.

COPYRIGHT AND CONFIDENTIAL
The information on this document is the property of BHARAT HEAVY ELECTRICALS LIMITED.
It must not be used directly or indirectly in any way detrimental to the interest of the company.

ANNEXURE – I

KEY INFORMATION

1.00.00 Name of the Bidding Company :

2.00.00 Registered in (mention the name of the Country) :

3.00.00 Name, designation, telex & telephone number and postal address of responsible officer of Bidder to whom all reference shall be made for expeditious coordination. :

4.00.00 Name, designation, telex & telephone number and postal address of responsible officer of Indian Agent. :

5.00.00 Bidder's proposal number :

6.00.00 Bidder's proposal date :

7.00.00 Validity of offer, counted from the date of opening of bid :

8.00.00 Guaranteed completion period, counted from date of issuance of LOI/TOI :

9.00.00 Confirm that Scope of supply and services are exactly as per specification requirement. : Yes/No

10.00.00 Confirm Technical Compliance with Specification : Yes/No

11.00.00 Confirm that Guarantees are as per Job Specification : Yes/No

12.00.00 Confirm that List of Recommended Spares has been furnished as per Annexure-II : Yes/No

13.00.00 Confirm that List of Special Tools & Tackles has been furnished as per Annexure-III : Yes/No

14.00.0 Confirm that deviations ,if applicable, have been furnished as per Annexure-IV : Yes/No

Signature of Bidder's
Authorized representative .with date.....

Date.....

COPYRIGHT AND CONFIDENTIAL
The information on this document is the property of BHARAT HEAVY ELECTRICALS LIMITED .
It must not be used directly or indirectly in any way detrimental to the interest of the company.

ANNEXURE – II

IST OF RECOMMENDED SPARE PARTS

Bidder shall tabulate in the proforma below list of all spare parts as recommended by the respective manufacturer for regular, reliable operation. In case the Bidder has to add any other relevant information, the same shall be indicated herein. Continuation sheets of like size and format may be used as per Bidder's requirements.

Sl. No	D e s c r I p t I o n	Quantity	Unit Price	Total Price	Delivery Period	Remarks

ANNEXURE –III

SPECIAL TOOLS AND TACKLE

Bidder shall list the tools and tackles required for operation, maintenance and replacement of equipment and component and being supplied under the specification.

Sl.No.	Description	Quantity	Remarks
a			
b			
c			
d			

COPYRIGHT AND CONFIDENTIAL
The information on this document is the property of BHARAT HEAVY ELECTRICALS LIMITED .
It must not be used directly or indirectly in any way detrimental to the interest of the company.

COPYRIGHT AND CONFIDENTIAL
The information on this document is the property of BHARAT HEAVY ELECTRICALS LIMITED .
It must not be used directly or indirectly in any way detrimental to the interest of the company.

ANNEXURE – IV

DEVIATION FROM SPECIFICATION

If the proposal submitted has got any deviation from the technical stipulations in the bidding document, the Bidder shall tabulate below the full particulars of such deviations and shall sign below. Additional sheets may be enclosed, if necessary. Deviation is to be furnished with mention of specific clause numbers. Technical and commercial deviations to scope of supply and services, shall be indicated separately. Bidders shall bring put only those deviations which are impractical to meet (or) not advisable

Sl.No.	CLAUSE NO.	DESCRIPTION AS PER SPECIFICATION	DEVIATION BY BIDDER

We confirm that all the deviations/exceptions to the Technical Specification PY51199, Job Specification and enclosures including reference documents attached are listed in this Annexure only. No other deviations or exceptions even if mentioned elsewhere shall be considered for any technical/ commercial evaluation or for ordering.

Signature of Bidder's
Authorized representative .with date.....

Date .....

COPYRIGHT AND CONFIDENTIAL
The information on this document is the property of BHARAT HEAVY ELECTRICALS LIMITED .
It must not be used directly or indirectly in any way detrimental to the interest of the company.

VARIANT TABLE - I

Var. No	Item	Filtration plant cap. (m^3/hr.)	RO plant cap. (m^3/hr.)	DM Plant Capacity (m^3/hr)	Matl. Code	Ref. docs /drgs
01	MB Unit & Associated system	SSF capacity 100 m^3/hr. (2 x 50%)	NA	Mixed bed Capacity 95 m^3/hr (2x100%).	PY9751199018	ONGC_HAZIRA PEMC-06165
02	Erection & Commissioning of Mixed Bed Unit& Associated system		NA		PY9851199028	
03	Side stream filtration system for CW	SSF capacity 204 m^3/hr. (2 x 50%)	NA	NA	PY9751199034	TATA STEEL 1 X 40 MW STG / PEMC-06864
04	E&C for side stream filtration system of CW		NA	NA	PY9851199044	
05	Mixed Bed (DM Polishing Unit) & SSF	SSF capacity 100 m^3/hr. (2 x 50%)	NA	Mixed bed Capacity 95 m^3/hr. (2x100%).	PY9751199069	ONGC_HAZIRA PEMC-06165
06	E&C of Mixed Bed (DM Polishing Unit) & SSF		NA		PY9751199077	
07	Mandatory spares for DM Polishing Unit & SSF		NA		PY9751199050	

COPYRIGHT AND CONFIDENTIAL
The information on this document is the property of BHARAT HEAVY ELECTRICALS LIMITED .
It must not be used directly or indirectly in any way detrimental to the interest of the company.

RECORD OF REVISIONS

Rev. No.	Date	Revision Details	Prepared/ Revised By	Approved By
00	04.08.15	Original Issue	CHP	AKS
01	01.09.16	Variant 03, 04 added.	CHP	AKS
02	12.11.16	Variant 05, 06, 07 added.	CHP	AKS

Sl.No.	Description PART I	Scope / to be taken care by		*Remarks*
		BHEL	**Bidder**	
3.1	**ESTABLISHMENT**		**YES**	
3.1.1	**FOR CONSTRUCTION PURPOSE**:			
a	OFFICE	**YES**		**Chargeable. Land for office construction shall be provided by BHEL/ONGC on chargeable basis @ Rs. 5.00 per Sq M.**
b	Open space for storage (as per availability)	**YES**		**Chargeable. Land for Storage yard shall be provided by BHEL/ONGC on chargeable basis @ Rs. 5.00 per Sq M.**
c	Construction of bidder's office, canteen and storage building including supply of materials and other services		Yes	
d	Bidder's all office equipments, office / store / canteen consumables		Yes	
e	Canteen facilities for the bidder's staff, supervisors and engineers etc		Yes	
f	Fire fighting equipments like buckets, extinguishers etc		Yes	
g	Fencing of storage area, office, canteen etc of the bidder		Yes	
3.1.2	**FOR LIVING PURPOSES OF THE BIDDER**			
a	Open space for labor colony (as per availability)		Yes	
b	Labor Colony with internal roads, sanitation, complying with statutory requirements		Yes	
3.2.0	**ELECTRICITY**			
3.2.1	**Electricity for construction purposes3 Phase** 415/440 V **(To be specified whether chargeable or free)**			**Chargeable @ Rs 5 per KWH.**
a	Single point source	**YES**		
b	Further distribution including all materials, Energy Meter, Protection devices and its service		Yes	

Sl.No.	Description PART I	Scope / to be taken care by		*Remarks*
		BHEL	Bidder	
c	Duties and deposits including statutory clearances if applicable		Yes	
3.2.2	**Electricity for the office, stores, canteen etc of the bidder(to be specified whether chargeable or free)**			**Chargeable @ Rs 5 per KWH.**
a	Single point source	**YES**		
b	Further distribution including all materials, Energy Meter, Protection devices and its service		Yes	
c	Duties and deposits including statutory clearances if applicable		Yes	
3.2.3	**Electricity for living accommodation of the bidder's staff, engineers, supervisors etc**		Yes	
a	Single point source		Yes	
b	Further distribution including all materials, Energy Meter, Protection devices and its service		Yes	
c	Duties and deposits including statutory clearances if applicable		Yes	
3.3.0	**WATER SUPPLY**			
3.3.1	**For construction purposes:(to be specified whether chargeable or free)**			**Chargeable @ Rs 9 per CuM**
a	Making the water available at single point	**YES**		
b	Further distribution as per the requirement of work including supply of materials and execution		Yes	
3.3.2	**Water supply for bidder's office, stores, canteen etc**			
a	Making the water available at single point	**YES**		
b	Further distribution as per the requirement of work including supply of materials and execution		Yes	
3.3.3	**Water supply for Living Purpose**			
a	Making the water available at single point		Yes	
b	Further distribution as per the requirement of work including supply of materials and execution		Yes	
3.4.0	**LIGHTING**			

Sl.No.	Description PART I	Scope / to be taken care by		*Remarks*
		BHEL	**Bidder**	
a	For construction work (supply of all the necessary materials) 1. At office/storage area 2. At the preassembly area 3. At the construction site /area		Yes	
b	For construction work (execution of the lighting work/ arrangements) 1. At office/storage area 2. At the preassembly area 3 At the construction site /area		Yes	
c	Providing the necessary consumables like bulbs, switches, etc during the course of project work		Yes	
d	Lighting for the living purposes of the bidder at the colony / quarters		Yes	
3.5.0	**COMMUNICATION FACILITIES FOR SITE OPERATIONS OF THE BIDDER**			
a	Téléphone, fax, internet, intranet, e-mail etc.		Yes	
3.6.0	**COMPRESSED AIR wherever required for the work**		Yes	
3.7.0	**Demobilization of all the above facilities**		**YES**	
3.8.0	**TRANSPORTATION**			
a	For site personnel of the bidder		Yes	
b	For bidder's equipment and consumables (T&P, Consumables etc)		Yes	

7.13.7 Vessels, Tanks and heat exchanger

All pressure vessels shall be designed in accordance with ASME Boiler and Pressure Vessel, Section VIII Unfired Pressure Vessels. All butt welds shall be subject to radiography test as per ASME relevant code and all other welds shall be subject to 100% non destructive testing. Other standards the Contractor intends to use are to prior approval of the Owner/ Owner's representative. All flanged connections to pressure vessels shall conform to at least pressure class 150. Threaded connections shall conform to pressure class 300. MPP supplied vessels, tank and heat exchangers shall be as per MPP standards.

All connections shall match for pipe instrumentation, drains and relief valves. All bolt holes must straddle the centre line of nozzles. Access stairways and handrails necessary for safe operation and easy maintenance shall be provided. Corrosion allowance shall be considered for carbon steel material. However, in case of coating or rubber lining or SS material, corrosion allowance will not be applicable.

If any degree of vacuum may occur the pressure vessel or tank shall be designed for full vacuum even if vacuum breakers are installed.

The items listed below shall be provided as a minimum.

- One(1) manhole (minimum nominal bore 600 mm) for vessels of 1.0 meter diameter and above
- Two(2) handholes (minimum size 200 mm) for vessels below 1.0 meter diameter.
- Two(2) spare nozzles
- One(1) drain nozzle

Manhole covers shall be provided with davit arrangement.

The saddle and reinforcing plates welded to the vessel shall be of the same material as the vessel shell or head. Insulated vertical vessels and tanks shall be furnished with insulation supports or clips.

Tanks

Unless otherwise specified, tanks used for the storage, lubricating oil, make-up water, condensate, chemicals. and tanks used for mixing and agitation shall be of welded construction, manufactured from mild steel plates of accepted quality and thickness in accordance with the approved relevant standards.

All welds shall be continuous, including welds around internal stays, stiffeners and supports.

All large tanks shall have at least two manholes each of 600 mm inner diameter complete with covers of the bolted type, fitted with a davit for easy handling.

All tank nozzles shall be provided with flanges, if not otherwise specified.

Nozzles shall be provided where necessary for the fitting of instruments, and piping.

Internal and external protection coating/painting of the tanks shall be performed according to the requirements of this Contract.

Arrangements shall be made for the blanking-off or removal of all valves or pipe connections during shot-blasting and painting to prevent the ingress of blasting material or other matter.

The protective process shall be applied also to any ferrous or non-ferrous parts mounted inside the tanks.

Heat exchanger

Heat exchangers are to be designed, manufactured and erected in accordance with the applicable standards.

Only proven products shall be delivered. No cast iron components are permitted.

It must be possible to install and remove the heat exchangers without undue difficulty. Lifting lugs and eyes and other special tackle shall be provided to permit easy handling.

Only Tubular heat exchangers are acceptable. Where necessary the tubes are to be protected by impact shields. An adequate number of visual inspection ports is to be provided in critical areas to facilitate condition monitoring.

Unless otherwise specified, all heat exchanger tubes and casings must be designed to withstand 1.2 times the zero flow pressure of the relevant pump at cold conditions, or 1.2 times of the maximum positive operating pressure, as applicable. The minimum design pressure is 6 bar, and the design shall be proof against full vacuum. The test pressure must be 1.5 times the design pressure.

The heat exchangers shall be designed for the maximum temperature incurred plus 20 K except for MPP Supplied Heat exchangers. For MPP supplied heat exchangers the design temperature shall be as per MPP standard design philosophy.

Heat exchangers must be capable of continuous unrestricted operation with up to 10% of plugged tubes, and a corresponding factor of conservatism of at least this amount must be used in the design of the heat transfer areas. However, plug margin for Condenser shall be as per Detailed Technical Specification (DTS).

Considerable importance will be attached to the ease of cleaning the heat exchangers.

Where any heat exchanger part in contact with liquid can be isolated, and there is a possibility of being heated from the other side, safety valves are to be provided for pressure relief.

Pipes from drains, vents and safety valves are to be grouped together, and routed to easily observable points equipped with covered funnels or to the flash tanks.

The overall design and conception of the heat exchangers and accessories is to be such that they are suitable for the degree of automation envisaged for the individual system.

7.13.8 Cranes and Hoists

Cranes and hoists are to be designed in accordance with the applicable Indian and International Standards.

The crane installations must be supplied with all the ropes, chains, shackles. needed for operation.

The minimum scope of supply per hoist for each lifting tackle includes the following items:

- four (4) single ropes each with 2 eyes at the ends, each rope 1 m long
- four (4) single ropes each with 2 eyes at the ends, each rope 2 m long

SUB-SECTION – 2.15

SURFACE PREPARATION AND PAINTING

CONTENTS

CLAUSE NO.	DESCRIPTION	SHEET NO.
1.0.0	SURFACE PREPARATION	331
2.0.0	SCHEDULE OF PRIMER & FINISH COATS	337
3.0.0	PAINT SYSTEM	342

SUB-SECTION – 2.15

SURFACE PREPARATION AND PAINTING

1.0.0 SURFACE PREPARATION

1.1.0 General

This specification covers the general requirements related to the cleaning protective coating and painting of equipment, component and system. The components and/or equipment shall be mechanically and / or chemically cleaned during the following stages of the Contract.

- Cleaning in workshop.
- Cleaning before painting and / or corrosion protection (application of prime coat).
- Cleaning before erection and during installation.

Cleaning of fabricated component items shall be carried out after fabrication and final heat treatment of welding at manufacturer's work or at site, as appropriate.

For cleaning in workshop and before painting mechanical cleaning as opposed to alternative chemical cleaning is the preferred method of for works cleaning except where this is precluded by design or access considerations.

Mechanical surfaces shall be protected during the cleaning operations.

In the event of the surfaces not being cleaned to the purchaser's satisfaction, such parts of the cleaning procedures or agreed alternatives as are deemed necessary to overcome the deficiencies shall be carried out at the supplier's sole expense.

For reclining small areas, hand cleaning by wire brushing may be permitted wire brushless used on austenitic steel bristles.

Austenitic stainless steels, copper and aluminium alloys, cast iron, bimetallic and metallic / plastic items, and components fabricated by spot welding or riveting shall not be chemically cleaned. All weld areas shall be suitably stress relieved before chemical cleaning.

various international standards equivalent to Swedish standard for surface preparation are given in Table-1.

The contractor shall arrange at his own cost, to keep a set of latest edition of the above standards and codes at site.

The paint manufacturer's instruction shall be followed as afar as practicable at all times. Particular attention shall be paid to the following.

a) Proper storage to avoid exposure as well as extremes of temperature.
b) Surface preparation prior to painting.
c) Mixing and thinning.
d) Application of paints and the recommended limit on the intervals between coats.
e) Shelf life for storage.

Any painting work (including surface preparation) on piping or equipment shall be commenced only after the system tests have been completed and clearance for taking up painting work is given by the Engineer, who may, however, at his discretion authorise in writing, the taking up of surface preparation of painting work in any specific location, even prior to completion of system test.

1.2.0 **Tools & Tackles**

All tools, brushes, rollers, spray guns, blast material, hand power tools for cleaning and all equipment, scaffolding materials, shot/sand blasting equipment and air compressor etc. shall be arranged by the contractor at the site in sufficient quantity at his own cost. He shall arrange to his own cost, for suitable paint thickness measuring instrument like Elkometers acceptable to the Engineer (with calibration facilities).

Mechanical mixing shall be used for paint mixing operation in case of two pack systems except that the Engineer may allow the hand mixing of small quantities at his discretion.

1.3.0 **Mechanical Cleaning at Manufacturer's Works**

Mechanical cleaning shall preferably be carried out by abrasive blasting. The Purchaser is prepared to consider alternative methods provided they achieve the necessary surface condition.

1.3.1 **Surface condition**

The Metal surfaces shall be clean and free of mill scale, rust dirt, grease and any other deleterious matter.

Where metal surfaces are to be painted the surface profiles shall conform with the painting specification requirements.

Where this does not apply surfaces shall have a surface texture not coarser than Grade 80 abrasive paper.

1.3.2 **Abrasives**

Abrasives containing silica, silicates of slag, residues shall not be used for water/steam side surfaces of plant except for cleaning sand castings, where hydro blasting with sand may be used.

For austenitic materials only abrasives containing 98% or more of aluminia, $Al_2 O_3$, shall be used.

1.3.3 **Removal of abrasive and debris**:

After cleaning abrasive and debris shall be thoroughly removed from components.

1.3.4 **Alternative Chemical Cleaning at Manufacturer's Works**

The procedure shall comprise of Pre-treatment and Acid treatment.

To achieve cleanliness equivalent to that specified for mechanical cleaning. The procedure to be adopted must meet with the purchaser's approval.

1.3.5 **Protection at Manufacturer's Works**

As soon as all items have been cleaned and within four hours of the subsequent drying, they shall be given suitable anti-corrosion protection.

All water, air and steam side surfaces shall be protected by the application of approved water soluble corrosion inhibitors, or vapour phase inhibitors that can be subsequently removed by site water washing or steam blowing.

The rate of application of volatile corrosion inhibitors shall be at least 10 grams per square metre or 35 grams per cubic metre, whichever is the greater, except for pipes up to 300 mm diameter for which the minimum application rates shall be 5 grams per square metre.

Immediately after the protective treatment has been applied all vessels and pipes shall be suitably sealed off by discs or caps or approved alternatives to prevent ingress from the surrounds Cylindrical plugs shall not be drive into the ends of pipes. These protective covers shall not be removed until immediately before final connection is made to the associated equipment.

1.4.0 **Weather Conditions**

Painting shall be done only when the surface temperature is above 5°C surface temperature must be at least 3°C above dewpoint to ensure that condensation does not occur on the surface.

Reasonable protection against precipitation, corrosive fumes and vapours shall be exercised for the painting of outdoor parts.

Precautions shall also be taken against solar radiation to ensure that the specified dry film thickness of priming of finish coats is obtained.

Any prime coat exposed to excess humidity, rain, dust etc. before drying, shall be permitted to dry & the damaged area of primer shall be removed and the surface prepared & primed again.

Sheltered or unventilated horizontal surfaces on which dew may collect require more protection, and to achieve this an additional top coat of paint shall be applied.

1.5.0 **Surface Preparation**

In preparing any surface to be coated, all loose paint, dirt, grease, rust, scale, weld slag or spatter or any other extraneous material shall be removed and defects repaired so as to obtain a clean, dry, even surface to receive the priming or finishing coat(s) as called for in the painting schedules. Sharp adges should be rounded especially when tank linings have to be applied.

All machined surfaces, including flange faces, shall be suitably covered to prevent damage during surface preparation.
All surface should be blast cleaned whenever possible.

1.5.1 **Surface preparation methods.**

Bare steel surfaces should be prepared by one of the methods described below in order of preference and in accordance with Swedish Standard SIS 05 5900 or Steel Structures Painting Council, SSPC, Vis1,or DIN 55928, section 4.

1.5.1.1 **White metal blast cleaning**: Sa 3 or SSPC - SP 5

Sa 3 Blast cleaning to bare metal, Mill scale, rust and foreign matter must be removed completely. Subsequently, the surface is cleaned with vacuum cleaner, clean dry compressed air or a clean brush. It must then have a uniform metallic colour & correspond in appearance to the prints designated Sa 3.

1.5.1.2 **Near white metal blast cleaning** Sa 2 1/2 or SSPC - SP 10

Sa 2 1/2. Very thorough blast cleaning. Mill scale, rust and foreign matter shall be removed to the extent that the only traces remaining are slight imperfections in the form of spots or stripes. Subsequently, the surface is cleaned with a vacuum cleaner, clean dry compressed air or a clean brush. It must then correspond in appearance to the prints designated Sa 2 1/2.

Mechanical cleaning should only be used when procedures (a) and (b) are not practicable.

1.5.1.3 **Commercial Blast Cleaning** Sa 2

Sa 2 Blast cleaning until atleast two-thirds of each element of surface area is free of all visible residues. This method of Blasting is suitable for steel required to be painted with conventional paints for exposure to mildly corrosive atmosphere for longer life of the paint system.

1.5.1.4 **Near white metal blast cleaning** P Sa 2 1/2 DIN 55928

Very thorough blast cleaning. Very adhesive coatings remain. From all other surface mill scale and rust are to be removed to such an extent that the only traces remaining are slight imperfections in the form of spots or stripes. Further treatment see Sub b).

1.5.1.5 **Very thorough mechanical scraping and wire brushing** St 3

St 3 very thorough scraping and wire-brushing - machine brushing - grinding - etc. are to be preferred. Surface preparation as for St 2. But much more thoroughly. After the removal of dust, the surface must have a pronounced metallic sheen and correspond to the prints designated St. 3.

1.5.1.6 **Thorough scraping and wire brushing**: St 2

St 2 Thorough scraping and wire-brushing - machine brushing - grinding - etc. The treatment shall remove loose mill scale, rust and foreign matter. Subsequently, the surface is cleaned with a vacuum cleaner, clean dry compressed air or a clean brush. It should then have a faint metallic sheen. The appearance must correspond to the prints designated St 2.

Table -1 (Surface Preparation Standards)

Surface preparation methods	**SIS 055900**	**DIN 55928, Part-4**	**BS 4232 only for blasting**	**SSPC-Vis**
Blasting ACC to item (a)	Sa 3		First quality	White metal SP 5
Blasting ACC to item (b)	Sa 2 1/2		Second near quality	White SP 10
Blasting ACC to item (c)	Sa 2		Third quality	Commercial blast SP 6
Hand / or power tool derusting ACC to item (f)	St 2		--	Hand tool cleaning SP 2
ACC to items (e)	St 3		--	Power tool cleaning SP 3
Flame jet cleaning		F1	--	Flame cleaning SP 4
Pickling		Be	--	Pickling

Steel structures to be blast cleaned have to be free of pitting and other severely corroded places in accordance with B.S. 4232 and SIS 055900.

The abrasives used for blast-cleaning shall be graded flint, grit, shot or silica sand and shall be such that they will produce an average keying profile on the blast-cleaned surface of not more than 40 microns.

An air pressure of 7 bar (g) at the nozzle shall be used.

After blast-cleaning all accumulated grit, sand, dust etc. must be removed leaving the surface clean, dry and free of mill scale, rust grease and other foreign matter.

In the event of rusting after completion of the surface preparation, the surface must be cleaned again in the manner specified.

Oil, grease, soil, cement, salts, acids or other corrosive chemicals shall be cleaned from steel surfaces, by the use of solvents, emulsions or cleaning compounds. The final wiping shall be with clean solvent and clean rags or brushes. There shall be no detrimental residue left on the surface.

Primed areas which suffer damage must be spot blasted on site to a degree of cleanliness P Sa 2 1/2 before touching up.

Protective coating must be applied as quickly as possible after the completion of surface preparation no matter what cleaning method has been used.

No blast-cleaned surface shall be allowed to remain uncoated overnight.

Steel work protected by shop primer after arrival on site must be cleaned of salt, sand, oil etc. before the coat of paint is applied on site. Shop primer damaged during transport must be rectified by blast-cleaning and coating before application of the site coats.

Wood surfaces shall be sanded clean. All nail holes shall be puttied and sanded before priming.

Concrete: If a protective coating is required, concrete shall be allowed to cure before painting.

1.5.2 Rub Down and Touch up of Primer

The shop coated surfaces shall be rubbed down thoroughly with emery paper to remove all dust, rust and other foreign matters, washed, degreased, then cleaned with warm fresh water and air dried. The portions, from where the shop coat has peeled off, shall be touched up and allowed to dry before applying a coat of primer. The compatibility between shop coat and field primer should be ascertained from the paint manufacturer. In case degreasing with white spirits is not effective, the surface should be finally wiped clean with aromatic solvent like xylol or light naphtha.

1.5.3 Non Compatible Shop Primer

The compatibility of finishing coat should be confirmed from the paint manufacturer. In the event of use of primer such as zinc rich epoxy, inorganic zinc silicate etc., the paint system shall depend on condition of shop coat. If the shop coat is in satisfactory condition showing no major defect, the shop coat shall not be removed. The touch up primer and finishing coat(s) shall be identified for application by Engineer.

Shop coated (coated with primer & finishing coat) equipment shall not be repainted unless paint is damaged.

Shop primed equipment and surfaces shall only be spot cleaned in damaged areas by means of power tool brush cleaning or hand tool cleaning and then spot primed before applying one coat of field primer unless otherwise specified. If shop primer is not compatible with field primer then shop coated primer shall be completely removed before application of selected paint system for particular environment.

For package units / equipment, shop primer shall be as per the paint system given for particular environment.

In case of existing paint, compatibility between finishing coat and new selected finish coat shall be ascertained before application of finish coat. In case the coat is selected for upgrading existing alkyd coating to high performance coating, then surface preparation can be by manual / mechanical means to remove loose rust, peeled off/damaged paint, but sound old coating need not be removed. It should be touched with red oxide zinc chromate primer wherever it has peeled of before application of the coat. The tie coat shall be applied after 7 days of curing of red oxide zinc chromate primer. If new paint system is not suitable to upgrade existing coating then complete paint shall be removed by mechanical or blast cleaning before application of new coating system.

2.0.0 SCHEDULE OF PRIMER & FINISH COATS

2.1.0 PRIMERS

P-1 Red Oxide zinc chromate primer
P-2 High build chlorinated rubber zinc phosphate primer
P-3 High build zinc phosphate primer
P-4 Etch primer/wash primer
P-5 Epoxy zinc chromate primer
P-6 Epoxy zinc phosphate primer
P-7 Epoxy high build mio paint
P-8 Epoxy red oxide zinc phosphate primer
P-9 Epoxy based tie coat finish coats
P-10 Inorganic zinc silicate coating.

2.2.0 FINISH COATS

F-1 Synthetic enamel
F-2 Acrylic polyurethane paint
F-3 Chlorinated rubber paint
F-4 High build chlorinated rubber mio paint
F-5 Chemical resistant phenolic based enamel
F-6 Epoxy high build coating
F-7 High build coal tar epoxy
F-8 Self priming epoxy high build coating
F-9 High build black
F-10 Heat resistant aluminium paint suitable upto 250°c
F-11 Heat resistant silicone paint suitable upto 400°c
F-12 Synthetic rubber based aluminium paint suitable upto 150°c
F-13 Heat resistant silicone paint suitable upto 600°c

2.3.0 PRIMER

a) Primer (P-1) Red oxide zinc chromate primer

Type and composition	:	Single pack modified phenolic alkyd medium pigmented with red oxide and zinc chromate
Volume solids	:	30 - 35%
DFT	:	20 ~ 40 microns/coat (min)
Covering capacity	:	11-13 sq. m/Lit/coat

b) Primer (P-2) High build chlorinated rubber zinc phosphate primer

Type and composition	:	Single pack Chlorinated rubber medium plasticised with unsaponifiable plasticiser pigmented with zinc phosphate
Volume solids	:	35-40%

DFT	:	50 microns/coat (min).
Covering capacity	:	7-8 sq. m/lit/coat

c) **Primer (P-3)** High build zinc phosphate primer

Type and composition	:	Single pack Synthetic medium, pigmented with zinc phosphate
Volume solids	:	40 - 45%
DFT	:	35 - 50 microns/coat
Covering capacity	:	10 - 12 sq. m/lit/coat
Heat resistant	:	Upto 100 ^{0}C (dry)

d) **Primer (P-4)** Etch primer / Wash primer

Type and composition	:	Two pack of Polyvinyl butyl resin medium cured with phosphoric acid solution pigmented with zinc tetroxy chromate
Volume solids	:	7 - 8%
DFT	:	8 - 10 microns/coat
Covering capacity	:	7 - 8 sq. m/lit/coat

e) **Primer (P-5)** Epoxy zinc chromate primer

Type and composition	:	Two pack of Polyamide cured epoxy resin medium pigmented with zinc chromate
Volume solids	:	40% (min.)
DFT	:	35 microns/coat
Covering capacity	:	11 - 12 sq. m/lit/coat

f) **Primer (P-6)** Epoxy zinc phosphate primer

Type and composition	:	Two pack of Polyamide cured epoxy resin medium pigmented with zinc phosphate
Volume solids	:	40% (min)
DFT	:	35 microns/coat (min)
Covering capacity	:	11 - 12 sq. m/lit/coat

g) **Primer (P-7)** Epoxy high build MIO paint (Intermediate coat)

Type and composition	:	Two pack of Polyamide cured epoxy resin medium pigmented with micaceous iron oxide
Volume solids	:	50% (min)
DFT	:	100 microns/coat (min)
Covering capacity	:	5.0 sq. m/lit/coat

h) **Primer (P-8)** Epoxy red oxide zinc phosphate primer

Type and composition	:	Two pack of Polyamide cured epoxy resin medium pigmented with red oxide and zinc phosphate
Volume solids	:	42% (min)
DFT	:	30 microns/coat (min)
Covering capacity	:	13 - 14 sq. m/lit/coat

i) **Primer (P-9)** Epoxy based tie coat

(Suitable for conventional alkyd based coating prior to application of acrylic polyurethane / epoxy finishing coat).

Type and composition	:	Two pack of Polyamide cured epoxy resin medium suitably pigmented
Volume solids	:	45-60%
DFT	:	40 microns/coat (min)
Covering capacity	:	10 - 12 sq. m/lit/coat

j) **Primer (P-10)** Inorganic Zinc silicate coating

Type and composition	:	Two pack of Self cured Ethyl - silicate solvent based Inorganic Zinc coating.
Volume solids	:	60% (min)
DFT	:	65-75 microns/coat
Covering capacity	:	8-9 sq.m./lit/coat

2.4.0 **FINISH COATS**

a) **Finish coat (F-1)** Synthetic Enamel

Type and composition	:	Single pack Alkyl medium pigmented with superior quality water & weather resistant pigments
Volume solids	:	30 - 40%
DFT	:	20 - 25 microns/coat (min)
Covering capacity	:	16 - 18 sq. m/lit/coat

b) **Finish coat (F-2)** Acrylic Polyurethane paint

Type and composition	:	Two pack Acrylic resin and isocyanate hardener suitably pigmented.
Volume solids	:	40 % (min)
DFT	:	30-40 microns/coat
Covering capacity	:	10-12 sq.m./lit/coat

c) **Finish Coat (F-3)** Chlorinated Rubber paint

Type and composition	:	Single pack Plasticised chlorinated rubber medium with chemical & weather resistant pigments.
Volume solids	:	30 % (min)
DFT	:	30 microns/coat (min)
Covering capacity	:	10 sq.m./lit/coat

d) **Finish Coat (F-4)** High build chlorinated rubber MIO paint.

Type and composition	:	Single pack Chlorinated rubber based high build pigmented with micaceous iron oxide.
Volume solids	:	40-50 %
DFT	:	65-75 microns/coat
Covering capacity	:	6-7 sq.m./lit/coat

e) **Finish Coat (F-5)** Chemical Resistant Phenolic based Enamel

Type and composition	:	Single pack Phenolic medium suitably pigmented.
Volume solids	:	30-40%
DFT	:	25 microns/coat (min)
Covering capacity	:	15 sq.m./lit/coat

f) **Finish Coat (F-6)** Epoxy High Building Coating

Type and composition	:	Two pack Polyamide cured epoxy resin medium suitably pigmented.
Volume solids	:	55-65%
DFT	:	100 microns/coat (min)
Covering capacity	:	6.0-6.5 sq.m./lit/coat

g) **Finish Coat (F-7)** High build coal tar Epoxy.

Type and composition	:	Two pack Polyamine cured epoxy resin blended with coal tar.
Volume solids	:	65 % (min)
DFT	:	80-125 microns/coat
Covering capacity	:	6.0-6.5 sq.m./lit/coat

h) **Finish Coat (F-8)** Self priming epoxy high build coating (complete rust control coating)

Type and composition	:	Two pack Polyamido-amine cured epoxy resin suitably pigmented. Capable of adhering to manual prepared surface and old coatings.
Volume solids	:	65-85%
DFT	:	100-125 microns/coat
Covering capacity	:	4-5 sq.m./lit/coat

i) **Finish Coat (F-9)** High build black.

Type and composition	:	Single pack Reinforced Bituminous composition phenolic based resin.
Volume solids	:	55 - 66 % (min)
DFT	:	100 microns/coat (min)
Covering capacity	:	5.5 – 6.0 sq.m./lit/coat

j) **Finish Coat (F-10)** Heat Resistant Aluminium Paint Suitable upto 250°C

Type and composition	:	Dual container (paste & medium) Heat resistant special Ole Ore resinous medium with leafing aluminium.
Volume solids	:	20 - 25 %
DFT	:	20 microns/coat (min)
Covering capacity	:	10 - 12 sq.m./lit/coat

k) **Finish Coat (F-11)** Heat Resistant Silicon paint suitable 250 - 400°C.

Type and composition	:	Single pack of Silicon resin based with aluminium flakes
Volume solids	:	15-25 %
DFT	:	20 microns/coat (min)
Covering capacity	:	7-12 sq.m./lit/coat

l) **Finish Coat (F-12)** Synthetic Rubber Based Aluminium Paint suitable upto 150°C.

Type and composition	:	Single pack of Synthetic rubber medium combined with leafing Aluminium.
DFT	:	20-25 microns/coat (min)
Covering capacity	:	9.5 sq.m./lit/coat

m) **Finish Coat (F-13)** Heat Resistant Silicon paint suitable 500 - 600°C

Type and composition	:	Single pack of Silicon resin based with aluminium flakes.
Volume solids	:	25-35%
DFT	:	20 - 25 microns/coat (min)
Covering capacity	:	12 - 14 sq.m./lit/coat

3.0.0 PAINT SYSTEM

SL. NO.	SURFACE/LOCATION	TEMP. °C	SURFACE PREPARATION	PAINT SYSTEM			PER COAT MICRONS Dft	APPLICATION	
				COAT	NO. OF COATS	GENERIC TYPE		IN SHOP	ON SITE
1	Structural steel work, piping (oil + water) tanks outside surface, transmission towers, cranes, steel floors, galleries, stairways, outdoor.	upto 130°C	Sa 2½	Prime	2	P6	35	x	
							35	x	
				Intermediate	1	P7	100		x
				Finish	1	F2	50		x
						Total DFT	**220**		
2	Structural steel work, piping, indoor and outdoor	130 to 200°C	Sa 2½	Prime	1	F9	75	x	
				Intermediate	1	F9	20		x
				Finish	2	F11	20		x
							20		x
						Total DFT	**135**		
3	Structural steelwork, piping, un-insulated carbon steel, indoor and outdoor	200 to 400°C	Sa 3	Prime	1	F9	75	x	
				Intermediate	1	F12	20		x
				Finish	1	F12	**20**		x
						Total DFT	**115**		
4	Structural steel work, piping (oil + water), tanks, indoor	upto 130°C	Sa 2½	Prime	2	P6	35	x	
							35	x	
				Finish	1	F6	100		x
						Total DFT	**170**		

SL. NO.	SURFACE/LOCATION	TEMP. °C	SURFACE PREPARATION	PAINT SYSTEM			PER COAT MICRONS Dft	APPLICATION	
				COAT	NO. OF COATS	GENERIC TYPE		IN SHOP	ON SITE
5 (a)	Structural steel work in the battery rooms, Chlorination plant and water treatment plant (extreme aggressive atmosphere)	Ambient	Sa 3	Prime	2	P8	30	x	
							30	x	
				Finish	2	F6	100		x
							100		x
						Total DFT	**260**		
(b)	Un-insulated - equipment, tanks and piping etc.	upto 80°C	Sa 3	Prime	2	P3	35	x	
							35	x	
				Finish	2	F6	100		x
							100		x
						Total DFT	**270**		
6	Steel tanks inside surface (total) for oil storage	normal	Sa 2½	Prime	2	P3	35	x	
							35	x	
				Finish	2	F6	100		x
							100		x
						Total DFT	**270**		
7	Steel tanks inside surface (total) for water storage (potable and distilled water)	normal	Sa 2½	Prime	2	P2	50	x	
							50	x	
				Finish	2	F3	30		x
							30		x
						Total DFT	**160**		
8	Cast iron water pipe lines-outside surface, buried in the soil	upto 60°C	Sa 3	Prime	2	P8	30	x	
							30	x	
				Finish	3	F7	125		x
							125		x
							125		x
						Total DFT	**435**		

SL. NO.	SURFACE/LOCATION	TEMP. °C	SURFACE PREPARATION	PAINT SYSTEM			PER COAT MICRONS Dft	APPLICATION	
				COAT	NO. OF COATS	GENERIC TYPE		IN SHOP	ON SITE
9	Steel pipes inside surface such as cooling water lines	upto 60°C	Sa 2½	Finish	4	F7	125		x
							125		x
							125		x
							125		x
						Total DFT	**500**		
10	Water pipelines - outside surface, indoor	upto 60°C	Sa 3	Prime	2	P2	50	x	
							50	x	
				Finish	3	F3	30		X
							30		X
							30		X
						Total DFT	**190**		
11	Oil pipelines - outside surface, above ground	upto 90°C	Sa 3	Prime	2	P3	50	x	
							50	x	
				Finish	2	F6	100		x
							100		x
						Total DFT	**300**		

3.1.0 Colour Code for Piping

The colour code scheme is intended for identification of the individual group of the pipeline. The system of colour coding consists of a ground colour and colour bands superimposed on it. The colour coding for the identification of pipelines should comply with the standard and shall submit for Owner/Owner's representative's approval. (For colour code for piping and fire equipment refer Annexure-1).

Notes :

1. Covering capacity and DFT depends on method of application. Covering capacity specified above are theoretical. Allowing the losses during application, min specified DFT should be maintained.

2. All primers and finish coats should be cold cured and air dried unless otherwise specified.

3. Selected chlorinated rubber paint should have resistance to corrosive atmosphere and suitable for marine/saline environment.

4. All paints shall conform to relevant Indian Standard and shall be applied in accordance with manufacturer's instructions for surface preparation, intervals, curing and application. The surface preparation, quality and workmanship should be ensured.

5. Technical data sheets for all paints shall be supplied at the time of submission of quotations.

6. In case of use of epoxy tie coat, manufacturer should demonstrate satisfactory test for inter coat adhesion. In case of limited availability of epoxy tie coat (P-9) alternate system may be used taking into consideration the service requirement of the system.

7. All primers should be top coated immediately as per manufacturer’s recommendations.

8. In ONGC Hazira complex no sand blasting or shot blasting shall be done. All equipment shall be protected with anti-corrosive coat and after final painting only shifted to project site for further erection. Touch – up painting for the damage area during transportation can be done at project site.

3.2.0 **Specific Requirement**

3.2.1 Following paint schedules shall be followed :

- Acid resistant paint for DM plant building / structure, neutralisation pit, battery room, other corrosive area.
- Synthetic enamel paint for Structural steel, structural sheds, window grills, hand railings, etc.
- Epoxy high build paint for DM plant equipment with piping valves.

3.2.2 All steel work not embedded in concrete to be given one coat of commercial grade zinc chromate primer before painting.

3.2.3 Synthetic enamel paint :

a) General building / structure :

- Surface preparation : ST – 2 according to Swedish standard SIS 055900
- Primer paint : Two coats of Zinc phosphate in phenolic alkyd medium (DFT = 35 microns / coat)
- Finish paint : Two coats of Synthetic enamel (DFT = 25 microns / coat) confirming IS 2932, 1974.

b) Part of steel structure embedded in concrete :

- Surface preparation : ST – 2 according to Swedish standard SIS 055900
  One coat of port land cement slurry.

c) Epoxy high building coating:

- Epoxy zinc phosphate primer : two coats of 35 DFT per coat.
- Epoxy high build coating : one coat of 100 DFT.

VOLUME - III

SUB-SECTION - 3.11

ELECTRIC MOTORS AND ACTUATORS

1.0.0 GENERAL

This specification covers the design, manufacture, supply, erection, testing and commissioning of Motors for various driven equipment and Actuators.

It is not the intent to specify completely herein all details of the equipment, nevertheless, the equipment shall be complete and operative in all respects and shall conform to the highest standard of engineering, design and workmanship.

2.0.0 SCOPE OF WORK

The scope of work shall include but not limited to the following:

- AC & DC Motors required for various application
- Actuators required for various applications.
- Mandatory spares as listed in Vol. II / Section-1.0 and recommended spares for two (2) years trouble free operation.

3.0.0 CODES AND STANDARDS

- IS 325 : Three phase induction motors.
- IS 12615 : Energy Efficient Induction Motors-Three Phase squirrel cage.
- IS 2148 : Specification for Flameproof enclosures of Electrical apparatus.
- IEC 60034 : Specification for rotating machines.
- IEC 60079 : Electrical apparatus for Explosive gas atmospheres
- ANSI/UL-674 : Electric Motors and Generators for use in Hazardous location, Class-I Groups C & D, Class-II, Groups E, F & G

Motors & Actuators shall also confirm to other applicable standards amended up to date.

4.0.0 TECHNCIAL REQUIREMENTS

4.1.0 Motors Design Features

4.1.1 All AC motors shall be squirrel cage three phase/ single phase induction motors. Lifts/Crane motors may be of slip ring type. DC motor shall generally be of shunt wound type rated for 110 V DC. All motors shall be rated for continuous duty. Crane motors shall be rated for intermittent duty.

4.1.2 Inching type motors as per the requirement shall be provided.

4.1.3 The motor rating shall be at least 10% over the maximum input power requirement of the driven equipment at rated point. Gas booster compressor motor & BFP shall have 15% design margin.

4.1.4 Motors shall be of High efficiency type IE3 for motors up to 55kW & IE2 for motors above 55kW with high power factor (at least 0.8).

4.1.5 Power supply for AC motors shall be as follows :

- Up to 0.2 kW : 240 V, 1 Phase, 50 Hz.
- Above 0.2 kW up to 160kW : 415 V, 3 Phase, 50 Hz solidly grounded system.
- Above 160 kW : 11 kV, 3 Phase, 50 Hz resistance grounded system

4.1.6 Motors shall be capable of delivering the rated output with supply voltage variation of ±10% and frequency variation of ±5% and absolute sum of 10%.

4.1.7 The motor characteristics shall match the requirements of the driven equipment so that adequate starting, accelerating; pull up, breakdown and full load torques are available for the intended service.

4.1.8 Squirrel cage induction motors shall be designed for direct on line starting. Starting current shall not exceed as mentioned in IS 12615. The motor shall be capable of withstanding the stresses imposed if started at 110% rated voltage subject to tolerance given in IS 325 & IS 12615.

4.1.9 No load power factor for motors shall not be less than 0.8.

4.1.10 All motors shall be suitable for bi-directional rotation.

4.1.11 Double squirrel cage rotor shall be considered for all HT motors.

4.1.12 BFP motors shall be suitable for VFD application and accordingly derating margin in the above motor shall be considered w.r.t frame also. Class of insulation for VFD motor shall be class-F but temperature rise limited to class B.

4.1.13 The starting current of 110V DC motors shall be restricted to 200% of full load current whereas for 125V DC motors, the same shall be restricted to 160%.

4.1.14 The motor shall be capable of withstanding the stresses imposed if started at 110% rated voltage. Motor shall start with rated load and accelerate to full speed with 80% rated voltage at motor terminals. Permissible number of starts per hour for continuous duty motors shall be as follows:

Starts	**No. of Starts**
No. of hourly startups uniformly distributed, starting from final steady working temperature (Hot)	**3**
No. of consecutive startups with initial temperature of motor at final steady working temperature (Hot)	**2**

4.1.15 Motors subject to reverse rotation shall be designed to withstand the stresses encountered when starting with non-energized shaft rotating at 125% of rated speed in reverse direction.

4.1.16 The locked rotor withstand time under hot condition at 110% rated voltage shall be more than motor starting time by at least 2.5 seconds for motors with 20 seconds starting time and by 5 seconds for motor with more than 20 seconds starting time. Starting time shall be at the minimum permissible voltage of 80% rated voltage. If the above conditions cannot be met in unavoidable cases, special provisions such as motor shaft speed switch, etc. shall be provided.

4.1.17 The motor characteristics shall match the requirements of the driven equipment so that adequate starting, accelerating, pull up, breakdown and full load torques are available for the intended service.

4.2.0 Motor Constructional details

4.2.1 **Enclosure**

a) Motors located indoor shall have IP 54 degree of protection and those located outdoor shall have IP 55 degree of protection for the enclosure. For vertical mounted outdoor motors a Canopy shall be provided. For hazardous areas, approved type of flameproof and increased safety enclosure shall be provided.

b) The motors shall generally be of self-ventilated type totally enclosed fan cooled (TEFC). Alternatively for large motors, closed air Circuit Air Cooled (CACA) System shall be adopted.

4.2.2 **Winding and Insulation**

a) The winding for all the motors shall be of super enameled copper wire of suitable gauge or copper strip conductor depending on its rating. All motors shall be class F insulated limiting temperature rise to class B limit.

b) The windings, fittings and hardware shall be corrosion resistant. The windings shall be tropicalised and shall be impregnated to make them non-hygroscopic and oil resistant.

c) Main insulation and inter turn insulation of Motors shall be capable of withstanding switching surges as per IEC 34, Part 15.

d) Motors of rating 30 kW and above shall be provided with space heaters, suitably located for easy removal or replacement. The space heater shall be rated for 240 V, single phase, 50 Hz, and sized to maintain the motor internal temperature above dew point when the motor is idle. The space heater all the four terminals shall be brought out for termination facility.

e) All HT motors shall be provided with six (6) duplex type winding temperature detectors, two (2) per phase and the motor bearing shall be provided with 2 Nos. duplex type temperature detectors on driving end and non-driving end. These temperature detectors shall be resistance type, 3 wire, platinum wound, 100 ohms at 0°C. The temperature detectors shall be connected to the DCS system.

4.2.3 **Bearings**

a) Motor shall be provided with antifriction bearings, unless sleeve bearings are required by the motor application. Vertical shaft motors shall be provided with thrust and guide bearings. Thrust bearing of tilting pad type are preferred.

b) Bearings shall be provided with seals to prevent leakage of lubricant or entrance of foreign matters like dirt, water etc., into the bearing area.

c) Lubricant shall not deteriorate under all service conditions. The lubricants shall be limited to normally available types in India.

d) Bearings shall be insulated as required to prevent shaft current and resultant bearing damage for a motor rating of above 1000 kW.

e) In case forced lubrication is adopted, a shaft driven oil pump shall be provided along with an electrical auxiliary pump. Alternatively, two motor driven pumps may be provided, one working and one standby. All necessary auxiliaries and accessories shall be provided to complete the system. A pressure gauge and pressure switch for low oil pressure warning and to start the

standby oil pump automatically shall also be provided. A motor driven jacking oil pump may be provided, for heavy shaft loads.

4.2.4 **Indicator/Switch**

a) Dial type local indicator with alarm contacts shall be provided for the following:

- HT motor bearing temperature.
- Hot and cold air temperatures of the closed air circuit for CACA motors.

b) Flow switches shall be provided for monitoring oil flow of forced lubrication bearings, if used. Alarm switch contact rating shall be minimum 0.5 A at 110 V D.C. and 5A at 240 V A.C.

4.2.5 **Motor Terminal Box**

a) Motor terminal boxes shall be provided with a detachable extension box (cable core splitter box). Terminal box shall be capable of being turned 360° in steps of 90°, unless otherwise approved. The terminal boxes shall be split type with removable cover with access to connections and shall have the same degree of protection as motor. The terminal box shall have sufficient space inside for termination/connection of cables.

b) Terminals shall be of stud type, substantially constructed and thoroughly insulated from the frame. The terminals shall be clearly identified by phase markings, with corresponding direction of rotation marked on the non-driving end of the motor. The terminal box shall be capable of withstanding maximum system fault current for 0.25 sec for all breaker operated motors and shall be provided with explosion vent. However for contactor operated motors, the terminal box shall be capable of withstanding the fault current for let through time of the fuse preceding it.

c) For 11000 V motor, the terminal box shall be phase segregated type and neutral leads shall be brought out in a separate terminal box (not necessarily phase segregated type) with shorting links for star connection. For motors for 1000 kW and above, PS class current transformers shall be provided in the neutral side terminal box on all three connections for differential relay.

d) All accessory equipment such as space heater temperature detector, etc., shall be wired and terminated in a enclosure, separate from motor (power) terminal box. The degree of protection for accessory terminal box shall be same as that of motor. Terminal box shall be complete with double compression brass glands and stud type terminals and shall be suitably mounted on the side of the motor. If possible, the accessory terminal boxes shall be located on the same side of the motor as the main (power) terminal box.

4.2.6 The noise level and vibration limits shall not exceed the limits specified in relevant IEC/IS standards.

4.2.7 **Grounding**

The frame of each motor shall be provided with two separate and distinct grounding pads complete with tapped hole, GI bolts and washer. The cable terminal box shall have a separate grounding terminal. The grounding connection shall be suitable for accommodation of following sizes of earthing materials.

All HV motors & LV motors ≥ 90 kW	-	75 x10 mm GI flat.
≥ 30 kW up to 90 kW	-	50 x 6 mm GI flat.
≥ 5 kW to 30 kW	-	25 x 6 mm GI flat.
< 5 kW	-	8 SWG GI wires.

4.3.0 Actuators

4.3.1 Duty cycle of actuators shall suit the system requirement. The actuators shall be capable of giving the required torque at the output shaft. The actuators shall be designed to take the full thrust.

4.3.2 Actuators shall be of totally enclosed weather proof and dust proof construction with IP 65 enclosure and shall be suitable for outdoor application without the necessity for a canopy. The actuator shall be suitable for mounting directly on the valve. The actuator shall be capable of giving the required torque, rpm and thrust without the help of any spur gear arrangement. The actuator shall be suitable for mounting in any position. Actuators shall be of non-integral type.

4.3.3 Each actuator shall have a hand wheel fitted on it for emergency operation. The hand wheel shall be designed such that it is declutched automatically when the power supply to the motor is restored. The material of the hand wheel shall be either malleable iron or steel. The hand wheel shall have adequate clearance from housing for each gripping and operation. Actuators offered shall be with self-locking worm.

4.3.4 Two number adjustable torque switches (one for open and one for close) each with 2 NO & 2 NC potential free contacts shall be provided. It is required to have calibration for the torque switches so that the switches can be easily set to any value desired.

4.3.5 Two numbers of position limit switches (one for open and one for close) each with 2 NO and 2 NC potential free contacts shall be provided. Two auxiliary limit switches (one for open and one for close) with 2 NO & 2 NC potential free contacts shall also be provided. The limit switches shall be of independently adjustable type. Limit switches and actuating mechanism shall be rust proof suitable for damp atmospheres. Limit switch compartment shall be weather proof and spacious enough for easy setting. The limit switches shall be suitable for the following ratings, both 240 Volts AC, 5 A and 110 V DC, 0.5 Amps.

4.3.6 Each actuator shall have a space heater in the limit switch compartment suitable for 240 V AC 50 Hz single phase supply.

4.3.7 The wiring from the limit switches, torque switches etc. shall be brought out in a separate terminal box of adequate size, so as to easily terminate the control cables.

4.4.0 Variable Speed Drive Systems (VSDS)

4.1.1 Some of the driven loads (Such as Boiler Feed Pumps) are proposed to be of the variable speed type.

4.1.2 All the motors rated for 415V shall be driven by atleast 12 Pulse VSDS drives.

4.1.3 For each of these machines, variable speed drives are normally provided for better speed response, range ability, control stability and for ease of control, and smooth, efficient and optimum speed operation of the machine drives.

4.1.4 These variable speed drives will preferably controlled AC electrical variable speed drive system (VSDS) with AC squirrel cage induction motor.

4.1.5 Each VSDS system will have most of the following features:-

- High input line-side power factor throughout the speed range.
- Built in dry type isolation transformer suitable for 415V input.
- In case of Inverter power stack failure built in advanced cell by pass contactor to be provided.

- Power conversion devices by LV IGBT preferred.
- Low harmonics on the input line-side, with the total and individual harmonic contents not exceeding the limits established in IEEE-519.
- Low load side harmonics with near sinusoidal current in the drive circuit.
- Suitable for regenerative operation as may be required for the drive application.
- Soft start and soft stop, with capability for bi-directional operation of the drive as may be required.
- Reduced shoot through faults.
- Integrated pf improvement facility shall be provided
- It should be permissible to use long cable without choke upto 2 kM.
- High starting torque as may be required for the drive application.
- Suitable for various drives operating with driven equipment having constant torque, constant power, or load torque varying with square or cube of speed.
- Faster response and have a wide speed range.
- Greater tolerance to load side drive machine parameter variations.
- Wide range of low frequency and super synchronous speed frequency range of operation as may be required.
- Low torque pulsations throughout the lowest & highest frequency range.
- Stability throughout the lowest and highest load range.
- Reduced voltage spikes inflicted on the motor / VSDS equipment that can occur during commutation.
- VSD shall be capable of flying restart.
- Frequency convertor output shall be directly connected without matching transformer
- VSD shall have dynamic breaking unit and resistor feature.
- In case of Inverter shut down DOL bypass to be provided.

4.1.6 The VSDS will comprise frequency converter, which will as a minimum be as follows:

- Voltage or Current Source DC link Pulse Width Modulated (PWM) Converter configuration suitable for operation at automatically produced fixed ratio of Voltage / Frequency (V / F) throughout the complete speed range of the motor; and for operation in constant torque and constant power mode as appropriate. The converter will comprise line commutated power converter connected to AC mains either directly or by a suitably rated converter transformer.

- Provided with suitable input transformer if required to transform the input system network voltage to the optimal voltage of the converter and to reduce the short circuit capacity and to reduce 'line notching' that can occur during commutation. The Input transformer will have appropriate phase shifting multiple windings to eliminate the 5th & 7th harmonics and their multiples.

- Suitable regulating equipment that will be so designed as to enable the drive motor system to respond to load change with good dynamic accuracy, excellent speed holding accuracy and fine speed setting resolution. From the instrumentation control system, isolated 4-20 mA dc controller output signal will be made available as a set point for the speed controller in the regulation system. The system will include as part of the speed controller any transducer/ converter that may be required to interface with the above signal. Facility for signal measurement at important points in the regulating system will also be provided.

- The VFD shall be capable of producing an variable AC voltage/frequency output to provide continuous operation over the normal system 30-100% speed range, The VFD must be capable of sustained operation at 1/10 speed to facilitate checkout and maintenance of the driven equipment. As a commissioning and troubleshooting feature, the VFD power circuit shall be capable of operating without a motor connected to the VFD output.

- Independently adjustable voltage boost for VSDS start up and operation at the lower end of the frequency.

- The VFD shall be capable of momentary overload of 110% for one minute for variable torque loads (centrifugal fans, pumps, etc.) and 150% for one minute for constant torque loads.

- Separately adjustable ramp up and ramp down time facilities.

- Voltage Harmonics: Individual or simultaneous operation of the VFD's shall not add more than 3% total harmonic voltage distortion.

- Current Harmonics: Maximum allowable total harmonic current distortion limits for each VFD shall not exceed 5% as calculated and measured at the point of common coupling.

- Compliance shall be verified by the VFD manufacturer with field measurements of harmonic distortion differences at point of common coupling with and without VFD's operating. The point of common coupling (PCC) for all harmonic calculations and field measurements for both voltage and current distortion shall be defined as the primary connection of each VFD input transformer.

- VFD output waveform shall be suitable for operating a squirrel cage induction motor without derating or requiring additional service factor. To ensure that there are no problems with motor heating, VFD output current waveform shall be inherently sinusoidal at all speeds, with a total harmonic current distortion not exceeding 3% between 10% and 100% speed regardless of loading VFD's utilizing output transformers/filters are not acceptable.

- The VFD output shall produce no electrically induced pulsating torques to the output shaft of the mechanical system eliminating the possibility of exciting a resonance caused by VFD induced torque pulsations. VFD systems or other types which produce torque pulsations in excess of 1%, will require a torsional analysis to be supplied by the VFD manufacturer as part of the scope of supply. The price of the torsional analysis shall be included in the base price of the VFD. If the torsional analysis shows that a special coupling is required, the VFD supplier shall be required.

- An input transformer shall be included to provide common mode voltage protection and allow the use of a standard motor. Use of reactor is not an acceptable method for protection against common mode voltages.

- Guaranteed minimum total VFD system efficiency (□sys) shall be a minimum 96% at 100% speed & 100% load and minimum 95% at 80% speed & 50% load. Efficiency evaluation shall include input transformer, harmonic filter and power factor correction (if applicable), VFD converter, and output filter, as indicated below. Auxiliary controls, such as internal VFD control boards, cooling fans or pumps, shall be included in all loss calculations.

- The VFD system efficiency is as follows: □sys = □VFD x □xfmr x □pfc x □harm x □filter.

  Converter/Inverter (VFD) □VFD

  Input Transformer □xfmr Total VFD System Efficiency (□sys)

  Power Factor Correction □pfc must be 96.0% at full load

  Input Harmonic Filter □harm and 95% at 50% load.

  Output Filter □filter

- VFD system shall maintain a 0.95 minimum true power factor from 30% to 100% speed.

- VFD system including power factor correction and/or harmonic filter shall never have a leading power factor under utility or generator operation. VFD manufacturer is to supply a power factor correction system, if required, to meet this requirement. Power factor correction unit shall include a separate input isolating contactor with fuses, power factor correction grade capacitors (5 KV class), and series harmonic decoupling reactors, all integrated into VFD system and mounted within the VFD enclosure.

- Complete features for drive soft start and soft or extended stop as required with features required for bi-directional operation of the drive as may be required for the particular application.

- Close loop control to keep output voltage unaffected by system voltage and load changes. Regulation of output voltage will not be more than plus 2% to minus 2% under steady state (zero to full load) and 8% under transient conditions.

- Maximum drift in set frequency will be plus 0.5% to minus 0.5%.

- All facilities as required for on site adjustments of current limits, trip time, maximum frequency, minimum frequency, start compensation, voltage boost, slip compensation, accuracy rate, deceleration rate and others as required.

- All internal firing signals and other communications which link operational controls with power components (such as status and diagnostic signals) must utilize fiber optic cables.

- The failure of any power switching device (SCR, GTO, diode, IGBT, IGCT, etc.) shall not prevent continued VFD operation. In the event of a device failure, the VFD shall annunciate and identify the specific location of the failed device and resume operation until such time as repairs can be scheduled.

- The VFD system must be capable of producing full rated torque in the event of a power loss of 5 cycles or less.

- The VFD system must be capable of automatically restarting in the event of a momentary loss of power, or a clearing of a drive trip. The VFD system shall provide the user with the choice of automatically restarting or not. The user shall be able to selectively apply this feature to some but not all conditions as appropriate for the specific application.

- In the event of a ground fault, the VFD shall capable of annunciating the ground fault condition, safely operating and, by user selection, either trip or continue operation. As a result of a ground fault trip, the VFD shall be capable of being reset and operating normally. There shall be no risk of fire or electric shock as a result of the ground fault.

- Comprehensive protection and fault display circuit including under / voltage (supply, over current, short circuit / earth fault due to inverter and / or motor fault , internal / external fault provisions for tripping unit. covering as a minimum Over current protection, fast acting short circuit & transient suppression circuits, Thermal overload protection, Phase sequence monitoring and protection, Single phase protection, Mains & Internally generated Transient Over Voltage Protection, Under Voltage and mains supply failure protection, Control supply failure, IGBT fuse failure, Gate suppression for output circuit faults, Thermistor protection relay for protection of windings of motors greater than or equal to 75 kW, necessary di/dt & dv/dt protection, Device / Cubicle overheating protection, Ventilation failure, and any other protection as required for the type of scheme provided.

- All power components in the converter sections shall be designed for rack-out accessibility.

- This provides the maximum safety during component repair or maintenance, as well as providing the required ease of access to minimize repair downtime. Alternate access options must be described in the proposal for purchaser's review and evaluation.

- All low voltage components, circuits and wiring shall be separated with physical barriers from any sources of medium voltage.

- Where closed loop dynamic and fast speed response is required for drives, necessary multi loop control system will be provided complete with tachometers provided in the drive shaft.

4.1.7 The control system will consist of a multi loop system having two internal loops. One loop is for speed control and the other is for the control of current. Each loop will have its own controller, along with an acceleration ramp function, which sets the desired value of the speed in accordance with a linear ramp function and thus prevents sudden variation in the controller input.

4.1.8 The primary controlled variable will be speed which will be measured by means of a tachometer, which will be provided on the drive shaft and compared with the reference speed input. The error in speed will actuate a speed controller to establish the reference current input. This reference value will be subtracted from the actual current value and the error signal actuates the current controller, the output of this should be connected to the gate control unit, which controls the firing of the IGBT.

4.1.9 The inner current loop is made more active than the speed control loop. The speed and current controllers will be capable of accepting the form and type of feed back signal provided by the error detector and must provide at its output a signal of the proper type to operate the IGBT.

- All necessary indication and monitoring equipment that will as a minimum include speed indicator for motors with a provision for repeat indication signal for use with DCS instrumentation system, speed reference, speed feedback, current reference, current feedback, regulated power supply voltages; voltmeter, ammeter, frequency, power factor meter, kW meter at mains input supply side, pulse output meter; voltmeter, ammeter, frequency, kW meter torque meter kW meter and speed indicator on the load side.

- Audio visual Alarm annunciation (with visual and audio alarm acknowledge facilities) as required that will as a minimum include drive in monitoring mode, drive in regenerating mode, control electronic power supply, over temperature, motor over current, rectifier over current, motor thermal overload, any other motor / converter faults.

- The VFD system shall be supplied with the capability to operate the motor directly across the input power source in the event of a VFD malfunction. All switchgear necessary for this direct-on-line bypass of the VFD shall be supplied, including a VFD output isolating contactor and a fused full voltage starter in a common NEMA 1 enclosure with motor overload protection. Bypass must be separated from the VFD by a metal barrier. Contactors shall be draw-out, vacuum type. The contactors shall be easily removed from the front of the enclosure by loosening two bolts. Line and load cable terminations shall be completely accessible from the front. The VFD isolating contactor and starter are to be electrically isolated. Motor protection relaying shall be a Multilin 269 Plus, or Multilin SR469 if specified on the data sheet, or approved equal, to provide a complete motor management system that allows several motor related parameters to be monitored against user-selectable set points for protection during VFD bypass operation.

- Air-cooled VFDs shall be provided with 100% redundant fans and automatic switchover in the event of a fan failure for enhanced reliability. If a blower fails, the system must automatically switch to the alternate blower and generate an alarm to notify operator of initial blower system failure. Drive must have air flow detection switches to monitor proper operation of the system (using temperature detectors as the only protection against loss of blower system is not acceptable). If more than one blower is required for normal system operation, each blower must have its own 100% redundant backup. During normal operation, the system must periodically cycle between the two blower systems to “exercise” them and prevent drying out of bearings, seals, etc., and to ensure availability of both systems. VFD system manufacturer shall provide heat dissipation data necessary to design all auxiliary HVAC systems.

- Mechanical key interlocks shall be provided on all doors. Interlocking shall be fully coordinated to prevent access to all high voltage compartments, including transformer, filters or any switchgear that is part of the supply, when line power is applied to the VFD system. Interlocks must be mechanical to provide positive lock-out prevention and safety. Electrical interlock switches alone are not acceptable, due to the possibility of inadvertent shutdown and the ease with which such switches could be bypassed.

4.1.10 VSDS unit will be controlled from following 3 different locations

- VSDS panel
- Local Operator Panel or Local Control Station
- DCS

4.1.11 Following minimum control facilities will be provided on each of the VSDS Panel and the Local Operator Panel:-

- Incoming switch and HRC fuses.
- Start / Stop PBs to switch ON / OFF of the drive.
- All necessary contactors and switch with HRC fuses or current limiting circuit breakers for the drive control and protection along with thermal overload protection.
- Raise / Lower PBs for speed variation of the drive.
- Auto / Manual Selector Switch for selection of the mode of operation.

4.1.12 In Auto mode, frequency will be controlled from the instrument control PLC / DCS system by a 4 to 20 mA signal. For ON / OFF control of the motor in the Auto mode, 4-20 mA interlock signal from instrumentation PLC system will be wired to the VSDS panel.

4.1.13 In the Manual mode, the Selector Switch will be provided to select the motor control either from VSDS Panel or from the field.

- Drive Ready Indication and
- Speed Indicator
- DCS interface covering :-
- Wiring of 4-20 mA signal input from DCS/PLC for speed variation.
- Wiring of DCS / PLC ON / OFF input signal / contact for motor Start / Stop.
- Wiring of 4-20 mA signal output to DCS/PLC for speed indication.
- Wiring of contacts to remote for Drive Ready Indication.

5.0.0 TESTS

All tests shall be conducted as per relevant IS / IEC / IEEE standards and shall be performed in the presence of Owner/Owner's representative, if so desired by the Owner/Owner's representative. The Bidder shall give at least 15 days advance notice of the date when the tests are to be carried out.

6.0.0 PAINTING

All equipment shall be finished with two (2) under coats of high quality epoxy based primer followed by two coats of epoxy painting. Painting shall be carried out by approved process.

7.0.0 SPECIFIED TECHNICAL DATA

Sr. No	DESCRIPTION	UNITS	REQUIREMENTS
A	**Motors**		
1.0	**Rated Voltage**		
1.1	Below 0.2 kW	V	240 V, 1 Ph
1.2	From 0.2 kW and less than and equal to 160 kW	V	415
1.3	Above 160 kW	V	11000 V
2.0	Rated Frequency	Hz	50
3.0	Voltage variation		±10%
4.0	Frequency Variation		±5%
5.0	Absolute sum of variation		10%
6.0	Rated Voltage for DC Motors	V	110 ± 10% [125±10% If GTG supplier's standard]
7.0	Class of Insulation for all Motors		Class `F' with temperature Limited to Class `B'
8.0	Starting Current		As per Cl.4.1.8 & Cl.4.1.9
9.0	Degree of protection		IP 54/IP W 55
10.0	Method of cooling		TEFC/CACA
11.0	Fault withstand capability of terminal box		Fault current for 0.25 sec. for breaker controlled motors
12.0	No. of consecutive hot starts with initial temperature of motor at final steady working temperature		Two (2)
13.0	No. of hourly starts uniformly distributed from final temperature		Three (3)

FORMT9-P REV-A (MUM)

VOLUME - III

SECTION – 3

DETAILED TECHNICAL SPECIFICATION - ELECTRICAL

SUB-SECTION - 3.8

LT SWITCHGEAR

FORMT9-P REV-A (MUM)

VOLUME - III

SUB-SECTION - 3.8

LT SWITCHGEAR

1.0.0 GENERAL

This specification covers, the design, manufacture, supply, erection, testing & commissioning of complete LT Switchgears.

It is not the intent to specify completely herein all details of the equipment; nevertheless, the equipment shall be complete and operative in all respects and shall conform to the highest standard of engineering, design and workmanship.

Should the Bidder wish to deviate from this specification in any way, he shall draw specific attention to such deviation by listing the deviations in the deviation schedule without which his offer will be considered in conformity with the specification in all respects.

2.0.0 SCOPE OF WORK

The scope of work shall include but not limited to the following :

- 415 V Power Control Centres
- 415 V Motor Control Centres
- AC/DC Distribution Boards
- Normal AC/ Emergency AC / Emergency DC Lighting Distribution Boards
- DC Starter Panels
- Local Push Button Stations & Local Starters.
- List and supply of special maintenance tools and tackles
- All necessary base frame, channels, and erection hardwares.
- Mandatory spares as listed in Vol. II / Section-1.0 and recommended spares for two (2) years trouble free operation.

3.0.0 CODES & STANDARDS

LT switchgear shall conform to relevant IS / IEC standards. The major standards are listed below:

IS 8623	:	Specification for low voltage switchgear and control gear Assemblies
IS 10118	:	Code of practice for selection, installation and maintenance of switchgear and control gear
IS 12021	:	Specification for control transformers for switchgear and control gear for voltages not exceeding 1000V
IS 13947	:	Low-voltage switchgear and control gear- General rules
IS: 2705	:	Specification for current transformers.
IS: 3156	:	Specification for voltage transformers
IS: 3427	:	Degree of protection provided for metal enclosed switchgear and control gear.

IS: 5082	:	Wrought aluminium and aluminium alloy bars, rods, tubes and sections for electrical purposes.
IS 11353	:	Guide for uniform system of marking and identification of conductors and apparatus terminals.
IS 12063	:	Classification of degrees of protection provided by enclosures of electrical equipment
IS: 2208	:	HRC fuse cartridge, fuse links upto 650 V
IS 130321	:	Miniature circuit breaker boards for voltages not exceeding 1kV

All components and accessories shall also conform to relevant IS/IEC standards, amended up to date.

In place of IS / IEC standards.

4.0.0 TECHNICAL REQUIREMENT

4.1.0 Design Features

4.1.1 The Power Control Centre (PCC), the Motor Control Centre (MCC) and Distribution Board (DB) shall be used to provide power, control, indication and protection for the 400 V/240 V drives/feeders and DC drives/feeders in the plant.

4.1.2 The Power Control Centre, Motor Control Centre & ACDB shall be suitable for 415 V ±10%, 50 Hz +5%, -5% and 3 phase, 4 wire solidly grounded system.

4.1.3 AC Emergency MCC shall be suitable for 415 V ±10%, 50 Hz +5% -5% and 3 phase, 4 wire solidly grounded system.

4.1.4 All switchgear offered shall be arc resistant design and the switchgear shall be tested for internal arc as per IEC. Internal Arc testing procedure and certificate shall be furnished. LT switchgears shall be fully type tested.

4.1.5 DCDB & DC lighting distribution boards shall be suitable for 110V DC + 10 to -15%, 2 wire ungrounded system. DCDB shall be suitably sized for DC system fault current for one sec. duration. Duplicate feeders shall be provided for all essential loads with change over arrangement at the receiving end.

4.1.6 All PCCs shall have two bus sections with separate incomers and bus coupler. Each incomer shall be rated for feeding the entire PCC and shall correspond to the transformer rating with 10% margin and rounded off to the next higher standard rating. Incomer breaker fed from transformers shall be at least rated to carry the transformer full load current at minimum voltage within the enclosure at ambient the specified design ambient temperature

4.1.7 All 415 V PCC's shall have two bus sections with separate incomers and a bus coupler. Incomer shall be rated for feeding the entire switchgear and shall be capable of delivering the full rated output from the transformer.

4.1.8 Under normal conditions, PCC incomer breakers are 'ON' with bus coupler 'OFF'. In case of one incomer outage, the other incomer shall feed the entire PCC. Necessary auto changeover scheme and manual changeover scheme shall be provided with necessary control indications and interlocks. Momentary paralleling with check synchronizing relay shall be provided in manual changeover scheme. Adequate interlocking shall be provided to prevent continuous parallel operation of the two incomers.

4.1.9 During black out condition, Emergency DG set shall be automatically started and emergency bus section shall be energized after ensuring that the bus coupler between emergency bus and the main PCC is 'OFF'. Synchronization facility shall be provided for momentary paralleling of EDG with one of the PCC incomers after normal AC power is restored.

4.1.10 The MCC/Distribution Board incomer/bus rating shall have 15 % margin and shall not be less than the sum of the maximum load expected plus load on the spare feeders. 60% diversity may be considered for the load on spare feeders.

4.1.11 415V PCC/MCC/AC emergency MCC shall be rated for 50kA for 1sec. AC lighting distribution boards shall be rated for 10kA for 1 sec. DCDB shall be suitably sized for DC system fault current for one (1) sec. duration.

4.1.12 All PCCs and Emergency MCC shall be provided with air circuit breakers (ACBs) / Molded case circuit breakers (MCCBs) of suitable ratings.

4.1.13 All MCCs shall have two bus sections with two 100% rated incomers and bus coupler. All incomers, bus couplers and outgoing feeders of MCCs above 400A rating shall be ACB controlled. Fuse switch units shall be provided for 400A rating and below.

4.1.14 All AC motors shall be suitable for direct on line (DOL) starting. Motor feeders rated 90 kW and above shall be ACB controlled and connected to PCC. Motors less than 90 kW shall be provided with switch fuse, contactor and overload relay with SPPR protection.

4.1.15 The PCC/MCC incomer shall be provided with digital ammeter and voltmeter and power supply indicating lamps (R, Y, B). Motor feeders shall be provided with three indicating lamps for ON,OFF&TRIP and push buttons for START(in Test position), STOP and RESET. In MCC, motor feeders for essential auxiliaries shall have contactors with delayed drop out feature adjustable upto 3s and necessary auto restart facility.

4.1.16 20% spare feeders with minimum one each of each rating shall be provided on all PCCs, MCCs and distribution boards.

4.1.17 Redundant 110V DC control supply (from two different sources) with auto changeover facility shall be provided for breakers, numerical relays etc.

4.1.18 Breaker spring charging motor shall be suitable for 110 V DC.

4.1.19 All LT switchgears shall be of same make. All panels in every room shall have same height.

4.2.0 **Control Requirements**

4.2.1 All PCC /Emergency MCC breakers shall be controlled from SAS/DCS.

4.2.2 All interlocks shall be hardwired in the switchboard itself.

4.2.3 Local / Remote selector switch shall be provided in switchboard. Remote selection shall enable starting from DCS / SAS.

4.2.4 For all DCS operated feeders, interposing relays shall be provided in respective switchboard to receive start/stop command from DCS.

4.2.5 Only test closing shall be possible from switchgear.

4.2.6 Breaker signals, protection relay operated condition etc. shall be transmitted to remote in addition to local indication.

4.3.0 **Construction**

4.3.1 The PCC / MCC / DB shall be self-standing, floor mounted, compartmentalized, made of minimum 2 mm CRCA thick sheet steel cubicle with metal / insulating partitions between compartments. The thickness of doors / covers shall not be less than 1.6 mm.

4.3.2 The PCC and MCC shall be fully draw out type with self-aligning multifinger silver plated contacts for power termination. Similar modules of breakers shall be interchangeable. Other distribution boards shall be fixed type.

4.3.3 The enclosure shall conform to IP-52 degree of protection for the switchgears inside the switchgear rooms. The enclosure shall be IP54 for the switchgears located other than switchgear rooms but inside a building.

4.3.4 The operating height of the operating handle/switches shall be limited to a maximum of 1800 mm and a minimum of 300 mm.

4.3.5 PCC shall be of single front type. DB may be double / single front fixed type. MCC may be of double front type. The panels shall be extendible at both ends for the additions of vertical sections either by a breaker panel or a fuse switch panel. Ends of the bus bars shall be suitably drilled for this purpose. Cable termination to PCC/MCC shall be from bottom whereas bus duct termination shall be from top.

4.3.6 The individual module shall have rolled edges with neoprene rubber gaskets to form a dust proof structure. The doors shall have concealed hinges and shall be interlocked with the main switch operating handle so that it cannot be opened when the switch is `ON'. A feature for defeating the interlock shall also be provided for maintenance purpose.

4.3.7 The moving portion of the switchgear shall have locking arrangement in all the three positions, namely, SERVICE / TEST / ISOLATED. Arrangement for covering the power and control contacts with a shutter shall be provided when the moving carriage is withdrawn from the switchgear.

4.3.8 The MCC/DB modules shall be arranged in vertical sections with barriers between each module. The bus chamber as well as the breaker cubicles shall have inter panel fire barrier. A liberally sized vertical cable alley shall be provided to accommodate all cables.

4.3.9 All switches, indicating lamps, protective relays and indicating instruments shall be flush mounted on the respective module compartments and other auxiliary devices of the switchgear may be mounted inside the module.

4.3.10 It shall be possible to earth the enclosure at two places and suitable size of studs shall be provided.

4.3.11 Terminal blocks shall be provided at the side of the modules for cable terminations. The lowermost terminal block shall have minimum clearance of 200 mm from the bottom plate. The minimum clearance between adjacent rows of terminal blocks shall be minimum 100 mm.

4.3.12 The panels shall be rigid, vibration proof and free from bends and twists. Panel door and side doors shall have Allen head lock.

4.3.13 All boards shall be provided with removable gland plates.

4.3.14 Suitable lifting hooks shall be provided on each transportable section for ease of lifting of switchboard.

4.4.0 **Air Circuit Breakers**

4.4.1 Circuit breakers shall be fully drawout, indoor, metal clad, air break and trip free type. Breakers of similar rating and duty shall be interchangeable both electrically and physically and shall be suitable for the corresponding duty. All the incoming and bus coupler breakers shall be 4 pole type.

4.4.2 Circuit breakers shall be provided with motor operated spring charged stored energy closing mechanism. Manual spring charging and closing mechanism shall also be provided. One open-close-open operation of the circuit breaker shall be possible after failure of power supply to the motor. Shunt trip coil shall also be provided.

4.4.3 The breaker shall have the following positions with positive indication for each of them:

Service position	:	Both power and control circuits are connected.
Test position	:	Power circuit is disconnected and the control circuit is connected.
Disconnected position	:	Power and control circuits disconnected.

4.4.4 The earth connection must remain connected in "Test" position. The earth connection shall make before the main power/control contacts make and break after the main power/control contacts break. The breaker shall be suitable for operation from both remote as well as local while under "service" position. In "test" position the breaker shall be operated only from local.

4.4.5 Anti-pumping feature shall be provided to prevent automatic reclosure of the breaker, after tripping, in the event of sustained fault. The breaker shall not close unless the spring is fully charged.

4.4.6 Indicating lamps shall be of LED type. The red lamp shall indicate the breaker closed position, green lamp shall indicate breaker open position and amber lamp shall indicate breaker tripped condition in service position.

4.4.7 Telescopic trolley shall be provided for maintenance of circuit breaker module.

4.5.0 **Bus Bars**

4.5.1 The busbars shall be of high conductivity electrolytic Aluminium, liberally sized for continuous as well as short circuit current ratings and shall conform to relevant standards. The continuous current rating of the busbars shall be the same as that of the incoming feeder rating and shall carry this continuous current without exceeding the temperature of 90°C considering an ambient of 50°C.

4.5.2 The busbars shall be designed to carry a short circuit current 50 kA for 1 sec (minimum).

4.5.3 Three phase and neutral busbars shall be provided and a separate bus for earthing shall be provided.

4.5.4 Buses shall be spaced with adequate clearance of at least 25 mm.

4.5.5 The main horizontal busbars shall be placed in a separate enclosure at the top. Vertical busbars shall be used for connection to individual sections of the panels, fully shrouded with removable partitions. The busbar rating shall be same as that of the corresponding breaker and shall not be decided on the basis of CT ratios.

4.5.6 The main busbar supports shall be arc resistant, flame retardant and moulded from thermosetting FRP located at uniform intervals providing adequate support for the busbars and droppers.

4.5.7 Auxiliary supply busbars shall run horizontally in a separate enclosure within the power busbar compartment with necessary tee-off connectors for distributing auxiliary supply to each vertical panel. Rubber grommets shall be used for all wire entries to make the entries dust and vermin-proof.

4.6.0 **Instrument Transformers & Control Transformers**

4.6.1 The current and voltage transformers shall be cast resin insulated type, with primary and secondary terminals marked indelibly. Facility shall be provided for short circuiting and grounding each CT secondary. The CTs shall be capable of withstanding the peak momentary short circuit and the symmetrical short circuit current. The neutral side of the CT shall normally be earthed through a link. CT secondary shall be rated for 1A. Voltage transformers shall have fuses on both primary and secondary. For PCC, bus voltage transformer shall be provided housed in a separate compartment. Secondary of voltage transformer shall be rated for 110 V AC.

4.6.2 The control transformers shall be dry type with class F insulation with class B temperature rise. The transformer shall be complete with switch and fuse/MCBs. One control transformer shall be provided in each MCC module to provide control supply to respective feeders.

4.7.0 **Switches, Fuses, Contactors & Thermal Overload Relay**

4.7.1 The switches shall be TP/TPN heavy duty, air break mechanism operated by a suitable external handle with position indicator.

4.7.2 The live terminals shall be shrouded to avoid accidental contact. Combined fuse-switch of double-break type may be offered wherever practicable. Switches for motor circuits shall be of AC 23 category and of other circuits shall be of AC 22 category.

4.7.3 The fuses shall be of HRC link type with a breaking capacity of 80 kA. Visual indication shall be provided to indicate fuse failure. The motor fuse rating and characteristics shall be suitably chosen so that they do not operate during the starting period of the motor.

4.7.4 The main motor contactors shall be direct-on-line, air break triple pole AC3 duty for AC motors with minimum 2 NC and 2 NO auxiliary contacts. Reversing contactors shall have AC4 duty and shall be electrically and mechanically interlocked. DC contactors shall have minimum DC2 duty.

4.7.5 For motor feeders type II co-ordination shall be provided for switch fuse unit, contactor and overload relay.

4.7.6 Thermal over load relays shall be three element, ambient temperature compensated, time lagged, bimetal type. Each overload relay shall be provided with a built-in single phasing preventor. The relays shall be manually reset type with one changeover contact. Resetting of the relays shall be possible with the compartment door closed, with the resetting knob at the front.

4.8.0 **Protection Relay**

4.8.1 All relays excluding auxiliary relays shall be numerical microprocessor based only with IEC 61850 communications Protocol. They shall have facilities for communication with DCS / SAS system. All hardware/software required for interfacing with the DCS / SAS system shall be supplied. In addition, they shall have communication ports RS232 for direct access of data through laptop.

4.8.2 The relays shall be flush mounted on the front of the individual draw out module units. Indicating devices shall be so located that it can be seen when the relay has operated, without opening the door. The power supply for the protection relays shall be supplied from the two different (Redundant supply) 110V DC system.

4.8.3 The following protection as a minimum shall be provided for breaker operated feeders.

50 - Short circuit protection.
49 - Thermal over load
50N - Instantaneous earth fault
51 - IDMT overcurrent protection
51N - IDMT back-up earth fault protection. (Only for transformer incomers)
64R - Restricted earth fault protection (only for transformer incomers).
27 - Under voltage protection
94 - Electrical anti pumping feature
86 - Hand reset high speed lockout relay
74 - Trip circuit supervision relay
68 - VT supervision/ fuse fail

4.8.4 For breaker operated motor feeders, microprocessor based motor protection relay having comprehensive motor protection features described under MV motor protection shall be provided.

4.8.5 Required auxiliary relays/contactors/timers shall be provided for interlocking and multiplying contacts. Electrically set/reset relay shall be used for multiplying breaker auxiliary contacts wherever contacts are used for interlocking purposes.

4.8.6 Tripping relays shall be lock out with hand reset contacts and shall be suitable to operate at the DC voltage. These relays shall have self-coil-cut-off contacts and shall be provided with hand reset operation indicators.

4.8.7 Each switchgear shall be provided with one DC fail relay and DC fail indicating lamp for each DC incomer. Further, a common DC failure alarm contact shall be wired up for remote annunciation.

4.9.0 **Measuring Instruments**

4.9.1 All the measuring instruments shall be digital multifunction type with energy meters and shall be provided with suitable port for remote hook up to SAS / DCS.

4.9.2 All indicating instruments shall be provided with zero adjuster, accessible from the front.

4.9.3 Necessary current/voltage signals shall be routed to DCS in addition to local indications.

4.9.4 Ammeters shall be provided for all motors rated 15 kW and above and also for other important motors that are specifically required. Provision for remote and local ammeter shall also be given in the PCC / MCC panel. The ammeters in the motor feeders shall be CT operated having a spread out scale in the working range and compressed scale beyond the working range to read the starting current of 6-14 times the rated current of the circuit. A red mark at the rated current shall also be provided in the scale.

4.10.0 **Indicating Lamps**

Low wattage, LED cluster type indicating lamps shall be provided with the lamp assembly complete with holder and suitably coloured lens and a nameplate showing its function. Provision for connecting remote indicating lamps shall also be provided in the panel.

4.11.0 **Control Switch / Selector Switch**

Breaker control switches shall have Neutral-Close-Trip positions. Voltmeters and ammeters in the incomers / feeders shall be provided with a selector switch. The control and selector switches shall be rotary, back connected type having a cam operated contact mechanism.

4.12.0 **Starter Panels**

The starting resistors for the DC motors shall be enclosed in metal clad naturally ventilated self-standing panel (s) with sheet steel material of minimum 2.0 mm thick with degree of protection IP-33. It shall be dust and vermin- proof. The number of resistance steps shall be decided by the Bidder depending on application. The resistor elements shall be made of unbreakable, corrosion proof, joint less stainless steel grids or ferro-chrome aluminium alloy. The grids shall be in punched form and suitable for use in tropical climate.

4.13.0 **Local Push Button Station**

Required number of local push button station shall be supplied completely wired upto terminal block located inside. Enclosure shall have a degree of protection of IP - 55 for outdoor & IP 54 for indoor. The enclosure shall have cover/hinged door. Outdoor stations shall be provided with canopy. Push button station shall accommodate push buttons/terminal blocks as per system requirement.

4.14.0 **Other Auxiliaries**

All panels shall be provided with space heaters with thermostat and switch suitable for operating at 240V, 1 phase 50 Hz. AC. Motors rated 30 kW and above will be provided with motor contactor controlled space heaters, so that the space heaters are ‘ON’ only when the motor is ‘OFF”.

Cubicle lamp with door switch suitable for operating at 240V, 1 phase, 50 Hz. AC and 5/15A plug socket with switch and fuse shall also be provided for each panel.

4.15.0 **Cabling and Wiring**

4.15.1 Ample space for connection of cables shall be provided such that cable cores are not in contact with any metal part of the switchgear. All internal power connections shall be of copper.

4.15.2 The control wiring shall be done with 1100V grade, PVC insulated, stranded copper conductors of minimum 2.5 mm^2 size for CT circuits and 1.5 mm^2 for other circuits. The control wiring shall be terminated in terminal blocks on the side of each module. Each control cable shall be identified at either side by interlocking type PVC ferrules.

4.15.3 Power and control terminals shall be stud type, complete with crimping type connectors. Screw type terminals with screws directly impinging on conductors are not acceptable. Terminals for CTs shall be disconnecting type.

4.15.4 All spare contacts of relays and switches shall be wired up to the terminal board. At least 10% spare terminals shall be provided in each module.

4.16.0 **Earthing Connections**

All cubicles shall be connected to a copper earth busbar running throughout the length of the switchgear. All doors and movable parts shall be connected to the earth bus with flexible copper connections. Provisions shall be made to connect the earthing busbar to the plant earthing grids at two ends. All non-current carrying metallic parts of the mounted equipment shall be earthed.

4.17.0 **Name Plate**

A nameplate with the switchgear tag no. shall be fixed at the top of the central panel. A separate nameplate giving feeder details shall be fixed for each compartment also.

Nameplate shall be provided for each equipment /component and for each feeder mounted over each panel. Special warning labels shall also be provided wherever necessary inside or outside the switchboard.

Engraved nameplates shall preferably be of 3 ply (Black-White-Black) lamicoid sheets of anodised aluminium. Back engraved perspex sheet shall also be acceptable. Name plates shall be fastened by screws and not adhesives.

5.0.0 TESTS

All tests shall be conducted as per relevant IS/IEC/IEEE standards and shall be performed in the presence of Owner/Owner's representative, if so desired by the Owner/Owner's representative. All equipments shall be type tested as per the relevant standards. If relevant type test reports are not available the same shall be conducted without any cost implications.

6.0.0 PAINTING

Equipment shall be finished with two (2) under coats of high quality epoxy based primer followed by two coats of epoxy painting. Painting shall be carried out by approved process.

7.0.0 SPECIFIED TECHNICAL DATA

Sr. No.	Description	Unit	Data
1.0	**General**		
1.1	Rated service Voltage	V	415 V ± 10%
1.2	Rated Current	A	As required with necessary margin
1.3	Rated frequency	Hz	50 +5% -5%
1.4	System Earthing	-	Solidly grounded
1.5	Design ambient temperature	°C	50°C
1.6	Enclosure protection	-	IP-52/IP 54 as specified
1.7	No. of poles	-	4 Poles for all the incomer breakers and load breakers, The motor feeders breakers are of 3 pole.
2.0	**Bus Bar**		
2.1	Material	-	Aluminium
2.2	Temperature (absolute) considering an ambient of 50°C	°C	90°
2.3	Short circuit withstand capacity for 1 Sec	kA	50 (rms)
2.4	Momentary short circuit current capacity	KA Peak	110
3.0	**CIRCUIT BREAKER**		
3.1	Type	-	Air break
3.2	Rated short-time withstand current for 1 sec.	kA	50 (rms)
3.3	Duty cycle	-	O-3 min-CO-3 min-CO
3.4	Operating mechanism		
	- Closing	-	Stored energy type motor wound spring operated.
	- Opening	-	Shunt trip coil
	- Latching arrangement	-	Mechanically and electrically trip free.
3.5	Auxiliary voltage		
	- Closing / Tripping / Spring charging Motor	V	110 V DC

FORMT9-P REV-A (MUM)

Sr. No.	Description	Unit	Data
	- Space heater and lamp	V	240V ± 10%, AC to be derived from PCC/MCC.
3.6	Anti-pumping feature	-	Electrical type
4.0	Switch type		AC 22/ AC 23
5.0	Fuses	-	HRC, Link
6.0	AC Contactors		AC3 / AC 4
7.0	DC Contactors		
	Number of poles	-	2
	System earthing	-	Ungrounded
	Utilization category	-	DC2 for shunt motors
8.0	Thermal Overload Relays		Ambient temperature compensated bimetal type and hand reset type
	Single phasing protection	-	To be provided, (built-in unit of Thermal overload relays).
9.0	**Current Transformers**		
9.1	Service/Type	-	Indoor/Cast Resin
9.2	Accuracy class		
	Metering		Cl.1.0 and 0.2s for incomer.
	Protection		Cl.PS for differential protection & 5P20 for other protection.
9.3	Rated short-time withstand current for 1 sec.	kA	50 (rms)
10.0	**Voltage Transformers**		
10.1	Service/Type	-	Indoor/Cast Resin
10.2	Accuracy class		
	Metering		Cl.1.0 and 0.2 for incomer and tie feeder.
	Protection		Cl.3P protection
10.3	Over voltage with stand capacity		As per IS 3156

VOLUME - III

SECTION - 3

DETAILED TECHNICAL SPECIFICATION - ELECTRICAL

SUB-SECTION - 3.15

POWER AND CONTROL CABLES

VOLUME - III

SUB-SECTION - 3.15

POWER AND CONTROL CABLES

1.0.0 GENERAL

This specification covers the design, manufacture, supply, erection, testing and commissioning of Power and Control Cables.

It is not the intent to specify completely herein all details of the equipment, nevertheless, the equipment shall be complete and operative in all respects and shall conform to the highest standard of engineering, design and workmanship.

2.0.0 SCOPE OF WORK

The scope of work shall include but not limited to the following:

- 66 kV, XLPE power cables
- 11 kV, XLPE unearthed grade power cables
- 1.1kV, PVC power cables
- 1.1kV grade PVC control cables
- Special cables for excitation system etc.
- Special cables for cranes, hoists, etc.
- Heat resistant cables.
- Fire proof cables

3.0.0 CODES & STANDARDS

- IS 1554 : PVC insulated (heavy duty) electric cables.
- IS 7098 : Cross-linked polyethylene insulated PVC sheathed cables for working voltages upto and including 33 kV.
- IS -3961 : Recommended current ratings for cables.
- IS -3975 : Specification for Mild steel wires, formed wires & tapes for armouring of cables.
- IS -8130 : Specification for conductors for insulated electric cables & flexible cords.

Cables shall also conform to other relevant IS /IEC standards amended up to date.

4.0.0 TECHNICAL REQUIREMENT

4.1.0 Design Criteria

4.1.1 Power cables shall be sized to satisfy the following Criteria:

- System short circuit current.
- Derating factors due to higher ambient temperature and grouping of cables.
- Continuous current rating.
- Voltage drop during starting and continuous operation.
- Standardisation of the cable size to minimise too many sizes of cables.

4.1.2 Power cables shall withstand the fault current of the circuit for the duration not less than the max. time taken by the primary protective system to isolate the fault. Cables shall be sized for the following short circuit rating.

Cables from 11kV Switchboard to LT transformers	:	40 kA for 0.16 sec.
Cables from 11kV Switchboard to Motors	:	40 KA for 0.16 sec
Incoming cables to 415 V PMCC (Breaker operated)	:	50 kA for 1 sec.
Cables from 415 V PMCC to Motors	:	50 kA for 0.16 sec ACB operated
Tie / Incomer feeders at 11kV if any	:	40kA for 1 sec

4.1.3 To maintain voltage at motor terminals /equipment end with in desirable limit, it is proposed to limit the voltage drop in the cables with in the following limits:

Steady state Voltage drop (Continuous running condition)	: 3%
Transient state voltage drop (During Motor Starting)	: 10 %

4.1.4 Following design ambient shall be considered while sizing the cables.

Design Ambient Air Temperature	:	50 degree C
Ground Temperature	:	40 degree C

4.1.5 Cables installed in hot areas shall be specially designed for that ambient temperature.

4.1.6 Cables shall be adequately sized to take care of any derating due to fire stop cable sealing/fire resistant coating.

4.1.7 Separate cables shall be provided for circuit of different plant and auxiliaries for different voltage levels and for circuits fused separately. Power, control and instrumentation circuits shall be taken through separate cables.

4.2.0 Constructional requirement

4.2.1 Power Cables up to 300sqmm size shall be of Multicore cables. For above 300sqmm size single core cables shall be considered. All 11kV power cables shall be XLPE insulated. LV power cables shall be XLPE insulated type.

4.2.2 XLPE insulation shall be suitable for continuous conductor temperature of 90 °C and short circuit conductor temperature of 250°C.

4.2.3 66 kV cables will be of stranded copper conductor, Triple extruded insulation with field limiting layers of cross linked polyethylene, bedding tapes, copper screen in longitudinally water tight embedding, crepe paper, copolymer coated aluminum tape.

4.2.4 11kV cables shall be 11/6.35kV (UE) grade (suitable for 11 kV unearthed system) multi stranded compacted copper conductor, XLPE insulated, screened, extruded PVC inner sheathed, armoured, overall FRLS PVC sheathed cables conforming to IS 7098.

4.2.5 LV Power cables shall be of 1.1 kV grade, XLPE insulated, PVC inner sheathed (extruded), armoured, FRLS PVC outer sheathed, compacted Copper conductor upto 10 sq.mm and above 10 sq.mm aluminium conductor. LT XLPE cables shall be conforming to IS 7098-Part- & LT PVC cables shall be conforming to IS 1554.

4.2.6 Control cables shall be of 1.1 kV grade, multicore, XLPE insulated, PVC inner sheathed, armoured, FRLS PVC outer sheathed stranded copper conductor conforming to IS: 1554.

4.2.7 The signal cables shall be of 650 / 1100V grade, 0.5 sq. mm, single pair / multipair, stranded copper conductor, PVC insulated, cores laid up, extruded PVC inner sheathed, armoured and extruded FRLS PVC outer sheathed.

4.2.8 For single core armoured cables, armouring shall be of aluminium wire. For multicore armoured cables, armouring shall be of galvanised steel strip/wire as per applicable IS.

4.2.9 The cable cores shall be laid up with fillers between the cores wherever necessary. All the cables shall have distinct extruded PVC inner sheath.

4.2.10 Conductor of Copper cables shall have plain annealed copper. All the conductors shall be multi-stranded.

4.2.11 Cables shall be suitable for laying on racks, in ducts, trenches with chances of flooding by water and shall also be suitable for directly buried installation. All the cables shall be flame retardant low smoke (FRLS) type designed to withstand mechanical, electrical and thermal stresses developed under steady state and transient operating conditions.

4.2.12 Outer sheath shall be of PVC black in colour having following FRLS properties.

- Oxygen index of not less than 29.
- Acid gas emission of max. 20%.
- Smoke density of not more than 60%.

4.2.13 The cables shall meet flammability test as per IEEE – 383.

4.2.14 All the cables shall be protected against rodent and termite attack. Necessary chemicals shall be added in to the PVC compound of the outer sheath.

4.2.15 Cables shall be supplied in wooden or steel drums of heavy construction. Wooden drums shall comply with IS 10418.

5.0.0 TESTS

Cables offered shall be of type tested and proven type. Type test certificates for test conducted earlier on similar rating shall be furnished. Routine tests, Acceptance tests and all special tests for FRLS properties shall be carried out for all the cables as per applicable standards. The sample shall be drawn at the rate of one per type and size for every lot offered for inspection.

FIRST ANGLE PROJECTION

(ALL DIMENSIONS ARE IN mm)

DRG. NO. 4-38121-03581

SH. 01 OF 10

THE INFORMATION ON THIS DOCUMENT IS THE PROPERTY OF BHARAT HEAVY ELECTRIALS LIMITED. IT MUST NOT BE USED DIRECTLY OR INDIRECTLY IN ANY WAY DETRIMENTAL TO THE INTEREST OF THE COMPANY

COMPUTER FILE NAME

REF. DRG. NO.

DESIGN. AND DATE

INVENTORY NO

DRIVE CONTROL PHILOSOPHY

DATE	NO.	REVISION	DRAWN	CHECKED

OIL & NATURAL GAS CORPORATION LIMITED

1 x 51MW COMBINED CYCLE CAPTIVE POWER PLANT

TITLE: **DRIVE CONTROL PHILOSOPHY**

CONSULTANT

FICHTNER CONSULTING ENGINEERS PVT. LTD.

REV.	DATE	ALTERED	
		CHD/APPD	
ZONE			

REV.	DATE	ALTERED	
02	23.07.15	CHD/APPD	SUJATHA / SEKHAR
ZONE		Document is revised as per Fichtner comments and changes are highlighted with cloud marks & blue colored texts.	

REV.	DATE	ALTERED	
01	15.05.15	CHD/APPD	SUJATHA / SEKHAR
ZONE		Document is revised as per Fichtner comments and changes are highlighted with cloud marks & blue colored texts.	

BHARAT HEAVY ELECTRICALS LTD., HYDERABAD

DEPT CODE		NAME	SIGN	DATE
450	DRN.	D.K.MOHAN	–sd–	28.10.14
	CHKD.	SUJATHA	–sd–	28.10.14
	APPD.	SEKHAR	–sd–	28.10.14

SUBMITTED FOR: ✓ APPROVAL / INFORMATION / CONSTRUCTION / JOB No:

BHEL DRAWING NO: **4-38121-03581**

SCALE N.T.S

VSP DRAWING NO:

SHEET 01 OF 10

REV.No. 02

BHEL AND EDAS INFORMATICS CENTRE

RESTRICTED USE

Thu 23 15:40 2015

This Drawing is printed from Engineering Digital Archive System (EDAS).
Therefore signatures are not essentially required.

COPYRIGHT AND CONFIDENTIAL
The information on this document is the property of BHARAT HEAVY ELECTRICALS LIMITED,
It must not be used directly or indirectly in any way detrimental to the interest of the company.

The control philosophy for different type of drives such as Bi-directional, Unidirectional, Pneumatic operated is detailed below:

A. Bi-directional drives (Open/ Close OR Inching type)

1) All bi-directional drives are provided with **Non-integral starters** and these drives shall be operable from Remote i.e. from Central Control Room (CCR) / local control panel.

2) Local control stations (LCS) shall be provided for all bi-directional drives. LCS shall have push button for Open and Close operation and for Emergency Stop operation push buttons shall be of stay-put and lockable type. Open, Close and Emergency stop push button from LCS shall be wired to MCC. (Open – 'NO' contact; Close – 'NC' Contact; Emergency stop pushbutton – 'NC' Contact ;). The EPB (stay put type) will be provided with press to lock and turn to release type, keyless mechanism

3) Remote manual operation shall be done from DCS Operator work station [OWS] based on receipt of Ready To Start [RTS] feedback from MCC.

4) RTS feedbacks shall be generated in MCC when following conditions are met:
   a) Stop PB in MCC and LCS are not pressed.
   b) MCC Control supply is healthy.
   c) Thermal overload relay not operated.
   d) Local/Remote switch located in MCC is in REMOTE

5) Remote Latched control commands i.e. open and close (separate and independent), generated from DCS shall be issued to MCC through interposing relays located in DCS. The open & close commands shall be reset from Limit switch (LS) feedback. The LS feedback is taken from actuator to MCC. The LS feedback is taken to DCS through MCC with multiplication relay in MCC.

6) Necessary electrical protections shall be realized at MCC, whereas process interlocks and protections shall be realized in DCS.

7) Interrogation voltage for MCC commands is 110 AC and same shall be powered from MCC

8) Following signal exchange shall take place between MCC & DCS.
   a) Valve open command & close command.
   b) Valve stop command for inching type MOVs.
   c) "Motor ready to start" (Emergency stop push button not operated, Over load relay not operated and Local/Remote switch in remote).
   d) Valve status limit switch feedback (open & close)
   e) Valve torque switch feedbacks (open & close)

9) Following signal exchange shall take place from valve actuator to DCS.
   a) Valve position feedback (4-20 mA) for inching duty drives.

10) Following signal exchange shall take place from valve actuator to MCC.
   a) Valve status feedback by means of end position limit switch contact (open & close).
   b) Torque switches contacts (open & close).

B. Unidirectional LT Drives (Contactor Operated)

1) Unidirectional LT drives shall be operable from Remote i.e. from CCR.

2) Local control stations (LCS) shall be provided for all LT drives. LCS shall have Emergency Stop [EPB] push button and shall be hard wired directly to MCC. (Emergency Stop – 'NC' Contact). The EPB (stay put type) will be provided with press to lock and turn to release type, keyless mechanism

3) Two-position lockable selector switch (Local-Remote) shall be located in the MCC. If the selector switch is in "Remote" position the operator shall able to start from DCS provided the start permissive interlocks are satisfied. If the selector switch is in "Local" position, only test closing shall be possible from MCC.

4) Remote manual operation shall be done from DCS Operator work station [OWS] based on receipt of Ready To Start [RTS] feedback from MCC. Accordingly suitable provision shall be made in DCS.

5) RTS feedbacks shall be generated in MCC when following conditions are met:

COPYRIGHT AND CONFIDENTIAL
The information on this document is the property of BHARAT HEAVY ELECTRICALS LIMITED.
It must not be used directly or indirectly in any way detrimental to the interest of the company.

a) Stop PB in MCC and LCS are not pressed.
b) MCC Control supply is healthy.
c) Thermal overload relay not operated.
d) Local/Remote switch located in MCC is in REMOTE

6) Remote control commands i.e. Start and Stop (separate and independent commands), generated from DCS shall be issued to MCC through interposing relays located in DCS. Interrogation voltage for MCC commands is 110 AC and same shall be powered from MCC

7) Necessary electrical protections for the drive shall be realized at MCC, whereas process interlocks and protections are realized in DCS.

8) Following signal exchange shall take place for uni-directional drives:
a) Emergency Stop from LCS to MCC
b) Motor Start and Stop command from DCS to MCC. (Start - 'NO' contact; Stop – 'NO' contact)
c) Motor Run, Trip and RTS feedbacks from MCC to DCS. (Run & RTS feedback – 'NO' contact; Trip – 'NO' contact)
d) Motor current signal from MCC to DCS for motors rated above 30kW and for Critical drives (Analog signal)

C. Unidirectional LT/HT Drives (Breaker Operated)

1) Unidirectional LT/HT drives shall be operable from Remote i.e. from CCR.

2) Local control stations (LCS) shall be provided for all drives. LCS shall have Emergency Stop [EPB] push button and shall be hard wired directly to MCC. (Emergency Stop – 'NO' Contact). The EPB (stay put type) will be provided with press to lock and turn to release type, keyless mechanism

3) Two-position lockable selector switch (Local-Remote) shall be located in the MCC. If the selector switch is in "Remote" position the operator shall able to start from DCS provided the start permissive interlocks are satisfied. If the selector switch is in "Local" position, only test closing shall be possible from MCC.

4) Remote manual operation shall be done from DCS Operator work station [OWS] based on receipt of Ready To Start [RTS] feedback from MCC. Accordingly suitable provision shall be made in DCS.

5) RTS feedbacks shall be generated in MCC when following conditions are met:
a) Stop PB in MCC and LCS are not pressed.
b) MCC Control supply is healthy.
c) Thermal overload relay not operated.
d) Local/Remote switch located in MCC is in REMOTE (i.e. breaker is in REMOTE)
e) Breaker in Service position
f) Breaker not in test position

6) Remote control commands i.e. Start and Stop (separate and independent commands), generated from DCS shall be issued to MCC through interposing relays located in DCS.

7) Necessary electrical protections for the drive shall be realized at MCC, whereas process interlocks and protections are realized in DCS.

8) Following signal exchange shall take place for uni-directional drives:
a) Emergency Stop from LCS to MCC
b) Motor Start and Stop command from DCS to MCC. (Start - 'NO' contact; Stop – 'NO' contact)
c) Motor Run, Trip, Stop and RTS feedbacks from MCC to DCS. (Run & RTS feedback – 'NO' contact; Trip – 'NO' contact; Stop – 'NO' contact)
d) 4-20mA Motor current signal from transducer located in MCC to DCS

D. Unidirectional Drives (VFD Operated)

1) Unidirectional VFD operated drives shall be operable from Remote i.e. from CCR.

2) Local control stations (LCS) shall be provided for all VFD drives. LCS shall have Emergency Stop [EPB] push button and shall be hard wired directly to VFD Panel.

3) Remote manual operation shall be done from DCS Operator work station [OWS] based on receipt of Ready To

COPYRIGHT AND CONFIDENTIAL
The information on this document is the property of BHARAT HEAVY ELECTRICALS LIMITED.
It must not be used directly or indirectly in any way detrimental to the interest of the company.

Start [RTS] feedback from VFD panel. Accordingly suitable provision shall be made in DCS.

4) Remote control commands i.e. Start and Stop (separate and independent commands), generated from DCS shall be issued to VFD Panel.

5) Necessary electrical protections for the drive shall be realized at VFD panel, whereas process interlocks and protections are realized in DCS.

6) Following signal exchange shall take place for VFDs:
   a) VFD Start command (from DCS to VFD System) [Start – 'NO' contact]
   b) VFD stop command (from DCS to VFD System) [Stop – 'NO' contact]
   c) VFD Start permissive feedback (from VFD system to DCS) [RTS – 'NO' contact]
   d) VFD Run feedback (from VFD system to DCS) [Run – 'NO' contact]
   e) VFD fault feedback (from VFD system to DCS) [Fault – 'NO' contact]
   f) VFD Stop feedback (from VFD system to DCS) [Stop – 'NO' contact]
   g) VFD actual Speed indication (from VFD system to DCS) [analog signal]
   h) VFD actual current indication (from VFD system to DCS) [analog signal]
   i) VFD speed reference (from DCS to VFD system) [Analog signal]
   j) VFD output breaker Close feedback (from VFD system to DCS) [CLOSE – 'NO' contact]
   k) VFD output changeover breaker Close feedback (from VFD system to DCS) [CLOSE – 'NO' contact]
   l) Spare VFD selected (for BFP-1 operation) (from DCS to VFD System) [VFD-4 sel – 'NO' contact]

7) Following signal exchange shall take place between DCS & MCC:
   a) VFD Upstream 11 kV breaker Open command (from DCS to MCC) [Start – 'NO' contact]
   b) VFD Upstream 11 kV breaker Close command (from DCS to MCC) [Stop – 'NO' contact]
   c) VFD Upstream 11 kV breaker Ready (RTS) feedback (from MCC to DCS) [RTS – 'NO' contact]
   d) VFD Upstream 11 kV breaker Open feedback (from MCC to DCS) [OPEN – 'NO' contact]
   e) VFD Upstream 11 kV breaker Close feedback (from MCC to DCS) [CLOSE – 'NO' contact]
   f) VFD Upstream 11 kV breaker Trip feedback (from MCC to DCS) [TRIP – 'NO' contact]

E. Solenoid Operated Drives

1) Solenoid operated drives shall be operated from remote from CCR. Local operation of these drives is not envisaged. Solenoid operating voltage is 24VDC which is provided from DCS.

2) Remote Latched control command i.e. Energize / De- energies shall be generated from DCS and shall be issued to the solenoid through interposing relays located in DCS.

3) Necessary process interlocks shall be realized in DCS.

4) The following signal exchange shall take place between solenoid operated drive:
   a) Valve open/close command from DCS to Field.
   b) Valve open and close feedbacks from field limit switches to DCS.

F. Analog Drives

1) The following signal exchange shall take place between Analog drive and DCS.
   a) Control valve Open/Close command (Analog output signal in 4-20mA).
   b) Control valve position feedback from position transmitter (Analog Input signal in 4-20mA)

FIRST ANGLE PROJECTION

(ALL DIMENSIONS ARE IN mm)

DCS Interface for BI-DIRECTIONAL DRIVE

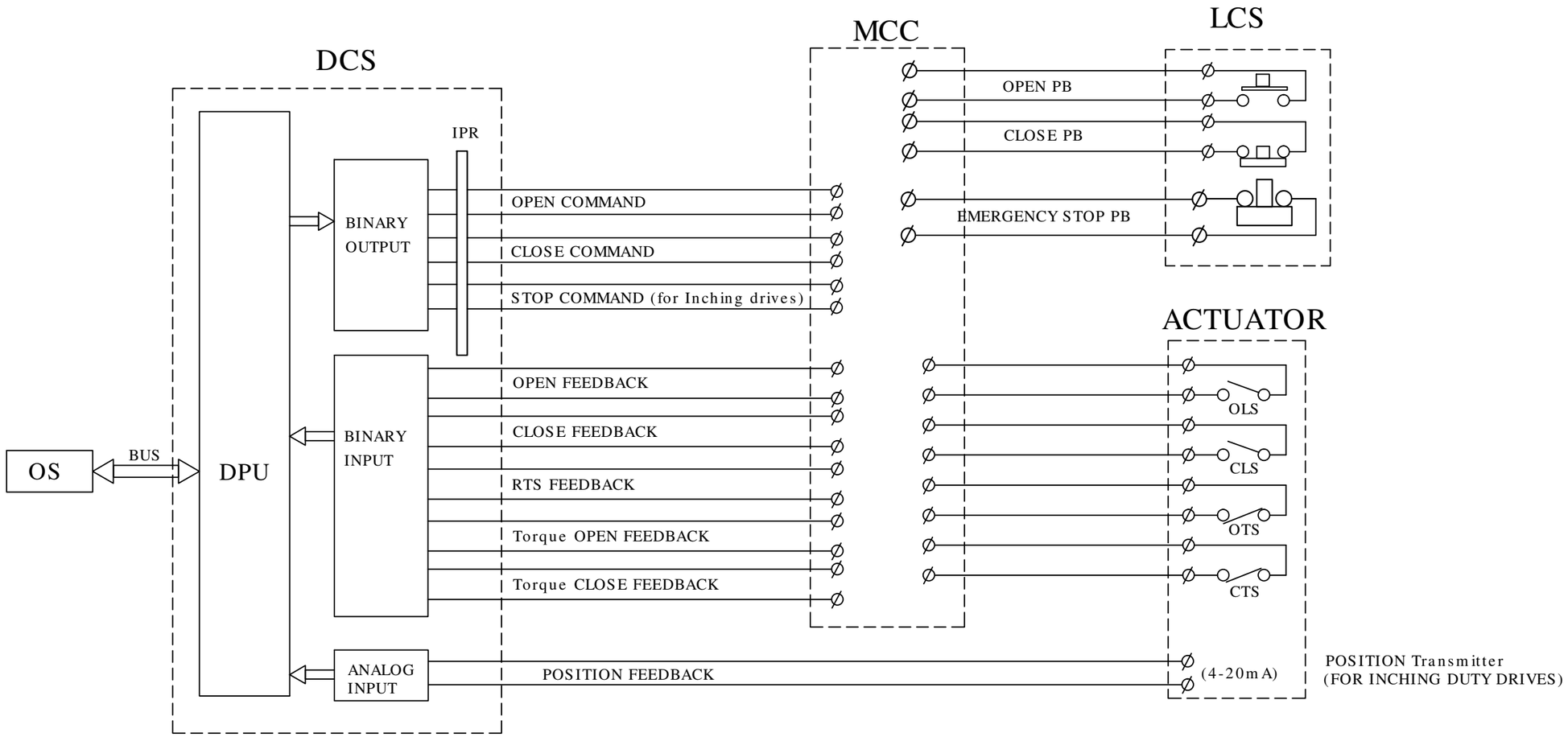

THE INFORMATION ON THIS DOCUMENT IS THE PROPERTY OF BHARAT HEAVY ELECTRICALS LIMITED. IT MUST NOT BE USED DIRECTLY OR INDIRECTLY IN ANY WAY DETRIMENTAL TO THE INTEREST OF THE COMPANY

COMPUTER FILE NAME | REF. DRG. NO. | DESIGN. AND DATE | INVENTORY NO

BHEL HYD EDAS INFORMATICS CENTRE
RESTRICTED USE

REV.	DATE	ALTERED	REV.	DATE	ALTERED	REV.	DATE	ALTERED
		CHD/APPD	02	23.07.15	SUJATHA / CHD/APPD SEKHAR	01	15.05.15	SUJATHA / CHD/APPD SEKHAR
ZONE			ZONE		Document is revised as per Fichtner comments and changes are highlighted with cloud marks & blue colored texts.	ZONE		Document is revised as per Fichtner comments and changes are highlighted with cloud marks & blue colored texts.

BHARAT HEAVY ELECTRICALS LTD., HYDERABAD

DEPT CODE		NAME	SIGN	DATE
450	DRN.	D.K.MOHAN	–sd–	28.10.14
	CHKD.	SUJATHA	–sd–	28.10.14
	APPD.	SEKHAR	–sd–	28.10.14

SUBMITTED FOR: ✓ APPROVAL / INFORMATION / CONSTRUCTION / JOB No:

BHEL DRAWING NO: 4-38121-03581

SCALE N.T.S

VSP DRAWING NO:

SHEET 05 OF 10

REV.No. 02

N Thu 23 15:40 2015

This Drawing is printed from Engineering Digital Archive System (EDAS).
Therefore signatures are not essentially required.

FIRST ANGLE PROJECTION

(ALL DIMENSIONS ARE IN mm)

DCS Interface for UNI-DIRECTIONAL LT DRIVE (Contactor operated)

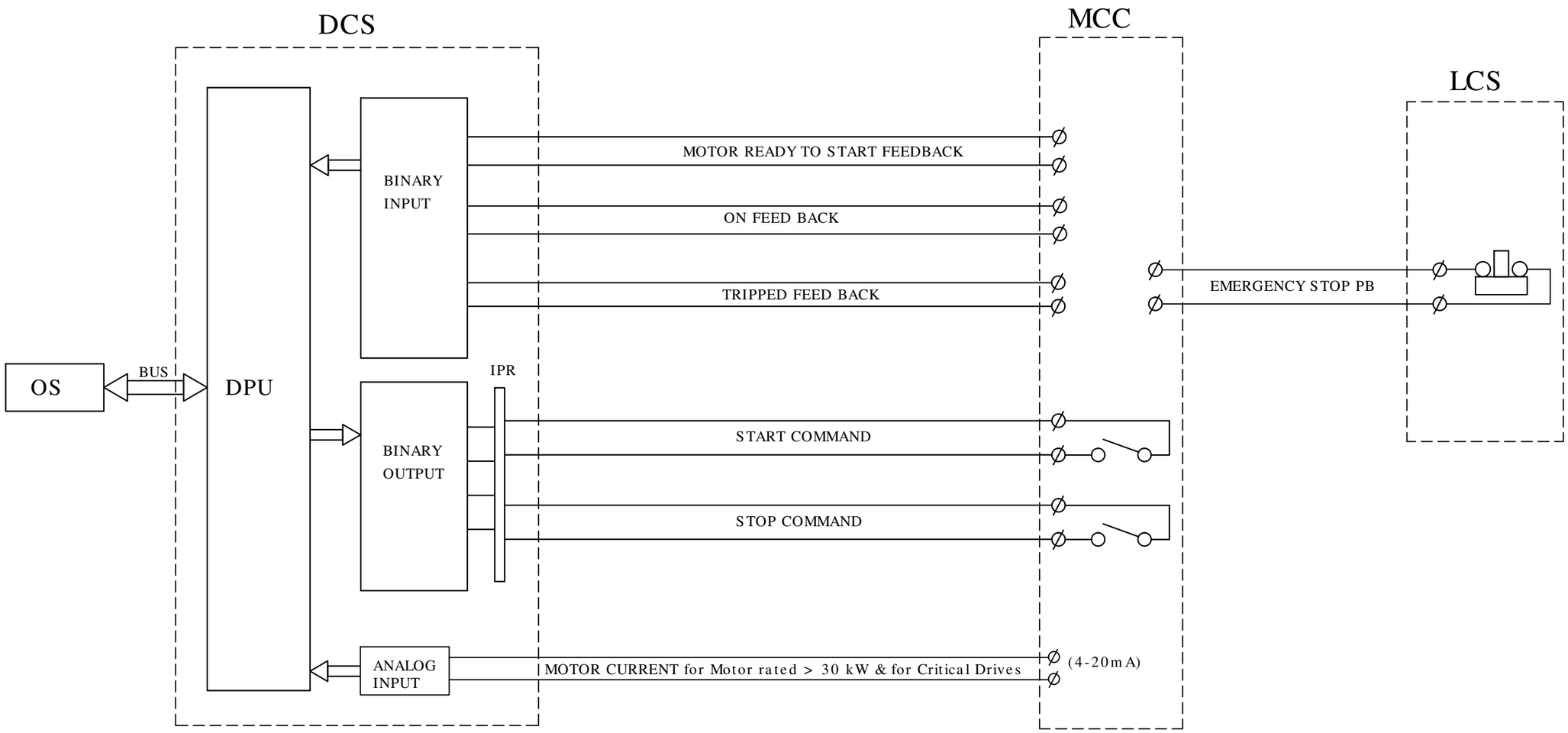

THE INFORMATION ON THIS DOCUMENT IS THE PROPERTY OF BHARAT HEAVY ELECTRICALS LIMITED. IT MUST NOT BE USED DIRECTLY OR INDIRECTLY IN ANY WAY DETRIMENTAL TO THE INTEREST OF THE COMPANY

COMPUTER FILE NAME | REF. DRG. NO. | DATE | REVISION NO

INVENTORY NO

BHEL R&D EDAS INFORMATICS CENTRE

RESTRICTED USE

REV.	DATE	ALTERED	REV.	DATE	ALTERED	REV.	DATE	ALTERED
		CHD/APPD	02	23.07.15	CHD/APPD SUJATHA SEKHAR	01	15.05.15	CHD/APPD SUJATHA SEKHAR
ZONE			ZONE		Document is revised as per Fichtner comments and changes are highlighted with cloud marks & blue colored texts.	ZONE		Document is revised as per Fichtner comments and changes are highlighted with cloud marks & blue colored texts.

BHARAT HEAVY ELECTRICALS LTD., HYDERABAD

DEPT CODE		NAME	SIGN	DATE
450	DRN.	D.K.MOHAN	–sd–	28.10.14
	CHKD.	SUJATHA	–sd–	28.10.14
	APPD.	SEKHAR	–sd–	28.10.14

SUBMITTED FOR: ✓ APPROVAL | INFORMATION | CONSTRUCTION | JOB No:

BHEL DRAWING NO: 4-38121-03581

SCALE N.T.S

VSP DRAWING NO:

SHEET 06 OF 10

REV.No. 02

Thu 23 15:40 2015

This Drawing is printed from Engineering Digital Archive System (EDAS).
Therefore signatures are not essentially required.

FIRST ANGLE PROJECTION

(ALL DIMENSIONS ARE IN mm)

DCS Interface for UNI-DIRECTIONAL LT/HT DRIVE (Breaker operated)

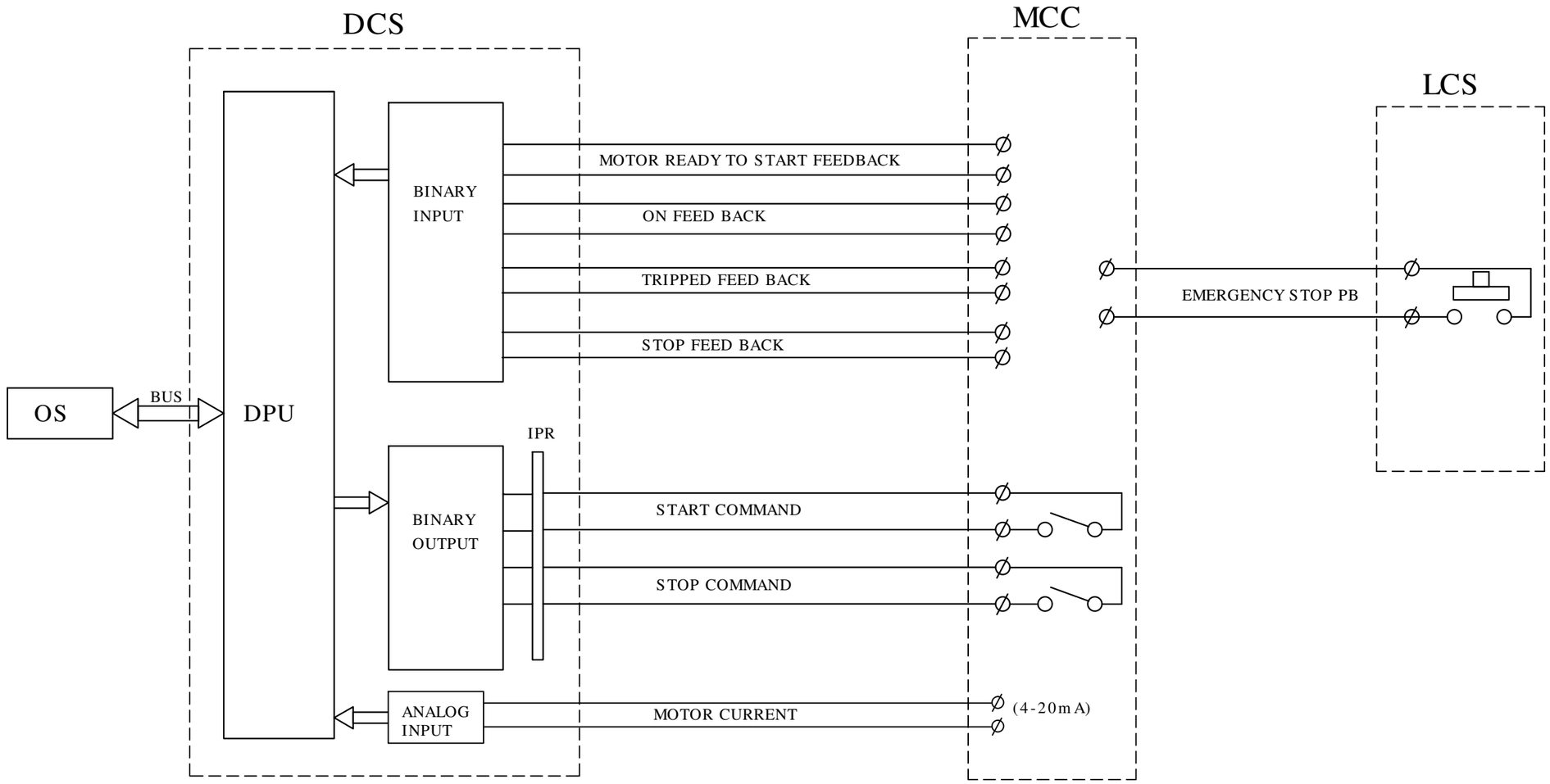

THE INFORMATION ON THIS DOCUMENT IS THE PROPERTY OF BHARAT HEAVY ELECTRICALS LIMITED. IT MUST NOT BE USED DIRECTLY OR INDIRECTLY IN ANY WAY DETRIMENTAL TO THE INTEREST OF THE COMPANY

REV.	DATE	ALTERED	REV.	DATE	ALTERED	REV.	DATE	ALTERED
		CHD/APPD	02	23.07.15	SUJATHA / CHD/APPD SEKHAR	01	15.05.15	SUJATHA / CHD/APPD SEKHAR
ZONE			ZONE		Document is revised as per Fichtner comments and changes are highlighted with cloud marks & blue colored texts.	ZONE		Document is revised as per Fichtner comments and changes are highlighted with cloud marks & blue colored texts.

BHARAT HEAVY ELECTRICALS LTD., HYDERABAD

DEPT CODE		NAME	SIGN	DATE
450	DRN.	D.K.MOHAN	–sd–	28.10.14
	CHKD.	SUJATHA	–sd–	28.10.14
	APPD.	SEKHAR	–sd–	28.10.14

SUBMITTED FOR: ✓ APPROVAL / INFORMATION / CONSTRUCTION

JOB No:

BHEL DRAWING NO: 4-38121-03581

SCALE N.T.S

VSP DRAWING NO:

SHEET 07 OF 10

REV.No. 02

INVENTORY NO | DATE | REF. DRG. NO. | COMPUTER FILE NAME

BHEL AND EDAS INFORMATICS CENTRE

RESTRICTED USE

Thu 23 15:40 2015

This Drawing is printed from Engineering Digital Archive System (EDAS).
Therefore signatures are not essentially required.

FIRST ANGLE PROJECTION

(ALL DIMENSIONS ARE IN mm)

DCS Interface for VFD operated DRIVE

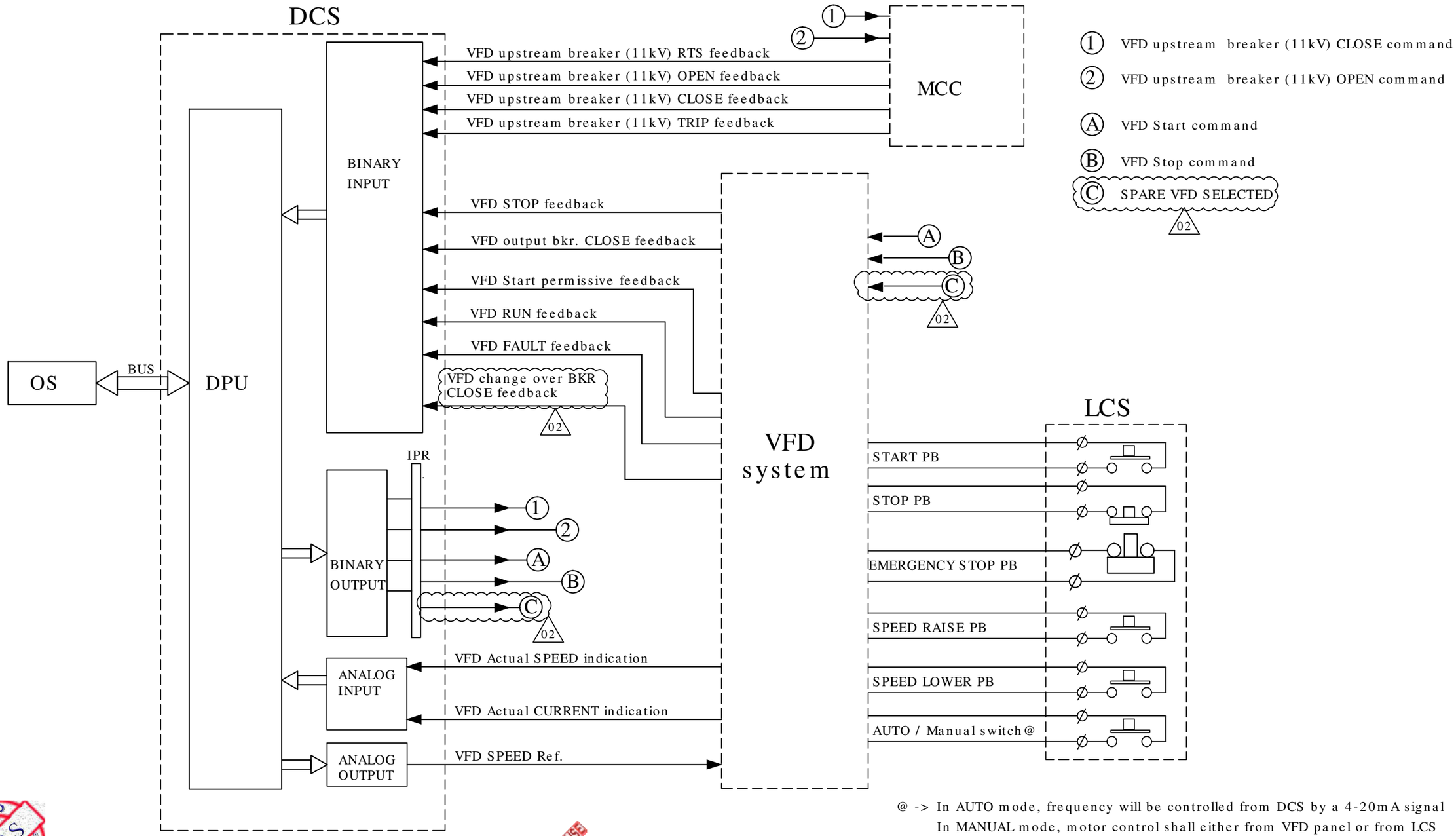

@ -> In AUTO mode, frequency will be controlled from DCS by a 4-20mA signal
In MANUAL mode, motor control shall either from VFD panel or from LCS

THE INFORMATION ON THIS DOCUMENT IS THE PROPERTY OF BHARAT HEAVY ELECTRICALS LIMITED. IT MUST NOT BE USED DIRECTLY OR INDIRECTLY IN ANY WAY DETRIMENTAL TO THE INTEREST OF THE COMPANY

COMPUTER FILE NAME | REF. DRG. NO. | SIGN AND DATE | INVENTORY NO

BHEL-HYD EDAS INFORMATICS CENTRE

RESTRICTED USE

REV.	DATE	ALTERED	REV.	DATE	ALTERED	REV.	DATE	ALTERED
		CHD/APPD	02	23.07.15	SUJATHA / SEKHAR	01	15.05.15	SUJATHA / SEKHAR
ZONE			ZONE		Document is revised as per Fichtner comments and changes are highlighted with cloud marks & blue colored texts.	ZONE		Document is revised as per Fichtner comments and changes are highlighted with cloud marks & blue colored texts.

BHARAT HEAVY ELECTRICALS LTD., HYDERABAD

DEPT CODE 450

	NAME	SIGN	DATE
DRN.	D.K.MOHAN	–sd–	28.10.14
CHKD.	SUJATHA	–sd–	28.10.14
APPD.	SEKHAR	–sd–	28.10.14

SUBMITTED FOR: ✓ APPROVAL; INFORMATION; CONSTRUCTION; JOB No:

BHEL DRAWING NO: 4-38121-03581

SCALE N.T.S

VSP DRAWING NO:

SHEET 08 OF 10

REV.No. 02

Jul Thu 23 15:40 2015

This Drawing is printed from Engineering Digital Archive System (EDAS)
Therefore signatures are not essentially required.

FIRST ANGLE PROJECTION

(ALL DIMENSIONS ARE IN mm)

THE INFORMATION ON THIS DOCUMENT IS THE PROPERTY OF BHARAT HEAVY ELECTRICALS LIMITED. IT MUST NOT BE USED DIRECTLY OR INDIRECTLY IN ANY WAY DETRIMENTAL TO THE INTEREST OF THE COMPANY

DCS Interface for Solenoid (24V DC) operated ON-OFF valve

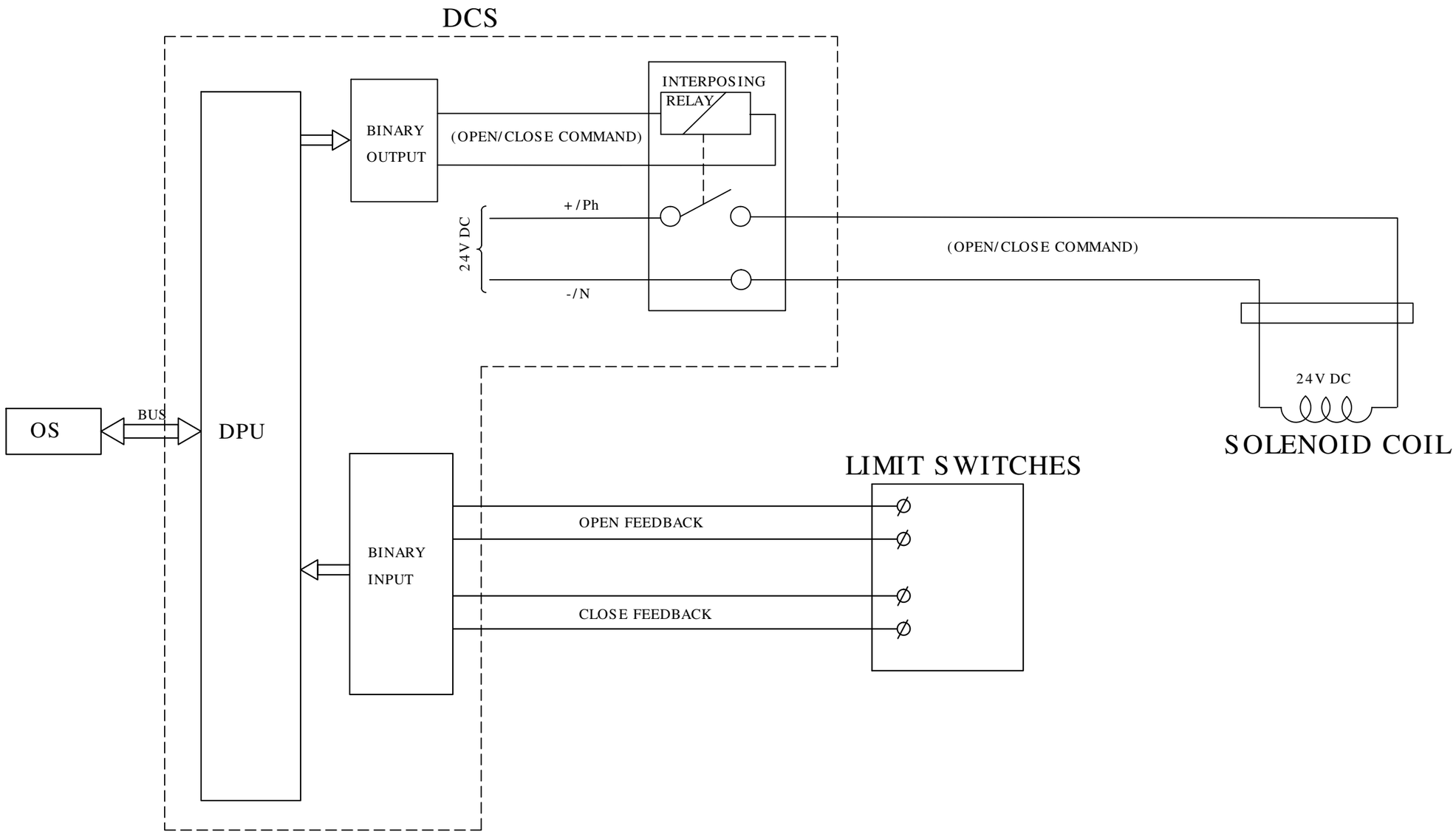

REV.	DATE	ALTERED	REV.	DATE	ALTERED	REV.	DATE	ALTERED
		CHD/APPD	02	23.07.15	SUJATHA / SEKHAR	01	15.05.15	SUJATHA / SEKHAR
ZONE			ZONE		CHD/APPD	ZONE		CHD/APPD
				Document is revised as per Fichtner comments and changes are highlighted with cloud marks & blue colored texts.			Document is revised as per Fichtner comments and changes are highlighted with cloud marks & blue colored texts.	

RESTRICTED USE

BHARAT HEAVY ELECTRICALS LTD., HYDERABAD

DEPT CODE		NAME	SIGN	DATE
450	DRN.	D.K.MOHAN	–sd–	28.10.14
	CHKD.	SUJATHA	–sd–	28.10.14
	APPD.	SEKHAR	–sd–	28.10.14

SUBMITTED FOR: ✓ APPROVAL / INFORMATION / CONSTRUCTION

JOB No:

BHEL DRAWING NO: 4-38121-03581

SCALE N.T.S

VSP DRAWING NO:

SHEET 09 OF 10

REV.No. 02

COMPUTER FILE NAME | REF. DRG. NO. | DATE | SIGN. AND | INVENTORY NO

BHEL HYD EDAS INFORMATICS CENTRE

Thu 23 15:40 2015

This Drawing is printed from Engineering Digital Archive System (EDAS).
Therefore signatures are not essentially required.

FIRST ANGLE PROJECTION

(ALL DIMENSIONS ARE IN mm)

THE INFORMATION ON THIS DOCUMENT IS THE PROPERTY OF BHARAT HEAVY ELECTRICALS LIMITED. IT MUST NOT BE USED DIRECTLY OR INDIRECTLY IN ANY WAY DETRIMENTAL TO THE INTEREST OF THE COMPANY

COMPUTER FILE NAME

REF. DRG. NO.

DESIGN. AND DATE

INVENTORY NO

DCS Interface for ANALOG DRIVE

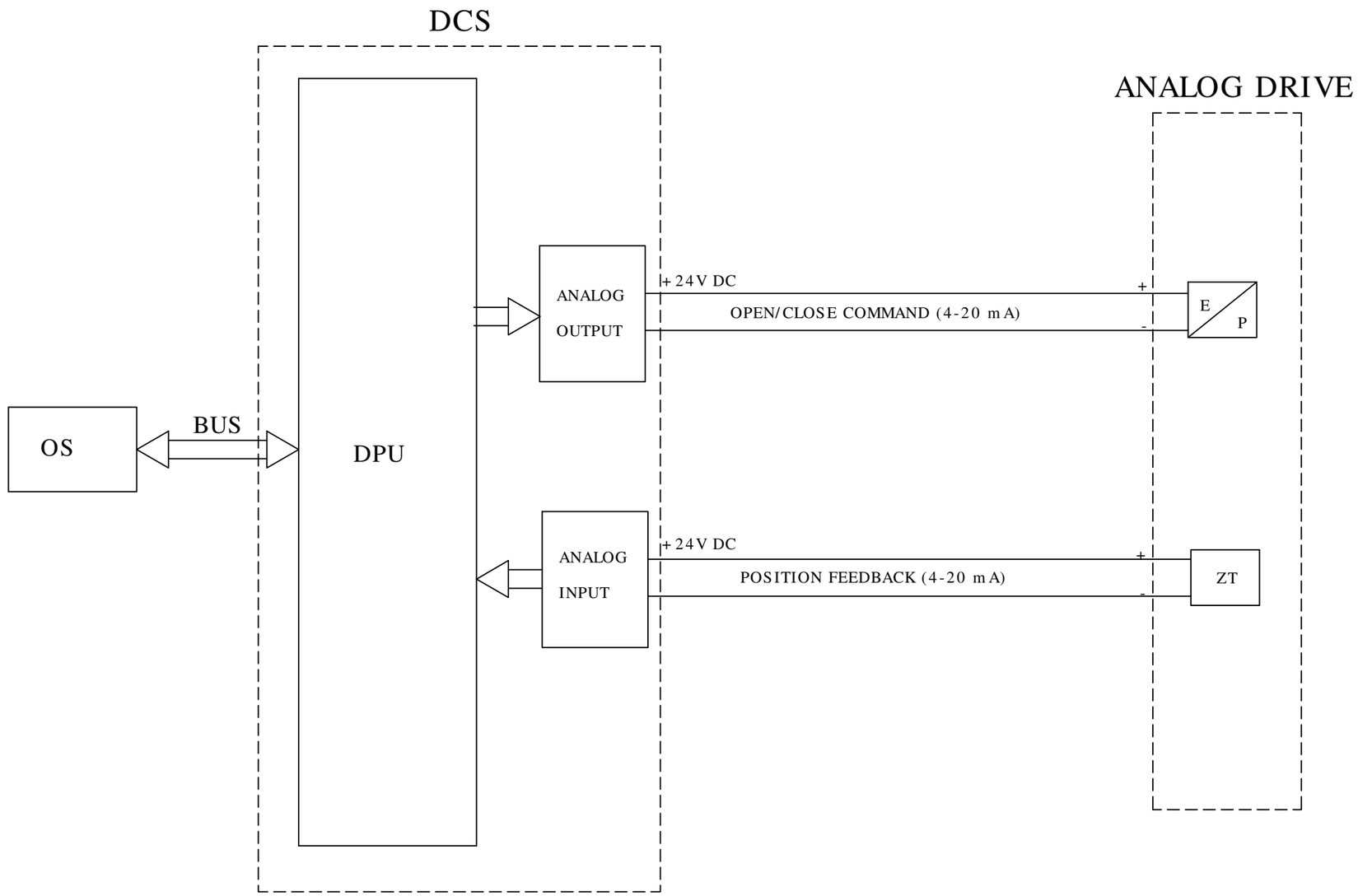

BHEL HYD EDAS INFORMATION CENTRE

RESTRICTED USE

REV.	DATE	ALTERED	REV.	DATE	ALTERED	REV.	DATE	ALTERED
		CHD/APPD	02	23.07.15	SUJATHA CHD/APPD SEKHAR	01	15.05.15	SUJATHA CHD/APPD SEKHAR
ZONE			ZONE		Document is revised as per Fichtner comments and changes are highlighted with cloud marks & blue colored texts.	ZONE		Document is revised as per Fichtner comments and changes are highlighted with cloud marks & blue colored texts.

BHARAT HEAVY ELECTRICALS LTD., HYDERABAD

DEPT CODE		NAME	SIGN	DATE
450	DRN.	D.K.MOHAN	-sd-	28.10.14
	CHKD.	SUJATHA	-sd-	28.10.14
	APPD.	SEKHAR	-sd-	28.10.14

SUBMITTED FOR: ✓ APPROVAL / INFORMATION / CONSTRUCTION / JOB No:

BHEL DRAWING NO: 4-38121-03581

SCALE N.T.S

VSP DRAWING NO:

SHEET 10 OF 10

REV.No. 02

Thu 23 15:40 2015

This Drawing is printed from Engineering Digital Archive System (EDAS).
Therefore signatures are not essentially required.

COPYRIGHT AND CONFIDENTIAL
The information on this document is the property of BHARAT HEAVY ELECTRICALS LIMITED,
It must not be used directly or indirectly in any way detrimental to the interest of the company.

SPECIFICATION FOR INSTRUMENTATION AND CONTROL FOR PACKAGE UNITS

COPYRIGHT AND CONFIDENTIAL
The information on this document is the property of BHARAT HEAVY ELECTRICALS LIMITED .
It must not be used directly or indirectly in any way detrimental to the interest of the company.

CONTENTS

1.0	SCOPE	3
1.1	Package Scope Matrix	3
1.2	Proven Track Record	4
1.3	Deviation	4
1.4	P&IDs and Instrument Tag Numbering	4
1.5	Codes and Standards	5
1.6	Units and Charts	6
2.0	STATUTORY REQUIREMENTS / APPROVALS	6
3.0	SPECIFICATIONS OF INSTRUMENTS AND CONTROL	6
4.0	INSTRUMENT ERECTION MATERIAL	11
5.0	INSTALLATION AND PROCESS CONNECTION	12
5.1	Instrument Installation	12
5.2	Process Connection	12
6.0	TESTING AND CALIBRATION	12
7.0	COMMISSIONING	13
8.0	SPARES	13
8.1	Mandatory Spares	13
8.2	Commissioning Spares	13
8.3	Two years Operational & Maintenance Spares	14
9.0	DOCUMENTATION	14
10.0	IDENTIFICATION AND MARKING	15
11.0	PACKING AND SHIPPING	15
12.0	WARRANTY	15
13.0	ANNEXURE – 1 (PACKAGE SCOPE PHILOSOPHY)	
14.0	ANNEXURE – 2 (INSTRUMENT DATASHEETS)	
15.0	ANNEXURE – 3 (PROCESS CONNECTION DETAILS)	
16.0	ANNEXURE – 4 (INSPECTION TEST PLAN)	
17.0	ANNEXURE – 5 (INSTRUMENT INSTALLATION DRAWINGS)	

COPYRIGHT AND CONFIDENTIAL
The information on this document is the property of BHARAT HEAVY ELECTRICALS LIMITED .
It must not be used directly or indirectly in any way detrimental to the interest of the company.

1.0 SCOPE

This specification together with relevant process parameter/ datasheet/ P&ID covers the requirements for design, engineering, inspection and supply of the instruments, control panel and instrument erection material for installation & interconnection. This general specification shall be complied by the vendor unless other contract provisions are specified by the owner / consultant.

1.1 Package Scope Matrix

The Scope of Control and Instrumentation shall be as per the following scope matrix and described in block diagram (ANNEXURE-1).

Package Type	Design, and Supply of Instruments	Supply of Hookup / Installation Material, Erection Hardware, Cabling accessories,	Supply of Junction Boxes	Supply of Branch Cable /cable trays up to Junction Box	Supply of Cable Trays, support and accessories up to control panel.	Design, Engineering, Supply of Control Panel (PLC, HMI, Etc)	Supply of Cable up to vendor supplied panels.	Supply of Cable from Local Panel to Other's System (DCS)	Design, Engg. , Supply, Erection Of y Control Room	E & C of C&I Supplies	Site Testing and Calibration
P1	√	√	#	#	#	#	#	#	#	#	#
P2	√	√	√	√	#	#	#	#	#	#	#
P3	√	√	√	√	√	√	√	#	#	√	√
P4	√	√	√	√	√	√	√	#	√	√	√

'√' Indicates the Scope of Package Vendor
'#' Indicates the Scope of Purchaser/Customer

SL.No.	NAME OF THE PACKAGE	PACKAGE TYPE	REMARKS
1	LP DOSING SYSTEM - HYDRAZINE	P2- Type	
2	LP DOSING SYSTEM – AMMONIA/MORPHOLINE	P2- Type	
3	PUMPS: 1. BFPs (HP/LP/IP) 2. CEP 3. CTP 4. CWP 5. ACW	P2- Type	
4	FUEL SYSTEM 1. GAS SCRUBBER SKIDs 2. FILTERS SKIDs 3. FORWARDING SKIDs 4. UNLOADING SKIDs 5. VANADIUM / HI-TECH SKIDs	P2- Type	
5	COOLING TOWER PACKAGE	P2- Type	
6	ATOMIZING AIR SYSTEM	P3- Type	
7	INSTRUMENT AIR PACKAGE	P3-Type	
8	NITROGEN GENERATION SYSTEM	P3-Type	

9	FUEL CENTRIFUSING SYSTEM	P3-Type	
10	WATER TREATMENT PACKAGE	P4- Type	
11	EFFLUENT TREATMENT PLANT	P4-TYPE	
12	PRE-TREATMENT PLANT	P4-Type	
13	SLUDGE TREATMENT SYSTEM	P4-Type	
14	GAS COMPRESSORS	P4-Type	
15	WATER BATH HEATER FOR GAS SYSTEM	P4-Type	
16	HOT WATER GENERATOR FOR GAS SYSTEM	P4-Type	
17	GAS COOLER SKIDS	P4-Type	
18	CIRCULATING WATER TREATMENT SYSTEM	P4-Type	

1.2 Proven Track Record

All instruments, Control System and Sub- items shall be of field proven quality both with respect to design and Materials. No items of an experimental nature shall be offered or supplied. No instrument / system requiring special maintenance or operating facilities shall be offered or supplied as far as possible.

1.3 Deviation

Bidder shall submit duly filled deviation format long within the offer, otherwise it will be presumed that there are no deviations from this specification. Offer without this deviation list will not be evaluated and shall be considered for rejection. If, there are no deviations, bidder shall submit signed copy of this format, mentioning “No Deviations”.

Sl. No.	Cl. No. of spec	Deviation	Reasons for deviation	Deviation Category	
				Product/design limitation	Optimization
1					
2					

1.4 P&IDs and Instrument Tag Numbering

Vendor shall prepare and submit a detailed P&I diagram for the system within the scope of his supply, showing all the instruments and interlock/trip operations. Each Instrument shall be given individual tag number from blocks of numbers allotted by the purchaser/ client philosophy. Symbols shall be as per ISA-S5.1 unless and otherwise specified or as per Project specific, if any will be intimated during order execution.

Instrument required for the completeness of the system but not given in the frozen P&I diagram shall be under the scope of the vendor without any price implication.
Deviation from the specification may be allowed due to sound engineering reason only after the approval from owner / consultant.

COPYRIGHT AND CONFIDENTIAL
The information on this document is the property of BHARAT HEAVY ELECTRICALS LIMITED .
It must not be used directly or indirectly in any way detrimental to the interest of the company.

1.5 Codes and Standards

Sl. No.	Standard	Description
1.	IEC 534	Industrial - Process Control Valves
2.	IEC 584	Thermocouples
3.	IEC 654	Measurement and Control equipment
4.	IEC 751	Industrial Platinum Resistance Thermometer Sensor
5.	IEC 801	Electromagnetic Compatibility for Industrial Process Measurement and Control Eqpt.
6.	IEC 902	Industrial Measurement and Control Terms and Definitions
7.	ISA S-5 .1	Instrumentation Symbols and Identification
8.	ISA S-5 3	Graphic Symbols for Distributed Control/ Shared Display Instrumentation, Logic and Computer Symbols
9.	ANSI/ISA S 5.1	Process Instrumentation Terminology
10.	ANSI/ ISA S75.01	Control Valve Equations
11.	ANSI/ ISA S75.02	Control Valve Procedure Capacity Test
12.	ANSI/ ISA S75.03	Face-to-Face Dimensions for Flanged Globe Style Control Valve Bodies
13.	ANSI/ FCI 70.02	Quality Control Standard for Control Valve Seat Leakage
14.	DIN 43760	Measurement Standard for RTD.
15.	DIN 19243	Measurement and Control Electrical Sensors, Electrical Position Sensors and Signal Converters used for Intrinsically safe two-wire DC System.
16.	EN-50-014/020	Electrical Apparatus for Potentially Explosive Atmospheres
17.	ISO 4200	Plain End Steel Tubes, Welded and Seamless - General Table of Dimensions and Masses per Unit Length.
18.	ISO 5167	Measurement of Fluid by Means of Orifice Plates, Nozzles and Venturi Tubes Inserted in Circular cross-section Conduits Running Full.
19.	API RP 520	Sizing, selection and Installation of Pressure relieving devices in Refineries
20.	API RP 521	Guide for Pressure Relieving and Depressurizing System
21.	API RP 2000	Venting Atmospheric and low pressure storage tanks
22.	API-RP-550	Manual on Installation of refinery Instruments Part-I and Control System
23.	ANSI - B 16.104	Control Valve seat leakage
24.	ISA-S 75.01	Control Valve sizing
25.	ISA S 18.1	Specifications and guides for the use of general Annunciators.
26.	IEC 529	Environmental Protection of equipment
27.	ANSI B 2.1	Pipe threads
28.	ANSI B 16.5	Steel pipe flanges, flanged valves and fittings

COPYRIGHT AND CONFIDENTIAL
The information on this document is the property of BHARAT HEAVY ELECTRICALS LIMITED .
It must not be used directly or indirectly in any way detrimental to the interest of the company.

29.	IEC 60079.11/ IEC-60079.14	Intrinsic safety code and practice
30.	IBR	Indian Boiler Regulation
31.	IS 2148	Ex.proof enclosure of electrical apparatus
32.	VDE 0815	Control and Instrument Cables

1.6 Units and Charts

Measuring units of the process variables shall be calibrated as follows:

a)	Flow	Liquid	T/h or kg/h
			m3/h (for volumetric)
		Steam	T/h or kg/h
		Gas	Nm3/h (at o °C and 1 atm)
b)	Pressure		kg/cm2g (General)
			Kg/cm2 (Absolute)
			mmH2O (Low pressure)
	Diff. pressure		kg/cm2, mm H2O
c)	Level		% of range (General)
			m (storage tank)
d)	Temperature		°C

2.0 STATUTORY REQUIREMENTS / APPROVALS

i. In the event of any conflict between this specifications, data sheets, statutory regulations, related standards, codes etc., the contractor shall refer the matter to the purchase/ purchaser's representative for clarification and only after obtaining the same should proceed with the manufacture/ engineering of the item in question.

ii. Contractor shall be responsible for obtaining all statutory approvals, as applicable for all instruments and control systems.

iii. In addition, equipments/instruments/systems located in the hazardous area shall be certified by the local statutory authorities for their use in the area of their installation. In general following certification shall be given:

- For all intrinsically safe/ FISCO/ explosion proof/flameproof equipments/ instruments/systems or equipments with any other type of protection allowable as per this package which are manufactured abroad and certified by any statutory authority like BASEEFA, FM, UL, PTB, LCIE etc. should also have the approval of Petroleum And Explosives Safety Organization (PESO)/ Chief Controller of Explosives (CCE), Nagpur.
- For all flame proof equipments manufactured locally (indigenously), the testing shall be carried out by any of the approved test house like CMRI/ERTL etc. The equipment shall in addition bear the valid approval from Petroleum And Explosives Safety Organization (PESO)/ Chief Controller of Explosives, Nagpur and a valid BIS license.
- Approvals other than above shall neither be offered nor will these be acceptable.

iv. IBR : IBR Form III shall be furnished for the inline instruments and its accessories. (For e.g. Thermowell, Control Valves, On/Off valves, Flow Elements, Pipe and Pipe fittings etc.)

3.0 SPECIFICATIONS OF INSTRUMENTS AND CONTROL

All Technical specification for field instruments shall be as per attached datasheet (ANNEXURE-2). The Package Vendor to furnish and fill the datasheet along with Make and Model No. for selected instruments for purchaser approval.

The Table indicates the minimum requirements for Instrument Selection.

COPYRIGHT AND CONFIDENTIAL
The information on this document is the property of BHARAT HEAVY ELECTRICALS LIMITED .
It must not be used directly or indirectly in any way detrimental to the interest of the company.

COPYRIGHT AND CONFIDENTIAL
The information on this document is the property of BHARAT HEAVY ELECTRICALS LIMITED .
It must not be used directly or indirectly in any way detrimental to the interest of the company.

SL No	MEASUREMENT	FUNCTION	TYPE OF INSTRUMENT	REMARKS
1	**PRESSURE INSTRUMENTS**	INDICATION	TRANSMITTER - HART / REMOTE SEAL FOR CORROSIVE OR VISCOUS SERVICE	
		ALARMS	NOT APPLICABLE	
		INTERLOCK	TRANSMITTER - HART / REMOTE SEAL FOR CORROSIVE OR VISCOUS SERVICE	
		LOCAL GAUGES	<60 kg/cm² - BOURDON TYPE > 60 kg/cm² - SOLID FRONT	
3	**LEVEL INSTRUMENTS**	INDICATION	VESSELS : > 6 MTR HEIGHT - TOP MOUNTED RADAR (HART) < 6 MTR HEIGHT – RADAR / DIAPHRAGM SEAL (HART)	
		ALARMS		
		INTERLOCK		
		LOCAL GAUGES	TRANSPARENT / REFLEX / MAGNETIC	
4	**TEMPERATURE INSTRUMENTS**	INDICATION	< 200 °C – RTD ,PT100,3 WIRE WITH REMOTE TRANSMITTER (HART) > 200 °C – THERMOCOUPLE.K-TYPE, WITH REMOTE TRANSMITTER (HART)	
		ALARMS		
		INTERLOCK		
		LOCAL GAUGES	GAS FILLED WITH SS WETTED PARTS	
		THERMOWELLS	FLANGED/SCREWED, SS	
5	**FLOW INSTRUMENTS**	INDICATION	AS PER P&IDs	
		ALARMS		
		INTERLOCK		
6	**VALVES**	FLOW/PRESS./TEMP./LEVEL	CONTROL (GLOBE TYPE)	
		SHUTDOWN	ON/OFF (BALL TYPE)	
		POSITIONER	HART TYPE	
7	**Instrument Hook up's**	<= 600# [Carbon Steel, & Stainless Steel]	SS TUBE WITH SS TUBING HOOKUP	
		>600# [Carbon Steel, & Stainless Steel]	SS PIPE WITH SS PIPING HOOKUP	
		>600# [Alloy Steel]	AS PIPE WITH AS PIPING HOOKUP	

3.1 Power Supply Requirements

i. Electric equipment power supply shall be suitable for standard voltages specified below. Voltages normally be used in shown in the below table,

Sl. No.	Description	230V AC 50 Hz. UPS	230V DC	24V DC	110 V AC	230 V AC Non-UPS
a)	Package Units	√				
b)	Alarm Annunciator					
c)	PLC					
d)	Solenoid Valves		√			
e)	I/P, Transmitters			√		
f)	Gas Detection System	√				
g)	Analyzers and					

	Analyzer System					
h)	Level Gauge Illumination					√
i)	Cabinets Lighting, Control Room					√
j)	Local Panel	√				
k)	Analyzer Shelter (415 V AC)					
l)	Air Conditioning (415 V AC)					

Note:
1. 110V/230V UPS – 1 No. Redundant Feeder at Panel.
2. 230 V AC Non-UPS – 1 No. Non-Redundant feeder,
3. Any further Power Distribution from UPS Feeder shall be by Package Vendor.

3.2 Local Control Room (NOT APPLICABLE FOR NTPC KAYAMKULAM)

i. The control equipment of P4 Type Packages, the package shall be housed in Local control room. The Control Room building shall be Civil RCC with A/C and Illumination. The building of the Local control room will be super cyclone proof design and fully air-conditioned.
ii. Operator console, auxiliary console, Panels and printers etc. for these plants shall be installed in the Local control room.
iii. Local Control Room shall be provided with false flooring above 600 mm from finish floor level for cable laying. The operator's area of the control room shall have two entry / exit and preferably one of them should be away from the plant area as a safe passage.
iv. The control room building shall be located in a safe area.
v. Inside the control room cable shall be laid in appropriate FRP raceway or prefabricated GI cable trays.
vi. Cable Entry to Control Room shall be through MCT blocks.
vii. Electric cables will usually be separated according to their service: signal cables from power cables and intrinsically safe circuit cables shall be separated from power cables.
viii. Electric wiring to be made in accordance with recommendation and codes.
ix. Air conditioning: Vendor shall provide adequate Air conditioning (1 No. Working + 1 No. Stand By).
x. Illumination: Vendor shall provide adequate illumination.

3.3 Local Control Panel (NOT APPLICABLE FOR NTPC KAYAMAKULAM)

i. Control panel shall be fabricated in best workmanship manner. The panel shall be made of 3 mm thick CRCA sheet steel. The angle iron frame shall use a minimum section of 50x50x4 mm angle. Steel sheets for panels, semigraphic, and accessories shall be cut on a squaring shears to ensure tight flush joint when butted together. Adjacent panels are bolted together with cadmium plated bolts and nuts. Bolts or screws shall not be exposed on the face of the panel. Welded coupling of panel section is not allowed. Adjacent panels shall be assembled with face flush. Gaps or cracks shall not be visible from the front of assembled panels.
ii. Rear of each panel section shall have a steel framework assembled to it for supporting instruments, raceways and other accessories like power distribution boxes etc. Panel stiffeners shall be welded to the rear of the panel and shall not interfere with instrument installation. All structural shapes of steel members shall be as per IS-226 or equivalent standard.
iii. When specified panels/cabinets shall be provided with hinged lift off type doors with gaskets and non lockable flush type door handles. Doors switches operated fluorescent lamps shall be provided for all closed panels/cabinets.
iv. All cable entries to the panels and accessories shall be through single compression type cable glands. Removable gland plates shall be provided at the bottom of all panels and accessories for cable.
v. One telephone socket, and 110 V/ 230 V, 50 Hz plug in outlets shall be provided for every three panel sections.
vi. Control panel shall be totally enclosed cubicle type typically with 2100 mmH x1200 mmW x 800 mmD dimension of each cubicle. Removable hinged doors shall be provided at the rear for

COPYRIGHT AND CONFIDENTIAL
The information on this document is the property of BHARAT HEAVY ELECTRICALS LIMITED .
It must not be used directly or indirectly in any way detrimental to the interest of the company.

COPYRIGHT AND CONFIDENTIAL
The information on this document is the property of BHARAT HEAVY ELECTRICALS LIMITED .
It must not be used directly or indirectly in any way detrimental to the interest of the company.

easy maintenance and accessibility of the instrument. Doors shall be provided with double/single leave as shown in the GA with handle and lock/key arrangement.

vii. Adequate illumination shall be provided inside the panel.

viii. Enclosure protection shall be in accordance with IEC 529;

ix. Anti-vibration pad of suitable material of 15 mm thickness shall be provided between the base channel and the panel frame.

x. Painting: Painting shall be as per Project Specific Requirement or RAL 7035 for ext. and Brillent for Int.

xi. Wires carrying measurement signals associated with thermocouples, resistance temperature detectors (RTDs), pH Instruments and other low level signals shall be routed in separate wire ways and not along with power cables. Power wiring and control wiring should be separated not less than 150 mm. If they have to cross, the crossing should be as close to right angle as possible.

xii. All intrinsically safe wiring shall be routed in separate wire ways, separate from non-intrinsically safe and power wiring.

xiii. Intrinsically safe terminals shall be adequately separated from non-intrinsically safe terminals. The minimum separation shall be 50 mm.

3.4 Programmable logic Controller (PLC) (NOT APPLICABLE FOR NTPC KAYAMKULAM)

i. Package Vendor shall provide the PLC with minimum requirements as per specification / Project Specific.

ii. A PLC shall be configured in redundant mode of operation as a minimum.

iii. PLC shall be a microprocessor-based system, which shall be used to execute process plant control / sequence control / process and safety shutdown / interlock logic of the plant as specified in the job specification.

iv. Other Requirements:

a)	For PLC system	:	1) The field termination assembly for PLC shall be supplied from PLC manufacturer only. 2) On-line replacement without any limitation and restrictions should be possible. For each input/ output module, the system shall support a hot spare module, which can be inserted on-line to facilitate the repair of the faulty module.
b)	Interposing Relays (IPR)	:	1) Fail safe relays with LED indication shall be used for all digital outputs. 2) IPR shall be suitable for usage in SER application of 1msec resolution
c)	Barriers	:	1) Active type barriers shall be used for all intrinsic safe inputs & outputs. 2) Non-intrinsic safe inputs/outputs shall be galvanically / optically isolated from external control circuit by using isolators.
d)	OWS, EWS & SOE PC	:	1) 24” color TFT-LCD table top mounted desktop type monitor with touch screen, key board & mouse 2) All work stations shall be located in local control room. Hence, PLC monitors shall match with DCS monitors. Details of DCS monitors & make shall be intimated during detail engineering. 3) With latest version of PENTIUM with all full facilities & DVD drive 4) To be loaded with necessary software like Windows, MS office & Anti-virus software, etc. 5) To be loaded with License software used in PLC programming & graphic building for each OWS and EWS
e)	Cables & cable termination accessories **(supply by vendor)** [Qty : As required]	:	1) All cables within package shall be vendor scope. 2) Inter equipment cables shall be armored type. 3) All flexible cables & system cable shall be laid through metallic conduits. 4) Cable glands, lugs, ferrules, etc required for termination of

COPYRIGHT AND CONFIDENTIAL
The information on this document is the property of BHARAT HEAVY ELECTRICALS LIMITED .
It must not be used directly or indirectly in any way detrimental to the interest of the company.

			purchaser's cables terminating at PLC panel and for cables supplied by vendor 5) Cable glands shall be SS 304 double compression type with PVC shrouds suitable for armored cables.
f)	MODBUS connectivity	:	1) PLC shall communicate with DCS through RS 485 MODBUS RTU link. 2) Vendor shall be jointly responsible for establishment of MODBUS communication between DCS and PLC by giving all engineering assistance for establishment of communication between the two systems.
g)	Time synchronization	:	PLC and associated work stations time synchronization with master clock [supplied by others] shall be carried out by generating IRIG-B signal. Hence, PLC shall be supplied with necessary hardware and software for time synchronization.
	System loading	:	1) Loading for the controller shall not exceed 60% with installed spares 2) The system memory shall have sufficient capacity for 30% additional application programming & configuration in future.
i)	System redundancy	:	1) Controller – 1:1 2) Input & Output cards – 1:1 3) Communication Bus/cards – 1:1 4) Power supply – 1:1
j)	No. of channels per I/O card	:	Vendor to Specify
k)	I/O count for Main equipment	:	Vendor to Specify
l)	Installed Spares	:	1) For I/O cards : 20% of base quantity 2) For system cards: 20% of total quantity to meet project requirement. 3) Marshalling: 20% [this includes isolators, terminals, cable glands, etc.] 4) Power supply: 30% for each variety [like feeders & other sub-components] All the installed spares shall be supplied with fully wired up.
m)	Quantity of Barriers (for AI & AO)	:	Base quantity + installed spares
n)	Quantity of Inter posing relays (for DO's)	:	Base quantity + installed spares [These shall be suitable for interrogation voltages]
o)	Sequence of Events [SOE]	:	1) SOE shall be Integral to PLC 2) Number of SOE points : Vendor to specify 3) Sequence of event recording facility shall be provided with resolution same as PLC scan time. 4) At least 96 hours history for sequence of events should be available in SOEPC/ loader hard disk. It shall be possible to archive history data in CD/ tape. All necessary hardware and software shall be provided. The printout shall be from printer connected to SOE PC.
p)	Spare space	:	1) I/O level: 20% [Internal wiring up to I/O terminals shall be completed with all necessary hardware. Installation of only I/O cards should make this spare space usable]. 2) Marshalling rack : 20%
q)	Spare in Communication bus	:	The communication sub-system shall have sufficient capability to take care of system expansions as mentioned above without degrading the system performance.
r)	Consumables for 1 year operation	:	Vendor to Specify

COPYRIGHT AND CONFIDENTIAL
The information on this document is the property of BHARAT HEAVY ELECTRICALS LIMITED .
It must not be used directly or indirectly in any way detrimental to the interest of the company.

v. The detailed specification of the Processor shall be as per the job specifications.
vi. The processor shall have capability to implement various control functions including relay logic, timer, counter, numerical calculations, PID control and data processing to implement the plant process control / sequence logic, and / or process and safety shutdown logic.
vii. The processor shall be provided with extensive error checking diagnostic functions such as total checking of memory, battery monitoring, parity checking, reference checking, I/O checking, short / open circuit checking etc.
viii. Each processor shall be provided with separate power supply. Failure of one power supply shall not affect the system operation in case of Hot Back Up system. Whenever TMR system is specified each processor shall preferably be provided with separate power supply.
ix. Each input and output shall be optically isolated from external circuit.
x. Each I/O shall be protected against reversal of polarity of power voltage to the I/O.
xi. Each output shall be short circuit proof and protected by fuse with a visual indication of blown fuse.

4.0 INSTRUMENT ERECTION MATERIAL

The scope of package vendor includes generation of BOQ and supplies all erection hardware required for installation of all instrumentation, which form a part of their package system as per Clause 1.0 Package Scope Matrix.
In addition, others items like cables, cable glands, junction boxes, instrument valves, mounting accessories, cable trays, conduits, identification tags, structural material required for instrument control panel (base frame) supports and trays etc. The erection / installation of instruments will be done as per enclosed standard instrument installation details and guidelines drawings of Purchaser/Customer.

4.1 Cable Glands

i. Vendor shall supply all cable glands required for glanding the above mentioned cables both at field instrument and at local panel devices/junction boxes.
ii. All cable glands shall be made of SS 304 with PVC Shrouds double compression type suitable for armored cables.
iii. Explosion proof glands for Ex-proof Area shall be supplied.
iv. Vendor shall supply a minimum of 20% cable glands as spare.

4.2 Junction boxes

i. Junction Box shall be of die cast aluminium alloy body and shall be weather proof to IP 65 and certified for EEx ‘d’.
ii. These boxes shall have terminals suitable for minimum 2.5sq.mm cable termination mounted on rails. 20% spare terminals shall be supplied in each junction box.
iii. Telephone shoe shall be provided in junction boxes.
iv. Explosion proof junction boxes wherever required shall be supplied.
v. Each junction box shall have minimum of 20% or 2 nos. whichever is more, spare entry point provided with plugs.
vi. These shall have 2 nos. outlets entries for Multi Cable.
vii. All unused Inlets & outlets of the junction boxes shall be provided with SS304 plugs.

4.3 Air Filter Regulators

i. Instrument air filter regulator of suitable sizes shall be supplied for each pneumatic instrument. Connection shall be ¼”, ½” only.
ii. The body of the filter shall be anodized aluminium / polycarbonate glass.
iii. The filter shall have 25 micron sintered bronze/ceramic filter element and shall be provided with manual drain and 2” nominal size pressure gauge.

4.4 Instrument support/structural steel

COPYRIGHT AND CONFIDENTIAL
The information on this document is the property of BHARAT HEAVY ELECTRICALS LIMITED .
It must not be used directly or indirectly in any way detrimental to the interest of the company.

i. Vendor shall supply instrument stands (stanchions) and other structural steel material required for supporting the cable trays, impulse lines and instruments.
ii. Steam tracing shall be through 6mm OD copper tubes of electrolytic grade copper.

4.5 Cable Tray / Duct

i. All cable / tubes shall run on cable trays. Cable Tray Material shall be FRP.
ii. The width shall be so selected that at least 25% of tray space is available for future use of the complete installation.
iii. Suitable cable clamps made of aluminium shall be supplied for binding the cables at every 500mm.
iv. All tubes/cables shall be properly laid on cable trays, which shall be supported at regular intervals.
v. Separate routing or physical separation shall be maintained between signal cables and shut down/power cables.
vi. Wherever intrinsically safe system cabling is employed the minimum separation of 150mm shall be adhered to between IS and Non-IS signal cables.
vii. In case the cables are to be buried or laid in concentrated trench the same shall be carried out by vendor with prior intimation to owner.

5.0 INSTALLATION AND PROCESS CONNECTION

5.1 Instrument Installation

i. Instrument erection shall be carried out as per installation drawing approved by Project Requirement or as per Installation Drawing (ANNEXURE -5).
ii. All direct mounted instruments like thermocouple thermowells, temperature gauges, pressure gauges, pressure switches etc. shall be installed in such a way that they have better readability and accessibility.
iii. All primary piping (impulse lines) shall have a slope of 1:10 on the horizontal run.
iv. All welding shall be carried out as per the relevant code with proper electrodes. Any testing (non-destructive) like DP test on root weld and final weld shall be carried out as applicable. All consumables shall be part of vendor's scope of supply.
v. All threaded joints shall be tightened by Teflon tapes only.
vi. All impulse lines shall be supported at regular intervals with 'U' clamps.
vii. All level gauges/transmitters to be provided with drain connection at ground level.
viii. Steam tracing wherever require shall be carried out by 6mm OD 1mm thick copper tubes, and condensate traps shall be provided to collect all the condensate.
ix. The cases of instruments shall be earthed by earthing wire to the nearest earth bus provided by Purchaser/ Customer for safety reasons.

5.2 Process Connection

Instrument generally is equipped with its own process connection on Pipe and Vessel shall be as per ANNEXURE – 3.

6.0 TESTING AND CALIBRATION

Testing, Calibration and Inspection requirements shall be in general as per Inspection and Testing Table (ANNEXURE-4). In addition, the following shall also be taken care testing at Site / Works.

i. All impulse lines shall be properly flushed after isolating both the instrument and the vessel/piping.
ii. All impulse line shall be tested hydraulically at 1.5 times the maximum operating pressure. Instrument and vessel/piping must be isolated during this test.

COPYRIGHT AND CONFIDENTIAL
The information on this document is the property of BHARAT HEAVY ELECTRICALS LIMITED .
It must not be used directly or indirectly in any way detrimental to the interest of the company.

iii. In case of special conditions where hydro testing is not permitted due to service conditions, the impulse lines testing shall be carried out by using air or nitrogen. (Consumables shall be supplied by vendor.)
iv. All external cage type level instruments shall also be tested up to 1.5 times operating pressure.
v. After pressure testing all these impulse lines shall be drained and dried with dry air to remove any moisture.
vi. Instrument air lines will be service tested only for any leak after pressurizing and isolating the main root valve, by soap solution.
vii. All instrument cables shall be tested for continuity and insulation. While megger is used for insulation testing, ensure that all instruments and zener barriers are isolated at both ends.
viii. All instruments supplied by the vendor shall be calibrated using proper test equipment
ix. All instruments shall be calibrated for 0%, 25%, 50%, 75% and 100% in increasing & decreasing order.
x. All temperature gauges shall be calibrated using temperature baths.
xi. All thermocouples shall be calibrated as per instrument ranges.
xii. All transmitters shall be calibrated as per instrument ranges.
xiii. All displacer type level transmitters shall be calibrated with water or suitable fluids and corrected for specific gravity.
xiv. All alarm and trip switches shall be calibrated over the entire range and finally set and checked for alarm/ trip points and reset points as per the alarm/trip set point schedule. After setting these points shall be sealed.
xv. All control valves prior to stroke checking shall be thoroughly cleaned externally. The full stroke of valve shall be checked for opening and closing. Any adjustments required for obtaining full stroke and reducing hysteresis shall be carried out.
xvi. Bubble tight shut-off control valves and shut down valves shall be checked for seat leak test and gland leak test.
xvii. Solenoid valve shall be checked functionally for its operation.
xviii. Safety relief valves shall be set / tested by using dry air/nitrogen. Leakage (if any) shall be removed by proper lapping of seat and disc.
xix. All field instruments shall be calibrated as per the manufacturer's instruction.
xx. The entire loop shall be checked for proper operation through DCS system after performing the calibration of all instruments.
xxi. The entire PLC system shall be simulated from the process trip switches and the scheme shall be tested for its proper operation, prior to start up of the unit.

7.0 COMMISSIONING

i. This activity shall be carried out in a systematic manner to avoid any accident of operating personnel and damage to plant as per the agreed procedure between Vendor/Purchaser/Customer.
ii. During the plant start up calibration of instruments, controller's alignment and trip point settings shall be trimmed so as to meet the operation requirements.
iii. All instruments have to be recalibrated and the results recorded as required and mutually agreed between vendor/client/BHEL prior to guarantee run of plant.

8.0 SPARES

8.1 Mandatory Spares

Mandatory spares shall be quoted by Package vendor for all instruments as per Vendors Recommendation/project specific requirements.

8.2 Commissioning Spares

Commissioning spares shall be quoted by Package vendor for all instruments as per Vendors Recommendation/project specific requirements.
Package Vendor shall supply the following commissioning spare irrespective of the above,

a) Gauges – 5% or Minimum 1 No. of Each Type
b) Transmitters - 5% or Minimum 1 No. of Each Type

c) Fittings – 5% of Each Type
d) Cable Glands – 5% of Each Type
e) Switches - 5% or Minimum 1 No. of Each Type

8.3 Two years Operational & Maintenance Spares

Two years Operational and Maintenance Spares shall be quoted by Package vendor for all instruments as per Vendors Recommendation/project specific requirements.

9.0 DOCUMENTATION

Sl.No.	Description of documents	Along with bid	After placement of order		Docs. / Drgs. Submission as per Package type
			For approval/ information within six weeks	Final documents before dispatch of consignment.	
1.	Control and Instrumentation Document Schedule	X	Yes (I)	Yes	P1,P2,P3,P4
2.	Instrument Index List	X	Yes (I)	Yes	P1,P2,P3,P4
3.	Deviation if any from the technical specification giving justification for the same.	Yes	X	X	P1,P2,P3,P4
4.	Catalogue /technical literature of instruments and accessories including dimensional drawings, weight, special support etc.	X	Yes	Yes	P1,P2,P3,P4
5.	Data sheet/Instrument specification	X	Yes (A)	Yes	P1,P2,P3,P4
6.	Chemical analysis and material test certificates from recognized/ approved laboratory.	X	X	Yes	P1,P2,P3,P4
7.	Certificate of recognized authority for (a) degree of protection against environment (b) for intrinsic safety/ex-proof certification	Yes	Yes(I)	Yes	P1,P2,P3,P4
8.	Calibration / test certificate	X	X	Yes	P1,P2,P3,P4
9.	Applicable boiler regulation certificate for steam & condensate service	X	X	Yes	P1,P2,P3,P4
10.	Loop drawings and legends	X	Yes (I)	Yes	P3,P4
11.	I/O list		NA	NA	P2
12.	Logic (Interlock) diagram	X	Yes (I)	Yes	P3,P4
13.	Installation Details	X	Yes (I)	Yes	P1,P2,P3,P4
14.	Junction box layout and terminal details	X	Yes (I)	Yes	P2,P3,P4
15.	Cable Tray layout for instruments	X	Yes (I)	Yes	P4
16.	PLC Configuration / Block Diagram	NA	NA	NA	P3,P4
17.	Local Control Room Layout	X	Yes (I)	Yes	P4
18.	Cable Schedule and Interconnection Diagrams	X	Yes (I)	Yes	P1,P2,P3,P4
19.	Junction Box Termination Details	X	Yes (I)	Yes	P1,P2,P3,P4
20.	Panel Wiring Diagram	X	Yes(I)	Yes	P3,P4
21.	Bill of Quantity (Control Systems, Panels)	X	Yes(I)	Yes	P3,P4
22.	Earthing Configuration	X	Yes(I)	Yes	P3,P4
23.	Power Distribution Scheme	X	Yes(I)	Yes	P3,P4
24.	Panel GA Drawings	X	Yes (I)	Yes	P3,P4
25.	Manuals for installation, operation	X	X	Yes	P1,P2,P3,P4

COPYRIGHT AND CONFIDENTIAL
The information on this document is the property of BHARAT HEAVY ELECTRICALS LIMITED .
It must not be used directly or indirectly in any way detrimental to the interest of the company.

	and maintenance				
26.	Instrumentation & control design philosophy	X	Yes (I)	Yes	P1,P2,P3,P4
27.	Quality assurance plan	X	Yes	X	P1,P2,P3,P4
28.	All items in final form (i.e. as built)	X	X	Yes	P1,P2,P3,P4
29.	Sub Vendor List	X	Yes	Yes	P1,P2,P3,P4

Notes: 1. (A) For approval (I) For information

10.0 IDENTIFICATION AND MARKING

Self adhesive tapes or signs are not permissible for permanent marking of any instruments

All instruments shall be having stainless steel tag plate screwed to the instrument case indicating, Make, Model No., Tag No. etc.

Tag plates shall also indicate execution (body and trim sizes, body rating and end connection, trim characteristic, air failure action and spring range, air supply pressure – for control valve, inlet & outlet sizes with ratings, bellows material, designated orifice with area in sq. mm., set pressure for safety/relief valves), details of orifice flange/plate/spacer ring and similarly for all other instrument items whichever is applicable.

Each instrument also has a separate circular tag number plate in stainless steel with engraved tag no. and calibration range and attached securely to the instrument with a soft stainless wire. The size of letters and figures shall be minimum 4 mm and the plate should be 2.5mm diameter with 1-2mm thickness.

All spare parts supplied with the main consignment shall be fitted with identification plate with the following data clearly printed and easily readable.

- Spare parts name/ model nos. as per purchaser's instrument specification sheet.
- Serial no.

11.0 PACKING AND SHIPPING

Each instrument and its accessories wherever applicable shall be suitably packed & protected from damage due to transportation, loading and unloading.

Skid Mount instruments to be mounted at factory for P1, P2, P3 type of packages, except P4 type at site.

Packing for shipping of instruments and its accessories shall be crash proof, weatherproof and road / sea worthy.

Very fragile instrument will be protected, as the case may demand.

Skilled personnel will generally look after shipping formalities.

Transport of materials will be done by firms specialized in this field.

All opening shall be closed/ sealed suitably to prevent entry of external matter during transportation, storage/ handling. Cables and pneumatic entries shall be plugged with the aluminium plugs to prevent moisture entry.

The instrument and accessories along-with spares (for commissioning and 2 years operation/ maintenance) shall be dispatched as a single consignment.

12.0 WARRANTY

Warranty of the Package shall be as mentioned in the Main Specification.

COPYRIGHT AND CONFIDENTIAL
The information on this document is the property of BHARAT HEAVY ELECTRICALS LIMITED .
It must not be used directly or indirectly in any way detrimental to the interest of the company.

13.0 ANNEXURE – 1 (PACKAGE SCOPE PHILOSOPHY)

PACKAGE TYPE - P1

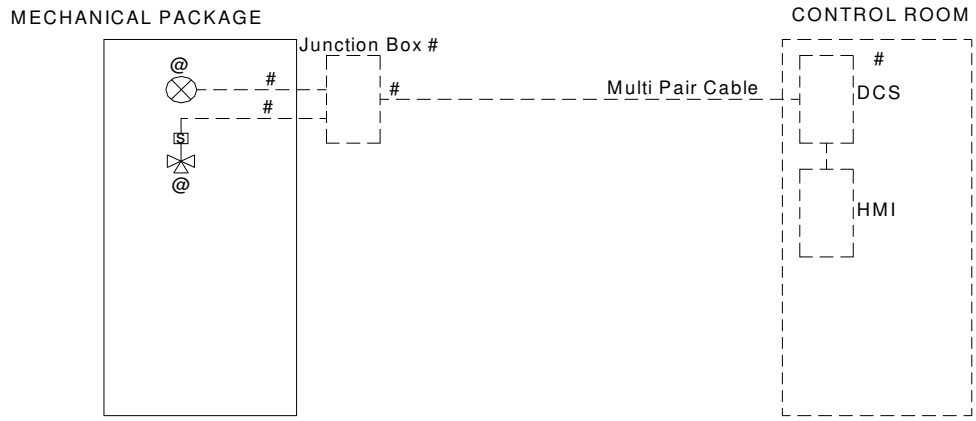

'@' SUPPLY BY PACKAGE VENDOR
'#' SUPPLY BY BHEL

NOTES:

1. THE PACKAGE SHALL BE SUPPLIED WITH FIELD INSTRUMENTS WITHOUT JUNCTION BOX.
2. INSTRUMENT INSTALLATION FOR ALL INSTRUMENTS (PIPE/TUBING/ FITTINGS/ SUPPORTS /CABLE GLANDS ETC..) WITHIN THE PACKAGE SHALL BE BY PACKAGE VENDOR.
3. ALL MONITORING AND CONTROL SIGNALS SHALL BE HARDWIRED FROM JUNCTION BOX TO PLANT DCS SYSTEM BY BHEL.

PACKAGE TYPE - P2

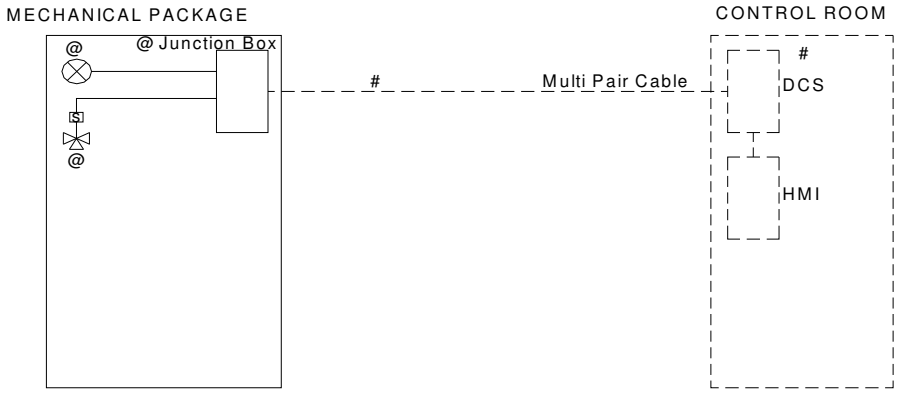

'@' SUPPLY BY PACKAGE VENDOR
'#' SUPPLY BY BHEL

NOTES:

1. THE PACKAGE SHALL BE SUPPLIED WITH FIELD INSTRUMENTS WITH JUNCTION BOX.
2. ALL BRANCH CABLING FROM FIELD INSTRUMENTS TO JUNCTION BOX , INSTRUMENT INSTALLATION FOR ALL INSTRUMENTS (PIPE/TUBING/ FITTINGS/ SUPPORTS/CABLE GLANDS ETC..) WITHIN THE PACKAGE SHALL BE BY PACKAGE VENDOR.
3. ALL MONITORING AND CONTROL SIGNALS SHALL BE HARDWIRED FROM JUNCTION BOX TO PLANT DCS SYSTEM BY BHEL.

COPYRIGHT AND CONFIDENTIAL
The information on this document is the property of BHARAT HEAVY ELECTRICALS LIMITED .
It must not be used directly or indirectly in any way detrimental to the interest of the company.

COPYRIGHT AND CONFIDENTIAL
The information on this document is the property of BHARAT HEAVY ELECTRICALS LIMITED .
It must not be used directly or indirectly in any way detrimental to the interest of the company.

PACKAGE TYPE - P3

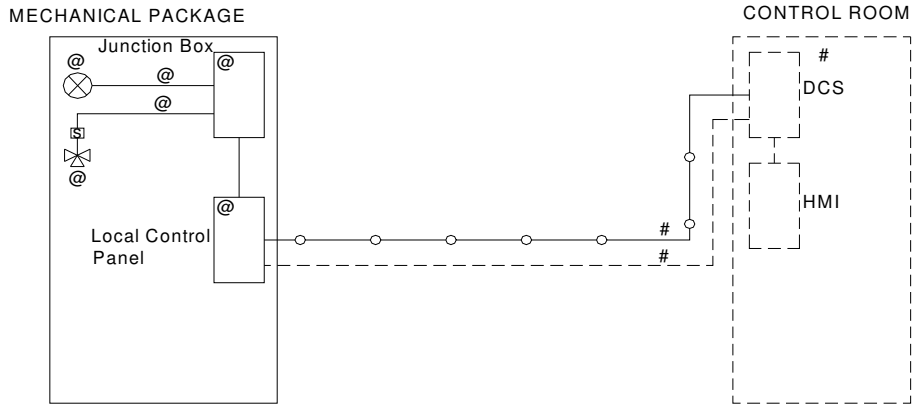

'@' SUPPLY BY PACKAGE VENDOR
'#' SUPPLY BY BHEL

NOTES:

1. THE PACKAGE SHALL BE SUPPLIED WITH FIELD INSTRUMENTS, JUNCTION BOX, AND LOCAL CONTROL PANEL .
2. ALL BRANCH CABLING FROM FIELD INSTRUMENTS TO JB, CABLE FROM JB TO CONTROL PANEL , INSTRUMENT INSTALLATION FOR ALL INSTRUMENTS (PIPE/TUBING/ FITTINGS/ SUPPORTS/CABLE GLANDS ETC..) WITHIN THE PACKAGE SHALL BE BY PACKAGE VENDOR.
3. ALL MONITORING AND CONTROL OF THE PACKAGE SHALL BE BY LOCAL CONTROL PANEL SUPPLIED BY PACKAGE VENDOR.
4. ALL MONITORING OF PACKAGE SIGNALS SHALL BE COMMUNICATED THROUGH SERIAL LINK (MODBUS PROTOCOL), AS WELL AS HARDWIRED FROM LOCAL CONTROL PANEL TO PLANT DCS SYSTEM BY BHEL.

PACKAGE TYPE - P4

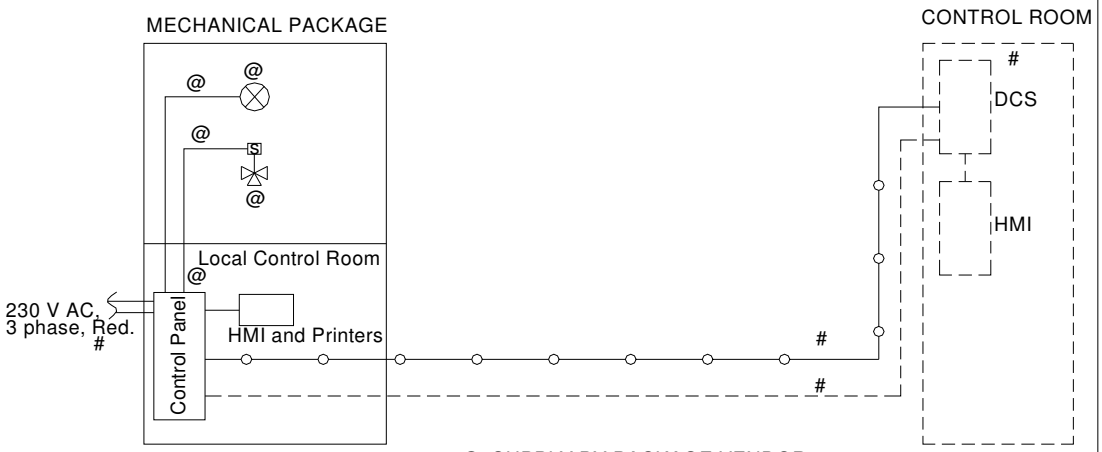

'@' SUPPLY BY PACKAGE VENDOR
'#' SUPPLY BY BHEL

NOTES:

1. THE PACKAGE SHALL BE SUPPLIED WITH FIELD INSTRUMENTS , CONTROL PANEL (PLC BASED), HMI AND PRINTERS AS PER PROJECT REQUIREMENT.
2. ALL BRANCH CABLING FROM FIELD INSTRUMENTS TO CONTROL PANEL , INSTRUMENT INSTALLATION FOR ALL INSTRUMENTS (PIPE/TUBING/ FITTINGS/ SUPPORTS/CABLE ETC..) WITHIN THE PACKAGE SHALL BE BY PACKAGE VENDOR.
3. ALL MONITORING AND CONTROL OF THE PACKAGE SHALL BE BY LOCAL CONTROL PANEL SUPPLIED BY PACKAGE VENDOR.
4. ALL MONITORING OF PACKAGE SIGNALS SHALL BE COMMUNICATED THROUGH SERIAL LINK (MODBUS PROTOCOL) FROM LOCAL CONTROL PANEL TO PLANT DCS SYSTEM BY BHEL.
5. CRITICAL SIGNALS AND ALARMS SHALL BE HARDWIRED TO PLANT DCS AND THE SAME SHALL BE FINALIZED DURING DETAIL ENGINEERING.

COPYRIGHT AND CONFIDENTIAL
The information on this document is the property of BHARAT HEAVY ELECTRICALS LIMITED .
It must not be used directly or indirectly in any way detrimental to the interest of the company.

14.0 ANNEXURE-2 (INSTRUMENT DATASHEETS)

INDEX

1. Pressure Transmitter
2. Diff. Pressure Transmitter
3. Pressure Transmitter – Remote Seal
4. Diff. Pressure Transmitter – Remote seal
5. Pressure Gauge (up to 60 Deg. C)
6. Diff. Pressure Gauge
7. Temperature Gauge (Bimetallic Type)
8. Temperature Element (RTD)
9. Temperature Element (Thermocouple – K type)
10. Temperature Transmitter
11. Level Transmitter (DP type) – Remote Seal
12. Level Transmitter (Non-contact Radar)
13. Rotameter
14. Switches (Pressure & Diff. pressure)
15. Level Gauge – Transparent
16. Level Switch
17. Signal Cables
18. Control Cables
19. Thermocouple Cables K Type

HYDERABAD	PRODUCT STANDARD PROJECT ENGINEERING & SYSTEMS DIVISION HYDERABAD	Doc No: PEIC - 04202 REV. 00 Data sheet No:PT-DS-01

Pressure Transmitter (PT) Technical Data Sheet

GENERAL	1	Range & Qty.	As per skids
	2	Type	Electronic Smart (2 wire), HART, Intrinsic safe
	3	Principle of Sensor	Vendor Std.,
	4	Ambient Temp Limit	- 40 to 80°C
	5	Process Temp. Limit	- 40 to 120°C
SENSOR	6	Accuracy	For a rangeability of 1:10 a) Equal or Above 760 mmWC: ± 0.075 % b) Less than 760 mmWC: ± 0.15 %
	7	Response Time	a) If range ≥ 760mmWC, res. time ≤ 130msec. b) If range < 760mmWC, res. time ≤ 1 sec.
	8	Stability	±0.15 % for 2 year
TRANSMITTER	9	Turn Down Ratio	100:1, 10:1 (if pressure< 100mmWC)
	10	Process Connection	1/2" NPT (F)
	11	Electrical Connection	2 Nos of 1/2" NPT (F)
	12	Power Supply	24V DC, Loop Powered
	13	Over Range Protection	> 130% of range.
	14	Protection	IP 65
	15	Zero & Span adjustment	Required.
	16	Display	Integral LCD Digital (in Engg Units & in %).
	17	Impulse Entry	Side Only
	18	Load Resistance	600Ω @ 24 VDC
	19	Output	4-20mA + HART
	20	Diagnostic Features	Required.
MATERIAL	21	Hazardous area class	Zone-1, IIA/IIB, T3.
	22	Body	SS316
	23	Element	SS316
	24	Sensor O-Ring	Glass-filled PTFE/Teflon
	25	Electronic Housing	SS304 min.
	26	Sensor fill fluid	Silicon Oil
	27	Humidity	0 - 100% RH

ACCESSORIES	28	Mounting Bracket	For 2" pipe mounting, SS304
	29	U Clamp+Fastner	Reqd, SS 304
	30	Cable Glands	SS Double Compression+Flameproof
	31	Cable entry Plugs	Reqd, SS 304
	32	Vent/Drain Plugs	Reqd, SS 304
	33	Tag Plate	Reqd, SS 304
	34	Bolts + Nuts	Reqd. A193GrB7 + A194Gr2H
	35	Sensor O-Ring	Extra 2 no. spares req.
TEST REPORT/CERTIFICATE	36	5-Point Calibration	100% Review
	37	Hydro test	100% Review
	38	Material compliance	100% Review
	39	Functional Test	100% Review
	40	Performance Test	100% Review
	41	Ingress Prot. Test	100% Review
	42	Intrinsic Safety Test	100% Review
	43	Conformity Test	100% Review
	44	Internal tests (like IR etc.)	100% Review
PROJECT SPECIFIC	45	Certification	PESO
	46	Compartments	Dual
	47	Manifold Type	Non-Coplanner, Inegral 2 Way, SS
	48	Statutory Approvals	For Transmitters+Glands+Plugs
	49	Sensor Type	Non-Inductive type.
	50	Corrosive Protection	Required
	51	Terminal Block type	Integral, Non-fly leads

HYDERABAD	PRODUCT STANDARD PROJECT ENGINEERING & SYSTEMS DIVISION HYDERABAD	Doc No: PEIC - 04202 REV. 00 Data sheet No:PTD-DS-01

Diaphragm seal - Pressure Transmitter (PTD) Technical Data Sheet

GENERAL	1	Range & Qty.	As per skids
	2	Type	Electronic Smart (2 wire), HART, Intrinsic safe
	3	Principle of Sensor	Vendor Std.,
	4	Ambient Temp Limit	- 40 to 80°C
	5	Process Temp. Limit	- 40 to 120°C
SENSOR	6	Accuracy	For a rangeability of 1:10 a) Equal or Above 500 mmWC: ±0.25 % b) Less than 500 mmWC: ±0.5 %
	7	Response Time	3 sec or better.
	8	Stability	±0.15 % for 2 year
TRANSMITTER	9	Turn Down Ratio	100:1
	10	Process Connection	Raise flanged, 1½" , class 300
	11	Instrument Connection	1/2" NPT (F)
	12	Electrical Connection	2 Nos of 1/2" NPT (F)
	13	Power Supply	24V DC, Loop Powered
	14	Over Range Protection	> 130% of range.
	15	Protection	IP 65
	16	Zero & Span adjustment	Required.
	17	Display	Integral LCD Digital (in Engg Units & in %)
	18	Impulse Entry	Side Only
	19	Load Resistance	600Ω @ 24 VDC
	20	Output	4-20mA + HART
	22	Diagnostic Features	Required.
MATERIAL	23	Hazardous area class	Zone-1, IIA/IIB, T3.
	24	Body	SS316
	25	Element	SS316
	26	Sensor O-Ring	Glass-filled PTFE/Teflon
	27	Electronic Housing	SS304 min.
	28	Sensor fill fluid	Silicon Oil
	29	Humidity	0 - 100% RH

ACCESSORIES	30	Mounting Bracket	For 2" pipe mounting, SS304
	31	U Clamp+Fastner	Reqd, SS 304
	32	Cable Glands	SS Double Compression+Flameproof
	33	Cable entry Plugs	Reqd, SS 304
	34	Vent/Drain Plugs	Reqd, SS 304
	35	Tag Plate	Reqd, SS 304
	36	Spacer Ring & plug	Required, SS
	37	Diaphragm Assembly	SS316L, Flush flange type (Refer fig.1)
	38	Armoured Capillary	Reqd. 3 Mts, SS316L with PVC Coat
	39	Stud Nuts+Bolts	Reqd. A194Gr2H+A193GrB7 (Min 120mm long)
	40	Sensor O-Ring	Extra 2 no. spares req.
	41	Gasket	Reqd. Spriral Wound, SS
TEST REPORT/CERTIFICATE	42	5-Point Calibration	100% Review
	43	Hydro test	100% Review
	44	Material compliance	100% Review
	45	Functional Test	100% Review
	46	Performance Test	100% Review
	47	Ingress Prot. Test	100% Review
	48	Intrinsic Safety Test	100% Review
	49	Conformity Test	100% Review
	50	Internal tests (like IR etc.)	100% Review
PROJECT SPECIFIC	51	Certification	PESO
	52	Compartments	Dual
	53	Manifold Type	Non-Coplanner, Inegral 2 Way, SS
	54	Statutory Approvals	For Transmitters+Glands+Plugs
	55	Sensor Type	Non-Inductive type.
	56	Corrosive Protection	Reqd.
	56	Terminal Block type	Integral, Non-fly leads

Typical Spacer Ring assembly Dwg.

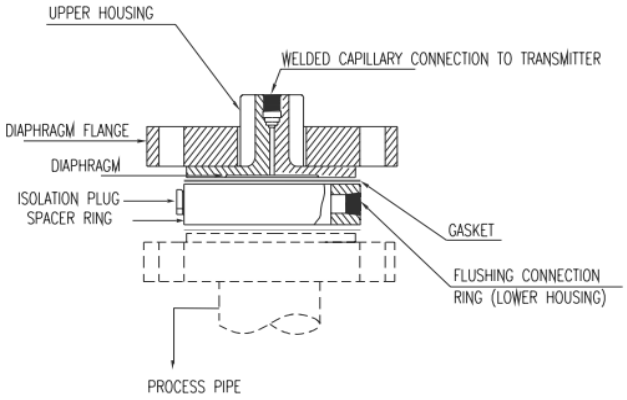

FIGURE - I

HYDERABAD	PRODUCT STANDARD PROJECT ENGINEERING & SYSTEMS DIVISION HYDERABAD	Doc No: PEIC - 04202 REV. 00 Data sheet No:DPT-DS-01

Differential Pressure Transmitter (DPT) Technical Data Sheet

GENERAL	1	Range & Qty.	As per skids	ACCESSORIES	28	Mounting Bracket	For 2" pipe mounting, SS304
	2	Type	Electronic Smart, HART, Intrinsic safe		29	U Clamp+Fastner	Reqd, SS 304
	3	Principle of Sensor	Vendor Std.,		30	Cable Glands	SS Double Compression+Flameproof
	4	Ambient Temp Limit	- 40 to 80°C		31	Cable entry Plugs	Reqd, SS 304
	5	Process Temp. Limit	- 40 to 120°C		32	Vent/Drain Plugs	Reqd, SS 304
SENSOR	6	Accuracy	For a rangeability of 1:10 a) Equal or Above 760 mmWC: ± 0.075 % b) Less than 760 mmWC: ± 0.15 %		33	Tag Plate	Reqd, SS 304
					34	Bolts + Nuts	Reqd. A193GrB7 + A194Gr2H
					35	Sensor O-Ring	Extra 2 no. spares req.
	7	Response Time	a) If range ≥ 760mmWC, res. time ≤ 130msec. b) If range < 760mmWC, res. time ≤ 1 sec.				
	8	Stability	±0.15 % for 2 year				
TRANSMITTER	9	Turn Down Ratio	100:1, 10:1 (if pressure< 100mmWC)	TEST REPORT/CERTIFICATE	36	5-Point Calibration	100% Review
	10	Process Connection	1/2" NPT (F)		37	Hydro test	100% Review
	11	Electrical Connection	2 Nos of 1/2" NPT (F)		38	Material compliance	100% Review
	12	Power Supply	24V DC, Loop Powered		39	Functional Test	100% Review
	13	Over Range Protection	> 130% of range.		40	Performance Test	100% Review
	14	Protection	IP 65		41	Ingress Prot. Test	100% Review
	15	Zero & Span adjustment	Required.		42	Intrinsic Safety Test	100% Review
	16	Display	Integral LCD Digital (in Engg Units & in %).		43	Conformity Test	100% Review
	17	Impulse Entry	Side Only		44	Internal tests (like IR e	100% Review
	18	Load Resistance	600Ω @ 24 VDC				
	19	Output	4-20mA + HART				
	20	Diagnostic Features	Required.				
MATERIAL	21	Hazardous area class	Zone-1, IIA/IIB, T3.	PROJECT SPECIFIC	45	Certification	PESO
	22	Body	SS316		46	Compartments	Dual
	23	Element	SS316		47	Manifold Type	Non-Coplanner, Inegral 3 Way, SS
	24	Sensor O-Ring	Glass-filled PTFE/Teflon		48	Statutory Approvals	For Transmitters+Glands+Plugs
	25	Electronic Housing	SS304 min.		49	Sensor Type	Non-Inductive type.
	26	Sensor fill fluid	Silicon Oil		50	Corrosive Protection	Reqd.
	27	Humidity	0 - 100% RH		51	Terminal Block type	Integral, Non-fly leads

NOTES:

1 All integral parts of the transmitter shall be suitable for the differential over-range in either direction equal to the full rated pressure of the body with the opposite side vented to atmosphere without permanent distortion or calibration error. For vacuum service, the element shall have under-range protection to full vacuum.

2 The square root extraction for the differential pressure based flow measurement shall be carried out in DCS. Transmitter shall indicate both DP & flow values.

HYDERABAD	PRODUCT STANDARD PROJECT ENGINEERING & SYSTEMS DIVISION HYDERABAD	Doc No: PEIC - 04202 REV. 00 Data sheet No:DPTD-DS-01

Diaphragm seal - Differential Pressure Transmitter (DPTD) Technical Data Sheet

GENERAL	1	Range & Qty.	As per skids	ACCESSORIES	30	Mounting Bracket	For 2" pipe mounting, SS304
	2	Type	Electronic Smart (2 wire), HART, Intrinsic safe		31	U Clamp+Fastner	Reqd, SS 304
	3	Principle of Sensor	Vendor Std.,		32	Cable Glands	SS Double Compression+Flameproof
	4	Ambient Temp Limit	- 40 to 80°C		33	Cable entry Plugs	Reqd, SS 304
	5	Process Temp. Limit	- 40 to 120°C		34	Vent/Drain Plugs	Reqd, SS 304
SENSOR	6	Accuracy	For a rangeability of 1:10 a) Equal or Above 500 mmWC: ±0.25 % b) Less than 500 mmWC: ±0.5 %		35	Tag Plate	Reqd, SS 304
					36	Spacer Ring & plug	Required, SS
					37	Diaphragm Assembly	SS316L, Flush flange type (Refer fig.1)
	7	Response Time	3 sec or better.		38	Armoured Capillary	Reqd. 3 Mts, SS316L with PVC Coat
	8	Stability	±0.15 % for 2 year		39	Stud Nuts+Bolts	Reqd. A194Gr2H+A193GrB7 (Min 120mm long)
					40	Sensor O-Ring	Extra 2 no. spares req.
					41	Gasket	Reqd. Spriral Wound, SS
TRANSMITTER	9	Turn Down Ratio	100:1	TEST REPORT/CERTIFICATE	42	5-Point Calibration	100% Review
	10	Process Connection	Raise flanged, 3" , class 300		43	Hydro test	100% Review
	11	Instrument Connection	1/2" NPT (F)		44	Material compliance	100% Review
	12	Electrical Connection	2 Nos of 1/2" NPT (F)		45	Functional Test	100% Review
	13	Power Supply	24V DC, Loop Powered		46	Performance Test	100% Review
	14	Over Range Protection	> 130% of range.		47	Ingress Prot. Test	100% Review
	15	Protection	IP 65		48	Intrinsic Safety Test	100% Review
	16	Zero & Span adjustment	Required.		49	Conformity Test	100% Review
	17	Display	Integral LCD Digital (in Engg Units & in %).		50	Internal tests (like IR etc.)	100% Review
	18	Impulse Entry	Side Only				
	19	Load Resistance	600Ω @ 24 VDC				
	20	Output	4-20mA + HART				
	21	Diagnostic Features	Required.				
	22	Remote Seal Assembly	Diaphragm on HP side & capillary on LP side				
MATERIAL	23	Hazardous area class	Zone-1, IIA/IIB, T3.	PROJECT SPECIFIC	51	Certification	PESO
	24	Body	SS316		52	Compartments	Dual
	25	Element	SS316		53	Manifold Type	Non-Coplanner, Inegral 3 Way, SS
	26	Sensor O-Ring	Glass-filled PTFE/Teflon		54	Statutory Approvals	For Transmitters+Glands+Plugs
	27	Electronic Housing	SS304 min.		55	Sensor Type	Non-Inductive type.
	28	Sensor fill fluid	Silicon Oil		56	Corrosive Protection	Reqd.
	29	Humidity	0 - 100% RH		57	Terminal Block type	Integral, Non-fly leads

NOTES:

1 All integral parts of the transmitter shall be suitable for the differential over-range in either direction equal to the full rated pressure of the body with the opposite side vented to atmosphere without permanent distortion or calibration error. For vacuum service, the element shall have under-range protection to full vacuum.

2 The square root extraction for the differential pressure based flow measurement shall be carried out in DCS. Transmitter shall indicate both DP & flow values.

Typical Spacer Ring assembly Dwg.

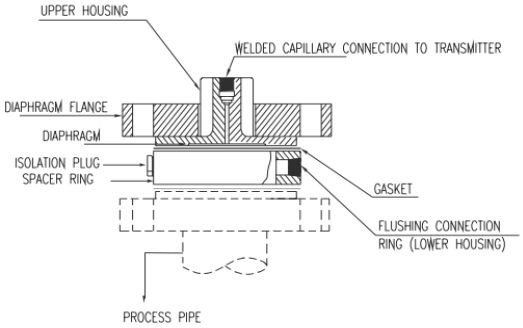

FIGURE - 1

HYDERABAD	PRODUCT STANDARD PROJECT ENGINEERING & SYSTEMS DIVISION HYDERABAD	Doc No: PEIC - 04202 REV. 00 Data sheet No:TT-DS-01

Temperature Transmitter (TT) Technical Data Sheet

GENERAL	1	Range & Qty.	As per skids	MATERIAL	22	Hazardous area class	Zone-1, IIA/IIB, T3.
	2	Type	Field mounted, Electronic Smart, HART, Intrinsic safe		23	Body	SS316
	3	Ambient Temp Limit	- 40 to 75°C		24	Humidity	0 - 100% RH
					25	Electronic Housing	SS304 min.
TRANSMITTER	4	Input	3 wire RTD/Thermocouple (k-type) with dual i/p provision	ACCESSORIES	26	Mounting Bracket	For 2" pipe mounting, SS304
	5	Dual sensor inputs	Bumpless automatic switchover		27	U Clamp+Fastner	Reqd, SS 304
	6	Accuracy	a) >350°C : ±0.25 % of range b) 150°C to 350°C : ±0.5 % of range c) b) Below 150°C : ±0.75 % of range		28	Cable Glands	SS Double Compression+Flameproof
					29	Cable entry Plugs	Reqd, SS 304
					30	Tag Plate	Reqd, SS 304
	7	Updated Time	500msec.		31	Bolts + Nuts	Reqd. A193GrB7 + A194Gr2H
	8	Cold Junction Compensation	Required (automatic for thermocouple sensors).	TEST REPORT/CERTIFICATI	32	5-Point Calibration	100% Review
	9	Burnout protection	Required and selectable UP scale / DOWN scale		33	Material compliance	100% Review
	10	Process Connection	1/2" NPT (F)		34	Functional Test	100% Review
	11	Electrical Connection	2 Nos of 1/2" NPT (F)		35	Performance Test	100% Review
	12	Power Supply	24V DC, Loop Powered		36	Ingress Prot. Test	100% Review
	13	Configuration	By Hand Held Calibrator.		37	Intrinsic Safety Test	100% Review
	14	Surge & Lightening Protection	In built		38	Conformity Test	100% Review
	15	Protection	IP 65		39	Update time test	100% Review
	16	Impulse Entry	Side Only				
	17	Display	Integral LCD Digital (in Engg Units & in %).	PROJECT SPECIFIC	40	Certification	PESO
	18	Damping	0-32 Sec Adjustable		41	Compartments	Dual
	19	Load Resistance	600Ω @ 24 VDC		42	Statutory Approvals	For Transmitters+Glands+Plugs
	20	Output	4-20mA+HART, Linearised.		43	Corrosive Protection	Reqd.
	21	Diagnostic Features	Required.		44	Terminal Block type	Integral, Non-fly leads

HYDERABAD	PRODUCT STANDARD PROJECT ENGINEERING & SYSTEMS DIVISION HYDERABAD	Doc No: PEIC - 04202 REV. 00 Data sheet No:LT(G-R)-DS-01

Radar (Guided Wave Type) Level Transmitter (LT) Technical Data Sheet

GENERAL	1	Range & Qty.	As per skids
	2	Transmitter Type	Guided wave, Electronic Smart, HART, Ex-proof
	3	Principle of Sensor	Vendor Std.(Pulse/Freq)
	4	Ambient Temp Limit	- 40 to 80°C
	5	Measuring Media	As per skids
SENSOR	6	Type of Detector	Vendor to select.
	7	Max Press / Temp	3 Kg/cm2(g) / 65 ^{O}C
TRANSMITTER	8	Accuracy	± 3mm OR better
	9	Process Connection	2", 300# RF
	10	Electrical Connection	2 Nos of 1/2" NPT (F)
	11	Power Supply	24V DC, Loop Powered, 2 wire
	12	Mounting	On closed chamber
	13	Protection	IP 65
	14	Lighting and surge Protection	Required
	15	Display	Integral LCD Digital (in Engg Units & in %)
	16	Load Resistance	600Ω @ 24 VDC
	17	Output	4-20mA + HART
	18	Diagnostic Features	Required
MATERIAL	19	Hazardous area class	Zone-1, IIA/IIB, T3.
	20	Sensor Body	SS316
	21	chamber body	same as tank material
	22	Humidity	0 - 100% RH
	23	Sensor O-Ring	Glass-filled PTFE/Teflon
	24	Electronic Housing	SS304 min.
	25	Flange	SS

ACCESSORIES	26	Mounting Bracket	For 2" pipe mounting, SS304
	27	U Clamp+Fastner	Reqd, SS 304
	28	Cable Glands	SS Double Compression+Flameproof
	29	Cable entry Plugs	Reqd, SS 304
	30	Tag Plate	Reqd, SS 304
	31	Bolts + Nuts	Reqd. A193GrB7 + A194Gr2H
	32	Gasket	SS 316, Spiral wound type.
TEST REPORT/CERTIFICATE	33	5-Point Calibration	100% Review
	34	Material compliance	100% Review
	35	Functional Test	100% Review
	36	Performance Test	100% Review
	37	Ingress Prot. Test	100% Review
	38	Intrinsic Safety Test	100% Review
	39	Conformity Test	100% Review
PROJECT SPECIFIC	40	Certification	PESO
	41	Compartments	Dual
	42	StatutoryApprovals	For Transmitters+Glands+Plugs
	43	Corrosive Protection	Required

HYDERABAD	PRODUCT STANDARD PROJECT ENGINEERING & SYSTEMS DIVISION HYDERABAD	Doc No: PEIC - 04202 REV. 00 Data sheet No:LT(NC-R)-DS-01

Radar (Non-Contact Type) Level Transmitter (LT) Technical Data Sheet

GENERAL	1	Range & Qty.	As per skids
	2	Transmitter Type	Non-contact, Electronic Smart, HART, Explosion proof
	3	Principle of Sensor	Vendor Std.(Pulse/Freq)
	4	Ambient Temp Limit	- 40 to 80°C
	5	Measuring Media	As per skids
ANTENNA	6	Type of Detector	Vendor to select.
	7	Max Press / Temp	3 Kg/cm2(g) / 65 ^{O}C
TRANSMITTER	8	Accuracy	± 3mm OR better
	9	Process Connection	3", 150#.
	10	Electrical Connection	2 Nos of 1/2" NPT (F)
	11	Power Supply	24V DC, Loop Powered, 2 wire
	12	Mounting	Top of Fix Tank (Pit)
	13	Protection	IP 65
	14	Lighting and surge Protection	Required
	15	Display	Integral LCD Digital (in Engg Units & in %)
	16	Load Resistance	600Ω @ 24 VDC
	17	Output	4-20mA + HART
	18	Diagnostic Features	Required
MATERIAL	19	Hazardous area class	Zone-1, IIA/IIB, T3.
	20	Body	SS316
	21	Antenna	SS316
	22	Humidity	0 - 100% RH
	23	Sensor O-Ring	Glass-filled PTFE/Teflon
	24	Electronic Housing	SS304 min.
	25	Flange	SS

ACCESSORIES	26	Mounting Bracket	For 2" pipe mounting, SS304
	27	U Clamp+Fastner	Reqd, SS 304
	28	Cable Glands	SS Double Compression+Flameproof
	29	Cable entry Plugs	Reqd, SS 304
	30	Tag Plate	Reqd, SS 304
	31	Bolts + Nuts	Reqd. A193GrB7 + A194Gr2H
	32	Gasket	SS 316, Spiral wound type.
TEST REPORT/CERTIFICATE	33	5-Point Calibration	100% Review
	34	Material compliance	100% Review
	35	Functional Test	100% Review
	36	Performance Test	100% Review
	37	Ingress Prot. Test	100% Review
	38	Intrinsic Safety Test	100% Review
	39	Conformity Test	100% Review
PROJECT SPECIFIC	40	Certification	PESO
	41	Compartments	Dual
	42	StatutoryApprovals	For Transmitters+Glands+Plugs
	43	Corrosive Protection	Required

HYDERABAD	PRODUCT STANDARD PROJECT ENGINEERING & SYSTEMS DIVISION HYDERABAD	Doc No: PEIC - 04202 REV. 00 Data sheet No:PG-DS-01

Pressure Gauge (PG) Technical Data Sheet

GENERAL	1	Range & Qty.	As per skids	MATERIAL	20	Hazardous area class	Zone-1, IIA/IIB, T3.
	2	Type	Surface mount /Local Gauge		21	Case Material	SS304
	3	Ambient Temp Limit	0 to 65°C		22	Element Material	SS316
					23	Window Glass	Shatter Proof.
GAUGE SPECIFICATION	4	Sensor Type	Bourdon Tube		24	Pointer	Alluminium.
	5	Dial Size	150MM (6")		25	Blow out Disc	SS 304
	6	Accuracy	±1% of full scale deflection		26	Tag Plate	Reqd, SS 304
	7	Process Connection	1/2" NPT (M), Bottom entry.		27	Bezel ring	SS 304
	8	Blow out Disc	Required.		28	Movement	SS 304
	9	Solid Front Case	Required for >100Kg/Cm2.		29	Socket Material	SS 304
	10	Over Range Protection	> 130% of full scale.	CERTIFICATE	30	Calibration	100% Review
	11	Protection	IP 65		31	Vibration test	100% Review
	12	Zero & Span adjustment	External Required.		32	Material compliance	100% Review
	13	Anti-corrossive Dial	Non-Rusting Plastic, White with black figure		33	Ingress prot. Test	100% Review
	14	Micro meter Adjustment	Required for pointers.				
	15	Scale type	Concentric, Graduated units	TEST	34	Calibration	10% or min. 2 of each range
	16	Pointer-270° Deflection	Yes, Metal with Black Finish		35	Over Protection Test for 30 min.	10% or min. 2 of each range
	17	Pointer Stop	Required at both end				
	18	Bezel ring	Bayonet Lock Type		36	Accuracy Test	10% or min. 2 of each range
	19	Movement	Geared / Cam-roller type				

NOTES:

1 The elastic element material shall be as follows:

a) For range ≤ 60 Kg/cm2 - AISI-316 seamless drawn stainless steel tube, argon arc welded at AISI-316 forged or wrought stain less steel tube anchorage and tube end piece.

b) For range > 60 Kg/cm2 - AISI-316 bored stainless steel.

HYDERABAD	PRODUCT STANDARD PROJECT ENGINEERING & SYSTEMS DIVISION HYDERABAD	Doc No: PEIC - 04202 REV. 00 Data sheet No:PGD-DS-01

Diaphragm Seal - Pressure Gauge (PGD) Technical Data Sheet

GENERAL	1	Range & Qty.	As per skids	MATERIAL	26	Hazardous area class	Zone-1, IIA/IIB, T3.
	2	Type / Std	Diaphragm Sealed / IS3624		27	Case	SS304
	3	Ambient Temp Limit	0 to 65°C		28	Element	SS316
					29	Window Glass	Shatter Proof.
GAUGE SPECIFICATION	4	Sensing Element	Diaphragm		30	Pointer	Alluminium
	5	Dial Size	150MM (6")		31	Blow out Disc	SS 304
	6	Accuracy	±1% of full scale deflection		32	Bezel Ring	SS 304
	7	Process Connection	1.5" RFLGD, Min 300#.		33	Capillary fill fluid	Silicon Oil
	8	Instrument connection	1/2" NPT(M)		34	Movement	SS 304
	9	Blow out Disc	Required.		35	Socket	SS 304
	10	Over Range Protection	> 130% of full scale.	CERTIFICATE	36	Calibration	100% Review
	11	Protection	IP 65		37	Vibration test	100% Review
	12	Zero & Span adjustment	External Required.		38	Material compliance	100% Review
	13	Anti-corrossive Dial	Non-Rusting Plastic, White with black figure		39	Ingress prot. Test	100% Review
	14	Micro meter Adjustment	Required for pointers.				
	15	Scale type	Concentric, Graduated units				
	16	Pointer-270° Deflection	Yes,Metal with Black Finish				
	17	Pointer Stop	Required at both end				
	18	Bezel ring	Bayonet Lock Type				
	19	Movement	Geared / Cam-roller type				
ACCESSORIES	20	Tag Plate	Reqduired, SS304	TEST	39	Calibration	10% or min. 2 of each range
	21	Spacer Ring	Required, SS		40	Over Protection Test for 30 min.	10% or min. 2 of each range
	22	Vent+Drain plugs	Required, SS, In built to Spacer				
	23	Armoured Capillary	Reqd. 3 Mts, SS316L with PVC Coat		41	Accuracy Test	10% or min. 2 of each range
	24	Stud Nuts+Bolts	Reqd. A194Gr2H+A193GrB7 (Min 120mm long)				
	25	Gasket	Reqd. Spriral Wound, SS				

NOTES:

1 The elastic element material shall be as follows:

a) For range ≤ 60 Kg/cm2 - AISI-316 seamless drawn stainless steel tube, argon arc welded at AISI-316 forged or wrought stain less steel tube anchorage and tube end piece.

b) For range > 60 Kg/cm2 - AISI-316 bored stainless steel.

HYDERABAD	PRODUCT STANDARD PROJECT ENGINEERING & SYSTEMS DIVISION HYDERABAD	Doc No: PEIC - 04202 REV. 00 Data sheet No:JB-DS-01

Junction Box (JB) Technical Data Sheet

GENERAL	1	Range & Qty.	As per skids	ACCESSORIES	19	Cable Glands	SS Double Compression+Flameproof
	2	Type	60 Way, Explosion proof		20	Cable entry Plugs	All cable entry with SS 304
	3	Ambient Temp Limit	- 40 to 80°C		21	Tag Plate	Reqd, SS 304
					22	Gasket	SS 316, Spiral wound type.
JB SPECIFICATION	4	Ingress Protection	IP65		23	Screws/Hinges	SS
	5	Fixing type	External Wall mount		24	Earthing Screws	Internal and external 1 no each with washers
	6	Door type	Bolted				
	7	Telephone Socket	Required.				
	8	Protection	IP-65	TEST	25	Dimensional Check	10% or min. 2 of each type
	9	Inlet Cable entries	1/2" NPT - 6 Nos at Right Side		26	Inlet & outlet entries size	10% or min. 2 of each type
			1/2" NPT - 6 Nos at Left Side		27	Tag Plate Marking	10% or min. 2 of each type
	10	Outlet Cable entries	1½" NPT x 2 nos at bottom side				
	11	Internal Dimensions	375 x 375 x 200 MM (±10%)	CERTIFICATE	28	Material compliance	100% Review
	12	Outer Dimensions	400 x 400 x 256 MM (±10%)		29	PESO certificate	100% Review
	13	Terminal size	2.5 Sq.mm, Clip on screw less, 2 Rows				
	14	Terminal type	DIN Rail Mount,Stack Type,				
	15		Non Double decker.				
	16	Terminal make	Elmex/Connectwell/Phonix/Wago				
	17	Hazardous area class	Zone-1, IIA/IIB, T3.				
	18	Body Material	Die Cast Alluminium, LM-6				

HYDERABAD	PRODUCT STANDARD PROJECT ENGINEERING & SYSTEMS DIVISION HYDERABAD	Doc No: PEIC - 04202 REV. 00 Data sheet No:T/C-DS-01

Thermocouple (T/C) With ThermoWell (TW) Technical Data Sheet

GENERAL	1	Range & Qty.	As per skids
	2	Type	K-Type, Thermocouple
ELEMENT SPECIFICATION	3	Sensor Type	Duplex, Insulated,filled with MgO
	4	Leads	Hermitically sealed
	5	Accuracy	ClassA/Class1 as per IEC751 / 584-2
	6	Instrument connection	1/2" NPT(M)
	7	Head Type/Connection	Screwed / 1/2" NPT (F)
	8	Protection	IP 65
	9	Sensor Wire Size	20 AWG
	10	Element outer dia	Suitable to fit in TW without Air gap
	11	Element Length	Suitable to reach at bottom of TW
	12	Hot Junction	Grounded
	13	Terminal Block	Screw Type
	14	Electrical Connection	2 Nos of 1/2" NPT (F)
	15	Immersion Adjustment	Required, 100mm to 300mm
	16	Thermoelectric properties	as per ANSI MC 96.1
ACCESSORIES	17	Adjustable, 3-piece union	Required for 150 MM.
	18	Cable Glands	SS Double Compression+FlameProof
	19	Cable entry Plugs	Reqd, SS 304
	20	Cap Chain	Reqd, SS 304
MATERIAL	21	Hazardous area class	Zone-1, IIA/IIB, T3.
	22	Case	SS304
	23	Sheath	SS316
	24	Head	SS304
	25	Terminal Block	Heat Resist Ceramic
	26	Tag Plate	SS

THERMOWELL	27	TW Const.	Drilled Bar Stock, SS 316 / 446
	28	Insertion length "U"	Refer BOM (Annexure-I & II)
	29	Dimension	As per below drawing
	30	Process Conn.	1.5" RF
	31	Flange rating & material	Refer BOM (Annexure-I & II)
	32	Instrument connection	½" NPT(F)
	33	Bore diameter	9MM & Above
GAUGE TEST	34	Compatibility (TG+TW)	10% or min. 2 of each range / type
	35	Functional Test	10% or min. 2 of each range / type
	36	Calibration & Accuracy	10% or min. 2 of each range / type
GAUGE CERTIFICATE	37	Material compliance	100% Review
	38	Internal Test Reports	100% Review
	39	Calibration	100% Review
	40	Functional test	100% Review
	41	Ingress prot. Test	100% Review
	42	Over Temp Stability	100% Review
WELL TEST	43	Compatibility (TG+TW)	10% or min. 2 of each type
	44	Dimensional Check	10% or min. 2 of each type
	45	Hydrotest	10% or min. 2 of each type
WELL CERTIFICATE	46	Material compliance	100% Review
	47	Radiography	100% Review
	48	Dimensional Check	100% Review
	49	Hydrotest	100% Review
	50	Liquidd penetration test	100% Review for weld joints
	51	IBR Form-IIIC	100% Review
	52	PMI test-SS & AS	100% Review

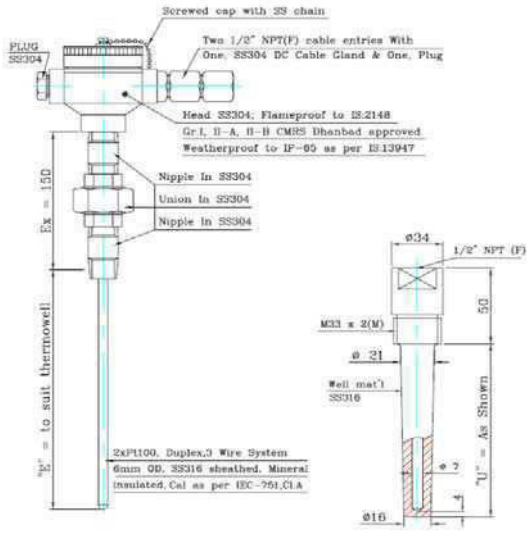

HYDERABAD	PRODUCT STANDARD PROJECT ENGINEERING & SYSTEMS DIVISION HYDERABAD	Doc No: PEIC - 04202 REV. 00 Data sheet No:TG-DS-01

Temperature Gauge (TG) With ThermoWell (TW) Technical Data Sheet

GENERAL	1	Range & Qty.	As per skids	THERMOWELL	30	TW Const.	Drilled Bar Stock, SS 316 /446
	2	Type	Surface mount /Local Gauge		31	Insertion length "U"	To be provided during order execution
	3	Ambient Temp Limit	- 40 to 80°C		32	Dimension	Tapered from
					33	Process Conn.	M33*2
GAUGE SPECIFICATION	4	Sensor Type	Bi-Metallic		34	Flange rating & material	Refer BOM (Annexure-I & II)
	5	Dial Size	150MM (6")		35	Instrument connection	½" NPT(F)
	6	Accuracy	±1% of full scale deflection		36	Bore diameter	9MM & Above
	7	Instrument connection	1/2" NPT(M)	GAUGE TEST	37	Compatibility (TG+TW)	10% or min. 2 of each range / type
	8	Over Range Protection	> 130% of full scale.		38	Functional Test	10% or min. 2 of each range / type
	9	Protection	IP 65		39	Calibration & Accuracy	10% or min. 2 of each range / type
	10	Zero & Span adjustment	External Required.				
	11	Anti-corrossive Dial	Non-Rusting Plastic, White with black figure				
	12	Micro meter Adjustment	Required for pointers.	GAUGE CERTIFICATE	40	Material compliance	100% Review
	13	Scale type	Concentric, Graduated units		41	Internal Test Reports	100% Review
	14	Pointer-270° Deflection	Yes,Metal with Black Finish		42	Calibration	100% Review
	15	Stem outer dia	8 MM		43	Functional test	100% Review
	16	Adjustable, 3-piece union	Required for 150 MM.		44	Ingress prot. Test	100% Review
	17	Immersion Adjustment	Required, 100mm to 300mm		45	Over Temp Stability	100% Review
	18	Bezel ring	Bayonet Lock Type				
	19	Movement	Geared / Cam-roller type	WELL TEST	46	Compatibility (TG+TW)	10% or min. 2 of each type
	20	Pointer Stop	Required at both end		47	Dimensional Check	10% or min. 2 of each type
					48	Hydrotest	10% or min. 2 of each type
MATERIAL	21	Hazardous area class	Zone-1, IIA/IIB, T3.	WELL CERTIFICATE	49	Material compliance	100% Review
	22	Case	SS304		50	Radiography	100% Review
	23	Stem	SS316		51	Dimensional Check	100% Review
	24	Window Glass	Shatter Proof.		52	Hydrotest	100% Review
	25	Tag Plate	SS 304.		53	Liquidd penetration test	100% Review for weld joints
	26	3 piece Union	SS304		54	IBR Form-IIIC	100% Review
	27	Pointer	Alluminium.		55	PMI test-SS & AS	100% Review
	28	Bezel Ring	SS 304				
	29	Temperature Bulb	Min. SS 316				

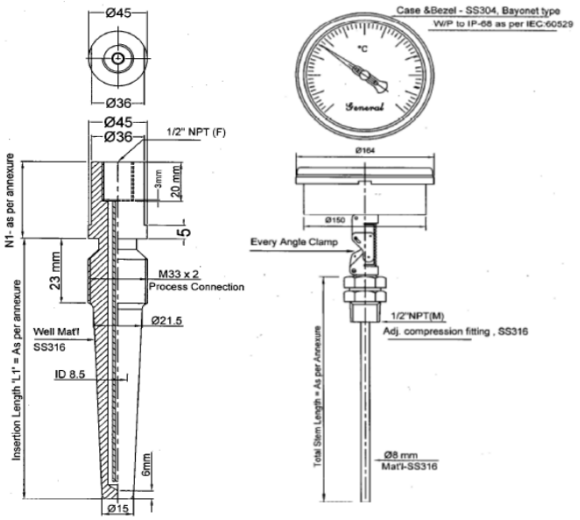

HYDERABAD	PRODUCT STANDARD PROJECT ENGINEERING & SYSTEMS DIVISION HYDERABAD	Doc No: PEIC - 04202 REV. 00 Data sheet No:RTD-DS-01

RTD With ThermoWell (TW) Technical Data Sheet

GENERAL	1	Range & Qty.	As per skids	THERMOWELL	26	TW Const.	Drilled Bar Stock, SS 316 /446
	2	Type	3-Wire, PT100, Duplex		27	Insertion length "U"	Refer BOM (Annexure-I & II)
					28	Dimension	As per below drawing
					29	Process Conn.	1.5" RF
ELEMENT SPECIFICATION	3	Sensor Type	Duplex, Insulated,filled with MgO		30	Flange rating & material	Refer BOM (Annexure-I & II)
	4	Leads	Hermitically sealed		31	Instrument connection	½" NPT(F)
	5	Accuracy	As per DIN43760, ClassA / IEC 751		32	Bore diameter	9MM & Above
	6	Instrument connection	1/2" NPT(M)	GAUGE TEST	33	Compatibility (TG+TW)	10% or min. 2 of each range / type
	7	Head Type/Connection	Screwed / 1/2" NPT (F)		34	Functional Test	10% or min. 2 of each range / type
	8	Protection	IP 65		35	Calibration & Accuracy	10% or min. 2 of each range / type
	9	Sensor Wire Size	20 AWG				
	10	Element outer dia	Suitable to fit in TW without Air gap				
	11	Element Length	Suitable to reach at bottom of TW	GAUGE CERTIFICATE	36	Material compliance	100% Review
	12	Hot Junction	Grounded		37	Internal Test Reports	100% Review
	13	Terminal Block	Screw Type		38	Calibration	100% Review
	14	Electrical Connection	2 Nos of 1/2" NPT (F)		39	Functional test	100% Review
	15	Immersion Adjustment	Required, 100mm to 300mm		40	Ingress prot. Test	100% Review
ACCESSORIES	16	Adjustable, 3-piece union	Required for 150 MM.		41	Over Temp Stability	100% Review
	17	Cable Glands	SS Double Compression+FlameProof				
	18	Cable entry Plugs	Reqd, SS 304	WELL TEST	42	Compatibility (TG+TW)	10% or min. 2 of each type
	19	Cap Chain	Reqd, SS 304		43	Dimensional Check	10% or min. 2 of each type
					44	Hydrotest	10% or min. 2 of each type
MATERIAL	20	Hazardous area class	Zone-1, IIA/IIB, T3.	WELL CERTIFICATE	45	Material compliance	100% Review
	21	Case	SS304		46	Radiography	100% Review
	22	Sheath	SS316		47	Dimensional Check	100% Review
	23	Head	SS304		48	Hydrotest	100% Review
	24	Terminal Block	Heat Resist Ceramic		49	Liquidd penetration test	100% Review for weld joints
	25	Tag Plate	SS		50	IBR Form-IIIC	100% Review
					51	PMI test-SS & AS	100% Review

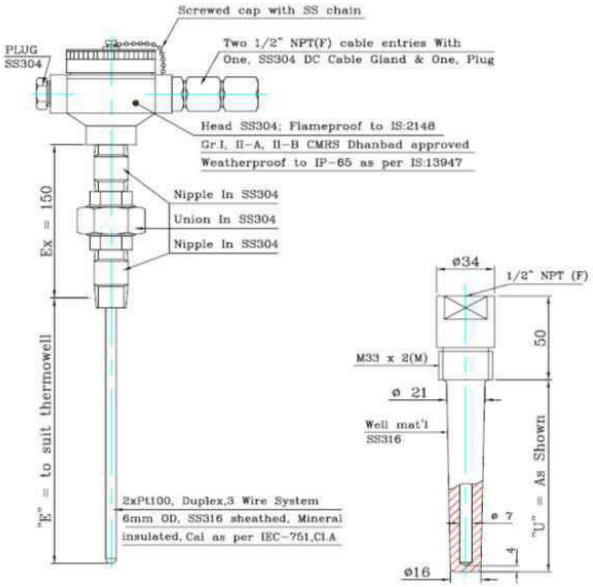

LEVEL SWITCHES

UNITS: Flow-> Gas->M3/hr, Steam->TPH, Temperature-> deg C Level/Length-> mm

1	Type		Float	15	Max. Working Pr.		
2	Float Material		SS 316	16	Max. Working Temp.		
3	External Cage		Vendor to Specify	17	Process Conn.	Vendor to specify	
4	Enclosure		Die Cast Aluminium	18	Conn. Location	Vendor to specify	
5	Contact form		Vendor to Specify	19			
6	Contact Rating		Vendor to Specify	20	Paint Finish	As per project reqt.	
7	Protection		IP 65	21	Mounting		
8	Range		Vendor to Specify	22	Cable Glands	1/2" NPT M	Ni. Plated
9	Signalization		Micro Switch	23			
10	Cable Entry		1/2" NPT F	24			
11	No. Of Entry		One	25	**Make&Model No.**	**VENDOR TO SPECIFY**	
12	Repatability		+/- 0.5% FSR				
13							
14							

Note:

☐ Deviation ☐ NO-Deviation VENDORS SIGNATURE WITH SEAL

Vendor Name		PO No		DATE	PREP	CHK	APR
Vendor Dwg no:		Requisition No					
		Client:					
BHARAT HEAVY ELECTRICALS Ltd PROJECT ENGG DIVISION(C&I) RC PURAM, HYDERABAD-32		Plant:		Data Sheet No			Rev

Signal Cables

1	Application - Signal Cable	Intrinsically Safe / Non Intrinsically Safe				
2	Number of pairs / triads / cores	1 / 6 / 8/ 12 pair and Traid				
3	Conductor Cross Section	1.5 mm^2 Stranded				
4	Conductor Material	Copper (minimum 7 wires)				
5	Construction	Annealed tinned electrolytic grade stranded copper conductor of 1.5 mm^2 (7x0.53mm) or 0.5 mm^2 (7x0.3mm) as per IS 8130				
6	Twisted Pair	Yes, 13 times / meter				
7	Individual Pair Shielding	Each pair/triad individually shielded with 0.05 mm thick (min) Aluminium mylar tape with 25% overlap giving 100% coverage.Plus annealed tinned stranded copper drain wire of size 0.5mm2 (7x0.3 mm) in continuous contact with aluminium side of shield.				
8	Cable Bundling (For Multi Pair)	Each pair/triad of individual shielding as above shall be individually wrapped with mylar / polyster tape of thickness 0.075 mm & bundled together to form a cable with 4 to 6 twists per meter. Plus a pair of communication wire of annealed tinned stranded copper wire of 0.5 mm2 (7x0.3 mm). Conductor with type-C, HR PVC 85°C insulation of thickness 0.4 mm (min.) bundled together with multi pair cables & overall wrapped withmylar / polyester tape.				
9	Overall Shielding	Aluminum mylar tape of minimum thickness 0.075 mm (100% coverage with 25% overlapping) along with annealed tinned stranded copper drain wire of size 0.5mm2 (7x0.3 mm) in continuous contact with aluminum side of the shield shall be provided.				
10	Communication Wire	Required				
11	Conductor : Insulation	Extruded, type C, 85° C, HR PVC compound as per IS 5831. The thickness shall be 0.5 mm minimum for 0.5 mm^2 conductor & 0.8 mm for 1.5 mm^2 conductor. Negative tolerance on				
12	Insulation : Identification Color	Colour of core insulation shall be normally black & blue in pair, black, blue and brown for triad				
13	Multi Pair Identification	By number printing on both cores of each pair at an interval of not more than 200 mm.				
14	Inner Sheath / colour	Extruded PVC or Fire Retardant (FR) Extruded PVC as per material code, 90° C, type- ST2 as per IS:5831 with nonmetallic rip cord under the sheath. The thickness shall be as per IS 1554 Part 1. Inner sheath colour shall be normally black				
15	Outer Sheath / colour	Extruded PVC with Flame Retardant Low Smoke (FRLS) or Flame Retardant (FR) properties as per material code, 90° C, type- ST2 as per IS 5831. The thickness shall be as per IS 1554 Part 1. Colour shall be normally black for non-intrinsic safe & light blue for intrinsic safe cable				
16	Armor Type	Armour over inner sheath shall be galvanised round steel wire or flat strips as per IS 1554, Part-I, latest revision.				
17	Rip cord	Provided				
18	Overall Diameter	VENDOR TO SPECIFY				
19	Insulation Resistance	100 Mohmns / Km				
20	Voltage Grade	600 / 1100 V				
21	Max. DC Conductor Resistance at 20 Deg C	≤ 12.3 ohms / km for cables with 1.5 mm^2 conductors and ≤ 39.7 ohms / km for 0.5 mm^2 conductors.				
22	Mutual Capacitance at 1 KHz	≤ 0.2 μ F/km between adjacent cores in a pair at 1000 Hz.				
23	Cap. between any core or between any screen	≤ 0.4 μ F/ Km at 1000 Hz				
24	Inductance at 1KHz	≤ 1.0 mH / Km between conductor of each pair				
25	L/R Ratio	≤ 25 μ H / Ohm (For 0.5 mm2) / ≤ 40 μ H / Ohm (For 1.5 mm2)				
26	Drain wire + Shield Resistance	≤ 30 Ohm / Km.				
27	Electrostatic noise rejection ratio	Over 76 dB				
28	Attenuation	≤ 1.2 dB / Km				
29	Special Requiements for cables of Intrinsically – safe circuits					
	Primary Insulation	Low density 70° C polyethylene (LDPE) as per IS-6474				
	Inductance	≤ 0.9 μ H /Km between conductors of each pair at 1000 HZ				
	Capacitance	≤0.06 μ F/ Km between conductors of each pair at 1000 Hz				
	Oxygen index	Over 30% at room temperature				
30	Temperature index	Over 250° C.				
31	HCL gas emission	20% (max.)				
32	Smoke density	60% (max.)				
33	Manufacturer	Vendor to Specify				
34	Quantity	1 Pair	1 Traid	6/8/12 Pair	6/8/12 Traid	
	in meters					

Deviation NO-Deviation VENDORS SIGNATURE WITH SEAL

Vendor Name		PO No		DATE	PREP	CHK	APR
Vendor Dwg no:		Requisition No					
		Client:					
BHARAT HEAVY ELECTRICALS Ltd PROJECT ENGG DIVISION(C&I) RC PURAM, HYDERABAD-31		Plant:		Data Sheet No			Rev

Control Cables

1	Application - Control Cable	Non Intrinsically Safe					
2	Number of pairs / triads / cores	3 / 7 / 12 / 16 / 19/ 24 Core					
3	Conductor Cross Section	7 no/0.67 each for 2.5 sqmm					
4	Conductor Material	Stranded E.C grade High Conductivity Copper class 2 as per IS-8130.					
5	Construction	Annealed tinned electrolytic grade stranded copper conductor of 1.5 mm^2 (7x0.53mm) or 0.5 mm^2 (7x0.3mm) as per IS 8130					
6	Twisted Pair	Yes, 13 times / meter					
7	Individual Pair Shielding	Not Applicable					
8	Overall Shielding	Aluminum mylar tape of minimum thickness 0.075 mm (100% coverage with 25% overlapping) along with annealed tinned stranded copper drain wire of size 0.5mm2 (7x0.3 mm) in continuous contact with aluminum side of the shield shall be provided.					
9	Communication Wire	Not Applicable					
10	Conductor : Insulation	Extruded PVC type A IS:5831. Nominal Thickness as per IS:1554.					
11	Insulation : Identification Color	Colour of core insulation shall be normally black & red					
12	Multi Core Identification	By number printing on both cores of each pair at an interval of not more than 200 mm.					
13	Inner Sheath / colour	Type ST-1 Extruded PVC. Black and Red					
14	Outer Sheath / colour	Type ST-1 , Extruded PVC with FRLS property. Black					
15	Armor Type	Armouring shall be as per method (b) of IS-1554 (part-1). (i) calculated dia under armour <13 mm –GI wire armour (ii) calculated dia under armour >13 mm –GI strip armour					
16	Rip cord	Provided					
17	Overall Diameter	VENDOR TO SPECIFY					
18	Insulation Resistance	100 Mohmns / Km					
19	Voltage Grade	650/1100 V.					
20	Max. DC Conductor Resistance at 20 Deg C	≤ 7 ohms / km					
21	Mutual Capacitance at 1 KHz	≤ 0.2 μ F/km between adjacent cores in a pair at 1000 Hz.					
22	Cap. between any core or between any screen	≤ 0.4 μ F/ Km at 1000 Hz					
23	Inductance at 1KHz	≤ 1.0 mH / Km between conductor of each pair					
24	L/R Ratio	≤ 25 μ H / Ohm (For 0.5 mm2) / ≤ 40 μ H / Ohm (For 1.5 mm2)					
25	Drain wire + Shield Resistance	≤ 30 Ohm / Km.					
26	Electrostatic noise rejection ratio	Over 76 dB					
27	Attenuation	≤ 1.2 dB / Km					
28	Primary Insulation	-					
29	Inductance	-					
30	Capacitance	-					
31	Oxygen index	29%					
32	Temperature index	Over 250° C.					
33	HCL gas emission	20% (max.)					
34	Smoke density	60% (max.)					
35	Manufacturer	Vendor to Specify					
36	Quantity	3 Core	7 Core	12 Core	16 Core	19 Core	24 Core
	in meters						

Deviation NO-Deviation VENDORS SIGNATURE WITH SEAL

Vendor Name		PO No		DATE	PREP	CHK	APR
Vendor Dwg no:		Requisition No					
		Client:					
BHARAT HEAVY ELECTRICALS Ltd PROJECT ENGG DIVISION(C&I) RC PURAM, HYDERABAD-31		Plant:		Data Sheet No			Rev

Thermocouple Cables (K - Type)

1	Application	Thermocouple extension cable with individual & overall shielding.			
2	Number of pairs / triads / cores	1 Pair x 16AWG , 6/8/12 Pair X 20 AWG			
3	Conductor Cross Section	Solid thermocouple conductor of diameter 16 AWG or 20 AWG			
4	Conductor Material	As per IS-8784. / IEC 584			
5	Construction	Annealed tinned electrolytic grade stranded copper conductor of 1.5 mm² (7x0.53mm) or 0.5 mm² (7x0.3mm) as per IS 8130.			
6	Twisted Pair	Yes, 13 times / meter			
7	Individual Pair Shielding	Each pair individually shielded with 0.05 mm thick (min)aluminum mylar tape with 25% overlap giving 100% coverage. Plus annealed tinned multistranded copper drain wire of size 0.5mm2 (7x0.3 mm) in continuous contact with aluminum side of shield.			
8	Cable Bundling (For Multi Pair)	Each pair/triad of individual shielding as above shall be individually wrapped with mylar / polyster tape of thickness 0.075 mm & bundled together to form a cable with 4 to 6 twists per meter. Plus a pair of communication wire of annealed tinned stranded copper wire of 0.5 mm2 (7x0.3 mm). Conductor with type-C, HR PVC 85°C insulation of thickness 0.4 mm (min.) bundled together with multi pair cables & overall wrapped withmylar / polyester tape.			
9	Overall Shielding	Aluminum mylar tape of minimum thickness 0.075 mm (100% coverage with 25% overlapping) along with annealed tinned stranded copper drain wire of size 0.5mm2 (7x0.3 mm) in continuous contact with aluminum side of the shield shall be provided.			
10	Communication Wire	Not Applicable			
11	Conductor : Insulation	Extruded, type C, 85° C, HR PVC compound as per IS 5831. The thickness shall be 0.5 mm minimum for 20 AWG (0.5 mm2) conductor & 0.8 mm minimum for 16 AWG (1.32 mm2) conductor. Negative tolerance on insulation thickness is not acceptable. Higher thickness may be considered to meet the electrical parameters.			
12	Core Identification	For IEC 584 cables - Colour of core insulation shall be as per IS 8784. For ANSI M.C. 96.1 cables - Colour of core insulation shall be as per ANSI M.C. 96.1.			
13	Inner Sheath / colour	Extruded PVC or Fire Retardant (FR) Extruded PVC as pervariant table, 90° C, type- ST2 as per IS:5831 with non-metallic rip cord under the sheath. The thickness shall be as per IS 1554 Part 1. Inner sheath colour shall be normally black			
14	Outer Sheath / colour	Extruded PVC with Flame Retardant Low Smoke (FRLS) or Flame Retardant (FR) properties as per enquiry, 90° C, type- ST2 as per IS 5831. The thickness shall be as per 'Nominal value' of IS 1554 Part 1, with tolerance of ±0.2 mm. Colour shall be normally IS 8784 or ANSI MC 96.1			
15	Armor Type	Armour over inner sheath shall be galvanised round steel wire as per Table – 5, schedule -'b' of IS 1554, Part-I.			
16	Rip cord	Provided			
17	Overall Diameter	VENDOR TO SPECIFY			
18	Themo EMF accuracy & calibration tolerance	For IEC 584- 2 : class-1 For ANSI M.C. 96.1: class- Special			
19	Insulation Resistance	100 Mohmns / Km			
20	Voltage Grade	600 / 1100 V			
21	Cap. between any core or between any screen	≤ 0.18 μ F/ Km at 1000 Hz			
22	Inductance at 1KHz	≤ 4.0 mH / Km between conductor of each pair			
23	L/R Ratio	≤ 25 μ H / Ohm (For 20n AWG) / ≤ 40 μ H / Ohm (For 16 AWG)			
24	Drain wire + Shield Resistance	≤ 30 Ohm / Km.			
25	Electrostatic noise rejection ratio	Over 76 dB			
26	Attenuation	≤ 1.2 dB / Km			
27	Primary Insulation	-			
28	Inductance	-			
29	Capacitance	-			
30	Oxygen index	29%			
31	Temperature index	Over 250° C.			
32	HCL gas emission	20% (max.)			
33	Smoke density	60% (max.)			
34	Manufacturer	Vendor to Specify			
35	Quantity	1 Pair x 16AWG	6Pair X 20 AWG	8 Pair X 20 AWG	12 Pair X 20 AWG
	in meters				

Deviation NO-Deviation VENDORS SIGNATURE WITH SEAL

Vendor Name		PO No		DATE	PREP	CHK	APR
Vendor Dwg no:		Requisition No					
		Client:					
BHARAT HEAVY ELECTRICALS Ltd PROJECT ENGG DIVISION(C&I) RC PURAM, HYDERABAD-31		Plant:		Data Sheet No			Rev

16.0 ANNEXURE-4 (INSPECTION AND TEST PLAN)

Notes:

1. This inspection and test table gives overall guidelines.The supplier shall develop ITP for each type of instrument withrespect to all specific requirements as applicable to ensure compliance with codes ,specifications and/or contractual requirements .
   Supplier's ITP is subject to approval by client

2. Supplier shall carry out 100% inspection for compliance with requirements of purchase order at every stage of manufacturing. Supplier shall maintain records / documents of all the inspections/ tests carried out and will satisfy himself about the acceptability of the item before offering the item for inspection by client.

3. R - Review
   W - Witness

Sl.No.	Equipment	Material Test	Dye Penetration Test	Radiographic Testing	Visual Inspection	Dimensional Inspection	Hydro Testing / Over Pressure	Seat Leakage	Calibration	Performance / Functional Testing	Pneumatic Testing	HV / Inst. Test	Fire Safety	IBR	Factory Acceptance Test	Certificate from Statutory body
1	Presure Gauges and Diff. Pressure Gauges	R			W	W			R	W						
2	Temperature Gauges	R			W	W			R	W						
3	Temperature Element with Thermowell	R			W	W			R	W						
4	Level Gauges (Transparent / Reflex)	R			W	W			R	W						
5	Level Transmitter (Radar)	R			W	W			R	W						
6	Field Transmitters(Pressure, Flow, Level)	R			W	W			R	W					W	
7	Flow Element	R			W	W			R							
8	Flow Meters (Mass, Vortex, Ultrasonic, etc.)	R		R	W	W			R							R
9	Rotameter	R			W	W			R	W						
10	Control Valves with Complete Assbly.	R	R	R	W	W	R	R	R	W	W			R	W	R
11	On-Off Valves with Complete Assembly	R	R	R	W	W	R	R	R	W	W			R	W	R
12	Pressure Relief Valves	R	R	R	W	W	R	R	R	W	W			R		R
13	Signal and Control Cables	R			W	W						W				

Sl.No.	Equipment	Material Test	Dye Penetration Test	Radiographic Testing	Visual Inspection	Dimensional Inspection	Hydro Testing / Over Pressure	Seat Leakage	Calibration	Performance / Functional Testing	Pneumatic Testing	HV / Inst. Test	Fire Safety	IBR	Factory Acceptance Test	Certificate from Statutory body
14	Junction Boxes & Cable Glands	R			W	W										
15	Analysers	R			W	W				W						
16	Control Panel	R			W	W									W	
17	PLCs , HMI etc				W	W									W	
18	Switches (Level, Pressure, Diff. Pr., Vibration , Reverse rotation)	R			W	W			R	W						
19	Pipes and pipe Fittings, Tube and Tube fittings	R			W	W								R		

ANNEXURE-5 INSTRUMENT INSTALLATION DRAWINGS.

PAGE NO	DESCRIPTION	REV NO		
		00		
1	INDEX	X		
2	TECHNICAL NOTES	X		
3	TEMP GAUGE WITH THERMOWELL /RTD & THERMOCOUPLE WITH THERMOWELL	X		
4	DIAPHRAGM SEAL PRESSURE TRANSMITTER/GAUGE	X		
5	REMOTE SEAL LEVEL INSTRUMENT	X		
6	LEVEL GAUGE	X		
7	RADAR LEVEL TRASNMITTER	X		
8	CONTROL VALVE WITH POSITIONER	X		
9	PG/PT FOR ALL SERVICES (STAINLESS STEEL)	X		
10	DPG/DPT FOR ALL SERVICES (STAINLESS STEEL)	X		
11	INSTRUMENT SUPPORT SIGNAL INSTRUMENT	X		
12	INSTRUMENT SUPPORT TWO INSTRUMENTS	X		
13	SUPPORT DETAILS FOR JUNCTION BOX	X		
14	JN. BOX WITH PERFORATED TRAY MOUNTING ON STEEL COLUMN (TYP)	X		
15	PERFORATED TRAY SUPPORTS and CABLES CLAMPING DETAILS	X		

FIRST ANGLE PROJECTION

(ALL DIMENSIONS ARE IN mm)

Pos. No.	DESCRIPTION			QTY/SET [A]	UNITs
C07	NIPPLE	SA 106 Gr. B	1/2" PL x NPT(M), SCH 80	4	No's
C38	GATE VALVE	A 105	1/2" SW, CL 800	2	No's
C51	CAP	A 105	1/2" NPT(F), CL 3000	2	No's

SCHEME:LG-CS-600#-L

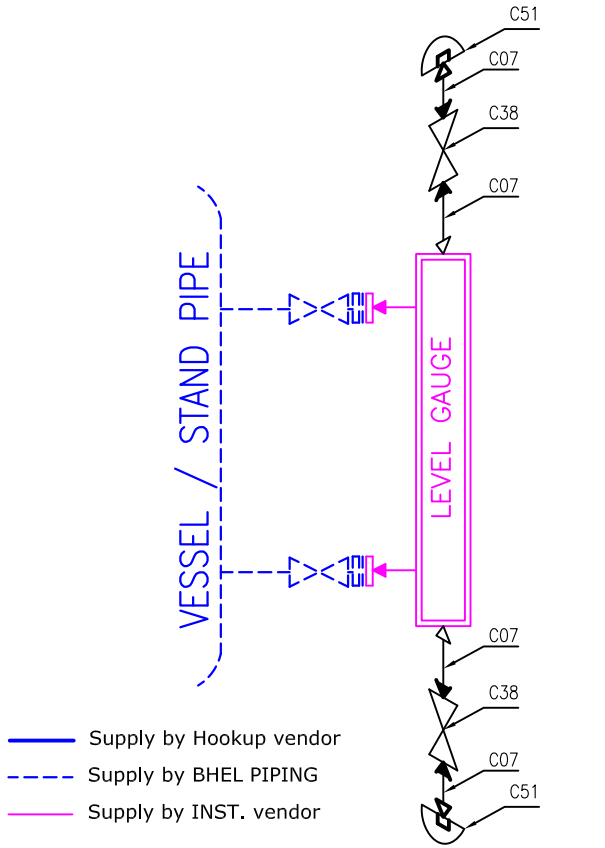

Note-1:Materials shown in "DETAIL-A" are required only if drip ring is not supplied along with instrument. Requirement of these item shall be separately mentioned in enquiry with separate material code.

MATERIAL	RATING	INSTRUMENT	SERVICE
CARBON STEEL	Upto 600#	LEVEL GAUGE	LIQUID

REV.	DATE	ALTERED	REV.	DATE	ALTERED	REV.	DATE	ALTERED
		CHD/APPD			CHD/APPD			CHD/APPD
ZONE			ZONE			ZONE		

BHARAT HEAVY ELECTRICALS LTD. HYDERABAD

	NAME	SIGN.	DATE	NO.OF VAR.
DRN.	SUJATHA		30.12.14	–N.A.–
CHD.	KAMAL		16.01.15	
APPD.	SEKHAR		31.01.15	

DEPT.	UNTOL. DIMS. GR.	SCALE	WEIGHT (KG)	REF. TO ASSY. DRG.	ITEM NO.	NO.OF ITEMS
PE&SD CODE 450	~~C/A1/F~~	NTS	N.A	–N.A.–	–N.A.–	–N.A.–

TITLE: INSTRUMENT INSTALLATION DRAWINGS

CARD CODE: N.A.

DRAWING NO.

REV. 00

SHT. No 07 NO. OF SHT.

GENERAL DIMENSIONAL LIMITS,FITS & TOLERANCES AS PER HY0230261

SIGN. AND DATE | REF. DRG. NO. | COMPUTER FILE NAME | INVENTORY NO

THE INFORMATION ON THIS DOCUMENT IS THE PROPERTY OF BHARAT HEAVY ELECTRICALS LIMITED. IT MUST NOT BE USED DIRECTLY OR INDIRECTLY IN ANY WAY DETRIMENTAL TO THE INTEREST OF THE COMPANY

FIRST ANGLE PROJECTION

(ALL DIMENSIONS ARE IN mm)

THE INFORMATION ON THIS DOCUMENT IS THE PROPERTY OF BHARAT HEAVY ELECTRICALS LIMITED. IT MUST NOT BE USED DIRECTLY OR INDIRECTLY IN ANY WAY DETRIMENTAL TO THE INTEREST OF THE COMPANY

GENERAL DIMENSIONAL LIMITS,FITS & TOLERANCES AS PER HY0230261

COMPUTER FILE NAME | REF. DRG. NO. | SIGN. AND DATE | INVENTORY NO

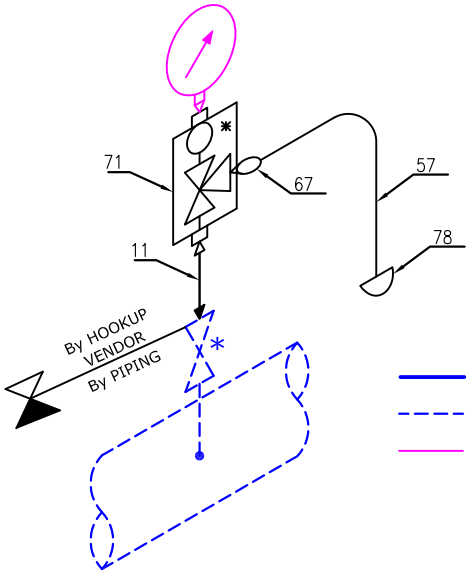

Supply by Hookup vendor

Supply by PIPING

Supply by INST. vendor

For ALL lines::

Pos. No.	DESCRIPTION			QTY/SET	UNITs	IBR in IIIC	Swagelok/ Parker Make
11	NIPPLE	SS 316L	1/2" PL x NPT(M), SCH 80S	2	No's	Not required	NO
57	TUBE (SMLS)	SS 316L	1/2" OD X 2.1 mm	6	Mtrs	Not required	NO
67	MALE CONNECTOR	SS 316	1/2"NPT(M) x 1/2" OD TUBE, CL6000	1	No's	Not required	YES
71	3 WAY MANIFOLD	SS 316	1/2" NPT(F), CL6000	1	No's	Not required	YES
78	TUBE CAP	SS 316	1/2" OD, CL6000	1	No's	Not required	YES

1) Tube fittings shall be Swagelok / parker make only.
2) Tube & tube fittings shall be provided all applications

*-> Double isolation valves shall be provided for High pressure applications.

Tapping Orientations

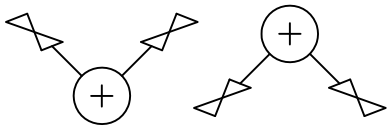

NOTEs ::

(1) The items listed above shall be supplied in loose condition.

(2) Welding shall be done at site.

(3) BOM listed above shall be packed instrument wise in ONE packing box except pipe/tubes.

(4) Packing of pipes / tubes shall be as per vendor practice.

REV.	DATE	ALTERED	REV.	DATE	ALTERED	REV.	DATE	ALTERED
		CHD/APPD			CHD/APPD			CHD/APPD
ZONE			ZONE			ZONE		

BHARAT HEAVY ELECTRICALS LTD. HYDERABAD

	NAME	SIGN.	DATE
DRN.	SUJATHA		30.12.14
CHD.	KAMAL		16.01.15
APPD.	SEKHAR		31.01.15

NO.OF VAR. –N.A.–

DEPT. PE&SD | CODE 450 | UNTOL. DIMS. GR. ~~C/A1/F~~ | SCALE NTS | WEIGHT (KG) N.A | REF. TO ASSY. DRG. –N.A.– | ITEM NO. –N.A.– | NO.OF ITEMS –N.A.–

TITLE: INSTALLATION DRAWING for PRESSURE GAUGE (Tube fittings)

CARD CODE N.A.

DRAWING NO. PG-TUBE-01 | REV. 00

SHT. No 01 | NO. OF SHT. 01

FIRST ANGLE PROJECTION

(ALL DIMENSIONS ARE IN mm)

THE INFORMATION ON THIS DOCUMENT IS THE PROPERTY OF BHARAT HEAVY ELECTRICALS LIMITED. IT MUST NOT BE USED DIRECTLY OR INDIRECTLY IN ANY WAY DETRIMENTAL TO THE INTEREST OF THE COMPANY

GENERAL DIMENSIONAL LIMITS,FITS & TOLERANCES AS PER HY0230261

COMPUTER FILE NAME | REF. DRG. NO. | SIGN. AND DATE | INVENTORY NO

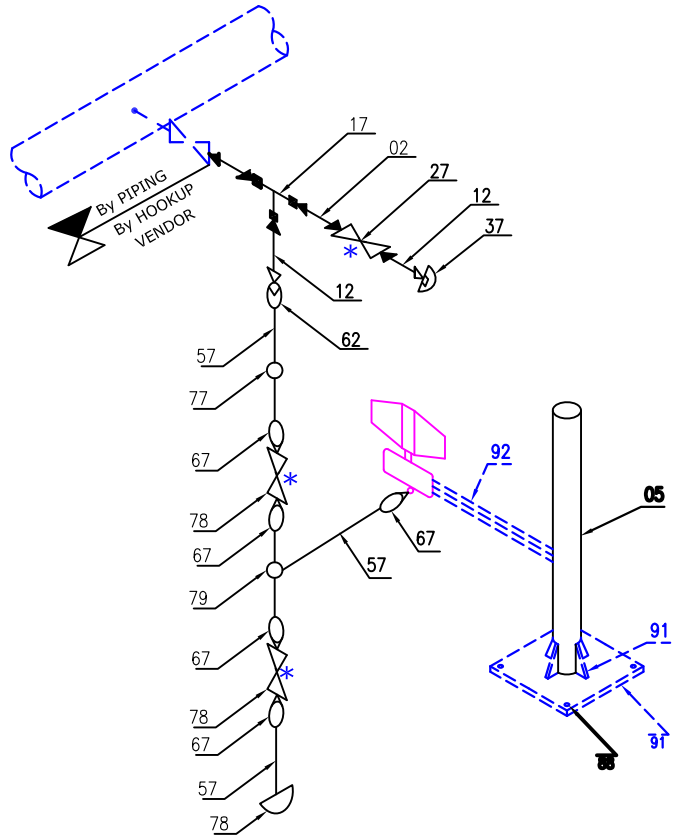

Pos. No.	DESCRIPTION			QTY/SET	UNITs	IBR in IIIC	Swagelok/ Parker Make
02	PIPE (SMLS)	SS 316L	1/2" SCH 160S	3	Mtrs	As per skid	NO
12	NIPPLE	SS 316L	1/2" PL x NPT(M), SCH 160S	2	No's	As per skid	NO
17	EQUAL TEE	SS 316	1/2" BW, CL 6000	1	No's	As per skid	NO
27	GATE VALVE	SS 316	1/2" BW, CL 1500	1	No's	As per skid	NO
37	CAP	SS 316	1/2" NPT(F), CL 6000	1	No's	As per skid	NO
57	TUBE (SMLS)	SS 316L	1/2" OD X 2.1 mm	12	Mtrs	As per skid	NO
77	TUBE UNION	SS 316	1/2" OD, CL6000	2	No's	As per skid	YES
62	FEMALE CONNECTOR	SS 316	1/2"NPT(F) x 1/2" OD TUBE, CL6000	1	No's	As per skid	YES
67	MALE CONNECTOR	SS 316	1/2"NPT(M) x 1/2" OD TUBE, CL6000	5	No's	As per skid	YES
78	NEEDLE VALVE	SS 316	1/2" NPT(F), CL 1500	2	No's	As per skid	YES
79	UNION TEE	SS 316	1/2" OD, CL3000	1	No's	As per skid	YES
72	5 WAY MANIFOLD	SS 316	1/2" NPT(F), CL6000	1	No's	As per skid	YES
78	TUBE CAP	SS 316	1/2" OD, CL6000	1	No's	As per skid	YES
05	PIPE (SMLS)	SA 106 Gr. B	2" SCH 40	1.5	Mtrs	Not required	NO
86	U-BOLT GALVZD	IS 226	1/2"	4	No's	Not required	NO
88	ANCHOR BOLT	Chro coated MS	M10x160mm	4	No's	Not required	NO
91	STR STEEL MS ANGLE(50x50x6)			2.7012	KG's	Not required	NO
92	STR STEEL 6 mm PLATE			23.55	KG's	Not required	NO

Tapping Orientations

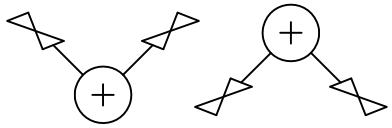

NOTEs ::

(1) The items listed above shall be supplied in loose condition.

(2) Welding shall be done at site.

(3) BOM listed above shall be packed instrument wise in ONE packing box except pipe/tubes.

(4) Packing of pipes / tubes shall be as per vendor practice.

——— Supply by Hookup vendor

– – – – Supply by BHEL PIPING

——— Supply by INST. vendor

∗-> Double isolation valves shall be provided for High pressure applications.

REV.	DATE	ALTERED	REV.	DATE	ALTERED	REV.	DATE	ALTERED
		CHD/APPD			CHD/APPD			CHD/APPD
ZONE			ZONE			ZONE		

BHARAT HEAVY ELECTRICALS LTD. HYDERABAD

	NAME	SIGN.	DATE	NO.OF VAR.
DRN.	SUJATHA		30.12.14	–N.A.–
CHD.	KAMAL		16.01.15	
APPD.	SEKHAR		31.01.15	

DEPT.	UNTOL. DIMS.	SCALE	WEIGHT (KG)	REF. TO ASSY. DRG.	ITEM NO.	NO.OF ITEMS
PE&SD	GR. ~~C/A/F~~	NTS	N.A	–N.A.–	–N.A.–	–N.A.–
CODE 450						

TITLE: INSTALLATION DRAWING for PS / PT (Tube fittings)

CARD CODE: N.A.

DRAWING NO. PT-TUBE-01 REV. 00

SHT. No 07 NO. OF SHT.

FIRST ANGLE PROJECTION

(ALL DIMENSIONS ARE IN mm)

Pos. No.	DESCRIPTION			QTY/SET	UNITs	IBR in IIIC	Swagelok/ Parker Make
11	NIPPLE	SS 316L	1/2" PL x NPT(M), SCH 80S	2	No's	As per skid	NO
57	TUBE (SMLS)	SS 316L	1/2" OD X 2.1 mm	24	Mtrs	As per skid	NO
80	TUBE UNION	SS 316	1/2" OD, CL3000	4	No's	As per skid	YES
63	FEMALE CONNECTOR	SS 316	1/2"NPT(F) x 1/2" OD TUBE, CL3000	2	No's	As per skid	YES
66	MALE CONNECTOR	SS 316	1/2"NPT(M) x 1/2" OD TUBE, CL3000	22	No's	As per skid	YES
78	NEEDLE VALVE	SS 316	1/2" NPT(F), CL 800	4	No's	As per skid	YES
79	UNION TEE	SS 316	1/2" OD, CL3000	2	No's	As per skid	YES
71	5 WAY MANIFOLD	SS 316	1/2" NPT(F), CL3000	1	No's	As per skid	YES
76	TUBE CAP	SS 316	1/2" OD, CL6000	2	No's	As per skid	YES
05	PIPE (SMLS)	SA 106 Gr. B	2" SCH 40	1.5	Mtrs	Not required	NO
86	U-BOLT GALVZD	IS 226	1/2"	4	No's	Not required	NO
88	ANCHOR BOLT	Chro coated MS	M10x160mm	4	No's	Not required	NO
91	STR STEEL MS ANGLE(50x50x6)			2.7012	KG's	Not required	NO
92	STR STEEL 6 mm PLATE			23.55	KG's	Not required	NO

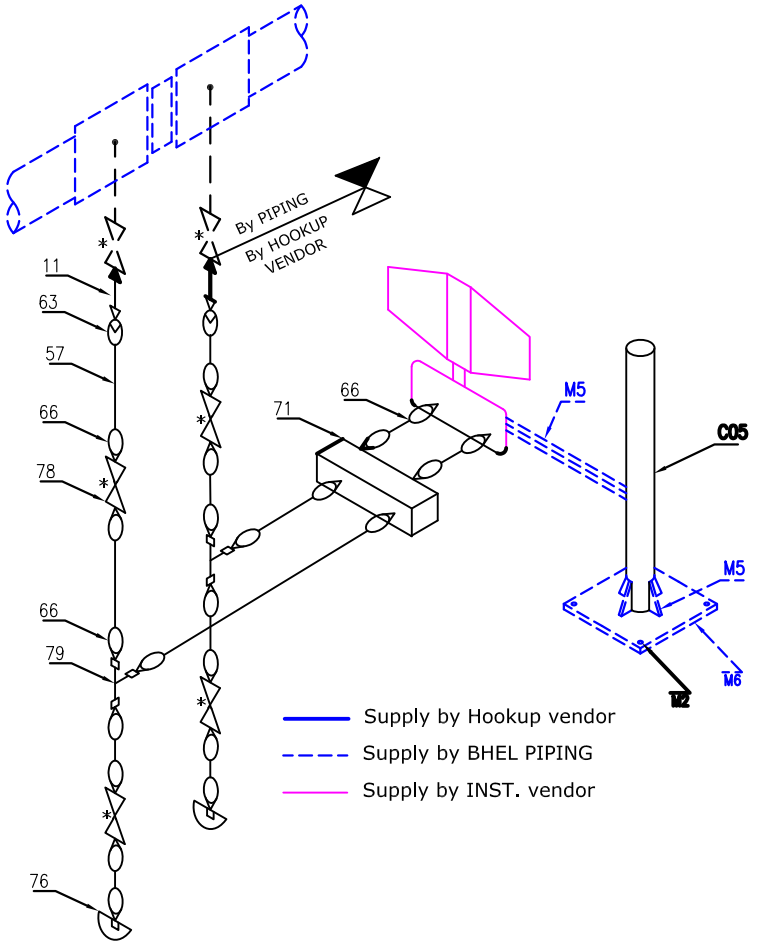

∗-> Double isolation valves shall be provided for High pressure applications.

Tapping Orientations

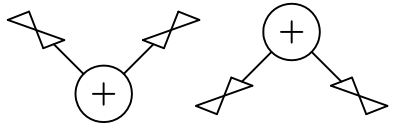

NOTEs ::

(1) The items listed above shall be supplied in loose condition.

(2) Welding shall be done at site.

(3) BOM listed above shall be packed material code wise in ONE packing box except pipe/tubes.

(4) Packing of pipes / tubes shall be as per vendor practice.

THE INFORMATION ON THIS DOCUMENT IS THE PROPERTY OF BHARAT HEAVY ELECTRICALS LIMITED. IT MUST NOT BE USED DIRECTLY OR INDIRECTLY IN ANY WAY DETRIMENTAL TO THE INTEREST OF THE COMPANY

COMPUTER FILE NAME | REF. DRG. NO. | SIGN. AND DATE | INVENTORY NO

GENERAL DIMENSIONAL LIMITS,FITS & TOLERANCES AS PER HY0230261

REV.	DATE	ALTERED	REV.	DATE	ALTERED	REV.	DATE	ALTERED
		CHD/APPD			CHD/APPD			CHD/APPD
ZONE			ZONE			ZONE		

BHARAT HEAVY ELECTRICALS LTD.
HYDERABAD

	NAME	SIGN.	DATE	NO.OF VAR.
DRN.	SUJATHA		30.12.14	–N.A.–
CHD.	KAMAL		16.01.15	
APPD.	SEKHAR		31.01.15	

DEPT.	UNTOL. DIMS. GR.	SCALE	WEIGHT (KG)	REF. TO ASSY. DRG.	ITEM NO.	NO.OF ITEMS
PE&SD CODE 450	~~C/A/F~~	NTS	N.A	–N.A.–	–N.A.–	–N.A.–

TITLE
INSTALLATION DRAWING for
DPG / DPT/ DPS (Tube fittings)

CARD CODE N.A.

DRAWING NO. DPG-TUBE-01 REV. 00

SHT. No 01 NO. OF SHT. 01

HYDERABAD	PRODUCT STANDARD PROJECT ENGINEERING & SYSTEMS DIVISION HYDERABAD	Doc No: PEIC -04202 REV. 00 Data sheet No:PS-DS-01

PRESSURE SWITCH Technical Data Sheet

(1)	GENERAL	Range & Qty.	:	Refer BOM (Annexure-I of this specification)
(2)		Type	:	Field mounted, Weather proof, Blind pressure switch
(3)		Ambient Temp Limit	:	-20 to 100°C; suitable to ambient of Ammonia; copper and copper alloys shall be avoided for all the parts exposed to atmosphere.
(4)	SWITCH	Switching differential	:	Fixed
(5)		Switch	:	Snap Acting Micro switch, hermetically sealed
(6)		Contact rating	:	2 SPDT, 5A @ 240 V AC & 1A @ 24 V DC
(7)		Set point adjuster & terminal block	:	Shall be inside the switch housing
(8)		Repeatability	:	± 1.5 % of full scale range
(9)		Accuracy	:	± 5 % of full scale range for Pr. ≤15 kg/cm2(g)
				± 2 % of full scale range for Pr. > 15 kg/cm2(g)
(10)		Safe working/Static pressure		180 Kg/cm2(g) or less (exact details shall intimated after P.O. placement)
(11)		Process Connection	:	1/2" NPT (F)
(12)		Electrical Connection	:	2 No's of 1/2" NPT (F)
(13)		Protection	:	Weather proof to IP 65
(14)		Impulse Entry	:	Side / Bottom
(15)		Sensing material	:	SS 316L Diaphragm sealed piston
(16)		Wetted parts	:	SS316
(17)		Case	:	Made of low copper die - cast Aluminum Alloy with durable corrosion resistant coating
(18)		Humidity limits	:	0 - 100% RH
(19)	ACCESSORIES	Mounting Bracket with U clamp and fastners	:	Suitable for 2" pipe mounting, MOC: SS304; 1 Set per transmitter
(20)		Cable Glands with Slipper type	:	Nickel plated brass Double Compression type; 2 No's per switch
		PVC sleeves cable shrouds		
(21)		Cable entry Dummy Plugs	:	Required, SS 304 ; 1 No per switch
(22)		Tag Plate	:	Required, SS 316
(23)		Bolts + Nuts	:	Required. A193GrB7 + A194Gr2H
(24)	Inspection & Testing	Bill of Material (model, dim., Tag no's)	:	100% Witness
(25)		Spares (BOM, part no's)	:	100% Witness (if ordered)
(26)		Statutory approvals (main inst & accessories) like CCOE/PESO, BIS, etc	:	100% Review
(27)		Material compliance certificate	:	100% Review
(28)		Calibration certificate	:	100% review.
(29)		Hydro test for pressure parts	:	100% Review
(30)		Ingress Protection Test	:	100% Review

HYDERABAD	PRODUCT STANDARD PROJECT ENGINEERING & SYSTEMS DIVISION HYDERABAD	Doc No: PEIC -04202 REV. 00 Data sheet No:LG-DS-01

Level Gauge Side Mounted Technical Data Sheet

(1)	GENERAL	Range & Qty.	:	As per requirement
(2)		Type	:	Field mounted, Weather proof
(3)		Ambient Temp Limit	:	0 to 50°C and 95% RH max; suitable for tropical climate, ambient of Ammonia & Sulphur; Copper and copper alloys shall be avoided for all the parts exposed to atmosphere.
(4)	LEVEL GAUGE	Type	:	Reflex type
(5)		Body material	:	SS 316
(6)		Cover plate	:	Carbon steel
(7)		Glass	:	Toughened Boroslicate (Klinger/Moxos/Bont)
(8)		Gauge Valves	:	Required at top & bottom of gauge with auto shutoff ball check arrangement
(9)		Minimum Visible length	:	Shall be intimated after P.O. placement.
(10)		Hydraulic test pressure	:	For services rated ANSI #300 : 77 kg/cm2(g) at room temp
				For services rated ANSI #600 : 150 kg/cm2(g) at room temp
				For services rated ANSI #1500 : 370 kg/cm2(g) at room temp
(11)	ACCESSORIES	Vent & Drain needle valve	:	2 No's; MOC: SS316; Size : ½" NPT(F)
(12)		Tag Plate	:	Required, SS 316
(13)		Bolts + Nuts	:	Required. A193GrB7 + A194Gr2H
(14)	Inspection & Testing	Bill of Material (model, dim., Tag no's)	:	100% Witness
(15)		Spares (BOM, part no's)	:	100% Witness (if ordered)
(16)		Material compliance certificate	:	100% Review
(17)		Hydraulic test	:	100% Review
(18)		Radiography for weld joints	:	100% Review
(19)		IBR in Form IIIC	:	100% Review
(20)		Ingress Protection Test	:	100% Review

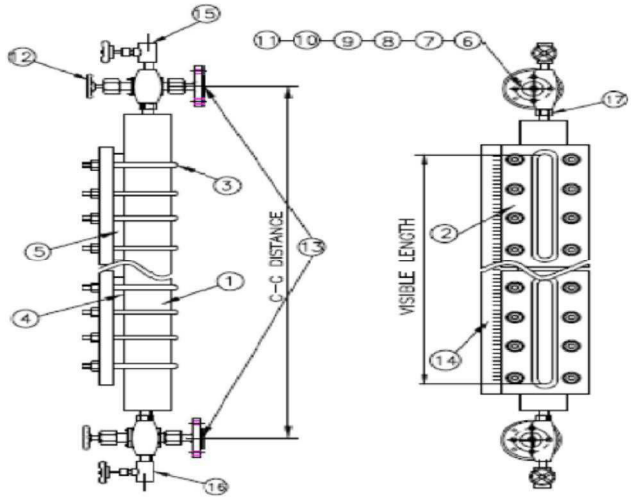

BILL OF MATERIAL

S. No.	DESCRIPTION	MATERIAL
1	CHAMBER	SS 316
2	COVER PLATE	C.S.
3	'U' BOLTS/NUTS	A 193 Gr. B7/A 194 Gr,2H
4	GASKET: TEMP UP TO 150 Deg C	NON ASBESTOS
	GASKET: TEMP ABOVE 150 Deg C	GRAFOIL
5	GLASS	TOUGHENED BOROSILICATE
6	VALVE BODY	SS 316
7	VALVE BONNET	SS 316
8	SPINDLE	SS 316
9	RENEWABLE SEAT	SS 316
10	BALL CHECK	SS 316
11	VALVE PACKING	GRAFOIL
12	HAND WHEEL	C.S.
13	PROCESS FLANGE (1" 300RF)	SS 316
14	SCALE	SS 304
15	VENT NEEDLE VALVE [1/2" NPT(F)]	SS 316
16	DRAIN NEEDLE VALVE [1/2" NPT(F)]	SS 316
17	UNION NIPPLE	SS 316

FIGURE-4 : LEVEL GAUGE (REFLEX TYPE)

COPYRIGHT AND CONFIDENTIAL
The information on this document is the property of BHARAT HEAVY ELECTRICALS LIMITED,
It must not be used directly or indirectly in any way detrimental to the interest of the company.

SPECIFICATION FOR FLOW ORIFICE ASSEMBLY without WET CALIBRATION

1.0 SCOPE

The scope shall include Flow orifice design, manufacture, assembly, testing at vendor's works, like packing and delivery to site as per the specification.

2.0 PROVEN TRACK RECORD

2.1 The items being offered as per specification should be operating satisfactorily in hydrocarbon industry like Refinery, Petrochemical under similar process conditions for at least 4000 Hours. The above criteria shall be applicable to main equipments, sub- components as well as brought out items if any.

2.2 Prototype items or absolute items or item under phase out cycle or program shall not be offered or supplied. Vendor shall submit necessary supporting documents / past users confirmation supporting to above PTR requirements along with technical offer.

3.0 INSTRUCTIONS TO BIDDERS

3.1 Bidders are advised to contact BHEL for essential technical queries in writing within one week of issue of Enquiry. Offers with incomplete information will not be considered for evaluation, and are likely to be rejected outright without any further interaction with the Bidder.

3.2 Unsolicited requests from bidders for alterations to their already submitted offer will not be entertained. These would not be taken cognizance, and offers will be evaluated without taking into account such requests/correspondence.

3.3 Any technical features over & above BHEL enquiry specification requirements] proposed by Bidder will not be given preference for the purpose of evaluation.

3.4 Bidders are advised to comply to specifications in total, unless the requirement is not feasible. **In case feasible deviations are proposed by the bidder and subsequently withdrawn, no commercial implications can be claimed by the bidder.**

3.5 In the event of any conflict between these specifications, data sheets, related standards, codes etc. the vendor shall refer the matter to the purchaser for clarifications and only after obtaining the same shall proceed with the manufacture of the items in question.

3.6 Bidder shall submit duly filled deviation format given in elsewhere in this specification.

4.0 STANDARDS

Latest edition of the following standards shall be followed for design, manufacturing and testing of the Orifice assembly covered under this specification.

1. ANSI B 18.2.1	Construction & Tolerances Of Bar Stock
2. ANSI B 1.1	Standard For Plates
3. ANSI B 16.20	Gaskets for Steel Pipe Flanges
4. ANSI B 16.36/16.5	Steel Pipe Flanges & Flange Fittings
5. ASME B 16.26	Orifice Flange Dimensions.
6. ANSI B 36.10	Dimensions & weights of pipes.
7. ISA 1932	Nozzle/Orifice Design standard
8. ISO 5167	Orifice Plates / Nozzles
9. AGA recommendation	American Gas Association
10. ASTM	American Society for Testing and Materials (ASTM)
11. IBR	Indian Boiler Regulations (IBR)
12. DIN 1952	Rating, execution & installation of flow orifice/nozzle

COPYRIGHT AND CONFIDENTIAL
The information on this document is the property of BHARAT HEAVY ELECTRICALS LIMITED .
It must not be used directly or indirectly in any way detrimental to the interest of the company.

5.0 TECHNICAL REQUIREMENTS

5.1 Technical details required for orifice selection are available in Variant tables. Process Parameters/ sizing parameters shall be furnished after order placement.

5.2 Orifice shall be designed & manufactured as per ISO 5167.

5.3 Orifice material – SS 316.

5.4 Each orifice assembly shall be provided with following features:

5.4.1 Orifice:

a) Thin square edged concentric orifice plate mounted between two flanges for sizes 2” & above.
b) Conical entrance orifice for size 1.5” & below.
c) Carrier ring (only for below 2” size): Same as Flange Material.
d) Surface Roughness – As per ISO 5167.
e) Jack Bolt with nut :
   1) Material : A182 F316,
   2) Quantity – 2 No’s per assembly.
f) Orifice thickness: Up to 6” size 3.18 mm and 6.35 mm for above 6” size.

5.4.2 Flanges:

a) Flange Type, size, material of construction, rating as per respective “MATERIAL CODE” indicated in variant table
b) Flanged assembly end connection shall be butt-welded & schedule shall be suitable for pipe thickness.
c) Flange Body – Forged
d) Flange face Finish:
   1) For 300# class – 125 AARH
   2) Above 300# class – 63 AARH

5.4.3 Branch pipe: Branch pipe shall be supplied for sizes above 14”.

a) Branch pipe total length shall be 1500 mm & shall be provided at upstream & downstream of orifice assembly to make suitable tapings (Refer DWG -3).
b) Branch pipe material - same as flange material.
c) Branch pipe thickness/schedule - As per respective material code.
d) Branch pipe end connections - butt weld suitable for given pipe thickness/schedule.

5.4.4 Taps:

a) Number of tapings – 3 pairs (6 No’s).
b) Each Tap size - ½” NPT (F).
c) Tap location :
   1) For assembly sizes up to 14” size – corner taps on flange.
   2) For assembly sizes above 14” size – D-D/2 taps on branch pipe.
d) Taps orientation – To be decided by vendor considering clearances for flange holes, minimum gap maintained shall be 45° apart.
e) Adapters for taps (Only for 14” & above assemblies) :
   1) Number of adapters – 6 No’s per each assembly.
   2) Material of construction - same as flange/branch pipe material.
f) Plugs for taps :
   1) Number of plugs – 6 No’s for each assembly.
   2) Material of construction - same as flange/branch pipe material.
   3) To be assembled with main equipments.

5.4.5 Root valve: shall be supplied for all flow orifice as per below requirements

a) Type of valve – Globe type, forged body with leakage class- IV as a minimum.

b) Size of the valve – ½" NB
c) No. of valves –
(1) For services rated up to 300 # – 6 No's
(2) For services rated 600 # & above – 12 No's
d) Material of construction –Body material shall be same as flange/branch pipe material with SS 316 internals.
e) Rating & End connection –
(1) For services rated up to 600 # – 800#, SW as per B16.11.
(2) For services rated above 600# – 2500#, BW as per B16.25.

5.4.6 Nipples: shall be supplied for all flow orifice as per below requirements
a) Size of nipple – ½", schedule 160
a) Material of nipple – Same as Flange / branch pipe material.
b) No. of nipples –
1) For services rated up to 300 # – 6 No's (NPT x PLAIN)
[Length: 200mm for 3 No's & 100mm for rest 3 No's]
2) For services rated 600 # & above – 12 No's (6 no's – NPT x PLAIN, 6 no's- PLAIN x PLAIN)
[Length: 200mm for 6 No's & 100mm for rest 6 No's]

5.4.7 Flange Stud, Bolts & Nuts:
a) Material for Stud & Bolts shall be A193 Gr. B7 as min.
b) Material for nuts shall be A194 Gr. 2H as min.
c) Material for Jack Bolts shall be A193 Gr. B7 as min.

5.4.8 Gasket between flanges:
a) For all services rated up to 600# – spiral wound SS + CAF filler.
b) For all services rated above 600# – soft iron.

5.4.9 Vent/ drain Holes:
It shall be provided as per service requirements.

5.4.10 IBR requirements – IBR certification shall be provided in form III C for flanges, branch pipes, root valves, nipples & carrier ring.

6.0 DOCUMENTATION

Note: All drawings/documents shall be prepared on computer and prints taken on laser printer. Drawing / document size shall be preferably limited to 'A4' size.

6.1 Information to be included with Offer:
a) Bill of material
b) Copy of BHEL specification duly stamped & signed by vendor as a total compliance.
c) Technical catalogue.
d) Deviation list, if any (to mention nil – if not applicable).

6.2 Documentation submission within 2 weeks of placement of LOI for approval by BHEL (3 sets).
a) Bill of material
b) Dimensional drawings of Flow Orifice and accessories (shall be submitted as per "drawing format" enclosed in this specification).
c) Filled – up technical data sheets for individual Flow orifice.
d) Flow orifice sizing calculation
e) Flow VS DP curve
f) Comprehensive Quality Assurance plan.

6.3 Documents to be submitted during final shop testing & before equipment dispatch. (8 sets + 2 CD ROM)

COPYRIGHT AND CONFIDENTIAL
The information on this document is the property of BHARAT HEAVY ELECTRICALS LIMITED .
It must not be used directly or indirectly in any way detrimental to the interest of the company.

COPYRIGHT AND CONFIDENTIAL
The information on this document is the property of BHARAT HEAVY ELECTRICALS LIMITED .
It must not be used directly or indirectly in any way detrimental to the interest of the company.

(Note: 2 sets to be included with item dispatch and balance to BHEL purchase department and submission of these documents is commercially linked)

a) All documents approved by BHEL.
b) Complete O&M manual - 2 sets to be included with item dispatch and balance to BHEL purchase department).
c) Material test certificates. In case of pipes made from plates, Test certificates as per pipe standard ANSI B36.10 shall be submitted with plate material.
d) Inspection report.
e) Warrantee and all test certificates.
All documents shall be addressed to BHEL- Purchase section.

7.0 INSPECTION AND TESTING

7.1 Flow orifice assembly and accessories shall be subjected to inspection and testing at vendor works by BHEL/Third party Inspector (TPI) and /or BHEL's customer. Test procedure shall include but not be limited to the following. All the tests being conducted shall clearly bring out in the Quality Assurance Plan (QAP) by Vendor.

a)	Dimensional check, correctness of marking between branch pipe & flange	:	100% witness
b)	BOM Verification & visual check	:	100% witness
c)	Material test (physical properties and chemical test) Test certificate for pipes made from plates as per pipe standard ANSI B36.10 shall be submitted with plate material	:	100%, Certificate review
d)	Radiography for butt weld joints.	:	100%, certificate review
e)	PMI test for stainless steel & Alloy steel Material (For root valve body, nipples, Flange, Orifice plate, Branch Pipe and carrier ring.	:	100%, certificate review
f)	IBR certificate in Form IIIC	:	100%, certificate review
g)	Hydrostatic test at 1.5 times of max Design pressure for branch pipe assemblies.	:	100%, certificate review
h)	Workmanship, finish, punching, markings.	:	100%, witness
i)	Dye penetration test for fillet welding, weldneck joint.		100%, certificate review
j)	Root valve leakage class test	:	100%, certificate review

7.2 Test procedures:

a) Chemical analysis test for raw material:
Raw material used shall be analyzed chemically from reputed metal laboratory. Acceptable norms for material composition shall be as per ASTM.

b) Mechanical properties test for raw material:
Raw material used shall be tested for its mechanical properties in reputed metal laboratory. Acceptable norms shall be as per ASTM.

c) Radiography Test
Two shots shall be taken for each area to be radiographed, as a minimum.

d) Dimensional check up
Dimensional checkup shall be carried out as per approved drawing. Results shall be recorded in the form of test certificates.

e) PMI Test
For Stainless steel & alloy steel material, 100 percent Positive Material Identification (PMI) test shall be perform according to ASTM-E1916 and API practice 578 using either "Portable X-ray fluorescence" or "Optical Emission" type instrument. This shall be applicable for element, flanges, nipples & root valves.

f) The assembly shall be thoroughly cleaned mechanically by blast cleaning .No burrs, oil, chips, undercuts etc. shall remain before painting.

g) Painting requirement is as follows: Prime coat –epoxy based-50 microns-Dry Film Thickness [DFT] & Final coat–epoxy based –100 micron.

8.0 PACKING & DISPATCH

8.1 The equipment shall be transported to site by the vendor in fully assembled condition.

8.2 However, in case some components are liable to be damaged during transit, the same shall be dismantled and supplied separately.

8.3 Each item shall be suitably wrapped in polythene sheets, packed in wooden crates, etc properly tagged and secured before dispatch.

8.4 The vendor shall send each consignment to site with a detailed packing list.

8.5 In case of imported/exported items, seaworthy packing shall be done as per specification no: AA0490004 (latest revision) and the type of packing applicable for flow orifice is "CQ".HY0490573 (latest revision). This specification shall be obtained by vendor on request.

9.0 MARKING

Following method shall be adopted for marking:

a) Following shall be punched on each flange/branch pipe body:
- Size,
- pressure class,
- material of construction,
- Tag no &
- flow direction

b) Following shall be punched on Orifice body:
- material of construction,
- Tag no
- d (mm)
- β

c) Following shall be marked & wired to assembly :
- Part no (as given in P.O. copy) or site identification no (To be collected by vendor during sizing sheet approval)
- Tag no (To be collected by vendor during sizing sheet approval)
- Material code (as given in P.O. copy)

10.0 WARANTY

Vendor shall furnish a full warranty for the performance of the Flow orifice. Unless noted otherwise in the BHEL Tender enquiry, this warranty shall be applicable for a period of 2 years from the date of dispatch or 18 months from the date of commissioning whichever is earlier.

COPYRIGHT AND CONFIDENTIAL
The information on this document is the property of BHARAT HEAVY ELECTRICALS LIMITED .
It must not be used directly or indirectly in any way detrimental to the interest of the company.

11.0 PRICE FORMAT

S. No.	Material code	Material Description	Unit Rate (In INR)	Qty [No's]	Total Price
1.	As per enquiry	Flow Orifice……Size…. (as per enquiry)	Unit rate inclusive of all accessories.		
2.					
3.					
4.					

11.1 Bidder shall submit the price offer in the above format for the enquiry. No other format will be entertained.

11.2 Duly signed & stamped copy of un-priced price schedule format shall be submitted by vendor in the technical offer as a token of concurrence that the price offer would be submitted in this format.

11.3 Vendor shall fill up prices of various items and submit to BHEL in separate sealed cover. All prices shall be submitted as ex works. Applicable taxes and duties shall be indicated separately in commercial offer.

11.4 For Addition/Reduction of quantity, quoted unit rates shall be valid upto execution of the contract.

COPYRIGHT AND CONFIDENTIAL
The information on this document is the property of BHARAT HEAVY ELECTRICALS LIMITED .
It must not be used directly or indirectly in any way detrimental to the interest of the company.

COPYRIGHT AND CONFIDENTIAL
The information on this document is the property of BHARAT HEAVY ELECTRICALS LIMITED .
It must not be used directly or indirectly in any way detrimental to the interest of the company.

DWG-1 : FLOW ORIFICE WITHOUT BRANCH PIPE (WNRF Flange)

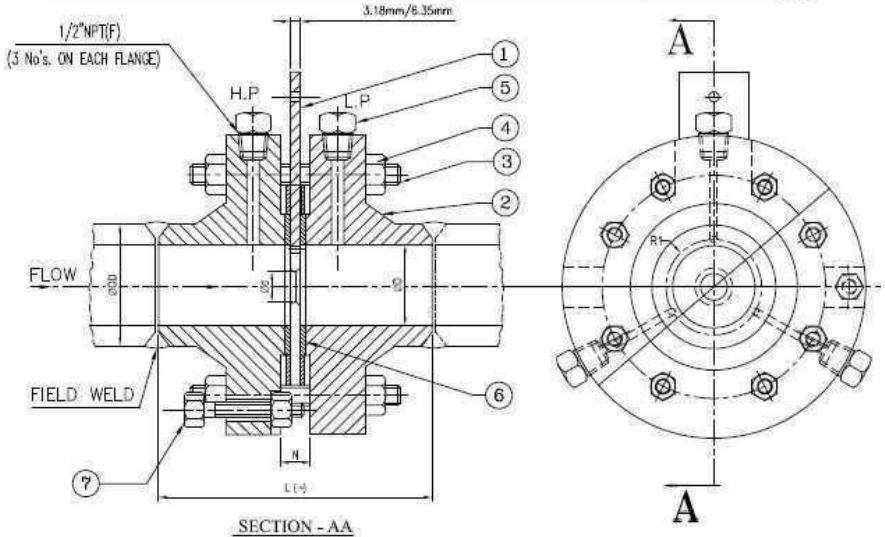

PART NO	DESCRIPTION	MATERIAL
1	Orifice plate	SS 316
2	Flange (Weld Neck)	As per enquiry
3	Stud	A 193Gr. B7
4	Nut	A 194Gr. 2H
5	Plug	As per flange matl.
6	Gasket (4.5mm THK)	SS-316 SP.WIND+CAF
7	Jack bolt with nut	ASTM A 182 F316

DWG-2 : FLOW ORIFICE WITHOUT BRANCH PIPE (WNRJ Flange)

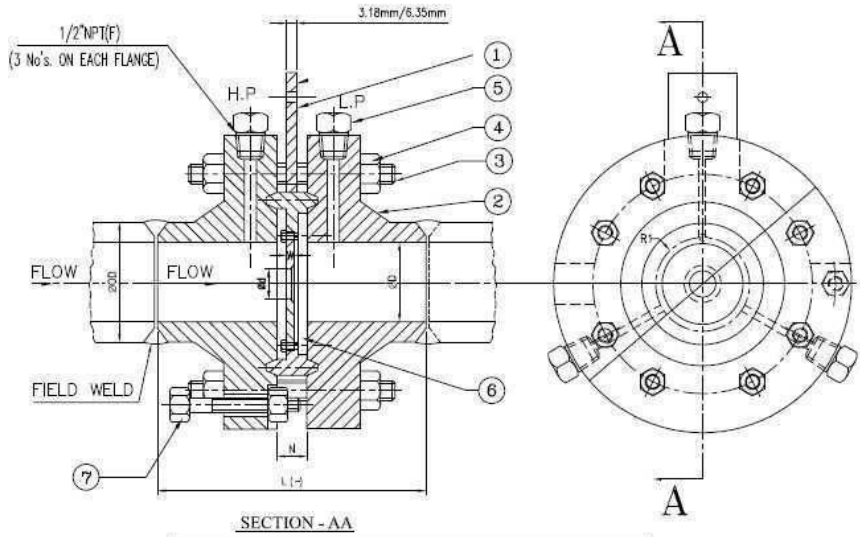

PART NO	DESCRIPTION	MATERIAL
1	Orifice plate	SS 316
2	Flange (Weld Neck)	As per enquiry
3	Stud	A 193Gr. B7
4	Nut	A 194Gr. 2H
5	Plug	As per flange matl.
6	Gasket (4.5mm THK)	SS-316 SP.WIND+CAF
7	Jack bolt with nut	ASTM A 182 F316

COPYRIGHT AND CONFIDENTIAL

The information on this document is the property of BHARAT HEAVY ELECTRICALS LIMITED .
It must not be used directly or indirectly in any way detrimental to the interest of the company.

DWG-3 : FLOW ORIFICE WITH BRANCH PIPE

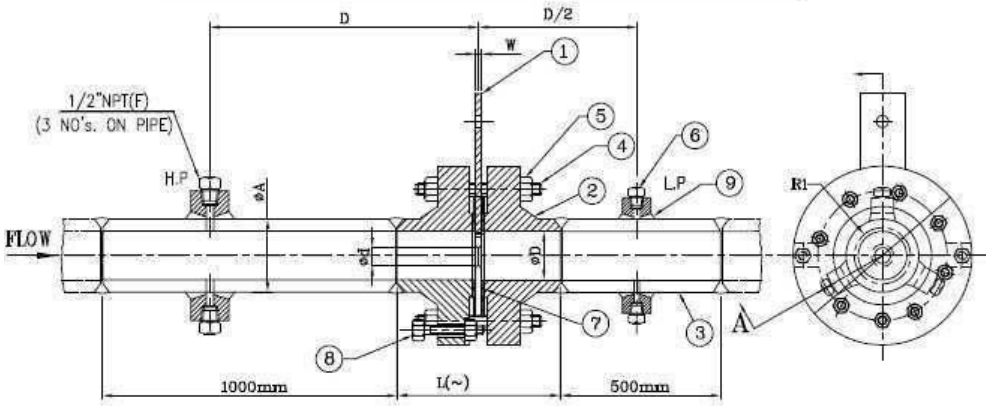

PART NO	DESCRIPTION	MATERIAL
1	Orifice	SS 316
2	Flange (Weld Neck)	As per enquiry.
3	Branch pipe	Same as flange matl.
4	Stud	A 193Gr. B7
5	Nut	A 194Gr. 2H
6	Plug	Same as flange matl.
7	Gasket (4.5mm THK)	SS-316 SP.WIND+CAF
8	Jack bolt with nut	ASTM A 182 F316
9	Adaptor	Same as flange matl.

COPYRIGHT AND CONFIDENTIAL
The information on this document is the property of BHARAT HEAVY ELECTRICALS LIMITED .
It must not be used directly or indirectly in any way detrimental to the interest of the company.

VARIANT TABLE-1

a) Flange Material : Carbon Steel - ASTM A 105

b) 1.5m Branch pipe : (1) Requirement- As per variant table
(2) Branch pipe thickness – as per variant table ± 10% variation (final thickness shall be finalized during order execution)

c) Beta (d/D) : As per ISO5167

d) dp at full scale : In the range of 2500mmWC, 5000mmWC, 7500mmWC etc

Orifice Size (in inch)	Flange Rating: 300# RF			Flange Rating: 600# RF			Flange Rating: 1500# RTJ		
	Var No	New Material Code / Old Material Code	Branch pipe Thickness (mm)	Var No	New Material Code / Old Material Code	Branch pipe Thickness (mm)	Var No	New Material Code / Old Material Code	Branch pipe Thickness (mm)
1"	00	PY9756026006 / GT9758061003	No/4.55	15	PY9756026154 / GT9758061151	No/4.55	30	PY9756026308 / GT9758061305	No/6.35
1.5"	01	PY9756026014 / GT9758061011	No/5.08	16	PY9756026162 / GT9758061160	No/5.08	31	PY9756026316 / GT9758061313	No/10.15
2"	02	PY9756026022 / GT9758061020	No/3.91	17	PY9756026170 / GT9758061178	No/5.54	32	PY9756026324 / GT9758061321	No/11.07
3"	03	PY9756026030 / GT9758061038	No/5.49	18	PY9756026189 / GT9758061186	No/7.62	33	PY9756026332 / GT9758061330	No/15.24
4"	04	PY9756026049 / GT9758061046	No/6.02	19	PY9756026197 / GT9758061194	No/8.56	34	PY9756026340 / GT9758061348	No/17.12
6"	05	PY9756026057 / GT9758061054	No/7.11	20	PY9756026200 / GT9758061208	No/10.97	35	PY9756026359 / GT9758061356	No/21.95
8"	06	PY9756026065 / GT9758061062	No/8.18	21	PY9756026219 / GT9758061216	No/12.70	36	PY9756026367 / GT9758061364	No/27.00
10"	07	PY9756026073 / GT9758061070	No/9.27	22	PY9756026227 / GT9758061224	No/15.09	37	PY9756026375 / GT9758061372	No/33.00
12"	08	PY9756026081 / GT9758061089	No/10.31	23	PY9756026235 / GT9758061232	No/17.48	38	PY9756026383 / GT9758061380	No/39.00
14"	09	PY9756026090 / GT9758061097	No/11.13	24	PY9756026243 / GT9758061240	No/19.05	39	PY9756026391 / GT9758061399	No/43.00
16"	10	PY9756026103 / GT9758061100	Yes/12.7	25	PY9756026251 / GT9758061259	Yes/21.44	40	PY9756026405 / GT9758061402	Yes/43.00
18"	11	PY9756026111 / GT9758061119	Yes/14.27	26	PY9756026260 / GT9758061267	Yes/23.83	41	PY9756026413 / GT9758061410	Yes/48.00
20"	12	PY9756026120 / GT9758061127	Yes/15.09	27	PY9756026278 / GT9758061275	Yes/26.19	42	PY9756026421 / GT9758061429	Yes/53.00
22"	13	PY9756026138 / GT9758061135	Yes/17.48	28	PY9756026286 / GT9758061283	Yes/28.58	43	PY9756026430 / GT9758061437	Yes/58.00
24"	14	PY9756026146 / GT9758061143	Yes/17.48	29	PY9756026294 / GT9758061291	Yes/30.96	44	PY9756026448 / GT9758061445	Yes/63.00

No -> Branch pipe <u>not</u> required
Yes -> Branch pipe required

COPYRIGHT AND CONFIDENTIAL
The information on this document is the property of BHARAT HEAVY ELECTRICALS LIMITED .
It must not be used directly or indirectly in any way detrimental to the interest of the company.

VARIANT TABLE-2

a) Flange Material : Stainless Steel – ASTM A 182 F 304

b) 1.5m Branch pipe :
(1) Required for 16" & above sizes
(2) Branch pipe thickness – as per variant table ± 10% variation (will be finalized during order execution)

c) Beta (d/D) : As per ISO 5167

d) dp at full scale : In the range of 2500mmWC, 5000mmWC, 7500mmWC etc

Orifice Size (in inch)	Flange Rating: 300# RF		
	Var No	New Material Code / Old Material Code	Branch pipe Thickness (mm)
1"	45	PY9756026456 / GT9758061453	No/3.38
1.5"	51	PY9756026510 / GT9758061518	No/3.68
2"	52	PY9756026529 / GT9758061526	No/3.91
3"	53	PY9756026537 / GT9758061534	No/5.49
4"	54	PY9756026545 / GT9758061542	No/6.02
6"	55	PY9756026553 / GT9758061550	No/7.11
8"	56	PY9756026561 / GT9758061569	No/8.18
10"	57	PY9756026570 / GT9758061577	No/9.27
12"	58	PY9756026588 / GT9758061585	No/12.70
14"	59	PY9756026596 / GT9758061593	No/12.70
16"	60	PY9756026600 / GT9758061607	Yes/12.70
18"	61	PY9756026618 / GT9758061615	Yes/14.00
20"	62	PY9756026626 / GT9758061623	Yes/15.00
22''	63	PY9756026634 / GT9758061631	Yes/17.00
24"	64	PY9756026642 / GT9758061640	Yes/18.00

No -> Branch pipe <u>not</u> required
Yes -> Branch pipe required

DEVIATION FORMAT

Enquiry No.:

Item:

Name of Bidder:

Offer Ref. No.:

Sl. No.	Clause no. & Spec. no.	Description as per Specification	Deviation taken	Nature of Deviation	Remarks

NOTES:

1. Technical offer of the bidder will be evaluated only on the basis of Deviation Schedule. Deviation Schedule constitutes this sheet (with these Notes) duly signed and stamped.
2. Deviations, if any, shall be clearly brought out only in this format. Deviations mentioned / taken elsewhere or in any other format will be ignored.
3. Additional sheets in the same format can be attached by the vendor, if necessary.
4. Nature of Deviations shall only be of Design / Manufacturing constraints and non-availability of items / components / makes in market.
5. No price implications shall be entertained for deviations withdrawn during the technical scrutiny. If any deviations are accepted by BHEL during technical scrutiny then also there will be no price implication. Hence, in no case there will be consideration of Price implications.
6. Reasons for the deviations shall be specified in the Remarks column.
7. If there are no deviations from the specifications, bidder still has to submit the Deviation Schedule by writing "NO Deviations" in this format.
8. If the "Deviation Schedule" is not submitted along with the offer, the bidder's offer is likely to be rejected without any further interaction with the bidder.
9. Only the accepted deviations in conjunction with the original tender shall constitute the contract document for the award of job to the bidder.

SIGNATURE
OF BIDDER _____

NAME _____

DESIGNATION _____

DATE _____

COMPANY SEAL

COPYRIGHT AND CONFIDENTIAL
The information on this document is the property of BHARAT HEAVY ELECTRICALS LIMITED .
It must not be used directly or indirectly in any way detrimental to the interest of the company.

Ref. Doc

COPYRIGHT AND CONFIDENTIAL
The information on this document is the property of BHARAT HEAVY ELECTRICALS LIMITED .
It must not be used directly or indirectly in any way detrimental to the interest of the company.

Form No.

HYDERABAD

PROJECT ENGINEERING & SYSTEMS DIVISION
HYDERABAD

PRODUCT STANDARD

PY 56026

Rev No. 02

DRAWING FORMAT:

SPACE FOR NOZZLE GA DARWING

SPACE FOR NOTES

TABLE-3 (BILL OF MATERIAL)

PART NO.	DESCRIPTION	QTY PER ASSEMBLY	MATERIAL	REF. DRG. NO./STD.

TABLE-2 (SIZING & TEST SCH.)

TAG NO.	SERVICE	METER MAX.	MAXIMUM PRESSURE(g)	MAX. TEMP.	HYDRO. TEST PRESS.(g)	NOS. OF TAPPING ←3 PAIRS→	TAPPING ORIENTATION 0°, 120° & 240° AT VERTICAL PLANE	UP STREAM MIN. STRAIGHT LENGTH OF PIPE	DOWN STREAM MIN. STRAIGHT LENGTH OF PIPE	BHEL SORT STRING NO.

NOTE-1 : FLOW VS DP CURVE – AS PER ENCLOSED DRAWING.

TABLE-1 (DIMENSIONS DETAILS)

TAG NO.	SIZE (NPS)	FLANGE STD. & RATING	QTY. (SET)	ØD	ØD	ØA	ØO	QA1	$P^{\pm 1.0}$	L(~)	C1	WEIGHT (KGs)	REMARKS

TITLE BLOCK

RECORD OF REVISIONS

Rev. No.	Date	Revision Details	Revised By	Approved By
00	08-05-13	Original issue	----------	Vani.B (Sd/-)
01	15-11-14	Thickness of branch pipe changed for variant no-38, 39, 40, 44, 41, Deviation format added.	Sonalika (Sd/-)	Sekhar (Sd/-)
02	23-05-15	Cl. 5.4.5.e.(2) & Cl. 11 are revised	Sujatha	Kamal

COPYRIGHT AND CONFIDENTIAL
The information on this document is the property of BHARAT HEAVY ELECTRICALS LIMITED,
It must not be used directly or indirectly in any way detrimental to the interest of the company.

COPYRIGHT AND CONFIDENTIAL
The information on this document is the property of BHARAT HEAVY ELECTRICALS LIMITED,
It must not be used directly or indirectly in any way detrimental to the interest of the company.

Specification for Steam & Water Analysis System [SWAS]

1. SCOPE

This technical specification covers the Design, Engineering, Manufacturing, Assembly, testing at vendor works, inspection by purchaser, packing and transportation to site with necessary documentation like data sheets, statutory approvals, O&M manuals etc., and supervision of erection & complete commissioning assistance as required for SWAS analyzer system and its sample handling system.

2. SCOPE of SUPPLY – As per enquiry

3. Proven Track Record

The items being offered as per specification should be operating satisfactorily in captive power plant applications / hydrocarbon industries like Refinery, Petrochemical and gas processing plants under similar process conditions for at least 4000 Hours. The above criteria shall be applicable to main equipment, sub- components as well as bought out items if any.

Vendor shall submit necessary supporting documents / past users confirmation supporting to above PTR requirements along with technical offer.

If offered instruments / equipments are supplied to BHEL PE&SD within last 5 years, above PTR clause is not applicable.

4. INSTRUCTIONS TO BIDDERS

4.1 Bidders are advised to contact BHEL for essential technical queries in writing within one week of issue of Enquiry. Offers with incomplete information will not be considered for evaluation, and are likely to be rejected outright without any further interaction with the Bidder.

4.2 Any technical features [over & above BHEL enquiry specification requirements] proposed by Bidder will not be given preference for the purpose of evaluation.

4.3 In the event of any conflict between these specifications, data sheets, related standards, codes etc. the vendor shall refer the matter to the purchaser for clarifications and only after obtaining the same shall proceed with the manufacture of the items in question.

5. SWAS system shall be designed as per ASME PTC 19.11.5 (2008)

6. **SWAS System Price format shall be as per Annexure-1 of this specification.** Vendor shall submit the price offer in this format and no other format will be acceptable.

COPYRIGHT AND CONFIDENTIAL
The information on this document is the property of BHARAT HEAVY ELECTRICALS LIMITED .
It must not be used directly or indirectly in any way detrimental to the interest of the company.

7. CHECK LIST (To be filled by BIDDER and submitted along with Technical offer)

Vendor shall submit the following documents mandatorily as part of COMPLTE technical offer.

Enquiry No. / Date :

Name of the Bidder :

Project Name :

Item Description :

S. No	Document	Supplier confirmation (Yes/No)	Remarks
1	Technical offer complies with the specifications in Toto and there are no technical deviations		
2	In case of deviation, vendor to confirm that these are technically not feasible deviations and same are submitted in **BHEL format.** In case technically feasible deviations are proposed by the bidder and subsequently withdrawn, no commercial implications can be claimed by the bidder		
3	All items are manufactured confirming to latest version of material grade standard and manufacturing standard mentioned in this specifications		
4	Material packing is confirmed as per cl. 17 of this specification		
5	Inspection & testing requirements are complied as per cl. 12 of this specifications		
6	**Unpriced Price schedule as per BHEL price format** is submitted		
7	For addition/reduction of quantity, unit rate quoted in the present offer shall be considered during ordering and shall be valid up to execution of the contract to the extent of ± 10% of order Value.		

(Bidder's Signature and stamp with date)

COPYRIGHT AND CONFIDENTIAL
The information on this document is the property of BHARAT HEAVY ELECTRICALS LIMITED .
It must not be used directly or indirectly in any way detrimental to the interest of the company.

Ref. Doc

8. TECHNICAL SPECIFICATIONS - SWAS system shall consists of

8.1 Analyzer transmitters mounted in Dry panels [refer Technical data sheets mentioned elsewhere in the specification]

8.2 Sample handling system with sensors mounted in wet racks [refer Technical data sheets mentioned elsewhere in the specification]

8.3 Scope matrix shall be as per below:

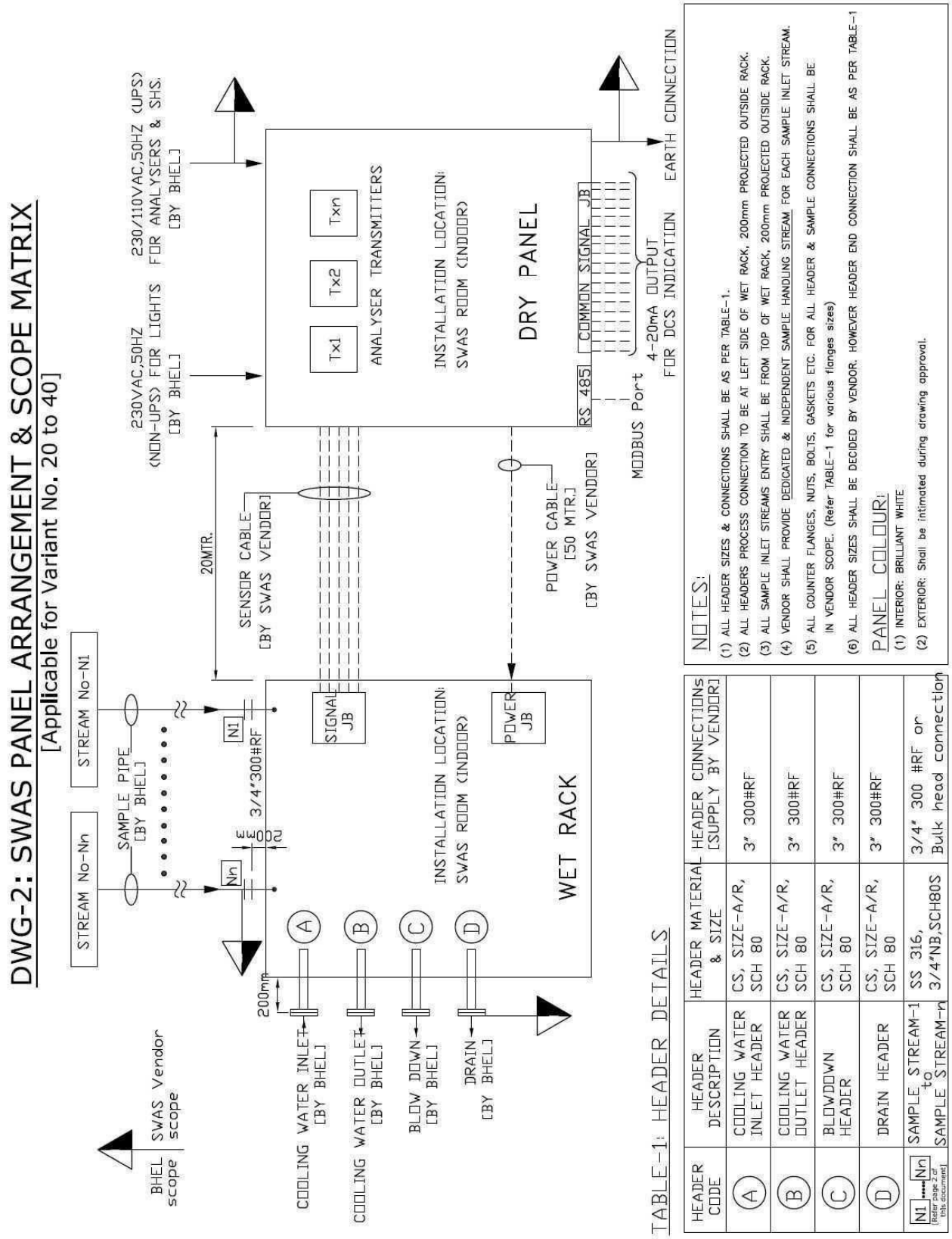

TABLE-1: HEADER DETAILS

HEADER CODE	HEADER DESCRIPTION	HEADER MATERIAL & SIZE	HEADER CONNECTIONS [SUPPLY BY VENDOR]
A	COOLING WATER INLET HEADER	CS, SIZE-A/R, SCH 80	3" 300#RF
B	COOLING WATER OUTLET HEADER	CS, SIZE-A/R, SCH 80	3" 300#RF
C	BLOWDOWN HEADER	CS, SIZE-A/R, SCH 80	3" 300#RF
D	DRAIN HEADER	CS, SIZE-A/R, SCH 80	3" 300#RF
N1 ---- Nn [Refer page 2 of this document]	SAMPLE STREAM-1 to SAMPLE STREAM-n	SS 316, 3/4"NB,SCH80S	3/4" 300 #RF or Bulk head connection

COPYRIGHT AND CONFIDENTIAL
The information on this document is the property of BHARAT HEAVY ELECTRICALS LIMITED .
It must not be used directly or indirectly in any way detrimental to the interest of the company.

9. SHELF LIFE ITEMs / CONSUMABLEs for ONE YEAR Operation

9.1 Shelf life items, Loose supply items, Commissioning spares consumables required for SWAS system 1 year operation shall be included in scope of supply along with main system.

9.2 Shelf-life items like pH sensor, reagents, electrolytes etc, shall NOT be supplied along with SWAS system supply.

9.3 Vendor service engineer shall hand carry these shelf life items during system commissioning without any time and cost implication.

9.4 **Post-Commissioning of the System, vendor shall replace all shelf life items two times at site without any time and cost implications.**

9.5 Any shelf life item replaced shall at least work for 6 months from the date of replacement. If any problem arises during this period then vendor shall replace them without any time and cost implications.

9.6 Following are list of minimum consumables to be offered along with offer. Quantity shall be suitable for all offered / quoted analyzers. Typical replenishment / calibration cycle shall be minimum 180 days or as per OEM recommendations, whichever is higher

a) pH buffer solutions for two stable pH values
b) Cat-ion Conductivity standard calibration solution / tablets
c) Degassed Conductivity standard calibration solution / tablets
d) Specific Conductivity standard calibration solution / tablets
e) Chemical reagent & electrolyte for silica analyzer
f) Calibration solution for silica analyzer
g) Chemical reagent & electrolyte for sodium analyzer
h) Calibration solution for sodium analyzer
i) Chemical reagent & electrolyte for TOC analyzer
j) Calibration solution for TOC analyzer
k) Carrier Gas cylinder with brass pressure regulator for TOC analyzers
l) Calibration solution for ORP analyzer
m) Do2 analyzer electrolyte
n) Do2 analyzer membrane kit
o) Membrane kits / filters/ resins/ refill packs for any analyzers as required
p) Any other item required by Vendor as per OEMs recommendations and based on their experience in similar system

9.7 Vendor shall furnish complete and detailed list with quantity and part number etc., in the technical offer. In case particular consumable item found to be essential for smooth functioning of the analyzer but not included in the vendor offer / BOM, such items shall be supplied by vendor on "as required" basis without any time and cost implications.

9.8 Wherever, consumable shelf life is less than 1 year, the vendor shall make partial shipment of such material at appropriate time.

10. POWER SUPPLY

Following power supplies shall be provided by purchaser as single point of panel inlet. Further conditioning & distribution through MCBs and accessories (like cable glands, plugs, etc.) required for termination of power cables in panel shall be in vendor scope:

a) **UPS supply For analyzers, SOVs & Instrument supply**: 90 – 240V AC ± 10%, 1-phase, 50 Hz– 1 No feeder
b) **Normal power supply [non-UPS] for panel lighting**: 240V AC ± 10%, 1-phase, 50 Hz - 1 No feeder

11. DESIGN VARIABLES TO BE FINALISED DURING DOCUMENT/DRG APPROVAL

Following variables to be finalized during drawing approval and vendor shall comply the same without any commercial implication:

a)	UPS supply For analyzers, SOVs & Instrument supply	:	110 V AC or 230 V AC, single phase
b)	SOV operating voltage	:	110 V AC or 230 V AC or 24 V DC or 110V DC or 220V DC
c)	Sample Process Parameters	:	Actual parameters within the range indicated in variant table. (System shall be quoted for maximum process conditions indicated in variant Tables)
d)	Cable entry	:	From panel Bottom (or) Top
e)	Panel Color	:	To be intimated during drawing approval

12. INSPECTION & TESTING

Test procedure shall include but not be limited to the following. All the tests being conducted shall clearly bring out in the Quality Assurance Plan (QAP) by Vendor.

a)	Dimensional and Material test [physical properties & chemical test]	:	100 % Review
b)	BOM verification	:	100 % Witness
c)	Calibration & Accuracy test of all analyzers & instruments	:	100 % Witness

d)	Hydrostatic tests & leakage tests of sampling system	:	100 % Review
e)	Functional test for Analyzer transmitter [Power on, display configuration, etc.]	:	100 % Witness
f)	Neatness of tubing & cable laying, clamping, dimensional checks of the panel and its components	:	100 % Witness
g)	Panel visual inspection, wiring & continuity test, HV & IR test, BOM & functional test	:	100 % Witness
h)	SOV leakage test, Coil insulation test, Cv test	:	Certificate Review
i)	Weather proof certification	:	Certificate Review
j)	Pressure gauge, temperature gauge, temperature switch – calibration, accuracy, material test & hydrotest [1.5 times of max. pressure]	:	Certificate Review

13. SUPERVISION OF ERECTION & COMMISSIONING

13.1 Vendor shall provide supervision of Erection & commissioning services as per "SWAS System Price format [Annexure-1]".

13.2 If it is in vendor scope, following shall be the scope of work:

a) Vendor shall include the supervision of erection & commissioning on lump sum basis (per man day rates are not acceptable).

b) E&C charges shall include the travel to & fro travel from vendors work to site, lodging, boarding & local travel. Vendors shall arrange their own lodging, boarding & traveling.

c) Vendors shall arrange their own Test equipments, commissioning tools, manpower etc as required.

13.3 **Supervision of Erection & Commissioning services shall be ordered by BHEL Site at the time of commissioning**. However vendor shall submit the price offer for services as per "SWAS System Price format [Annexure-1]" and same shall be considered for L1 evaluation.

14. MANDATORY SPARES - Spares requirement shall be as per enquiry.

15. DOCUMENTATION

15.1 **Information** to be included with offer

Vendor shall make the offer in detail, with respect to every item of the Purchaser's specifications. Any offer not conforming to this shall be summarily rejected.

a) Bill of materials
b) Scheme showing the details of sample extraction, sample conditioning and analyzer system clearly indicating Vendor's scope of supply
c) Data sheets of each analyzer & other key accessories
d) List of Indigenous & imported material
e) Signed and stamped copy of enquiry technical specification,
f) Proven Track record and reference list
g) Technical catalogues.
h) Filled "No Deviation "format (enclosed in this specification) duly signed and stamped.

15.2 Documentation submission within 2 weeks of placement of LOI (for approval by BHEL and / or BHEL's customer in 4 sets)

a) Bill of materials with model numbers
b) List of Indigenous & imported material
c) Scheme showing the details of sample extraction, sample conditioning and analyzer system clearly indicating Vendor's scope of supply.
d) Data sheets of each analyzer & other key accessories.
e) Panel GA drawing (Internal & external)
f) SWAS cooler sizing and Power consumption details
g) Wiring schematic
h) Power distribution scheme
i) Detailed installation & commissioning procedure
j) Handling instructions
k) Type test , statutory certificates
l) Comprehensive Quality Assurance plan (QAP).

15.3 Documents to be submitted during final shop testing and before equipment dispatch. **(Note: submission of these documents are commercially linked)**

a) Complete O& M manual – all in 16 sets (14 sets to be included with item dispatch and balance to BHEL purchase department).
b) Approved Engg documents
c) Guarantee and all test certificates for review and acceptance by BHEL and / or BHEL's Customer
2 sets of CD-ROM – containing **O&M manual and Engineering documents** (1 set to be included with item dispatch and balance to BHEL purchase department).

COPYRIGHT AND CONFIDENTIAL
The information on this document is the property of BHARAT HEAVY ELECTRICALS LIMITED .
It must not be used directly or indirectly in any way detrimental to the interest of the company.

COPYRIGHT AND CONFIDENTIAL
The information on this document is the property of BHARAT HEAVY ELECTRICALS LIMITED .
It must not be used directly or indirectly in any way detrimental to the interest of the company.

16. NAME PLATE

Each equipment shall have a 316 SS nameplate attached firmly to it at a visible place furnishing the following information:

a) Tag number as per Purchaser's data sheet.
b) Manufacturer's name and emblem.
c) Manufacturer's model number.
d) BHEL P.O. No,

17. SHIPPING

17.1 The equipment shall be transported to site by the vendor in fully assembled condition.

17.2 However, in case some of the components are likely to be damaged during transportation, the same shall be dismantled after inspection and supplied separately duly packed, same to be reassembled at site by the vendor without any commercial implications.

17.3 Each item shall be suitably wrapped in polythene sheets, packed in wooden crates, etc properly tagged and secured before dispatch.

17.4 The vendor shall send each consignment to site with a detailed packing list.

17.5 In case of imported/exported items, seaworthy packing shall be done as per specification no: HY0490573 (latest revision). This specification shall be obtained by vendor on request.

17.6 If mandatory spare items are ordered, same shall be separately packed and clearly marked on the consignment as "Mandatory spares".

VARIANT TABLE – 1 (for Analysers)

Var No.	Material Code	Item Description	Transmitter output	Process parameters
00	PY9756144009	pH Sensor	-	As per Sample handling system
01	PY9756144017	Do2 Sensor	-	As per Sample handling system
02	PY9756144025	Specific Conductivity Sensor	-	As per Sample handling system
03	PY9756144033	Cat-ion Conductivity sensor with 1 cat-ion exchange column	-	As per Sample handling system
04	PY9756144041	Cat-ion Conductivity sensor with 2 cat-ion exchange columns + necessary switching valves [Note-1]	-	As per Sample handling system
05	PY9756144050	Degassed Cat-ion Conductivity sensor	-	As per Sample handling system
10	PY9756144106	Do2 Transmitter	4-20mA	As per Sample handling system
11	PY9756144114	Do2 Transmitter	4-20mA + HART	As per Sample handling system
12	PY9756144122	Do2 Transmitter	Foundation Field bus	As per Sample handling system
13	PY9756144130	Specific Conductivity Transmitter	4-20mA	As per Sample handling system
14	PY9756144149	Specific Conductivity Transmitter	4-20mA + HART	As per Sample handling system
15	PY9756144157	Specific Conductivity Transmitter	Foundation Field bus	As per Sample handling system
16	PY9756144165	Cat-ion Conductivity Transmitter	4-20mA	As per Sample handling system
17	PY9756144173	Cat-ion Conductivity Transmitter	4-20mA + HART	As per Sample handling system
18	PY9756144181	Cat-ion Conductivity Transmitter	Foundation Field bus	As per Sample handling system
19	PY9756144190	Degassed Cat-ion Conductivity Transmitter	4-20mA	As per Sample handling system
20	PY9756144203			
21	PY9756144211	Silica analyzer + Transmitter(Multi channel)	4-20mA	As per Sample handling system
22	PY9756144220	Silica analyzer + Transmitter(Multi channel)	Foundation Field bus	As per Sample handling system
23	PY9756144238			
24	PY9756144246	Sodium analyzer + Transmitter(Multi channel)	4-20mA	As per Sample handling system
25	PY9756144254	Sodium Analyzer + Transmitter(Multi channel)	Foundation Field bus	As per Sample handling system
26	PY9756144262	pH Transmitter	4-20mA	As per Sample handling system
27	PY9756144270	pH Transmitter	4-20mA + HART	As per Sample handling system
	PY9756144289	pH Transmitter	Foundation Field bus	As per Sample handling system
29	PY9756144297	ORP Analyzer + transmitter	4-20mA + HART	As per Sample handling system
30	PY9756144300	Eliminox analyser + transmitter	4-20mA	As per Sample handling system