inner-sheathed with heat resistant elastomeric compound, nylon cord reinforced, outer-sheathed with heat resistant, oil resistant and flame retardant heavy duty elastomeric compound conforming to IS 9968. Minimum conductor size shall be 2.5 sqmm.

4.00.00 CABLE DRUMS

(a.) Cables shall be supplied in non returnable wooden or steel drums of heavy construction. The surface of the drum and the outer most cable layer shall be covered with water proof cover. Both the ends of the cables shall be properly sealed with heat shrinkable PVC/ rubber caps secured by 'U' nails so as to eliminate ingress of water during transportation, storage and erection. Wood preservative anti-termite treatment shall be applied to the entire drum. Wooden drums shall comply with IS: 10418.

(b.) Each drum shall carry manufacturer's name, purchaser's name, address and contract number, item number and type, size and length of cable and net gross weight stenciled on both the sides of the drum. A tag containing same information shall be attached to the leading end of the cable. An arrow and suitable accompanying wording shall be marked on one end of the reel indicating the direction in which it should be rolled.

(c.) The standard drum length for control cables shall not be less than 1000 metres. The length per drum shall be subjected to a maximum tolerance of +/- 5% of the standard drum length. The Employer shall have the option of rejecting cable drums with shorter lengths.

5.00.00 TESTS

All equipments to be supplied shall be of type tested design. During detailed engineering, the contractor shall submit for Owner's approval the reports of all the type tests as listed in this specification and carried out within last ten years from the date of bid opening. These reports should be for the test conducted on the equipment similar to those proposed to be supplied under this contract and the test(s) should have been either conducted at an independent laboratory or should have been witnessed by a client.

However if the contractor is not able to submit report of the type test(s) conducted within last ten years from the date of bid opening, or in the case of type test report(s) are not found to be meeting the specification requirements, the contractor shall conduct all such tests under this contract at no additional cost to the owner either at third party lab or in presence of client /owners representative and submit the reports for approval.

All acceptance and routine tests as per the specification and relevant standards shall be carried out. Charges for these shall be deemed to be included in the equipment price

The type test reports once approved for any projects shall be treated as reference. For subsequent projects of NTPC, an endorsement sheet will be furnished by the manufacturer confirming similarity and "No design Change". Minor changes if any shall be highlighted on the endorsement sheet.

5.01.00 TYPE TESTS

5.01.01 The reports for the following type tests shall be submitted for one size of control cables. Size shall be decided by the employer during detailed engineering

S. No.	Type Test	Remarks
	For Conductor	
1.	Resistance test	
	For Armour Wires / Formed Wires (If applicable)	
2.	Measurement of Dimensions	
3.	Tensile Test	
4.	Elongation test	
5.	Torsion test	For round wire only
6.	Wrapping test	For aluminium wires / formed wires only.
7.	Resistance test	
8(a).	Mass of zinc Coating test	For GS wires/formed wires only
8(b).	Uniformity of zinc coating	For GS wires/formed wires only
9.	Adhesion test	For GS wires/formed wires only
	For PVC insulation & PVC Sheath	
10.	Test for thickness	
11.	Tensile strength and elongation test	before ageing and after ageing
12.	Ageing in air oven	
13.	Loss of mass test	For PVC insulation and sheath only
14.	Hot deformation test	For PVC insulation and sheath only
15.	Heat shock test	For PVC insulation and sheath only
16.	Shrinkage test	
17.	Thermal stability test	For PVC insulation and sheath only

S. No.	Type Test	Remarks
18.	Oxygen index test	For outer sheath only
19.	Smoke density test	For outer sheath only
20.	Acid gas generation test	For outer sheath only
	For completed cables	
21.	Insulation resistance test(Volume resistivity method)	
22.	High voltage test	
23.	Flammability test as per IEC-332 Part-3 (Category-B)	

5.02.00 Indicative list of tests/checks, Routine and Acceptance tests shall be as per Quality Assurance & Inspection table of Control Cables enclosed.

			CUSTOMER :			PROJECT TITLE			SPECIFICATION : NUMBER :			
		QUALITY PLAN	BIDDER/ VENDOR :			QUALITY PLAN NUMBER PED-506-00-Q-007, REV-03			SPECIFICATION : TITLE			
		SHEET 1 OF 9	SYSTEM			ITEM: AC ELECT. MOTORS 55 KW & ABOVE (LV & MV)			SECTION			VOLUME III
SL. NO.	COMPONENT/OPERATION	CHARACTERISTIC CHECK	CAT.	TYPE/ METHOD OF CHECK	EXTENT OF CHECK	REFERENCE DOCUMENT	ACCEPTANCE NORM	FORMAT OF RECORD	AGENCY			REMARKS
									P	**W**	**V**	
1	**2**	**3**	**4**	**5**	**6**	**7**	**8**	**9**	**10**			**11**
1.0	RAW MATERIAL & BOUGHT OUT CONTROL											
1.1	SHEET STEEL, PLATES, SECTION, EYEBOLTS	1.SURFACE CONDITION	MA	VISUAL	100%	-	FREE FROM BLINKS, CRACKS, WAVINESS ETC	LOG BOOK	3	-	-	
		2.DIMENSIONS	MA	MEASUREMENT	SAMPLE	MANFR'S DRG./SPEC	MANFR'S DRG./SPEC	-DO-	3	-	-	
		3.PROOF LOAD TEST (EYE BOLT)	MA	MECH. TEST	-DO-	-DO-	-DO-	INSPEC. REPORT	3	-	2	
1.2	HARDWARES	1.SURFACE CONDITION	MA	VISUAL	100%		FREE FROM CRACKS, UN-EVENNESS ETC.	-DO-	3	-	-	
		2.PROPERTY CLASS	MA	VISUAL	SAMPLES	MANFR'S DRG./SPEC BOOK	RELEVENT IS/SPEC.	SUPPLIERS TC & LOG	3	-	2	PROPERTY CLASS MARKING SHALL BE CHECKED BY THE VENDOR
1.3	CASTING	1.SURFACE CONDITION	MA	VISUAL	100%		FREE FROM CRACKS, BLOW HOLES ETC.	LOG BOOK	3	-	2	
		2.CHEM. & PHY. PROP.	MA	CHEM & MECH TEST	1/HEAT NO.	MANFR'S DRG./SPEC	RELEVENT IS/	SUPPLIER'S TC	3	-	2	HEAT NO. SHALL BE VERIFIED
		3.DIMENSIONS	MA	MEASUREMENT	100%	MANUFR'S DRG.	MANUFR'S DRG.	LOG BOOK	3	-	2	
1.4	PAINT & VARNISH	1.MAKE, SHADE, SHELF LIFE & TYPE	MA	VISUAL	100% CONTINUOUS	MANFR'S DRG./SPEC	MANFR'S DRG./SPEC	LOG BOOK	3	-	2	

BHEL	**PARTICULARS**	**BIDDER/VENDOR**
	NAME	
	SIGNATURE	
	DATE	BIDDER'S/VENDORS COMPANY SEAL

			CUSTOMER :			PROJECT TITLE			SPECIFICATION : NUMBER :			
		QUALITY PLAN	BIDDER/ VENDOR :			QUALITY PLAN NUMBER PED-506-00-Q-007, REV-03			SPECIFICATION : TITLE			
		SHEET 2 OF 9	SYSTEM			ITEM: AC ELECT. MOTORS 55 KW & ABOVE (LV & MV)			SECTION			VOLUME III
SL. NO.	COMPONENT/OPERATION	CHARACTERISTIC CHECK	CAT.	TYPE/ METHOD OF CHECK	EXTENT OF CHECK	REFERENCE DOCUMENT	ACCEPTANCE NORM	FORMAT OF RECORD	AGENCY P	W	V	REMARKS
1	2	3	4	5	6	7	8	9	10			11
1.5	SHAFT (FORGED OR ROLLED)	1. SURFACE COND.	MA	VISUAL	100%	-	FREE FROM VISUAL DEFECTS	-DO-	3	-	-	VENDOR'S APPROVAL IDENTIFICATION SHALL BE MAINTAINED
		2. CHEM. & PHYSICAL PROPERTIES	MA	CHEM. & PHYSICAL TESTS	1/HEAT NO. OR HEAT TREATMENT BATCH NO	MFG. DRG. SPEC.	RELEVANT IS	SUPPLIER'S TC	3	-	2	
		3. DIMENSIONS	MA	MEASUREMENT	100%	-DO-	MANUFR'S DRG.	LOG BOOK	3	-	2	
		4.INTERNAL FLAWS	CR	UT	-DO-	ASTM-A388	MANUFR'S SPEC. BHEL SPEC.	-DO-	3	2	1	FOR DIA OF 55 MM & ABOVE
1.6	SPACE HEATERS, CONNEC-TORS, TERMINAL BLOCKS, CABLES, CABLE LUGS, CARBON BRUSH TEMP. DETECTORS, RTD, BTD'S	1. MAKE & RATING	MA	VISUAL	-DO-	MANUFR'S DRG. SPEC.	MANUFR'S DRG. SPEC.	-DO-	3	-	2	
		2. PHYSICAL COND.	MA	-DO-	-DO-	-	NO PHYS. DAMAGE, NO ELECTRICAL DISCONTINUITY	-DO-	3	-	2	
		3.DIMENSIONS (WHEREVER APPLICABLE)	MA	MEASUREMENT	SAMPLE	MANUFR'S DRG./ SPEC.	MANUFR'S DRG. / SPEC.	-DO-	3	-	2	
		4.PERFORMANCE/ CALIBRATION	MA	TEST	100%	-DO-	-DO-	INSP. REPORT	3	-	2	
BHEL			**PARTICULARS**		**BIDDER/VENDOR**							
			NAME									
			SIGNATURE									
			DATE						BIDDER'S/VENDORS COMPANY SEAL			

			CUSTOMER :			PROJECT TITLE			SPECIFICATION : NUMBER :			
		QUALITY PLAN	BIDDER/ VENDOR :			QUALITY PLAN NUMBER PED-506-00-Q-007, REV-03			SPECIFICATION : TITLE			
		SHEET 3 OF 9	SYSTEM			ITEM: AC ELECT. MOTORS 55 KW & ABOVE (LV & MV)			SECTION			VOLUME III
SL. NO.	COMPONENT/OPERATION	CHARACTERISTIC CHECK	CAT.	TYPE/ METHOD OF CHECK	EXTENT OF CHECK	REFERENCE DOCUMENT	ACCEPTANCE NORM	FORMAT OF RECORD	AGENCY P	W	V	REMARKS
1	2	3	4	5	6	7	8	9	10			11
1.7	OTHER INSULATING MATERIALS LIKE SLEEVES, BINDINGS CORDS, PAPERS, PRESS BOARDS ETC.	1. SURFACE COND. ETC.	MA	VISUAL	100%	-	NO VISUAL DEFECTS	INSPT. REPORT	3	-	2	
		2. OTHER CHARACTERISTICS	MA	TEST	SAMPLE	MANUF'S SPEC.	MANUF'S SPEC.	LOG BOOK AND OR SUPPLIER'S TC	3	-	2	
1.8	SHEET STAMPING (PUNCHED)	1. SURFACE COND.	MA	VISUAL	100%	-	NO VISUAL DEFECTS (FREE FROM BURS)	LOG BOOK	3	-	-	
		2.DIMENSIONS INCLUDING BURS HEIGHT	MA	MEASUREMENT	SAMPLE	MANUFR'S DRG. .	MANUFR'S DRG.	-DO-	3	-	2	FOR MV MOTOR INSULA-TION/VARNISH THICKNESS SHALL BE MORE THAN THE BURS HEIGHT
		3. ACCEPTANCE TESTS	MA	ELECT. & MECH TESTS	-DO-	MANUF'S SPEC./ RELEVANT IS	RELEVANT IS	SUPPLIER'S TC	3	-	2	
1.9	CONDUCTORS	1. SURFACE FINISH	MA	VISUAL	100%	-	FREE FROM VISUAL DEFECTS	LOG BOOK	3*	-	2*	* MOTOR MANUFACTURER TO CONDUCT VISUAL CHECK FOR SURFACE FINISH ON RANDOM BASIS (10% SAMPLE) AT HIS WORKS AND MAINTAIN RECORD FOR VERIFICATION BY BHEL/CUSTOMER.
		2.ELECT. PROP, & MECH. PROP	MA	ELECT. & MECH.TEST	SAMPLES	RELEVANT IS/ BS OR OTHER STANDARDS	RELEVANT IS/ BS OR OTHER STANDARDS	SUPPLIERS TC & VENDOR'S INSPN. REPORTS	3	-	2	

BHEL	**PARTICULARS**	**BIDDER/VENDOR**	
	NAME		
	SIGNATURE		
	DATE		BIDDER'S/VENDORS COMPANY SEAL

			CUSTOMER :			PROJECT TITLE			SPECIFICATION : NUMBER :			
		QUALITY PLAN	BIDDER/ VENDOR :			QUALITY PLAN NUMBER PED-506-00-Q-007, REV-03			SPECIFICATION : TITLE			
		SHEET 4 OF 9	SYSTEM			ITEM: AC ELECT. MOTORS 55 KW & ABOVE (LV & MV)			SECTION			VOLUME III
SL. NO.	COMPONENT/OPERATION	CHARACTERISTIC CHECK	CAT.	TYPE/ METHOD OF CHECK	EXTENT OF CHECK	REFERENCE DOCUMENT	ACCEPTANCE NORM	FORMAT OF RECORD	AGENCY P	W	V	REMARKS
1	2	3	4	5	6	7	8	9	10			11
		3.DIMENSIONS	MA	MEASUREMENT	-DO-	-DO-	-DO-	Log Book	3	-	2	
1.10	BEARINGS	1.MAKE & TYPE	MA	VISUAL	100%	MANFR'S DRG./ APPROVED DATASHEET	MANFR'S DRG./ APPROVED DATASHEET	-DO-	3	-	2	
		2.DIMENSIONS	MA	MEASUREMENT	SAMPLE	BHEL DATA SHEET	BHEL DATA SHEET BEARING MANUF'S CATALOGUES	-DO-	3	-	2	
		3.SURFACE FINISH	MA	VISUAL	100%	-	FREE FROM VISUAL DEFECTS	-DO-	3	-	2	
1.11	SLIP RING (WHEREVER APPLICABLE)	1.SURFACE COND.	MA	VISUAL	100%	-	-DO-	-DO-	3	-	-	
		2.DIMENSIONS	MA	MEASUREMENT	SAMPLE	MANUF'S DRG	MANUF'S DRG	-DO-	3	-	-	
		3.TEMP.WITH-STAND CAPACITY	MA	ELECT.TEST	-DO-	MANUF'S SPEC./ BHEL SPEC.	MANUF'S SPEC./ BHEL SPEC.	-DO-	3	-	2	
		4.HV/IR	MA	-DO-	100%	-DO-	-DO-	-DO-	3	-	2	
1.12	OIL SEALS & GASKETS	1.MATERIAL OF GASKET	MA	VISUAL	100%	MANUF'S DRG/SPECS	MANUF'S DRG./ SPECS.	-DO-	3	-	-	
		2.SURFACE COND.	MA	VISUAL	100%	-	FREE FROM VISUAL DEFECTS	-DO-	3	-	-	
		3.DIMENSIONS	MA	MEASUREMENT	SAMPLE	MANUF'S DRG	MANUF'S DRG	-DO-	3	-	-	

BHEL	**PARTICULARS**	**BIDDER/VENDOR**	
	NAME		
	SIGNATURE		
	DATE		BIDDER'S/VENDORS COMPANY SEAL

			CUSTOMER :			PROJECT TITLE			SPECIFICATION : NUMBER :			
		QUALITY PLAN	BIDDER/ VENDOR :			QUALITY PLAN NUMBER PED-506-00-Q-007, REV-03			SPECIFICATION : TITLE			
		SHEET 5 OF 9	SYSTEM			ITEM: AC ELECT. MOTORS 55 KW & ABOVE (LV & MV)			SECTION			VOLUME III
SL. NO.	COMPONENT/OPERATION	CHARACTERISTIC CHECK	CAT.	TYPE/ METHOD OF CHECK	EXTENT OF CHECK	REFERENCE DOCUMENT	ACCEPTANCE NORM	FORMAT OF RECORD	AGENCY P	W	V	REMARKS
1	2	3	4	5	6	7	8	9	10			11
2.0	IN PROCESS											
2.1	STATOR FRAME WELDING (IN CASE OF FABRICATED STATOR)	1.WORKMANSHIP & CLEANNESS	MA	VISUAL	100%	-DO-	GOOD FINISH	LOG BOOK	3/2	2	-	
		2.DIMENSIONS	MA	MEASUREMENT	-DO-	MANUF'S DRG	MANUF'S DRG	-DO-	2	-	-	
2.2	MACHINING	1.FINISH	MA	VISUAL	100%	-DO-	GOOD FINISH	LOG BOOK	2	-	-	
		2.DIMENSIONS	MA	MEASUREMENT	-DO-	MANUF'S DRG	MANUF'S DRG	-DO-	2	-	-	
		3.SHAFT SURFACE FLOWS	MA	PT	-DO-	RELEVENT SPEC./ ASTM-E165	MANUFR'S SPEC./ BHEL SPEC./	-DO-	2	-	1	
2.3	PAINTING	1.SURFACE PREPARATION	MA	VISUAL	100%	MANFR'S SPEC/BHEL SPEC./ RELEVANT STAND	BHEL SPEC. SAME AS COL.7	LOG BOOK	2	-	-	
		2.PAINT THICKNESS (BOTH PRIMER & FINISH COAT)	MA	MEASUREMENT BY ELCOMETER	SAMPLE	-DO-	-DO-	-DO-	2	-	-	
		3.SHADE	MA	VISUAL	-DO-	-DO-	-DO-	Log Book	2	-	-	
		4.ADHESION	MA	CROSS CUTTING & TAPE TEST	-DO-	-DO-	-DO-	Log Book	2	-	-	

BHEL	**PARTICULARS**	**BIDDER/VENDOR**	
	NAME		
	SIGNATURE		
	DATE		BIDDER'S/VENDORS COMPANY SEAL

			CUSTOMER :			PROJECT TITLE			SPECIFICATION : NUMBER :			
		QUALITY PLAN	BIDDER/ VENDOR :			QUALITY PLAN NUMBER PED-506-00-Q-007, REV-03			SPECIFICATION : TITLE			
		SHEET 6 OF 9	SYSTEM			ITEM: AC ELECT. MOTORS 55 KW & ABOVE (LV & MV)			SECTION			VOLUME III
SL. NO.	COMPONENT/OPERATION	CHARACTERISTIC CHECK	CAT.	TYPE/ METHOD OF CHECK	EXTENT OF CHECK	REFERENCE DOCUMENT	ACCEPTANCE NORM	FORMAT OF RECORD	AGENCY			REMARKS
									P	**W**	**V**	
1	**2**	**3**	**4**	**5**	**6**	**7**	**8**	**9**	**10**			**11**
2.4	SHEET STACKING	1.COMPLETENESS	MA	MEASUREMENT	SAMPLE	MANUFR'S SPEC.	MANUFR'S SPEC.	Log Book	2	-	-	
		2.COMPRESSION & TIGHTENING	MA	MEASUREMENT	100%	-DO-	-DO-	Log Book	2	-	-	
		3.CORE LOSS & HOTSPOT	MA	ELECT.TEST	-DO-	-DO-	-DO-	Log Book	2	1*	1	(FOR MOTORS OF 2MW AND ABOVE) * ON 10% RANDOM SAMPLE
2.5	WINDING	1.COMPLETENESS	CR	VISUAL	100%	MANUFR'S SPEC./BHEL SPEC.	MANUFR'S SPEC./BHEL SPEC.	Log Book	2	-	-	
		2.CLEANLINESS	CR	-DO-	-DO-	-DO-	-DO-	Log Book	2	-	-	
		3.IR-HV-IR	CR	ELECT. TEST	-DO-	-DO-	-DO-	Log Book	2	-	1	
		4.RESISTANCE	CR	-DO-	-DO-	-DO-	-DO-	Log Book	2	-	1	
		5.INTERTURN INSULATION	CR	-DO-	-DO-	-DO-	-DO-	Log Book	2	-	-	
		6.SURGE WITH STAND AND TAN. DELTA TEST	CR	-DO-	-DO-	-DO-	-DO-	Log Book	2	-	1	FOR MV MOTOR
2.6	IMPREGNATION	1.VISCOSCITY	MA	PHY. TEST	AT STARTING	-DO-	-DO-	Log Book	2	-	-	
		2.TEMP. PRESSURE VACCUM	MA	PROCESS CHECK	CONTINUOUS	-DO-	-DO-	Log Book	2	-	-	
		3.NO. OF DIPS	MA	-DO-	-DO-	-DO-	-DO-	Log Book	2	-	1	THREE DIPS TO BE GIVEN

BHEL	**PARTICULARS**	**BIDDER/VENDOR**	
	NAME		
	SIGNATURE		
	DATE		BIDDER'S/VENDORS COMPANY SEAL

	QUALITY PLAN	CUSTOMER :	PROJECT TITLE	SPECIFICATION : NUMBER :
		BIDDER/ VENDOR :	QUALITY PLAN NUMBER PED-506-00-Q-007, REV-03	SPECIFICATION : TITLE
	SHEET 7 OF 9	SYSTEM	ITEM: AC ELECT. MOTORS 55 KW & ABOVE (LV & MV)	SECTION VOLUME III

SL. NO.	COMPONENT/OPERATION	CHARACTERISTIC CHECK	CAT.	TYPE/ METHOD OF CHECK	EXTENT OF CHECK	REFERENCE DOCUMENT	ACCEPTANCE NORM	FORMAT OF RECORD	AGENCY P	AGENCY W	AGENCY V	REMARKS
1	2	3	4	5	6	7	8	9	10			11
		4.DURATION	MA	-DO-	-DO-	-DO-	-DO-	Log Book	2	-	1	
2.7	COMPLETE STATOR ASSEMBLY	1.COMPACTNESS & CLEANLINESS	MA	VISUAL	100%	-DO-	-DO-	Log Book	2	-	-	
2.8	BRAZING/COMPRESSION JOINT	1.COMPLETENESS	CR	-DO-	-DO-	-DO-	-DO-	Log Book	2	-	-	
		2.SOUNDNESS	CR	MALLET TEST & UT	-DO-	-DO-	-DO-	Log Book	2		1	
		3.HV	MA	ELECT. TEST	-DO-	-DO-	-DO-	Log Book	2		1	
2.9	COMPLETE ROTOR ASSEMBLY	1.RESIDUAL UNBALANCE	CR	DYN. BALANCE	-DO-	MFG SPEC./ ISO 1940	MFG. DWG.	Log Book	2		1	VERIFICATION FOR MV MOTOR ONLY
		2.SOUNDNESS OF DIE CASTING	CR	ELECT. (GROWLER TEST)	-DO-	MFG. SPEC.	MFG. SPEC.	Log Book	2		1	
2.10	ASSEMBLY	1.ALIGNMENT	MA	MEAS.	-DO-	-DO-	-DO-	Log Book	2	-	-	
		2.WORKMANSHIP	MA	VISUAL	-DO-	-DO-	-DO-	Log Book	2	-	-	
		3.AXIAL PLAY	MA	MEAS.	-DO-	-DO-	-DO-	Log Book	2	-	1	
		4.DIMENSIONS	MA	-DO-	-DO-	MFG.DRG./ MFG SPEC.	MFG. DRG/ RELEVANT IS	Log Book	2	-	-	
		5.CORRECTNESS, COMPLETENESS TERMINATIONS/ MARKING/ COLOUR CODE	MA	VISUAL	100%	MFG SPEC. RELEVANT IS	MFG SPEC. RELEVANT IS	Log Book	2	-	-	
		6. RTD, BTD & SPACE HEATER MOUNTING.	MA	VISUAL	100%	MFG SPEC. RELEVANT IS	MFG SPEC. RELEVANT IS	Log Book	2		1	

BHEL	PARTICULARS	BIDDER/VENDOR
	NAME	
	SIGNATURE	
	DATE	BIDDER'S/VENDORS COMPANY SEAL

	QUALITY PLAN	CUSTOMER :	PROJECT TITLE	SPECIFICATION : NUMBER :
		BIDDER/ VENDOR :	QUALITY PLAN NUMBER PED-506-00-Q-007, REV-03	SPECIFICATION : TITLE
	SHEET 8 OF 9	SYSTEM	ITEM: AC ELECT. MOTORS 55 KW & ABOVE (LV & MV)	SECTION VOLUME III

SL. NO.	COMPONENT/OPERATION	CHARACTERISTIC CHECK	CAT.	TYPE/ METHOD OF CHECK	EXTENT OF CHECK	REFERENCE DOCUMENT	ACCEPTANCE NORM	FORMAT OF RECORD	AGENCY P	AGENCY W	AGENCY V	REMARKS
1	2	3	4	5	6	7	8	9	10			11
3.0	TESTS	1.TYPE TESTS INCLUDING SPECIAL TESTS AS PER BHEL SPEC.	MA	ELECT.TEST	1/TYPE/SIZE	IS-325/ BHEL SPEC./ DATA SHEET	IS-325/ BHEL SPEC./ DATA SHEET	TEST REPORT	2	1*	1	* NOTE - 1
		2.ROUTINE TESTS INCLUDING SPECIAL TEST AS PER BHEL SPEC.	MA	-DO-	100%	-DO-	-DO-	-DO-	2	1$	1	$NOTE - 2
		3.VIBRATION & NOISE LEVEL	MA	-DO-	100%	IS-12075 & IS-12065	IS-12075 & IS-12065	-DO-	2	1$	1	$NOTE - 2
		4.OVERALL DIMENSIONS AND ORIENTATION	MA	MEASUREMENT & VISUAL	100%	APPROVED DRG/DATA SHEET	APPROVED DRG/DATA SHEET & RELEVANT IS	INSPC. REPORT	2	1	-	
		5.DEGREE OF PROTECTION	MA	ELECT. & MECH. TEST	1/TYPE/ SIZE	RELEVANT IS	BHEL SPEC. AND DATA SHEET	TC	2	-	1	TC FROM AN INDEPENDENT LABORATORY, REFER NOTE-3
		6. MEASUREMENT OF RESISTANCE OF RTD & BTD	MA	-DO-	100%	-DO-	-DO-	-DO-	2	1$	1	$ NOTE - 2
		7. MEASUREMENT OF RESISTANCE, IR OF SPACE HEATER	MA	-DO-	100%	-DO-	-DO-	-DO-	2	1$	1	$ NOTE - 2
		8. NAMEPLATE DETAILS	MA	VISUAL	100%	IS-325 & DATA SHEET	IS-325 & DATA SHEET	INSPC. REPORT	2	1$	1	$ NOTE - 2
		9.EXPLOSION FLAME PROOF NESS (IF SPECIFIED)	MA	EXPLOSION FLAME PROOF TEST	1/TYPE	IS-3682 IS-8239 IS-8240	IS-3682 IS-8239 IS-8240	TC	2	-	1	TC FROM AN INDEPENDENT LABORATORY, REFER NOTE-3
		10. PAINT SHADE, THICKNESS & FINISH	MA	VISUAL & MEASUREMENT BY ELKOMETER	SAMPLE	BHEL SPEC. & DATA SHEET	BHEL SPEC. & DATA SHEET	TC	2	1$	1	SAMPLING PLAN TO BE DECIDED BY INSPECTION AGENCY $ NOTE - 2

BHEL	PARTICULARS	BIDDER/VENDOR	
	NAME		
	SIGNATURE		
	DATE		BIDDER'S/VENDORS COMPANY SEAL

		QUALITY PLAN	CUSTOMER :			PROJECT TITLE			SPECIFICATION : NUMBER :		
			BIDDER/ VENDOR :			QUALITY PLAN NUMBER PED-506-00-Q-007, REV-03			SPECIFICATION : TITLE		
		SHEET 9 OF 9	SYSTEM			ITEM: AC ELECT. MOTORS 55 KW & ABOVE (LV & MV)			SECTION		VOLUME III
SL. NO.	COMPONENT/OPERATION	CHARACTERISTIC CHECK	CAT.	TYPE/ METHOD OF CHECK	EXTENT OF CHECK	REFERENCE DOCUMENT	ACCEPTANCE NORM	FORMAT OF RECORD	AGENCY		REMARKS
									P	W	V
1	2	3	4	5	6	7	8	9	10		11

NOTES:

1 DEPENDING UPON THE SIZE AND CRITICALLY, WITNESSING BY BHEL SHALL BE DECIDED.

2 ROUTINE TESTS ON 100% MOTORS SHALL BE DONE BY THE VENDOR. HOWEVER, BHEL SHALL WITNESS ROUTINE TESTS ON RANDOM SAMPLES. THE SAMPLING PLAN SHALL BE MUTUALLY AGREED UPON.

3 IN CASE TEST CERTIFICATES FOR THESE TESTS ON SIMILAR TYPE, SIZE AND DESIGN OF MOTOR FROM INDEPENDENT LABORATORY ARE AVAILABLE, THESE TEST MAY NOT BE REPEATED.

4 WHEREVER CUSTOMER IS INVOLVED IN INSPECTION, AGENCY (1) SHALL MEAN BHEL AND CUSTOMERS BOTH TOGETHER.

Legends for Inspection agency

1. BHEL/CUSTOMER
2. VENDOR (MOTOR MANUFACTURER)
3. SUB-VENDOR (RAW MATERIAL/COMPONENTS SUPPLIER)

P. PERFORM
W. WITNESS
V. VERIFY

BHEL	PARTICULARS	BIDDER/VENDOR	
	NAME		
	SIGNATURE		
	DATE		BIDDER'S/VENDORS COMPANY SEAL

			CUSTOMER :			PROJECT TITLE			SPECIFICATION : NUMBER :			
		QUALITY PLAN	BIDDER/ VENDOR :			QUALITY PLAN NUMBER PED-506-00-Q-006, REV-01			SPECIFICATION TITLE			
		SHEET 1 OF 2	SYSTEM			ITEM AC ELECT. MOTORS BELOW 55KW (LV)			SECTION			VOLUME III
SL. NO.	COMPONENT/OPERATION	CHARACTERISTICS CHECK	CAT.	TYPE/ METHOD OF CHECK	EXTENT OF CHECK	REFERENCE DOCUMENT	ACCEPTANCE NORM	FORMAT OF RECORD	AGENCY P	W	V	REMARKS
1	2	3	4	5	6	7	8	9	10			11
1.0	ASSEMBLY	1.WORKMANSHIP	MA	VISUAL	100%	MANUF'S SPEC	MANUF'S SPEC	-DO-	2	-	-	
		2.DIMENSIONS	MA	-DO-	-DO-	MFG. DRG./ MFG. SPEC.	MFG. DRG./ MFG. SPEC.	-DO-	2	-	-	
		3.CORRECTNESS COMPLETENESS TERMINATIONS/ MARKING/COLOUR CODE	MA	VISUAL	100%	MFG.SPEC./ RELEVANT IS	MFG.SPEC. RELEVANT IS	-DO-	2	-	-	
2.0	PAINTING	1.SHADE	MA	VISUAL	SAMPLE	MANUFR'S SPEC/BHEL SPEC./RELEVANT STANDARD	BHEL SPEC. SAME AS COL.7	LOG BOOK	2	-	-	
3.0	TESTS	1.ROUTINE TEST INCLUDING SPECIAL TEST AS PER BHEL SPEC.	MA	-DO-	100%	IS-325/ BHEL SPEC./ DATA SHEET	SAME AS COL.7	TEST REPORT	2	1		NOTE -1 & NOTE-3
		2.OVERALL DIMENSIONS & ORIENTATION	MA	MEASUREMENT & VISUAL	100%	APPROVED DRG/DATA SHEET	APPROVED DRG/DATA SHEET & RELEVANT IS	INSPN. REPORT	2	1	-	NOTE -1 & NOTE-3
	BHEL		**PARTICULARS**		**BIDDER/VENDOR**							
			NAME									
			SIGNATURE									

	QUALITY PLAN	CUSTOMER :	PROJECT TITLE	SPECIFICATION : NUMBER :
		BIDDER/ VENDOR :	QUALITY PLAN NUMBER PED-506-00-Q-006, REV-01	SPECIFICATION : TITLE :
	SHEET 2 OF 2	SYSTEM	ITEM AC ELECT. MOTORS BELOW 55KW (LV)	SECTION VOLUME III

SL. NO.	COMPONENT/OPERATION	CHARACTERISTICS CHECK	CAT.	TYPE/ METHOD OF CHECK	EXTENT OF CHECK	REFERENCE DOCUMENT	ACCEPTANCE NORM	FORMAT OF RECORD	AGENCY P	AGENCY W	AGENCY V	REMARKS
1	2	3	4	5	6	7	8	9	10	10	10	11
		3.NAMEPLATE DETAILS	MA	VISUAL	100%	IS-325 & DATA SHEET	IS-325 & DATA SHEET	INSPN. REPORT	2	1	-	

NOTES:

1 ROUTINE TESTS ON 100% MOTORS SHALL BE DONE BY THE VENDOR. HOWEVER, BHEL SHALL WITNESS ROUTINE TESTS ON RANDOM SAMPLES. THE SAMPLING PLAN SHALL BE MUTUALLY AGREED UPON

2 WHERE EVER CUSTOMER IS INVOLVED IN INSPECTION, (1) SHALL MEAN BHEL AND CUSTOMERS BOTH TOGETHER.

3 FOR EXHAUST/VENTILATION FAN MOTORS OF RATING UPTO 1.5KW , ONLY ROUTINE TEST CERTIFICATES SHALL BE FURNISHED FOR SCRUTINY.

Legends for Inspection agency

1. BHEL/CUSTOMER
2. VENDOR (MOTOR MANUFACTURER)
3. SUB-VENDOR (RAW MATERIAL/COMPONENTS SUPPLIER)

P. PERFORM
W. WITNESS
V. VERIFY

BHEL	PARTICULARS	BIDDER/VENDOR	
	NAME		
	SIGNATURE		
	DATE		BIDDER'S/VENDORS COMPANY SEAL

MOTOR

TEMS/COMPONENTS \ TESTS/CHECKS	Visual	Dimensional	Make/Type/Rating /General Physical Inspection	Mech/Chem. Properties	NDT /DP/MPI/UT	Metallography	Electrical Characteristics	Welding/Brazing(WPS/PQR)	Heat Treatment
Plates for stator frame, end shield, spider etc.	Y	Y	Y	Y	Y				Y
Shaft	Y	Y	Y	Y	Y	Y			Y
Magnetic Material	Y	Y	Y	Y			Y		
Rotor Copper/Aluminium	Y	Y	Y	Y			Y		Y
Stator copper	Y	Y	Y	Y			Y		Y
SC Ring	Y	Y	Y	Y	Y		Y	Y	Y
Insulating Material	Y		Y	Y			Y		
Tubes, for Cooler	Y	Y	Y	Y	Y				Y
Sleeve Bearing	Y	Y	Y	Y	Y				Y
Stator/Rotor, Exciter Coils	Y	Y	Y				Y	Y	
Castings, stator frame, terminal box and bearing housing etc.	Y	Y	Y	Y	Y			Y	
Fabrication & machining of stator, rotor, terminal box	Y	Y			Y			Y	Y
Wound stator	Y	Y					Y	Y	
Wound Exciter	Y	Y					Y	Y	
Rotor complete	Y	Y					Y		
Exciter, Stator, Rotor, Terminal Box assembly	Y	Y					Y		
Accessories, RTD, BTD,CT, Space heater, antifriction bearing, gaskets etc.	Y	Y	Y						
Complete Motor	Y	Y	Y						

Note:
1. This is an indicative list of tests/checks. The manufacture is to furnish a detailed Quality Plan indicating the practices & Procedure followed along with relevant supporting documents during QP finalization. However, No QP for LT motor upto 50KW.
2. Additional routine tests for Flame proof motors shall be applicable as per relevant standard
3. Makes of major bought out items for HT motors will be subject to NTPC approval.

Y1 = for HT Motor / Machines only.

MOTOR

TESTS/CHECKS / ITEMS/ COMPONENTS	Magnetic Characteristics	Hydraulic/Leak/Pressure Test	Thermal Characteristics	Run out	Dynamic Balancing	Routine & Acceptance tests as per IS-325/IS-4722 /IS- 9283/IS 2148/IEC60034\IEC 60079-I	vibration	Over speed	Tan delta, shaft voltage & polarization index test	Paint shade, thickness & adhesion
Plates for stator frame, end shield, spider etc.										
Shaft										
Magnetic Material	Y		Y							
Rotor Copper/Aluminium										
Stator copper			Y							
SC Ring										
Insulating Material			Y							
Tubes for Cooler		Y								
Sleeve Bearing		Y								
Stator/Rotor, Exciter Coils										
Castings, stator frame, terminal box and bearing housing etc.										
Fabrication & machining of stator, rotor, terminal box										
Wound stator										
Wound Exciter										
Rotor complete				Y	Y					
Exciter, Stator, Rotor, Terminal Box assembly										
Accessories, RTD, BTD,CT, , Space heater, antifriction bearing, gaskets etc.										
Complete Motor						Y	Y	Y	Y1	Y

Note: 1. This is an indicative list of tests/checks. The manufacture is to furnish a detailed Quality Plan indicating the practices & Procedure followed along with relevant supporting documents during QP finalization. However, No QP for LT motor upto 50KW.

2. Additional routine tests for Flame proof motors shall be applicable as per relevant standard

3. Makes of major bought out items for HT motors will be subject to NTPC approval.

Y1 = for HT Motor / Machines only.

QUALITY ASSURANCE & INSPECTION MODULE NO. SQE-16

CABLING, EARTHING, LIGHTNING PROTECTION

ATTRIBUTES / CHARACTERISTICS / ITEMS/COMPONENTS / SUB SYSTEMS	Dimension	Paint shade, paint thickness, adhesion	Pre-treatment of sheet	IP protection	Proof load*	Surface finish	Deflection test*	HV & IR	Galvanise Test (If Applicable)	Functional	Bought out items/Bill of material	Routine tests as per relevant standard & specification	Acceptance tests as per relevant standard & specification	Constructional feature as per NTPC
Wall Mounted-Lighting Panel (IS-513, IS:5, IS:2629, 2633, 6745)	Y	Y	Y	Y		Y		Y		Y	Y	Y	Y	Y
Switch box/junction box/ Receptacles Panel (IS-513, IS:5, IS:2629, 2633, 6745)	Y	Y	Y	Y		Y		Y	Y	Y	Y	Y	Y	Y
Cable glands(BS-6121)	Y													Y
Cable lug	Y													Y
Lighting wire (IS-694)	Y											Y		
Flexible conduits	Y											Y		Y
Conduits (Galvanise & Epoxy) IS-9537 & IS-2629, 2633, 6745	Y		Y						Y			Y		Y
RCC Hume Pipe (IS-458)												Y		
Cable termination & straight through joint (IS 13573)	Y											Y		Y
Cable Trays, bends, tees, crosses, Flexible supports system & accessories IS-513, 2629,2633,6745	Y		Y		Y	Y	Y		Y			Y	Y	Y
Trefoil clamp	Y													Y
GI flats for earthing & lighting protection (IS 2062, 2629, 6745,2633)	Y		Y						Y			Y		Y
GI wire (IS-280)	Y											Y		
Fire Sealing System (BS –476)												Y	Y	Y

.Note:1.This is an indicative list of tests /checks. The manufacturer is to furnish a detailed Quality Plan indicating the practice and procedure along with relevant supporting documents.

2.* Deflection Test on cable trays and Proof Load test on cable trays support system will be as per details given in the NTPC technical specification & approved MQP. The above acceptance tests shall be done only on one sample from each size of offered lot. This test is not applicable on bends, tees & crosses.

3. Make of all items will be subject to NTPC approval.

LT Power Cables

Attributes / Characteristics Item / Components / Sub System Assembly	Make, Type & T.C as per relevant standard	Dimension/surface finish	Mechanical properties	Chemical Composition	Spark Test(as applicable)	Electrical properties	Hot Set Test/ Eccentricity & Ovality	Lay length & Sequence	Armour coverage, cross over, looseness, gap between two	Sequential marking/ Batch marking/ surface finish/ cable length	T.S & elongation before & after ageing on outer sheath & insulation	Thermal stability	Anti termite coating on wooden	Constructional requirements feature as per NTPC specification	Routine & Acceptance Tests as per relevant standard & NTPC	FRLS Tests
Aluminum (IS-8130)	Y	Y	Y	Y		Y										
XLPE Compound (IS-7098)	Y		Y			Y	Y				Y					
PVC insulation Compound (IS: 5831)	Y		Y			Y					Y	Y				
FRLS PVC Compound (IS-5831, ASTM-D2843, IS10810(Part 58), IEC-60754 Part-1)	Y		Y								Y	Y				Y
Extrusion & curing /Manufacturing of Core (PVC / XLPE)		Y			Y		Y					Y				
Core Laying								Y								
Armour wire/strip	Y	Y	Y													
Inner sheath	Y	Y														
Armouring		Y							Y							
Outer Sheathing		Y								Y						
Power Cable (Finished) (IS-5831, ASTM-D2843, IS10810(Part 58), IEC-60754 Part-1, IEC 60332 part III cat B)								Y	Y	Y	Y	Y		Y	Y	Y
Wooden drum(IS-10418) /Steel Drum		Y											Y	Y		

Notes:

1. This is an indicative list of tests / checks. The manufacturer is to furnish a detailed Quality Plan indicating the practice and procedure along with relevant supporting documents.
2. Make of all major Bought out items will be subject to NTPC approval.

ROUTINE TESTS	**Following routine tests shall be carried out on each drum of finished cables for all types (PVC / XLPE insulated) & sizes.**	
1)	Conductor Resistance test	
2)	High voltage test	
ACCEPTANCE TESTS	**Following Acceptance tests shall be carried out on each size of each type (PVC / XLPE insulated) of cables, in the offered lot.**	
A) For Conductor (as per sampling plan mentioned in IS: 1554 / 7098)		
	1)	Annealing test (Copper)
	2)	Tensile Test (Aluminum)
	3)	Wrapping Test (Aluminum)
	4)	Resistance test
B) For Armour Wires / Formed Wires (If applicable) (as per sampling plan mentioned in IS: 1554 / 7098)		
	1.	Measurement of Dimensions
	2.	Tensile Tests
	3.	Elongation Test
	4.	Torsion Test For Round wires only
	5.	Wrapping Test
	6.	Resistance Test
	7.	Mass of Zinc coating test For G S wires / Formed wires only
	8.	Uniformity of Zinc coating For G S wires / Formed wires only
	9.	Adhesion test For G S wires / Formed wires only
	10.	Freedom from surface defects
C) For PVC / XLPE insulation & PVC Sheath (as per sampling plan mentioned in IS: 1554 / 7098)		
	1)	Test for thickness
	2)	Tensile strength & Elongation before ageing (for tests after ageing see “D”)
	3)	Hot set test (For XLPE insulation)
D) Ageing test:		

	Criteria	Condition	Test Requirements	Remarks
PVC insulation & outer sheath:	Samples as per relevant IS, from each size of cables in the offered lot, shall be tested for tensile strength & elongation (before ageing). **Tensile & elongation testing shall preferably be done with a computerized machine.** The values will be compared with corresponding values mentioned in the Type Test report accepted by NTPC. These values of Tensile Strength & Elongation (before ageing) should be within +/ - 15% of the corresponding values of Type Test report. (Please note that test values should be more than the minimum values indicated in relevant standard).	All sizes which meet the criteria	The size which has maximum negative deviation from type test report values will be put on accelerated ageing test. The samples shall be aged in air oven at temperature of 130ºc+/- 2ºc for 5 hours and tested for TS & elongation. Acceptance norms shall be as per IS.	In case the size does not meet the requirement in accelerated ageing test **then all sizes (which had met the criteria) will be put on ageing test as per IS.**
		Sizes which do not meet the criteria	Every size will be put on ageing test as per IS.	----
XLPE insulation	Samples as per relevant IS, from each size of cables in the offered lot,will be put on ageing test as per IS.			

E) Following tests will be carried out on completed cables as per IS on each size of each type (PVC / XLPE insulated)

	1)	Insulation resistance test (Volume resistivity method)
	2)	High voltage test

F) Following tests shall be carried out on only one size of offered lot (comprising of all sizes & types)

	1)	Thermal stability test on PVC insulation and outer sheath
	2)	Oxygen index test on outer sheath
	3)	Smoke density rating test on outer sheath
	4)	Acid gas generation test on outer sheath

G) Flammability test as per IEC 60332 - Part- 3 (Category- B) on completed cables as per following sampling plan:		
		This test will be carried out using composite sampling i.e. irrespective of size; cables of one particular type (i.e. armoured PVC insulated, unarmoured PVC insulated, armoured XLPE insulated, unarmoured XLPE insulated) will be bunched together, as per calculations in line with the IEC. All sizes of PVC & XLPE insulated, armoured & unarmoured cables shall be covered. For one particular type, cables with OD less than or equal to 30 mm shall be clubbed together in touching formation while cables with OD greater than 30 mm shall be clubbed together leaving a gap equal to OD of cable having least diameter. Cable OD shall be taken as nominal overall diameter as per NTPC approved datasheet.
H) Following tests shall be carried on one length of each size of each type (PVC / XLPE insulated) of offered lot:		
	1)	Constructional / dimensional check, surface finish, length measurement, sequence of cores, armour coverage, Gap between two consecutive armour wires / formed wires, Sequential marking, drum / Batch (outer sheath extrusion batch)number marking on sheath
	2)	Measurement of Eccentricity & Ovality

DATASHEET-A

1.0 APPLICABLE STANDARDS

a)	IS: 1079	For hot rolled carbon steel sheet and strip.
b)	IS: 1730	For dimensions for steel sheet and strip.
c)	IS: 1363	Hexagon head bolts, screws and nuts.
d)	IS: 2629	For hot dip galvanising of steel & surface pre treatment.
e)	IS: 2633	For testing of zinc coating.
f)	IS: 6745	For determining of mass of zinc coating.
g)	IS: 1367	Galvanised Coating on threaded Fasteners. (Part-XIII)
h)	IS: 1852	For Rolling and Cutting Tolerances of hot rolled steel products.
i)	IS: 9595	For thickness of welding of carbon & carbon manganese steels

2.0 CABLE TRAYS & ACCESSORIES

2.1	Material	:	Hot Rolled Mild Steel
2.2	Type	:	Ladder Type Perforated Type Cable trough
2.3	Standard Length of Straight Length of Cable Trays	:	2.5 meters
2.4	Standard Width (mm)	:	Cable Trays : 600 300 150 Cable Trough: 75 50
2.5	Construction	:	Conforming to enclosed drawing [PE-DG-405-507-E005]
2.6	Bending Radius of Accessories(in mm)	:	600 mm
2.7	Tolerance in length/width / height	:	+ /- 2 mm

3.0 FITTINGS

End connections : Through Coupler plates
(Side Coupler Plates shall be provided as part of cable tray & accessories supply with bolts, nuts, washers etc)

4.0 SHEET THICKNESS

a) For cable trays & Accessories	:	min 2.0 mm
b) For Coupler plate	:	min 3.0 mm
c) Tolerance in Thickness	:	(+ 0.2 mm) (NO NEGATIVE TOLERANCE IS PERMITTED)

6.0 SURFACE TREATMENT

a) Pre-treatment : IS 2629 before galvanisation

b) Type : Hot dip galvanisation

c) Applicable Standard : IS 2629

d) Minimum thickness : 75 microns (minimum)

e) Min. weight of Zinc deposit : 610 grams per square meter

f) Tests for galvanizing : (i) Weight of Zinc Coating as per IS 6745.
(ii) Thickness of Zinc Coating as per IS 4759.
(iii) Uniformity of Zinc Coating as per IS 2633.
(iv) Adhesion Test as per IS 2629.

7.0 NUMBER OF COUPLER PLATES, BOLTS, WASHERS & NUTS REQUIRED FOR EACH CABLE TRAY SECTION (2.5 MTRS)

Sl. No.	NAME OF ITEM	COUPLER PLATE (nos.)	NUTS (nos.)	WASHERS (nos.)	BOLTS (nos.)
1	Cable tray of standard length 2.5 meters	4	16	32	16

NOTE: - Based on above table, no. of coupler plates, bolts, washers & nuts shall be calculated for the offered lot. Over & above the calculated quantity, additional 5% coupler plates & 10% bolts, washers & nuts shall be supplied by the bidder.

DATASHEET A
(SPECIFIC TECHNICAL REQUIREMENTS)

1.0 APPLICABLE STANDARDS:

a) IS: 2062 For structural steel.
b) IS: 1079 For hot rolled carbon steel sheet and strip.
c) IS: 513 For cold rolled low carbon steel sheet & strips
d) IS: 1730 For dimensions for steel sheet and strip.
e) IS: 1363 Hexagon head bolts, screws and nuts.
f) IS: 5 For colours of paint.
g) IS: 2629 For hot dip galvanising of steel & surface pre-treatment.
h) IS: 2633 For testing of zinc coating.
i) IS: 6745 For determining of mass of zinc coating.
j) IS: 1852 For rolling and cutting tolerances of hot rolled steel products.

2.0 CABLE TRAY SUPPORT

a) Tray support type:	Boltable type
b)Material:	Hot/ Cold Rolled MS sheet steel for channel SC1/ DC1 and channel portion of cantilever arms
c)Thickness:	2.5 mm
d) Length:	Standard length of 6 meters
e) Fabrication :	At works
f) Construction:	Conforming to enclosed drawings [PE-DG-405-507-E013]

3.0 SURFACE TREATMENT:

Galvanizing:

a) Pre-treatment:	As per IS 2629 prior to galvanisation
b) Type	Hot dip galvanization
c) Applicable Standard:	IS 2629
d) Minimum thickness:	75 microns (minimum)
e) Min. weight of Zinc deposit:	610 gms. per square meter
f) Tests for galvanizing:	i) Weight of zinc coating as per IS : 6745 ii) Thickness of zinc coating as per IS : 4759 iii) Uniformity of zinc coating as per IS : 2633 iv) Adhesion as per IS: 2629

	TITLE	SPECIFICATION NO.
	MOTOR	VOLUME II B
		SECTION IIB
	DATA SHEET - C	REV NO. 00 DATE
		SHEET 1 OF 2

S. No.	Description		Data to be filled by successful bidder
A.	**General**		
1	Manufacturer & country of origin		
2	Motor type		
3	Type of starting		
4	Name of the equipment driven by motor & Quantity		
5	Maximum Power requirement of driven equipment		
6	Rated speed of Driven Equipment		
7	Design ambient temperature		
B.	**Design and Performance Data**		
1	Frame size & type designation		
2	Type of duty		
3	Rated Voltage		
4	Permissible variation for		
5	a	Voltage	
6	b	Frequency	
7	c)	Combined voltage & frequency	
8	Rated output at design ambient temp (by resistance method)		
9	Synchronous speed & Rated slip		
10	Minimum permissible starting voltage		
11	Starting time in sec with mechanism coupled		
12	a) At rated voltage		
13	b) At min starting voltage		
14	Locked rotor current as percentage of FLC (including IS tolerance)		
15	Torque		
	a) Starting		
	b) Maximum		
16	Permissible temp rise at rated output over ambient temp & method		
17	Noise level at 1.0 m (dB		
18	Amplitude of vibration		
19	Efficiency & P.F. at rated voltage & frequency		
	a) At 100% load		
	c) At 75% load		

NAME OF VENDOR				REV.	
			SEAL		
NAME	SIGNATURE	DATE			

S. No.	Description	Data to be filled by successful bidder
	c) At starting	
C.	**Constructional Features**	
1	Method of connection of motor driven equipment	
2	Applicable Standard	
3	DOP of Enclosure	
4	Method of cooling	
5	Class of insulation	
6	Main terminal box	
	a) Type	
	b) Power Cable details (Conductor, size, armour/unarmour)	
	c) Cable Gland & lugs details (Size, type & material)	
	d) Permissible Fault level (kArms & duration in sec)	
7	Space heater details (Voltage & watts)	
8	Flame proof motor details (if applicable)	
	a) Enclosure	
	b) suitability for hazardous area	
	i Zone	O / I / II
	ii Group	IIA / IIB / IIC
9	No. of Stator winding	
10	Winding connection	
11	Kind of rotor winding	
12	Kind of bearings	
13	Direction of rotation when viewed from NDE	
14	Paint Shade & type	
15	Net weight of motor	
16	Outline mounting drawing No (To be enclosed as annexure)	
D.	**Characteristic curves/ drawings** (To be enclosed for motors of rating ≥ 55KW)	
	a) Torque speed characteristic	
	b) Thermal withstand characteristic	
	c) Current vs time	
	d) Speed vs time	

SUB-SECTION-IC

CONTROL AND INSTRUMENTATION FOR MILL REJECT SYSTEM

C&I SPECIFICATION FOR MILL REJECT SYSTEM

INDEX

S. No.	DESCRIPTION
1	TITLE SHEET
2	INDEX SHEET
3	C&I SPECIFIC TECHNICAL REQUIREMENTS
4	GENERAL TECHNICAL SPECIFICATION
5	LIST OF DOCUMENTS/DELIVERABLES
6	MEASURING INSTRUMENTS (PRIMARY & SECONDARY)
7	DATA SHEETS FOR MOTORISED VALVE ACTUATOR
8	SIGNL EXCHANGE BETWEEN DRIVES & DCS
9	DRIVE AND INSTRUMENT INTERFACE DIAGRAM
10	INSTRUMENT CABLE INTERCONNECTION AND TERMINATION PHILOSOPHY
11	QUALITY ASSURANCE
12	TYPE TEST REQUIREMENT
12	INSTRUMENT INSTALLATION DRAWING
13	MANDATORY SPARE LIST
14	SUB VENDOR LIST
15	KKS TAGGING PHILOSOPHY
16	FORMAT FOR PROVENNESS CERTIFICATE

C&I SPECIFIC TECHNICAL REQUIREMENT
FOR DCS BASED
MILL REJECT SYSTEM

Specific Technical Requirements (C&I):

1. MRHS shall be operated from DDCMIS (in BHEL's scope) through operator work station located in central control room.

2. Interface of MCC, Solenoid valves, etc. with DDCMIS based control system shall be as per Drive Control Philosophy enclosed in specification.
3. Bidder to provide one number local control panel for each pyrite hoppers. This local panel will act as interface between the DCS and the field devices for commands & feedbacks.
4. Instrument installation shall be as per the attached "Standard Hook-up diagram of instrument."
5. The Contractor shall provide complete Instrumentation for control, monitoring and operation of entire MRHS. The requirements given here are to be read in conjunction with detailed Technical specification enclosed in the specification. Further, in case of any discrepancy in the requirement within the same section noted by the bidder in the specification, the same will be brought to the notice of BHEL in the form of pre- bid clarification. In absence of any pre-bid clarification, the more stringent requirement as per interpretation of customer shall prevail without any commercial implication.
6. The quantity of instruments for the system shall be as per tender P&ID wherever provided of the respective system as a minimum, for bidding purpose. However, Bidder shall also include in his proposal all the instruments and devices that are needed for the completeness of the plant auxiliary system/ equipment supplied by the bidder, even if the same is not specifically appearing in the P&ID. During detail engineering if any additional instruments are required for safe & reliable operation of plant, bidder shall supply the same without any price implication.
7. In addition to requirements specified here, all C&I systems/ sub-systems/ equipment/ devices shall also meet other requirements stipulated under other Sub-sections/ parts/ sections of specification.

8. The make/model of various instruments/items/systems shall be as per customer approved vendor list. No commercial and delivery implication in this regard shall be

acceptable. In case of any conflict and repetition of clauses in the specification, the more stringent requirements among them are to be complied with.

9. Redundancy of sensors shall be provided by bidder
   (i) Triple redundancy for all analog and binary inputs required for protection of system/drives.
   (ii) For all other control functions dual redundancy of the sensors shall be provided
   by the bidders.
10. Temperature transmitter shall be provided for all temperature measurement applications. Bidder to provide temperature transmitter along with compensating cable, JB/Rack & other erection hardware.
11. Use of process actuated switch shall be avoided.
12. All the transmitters supplied by Bidder shall be rack mounted. The transmitter racks shall be in Bidder's scope of supply. All transmitters shall be HART compatible
13. Instrument installation and accessories required for the same shall be in Bidder's scope. However, any instrument/ analyzer installation not covered in the specification, same shall be subject to customer and BHEL approval during detailed engineering. All instruments required for the package shall be supplied, mounted on the gauge board racks, along with accessories like impulse pipe, fittings & valve manifolds etc.
14. All field instruments enclosure shall be IP65.Local panel/cabinet enclosure shall be IP 55, unless otherwise specified.
15. All instruments and control elements shall be terminated on JB/LCP in field and both instrument and JB/LCP are in bidder scope. Number of Junction Boxes shall be sufficient and positioned in the field to minimize local cabling (max 12-15 mtrs) and trunk cable.
16. Bidder to perform tests of C&I items/instruments/systems as per Quality plans/type test attached in the specification. However, if any test not specified in the quality plan but specified in specification Tests for I&C equipment included elsewhere in specification will have to perform by Bidder without any cost implication. The make/model of various instruments/items/systems shall be as per customer/BHEL

approved vendor list. No commercial and delivery implication in this regard shall be acceptable. In case of any conflict and repetition of clauses in the specification, the more stringent requirements among them are to be complied with.

17. Local control panel/station if any required for operation shall be in bidder scope.
18. RF Type level switches shall be provided for interlock & monitoring purpose on transport vessels.
19. The solenoid operated valves/Dampers/Gate shall have a limit switch for open/close feedback. Control voltage of Solenoid Valve shall be 24V DC only.
20. Bidder to provide mandatory spares as per mandatory spares list attached elsewhere in the specification
21. For cable scope refer to electrical scope between BHEL and vendor defined in electrical specification.
22. Number of pairs to be selected for Screen /Control cable
    a. F-Type: 2P/4P/8P/12P (Size: 0.5sqmm2)
    b. G-Type: 2P/4P/8P/12P (Size: 0.5sqmm2)
    c. Core Cable: 3C X 2.5sqmm2/ 5CX2.5sqmm2/ 12CX1.5sqmm2
23. Bidder's presence is required for 3 Man days (Excluding travel time) at EDN Bangalore during FAT of DDCMIS for certifying correctness & completeness of implementation of Control logic. Date and other details of FAT shall be communicated 2 days in advance. All the expenses like boarding, lodging and travel, Air fare etc. shall be in bidder's scope.
24. Bidder's presence is required for 21 Man days (in three visit) at site during commissioning of DDCMIS for assistance related to process correctness. Three visit with total 21 Man days (Excluding travel time) in which one visit shall be of 7 Man days each. All the expenses like boarding, lodging and travel, Air fare etc. shall be in bidder's scope.
25. Contractor's C&I representative shall be present at BHEL-PEM for 3 man-days, for preparation of Control scheme of MRHS. All the expenses like boarding, lodging and travel, Air fare etc. shall be in bidder's scope.
26. In case of any conflict and repetition of clauses in the specification, BHEL discretion will prevail.

27. The bidders shall specifically mention any deviation taken against any clause of the C&I specification. In absence of any deviation, No deviation certificate is to be furnished.
28. The specifications of instruments mentioned elsewhere in the specification is only minimum requirement. The detailed specification shall be finalized during detail engineering.
29. Bidder to furnish UPS load requirement during detailed engineering
30. 230 V AC UPS Power supply shall be provided by BHEL at a single point, further distribution to various instruments/equipment of the system shall be in bidder scope. Bidder to include necessary power distribution board/change over switch etc. in his scope. Any power supply other than the above, if required by any instrument/equipment has to be derived by the bidder from the above supply & all necessary hardware for the same shall be in bidder scope. Bidder to submit the power requirement along with the bid.
31. Contractor shall furnish Instrument Schedule, I/O list, Drive list, Cable Schedule, Cable interconnection, JB grouping, Annunciation list, Plant schematics, recommended control logics / write-up, SOE list, List of Instruments/devices for HART in BHEL approved format. Also reusable database format like MS Excel, MS Access etc. of these documents shall also be provided by Contractor in BHEL approved format. Soft copy of the formats shall be provided to the successful bidder.
32. Guided wave radar type Level transmitter shall be provided at each MRS silo for level measurement.
33. Measuring instruments (primary & secondary), SWAS equipment/analysers offered for this package shall have at least one year's satisfactory operation in one power station having unit rating of 200 MW or above. Provenness certificate shall be provided as per the attached format (Annexure - 1).

SECTION – D

GENERAL TECHNICAL SPECIFICATION CONTROL & INSTRUMENTATION

GENERAL REQUIREMENT

1.0 Bidder shall provide complete and independent control & instrumentation system with all accessories, auxiliaries and associated equipments for the safe, efficient and reliable operation of auxiliary systems.

2.0 The quantity of instruments for auxiliary system shall be as per tender P &ID wherever provided of the respective system as a minimum, for bidding purpose. However, Bidder shall also include in his proposal all the instruments and devices that are needed for the completeness of the plant auxiliary system/ equipment supplied by the bidder, even if the same is not specifically appearing in the P & ID. During detail engineering if any additional instruments are required for safe & reliable operation of plant, bidder shall supply the same without any price implication.

3.0 Measuring instruments/equipment and subsystems offered by the bidder shall be from reputed experienced manufacturers of specified type and range of equipment, whose guaranteed and trouble free operation has been proven. Further all the instruments shall be of proven reliability, accuracy, and acceptable international standards and shall be subject to employer's approval. All instrumentation equipment and accessories under this specification shall be furnished as per technical specification, ranges, makes/ numbers as approved by the employer' during detail engineering.

4.0 The necessary root valves, impulse piping, drain cocks, gauge-zeroing cocks, valve manifold and all the other accessories required for mounting/ erection of these local instruments shall be furnished, even if not specifically asked for, on as required basis. The contacts of equipment mounted instruments; sensors, switches etc for external connection including spare contacts shall be wired out to suitably located junction boxes.

5.0 The customer specification attached as Specific Technical Requirement will supercede the Data sheets, if there is any mismatch.

LIST OF DOCUMENTS/DELIVERABLES

LIST OF DELIVERABLES OF PEM - C&I DEPARTMENT			
Sl.No.	**DRAWING NO.**	**DRAWING/DOCUMENT TITLE**	**CATEGORY**
1	PE-V0-434-145-I901	CONTROL & OPERATIONAL WRITE-UP FOR THE SYSTEM	A
2	PE-V0-434-145-I902	CONTROL SCHEME/LOGIC DIAGRAM (TO BE IMPLEMENTED IN DDCMIS)	A
3	PE-V0-434-145-I903	HMI PICTURES/PLANT SCHEMATICS	A
4	PE-V0-434-145-I904	INSTRUMENT SCHEDULE with set points	A
5	PE-V0-434-145-I905	I/O LIST (ANALOG & BINARY)	A
6	PE-V0-434-145-I906	DRIVE LIST/SOLENOID/ACTUATOR VALVE LIST WITH LOCATION DATA	A
7	PE-V0-434-145-I907	FIELD JB/LIE/LIR,DRIVES TERMINATIONS	A
8	PE-V0-434-145-I908	DATASHEETS FOR INSTRUMENTS, JBs, etc.	A
9	PE-V0-434-145-I909	QUALITY PLANS (INSTRUMENTS, VMS, etc.)	A
10	PE-V0-434-145-I910	INSTRUMENT HOOK-UP DRAWING	A
11	PE-V0-434-145-I911	THERMOWELL SIZING CALCULATION	A
12	PE-V0-434-145-I913	CABLE SCHEDULE & INTERCONNECTION	A
13	PE-V0-434-145-I914	ANNUNCIATION & SOE LIST	A

NOTES:
ANY OTHER DOCUMENT DECIDED DURING DETAILED ENGINEERING SHALL BE PROVIDED BY BIDDER WITHOUT ANY COMMERCIAL/TECHNICAL IMPLICATION.

CONTRACTOR TO SUBMIT REUSABLE DATABASE FORMATS IN BHEL/CUSTOMER APPROVED FORMATS LIKE MS EXCEL, MS ACCESS OF DOCUMENTS LIKE INSTRUMENT SCHEDULE, I/O LIST, DRIVE LIST, FIELD JB TERMINATIONS, CABLE SCHEDULE & INTERCONNECTION, etc.
SOFT COPY OF FORMATS SHALL BE PROVIDED TO SUCCESSFUL BIDDERS.

MEASURING INSTRUMENTS (PRIMARY & SECONDARY) & SPECIFICATION FOR ELECTRONIC TRANSMITTERRS

1.00.00 **MEASURING INSTRUMENTS (PRIMARY AND SECONDARY)**

1.01.00 Measuring instruments/equipment and subsystems offered by the Bidder shall be from reputed experienced manufacturers of specified type and range of equipment, whose guaranteed and trouble free operation has been proven. Refer Sub-section Basic Design Criteria. Further, all instruments shall be of proven reliability, accuracy, and repeatability requiring a minimum of maintenance and shall comply with the acceptable international standards and shall be subject to Employer's approval.

1.02.00 Every panel-mounted instrument requiring power supply shall be provided with easily replaceable glass cartridge fuses of suitable rating. Every instrument shall be provided with a grounding terminal and shall be suitably connected to the panel grounding bus.

1.03.00 All transmitters, sensors, switches and gauges for parameters like pressure, temperature, level, flow etc. as required for the safe and efficient operation and maintenance as well as for operator and management information (including all computation) of equipment in the system under the scope of specification shall be provided on as required basis with in quoted lump sum price. The Contractor shall furnish all Instrumentation / Control equipment & accessories under this specification as per technical specification, ranges, makes & model as approved by the Employer during detailed engineering.

1.04.00 The necessary root valves, impulse piping, drain cocks, gauge-zeroing cocks, valve manifolds and all the other accessories required for mounting/erection of these local instruments shall be furnished, even if not specifically asked for, on as required basis. The contacts of equipment mounted instruments, sensors, switches etc. for external connection including spare contacts shall be wired out in flexible/rigid conduits, independently to suitably located common junction boxes. The proposal shall include the necessary cables, flexible conduits, junction boxes and accessories for the above purpose. Double root valves shall be provided for all pressure tapping where the pressure exceeds 40 Kg./sq.cm.

1.05.00 All instruments envisaged for sea water applications, shall be provided with wetted parts made of Monel/ Hastelloy C or any other material (if provenness experience of the proposed material for such applications is established by contractor).

For Chlorine application: Instruments shall be provided with wetted parts (e.g. diaphragm seal, etc.) made of Hastelloy C. Also, filled liquid shall be Fluorolube oil/ Inert Hydrocarbon / CTFE etc., for these applications.

For applications of FECL3 solution: Instruments shall be provided with wetted parts (e.g. diaphragm seal, etc.) made of Tantalum.

1.06.00 For coastal areas, all instruments shall be provided with durable epoxy coating for housings and all exposed surfaces of the instruments.

2.00.00 **SPECIFICATION FOR ELECTRONIC TRANSMITTERS**

2.01.00 **SPECIFICATION FOR ELECTRONIC TRANSMITTER FOR PRESSURE, DIFF PRESS AND DP BASED FLOW / LEVEL MEASUREMENTS**

Sl.No.	Features	Essential/Minimum Requirements
1.	Type of Transmitter	Microprocessor based 2 wire type (loop powered), Hart protocol compatible.
2.	Accuracy	± 0.1% of calibrated span (minimum)
3.	Output signal range	4-20 mA DC (Analog) along with superimposed digital signal (based on HART protocol)
4.	Turn down ratio (minimum)	10:1 for vacuum/very low pressure applications (i.e. pressure <= 200 mmWC) 5:1 for very high pressure application (i.e. pressure >= 200 Kg/cm2) 30:1 for other applications
5.	Stability	± 0.1% of calibrated span for six months for Ranges up to and including70 Kg/cm² ± 0.25% of calibrated span for six months for Ranges more than 70 Kg/cm²
6.	Zero and span drift	+/- 0.015% per deg.C at max span +/-0.11% per deg.C at min. Span
7.	Load impedance	500 ohm (minimum)
8.	Housing	Weather proof as per IP-65, metallic housing with durable corrosion resistant coating
9.	Over Pressure	150% of max. Operating pressure
10.	Connection (Electrical)	Plug and socket type
11.	Process connection	1/2 inch NPT (F)
12.	Span and Zero	Continuous, tamper proof, Remote as well as manual adjustability from instrument with zero suppression and elevation facility.
13.	Accessories	-Diaphragm seal, pulsation dampeners, syphon etc. as required by service and operating condition. -2 valve manifold for absolute & Gauge pressure transmitters, 3-valve and 5 valve manifold for DP/Level/Flow applications. The valve manifold shall be non integral type (except Fuel Oil area).

		-For hazardous area, explosions proof enclosure as described in NEC article 500 Mounting: 2 inch pipe mounting.
14.	Diagnostics & display	Self-Indicating feature and digital display on transmitter
15.	Power supply	24V DC ± 10%.
16.	Adjustment/calibration/maintenance	From hand held HART calibrator/ centralized PC based system (as applicable).

Notes

- For primary air/ secondary air/flue gas applications, DP type transmitters shall be provided for pressure measurement.
- LVDT type is not acceptable.
- Where the process fluids are corrosive, viscous, solid bearing or slurry type, diaphragm seals shall be provided. Parts below the diaphragm shall be removable for cleaning. The entire volume above the diaphragm shall be completely filled with an inert liquid suitable for the application.

2.02.00 GUIDED WAVE RADAR TYPE LEVEL TRANSMITTER

Type	Microprocessor based 2 wire type (loop powered), HART protocol compatible Guided wave radar transmitter.
Principle	TDR (Time domain reflectometry)
Probe Type & Material	(i) Coaxial probe of SS316/316L. If required, probe shall be suitable for overfill prevention. (ii) Rod probe, cable probe of SS316/SS316L can be used for applications wherever coaxial probe is not suitable.
Output signal	4-20 mA DC along with superimposed digital signal (based on HART protocol), suitable for over fill prevention.
Accuracy	+/- 0.5% of calibrated span or minimum 5mm.
Power supply	24 VDC +/- 10%.
Housing	Weather proof as per IP-65, metallic housing with durable corrosion resistance coating.

Adjustment/ calibration	Using hand held HART calibrator/ centralized PC based system (as applicable).
Zero & span adjustment	Continuous, temper proof, remote as well as manual adjustability from instrument. It should be possible to calibrate the instrument without any level in the tank/sump etc.
Display	Integral digital display.
Load Impedance	500 ohms (minimum).
Electromagnetic compatibility	Shall meet EN 61326-1 (1997) and AmdtA1, class A equipment/EN 50081-2 & EN 5008 1-2 & EN 50082-2
Mounting	(i) External cage shall be provided where ever side mounting is required. External cage and other mounting accessories to be provided by the contractor. (ii) Where ever top mounting is required, all mounting accessories, stilling well (as required) etc., shall be provided by the contractor. (iii) All weather canopy shall be provided for protection from direct sunlight and direct rain for open locations.

Note: Four wire type transmitters can also be provided for applications where 2- wire transmitter has some technical limitations, subject to employer's approval during detailed engineering stage. However, in such cases isolated 4-20 mA DC (analog) output shall be provided. Power supply required for such transmitters shall be 240V AC / 24V DC.

2.03.00 Ultrasonic Type level Transmitter

S.No.	Features	Essential/Minimum requirement
1.	Type of Transmitter	Non-contact Microprocessor based 2 wire type (loop powered), HART protocol compatible Ultrasonic transmitter.
2.	Output signal	4-20 mA DC (Analog) along with superimposed digital signal (based on HART protocol).

3.00.00 **Temperature Elements and accessories**

3.01.00 **Thermocouple**

Sr. No.	Features		Essential/Minimum Requirements
1	Type of Thermocouple.	:	16 AWG wire of Chromel-Alumel (Type K) or 24 AWG wire Pt-Rhodium Pt (Type R) depending on operating temperature Range (ungrounded separate junction type).
2	No. of element	:	Duplex
3	Housing/Head	:	IP-65/Diecast Aluminium. Head of TE to be provided with sufficient space and arrangement to mount head mounted temperature transmitter (as applicable). Plug in connectors are to be provided for external signal cable connection. TE terminal head shall be spring loaded for positive contacts with the thermo well.
4	Insulation and Sheathing of Thermocouple	:	Swaged type mineral (magnesium oxide) insulation and SS316 sheath.
5	Calibration and accuracy	:	As per IEC-584/ ANSI-MC-96.1 (special limits of errors/ class1) for T/C.
6	Accessories	:	Thermo well and associated fittings
7	Standard	:	IEC-584/ ANSI MC 96.1 for Thermocouple and ASME PTC-19.3 for Thermo-well

3.02.00 **Resistance Temperature Detector (RTD)**

Sr. No.	Features		Essential/Minimum Requirements
1	Type of RTD.	:	Four wire, Pt-100 (100 Ohms resistance at zero degree Centigrade).
2	No. of element	:	Duplex
3	Housing/Head	:	IP-65/Diecast Aluminium. Head of TE to be provided with sufficient space and arrangement to mount head mounted temperature transmitter (as applicable). Plug in connectors are to be

			provided for external signal cable connection. TE terminal head shall be spring loaded for positive contacts with the thermo well
4	Insulation and sheathing of RTD	:	Mineral (magnesium oxide) insulation and SS316 sheath,
5	Calibration and accuracy	:	As per As per IEC-751/ DIN-43760 Class-A for RTD
6	Accessories	:	Thermo well and associated fittings
7	Standard	:	IEC-751/ DIN-43760 for RTD and ASME PTC-19.3 for Thermo-well.

NOTES :

1) The specifications for RTDs of winding/ bearings of motor/pump, can be as per their manufacturer standards. The manufacturer shall submit the adequate supporting documents for establishing their standard practice. However the type of RTD shall be Pt100.

2) The specifications of temp elements for air conditioning & ventilation system / process can be as per system manufacturer's standards. The manufacturer shall submit the adequate supporting documents for establishing their standard practice.

3.03.00 Metal Temperature Thermocouples

Measuring Medium	Metal Temperature
Material of Thermocouple.	Chromel Alumel Type K
Type of Thermocouple	Duplex with ungrounded separate hot junctions
Insulation	Mineral Insulation (Magnesium Oxide).
Thermocouple wire gauge	16 AWG
Protective sheath	SS 321
Protective sheath dia	8 mm OD
Calibration & accuracy	As per IEC-584/ ANSI-MC-96.1 (special limits of error) for T/C
Mounting accessories	1/2" BSP SS sliding end connector, weld pad, clamps of heat resistant steel SS310. Adjustable gland fitting for connection at the junction box end as per manufacturer's standard.
Cold end sealing	SS pot seal with colour coded PTFE Insulated flexible tails. Sealing compound- Epoxy resin. Length of PTFE insulated flying leads shall be minimum 750 mm.

Minimum bending radius	30 mm
Length of T/C	On as required basis considering location of measurement point and the JB/TTJB location.

Notes :

1) The specification for thermocouples of bearings metal temp measurements can be as per their manufacturer standards. The manufacturer shall submit the adequate supporting documents for establishing their standard practice. However type of thermocouples shall be K-type.

2) For boiler metal temperature applications, considering the location of installations and response time, manufacturer's standard and proven specification for metal temperature measurement can also be accepted subject to employer's approval. The manufacturer shall submit adequate supporting documents for establishing their standard and proven practice.

3.04.00 **Thermo well** (for all process temp. elements)

(a) Shall be one piece solid bored type of 316 SS of step-less tapered design. (As per ASME PTC 19.3, 1974)

(b) For Mill classifier outlet long life solid sintered tungsten carbide material of high abrasion resistance shall be provided.

(c) For Air & Flue gas 316 SS protecting tube with welded cap. (However contractor shall provide better material for Flue gas service if required based on the specified boiler design parameters).

(d) For furnace zone, impervious ceramic protecting tube of suitable material along with Incoloy supporting tubes and adjustable flanges.

3.05.00 **Not Used**

3.06.0 **TEMPERATURE TRANSMITTER (TT)**

Following types of 2-wire (loop powered) temperature transmitter (directly powered from 4-20mA input cards of DDCMIS/PLC) shall be provided. The temperature transmitter shall be fully compatible with thermocouples and RTDs being provided by the contractor. Temperature compensation of the thermocouples shall be performed in the temperature transmitter itself.

a. Single Input Head mounted Temperature Transmitter

These shall be suitable for mounting in the head of temperature element itself. Temperature transmitter and associated temperature element shall be factory fitted.

b. Single Input DIN-rail mounted Temperature Transmitter

These shall be suitable for mounting on DIN-rails in JBs. The specifications of the JBs shall be same as indicated in Subsection INST CABLE with additional DIN-rails and IP 65 Protection class. This temperature transmitter shall be the ones which are

especially designed for DIN-rail mounting with IP 20 protection class. These shall have terminals for input/output provided on front side when mounted on DIN-rail. Head mounted temperature transmitter with clamps to make it suitable for DIN-rail mounting shall not be acceptable under this category.

c. Dual-input Temperature Transmitter With **integral** Indicator:

These shall be suitable for mounting on pipes/ support. Both elements of the duplex thermocouple/ RTD shall be wired to a single transmitter. Integral indicator shall be provided with these transmitters. These transmitters shall have bump less change over facility to second sensor in case first sensor fails .This change-over is to be alarmed. Protection class shall be IP65 minimum.

d. Common requirements for each of the above type of temperature transmitters.

Output	:	2-wire (power supply from input card of Control System) with 4-20mA output with superimposed HART protocol signal.
Input	:	Same transmitter shall be capable to handle Pt-100 RTD, Thermocouples –K & R types (input type to be selectable at site through HART terminal).
Isolation	:	Min. 500 V AC.
EMC compatibility	:	As per EN 61326.
Operating ambient temperature	:	0 to 85 deg C (without indicator). 0 to 70 deg C (with indicator).
Power supply		24V DC +/- 10%.
Accessories		Mounting arrangements including clamps etc.
Composite Accuracy	(i)	For head mounted and DIN-rail mounted types:
(Refer note 2)		RTD =<0.4% of 0-250 deg C span
		T/C-K type =<0.4% of 0-600 deg C span
		T/C-R type =<0.4% of 0-1000 deg C span
		CJC accuracy (for thermocouples) shall be =< 1 deg C
	(ii)	For dual-input type:
		RTD =<0.25% of 0-250 deg C span
		T/C-K type =<0.2% of 0-600 deg C span
		CJC accuracy (for thermocouples) shall be =< 1 deg C

e. Field bus compatible temperature transmitters

Temperature transmitters of this category shall be field mounting type & shall be capable of withstanding operating ambient temperature upto 85 deg C. These modules shall be connected to DDCMIS through field bus such as Profibus, Foundation Field bus etc directly from the transmitter. Maximum Number of inputs per such temperature transmitter shall be eight. These shall be mounted in cabinets/enclosures/JBs in non-AC areas.

As an alternate, these signals from temperature transmitters can be connected to DDCMIS through standard remote I/O modules of the DCS, in which case, the temperature transmitter signals will be acquired through 4-20mA input modules in the remote I/O cabinet for connecting to DDCMIS through remote I/O bus.

Air conditioned panel shall be provided for remote I/O.

Notes ***(Common for a) to d) above):-***

1. In case of failure (open or burn-out) of RTD/thermocouple, temp. Transmitter shall provide low temperature output.
2. Composite Accuracy is to be calculated as summation of all applicable accuracies of temp transmitter, for converting sensor input to output in 4-20 mA (e.g., basic accuracy, digital accuracy, D/A accuracy, etc.) and temperature effect on these accuracies at ambient temperature of 50 deg C, based on the figure/ formula given in the standard product catalogue for span as specified above for various types of Temperature Elements specified. All such accuracy/ temp effect figures in catalogue shall be first converted to deg C, and then percentage of this converted accuracy in specified span shall be calculated to compare with the specified composite accuracy figures. All temperature transmitters are to be interchangeable (i.e. can be used for either RTD or thermocouple) and composite accuracy shall be met for each type of input specified in (i) & (ii).

4.00.00 **ELECTRICAL METERING INSTRUMENTS**

Electrical metering instruments shall be furnished in accordance with the following general specifications. However, the scope shall be governed by the Contract quantity given in appendix-1 to part-A. Application standard for electrical metering instruments shall be as per IS: 1248- 2003 (Revised). The size of each instrument shall be as approved by Employer during detailed engg. All metering instruments shall be flush panel mounting type.

4.01.00 (a) Frequency meters for Synchronization purposes: Accuracy: ± 1.5% of full scale.

(b) Synchroscope: Accuracy class: 0.5 or better.

(c) Voltmeters: Accuracy: ± 2.0% of full scale or better.

4.02.00 **Synchronizing Relays**

Synchronizing check relay with necessary ancillary equipment shall be provided which shall permit breakers to close after checking the requirements of synchronizing of incoming and running supply. The phase angle setting shall not exceed 10 Degree and this angle shall be adjustable and shall take the account the circuit breaker closing period. This relay shall have a response time of less than 200 milliseconds when the two system conditions are met within preset limits and with the timer disconnected. The relay shall have a frequency difference setting not exceeding 0.45% at rated value and at the minimum time setting. The relay shall have a continuously adjustable time setting range of 0.5-3 secs. Additionally, a guard relay shall be provided to prevent the closing attempt by means of synchronizing check relay when control switch is kept in closed position long before the two systems are in synchronism. The Control Voltage shall be 220V DC and PT input Voltage shall be 110 V AC.

~~In case it is the proven standard practice of a Contractor to provide vibration monitoring PC with TFT LCD monitor, instead of dedicated monitors with the signal conditioning equipment in control equipment room, the same shall also be acceptable. However, all relevant functional requirements detailed above shall be met and the system shall be subject to Employer's approval.~~

8.00.00 **E-P Converter**

E-P converters and associated accessories shall be furnished in accordance with the specifications given below :

A. Fail Freeze Type E/P convertes

1	Air supply Pressure	:	2 kg/sq. cm.
2	Input signal	:	4-20mA DC
3	Output signal	:	0.2 to 1.0 kg/sq. cm
4	Linearity	:	0.5% of span or better.
5	Span/Zero Adjustment	:	To be provided
6	Hysteresis	:	0.5% of span or better.
7	Fail Freeze Feature	:	Stay put at last position on failure of 4 –20mA signal.
8	Allowable drift rate	:	Maximum 2% set point/ hour.
9	Ambient Temperature Effect	:	less than 0.02% of span per deg C between -
10	Mounting	:	Surface/Pipe/Bracket Mounting.
11	Protection class	:	IP 65.
12	Connection Port Sizes	:	¼ inch NPT (F)
13	Electrical Cable Entry	:	½ inch NPT
14	Output Pressure Gauge	:	1/4 inch NPT connection, 2 inch dial.
15	Accessories	:	All accessories like mounting brackets, fittings etc. required for installation is to be supplied.

B. FaiL Safe type E/P converters

1	Air supply Pressure	:	2 kg/sq. cm.
2	Input signal	:	4-20mA DC
3	Output signal	:	0.2 to 1.0 kg/sq. cm
4	Linearity	:	0.5% of span or better.
5	Span/Zero Adjustment	:	To be provided.
6	Hysteresis	:	0.5% of span or better.
7	Fail Safe Feature	:	Output shall drive to minimum on failure of either 4-20mA signal or air supply.
8	Mounting	:	Surface/Pipe/Bracket Mounting.
9	Ambient Temperature Effect	:	less than 0.02% of span per deg C between -20 to +60 deg C.
10	Protection class	:	IP 65.
11	Connection Port Sizes	:	¼ inch NPT (F)
12	Electrical Cable Entry	:	½ inch NPT
13	Output Pressure Gauge	:	1/4 inch NPT connection, 2 inch dial.
14	Accessories	:	All accessories like mounting brackets, fittings etc. required for installation is to be supplied.

9.00.00 **NOT USED**

10.00.00 **AMBIENT AIR QUALITY MONITORING STATION (AAQMS)**

10.01.00 **General Specifications for AAQMS**

10.01.01 The Analysers / Monitors should be 19" Rack Mounted with the ON / OFF switch and display of all important status signals including Lamps, etc should be preferably on the front panel.

10.01.02 The system must function properly in the weather and atmospheric conditions mentioned in Sub-Section-IIIC-01, in view of ambient temperature, relative humidity and high dust levels for instruments / equipments housed in an enclosure.

10.01.03 The system should function without frequent servicing / maintenance. The parts requiring regular service / maintenance must be easily accessible.

10.01.04 All ambient Gas Analysers and Dust Monitor shall conform to the US EPA reference or equivalent method. A proof of approvals and certificates of the above compliance along with copy of the Test Report (in English) from internationally reputed agencies such as US EPA, TUV / UAB of Germany, Envt Canada, Envt. Japan, EEC etc shall be furnished.

The measurement accuracy of the transmitter shall be better than +0.2%.

The transmitter shall provide suitable 4-20mA dc output signal for control and indication/recording. Converters if necessary shall be provided to generate the 4-20mA signal.

A local indicator of fuel oil flow shall also be provided. The instrument shall be calibrated in Tons/hr.

Suitable strainer shall be provided before the transmitter for the protection of oval wheel meters against foreign matter contained in the fuel oil.

The exact model no. and type of material being used, etc., shall be subject to Employer's approval during detailed engineering without any price repercussion to Employer.

15.00.00 PROCESS ACTUATED SWITCHES

FEATURES	ESSENTIAL / MINIMUM REQUIREMENTS		
	Pressure/ Draft Switches/ DP Switches	Temperature switches	Level switches
Sensing Element	Piston actuated for high pressure and diaphragm or bellows for low pr./ vacuum	Vapor pressure sensing, liquid filled bellow type with SS bulb and capillary (5 m minimum, to suit application)	Capacitance types, float type, conductivity type, RF type, Ultrasonic type as per suitability to the application. .
Material	316 SS	Bulb 316 SS/ capillary 304 SS	316 SS
End connection	½ inch NPT (F)	½ inch NPT (F)	Manufacturer standard
Over range/ proof pressure	150% of maximum operating pr.	-	150% of maximum operating pr.
Repeatability	+/- 0.5% of full range		
No. of contacts	2 No.+2NC. SPDT snap action dry contact		
Rating of contacts	60 V DC, 6 VA (or more if required by DDCMIS)		
Elect. Connection	Plug in socket.		
Set point adjustment	Provided over full range.		
Dead band adjustment	Adjustable/ fixed as per requirement of application.		

Enclosure	Weather and dust proof as per IP-55, metallic housing.		
Accessories	Siphon, snubber, chemical seal, pulsation dampeners as required by process	Thermo well of 316 SS and packing glands	All mounting accessories
Mounting	Suitable for enclosure/ rack mounting or direct mounting	Suitable for rack mounting or direct mounting	-
Power Supply (wherever required)	As per Contractor's Standard practice.		

Notes :-

1) Where the process fluids are corrosive, viscous, solid bearing or slurry type, diaphragm seals shall be provided. Parts below the diaphragm shall be removable for cleaning. The entire volume above the diaphragm shall be completely filled with an inert liquid suitable for the application.

2) Pressure/ Diff pressure switches for very low press/ DP measurements can have sensor material other than SS316 in case of any technical limitation and the offered product is standard product of the manufacture for very low pressure applications.

3) Repeatability can be upto +/-1% of full range in case of switches with diaphragm seals or very low pressure/DP range.

4) The specifications of switches for air conditioning & ventilation system / process can be as per system manufacturer's standards. The manufacturer shall submit the adequate supporting documents for establishing their standard practice.

16.00.00 **NOT USED**

17.00.00 **SOLENOID VALVES**

Solenoid valves shall fulfil the following requirements:

a. Type 2/3/4 way SS 316/Forged Brass (depending on the application subject to Employer's approval during detailed Engg.)

b. Power supply : 24 V DC ± 10%.

c. Plug and socket electrical connection.

d. Insulation : Class 'H'

18.00.00 **REVERSE ROTATION INDICATOR (RRI)**

Reverse rotation indicator comprising of proximity sensors, processing electronics with output of 4-20mA (corresponding to speed) interconnecting cables, speed display in rpm,

21.00.00	**Limit switches** For offsite plant application Limit switches shall be gold plated with high conductivity and non corrosive type. Contact rating shall be sufficient to meet the requirement of DDCMIS subject to a minimum of 60 V, 6 VA rating. Protection class shall be IP 55. For main plant application limit switches are to be provided as per contractor standard and proven practice.

SPECIFICATIONS FOR PR. GAUGE, D.P. GAUGE, TEMP. GAUGE AND LEVEL GAUGE.

Sl. No	FEATURES	ESSENTIAL/MINIMUM REQUIREMENTS		
		Pr. Gauge/ DP Gauge/ Draught gauges	Temperature Gauge	Level Gauge
1	Sensing Element and material	Bourdon for high pressure, Diaphragm/Bellow for low pr. Of 316 SS	Mercury in steel for below 450°C and inert gas actuated for above 450°C of SS bulb and capillary.	Tempered * toughened Borosilicate gauge glass steel armoured reflex or transparent type.
2	Body material	Die-cast aluminium	Die-cast aluminium	Forged carbon steel/304 SS
3	Dial size	150mm	150 mm	Tubular covering entire range
4	End connection	1/2 inch NPT (M)	3/4" NPT (M)	Process connection as per ASME PTC and drain/vent 15 NB
5	Accuracy	±1% of span	± 1% of span	± 2%
6	Scale	Linear, 270° arc graduated in metric units	Linear, 270° arc graduated in °C	Linear vertical
7	Range selection	Cover 125% of max. of scale	Cover 125% of max. of scale	Cover 125% of max. of scale
8	Over range test	Test pr. for the assembly shall be1.5 to the max. Design pr. at 38°C.		
9	Housing	Weather and dust proof as per IP-55	Weather and dust proof as per IP-55	CS/304 SS leak proof
10	Zero/span adjustment	Provided	Provided	--
11	Identification	Engraved with service legend or laminated phenolic name plate		

12	Accessories	Blow out disc, siphon, snubber, pulsation dampener, chemical seal (if required by process) gauge isolation valve	SS Thermowell	Gasket for all KEL-F shield for transparent type vent and drain valves of Steel/SS as per CS/Alloy process Requirement.
13	Material of Bourdon/ movement	316 SS / 304 SS	316 SS / 304 SS	

Notes:-

*Bicolour type level gauges will be provided for applications involving steam and water except for condensate and feed water services.

Length of gauge glass shall not be more than 1400 mm. If the vessel is higher, multiple gauge glasses with 50 mm overlapping shall be provided.

Where the process fluids are corrosive, viscous, solid bearing or slurry type, diaphragm seals shall be provided. Parts below the diaphragm shall be removable for cleaning. The entire volume above the diaphragm shall be completely filled with an inert liquid suitable for the application.

SUB–SECTION – B-17

ELECTRICAL ACTUATORS WITH INTEGRAL STA RTERS

1.00.00 CODES AND STANDARDS:

1.01.00 All standards, specifications and codes of practice referred to herein shall be the latest editions including all applicable official amendments and revisions. In case of conflict between this specification and codes, standards, etc, the former shall prevail.

2.00.00 ELECTRIC ACTUATORS WITH INTEGRAL STARTERS

2.01.00 TYPE:

2.01.01 The actuators shall have integral starters along with over load relays with built in SPP (Single Phasing Preventer). Alternatively Smart non intrusive actuators are also acceptable. A 415, 3 phase 3 wire power supply shall be given to the actuator from switch board as applicable through a switch fuse unit. Control voltage of the motor starter shall be 110 V AC / 24 V DC, derived suitably from 415V power supply.

2.01.02 In case supplier's standard control voltage for Open/Close contactors is 110V AC, the same is acceptable if suitable Opto Isolation circuit is provided with coupling relays for 24 V DC command inputs.

2.02.00 INTERFACES:

2.02.01 Open/Close command termination logic with position & torque Limit Switches, positioner circuit shall be suitably built in the PCB inside the actuator.

(a) For Binary Drive (both ON-OFF and INCHING type) :- Open/Close command & status thereof and disturbance monitoring signal (common contact for Overload, Thermostat, control supply failure, L/R selector switch at local & other protections operated) shall be provided.

Interface with the control system shall be through hardware signal only. Inter posing relays provided (with coil burden 2.5 VA) in the actuator shall be energized to initiate opening and closing, by 24V DC signal from the external control system.

(b) For Modulating Drive:- the command to actuator shall be in form of 4-20mA signal. The necessary positioning circuit and motor protection shall be provided

(c) Open/close command termination logic shall be suitably built inside actuator.

2.03.00 RATING :

(a) Supply Voltage & frequency: 415V +/- 10%, 3 Phase, 3 Wire 50HZ +/-5%.

(b) Sizing:-

Open/Close at rated speed against designed differential pressure at 90% of rated voltage.

For isolating service:- Three successive open-close operations or 15 mins, whichever is higher. For regulating service 150 starts per hour or required cycles, whichever is higher.

2.04.00 CONSTRUCTION:

(a) Enclosure:

Totally enclosed weatherproof minimum IP-55 degree of protection.

(b) Gear Train :

Metal (Fibre gears are not acceptable)) self-locking to prevent drift under torque switch (where ever applicable) spring pressure when motor is de-energized.

(c) Manual Wheel:

Shall disengage automatically during motor operation.

2.05.00 **MOTOR :**

(a) Type :

Squirrel cage induction motor suitable for Direct On Line (DOL)starting.

(b) Enclosure:

Totally enclosed, self ventilated IP-55 degree of protection.

(c) Insulation

Class B or better. Temperature rise 70 Deg C. over 50 Deg C ambient

(d) Bearings:

Double shielded, grease lubricated antifriction.

(e) Earth Terminals:

Two

(f) Protection:

Single Phasing Protection, Over heating protection through Thermostat (as applicable) and wrong phase sequence protection shall be provided over and above other protection features standard to bidder's design Suitable means shall be provided to diagnose the type of fault locally.

2.06.00 **POSITION/TORQUE SWITCHES:**

2.06.01 Four nos. (2 each in open and close position) position limit switches/contacts and two nos. (one in open and other in close direction) torque switches/contacts each having two nos. NO and two nos. NC contacts shall be provided.

Torque switches/contacts shall be bypassed in both the end positions with the other end Limit switches/contacts.

Limit switches/contacts

Limit switches shall be Silver plated with high conductivity and non –corrosive type. Contact rating shall be sufficient to meet the requirement of Control System subject to a minimum of 60 V, 6 VA rating. Protection class shall be IP-55.

Limit switch/contacts and disturbance signals shall be available to DCS even when the power supply to the actuators is not available.

2.07.00 LOCAL OPERATION:

2.07.01 It shall be possible to operate the actuator locally also. Lockable local/remote selection shall be provided on the actuator.

2.08.00 POSITION INDICATOR :

2.08.01 To be provided for 0 to 100% travel.

2.09.00 POSITION TRANSMITTER (FOR MODULATING/INCHING TYPE) :

2.09.01 As required. Suitable for stabilized 4-20 mA signal, 2 wire inductive type, External 24 volts DC operated.

2.10.00 WIRING :

2.10.01 Suitable voltage grade copper wire.

2.11.00 TERMINAL BOX :

(i) 9 pin plug and socket (1 no. per actuator to suit 4 pair 0.5 sq.mm. copper overall shielded (16 mm OD), instrumentation cable) suitably mounted in the starter box itself to terminate open/close command and status feedback signals with external control systems.

(ii) Additional one number 9 pin plug and socket (to suit 4 pair 0.5 sq.mm copper (16 mm OD) individual and overall shielded instrumentation cable) suitably mounted in the starter box itself for actuators with 4-20 mA position transmitters.

(iii) Necessary glands for power cables shall be provided.

2.12.00 TERMINAL BLOCK :

2.12.01 650V grade. For power cables.

2.13.00 SPACE HEATER :

2.13.01 Space heater of suitable rating. The supply shall be derived from the main power supply available in the actuator.

2.14.00 TYPICAL WIRING DIAGRAM :

2.14.01 Refer Tender Drawing No. 0000-999-POI-A-063.

DATA SHEETS FOR MOTORISED VALVE ACTUATOR

FORM NO. PEM-6666-0

	SPECIFICATION FOR MOTORISED VALVE ACTUATOR	REV. NO. 01	DATE: 11.05.2018
		SHEET 1 OF	4

Data Sheet A & B

DATA SHEET-A (TO BE FILLED BY PURCHASER)			DATA SHEET-B (TO BE FILLED-UP BY BIDDER)
GENERAL*	* PROJECT	3 x 800 MW PATRATU TPP	
	OFFER REFERENCE		
	* TAG NO. SERVICE		
	* DUTY	☐ ON / OFF ☐ INCHING	
	* LINE SIZE (inlet/outlet): MATERIAL		
	* VALVE TYPE	☐ GLOBE ☐ GATE ☐ REG. GLOBE ☐ BUTTERFLY	
	* OPENING / CLOSING TIME		
	* WORKING PRESSURE		
	AMBIENT CONDITION	SHALL BE SUITABLE FOR CONTINUOUS OPERATION UNDER AN AMBIENT TEMP. OF 0-55 DEG C AND RELATIVE HUMIDITY OF 0-95%	
	VALVE SEAT TEST PRESS	BIDDER TO SPECIFY	
	REQUIRED VALVE TORQUE	BIDDER TO SPECIFY	
	ACTUATOR RATED TORQUE	BIDDER TO SPECIFY	
CONSTRUCTION AND SIZING	CONSTRUCTION	TOTALLY ENCLOSED, WEATHER PROOF, IP:55	
	MECHANICAL POSITION INDICATOR	TO BE PROVIDED FOR 0-100% TRAVEL	
	BEARINGS	DOUBLE SHIELDED, GREASE LUBRICATED ANTI-FRICTION.	
	GEAR TRAIN FOR LIMIT SWITCH/TORQUE SWITCH OPERATION	METAL (NOT FIBRE GEARS). SELF-LOCKING TO PREVENT DRIFT UNDER TORQUE SWITCH SPRING PRESSURE WHEN MOTOR IS DE-ENERGIZED.	
	SIZING	OPEN/CLOSE AT RATED SPEED AGAINST DESIGNED DIFFERENTIAL PRESSURE AT 90% OF RATED VOLTAGE. FOR ISOLATING SERVICE THREE SUCCESSIVE OPEN-CLOSE OPERATIONS OR 15 MINS. WHICHEVER IS HIGHER. **FOR INCHING /REGULATING SERVICE - 150 STARTS/HR MINIMUM.**	
HANDWHEEL	* REQUIRED	■ YES ☐ NO	
	* ORIENTATION	☐ TOP MOUNTED ☐ SIDE MOUNTED	
	*TO DISENGAGE AUTOMATICALLY DURING MOTOR OPERATION.		
ELECTRIC ACTUATOR	ACTUATOR MAKE/MODEL	BIDDER TO SPECIFY	
	MOTOR MAKE / MODEL / TYPE / RATING (KW)	BIDDER TO SPECIFY	
	@ MOTOR TYPE	SQUIRREL CAGE INDUCTION MOTOR, STARTING CURRENT LIMITED TO SIX TIMES THE RATED CURRENT-INCLUSIVE OF **I.S.** TOLERANCE	
	ACTUATOR APPLICABLE WIRING DIAGRAM	■ ENCLOSED (BIDDER TO CONFIRM) A: ☐ DRG. NO. 3-V-MISC-24227 R00 B: ☐ DRG. NO. 3-V-MISC-24550 R00 C: ☐ DRG. NO. 3-V-MISC-24283 R00 D: ☐ DRG. NO. 4-V-MISC-90271 R11 E: ☐ For Thyristor based Integral starter, Bidder/Vendor to furnish wiring diagram	
	COLOUR SHADE	■ BLUE (RAL 5012) ENAMEL ☐ …….	
	PAINT TYPE **(## Refer Notes)**	☐ ENAMEL ☐ EPOXY ☐ …….	
	SHAFT RPM	BIDDER TO SPECIFY	
	OLR SET VALUE	BIDDER TO SPECIFY	
	@ STARTING / FULL LOAD CURRENT	BIDDER TO SPECIFY	
	NO. OF REV FOR FULL TRAVEL	BIDDER TO SPECIFY	
	@ PWR SUPP TO MTR / STARTER	415V +/- 10 % , 3PH,3 W, AC 50 HZ +/- 5 %	
	@ CONTROL VOLTAGE REQUIREMENT	TO BE DERIVED FROM THE POWER SUPPLY TO THE STARTER ☐ 230 V ■ 110 V AC/24V DC	

Data Sheet A & B

DATA SHEET-A (TO BE FILLED BY PURCHASER)			DATA SHEET-B (TO BE FILLED-UP BY BIDDER)
	MOTOR BEARING WITH 2 EARTH TERMINALS	DOUBLE SHIELDED, GREASE LUBRICATED ANTI FRICTION	
	@ ENCLOSURE CLASS OF MOTOR	IP 67 FOR OUTDOOR & IP 55 FOR INDOOR(TOTALLY ENCLOSED SELF VENTILATED)	
	@ INSULATION CLASS	CLASS-F TEMP. RISE LIMITED TO CLASS-B	
	@ WINDING TEMP PROTECTION	■ THERMOSTAT (3 Nos.,1 IN EACH PHASE) ☐ ----------	
	SINGLE PHASE / WRONG PHASE SEQUENCE PROTECTION	REQUIRED	
INTEGRAL STARTER	INTEGRAL STARTER	■ REQUIRED ☐ NOT REQUIRED	
	TYPE OF SWITCHING DEVICE	■ CONTACTORS ☐ THYRISTORS	
	TYPE	■CONVENTIONAL ☐ SMART (NON-INTRUSIVE)	
	IF SMART	(NOT APPLICABLE)	
	a) SERIAL LINK INTERFACE	☐ INTEGRAL ☐ FIELD MOUNTED	
	b) SERIAL LINK PROTOCOL	☐ FOUNDATION FIELD-BUS ☐ PROFI-BUS ☐ DEVICE NET ☐.....	
	c) SERIAL LINK MEDIA	☐ TWISTED PAIR Cu-CBL ☐ CO-AXIAL Cu-CBL ☐ OFC	
	d) HAND HELD PROGRAMMER	☐ REQUIRED ☐ NOT REQUIRED	
	e) TYPE OF HAND HELD PROGRAMMER	☐ BLUETOOTH ☐ INFRARED ☐.....	
	f) MASTER STATION	☐ REQUIRED ☐ NOT REQUIRED	
	g) MASTER STN INTRFACE WITH DCS	☐ MODBUS ☐ TCP/IP	
	h) DETAILS OF SPECIAL CABLE	☐ ENCLOSED ☐ NOT REQUIRED	
	STEP DOWN CONT. TRANSFORMER	■ REQUIRED	
	OPEN / CLOSE PB	■ REQUIRED ☐ NOT REQUIRED	
	STOP PB	■ REQUIRED ☐ NOT REQUIRED	
	INDICATING LAMPS	■ REQUIRED ☐ NOT REQUIRED	
	LOCAL REMOTE S/S	■REQUIRED ☐ NOT REQUIRED	
	STATUS CONTACTS FOR MONITORING	■ REQUIRED ☐ NOT REQUIRED	
	INTEGRAL STARTER DISTURBED SIGNAL	REQUIRED (O/L RELAY OPERATED, CONT./POWER SUPPLY FAILED, S/S IN LOCAL, TORQUE SWITCH OPTD. MID WAY)	
INTERPOSING RELAY/OPTO COUPLER (Applicable for integral Starter)	TYPE OF ISOLATING DEVICE	■ INTERPOSING RELAY ☐ OPTO COUPLER ☐ EITHER	
	QUANTITY	■ 2 NOs. ☐ 3 NOs.	
	DRIVING VOLTAGE	■ 20.5 – 24V DC ☐ _____V DC	
	DRIVING CURRENT	■ 125mA MAX ☐ _____mA MAX	
	LOAD RESISTANCE	■ > 192 ohms - <25 k ohms ☐ > _____ohms - < _____ohms	
TORQUE SWITCH (Not Applicable for Smart Actuator) **($$ Refer Notes)**	MFR & MODEL NO.	BIDDER TO SPECIFY	
	OPEN / CLOSE	■1 No. ☐2Nos. / ■1 No. ☐2Nos	
	CONTACT TYPE	2 NO + 2 NC	
	RATING	5A 240V AC AND 0.5A 220V DC	
	CALIBRATED KNOBS(OPEN&CLOSE TS)	REQUIRED FOR SETTING DESIRED TORQUE	
	ACCURACY	+3% OF SET VALUE	
LIMIT SWITCH (Not Applicable for Smart Actuator) ($$	MFR & MODEL NO.	BIDDER TO SPECIFY	
	OPEN : INT : CLOSE	☐1 No ■2 Nos. / ☐1 No. ■2Nos.	
	CONTACT TYPE	2 NO + 2 NC	

FORM NO. PEM-6666-0

	SPECIFICATION FOR MOTORISED VALVE ACTUATOR	REV. NO. 01	DATE: 11.05.2018
		SHEET 3 OF 4	

Data Sheet A & B

DATA SHEET-A (TO BE FILLED BY PURCHASER)	DATA SHEET-B (TO BE FILLED-UP BY BIDDER)

Refer Notes)	RATING (AC / DC)	5A 240V AC AND 0.5A 220V DC	

Limit switches shall be silver plated with high conductivity and non-corrosive type. Contact rating shall be sufficient to meet the requirement of control system subject to a minimum of 60 V, 6 VA rating. Protection class shall be IP 55.

POSITION TRANSMITTER	POSITION TRANSMITTER (For inching duty applications)	■ REQUIRED ☐ NOT REQUIRED	
	MFR & MODEL NO.	BIDDER TO SPECIFY	
	TYPE	☐ELECTRONIC (2 WIRE) R/I CONVERTER ■ ELECTRONIC (2 WIRE) CONTACTLESS INDCUTIVE TYPE ,EXTERNAL 24 V DC OPERATED ,SUITABLE FOR STABILISED 4-20 mA SIGNAL	
	SUPPLY	■ 24V DC ☐ ……	
	OUTPUT	■ 4-20mA	
	ACCURACY	± 1% FS	
SPACE HEATER	@SPACE HEATER	REQUIRED	
	@ POWER SUPPLY (NON INTEGRAL)	230V AC,1 PH.,50 Hz	
	@ POWER SUPPLY (INTEGRAL)	POWER SUPPLY DERIVED FROM MAIN POWER SUPPLY AVAILABLE AT ACTUATOR END.	
	@ RATING		
TERMINAL BOX	ACTUATOR/MOTOR TERMINAL BOX	REQUIRED	
	ENCL CLASS ACTUATOR/MOTOR T.B.	■ IP 68 @☐……	
	@ EARTHING TERMINAL	REQUIRED	
	PLUG & SOCKET(9 PIN) (FOR COMMD, LS/TS FEED BACK, PoT)	■ REQUIRED ☐ NOT REQUIRED☐ ■ 2 NOS. PRE WIRED ☐ ----------	
CABLE GLANDS	@ POWER CABLE GLAND	SIZE:----------	
	@ SPACE HEATER CABLE GLAND	SIZE:----------	
	OTHER CONTROL CABLE GLANDS-1	2 NOS SUITABLE FOR 4P,0.5SQ MM	
	OTHER CONTROL CABLE GLAND	1 No. for BFV of CW PUMP(Cable size 2Px1.5mm2)	

FORM NO. PEM-6666-0

	SPECIFICATION FOR MOTORISED VALVE ACTUATOR	REV. NO. 01	DATE: 11.05.2018
		SHEET 4 OF 4	

Data Sheet A & B

DATA SHEET-A (TO BE FILLED BY PURCHASER)	DATA SHEET-B (TO BE FILLED-UP BY BIDDER)

WEIGHT	TOTAL WEIGHT (ACTUATOR + ACCESSORIES)	BIDDER TO SPECIFY	_____ Kg.

NOTES:

1. **SCOPE**: DESIGN, MANUFACTURE, INSPECTION, TESTING AND DELIVERY TO SITE OF ELECTRIC ACTUATOR FOR INCHING OR OPEN / CLOSE DUTY.
2. **CODES & STANDARDS**: DESIGN AND MATERIALS USED SHALL COMPLY WITH THE RELEVANT LATEST NATIONAL AND INTERNATION STANDARD. AS A MINIMUM, THE FOLLOWING STANDARDS SHALL BE COMPLIED WITH:
   IS-9334, IS-2147, IS-2148, IS-325, IS-2959, IS-4691 AND IS-4722
3. TEMPERATURE RISE SHALL BE RESTRICTED TO 70 DEG. C FOR AMBIENT TEMPERATURE OF 50 DEG C.
4. CABLE GLANDS OF DOUBLE COMPRESSION TYPE, BRASS MATERIAL SHALL BE PROVIDED.
5. THE TORQUE SWITCHES SHALL BE PROVIDED WITH MECHANICAL LATCHING DEVICE TO PREVENT OPERATION WHEN UNSEATING FROM THE END POSITIONS. THE LATCHING DEVICE SHALL UNLATCH AS SOON AS THE VALVE LEAVES THE END POSITION. IF SUCH PROVISION IS NOT POSSIBLE, THE TORQUE SWITCHES SHALL BE BYPASSED BY END-POSITION LIMIT SWITCHES WHICH OPENS ON VALVE LEAVING END POSITION.THESE LIMIT SWITCHES ARE ADDITIONAL TO THE NUMBER OF LIMIT SWITCHES SPECIFIED ELSEWHERE.
6. THE MOTOR SHALL OPERATE SATISFACTORILY UNDER THE +/- 10% SUPPLY VOLTAGE VARIATION AT RATED FREQUENCY, -5% TO +3% VARIATION IN FREQUENCY AT RATED SUPPLY VOLTAGE, SIMULTANEOUS VARIATION IN VOLTAGE & FREQUENCY THE SUM OF ABSOLUTE PERCENTAGE NOT EXCEEDING 10%.
7. THE MOTOR SHALL BE SUITABLE FOR DIRECT ON LINE STARTING.

$$ TORQUE SWITCH & LIMIT SWITCH SHALL ACT INDEPENDENT OF EACH OTHER. TANDEM OPERATION IS NOT ACCEPTABLE.

EPOXY PAINT IS RECOMMENDED FOR COASTAL AREAS.

8. IT SHALL BE POSIIBLE TO OPERATE THE ACTUATOR LOCALLY. LOCKABLE LOCAL/REMOTE SELECTION SHALL BE PROVIDED ON THE ACTUATOR.
9. POSITION INDICATOR SHALL BE PROVIDED FOR 0 TO 100 % TRAVEL
10. WIRING SHALL BE SUITABLE VOLTAGE GRADE COPPER WIRE.

.

	PREPARED BY	CHECKED BY	APPROVED BY	VENDOR COMPANY SEAL
NAME	Madhav gupta	Mayank kesharwani	Bharat Singh	NAME
SIGNATURE				SIGNATURE
DATE	01.03.02018 01.	03.2018	01.03.2018	DATE

NOTES* = TO BE FILLED BY MPL (LEAD AGENCY). @= TO BE FILLED BY ES

ALL DIMENSIONS ARE IN MILLIMETRES. FOR TOLERANCES OF UNTOLERANCED DIMENSIONS DURING MANUFACTURE REFER RELEVANT QCP / QP.

DRAWING NO. 3-V-MISC-24283

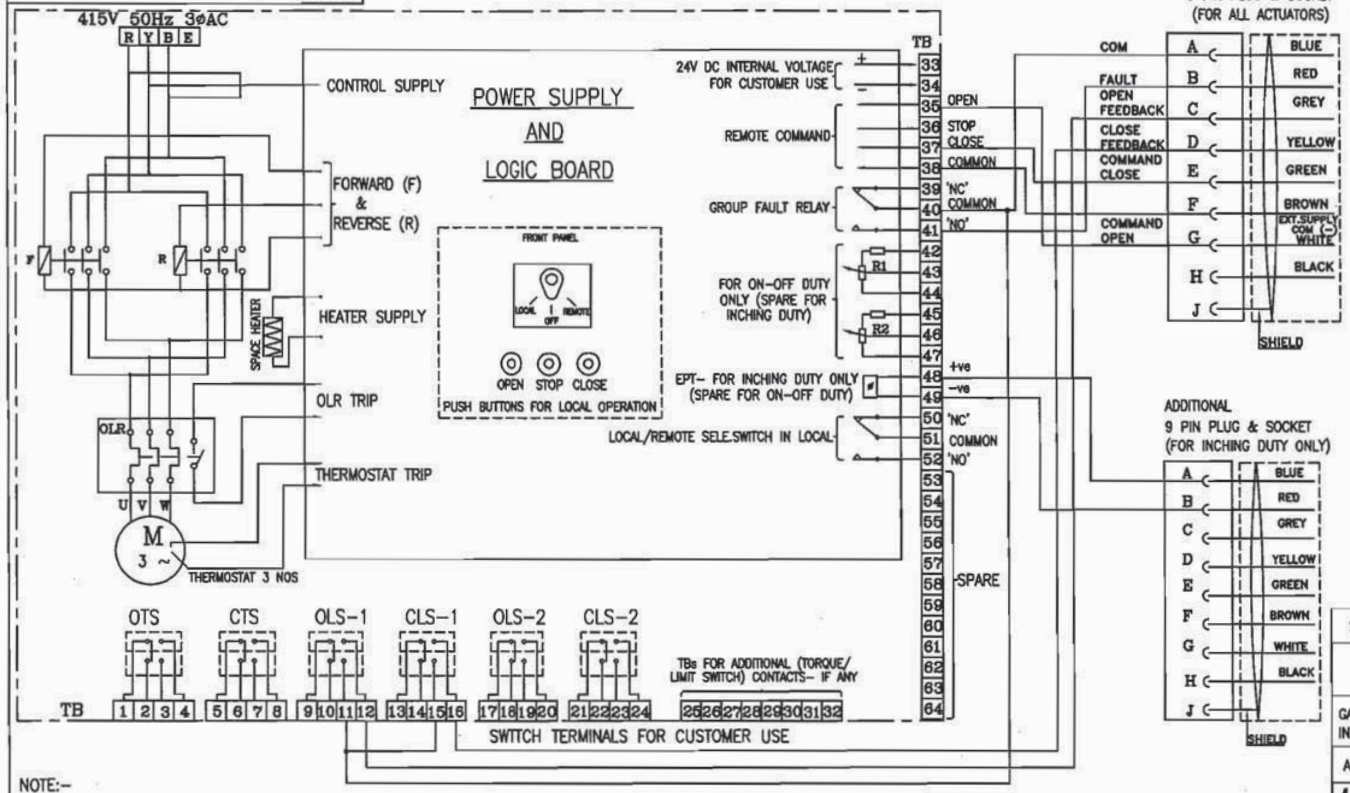

CONTACT DEVELOPMENT DIAGRAM

OTS	1-2	OPEN AT OVER TORQUE DURING OPENING TRAVEL				
	3-4	CLOSE AT OVER TORQUE DURING OPENING TRAVEL				
CTS	5-6	OPEN AT OVER TORQUE DURING CLOSING TRAVEL				
	7-8	CLOSE AT OVER TORQUE DURING CLOSING TRAVEL				
OLS-1	9-10					
	11-12					
CLS-1	13-14					
	15-16					
OLS-2	17-18					
	19-20					
CLS-2	21-22					
	23-24					
SWITCH	TERMINAL NO.	FULL OPEN	a	INTERMEDIATE	b	FULL CLOSE
		VALVE POSITION				

INDICATES CONTACT CLOSED

INDICATES CONTACT OPEN

CONTACT RATING: 5A AT 250V AC & 0.5A AT 220V DC

SETTING PROCEDURE OF POSITION LIMIT AND TORQUE SWITCH

VALVES	OPEN		CLOSE	
	MAIN	BACK UP	MAIN	BACK UP
GATE VALVE OF100 mm AND ABOVE IN 1500 CL AND ABOVE RATINGS	OLS	OTS *	CLS	CTS
ALL OTHER GATE & GLOBE VALVES	OLS	OTS *	CTS	#

– CLS NOT TO BE CONNECTED IN TRIP CIRCUIT

* – BYPASS OTS FOR INITIAL 5% OF TRAVEL(FOR GATE VALVES ONLY)

NOTE:-

1. ALL TORQUE AND LIMIT SWITCHES (OTS,CTS,OLS1&2, CLS1&2) ARE WITH 2NO+2NC CONTACTS '1NO+1NC' IS TERMINATED IN TBS 1-24, REMAINING CONTACTS ARE FOR INTERNAL USE. ANY SPARE CONTACTS WHICH ARE NOT USED INTERNALLY ARE TO BE TERMINATED IN TBS 25-32
2. CTS – TORQUE SWITCHES FOR CW ROTATION (CLOSE)
3. OTS – TORQUE SWITCHES FOR CCW ROTATION (OPEN)
4. OLS-1, OLS-2 – LIMITSWITCHES FOR POSITION OPEN
5. CLS-1, CLS-2 – LIMITSWITCHES FOR POSITION CLOSE
6. EPT – ELECTRONIC POSITION TRAMSMITTER (CONTACTLESS TYPE, FOR INCHING DUTY)
7. R1-R2-POTENTIOMETER 2 x 100 OHMS (FOR ON-OFF DUTY)
8. FOR COMMANDS & EPT EITHER INTERNALLY GENERATED 24 VDC OR EXTERNAL SUPPLY OF 24VDC CAN BE USED
9. M – MOTOR 3ø 415V 50 Hz AC SUPPLY
10. TORQUE SWITCH BYPASS WITH LIMITSWITCH BOTH ON OPEN & CLOSE DIRECTION TO BE DONE INTERNALLY.

REV	DATE	ALTERED
		CHD & APPD

CAUTION: The information on this document is the property of BHARAT HEAVY ELECTRICALS LTD. It must not be used directly or indirectly in any way detrimental to the interest of the company.

TYPE OF PRODUCT OR NAME OF CUSTOMER/PROJECT: ELECTRICAL VALVE ACTUATORS (AC) WITH INTEGRAL STARTERS FOR NTPC PROJECTS (DRAWN FOR INTERMEDIATE POSITION OF VALVES)

BHARAT HEAVY ELECTRICALS LTD., UNIT: HIGH PRESSURE BOILER PLANT. TIRUCHIRAPALLI-620014.

365-121

	NAME	SIGN	DATE	NO.OF VAR.
DRN	N.P.ESWAR	N.P	17.03.05	–
CHD	D.DINAKARAN	D.D	17.03.05	
APPD	K.ARUNACHALAM	K.A	17.03.05	

DEPT	SCALE	WEIGHT (KG).	REFERENCE INFORMATIONS	NO. OF SHEETS
VL	NTS	–		–
CODE –				

TITLE: WIRING DIAGRAM (TERMINAL PLAN) FOR ACTUATOR WITH INTEGRAL STARTER WITH PLUG & SOCKET FOR NTPC PROJECTS

CARD CODE: U 01

DRAWING NO. 3-V-MISC-24283 Page 6 of 6

REV 0

Size A3

SIGNL EXCHANGE BETWEEN DRIVES & DCS

DCS INTERFACE FOR (BIDIRECTIONAL DRIVE WITH INTEGRAL STARTER) (BID/BIDI)

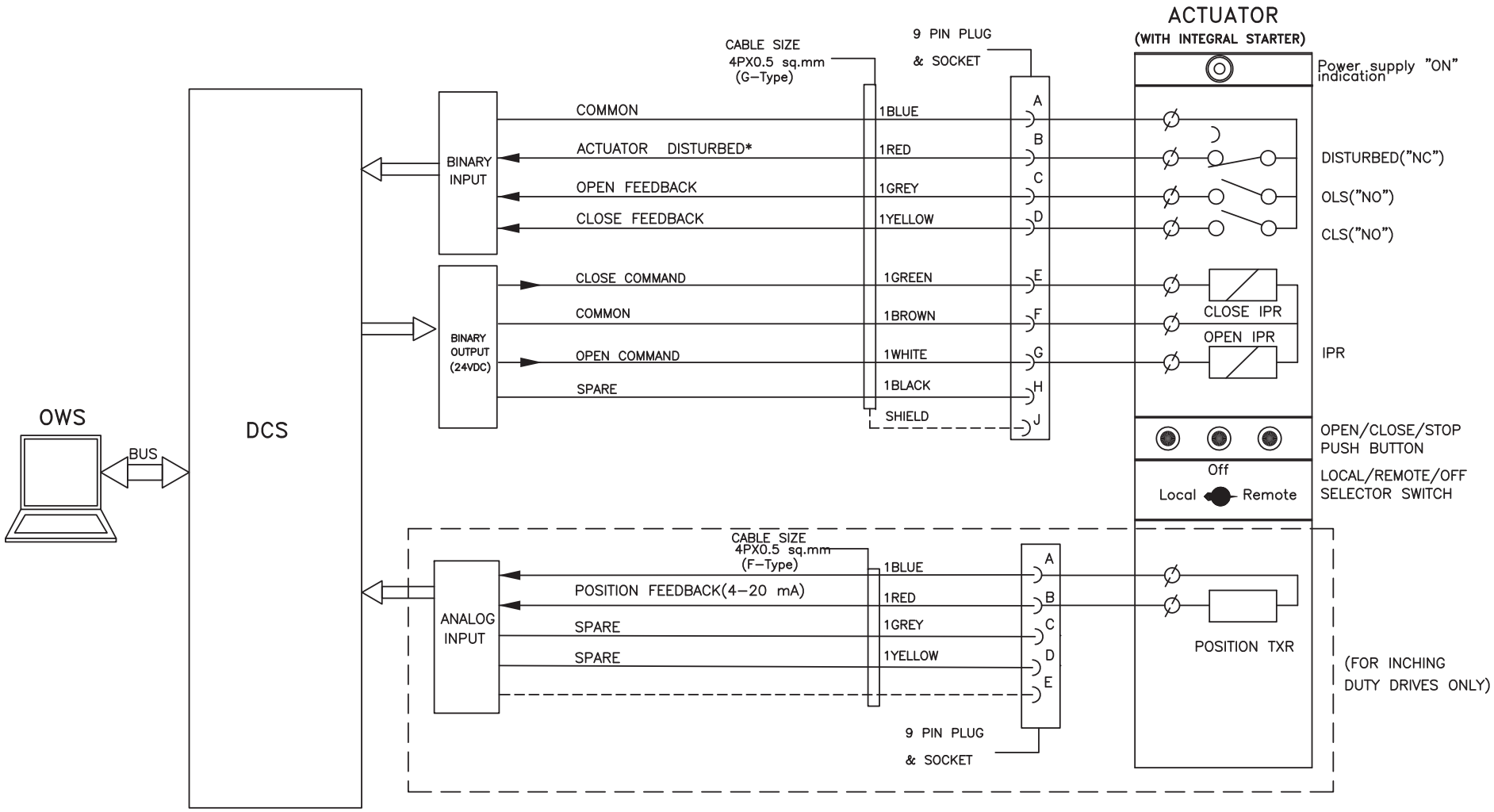

NOTE:

* DISTURBED= Loss of Power supply (1 Phase/3 Phase)/
Loss of control supply/ Motor thermostat trip/
Thermal over load/
Local/Off/Remote Sel. switch in local or off mode/

BHEL	PROJECT: PATRATU STPP	DRG.NO.	PE–DM–434–145–I002
		DATE	04.09.2017
	TITLE DDCMIS INTERFACE FOR BIDIRECTIONAL DRIVE	REV.NO.	00
		SHT	7

DCS INTERFACE FOR UNIDIRECTIONAL LT DRIVE (CONTACTOR CONTROLLED) (LTUD)

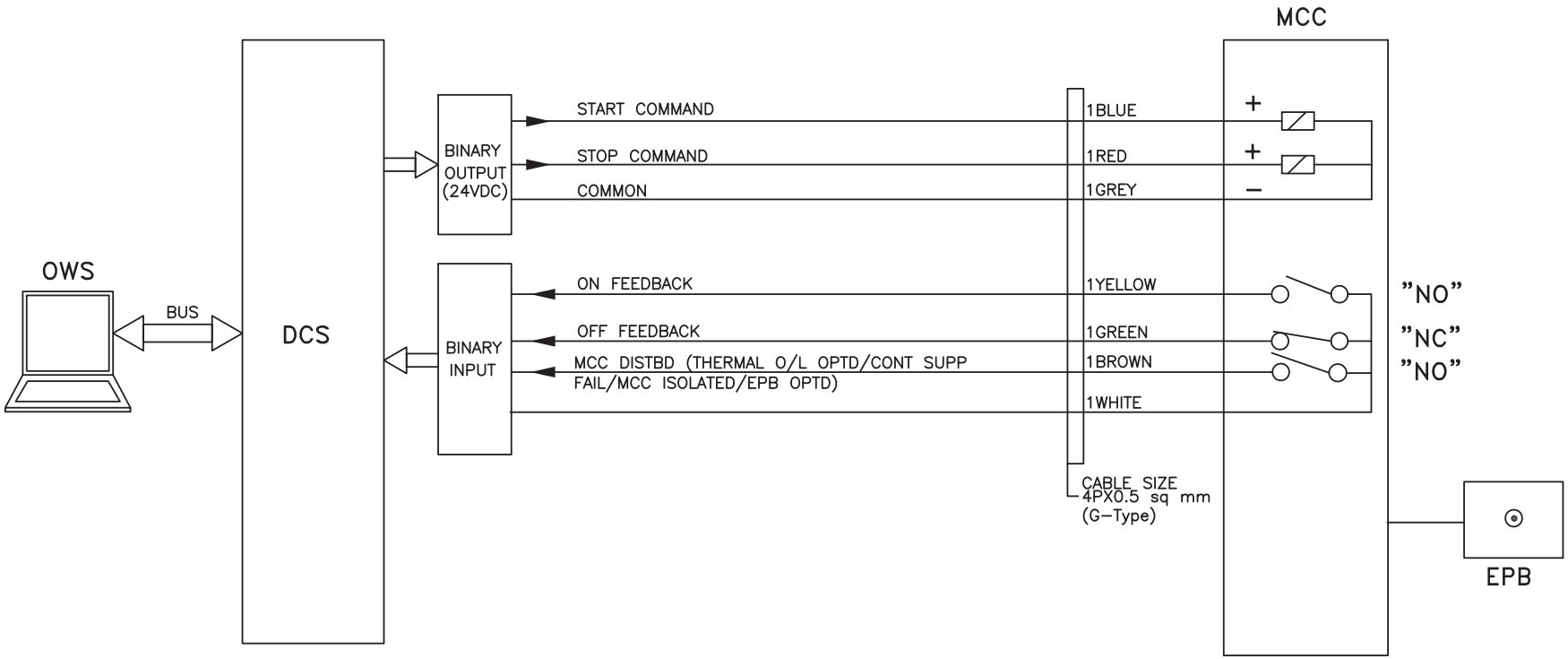

BHEL	PROJECT: PATRATU STPP	DRG.NO.	PE-DM-434-145-I002
		DATE	04.09.2017
	TITLE DDCMIS INTERFACE FOR UNIDIRECTIONAL LT DRIVE	REV.NO.	00
		SHT	08 OF 13

DCS INTERFACE FOR SOLENOID DRIVE (SOLV)
(24V DC / 240V AC UPS)

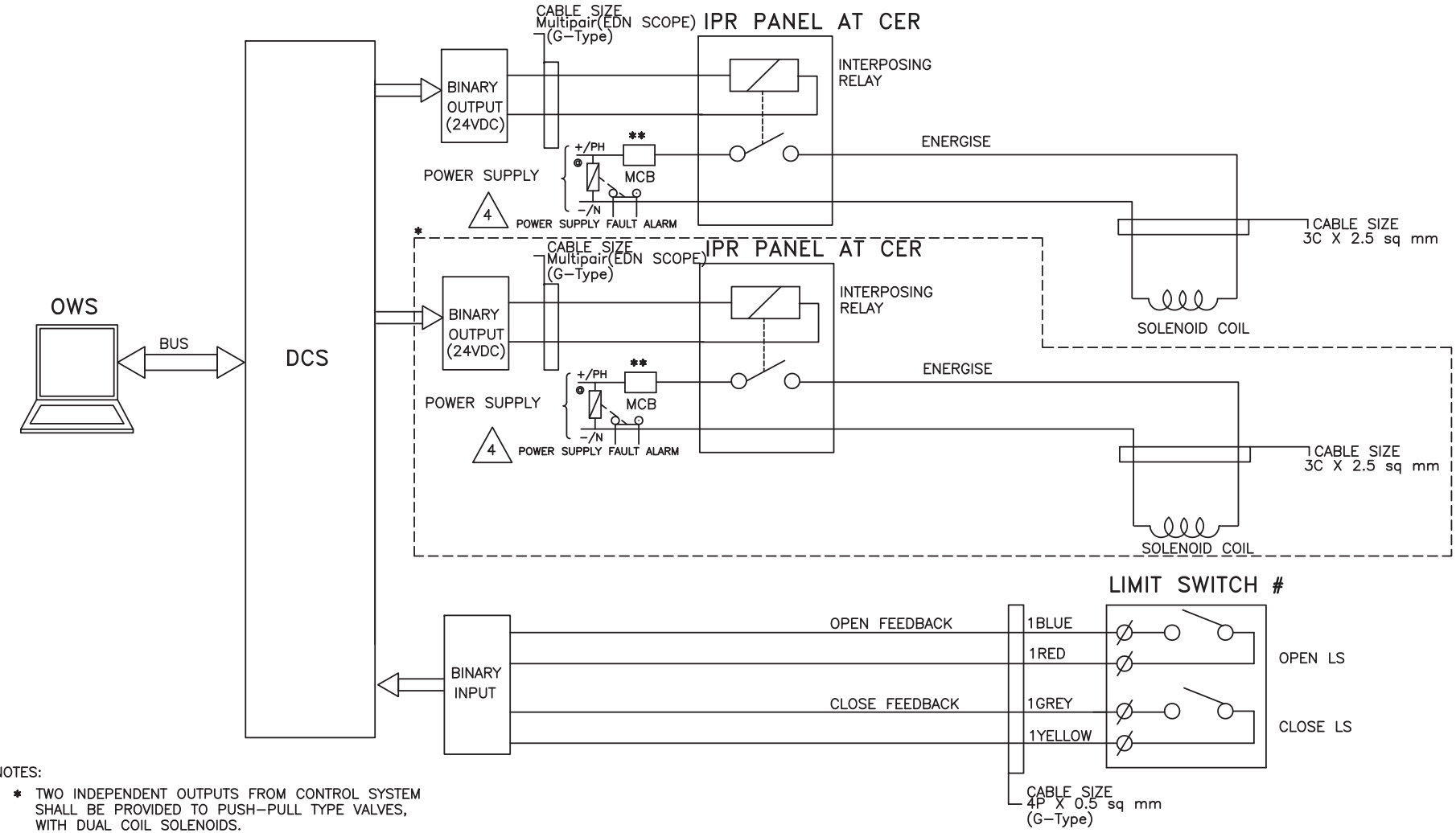

NOTES:

- * TWO INDEPENDENT OUTPUTS FROM CONTROL SYSTEM SHALL BE PROVIDED TO PUSH-PULL TYPE VALVES, WITH DUAL COIL SOLENOIDS.
- ** MCB SHALL BE PROVIDED FOR EACH SOLENOID
- # FOR ON/OFF TYPE, SOLENOID ACTUATED CONTROL VALVE.
- @ COMMON FOR ALL SOLENOID VALVES

BHEL	PROJECT: PATRATU STPP	DRG.NO.	PE-DM-434-145-I002
		DATE	04.09.2017
	TITLE DDCMIS INTERFACE FOR SOLENOID DRIVE	REV.NO.	00
		SHT	9

DCS INTERFACE FOR HT/LT UNIDIRECTIONAL DRIVES (BREAKER OPERATED) (HTUD/LTUD)

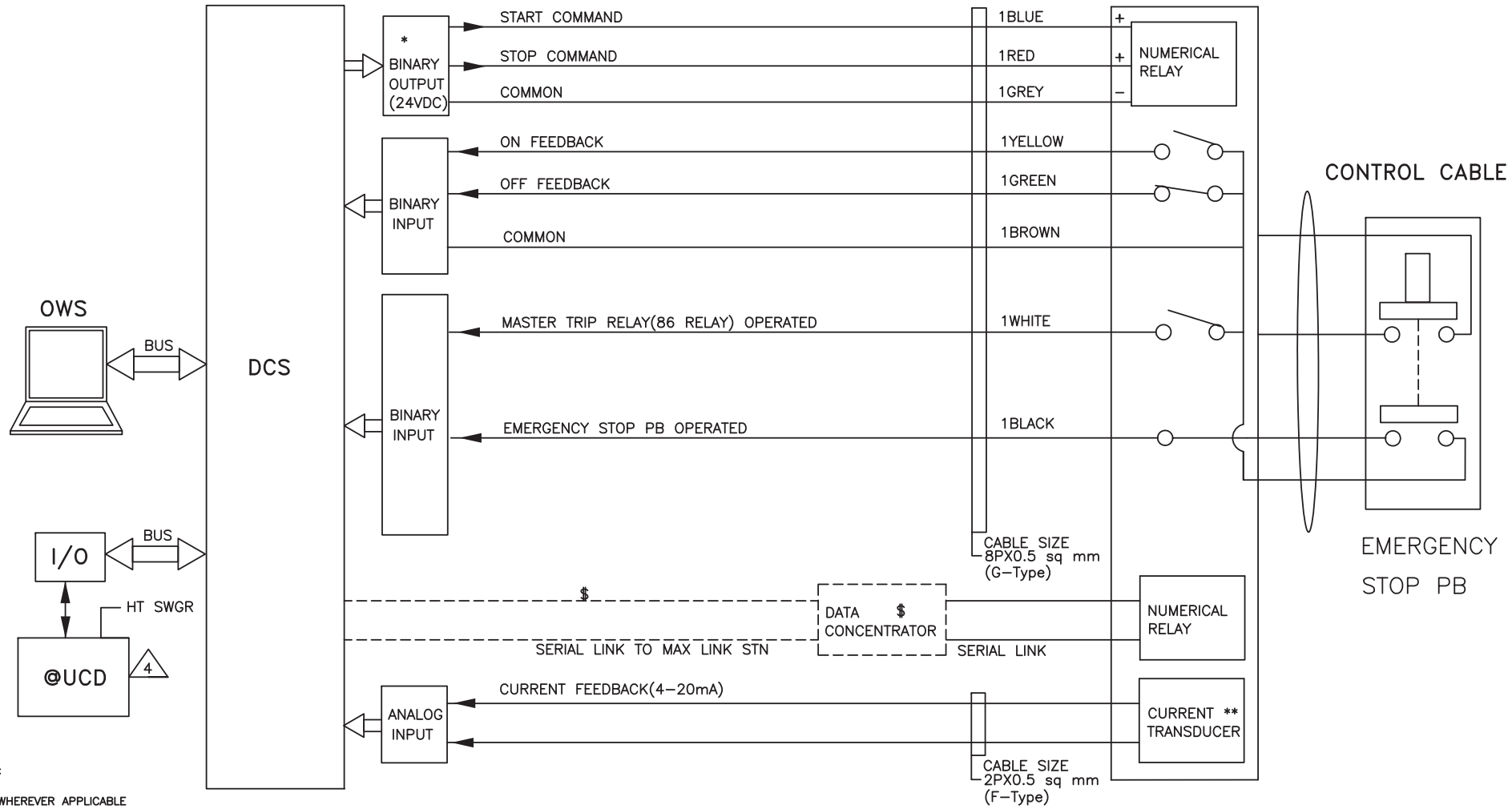

NOTE:

@ WHEREVER APPLICABLE

* REDUNDANCY SHALL BE PROVIDED AS PER CLAUSE NO. 1.02.00 , NOTE NO. 4, CONTRACT QTY. FOR DDCMIS, APPENDIX−I TO PART−A OF TECHNICAL SPECIFICATION

$ DATA CONCENTRATOR & SERIAL LINK TO MAX STATION SHALL BE COMMON FOR HT/LT DRIVES (BREAKER CONTROLLED)

** SHALL BE APPLICABLE FOR FD, ID, PA, BFP, CEP, ECW, ACW, MILL MOTORS

1. EXACT NO. OF PORTS/LINKS BETWEEN NUMERICAL RELAYS & MAX LINK STATION SHALL BE AS PER THE APPROVED SWGR & DATA CONCENTRATOR DRAWINGS.
2. OVERLOAD ALARM, RELAY FAULT, SWGR AVAILABLE & SWGR DISTURBED SIGNALS ALONG WITH OTHER INFORMATION SHALL FLOW THROUGH SOFT LINK.

BHEL	PROJECT: PATRATU STPP	DRG.NO.	PE−DM−434−145−I002
		DATE	04.09.2017
	TITLE DDCMIS INTERFACE FOR UNIDIRECTIONAL HT DRIVE	REV.NO.	00
		SHT	10

DCS INTERFACE FOR ANALOG DRIVE (MOD-P)

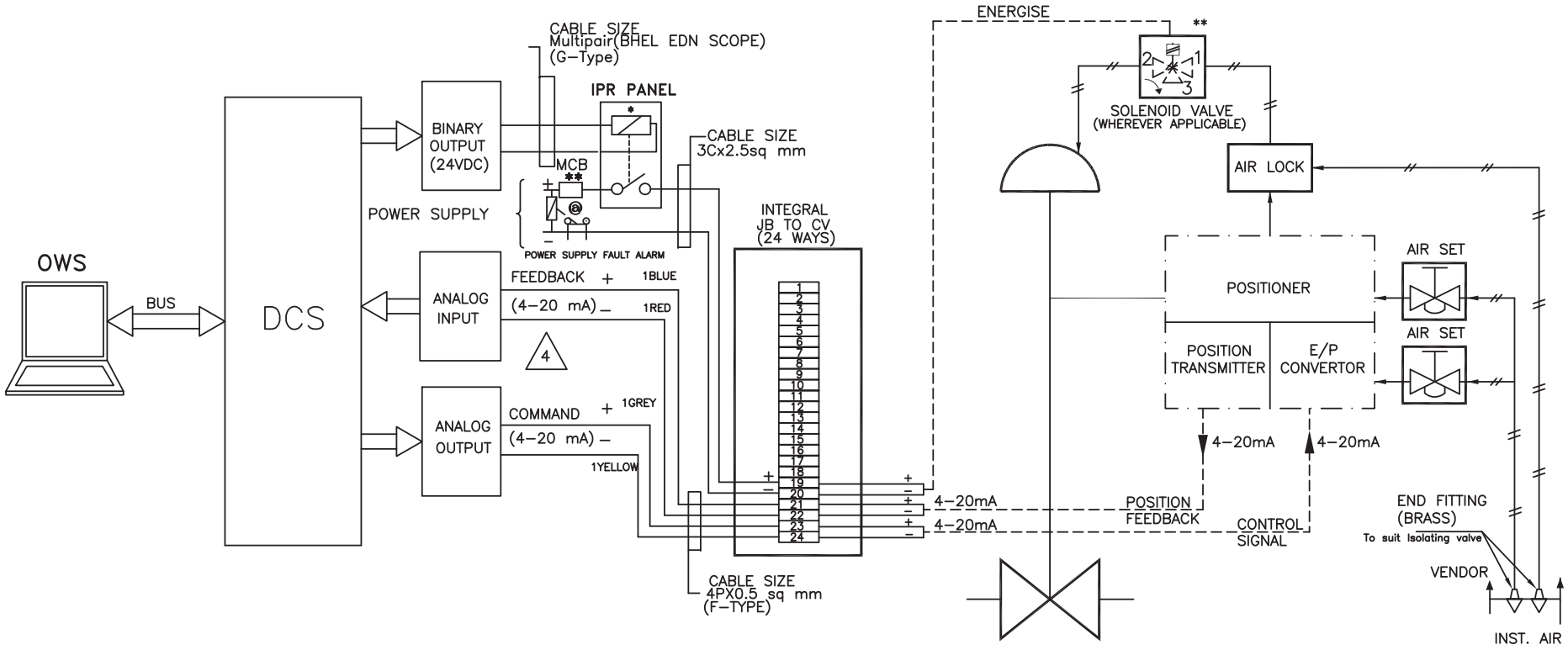

NOTES:

* APPLICABLE TO VALVES WHERE PROTECTION OPEN/CLOSE ACTION FOR CONTROL DEMAND OVERRIDING IS REQUIRED.

** MCB SHALL BE PROVIDED FOR EACH SOLENOID

@ COMMON FOR ALL SOLENOIDS

BHEL	PROJECT: PATRATU STPP	DRG.NO.	PE-DM-434-145-I002
		DATE	04.09.2017
	TITLE TYPICAL HOOK-UP DIAGRAM ANALOG DRIVE	REV.NO.	00
		SHT	11

DCS INTERFACE FOR MODULATING TYPE PNEUMATIC DAMPER

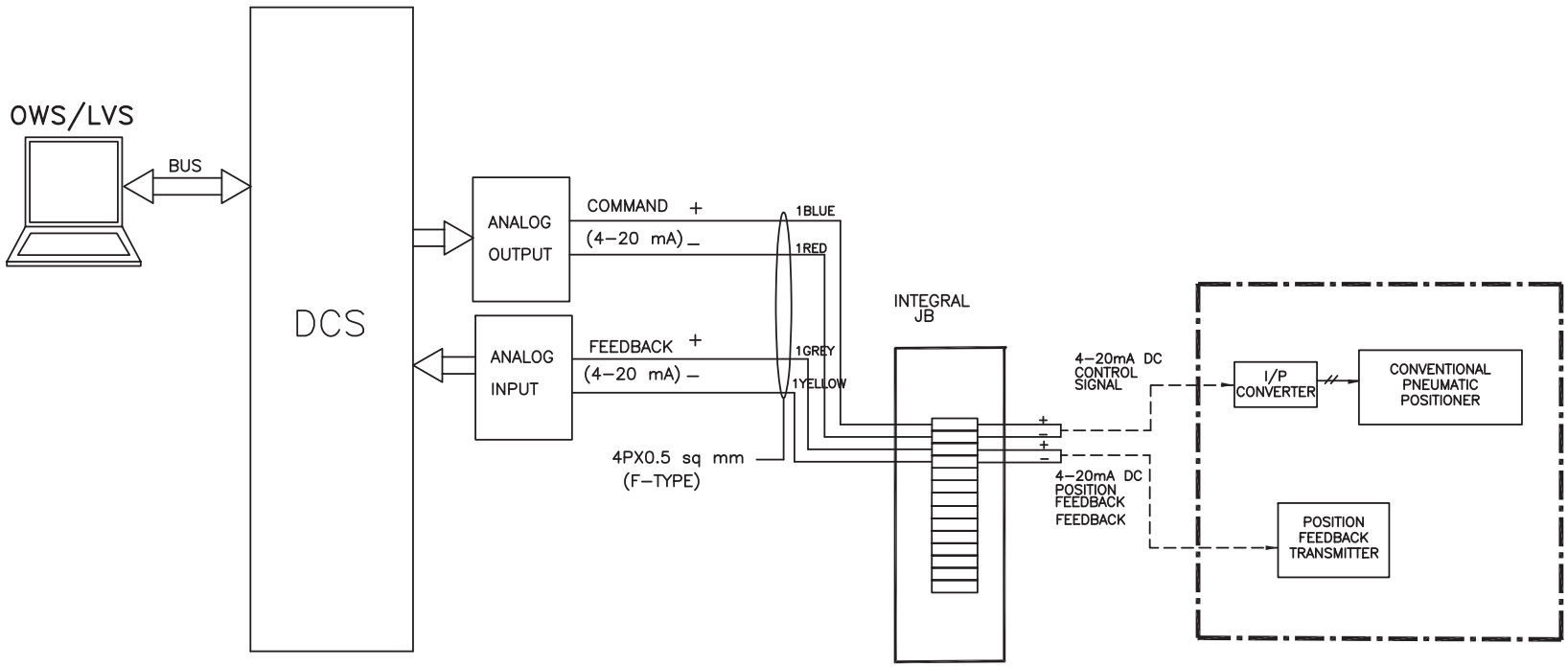

भेल BHEL	PROJECT: PATRATU STPP	DRG.NO.	PE–DM–434–145–I002
		DATE	04.09.2017
	TITLE DCS INTERFACE FOR MODULATING TYPE PNEUMATIC DAMPER	REV.NO.	00
		SHT	12

DCS INTERFACE FOR ANALOG DRIVE (MOD-E)

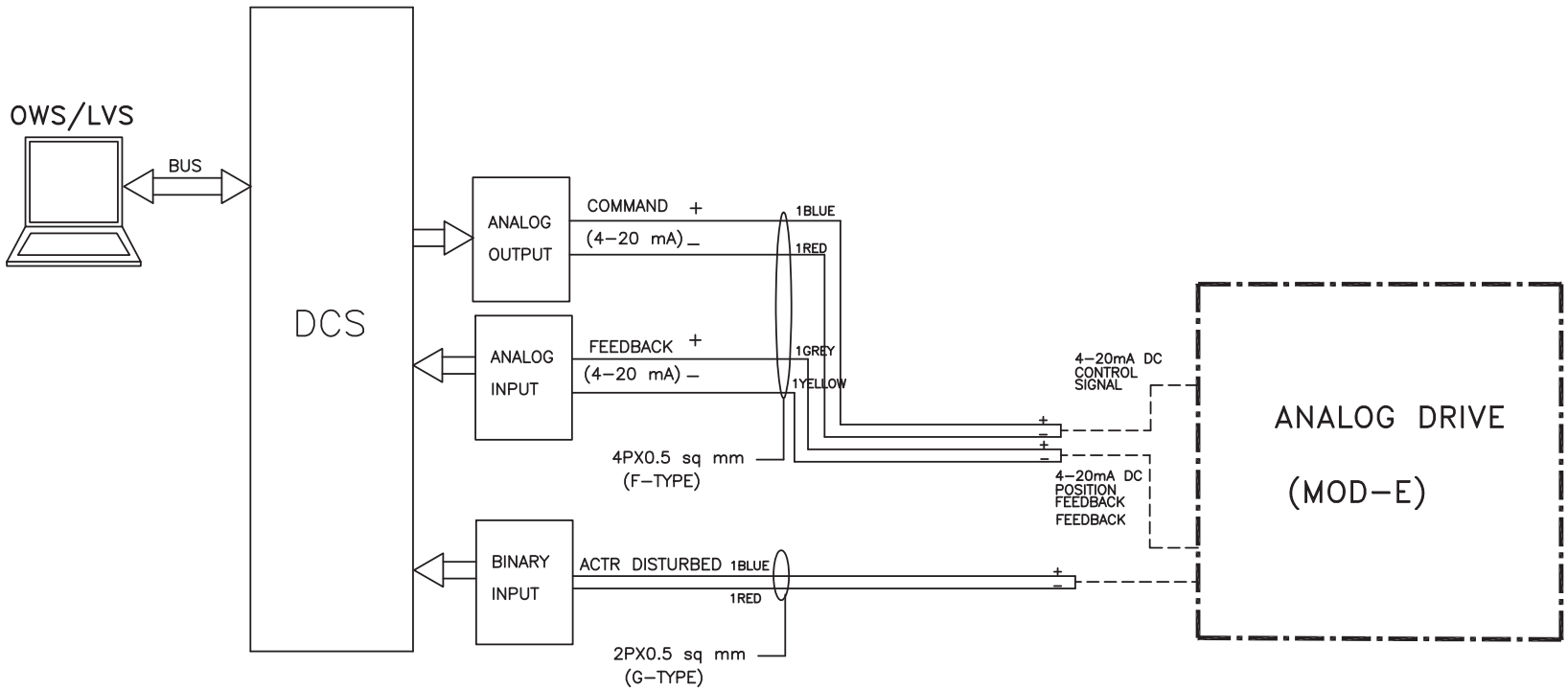

BHEL	PROJECT: PATRATU STPP	DRG.NO.	PE-DM-434-145-I002
		DATE	04.09.2017
	TITLE DCS INTERFACE FOR ANALOG DRIVE MODULATING ELECTRIC TYPE	REV.NO.	00
		SHT	13

DRIVE & INSTRUMENT INTERFACE DIAGRAM

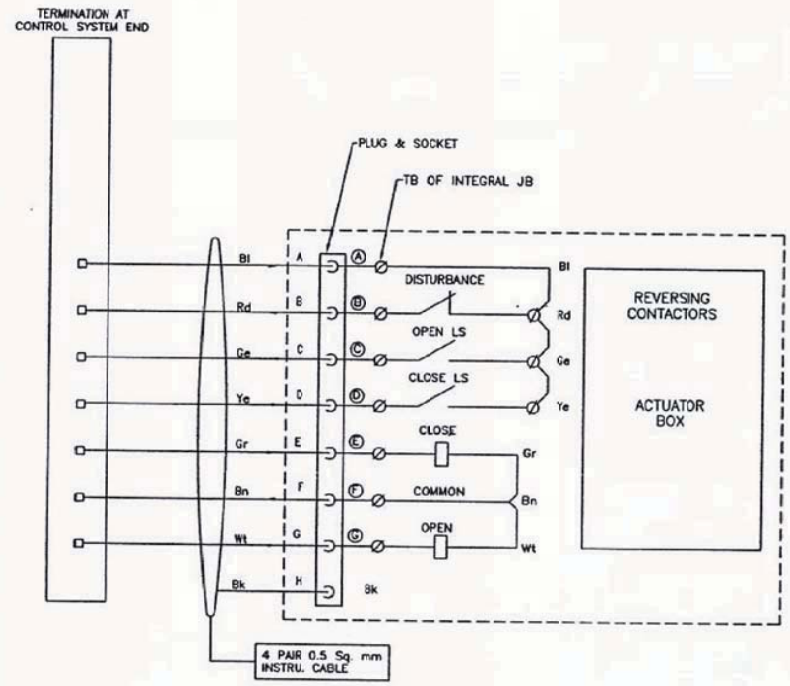

This document is the property of NATIONAL THERMAL POWER CORPORATION LTD.
No part of this document will be reproduced by any means without the written permission.

FOR TENDER PURPOSE ONLY

एन टी पी सी NTPC

एन टी पी सी लिमिटेड
N T P C LIMITED
(A GOVERNMENT OF INDIA ENTERPRISE)
ENGINEERING DIVISION

PROJECT: TYPICAL THERMAL POWER PROJECT

TITLE: INTERFACING OF ACTUATORS

REV.NO.	DESCRIPTION	DRAWN	DESIGN	CHKD.	M	E	C	C&I	ARCH.	APPD	DATE
A	FIRST ISSUE										28.04.06

CLEARED BY

SIZE	SCALE	DRG. NO.	REV. NO.
A3	N.T.S.	0000-999-POI-A-063	A

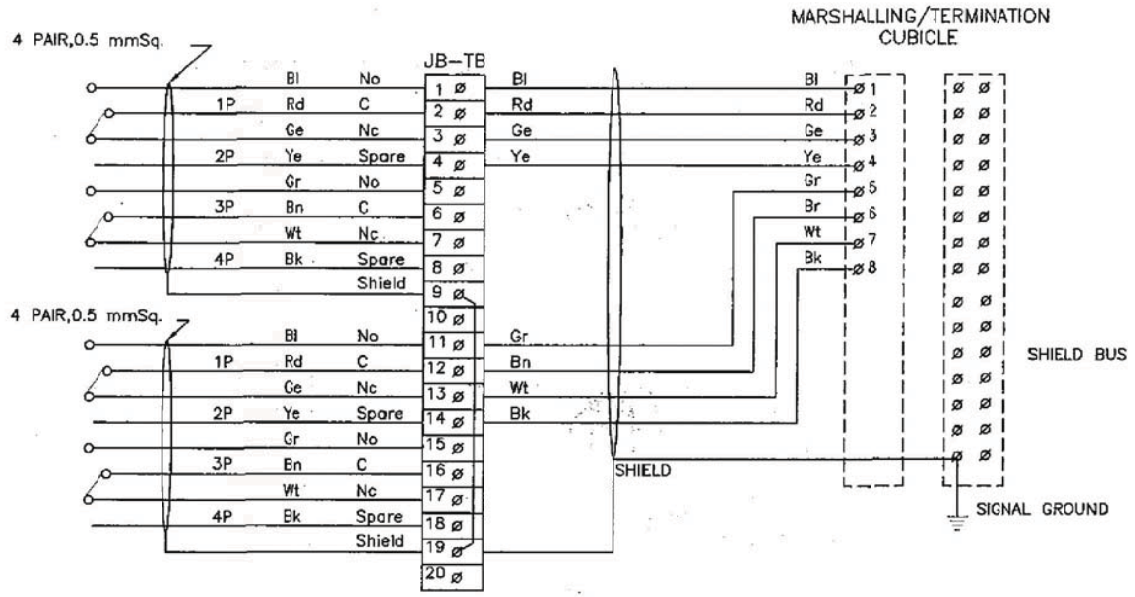

FOR TENDER PURPOSE ONLY

एन टी पी सी लिमिटेड
NTPC LIMITED
(A GOVERNMENT OF INDIA ENTERPRISE)
ENGINEERING DIVISION

PROJECT: TYPICAL THERMAL POWER PROJECT

TITLE: INTERFACING OF FIELD INSTRUMENTS/ SWGR SWITCH (COC) TERMINATION DETAILS

REV.NO.	DESCRIPTION	DRAWN	DESIGN	CHKD.	M	E	C	C&I	ARCH.	APPD	DATE
A	FIRST ISSUE										29.04.06

CLEARED BY

SIZE	SCALE	DRG. NO.	REV. NO.
A3	NTS	0000-999-POI-A-065 SH 01 OF 14	A

This document is the property of NATIONAL THERMAL POWER CORPORATION LTD.
No part of this document will be reproduced by any means without the written permission.

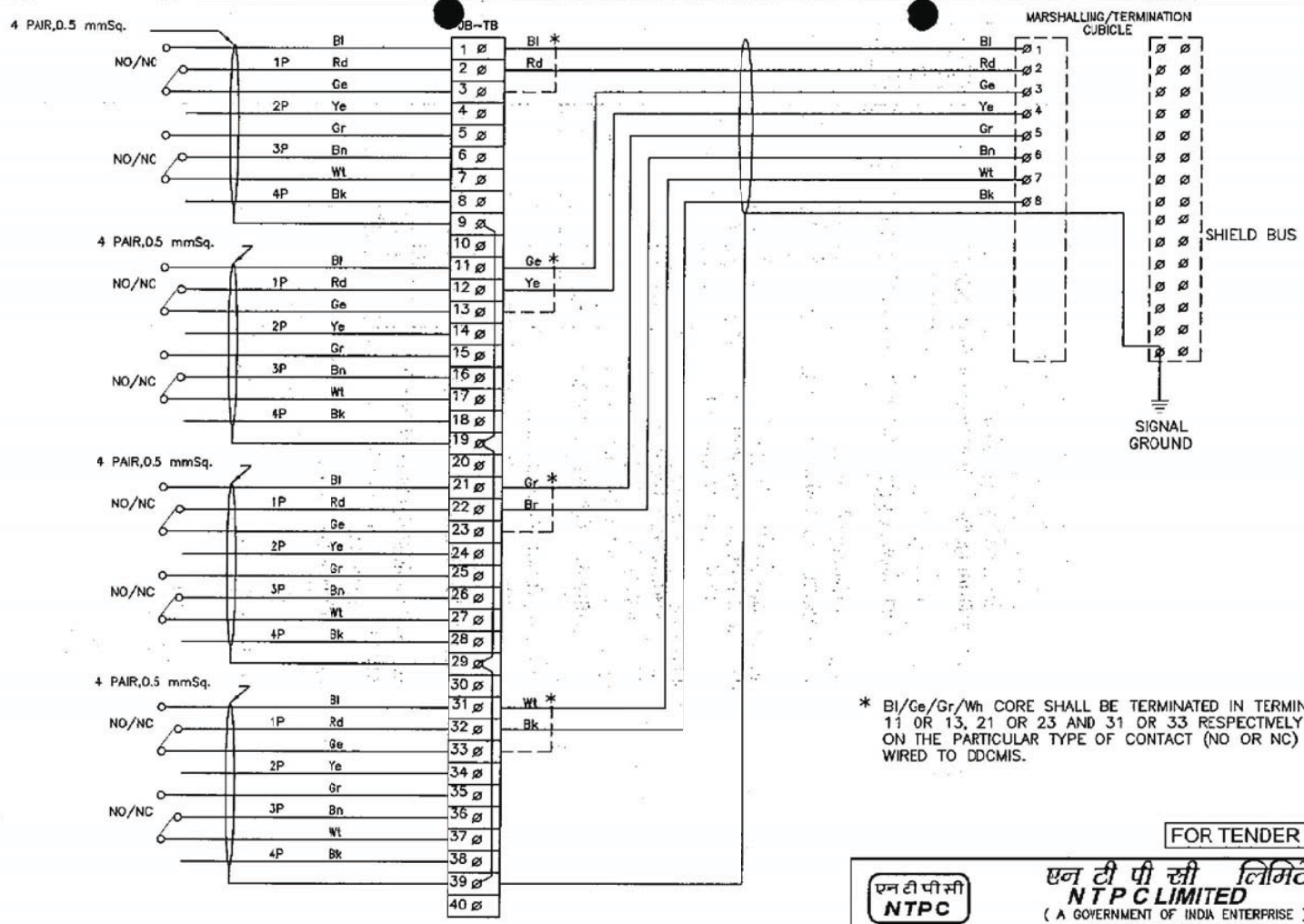

* Bl/Ge/Gr/Wh CORE SHALL BE TERMINATED IN TERMINAL 1 OR 3, 11 OR 13, 21 OR 23 AND 31 OR 33 RESPECTIVELY DEPENDING ON THE PARTICULAR TYPE OF CONTACT (NO OR NC) IS TO BE WIRED TO DDCMIS.

FOR TENDER PURPOSE ONLY

एन टी पी सी लिमिटेड
NTPC LIMITED
(A GOVERNMENT OF INDIA ENTERPRISE)
ENGINEERING DIVISION

PROJECT: TYPICAL THERMAL POWER PROJECT

TITLE: INTERFACING OF FIELD INSTRUMENTS SWITCH TERMINATION DETAILS NO/NC

REV.NO.	DESCRIPTION	DRAWN	DESIGN	CHKD.	M	E	C	C&I	ARCH.	APPD	DATE
A	FIRST ISSUE										29.04.08

CLEARED BY.

SIZE	SCALE	DRG. NO.	REV. NO.
A3	NTS	0000-999-POI-A-065 SH 02 OF 14	A

This document is the property of NATIONAL THERMAL POWER CORPORATION LTD.
No part of this document will be reproduced by any means without the written permission.

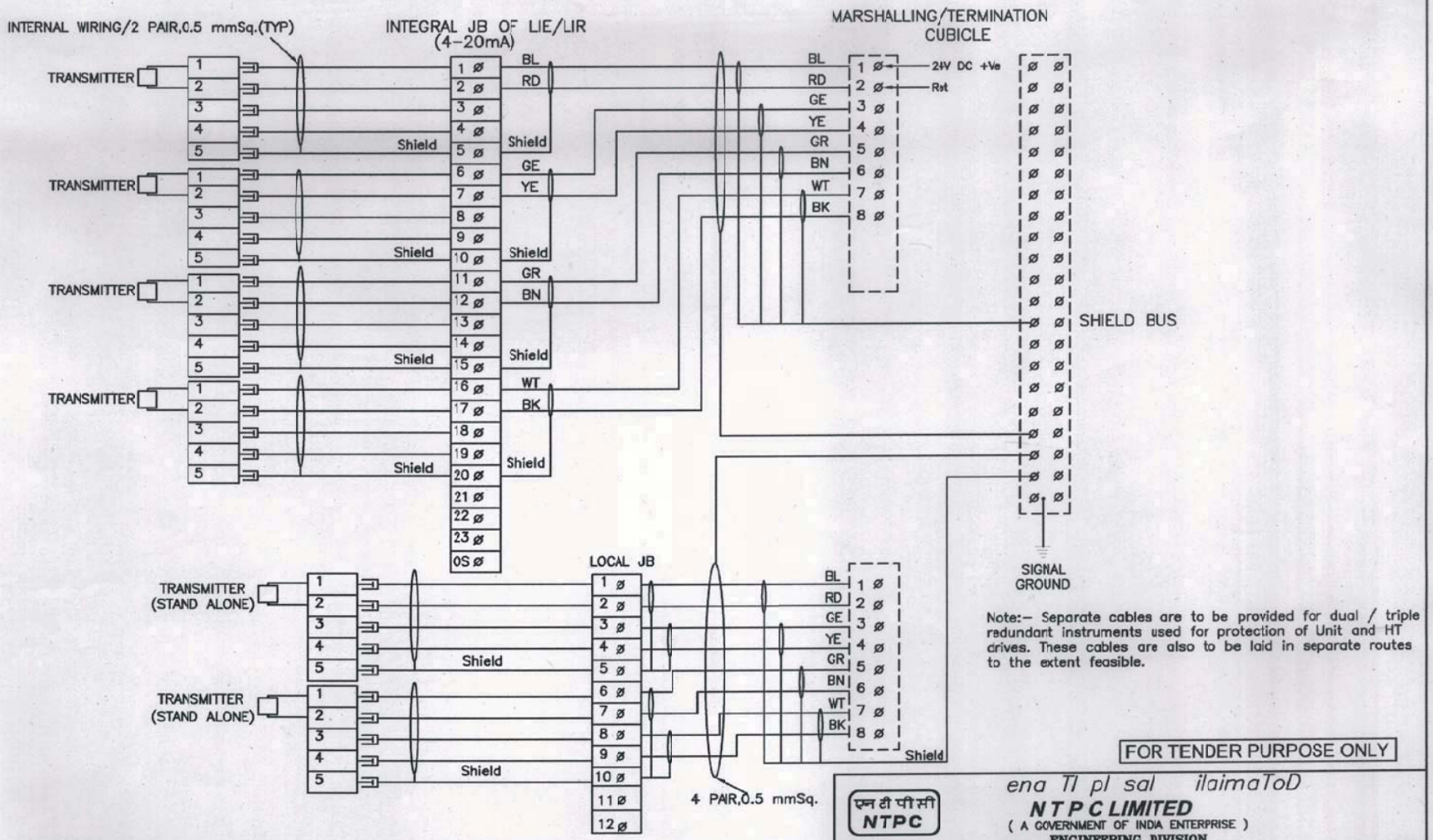

Note:– Separate cables are to be provided for dual / triple redundant instruments used for protection of Unit and HT drives. These cables are also to be laid in separate routes to the extent feasible.

FOR TENDER PURPOSE ONLY

एन टी पी सी NTPC

ena Tl pl sal ilaimaToD

NTPC LIMITED

(A GOVERNMENT OF INDIA ENTERPRISE)

ENGINEERING DIVISION

PROJECT: TYPICAL THERMAL POWER PROJECT

TITLE: INTERFACING OF FIELD INSTRUMENTS 4-20mA

REV.NO.	DESCRIPTION	DRAWN	DESIGN	CHKD.	M	E	C	C&I	ARCH.	APPD	DATE
C	NOTE REGARDING CABLE IS ADDED.										10.12.13
B	INTERNAL WIRING FOR LIE/LIR MOUNTED SHOWN WIRING OF STAND ALONE TXTR SHOWN										10.12.06
A	FIRST ISSUE										12.1.05

CLEARED BY

SIZE	SCALE	DRG. NO.	REV. NO.
A3	NTS	0000-999-POI-A-065 SH 04 OF 14	C

This document is the property of NATIONAL THERMAL POWER CORPORATION LTD. No part of this document will be reproduced by any means without the written permission.

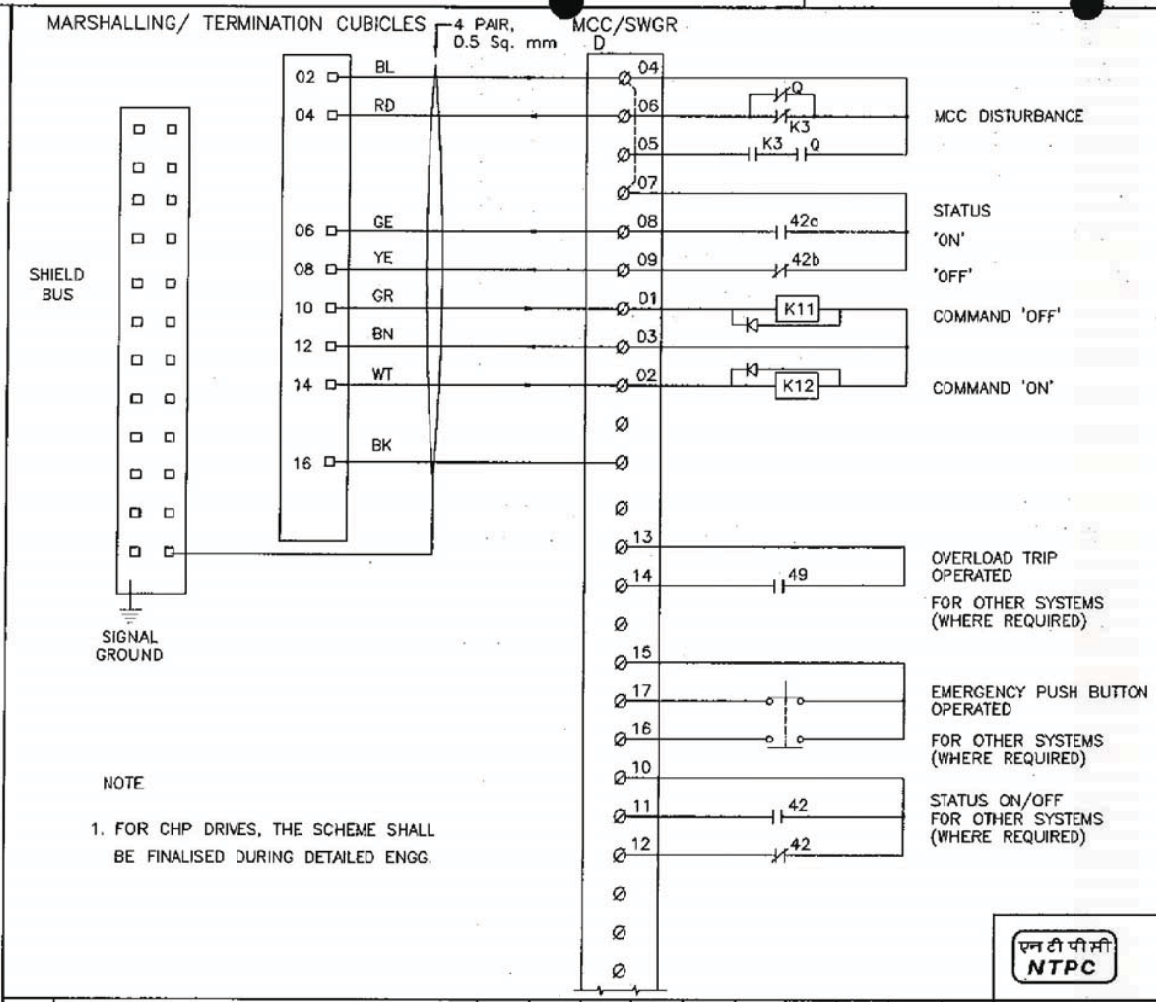

NOTE

1. FOR CHP DRIVES, THE SCHEME SHALL BE FINALISED DURING DETAILED ENGG.

This document is the property of NATIONAL THERMAL POWER CORPORATION LTD.
No part of this document will be reproduced by any means without the written permission.

FOR TENDER PURPOSE ONLY

एन टी पी सी लिमिटेड
NTPC LIMITED
(A GOVERNMENT OF INDIA ENTERPRISE)
ENGINEERING DIVISION

PROJECT: TYPICAL THERMAL POWER PROJECT

TITLE: INTERFACING OF FIELD INSTRUMENTS
INTERFACE OF DDCMIS WITH MCC/SWGR/ACTUATOR
(LT MOTORS)

REV.NO.	DESCRIPTION	DRAWN	DESIGN	CHKD.	M	E	C	C&I	ARCH.	APPD	DATE
A	FIRST ISSUE										19.04.06

CLEARED BY

SIZE	SCALE	DRG. NO.	REV. NO.
A3	NTS	0000-999-POI-A-065 SH 05 OF 14	A

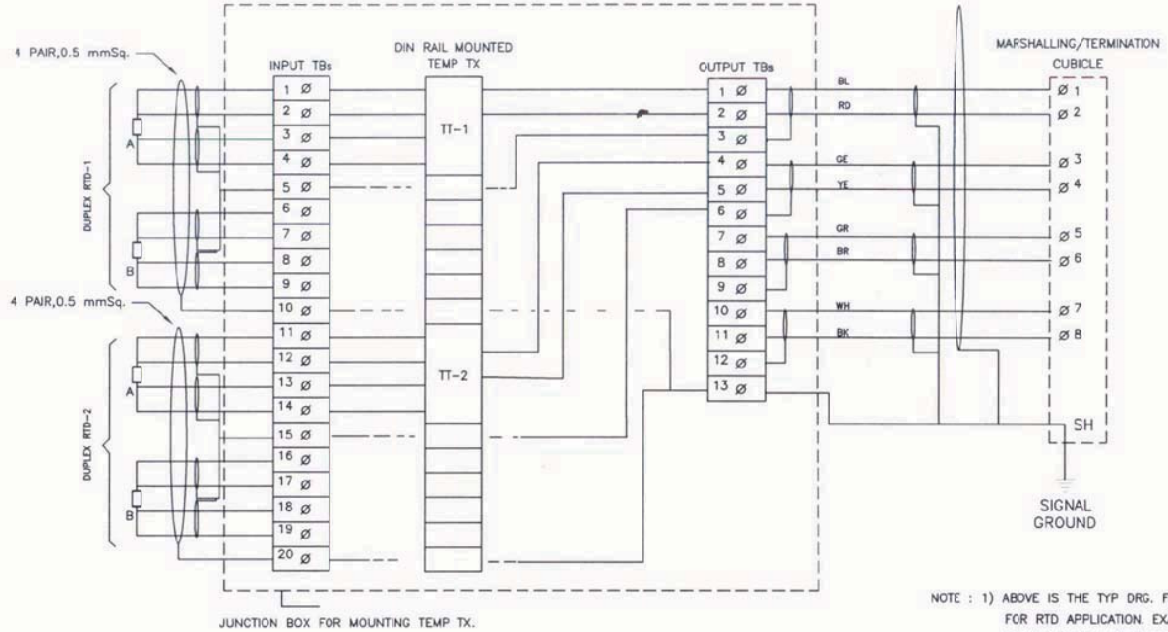

NOTE : 1) ABOVE IS THE TYP DRG. FOR DIN RAIL MOUNTED TEMP TRANSMITTERS FOR RTD APPLICATION. EXACT TYPE OF TEMP TRANSMITTER SHALL BE AS PER PART-A OF SPECIFICATION.

2) THE EXACT GROUPING OF TEMP TXs SHALL BE FINALISED DURING DETAILED ENGG. STAGE.

FOR TENDER PURPOSE ONLY

एन टी पी सी
NTPC

N T P C LIMITED
(A GOVERNMENT OF INDIA ENTERPRISE)
ENGINEERING DIVISION

PROJECT: TYPICAL THERMAL POWER PROJECT

TITLE: INTERFACING OF FIELD INSTRUMENTS
TYPICAL RTD CONNECTION WITH TEMP TRANSMITTERS INJBs

REV.NO.	DESCRIPTION	DRAWN	DESIGN	CHKD.	M	E	C	C&I	ARCH.	APPD	DATE
A	FIRST ISSUE										29.04.06

CLEARED BY

SIZE	SCALE	DRG. NO.	REV. NO.
A3	NTS	0000-999-POI-A-065 SH 06 OF 14	C

This document is the property of NATIONAL THERMAL POWER CORPORATION LTD.
No part of this document will be reproduced by any means without the written permission.

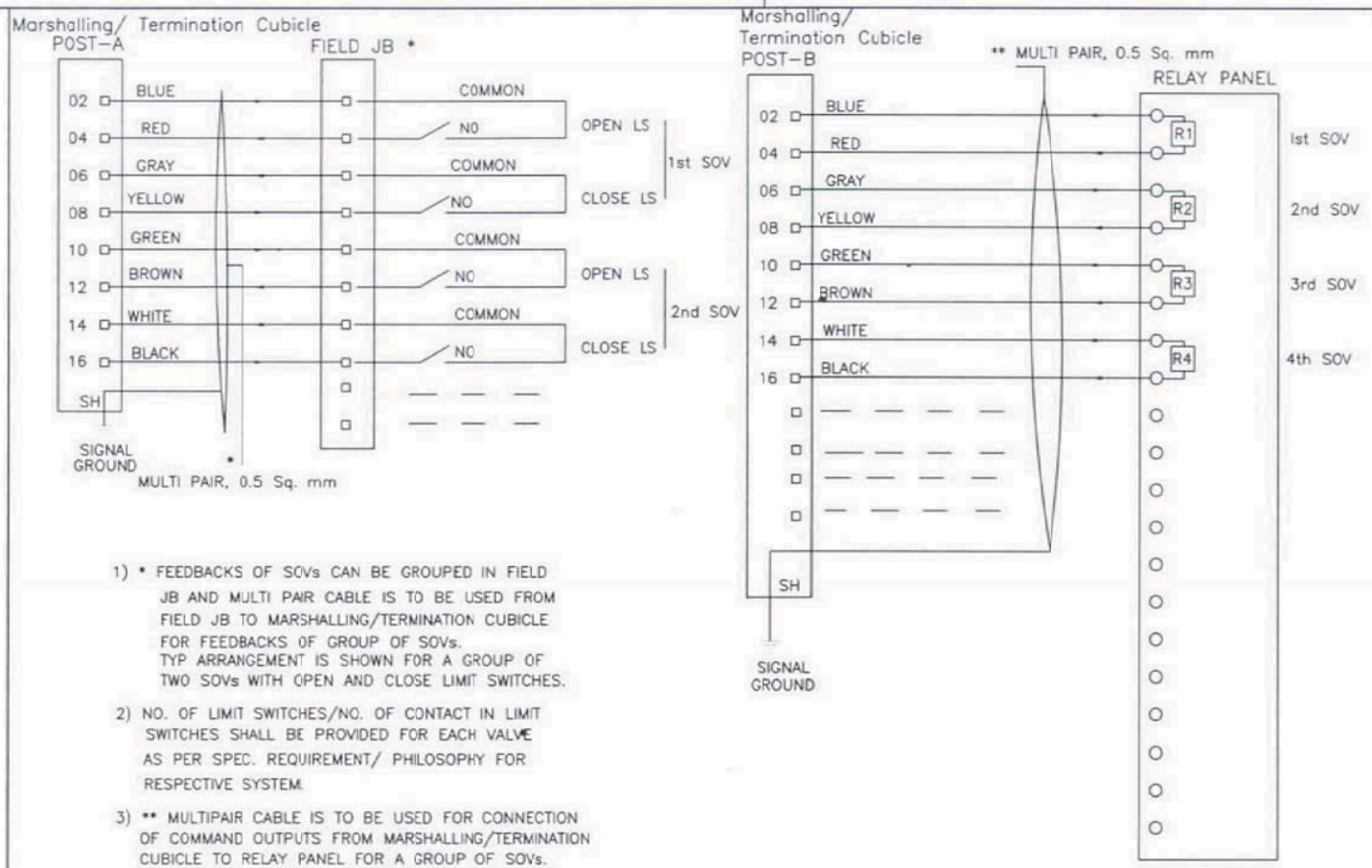

1) * FEEDBACKS OF SOVs CAN BE GROUPED IN FIELD JB AND MULTI PAIR CABLE IS TO BE USED FROM FIELD JB TO MARSHALLING/TERMINATION CUBICLE FOR FEEDBACKS OF GROUP OF SOVs. TYP ARRANGEMENT IS SHOWN FOR A GROUP OF TWO SOVs WITH OPEN AND CLOSE LIMIT SWITCHES.

2) NO. OF LIMIT SWITCHES/NO. OF CONTACT IN LIMIT SWITCHES SHALL BE PROVIDED FOR EACH VALVE AS PER SPEC. REQUIREMENT/ PHILOSOPHY FOR RESPECTIVE SYSTEM.

3) ** MULTIPAIR CABLE IS TO BE USED FOR CONNECTION OF COMMAND OUTPUTS FROM MARSHALLING/TERMINATION CUBICLE TO RELAY PANEL FOR A GROUP OF SOVs.

This document is the property of NATIONAL THERMAL POWER CORPORATION LTD. No part of this document will be reproduced by any means without the written permission.

एन टी पी सी NTPC
नेशनल थर्मल पावर कारपोरेशन लिमिटेड
National Thermal Power Corporation Ltd.
(A GOVERNMENT OF INDIA ENTERPRISE)
ENGINEERING DIVISION

PROJECT: TYPICAL THERMAL POWER PROJECT

TITLE: INTERFACING OF FIELD INSTRUMENTS
INTERFACE OF DDCMIS WITH MCC/SWGR/ACTUATOR
(SINGLE COIL SOLENOID)

REV. NO.	DESCRIPTION	DRAWN	DESIGN	CHKD.	M	E	C	C&I	ARCH.	APPD	DATE
B	FIRST ISSUE										30.10.02

CLEARED BY

SIZE	SCALE	DRG. NO.	REV. NO.
A3	NTS	0000-999-POI-A-065 SH 08 OF 14	C

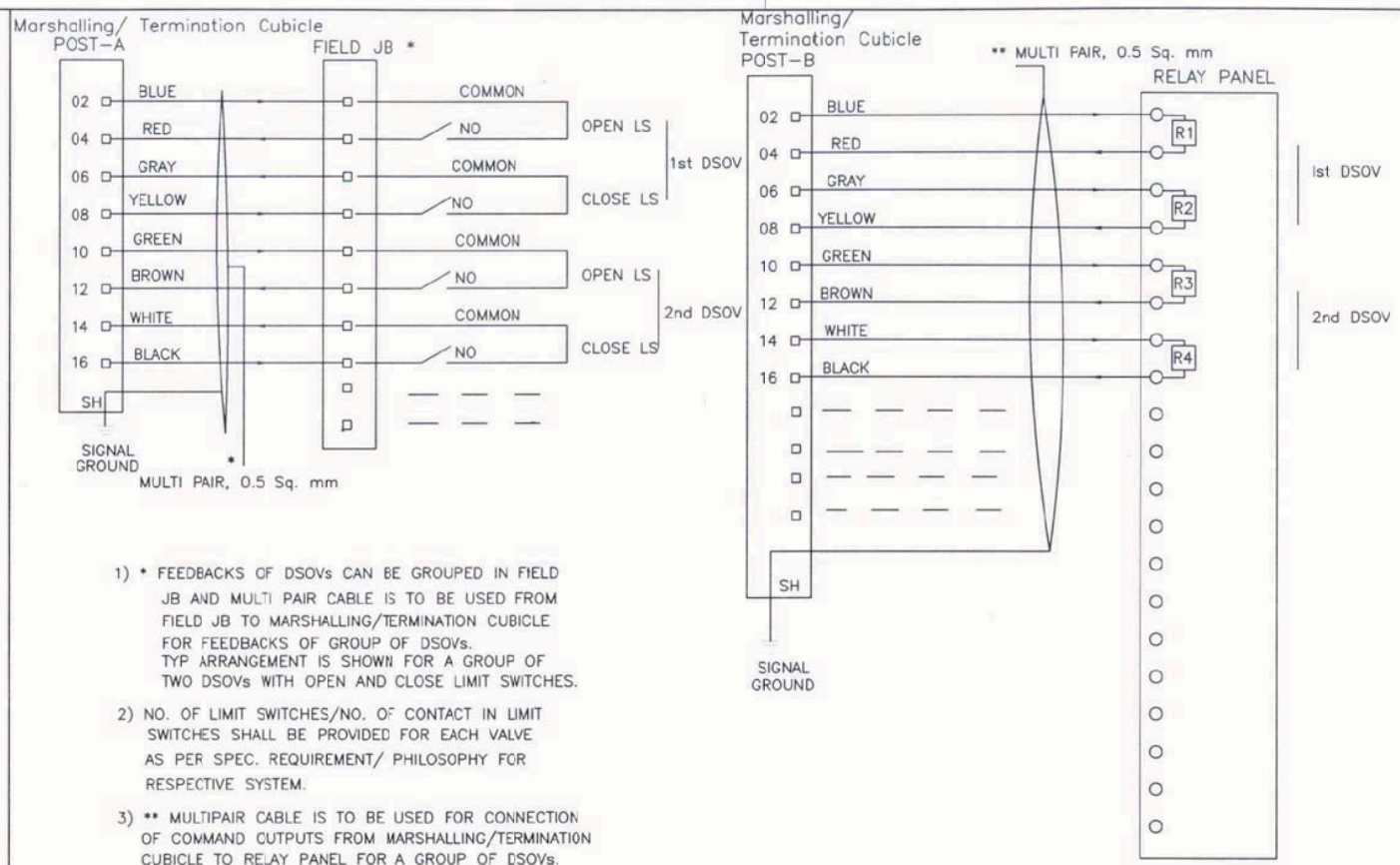

1) * FEEDBACKS OF DSOVs CAN BE GROUPED IN FIELD JB AND MULTI PAIR CABLE IS TO BE USED FROM FIELD JB TO MARSHALLING/TERMINATION CUBICLE FOR FEEDBACKS OF GROUP OF DSOVs. TYP ARRANGEMENT IS SHOWN FOR A GROUP OF TWO DSOVs WITH OPEN AND CLOSE LIMIT SWITCHES.

2) NO. OF LIMIT SWITCHES/NO. OF CONTACT IN LIMIT SWITCHES SHALL BE PROVIDED FOR EACH VALVE AS PER SPEC. REQUIREMENT/ PHILOSOPHY FOR RESPECTIVE SYSTEM.

3) ** MULTIPAIR CABLE IS TO BE USED FOR CONNECTION OF COMMAND OUTPUTS FROM MARSHALLING/TERMINATION CUBICLE TO RELAY PANEL FOR A GROUP OF DSOVs.

This document is the property of NATIONAL THERMAL POWER CORPORATION LTD. No part of this document will be reproduced by any means without the written permission.

एन टी पी सी NTPC
नैशनल थर्मल पावर कारपोरेशन लिमिटेड
National Thermal Power Corporation Ltd.
(A GOVERNMENT OF INDIA ENTERPRISE)
ENGINEERING DIVISION

PROJECT: TYPICAL THERMAL POWER PROJECT

TITLE: INTERFACING OF FIELD INSTRUMENTS
INTERFACE OF DDCMIS WITH MCC/SWGR/ACTUATOR
(DOUBLE COIL SOLENOID)

REV.NO.	DESCRIPTION	DRAWN	DESIGN	CHKD.	M	E	C	C&I	ARCH.	APPD	DATE
B	FIRST ISSUE										30.10.02

CLEARED BY

SIZE	SCALE	DRG. NO.	REV. NO.
A3	NTS	0000-999-POI-A-065 SH 09 OF 14	C

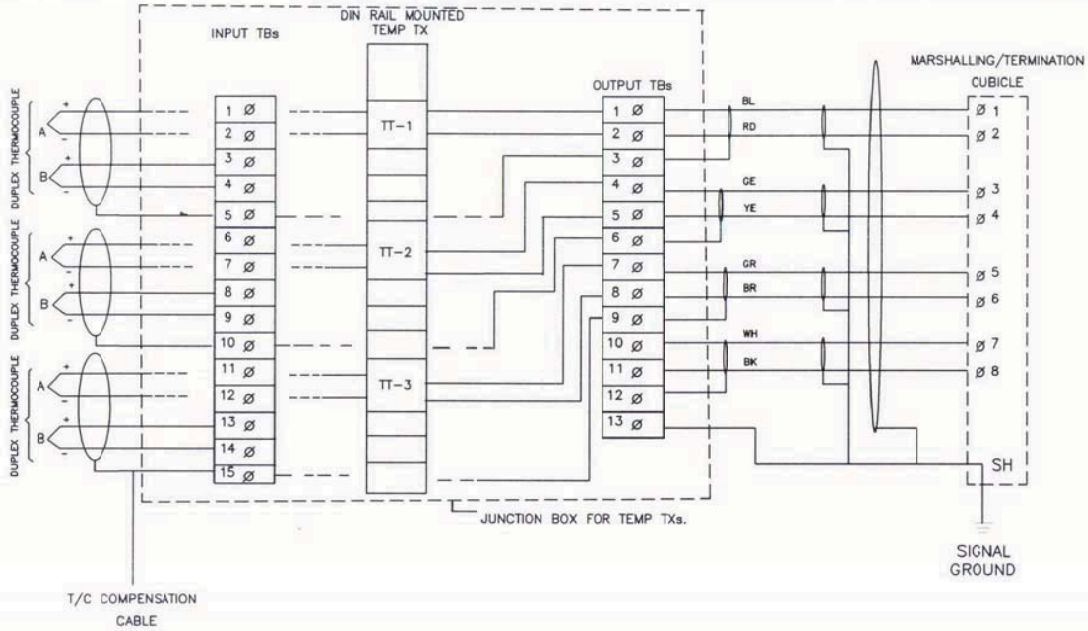

NOTE: 1) ABOVE IS THE TYP DRG. FOR DIN RAIL MOUNTED TEMP TRANSMITTER FOR T/C APPLICATION. EXACT TYPE OF TEMP TRANSMITTERS SHALL BE AS PER PART-A OF SPECIFICATION.

2) THE EXACT GROUPING OF TEMP TXs SHALL BE FINALISED DURING DETAILED ENGG. STAGE.

3) AFTER GLANDING OF T/C CABLES ON JB, THE CABLE PAIR OF FIRST ELEMENT WILL BE DIRECTLY CONNECTED TO TT AND FOR CABLE PAIR OF SECOND ELEMENT LOOP SHALL BE KEPT, BEFORE TERMINATION AT INPUT TBs FOR FUTURE USE.

FOR TENDER PURPOSE ONLY

एन टी पी सी
NTPC

N T P C LIMITED
(A GOVERNMENT OF INDIA ENTERPRISE)
ENGINEERING DIVISION

PROJECT: TYPICAL THERMAL POWER PROJECT

TITLE: INTERFACING OF FIELD INSTRUMENTS
TYPICAL T/C CONNECTION WITH TEMP TXs IN JBs

REV.NO.	DESCRIPTION	DRAWN	DESIGN	CHKD.	M	E	C	C&I	ARCH.	APPD	DATE
A	FIRST ISSUE										29.04.06

CLEARED BY

SIZE	SCALE	DRG. NO.	REV. NO.
A3	NTS	0000-999-POI-A-065 SH 11 OF 14	C

This document is the property of NATIONAL THERMAL POWER CORPORATION LTD.
No part of this document will be reproduced by any means without the written permission.

This document is the property of NATIONAL THERMAL POWER CORPORATION LTD.
No part of this document will be reproduced by any means without the written permission.

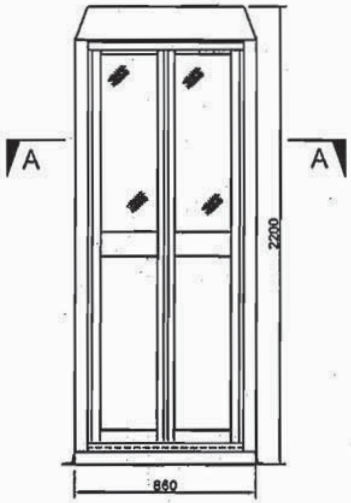

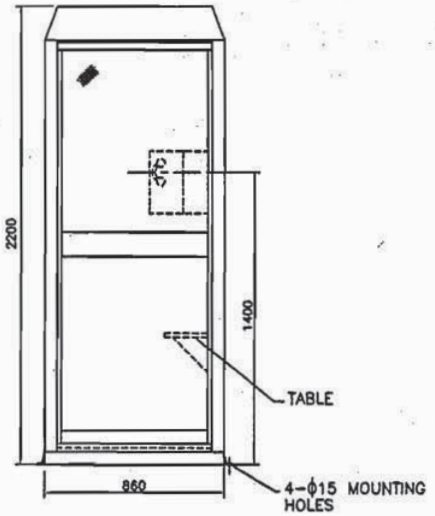

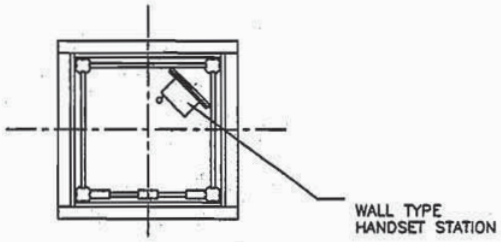

SECTION A-A

NOTES

1. LOCATIONS SHALL BE FINALISED DURING DETAILED ENGINEERING.

FOR TENDER PURPOSE ONLY

एन टी पी सी NTPC

एन टी पी सी लिमिटेड
NTPC LIMITED
(A GOVERNMENT OF INDIA ENTERPRISE)
ENGINEERING DIVISION

PROJECT: TYPICAL THERMAL POWER PROJECT

TITLE: ACOUSTIC HOOD OUT LINE

REV.NO.	DESCRIPTION	DRAWN	DESIGN	CHKD.	M	E	C	C&I	ARCH.	APPD	DATE
A	FIRST ISSUE										29.04.06

CLEARED BY

SIZE	SCALE	DRG. NO.	REV. NO.
A3	N.T.S.	0000-999-POI-A-070	A

INSTRUMENT CABLE INTERCONNECTION AND TERMINATION PHILOSOPHY

3.07.00

4.00.00

5.00.00 **INSTRUMENTATION CABLE INTERCONNECTION AND TERMINATION PHILOSOPHY**

The cable interconnection philosophy to be adopted shall be such that extensive grouping of signals by large scale use of field mounted Group Junction Boxes (JBs) at strategic locations (where large concentration of signals are available, e.g. valves limit & torque switches, switchgear) is done and consequently cable with higher number of pairs are extensively used. The details of termination to be followed are mentioned in the given Table A.

TABLE A: CABLE TERMINATION TO BE FOLLOWED

Application		**Type Of Termination**		**Type Of Cable**
FROM (A)	**TO (B)**	**END A**	**END B**	
Valves/dampers drives (Integral Junction box)	Marshalling / Marshalling – cum Termination Cubicle / local group JB	Plug in connector	Post mount cage clamp type.	G
Transmitters, Process Actuated switches mounted in LIE/LIR	Integral Junction box of LIE/LIR	Plug in connector	Cage clamp (Rail mount) type.	F,G
RTD heads	Local junction box	Plug in connector	Cage clamp (Rail mount) type.	F
Thermocouple	Local junction box / CJC box (if applicable)	Plug in connector	Cage clamp (Rail mount) type.	A, B, C*
Other Field mounted Instrument	Local JB / Group JB	Plug in connector	Cage clamp (Rail mount) type.	F,G
RTD	Temperature transmitter	Plug in connector	Screwed, Cage clamp type	F
Thermocouple	Temperature transmitter	Plug in connector	Screwed, Cage clamp type	A, B, C*
Local Junction box, Temperature Transmitter, Int. Junction box of LIE/ LIR/ MCC/SWGR	Group JB	Cage clamp (Rail mount) type.	Cage clamp (Rail mount) type.	F,G

Application		Type Of Termination		Type Of Cable
FROM (A)	TO (B)	END A	END B	
Local Junction box, Temperature Transmitter, Int. Junction box of LIE/ LIR/ Group JB / MCC/SWGR	Marshalling / Marshalling – cum Termination Cubicle	Cage clamp (Rail mount) type.	Cage clamp (Post mounted) type.	F,G
Marshalling cubicle/ Termination Cabinet	Electronic system cabinet	Cage clamp (Post mounted) type.	Plug-in connector / other system as per Mfr.'s Standard	Internal wiring
Marshalling/ Termination System Cabinets	UCD mounted equipments	Cage clamp (Post mounted) type.	Plug in connector / Cage clamp type (rail mounted).	F,G (with plug-in connect or at one end)
DDCMIS/PLC cabinets	PC, Printers etc.	Plug in connector	Plug in connector	Mfr.'s Standar d

Notes

1 Normally 10% spare cores shall be provided when the numbers of pairs of cables are more than four pairs, except for pre-fabricated cables which shall be as per manufacturer's standard.

2 For analog signals, individual pair shielding & overall shielding & for Binary signals, only overall shielding of instrumentation cables shall be provided.

3 * For high temperature applications only.

4 . For connection between field/JB and DDCMIS marshalling cabinet minimum 4 pair instrumentation cable shall be used.

5 All the spare cores of instrumentation cable have to be terminated in Marshalling cabinets/ DCS panel end.

6 For Cable type and cable termination scheme for the instruments/ equipment that are connected to Steam Turbine and Generator (STG) control system defined at Part A, sub section IIC, clause no. 2.03.01 (a) (ii) above and hydrogen generation plant auxiliaries system, Contractor's standard and proven practice is also acceptable. However, for termination of instrumentation cable at marshalling cabinets/DCS panel end, cage-clamp termination shall be offered. For power and control cable termination, Contractor's standard and proven practice would be acceptable

6.00.00 TERMINAL BLOCKS

6.01.00 All terminal blocks shall be rail mounted/post mounted, cage clamp type with high quality non-flammable insulating material of melamine suitable for working temperature of 105 deg. C. The terminal blocks in field mounted junction boxes, temperature transmitters, instrument enclosures/racks, etc., shall be suitable for cage clamp connections. The terminal blocks in Control Equipment Room logic/termination/marshalling cubicles shall be suitable for post mounted cage clamp connection at the field input end. The exact type of terminal blocks to be provided by the Bidder and the technical details of the same including width etc. shall be subject to Employer's approval.

6.02.00 All the terminal blocks shall be provided complete with all required accessories including assembly rail, locking pin and section, end brackets, partitions, small partitions, transparent covers, support brackets, distance sleeves, warning label, marking, etc.

6.03.00 The marking on terminal strips shall correspond to the terminal numbering on wiring diagrams. At least 20% spare unused terminals shall be provided everywhere including local junction boxes, instrument racks/enclosures, termination/marshalling cabinets, etc. All terminal blocks shall be numbered for identification and grouped according to the function. Engraved labels shall be provided on the terminal blocks.

6.04.00 For terminating each process actuated switches, drive actuators, control valves, Thermocouple, RTD, etc. in Local Junction Boxes, etc, refer Drg no. 0000-999-POI-A-065.

6.05.00 The terminal blocks shall be arranged with at least 100 mm clearance between two sets of terminal blocks and between terminal blocks and junction box walls.

7.00.00 INTERNAL PANELS/ SYSTEM CABINETS WIRING

7.01.00 Internal panel/cabinet wiring shall be of multi-stranded copper conductor with FRLS PVC insulation without shield and outer sheath meeting the requirements of VDE 0815.

7.02.00 All internal wires shall be provided with tag and identification nos. etched on tightly fitted ferules at both ends. All wires directly connected to trip devices shall be distinguished by one additional red colour ferrule.

7.03.00 All external connection shall be made with one wire per termination point. Wires shall not be tapped or spliced between terminal points.

7.04.00 All floor slots of desk/panels/cabinets used for cable entrance shall be provided with removable gasketed gland plates and sealing material. Split type grommets shall be used for prefabricated cables.

7.05.00 All the special tools as may be required for solder less connections shall be provided by Bidder.

7.06.00 Wire sizes to be utilised for internal wiring.

(i)	Current (4-20 mA), low voltage signals (48V); Ammeter/Voltmeter circuit, control switches etc. for electrical system.	0.5 Sq.mm.
(ii)	Power supply and internal illumination.	2.5Sq.mm. minimum (shall be as per load requirement.)

8.00.00 **INSTRUMENTATION CABLE INSTALLATION AND ROUTING**

8.01.00 All cables assigned to a particular duct/conduit shall be grouped and pulled in simultaneously using cable grips and suitable lubricants. Cables removed from one duct/conduit shall not be reused without approval of Employer.

8.02.00 Cables shall be segregated as per IEEE Std.-422. In vertically stacked trays, the higher voltage cable shall be in higher position and instrumentation cable shall be in bottom tier of the tray stack. The distance between instrumentation cables and those of other system shall be as follows:

From 11 kV/6.6 kV/3.3 kV tray system	-	914 mm
From 415V tray system	-	610 mm
From control cable tray system	-	305 mm

8.03.00 Cables shall terminate in the enclosure through cable glands. All cable glands shall be properly gasketed. Sealing (to prevent ingress of dust entry and propagation of fire) shall be provided for all floor slots used for cable entrance. Compression cable glands (double for armoured and single for other cables) shall be provided.

8.04.00 Not in use

8.05.00 The cables emanating from redundant equipment/devices shall be routed through different paths. The above segregation of cables & wiring for redundant equipments/devices shall be in accordance with IEEE-Std-422.

9.00.00 **CABLE LAYING AND ACCESSORIES**

9.01.00 CABLE LAYING

1 Cables shall be laid strictly in line with cable schedule.

2 Identification tags for cables.

Indelible tags to be provided at all terminations, on both sides of wall or floor crossing, on each conduit/duct/pipe entry/exit, and at every 20 m in cable trench/tray.

3 Cable tray numbering and marking.

To be provided at every 10m and at each end of cable way & branch connection.

4 No jointing is permissible for Instrumentation cables. For other cables Jointing for more than 250 Meters run of cable shall be permitted.

5 Buried cable protection

With concrete slabs; Route markers at every 20 Meters along the route & at every bend.

6 Road Crossings

Cables to pass through buried high density PE pipes encased in PCC. At least 300

mm clearance shall be provided between

- HT power & LT power cables,
- LT power & LT control/instrumentation cables,

Spacing between cables of same voltage grade shall be in accordance with the derating criteria adopted for cable sizing.

7 Segregation (physical isolation to prevent fire jumping)

a All cable associated with the unit shall be segregated from cables of other Units.

b Interplant cables of station auxiliaries and unit critical drives shall be segregated in such a way that not more than half of the drives are lost in case of single incident of fire.

8 Cable clamping

All cables laid on trays shall be neatly dressed up & suitably clamped/tied to the tray. For cables in trefoil formation, trefoil clamps shall be provided.

9 Optical fiber cables (OFCs) :

Outside Building Area - to be laid necessarily inside GI conduit with support from cable tray/Trestle structure

Inside Building Area – to be laid on separate cable sub-trays

While buried- in separate burried trench approx.1.0 meter depth, to be laid in 2" rodent proof HDPE conduits covered with sand, brick, laid breadth-wise and soil along the pipe line route by contractor;

While crossing roads - to be laid in GI/ rodent proof HDPE conduits with sand filling at bottom and sand, soil filling at top with cement concrete;

While crossing canals/river- to be laid in rodent proof HDPE conduits within hume pipe.

10 **Laying of Network Cable (UTP/STP) :**

Out side Building Area- to be laid necessarily inside GI conduits with support from cable tray / Trestle structure.

Inside Building Area- to be laid necessarily inside GI conduits on separate cable sub-trays.

9.02.00 Bidder shall supply and install all cable accessories and fittings like Light Interface Units, Surge suppressors, Opto isolators, Interface Converters, Fibre Optic Card Cage, Fibre Optic Line Driver, Repeater / Modem (for Optical Fibre Cables), cable glands, grommets, lugs, termination kits etc. on as required basis.

9.03.00 Cables, which terminate in cabinets of draw out sections shall have sufficient cable coiled in the bottom of the cabinet to permit full withdrawal of draw out sections without disconnecting the cables. When prefabricated cables with factory connectors on both ends are longer than required, the excess cable shall be coiled in the bottom of one or both termination cabinets.

9.04.00 The Bidder shall be responsible for proper grounding of all equipment under this package. Further, proper termination of cable shields shall be verified and the grounding of the same shall be coordinated so as to achieve grounding of all instrumentation cable shields at same potential. This shall be completed prior to system tests.

9.05.00 The Contractor shall take full care while laying / installing cables as recommended by cable manufacturers regarding pulling tensions and cable bends. Cables damaged in any way during installation shall be replaced at the expense of the Contractor.

10.00.00 FIELD MOUNTED LOCAL JUNCTION BOXES

(i)	No. of ways	12/24/36/48/64/72/96/128 with 20% spares terminals.
(ii)	Material and Thickness	4mm thick Fiberglass Reinforced Polyester (FRP).
(iii)	Type	Screwed at all four corners for door. Door gasket shall be of synthetic rubber.
(iv)	Mounting clamps and accessories	Suitable for mounting on walls, columns, structures etc. The brackets, bolts, nuts, screws, glands required for erection shall be of SS, included in Bidders scope of supply.
(v)	Type of terminal blocks	Rail mounted cage-clamp type suitable for conductor size upto 2.5 mm^2. A M6 earthing stud shall be provided.
(vi)	Protection Class	IP: 55 minimum for indoor & IP-65 minimum for outdoor applications.
(vii)	Grounding	To be provided.
(viii)	Color	RAL 7035

11.00.00 CONDUITS

11.01.00 Conduits shall be generally used for interconnecting cables from field instruments to Local JB's. All rigid conduits, couplings and elbows shall be hot dipped galvanised rigid mild steel in accordance with IS: 9537 Part-I (1980) and Part-II (1981). The conduit interior and exterior surfaces shall have continuous zinc coating with an overcoat of transparent enamel lacker or zinc chromate. Flexible conduit shall be heat resistant lead coated galvanized steel with , water leak, fire and rust proof protected *for the areas of* Mills,Drum, Main Steam, RH steam Air Heaters and Furnace, BFPDT's .

And for remaining applications, water leak, fire and rust proof flexible GI conduits shall be provided. The temperature rating of flexible conduit shall be suitable for actual application.

11.02.00 All rigid conduit fittings shall conform to the requirements of IS: 2667, 1976. Galvanized steel fitting shall be used with steel conduit. All flexible conduit fittings shall be liquid tight, galvanized steel. The end fittings shall be compatible with the flexible conduit supplied.

11.03.00 Conduit sealing, explosion proof, dust proof and other types of special fittings shall be provided as required by these specifications and shall be consistent with the area and equipment with which they are installed. Fittings installed outdoors and in damp locations shall be sealed and gasketed. Hazardous area fittings and conduits sealing shall conform

with NEC requirements for the area classification.

11.04.00 Contractor shall provide double locknuts on all conduit terminations not provided with threaded hubs and couplings. Water tight conduit unions and rain tight conduit hubs shall be utilised for all the application which shall be exposed to weather. Moisture pockets shall be eliminated from conduits.

11.05.00 Conduits shall be securely fastened to all boxes and cabinets.

12.00.00 CABLE SUB-TRAY & SUPPORT

12.01.00 The cable sub-trays and the supporting system, to be generally used between Local/Group JBs and the main cable trays and the same shall be furnished and installed by the Contractor. It is the assembly of sections and associated fittings forming a rigid structural system used to support the cable from the equipment or instrument enclosure upto the main cable trays (trunk route).

12.02.00 The covers on the cable sub-trays shall be used for protection of cables in areas where damage may occur from falling objects, welding spark, corrosive environment, etc. & shall be electrically continuous and solidly grounded.

QUALITY ASSURANCE-INSTRUMENTS

MEASURING INSTRUMENTS (PRIMARY AND SECONDARY)

TESTS / ITEMS	Dimensions (R)	Make, Model, Type, Rating (R)	Process / Electrical connection (R)	Calibration (R)	Test as per standard(R)	Insulation Resistance (R)	IBR Certification (if applicable)(R)	Hydro Test(R)	Material Test certificate ®
1. PR Gauge (IS-3624)	Y	Y	Y	Y	Y				
2. Temp. Gauge (BS-5235)	Y	Y	Y	Y	Y				
3. Pr./D.P.Switch(BS-6134)	Y	Y	Y	Y	Y	Y			
4. Electronic Transmitter(IEC-770)	Y	Y	Y	Y	Y	Y			
5. Temp. Switch	Y	Y	Y	Y	Y	Y			
6. Recorder(IS-9319/ANSI C-39.4)	Y	Y	Y	Y	Y	Y			
7. Vertical indicators	Y	Y	Y	Y		Y			
8. Digital Indicators	Y	Y	Y	Y		Y			
9. Integrators	Y	Y	Y	Y					
10. Electrical Metering Instrument (IS-1248)	Y	Y	Y	Y	Y	Y			
11. Transducer (IEC-688)	Y	Y	Y	Y	Y	Y			
12. Thermocouples (ANSI-MC-96.1)	Y	Y	Y	Y	Y	Y			
13. RTD(IEC-751)	Y	Y	Y	Y	Y	Y			
14. Thermowell	Y		Y				Y	Y	Y

R-Routine Test A- Acceptance Test Y – Test applicable

:

TESTS / ITEMS	Dimensions (R)	Make, Model, Type, Rating (R)	Process / Electrical connection (R)	Calibration (R)	Requirement as per standard (R)	WPS approval (A)	Non-destructive testing (R)	Calculation for accuracy (R)	Insulation Resistance (R)	IBR Certification as applicable (R)	Hydro test (R)	Material test certificate (A)
15. Cold junction compensation box	Y	Y	Y	Y					Y			
16. Orifice plate(BS-1042)	Y	Y	Y	Y *	Y	Y **	Y **			Y	Y **	Y
17. Flow nozzle(BS-1042)	Y	Y	Y	Y *	Y	Y	Y			Y	Y	Y
18. Impact head type element	Y	Y	Y					Y				Y
19. Level transmitter/float type switch	Y	Y	Y	Y					Y	Y	Y	Y
20. Flue Gas analyser	Y	Y	Y	Y								
21. Dust emission monitors	Y	Y	Y	Y								
*Calibration to be carried out on one flow element of each type and size if calibration carried out as type test same shall not be repeated.												
** If applicable												

R-Routine Test A- Acceptance Test Y – Test applicable

Note: 1) Detailed procedure of Environmental Stress screening test shall be as per Quality Assurance. Programme in General Technical Conditions

2) This is an indicative list of tests/checks. The manufacturer is to furnish a detailed quality plan indicating the Practices and Procedure adopted alongwith relevant supporting documents.

ELECTRICAL ACTUATOR WITH INTEGRAL STARTER

ITEM/ COPONENT/ SUB SYSTEM ASSEMBLY/ TESTING \ Test/Attributes Characteristics	RPM ®	No Load Current ®	IR & HV Test®	Mounting Dimension®	All routine Test as per Standard & Specification®	Correct Phase Sequence®	Operation & Setting of limit Switch/Torque Switch®	Stall Torque/Current (A)	Hand Wheel operation/ Auto de clutch function (A)	Function of Aux. like Potentiometer, space heater, position indicator ®	EPT output ®	Grease leakage ®	Local/ Remote (Open-Stop-Close) Operation® Safety check (Single phasing, Phase correction, Tripping etc.) (A)
ELECTRICAL ACTUATOR WITH INTEGRAL STARTER(IS_9334)													
Motor	Y	Y	Y	Y	Y								
Final Testing	Y	Y	Y	Y	Y	Y	Y	Y	Y	Y	Y	Y	Y

Note: 1) Detailed procedure of Environmental Stress Screening test shall be as per Quality Assurance Programme in General Technical Conditions. Requirement of test and procedure finalized during QP finalization

2) This is an indicative list of tests/checks. The manufacturer is to furnish a detailed quality plan indicating the practices and procedure adopted along with relevant supporting documents.

® - Routine Test (A) - Acceptance Test Y - Test applicable

STANDARD CHECK LIST FOR C&I INSTRUMENTS (for Maux Pkgs)

CHECK LIST FOR SOLENOID VALVES

Sl. No.	Test / Checks	Quantum of check	Reference Doc. / Acceptance Norms	Agency **			Remarks
				M	C	B	
1	CHECK FOR	SEE NOTE-1 BELOW	APPROVED SPEC./ DATA SHEETS	P	W	V	
	TYPE						
	MAKE						
	MODEL No.						
2	MATERIAL (BODY. PLUNGER/TRIM)			P	W	V	
3	PORT SIZE			P	W	V	
4	CABLE CONNECTION SIZE			P	W	V	
5	ENCLOSURE CLASS			P	W	V	TYPE TEST CERTIFICATE TO BE FURNISHED BY VENDOR
6	No. OF COILS & INSULATION CLASS			P	W	V	TEST CERTIFICATE TO BE FURNISHED FOR INSULATION CLASS BY VENDOR
7	POWER SUPPLY CHECK			P	W	V	
8	IR / HV TEST			P	W	V	
9	FUCTIONAL TEST			P	W	V	

Legend :

** M = Manufacturer / Sub-contractor, C = Contractor / Nominated Inspecting Agency, B = BHEL, P = Perform, W = Witness, V = Verification

Note :

1. Quantum of check shall be as below :
   100 % - By Manufacturer
2. Manufacturer to maintain calibrated instrument having better accuracy than the item under test. Inspecting engineer shall check the same.
3. Contractor to provide compliance certificate for tests/checks verifid by contractor and submit the same alongwith test certificates to be verified by BHEL.

SUB–SECTION – IIIC-10

TYPE TEST REQUIREMENTS

1.00.00 TYPE TEST REQUIREMENTS

1.01.00 General Requirements

1.01.01 The Contractor shall furnish the type test reports of all type tests as per relevant standards and codes as well as other specific tests indicated in this specification. If the bidder proposes a different standard/code from that indicated at table 3.00.00, same is acceptable provided the equivalence of the proposed standard is established by the bidder. A list of such tests are given for various equipment in table titled 'TYPE TEST REQUIREMENT FOR C&I SYSTEMS' at the end of this chapter and under the item Special Requirement for Solid State Equipments/Systems. For the balance equipment instrument, type tests may be conducted as per manufactures standard or if required by relevant standard.

(a) Out of the tests listed, the Bidder/ sub-vendor/ manufacturer is required to conduct certain type tests specifically for this contract (and witnessed by Employer or his authorized representative) even if the same had been conducted earlier, as clearly indicated subsequently against such tests.

(b) For the rest, submission of type test results and certificate shall be acceptable provided.

i. The same has been carried out by the Bidder/ sub-vendor on exactly the same model /rating of equipment.

ii. There has been no change in the components from the offered equipment & tested equipment.

iii. The test has been carried out as per the latest standards alongwith amendments as on the date of Bid opening.

(c) In case the approved equipment is different from the one on which the type test had been conducted earlier or any of the above grounds, then the tests have to be repeated and the cost of such tests shall be borne by the Bidder/ sub-vendor within the quoted price and no extra cost will be payable by the Employer on this account.

1.01.02 As mentioned against certain items, the test certificates for some of the items shall be reviewed and approved by the main Bidder or his authorized representative and the balance have to be approved by the Employer.

1.01.03 The schedule of conduction of type tests/ submission of reports shall be submitted and finalized during pre-award discussion.

1.01.04 For the type tests to be conducted, Contractor shall submit detailed test procedure for approval by Employer. This shall clearly specify test setup, instruments to be used, procedure, acceptance norms (wherever applicable), recording of different parameters, interval of recording precautions to be taken etc. for the tests to be carried out.

1.01.05 The Bidder shall indicate in the relevant BPS schedule, the cost of the type test for each item only for which type tests are to be conducted specifically for this project. The cost shall only be payable after conduction of the respective type test in presence of authorize representative of Employer. If a test is waived off, then the cost shall not be payable.

2.00.00 **SPECIAL REQUIREMENT FOR SOLID STATE EQUIPMENTS/ SYSTEMS**

2.01.00 The minimum type test reports, over and above the requirements of above clause, which are to be submitted for each of the major C&I systems shall be as indicated below:

i) Surge Withstand Capability (SWC) for Solid State Equipments/ Systems

All solid state systems/ equipments shall be able to withstand the electrical noise and surges as encountered in actual service conditions and inherent in a power plant. All the solid state systems/ equipments shall be provided with all required protections that needs the surge withstand capability as defined in ANSI 37.90.1/ IEEE-472. Hence, all front end cards which receive external signals like Analog input & output modules, Binary input & output modules etc. including power supply, data highway, data links shall be provided with protections that meets the surge withstand capability as defined in ANSI 37.90.1/ IEEE-472. Complete details of the features incorporated in electronics systems to meet this requirement, the relevant tests carried out, the test certificates etc. shall be submitted along with the proposal. As an alternative to above, suitable class of EN 61000-4-12 which is equivalent to ANSI 37.90.1/ IEEE-472 may also be adopted for SWC test.

ii) Dry Heat test as per IEC-68-2-2 or equivalent.

iii) Damp Heat test as per IEC-68-2-3 or equivalent.

iv) Vibration test as per IEC-68-2-6 or equivalent.

v) Electrostatic discharge tests as per EN 61000-4-2 or equivalent.

vi) Radio frequency immunity test as per EN 61000-4-6 or equivalent.

vii) Electromagnetic Field immunity as per EN 61000-4-3 or equivalent.

Test listed at item no. v, vi, vii, above are applicable for electronic cards only as defined under item (i) above.

3.00.00 **TYPE TEST REQUIREMENT FOR C&I SYSTEMS**

Sl. No	Item	Test Requirement	Standard	Test To Be Specifically Conducted	NTPC's Approval Req. On Test Certificate
Col 1	Col 2	Col 3	Col 4	Col 5	Col 6
1	Elect. Metering instruments	As per standard (col 4)	IS-1248	No	Yes
2	Transducers	As per standard (col 4)	IEC-60688,IS12784	No	Yes
3	Thermocouple	Degree of protection test	IS-13947	No	No
4	RTD	As per standard (col 4)	IEC-60751	No	No
5	Electronic transmitter	As per standard (col 4)	BS-6447 / IEC-60770	No	Yes
6	E/P converter	As per standard (col 4)	Mfr. standard	No	No
7	Dust emission monitor	Degree of protection test	IS-13947	No	Yes
8	Instrumentation Cables Twisted & Shielded*				
	-Conductor	Resistance test	VDE-0815	No	Yes
		Diameter test	IS-10810	No	Yes
		Tin Coating test (Persul-phate test)	IS-8130	No	Yes
	-Insulation	Loss of mass	VDE 0472	No	Yes
		Ageing in air ovens**	VDE 0472	No	Yes

	Tensile strength and elongation test before and after ageing**	VDE 0472	No	Yes
	Heat shock	VDE 0472	No	Yes
	Hot deformation	VDE 0472	No	Yes
	Shrinkage	VDE 0472	No	Yes
	Bleeding & blooming	IS-10810	No	Yes
-Inner sheath***	Loss of mass	VDE 0472	No	Yes
	Heat shock	VDE 0472	No	Yes
	Cold bend/ cold impact test	VDE 0472	No	Yes
	Hot deformation	VDE 0472	No	Yes
	Shrinkage	VDE 0472	No	Yes
-Outer sheath	Loss of mass	VDE 0472	No	Yes
	Ageing in air ovens**	VDE 0472	No	Yes
	Tensile strength and elongation test before and after ageing**	VDE 0472	No	Yes
	Heat shock	VDE 0472	No	Yes
	Hot deformation	VDE 0472	No	Yes
	Shrinkage	VDE 0472	No	Yes
	Bleeding & blooming	IS-10810	No	Yes
	Colour fastness to water	IS-5831	No	Yes

	Cold bend/ cold impact test	VDE-0472	No	Yes
	Oxygen index test	ASTMD-2863	No	Yes
	Smoke Density Test	ASTMD-2843	No	Yes
	Acid gas generation test	IEC-60754-1	No	Yes
-fillers	Oxygen index test	ASTMD-2863	No	Yes
	Acid gas generation test	IEC-60754-1	No	Yes
-AL-MYLAR shield	Continuity test		No	Yes
	Shield thickness		No	Yes
	Overlap test		No	Yes
-Over all cable	Flammability Test	IEEE 383	No	Yes
	Swedish Chimney Test	SEN 4241475	No	Yes
	Noise interference	IEEE Trans-actions	No	Yes
	Dimensional checks	IS 10810	No	Yes
	Cross talk	VDE-0472	No	Yes
	Mutual capacitance	VDE-0472	No	Yes
	HV test	VDE-0815	No	Yes
	Drain wire continuity		No	Yes

* 1.0 All cables to be supplied shall be of type tested quality. The Contractor shall submit for Owner's approval the reports of all the type tests as listed in this specification and carried out within last Ten years from the date of bid opening. These reports should be for the tests conducted on the equipment similar to those proposed to be supplied under this contract and the test(s) should have been either conducted at an independent laboratory or should have been witnessed by a client.

2.0 In case the Contractor is not able to submit report of the type test(s) conducted within last Ten years from the date of bid opening, or in case the type test report(s) are not found to be meeting the specification requirements, the Contractor shall conduct all such tests either in an independent laboratory or at manufacturer's works in presence of Owner's representative under this contract free of cost to the Owner and submit the reports for approval.

**These tests shall be carried out as per VDE0207 Part 6 & ASTMD-2116 for TEFLON insulated & outer sheathed cables

***Applicable for armoured cables only

9 DC Power Supply System (Applicable for each model and rating)

1)The Type Test reports for offered rectifier module and the controller module irrespective of the rectifier bank shall be acceptable

Surge Withstand Capability(SWC)	ANSI 37.90.1, IEEE-472,EN 61000-4-12	No	Yes
Dry Heat Test	IEC-68-2-2 or equivalent	No	Yes
Damp Heat test	IEC-68-2-3 or equivalent	No	Yes
Vibration test	IEC68-2-6 or equivalent	No	Yes
Electrostatic discharge test	EN 61000-4-2 orr equivalent	No	Yes
Radio frequency immunity test	EN-61000-4-3 orr equivalent	No	Yes
Electromagnetic field immunity	EN 61000-4-3 orr equivalent	No	Yes
Degree of Protection	IS-13947 or equivalent	No	Yes

10	Battery ##	As per standard (col 4)	IS-10918 (Ni-Cd Batteries)	No	Yes
			IS-1652 (Lead Acid Plante Batteries)	No	Yes
11	NOT APPLICABLE				

12 UPS (Applicable for each model and rating)

1) Type Test reports of same series of UPS with similar PCB's cards and controllers as the target UPS system shall be acceptable.

2) For Dry heat, Damp heat and vibration, the tests conducted on individual PCB's shall be acceptable.

Surge Withstand Capability(SWC)	ANSI 37.90.1, IEEE-472,EN 61000-4-12	No	Yes
Dry Heat Test	IEC-68-2-2 or equivalent	No	Yes
Damp Heat test	IEC-68-2-3 or equivalent	No	Yes
Vibration test	IEC68-2-6 or equivalent	No	Yes
Electrostatic discharge test	EN 61000-4-2 orr equivalent	No	Yes
Radio frequency immunity test	EN-61000-4-3 orr equivalent	No	Yes
Electromagnetic field immunity	EN 61000-4-3 orr equivalent	No	Yes
Degree of protection test	IS-13947	No	Yes
Fuse Clearing Capability	Approved procedure	No	Yes
Short Circuit current capability	IEC 60146-2	No	Yes

13	Voltage Stabilisers	Over Load Test	Approved procedure	No	Yes
		Temp rise test without redundant fans	Approved procedure	No	Yes
14	Public Address System				
	- Amplifiers	As per standard (col 4)	IS 9302, Part-II	No	Yes
	Microphones	As per standard (col 4)	IS 9302, Part-III IS 15482:2004/ IEC 61842(2002)	No	Yes
	Loudspeaker	As per standard (col 4)	IS 9302, Part-IV	No	Yes
15	LIE / LIR	Degree of protection test	IS-13947	No	Yes
16	Flue gas analyzers	Degree of protection test	IS-13947	No	Yes
17	Master Clock	Functional test	As per approved procedure	No	Yes
18	CJC Box	Degree Of protection test	IS-13947	No	Yes
19	Junction Box	Degree Of protection Test	IS-13947	No	Yes
20	OPC Data Access Server, Data Exchange Server &	OPC Compliance Testing		No	Yes (Self certification is also

	Historical Data Access Server				acceptable)
21	Conductivity Type Level Switch	Degree of protection test	IS-2147	No	No
22	Local Gauges	Degree of protection test	IS-2147	No	No
23	Process actuated Switches	Degree of protection test	IS-2147	No	No
24	Control Valves	CV test	ISA 75.02& 75.11	No	Yes
25	PLCs	As per standard (Col 4)	IEC 1131	No	No
26	Flow Nozzle Orifice plates	Calibration	ASME PTC BS 1042	No	Yes

The contractor shall submit for Employers approval the reports of all the type test as per latest IS-10918 carried out within last ten years from the date of Bid opening and the test(s) should have been either conducted at an independent laboratory or in presence / owners representative. The complete type test reports shall be for any rating of Battery in a particular group based on plate dimensions being manufactured by supplier.

Note:

Type Tests are to be conducted only for the items, which are being supplied as a part of this Package.

INSTRUMENT STUB DETAILS

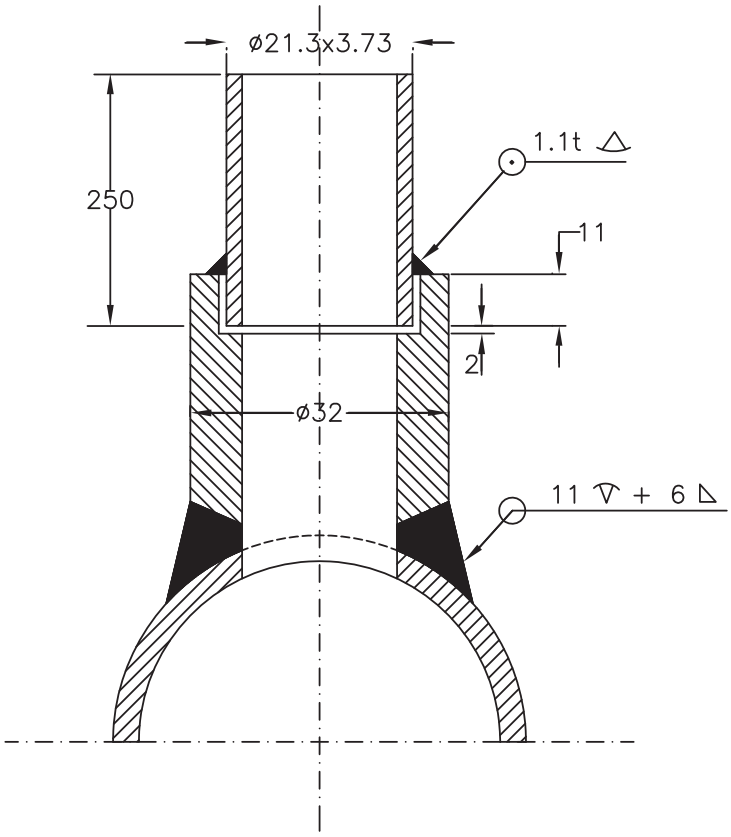

NOTE :

1. MATERIAL OF THE BOSS AND NIPPLE SHALL BE THE SAME AS THE PIPE INTO WHICH IT IS WELDED AND CONFORM TO ANSI B16.11.
2. THE LENGTH OF NIPPLE SHALL BE 250 MM.
3. ALL DIMENSIONS ARE IN MM UNLESS OTHERWISE INDICATED
4. EDGE HOLE MUST BE CLEAN AND SQUARE OR ROUNDED SLIGHTLY (1/64" RADIUS) FREE FROM BURRS, WIRE EDGES OR OTHER IRREGULARITIES
5. STUB LENGTH SHALL BE 64mm UPTO 250Nb PIPE, 45mm ABOVE 200Nb PIPE SIZE.

TITLE :

INSTRUMENT STUB DETAILS FOR PRESSURE MEASUREMENT

(SYSTEM PRESS UPTO 40Kg/Cm2, TEMP< 400 Deg C)

DRG. NO.

PE-DG-434-145-I101

REV. 00

SH. 04 OF 08 SHS.

TEMP. MEASUREMENT

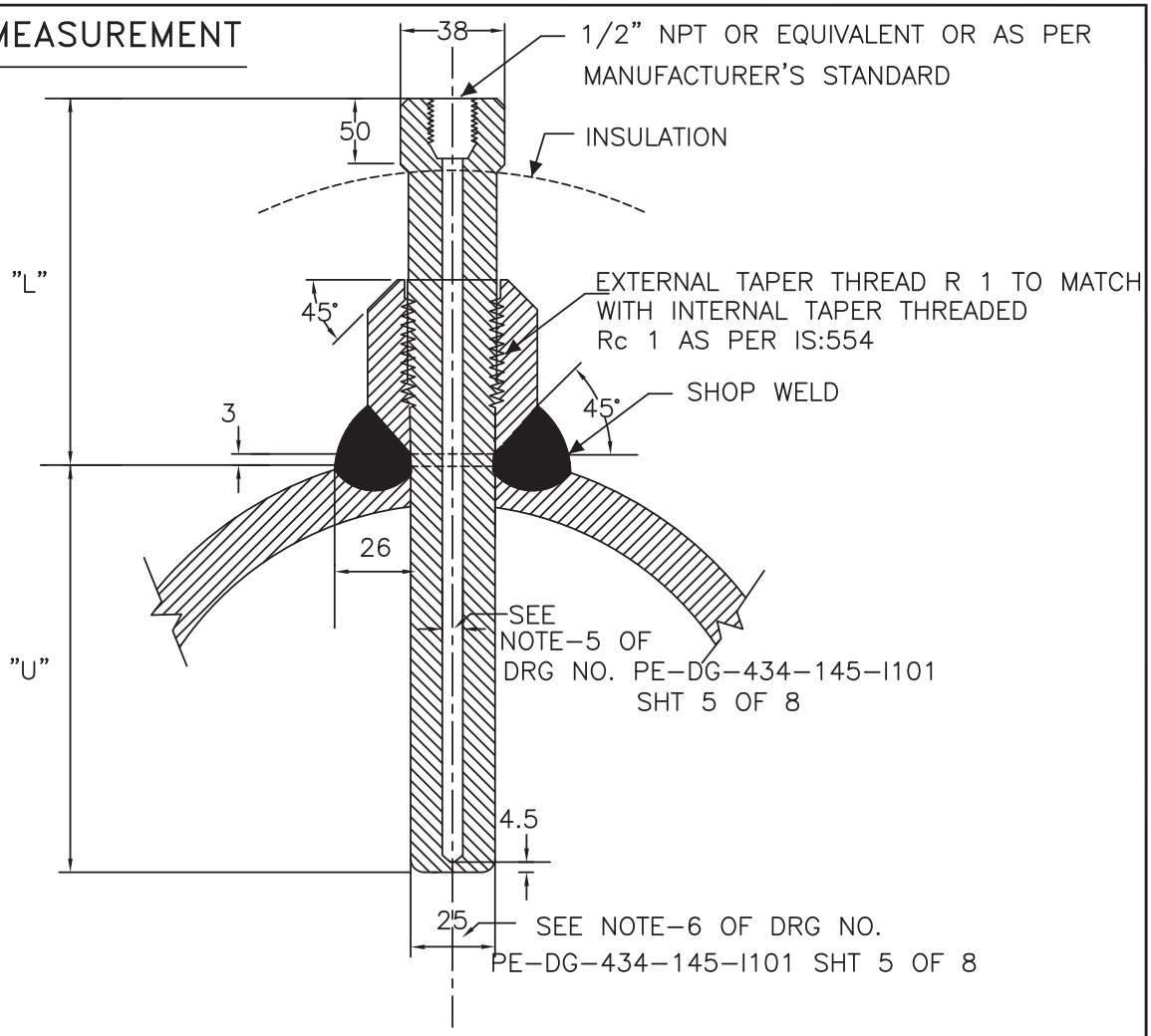

NOTES :-

1. THIS TYPE OF TEMPERATURE BOSS IS APPLICABLE FOR THE PROCESS PRESS/ TEMP. BELOW 40 KG/CM2(g)/400°C.
2. SEE NOTES-2 TO 9 IN SHT. 5 OF 8 OF THIS DRG.
3. ALL DIMENSIONS ARE IN MM UNLESS OTHERWISE INDICATED.

	TITLE :	DRG. NO.
	INST. STUB DETAILS (TEMP)	PE-DG-434-145-I101
	(APPLICABLE FOR PIPE SIZE ABOVE 4")	REV. 00
	[PROCESS PRESS < 40 Kg/Cm2 (g),TEMP < 400 °C]	SH. 06 OF 08 SHS.

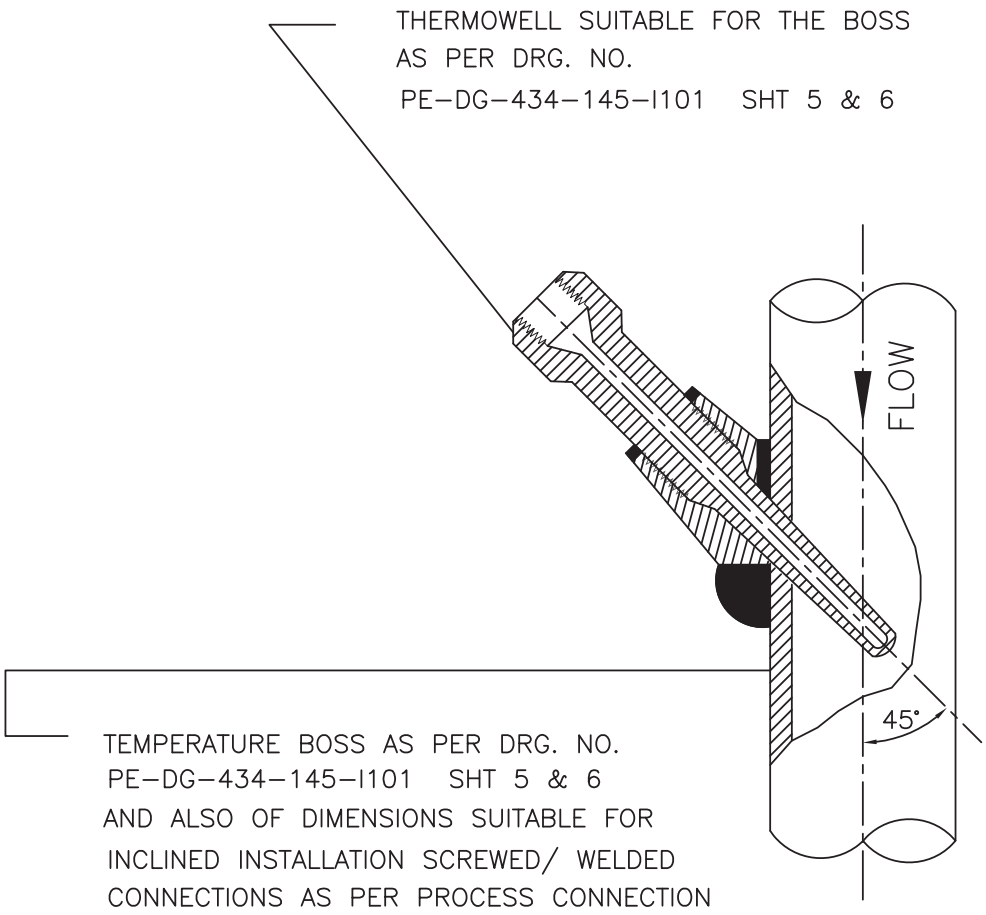

NOTES :-

1. INCLINED INSTALLATION OF THERMOWELL SHALL BE APPLICABLE FOR 4" AND SMALLER LINE SIZE BUT LIMITED TO MIN. 3" LINE SIZE.
2. FOR 2" AND SMALLER LINE SIZE NECESSARY EXPANDER OF 3" SIZE OF MAIN PIPING SPECIFICATION SHALL BE USED.
3. THIS TYPE OF INSTALLATION IS APPLICABLE FOR HORIZONTAL AND VERTICAL PIPE SECTION.
4. FOR STEAM SERVICES EXPANDER SECTION MAY BE USED ONLY IN VERTICAL RUN.
5. THE EXPANDER SECTION SHALL BE OF ADEQUATE LENGTH (ATLEAST 3-4 TIMES DIA OF THE MAIN PROCESS PIPE AT BOTH SIDE OF INSTALLED THERMOWELL).

TITLE :

THERMOWELL INSTALLATION

DRG. NO.

PE-DG-434-145-I101

REV. 00

SH. 07 OF 08 SHS.

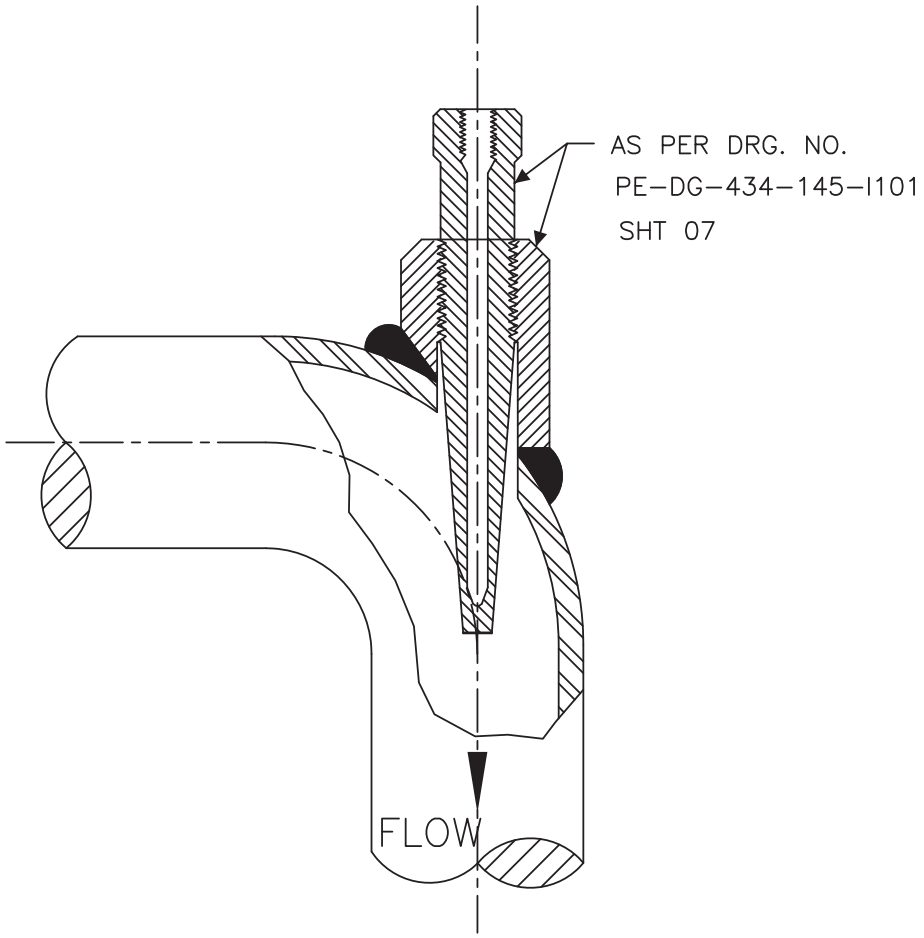

NOTES :-

1. FLOW INSTALLATION OF THERMOWELL SHALL BE APPLICABLE FOR 4" AND SMALLER LINE SIZE BUT LIMITED TO MINIMUM 3" LINE SIZE. THIS DETAIL IS APPLICABLE FOR THERMOWELL INSTALLATION IN BEND PIPES.
2. FOR 2" AND SMALLER LINE SIZE NECESSARY EXPANDER OF ELBOW FORM (AS SHOWN) OF 3" SIZE SHALL BE USED.
3. ELBOW EXPANDER SECTION IN HORIZONTAL PLANE TO BE USED FOR LIQUID SERVICE. FOR STEAM SERVICES EXPANDER SECTION TO BE USED IN VERTICAL PLANE.

TITLE :

THERMOWELL INSTALLATION
(IN BEND PIPES)

DRG. NO.
PE-DG-434-145-I101

REV. 00
SH. 08 OF 08 SHS.

INSTRUMENT INSTALLATION DRAWING

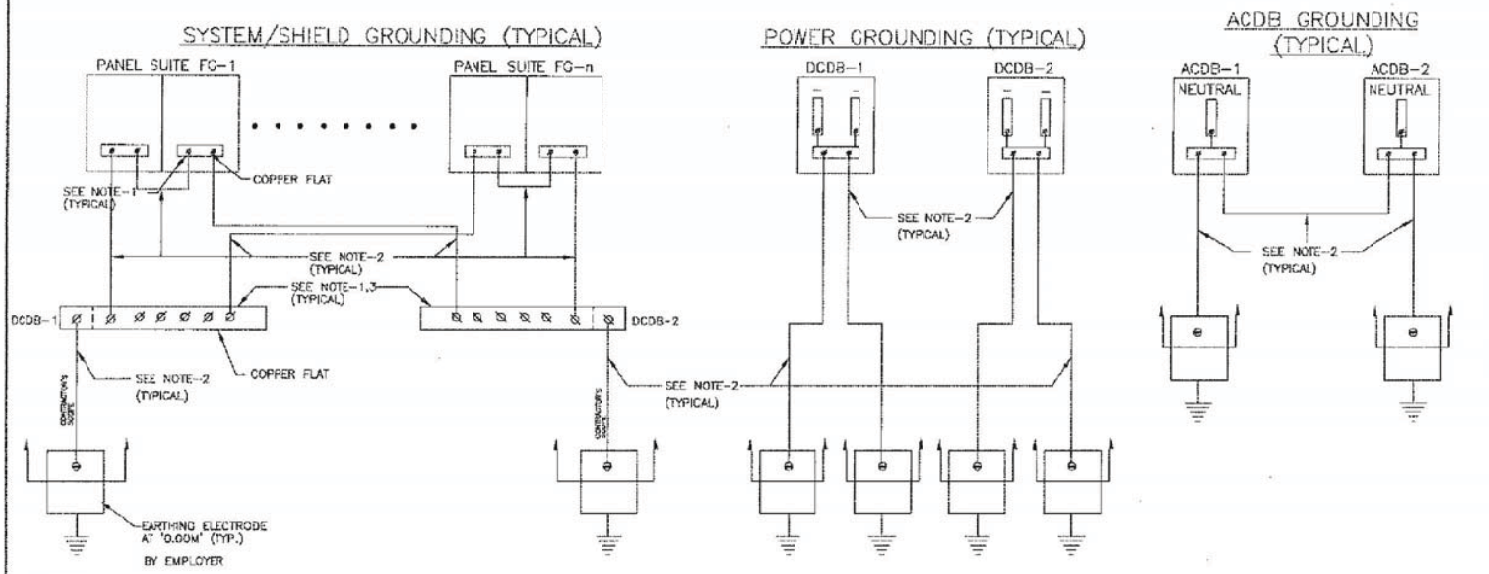

NOTES:--

1. SUPPLY, ERECTION, TERMINATION OF CABLES, FLATS ETC. REQUIRED FOR PROPER GROUNDING OF CONTRACTOR's CONTROL SYSTEM, SYSTEM CABINETS, POWER SUPPLY CABINETS ETC. ARE IN THE SCOPE OF CONTRACTOR.
2. CABLE IN CONTRACTOR'S SCOPE.
3. TO BE LOCATED IN DCDB.
4. EXACT LOCATION, ARRANGEMENTS OF FLATS ETC. SHALL BE AS FINALISED WITH CONTRACTOR. DURING DETAILED ENGINEERING.
5. CABINET BODY, CABINET BOTTOM PLATE, CABINET DOORS ARE TO BE CONNECTED TO PANEL EARTH FLAT COPPER CABLE BY CONTRACTOR.

FOR TENDER PURPOSE ONLY

This document is the property of NATIONAL THERMAL POWER CORPORATION LTD. No part of this document will be reproduced by any means without the written permission.

एन टी पी सी NTPC

N T P C LIMITED
(A GOVERNMENT OF INDIA ENTERPRISE)
ENGINEERING DIVISION

PROJECT: TYPICAL THERMAL POWER PROJECT

TITLE: INSTRUMENTATION CABLING DIAGRAM
GROUNDING SCHEME FOR CABINETS / PANELS / POWER SUPPLY

REV.NO.	DESCRIPTION	DRAWN	DESIGN	CHKD.	M	E	C	C&I	ARCH.	APPD	DATE
A	FIRST ISSUE										21.08.12

CLEARED BY

SIZE	SCALE	DRG. NO.	REV. NO.
A3	N.I.S.	0000-999-PO-A-019A SH-1 OF 2	A

GROUNDING FOR EACH ROW OF PANELS
(TYPICAL)

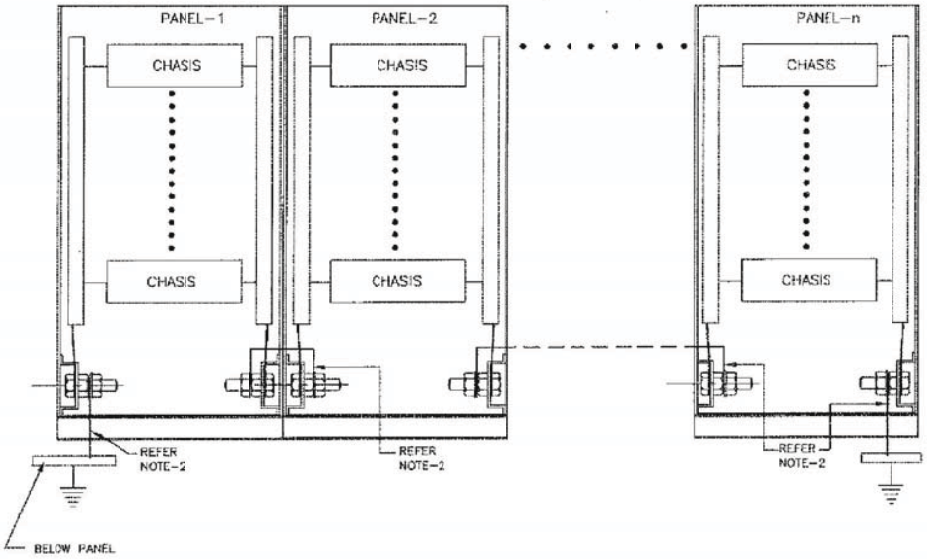

NOTES:-

1. SUPPLY, ERECTION, TERMINATION OF CABLES, FLATS ETC. REQUIRED FOR PROPER GROUNDING OF CONTRACTOR's CONTROL SYSTEM, SYSTEM CABINETS, POWER SUPPLY CABINETS ETC. ARE IN THE SCOPE OF CONTRACTOR.
2. CABLE IN CONTRACTOR'S SCOPE.
3. TO BE LOCATED IN DCDB.
4. EXACT LOCATION, ARRANGEMENTS OF FLATS ETC. SHALL BE AS FINALISED WITH CONTRACTOR. DURING DETAILED ENGINEERING.
5. CABINET BODY, CABINET BOTTOM PLATE, CABINET DOORS ARE TO BE CONNECTED TO PANEL EARTH FLAT COPPER CABLE BY CONTRACTOR.

FOR TENDER PURPOSE ONLY

This document is the property of NATIONAL THERMAL POWER CORPORATION LTD.
No part of this document will be reproduced by any means without the written permission.

एन टी पी सी NTPC

NTPC LIMITED
(A GOVERNMENT OF INDIA ENTERPRISE)
ENGINEERING DIVISION

PROJECT: TYPICAL THERMAL POWER PROJECT

TITLE: INSTRUMENTATION CABLING DIAGRAM
GROUNDING SCHEME FOR CABINETS / PANELS / POWER SUPPLY

REV.NO.	DESCRIPTION	DRAWN	DESIGN	CHKD.	M	E	C	C&I	ARCH.	APPD	DATE
A	FIRST ISSUE										21.08.12

CLEARED BY

SIZE	SCALE	DRG. NO.	REV. NO.
A3	N.T.S.	0000-999-POI-A-019A SH-2 OF 2	A

This document is the property of NATIONAL THERMAL POWER CORPORATION LTD.
No part of this document will be reproduced by any means without the written permission.

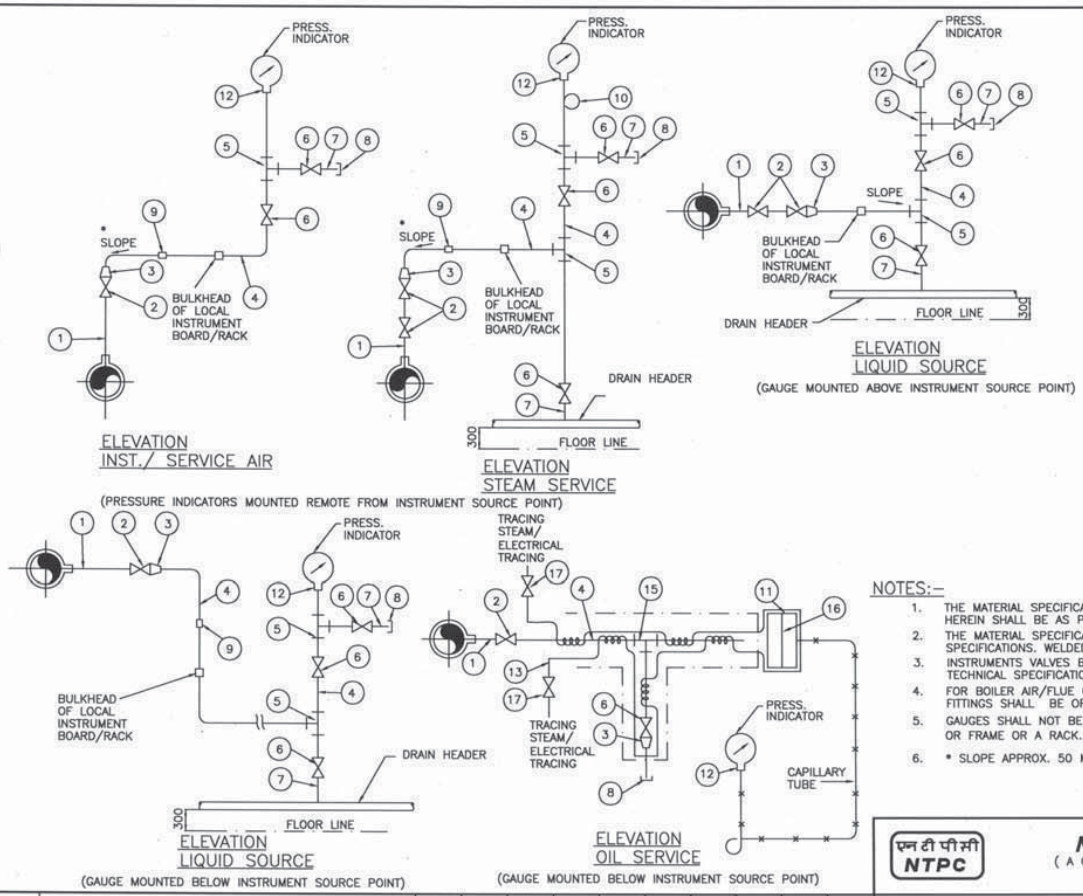

LIST OF MATERIALS

ITEM NO.	DESCRIPTION
1.	1/2", 3/4", 1" NPS SCH 40/80/160/XXS/P91 (AS PER PROCESS REQUIREMENT) NIPPLE OF MATERIAL SAME AS THAT OF MAIN PIPE.
2.	1/2"/3/4"/1' SW GLOBE VALVE/GATE VALVE
3.	3/4" / 1" x 1/2" SW REDUCING INSERT
4.	1/2" / 3/4" PIPE
5.	1/2" / 3/4" SW EQUAL TEE
6.	1/2" / 3/4" SW GLOBE VALVE.
7.	1/2" / 3/4" NPS SW x 1/2" / 3/4" NPT(M) CARBON/ALLOY STEEL NIPPLE.
8.	1/2" / 3/4" NPT(F) CAP.
9.	1/2" / 3/4" PIPE UNION.
10.	6" SS SYPHON
11.	1/2" BLIND 300lbs RF ANSI FLANGE DRILLED AND TAPED FOR 1" NPT PIPE.
12.	SUITABLE ADAPTER.
13.	1/4" CHROME MOLY STEEL TUBE.
14.	
15.	1"/3/4" SW EQUAL TEE.
16.	DIAPHRAGM(WAFER ELEMENT)
17.	ISOLATION VALVE 316 SS,1/4"SW

NOTES:-

1. THE MATERIAL SPECIFICATION AND SCHEDULE NO. OF IMPULSE PIPE & NIPPLE AS LISTED HEREIN SHALL BE AS PER TECHNICAL SPECIFICATIONS.
2. THE MATERIAL SPECIFICATION AND RATING OF FITTINGS AS LISTED SHALL BE AS PER SPECIFICATIONS. WELDED/THREADED FITTINGS SHALL CONFIRM TO ANSI-B.16-11.
3. INSTRUMENTS VALVES BODY STEM MATERIAL AND PRESSURE CLASS SHALL BE AS PER TECHNICAL SPECIFICATIONS.
4. FOR BOILER AIR/FLUE GAS SERVICES SOURCE CONNECTIONS IMPULSE PIPING AND ALL FITTINGS SHALL BE OF 3/4" NB SIZE.
5. GAUGES SHALL NOT BE MOUNTED ON THE PIPE. IT WILL BE MOUNTED ON A CHANNEL OR FRAME OR A RACK..
6. * SLOPE APPROX. 50 MM / METRE.

FOR TENDER PURPOSE ONLY

एन टी पी सी NTPC

N T P C LIMITED
(A GOVERNMENT OF INDIA ENTERPRISE)
ENGINEERING DIVISION

PROJECT: TYPICAL THERMAL POWER PROJECT

TITLE: INSTRUMENT INSTALLATION DIAGRAM (FOR PRESSURE GAUGE)

REV.NO.	DESCRIPTION	DRAWN	DESIGN	CHKD.	M	E	C	C&I	ARCH.	APPD	DATE
A	FIRST ISSUE							T.G.			21.08.12

CLEARED BY

SIZE	SCALE	DRG. NO.	REV. NO.
A3	N.T.S.	0000-999-POI-A-022	A

This document is the property of NATIONAL THERMAL POWER CORPORATION LTD.
No part of this document will be reproduced by any means without the written permission.

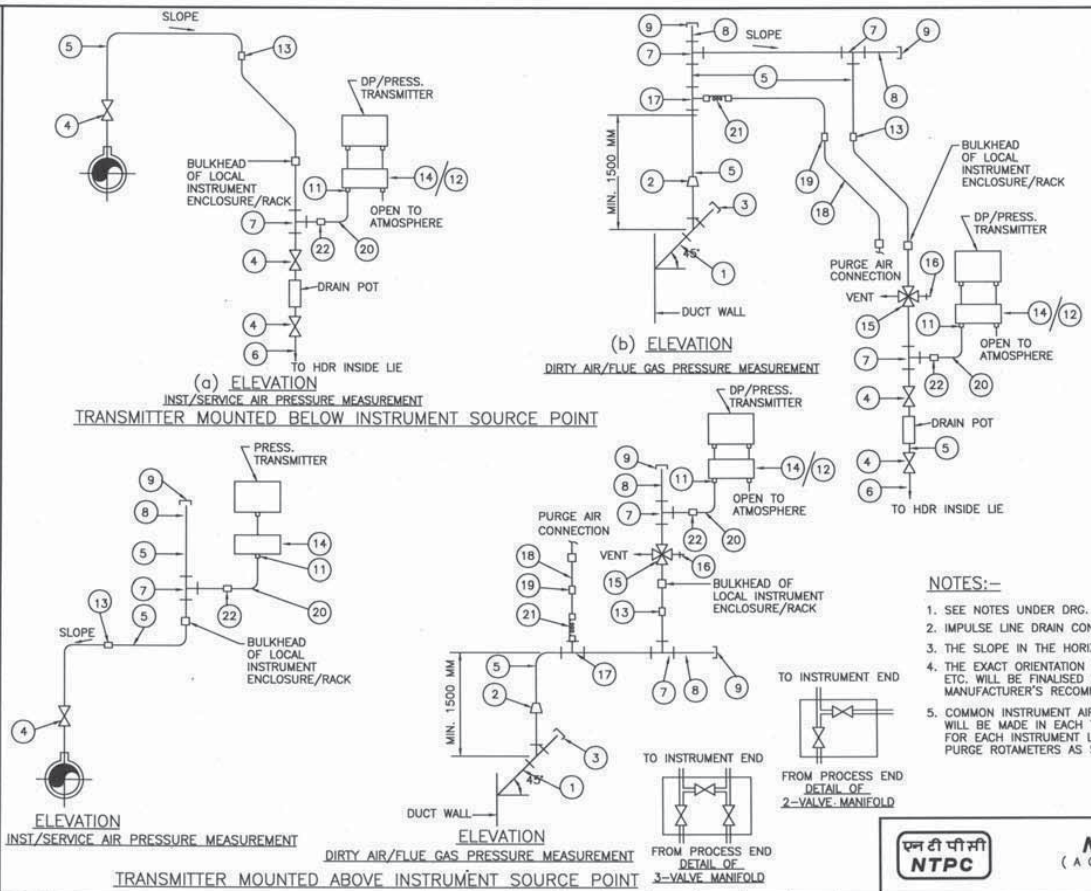

LIST OF MATERIALS

ITEM NO.	DESCRIPTION
1.	42 X 405 MM M.S. BLACK PIPE
2.	M42x2 TO 3/4" REDUCING INSERT
3.	M42x2(F) M.S.CAP
4.	3/4" SW GLOBE VALVE/GATE VALVE
5.	3/4" NPS PIPE
6.	3/4" NPS SW 3/4" NPT(M) CS/AS NIPPLE
7.	3/4" SW EQUAL TEE
8.	3/4" NPS SCH 80 CARBON/ALLOY STEEL NIPPLE
9.	3/4" NPT(F) CS/AS CAP
10.	3/4" SW CS/AS EQUAL CROSS
11.	1/2" TUBE ADOPTER
12.	3 VALVE MANIFOLD
13.	3/4" PIPE UNION
14.	2 VALVE MANIFOLD
15.	3/4" SW 4 WAY VALVE
16.	QUICK DISCONECT FITTING
17.	3/4"SWx1/2"SW BRANCH TEE
18.	1/2" NB SEAMLESS GI PIPE
19.	1/2" NPT (F) GI FITTING
20.	SS TUBE
21.	FLEXIBLE HOSE WITH ONE END SOCKET WELDED (PIPE SIDE) & OTHER END WITH SUITABLE FITTINGS.
22.	3/4" x 1/2" S.S. TUBE UNION

NOTES:-

1. SEE NOTES UNDER DRG. NO.0000-999-POI-A-022.
2. IMPULSE LINE DRAIN CONNECTIONS SHALL BE DONE AS PER TECHNICAL SPECIFICATIONS
3. THE SLOPE IN THE HORIZONTAL OF THE IMPULSE PIPE SHALL BE APPROX. 50 mm/mtr.
4. THE EXACT ORIENTATION OF THE TRANSMITTERS WITH RESPECT TO VALVE MANIFOLDS ETC. WILL BE FINALISED DURING DETAILED ENGINEERING KEEPING IN VIEW THE MANUFACTURER'S RECOMMENDATIONS.
5. COMMON INSTRUMENT AIR HEADER (1"NB) USING REDUNDANT AIR FILTER REGULATORS WILL BE MADE IN EACH TRANSMITTER ENCLOSURE REQUIRING PURGE AIR. PURGE AIR FOR EACH INSTRUMENT LINE SHALL BE TAPPED FROM THIS HEADER USING INDIVIDUAL PURGE ROTAMETERS AS SHOWN IN DRG. NO. 0000-999-POI-A-034 TYPICALLY.

FOR TENDER PURPOSE ONLY

एन टी पी सी NTPC

N T P C LIMITED
(A GOVERNMENT OF INDIA ENTERPRISE)
ENGINEERING DIVISION

REV.NO.	DESCRIPTION	DRAWN	DESIGN	CHKD.	M	E	C	C&I	ARCH.	APPD	DATE
A	FIRST ISSUE							T.G.			21.08.12

CLEARED BY

PROJECT: TYPICAL THERMAL POWER PROJECT

TITLE: INSTRUMENT INSTALLATION DIAGRAM (PRESSURE MEASUREMENT USING PRESS / DP TRANSMITTERS (INST./SERVICE, DIRTY AIR/FLUE GAS)

SIZE	SCALE	DRG. NO.	REV. NO.
A3	N.T.S.	0000-999-POI-A-023	A

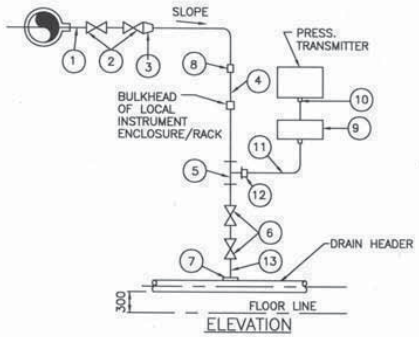

ELEVATION

TRANSMITTER MOUNTED BELOW INSTRUMENT SOURCE POINT

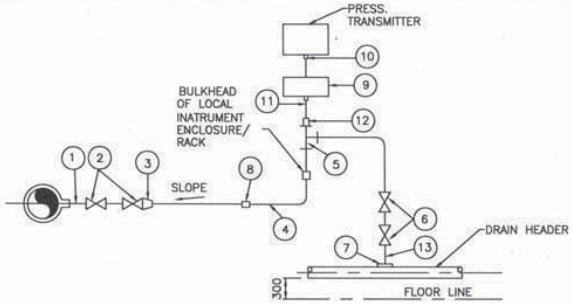

ELEVATION

TRANSMITTER MOUNTED ABOVE INSTRUMENT SOURCE POINT

LIQUID PRESSURE MEASUREMENT

LIST OF MATERIALS

ITEM NO.	DESCRIPTION
1.	1/2"/ 3/4"/1"NPS SCH. 80/160/XXS/P91 NIPPLE OF MATERIAL SAME AS THAT OF MAIN PIPE.
2.	3/4"/1" SW GLOBE VALVE.
3.	3/4"/1" TO 1/2" REDUCING INSERT
4.	1/2" NPS PIPE
5.	1/2" SW EQUAL TEE
6.	1/2"SW GLOBE VALVE
7.	1/2"NPS SCH. 80/160 SWx1/2"CS/AS COUPLER
8.	1/2" PIPE UNION
9.	2/3 VALVE MANIFOLD (FOR DETAIL SEE DRAWING NO.0000-102-POI-A-023.
10.	SUITABLE ADAPTER
11.	SS TUBE
12.	1/2" PIPE x 1/2"TUBE UNION
13.	1/2"NPS SCH. 80/160 SWx1/2" NPT(M) CS/AS NIPPLE

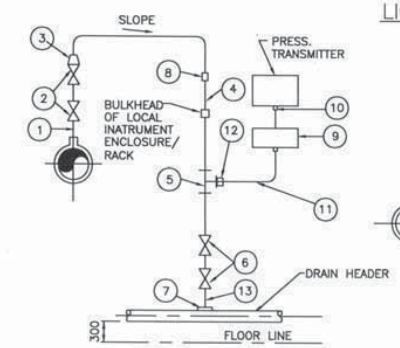

ELEVATION

TRANSMITTER MOUNTED BELOW INSTRUMENT SOURCE POINT

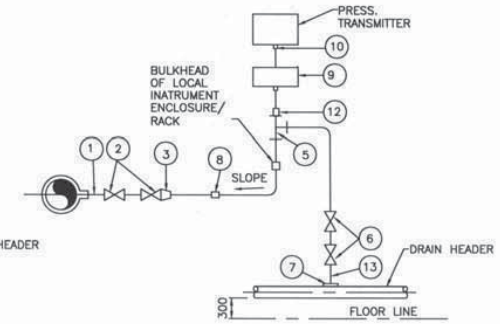

ELEVATION

TRANSMITTER MOUNTED ABOVE INSTRUMENT SOURCE POINT

STEAM PRESSURE MEASUREMENT

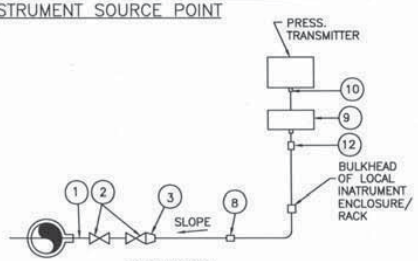

ELEVATION

VACCUM PRESSURE MEASUREMENT

NOTES:-

1. SAME NOTES UNDER DRG. NO. 0000-999-POI-A-023.
2. FOR VACUUM APPLICATION OTHER PORT OF TRANSMITTER SHALL BE KEPT OPEN TO ATMOSPHERE.

FOR TENDER PURPOSE ONLY

एन टी पी सी NTPC

N T P C LIMITED
(A GOVERNMENT OF INDIA ENTERPRISE)
ENGINEERING DIVISION

PROJECT: TYPICAL THERMAL POWER PROJECT

TITLE: INSTRUMENT INSTALLATION DIAGRAM (PRESSURE MEASUREMENT USING PRESS /DP TRANSMITTERS STEAM/LIQUID VACUUM)

REV.NO.	DESCRIPTION	DRAWN	DESIGN	CHKD.	M	E	C	C&I	ARCH.	APPD	DATE
A	FIRST ISSUE							T.G.			21.08.12

CLEARED BY

SIZE	SCALE	DRG. NO.	REV. NO.
A3	N.T.S.	0000-999-POI-A-025	A

This document is the property of NATIONAL THERMAL POWER CORPORATION LTD.
No part of this document will be reproduced by any means without the written permission.

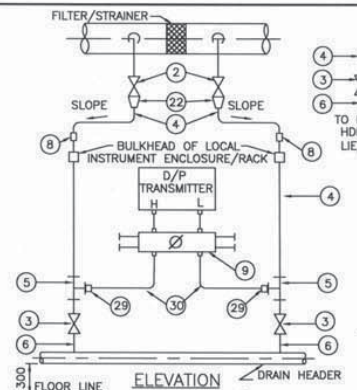

ELEVATION
(LIQUID SERVICE)
TRANSMITTER MOUNTED BELOW INSTRUMENT SOURCE POINT

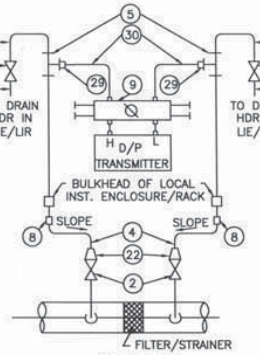

ELEVATION
(LIQUID SERVICE)
TRANSMITTER MOUNTED ABOVE INSTRUMENT SOURCE POINT

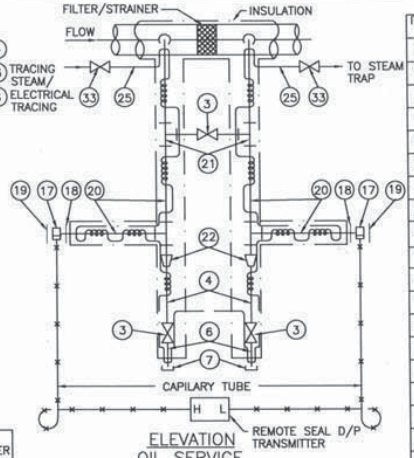

ELEVATION
OIL SERVICE

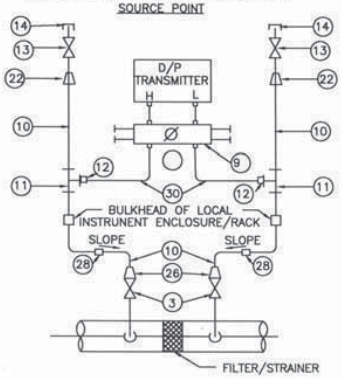

ELEVATION
CLEAN GAS/AIR SERVICE

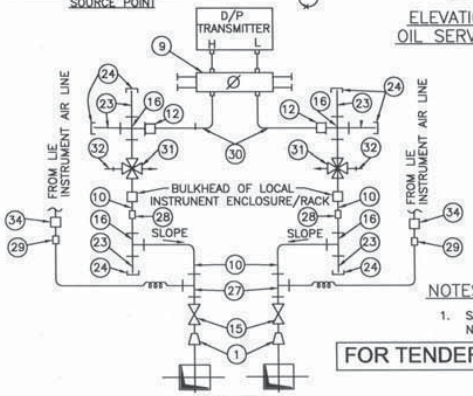

ELEVATION
FUEL GAS SERVICE/DIRTY AIR SERVICE

TRANSMITTER MOUNTED ABOVE INSTRUMENT SOURCE POINT
DIFFERENTIAL PRESSURE MEASUREMENT

NOTES:-

1. SAME NOTES AS UNDER DRG. NO. 0000-999-POI-A-023.

FOR TENDER PURPOSE ONLY

LIST OF MATERIALS

ITEM NO.	DESCRIPTION
1.	42x2 TO 3/4" SW REDUCING INSERT.
2.	3/4" SW GLOBE VALVE.
3.	1/2" SW GLOBE VALVE FOR LIQUID APPLICATION & 3/4"/1" IN GAS/AIR APPLICATION
4.	1/2" NPS 40/80/160 (AS PER PROCESS REQUIREMENT) CARBON/ALLOY STEEL PIPE.
5.	1/2" SW EQUAL TEE.
6.	1/2" NPS SW x 1/2" NPT (M) NIPPLE.
7.	1/2" NPT (F) CAP.
8.	1/2" PIPE x 1/2" PIPE UNION.
9.	5 VALVE MANIFOLD (FOR DETAIL REFER DRAWING NO.0000-999-POI-A-026.
10.	3/4" SCH 80 CARBON/ALLOY STEEL PIPE.
11.	3/4"/1/2" SW EQUAL TEE.
12.	3/4"x1/2" TUBE UNION.
13.	1/2" SCREWED GLOBE VALVE.
14.	1/2" NPT (M) PLUG.
15.	3/4" SW GATE VALVE.
16.	3/4" SW EQUAL CROSS.
17.	WAFER ELEMENT FOR USE WITH 3"ANSI R.F. VALVE.
18.	3"BLIND 300lbs R.F. WELD NECK FLANGE DRILLED FOR 1" SCH. 40/80 PIPE.
19.	3" BLIND FLANGE.
20.	1"NPS SCH. 40/80 (AS PER PROCESS REQUIREMENT) CS PIPE.
21.	1" SW EQUAL TEE.
22.	3/4" x 1/2"SW REDUCING INSERT.
23.	3/4" SW x 3/4" NPT (M) CS/AS NIPPLE
24.	3/4" NPT (F) CS/AS CAP.
25.	1/4" NPS ALLOY STEEL PIPE.
26.	1" x 3/4" SW REDUCING INSERT.
27.	3/4" SW x 1/2" PSW BRANCH TEE.
28.	3/4" PIPE UNION
29.	1/2" CLAMP UNION (THREADED) SUITABLE FOR FLEXIBLE CONNECTION OF NYLON REINFORCED PVC TUBE.
30.	SS TUBE
31.	3/4" SW 4 WAY VALVE.
32.	QUICK DISCONNECT FITTINGS.
33.	1/4" SW ISOLATION VALVE 316SS
34.	1/2" x 1/2" SS PIPE UNION.

एन टी पी सी
NTPC

N T P C LIMITED
(A GOVERNMENT OF INDIA ENTERPRISE)
ENGINEERING DIVISION

PROJECT: TYPICAL THERMAL POWER PROJECT

TITLE: INSTRUMENT INSTALLATION DIAGRAM
DIFF. PRESS.MEASUREMENT (LIQUID, OIL, AIR/GAS SERVICE)

REV.NO.	DESCRIPTION	DRAWN	DESIGN	CHKD.	M	E	C	C&I	ARCH.	APPD	DATE
A	FIRST ISSUE							T.G.			21.08.12

CLEARED BY

SIZE	SCALE	DRG. NO.	REV. NO.
A3	N.T.S.	0000-999-POI-A-030	A

This document is the property of NATIONAL THERMAL POWER CORPORATION LTD.
No part of this document will be reproduced by any means without the written permission.

This document is the property of NATIONAL THERMAL POWER CORPORATION LTD.
No part of this document will be reproduced by any means without the written permission.

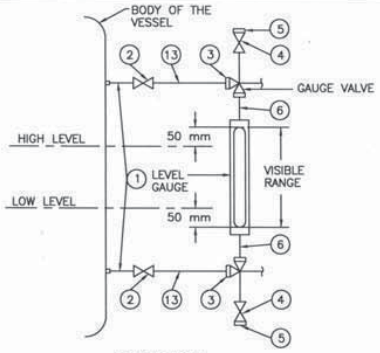

ELEVATION

LOCAL LEVEL INDICATION USING GAUGE GLASS

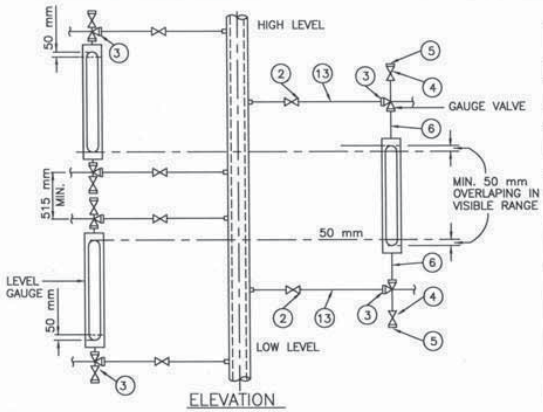

ELEVATION

LOCAL LEVEL INDICATION USING MULTIPLE GAUGES FOR INCREASED RANGE NOT COVERED IN A SINGLE UNIT

LIST OF MATERIALS

ITEM NO.	DESCRIPTION
1.	3/4"/1" NPS SCH.40/80/160/P91 (AS PER PROCESS REQUIREMENT) CARBON /ALLOY STEEL PIPE.
2.	3/4" SW GLOBE VALVE.
3.	3/4" SW UNION.
4.	3/4" NPT GLOBE VALVE.
5.	3/4" NPT (M) CAP.
6.	3/4" NPT (F) UNION CONNECTION.
7.	1" SW EQUAL UNION.
8.	1" x 1/2" SW REDUCING INSERT.
9.	1" SW EQUAL TEE.
10.	1/2" SW GLOBE VALVE.
11.	1/2" NPS SWx1/2" NPT(M) CS/AS NIPPLE.
12.	1/2" NPT (F) CAP
13.	3/4"x1/2" NPS SCH.40/80 CS/AS PIPE.
14.	1/2" NPS SCH.80/160 CS/AS NIPPLE.
15.	1" SW GLOBE VALVE.

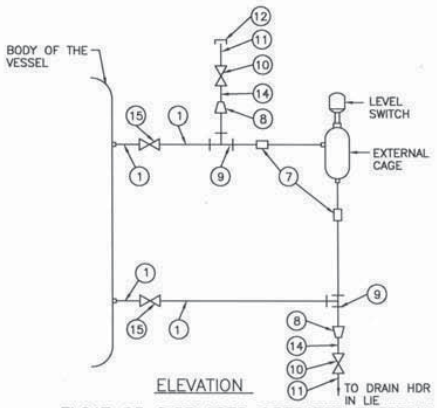

ELEVATION

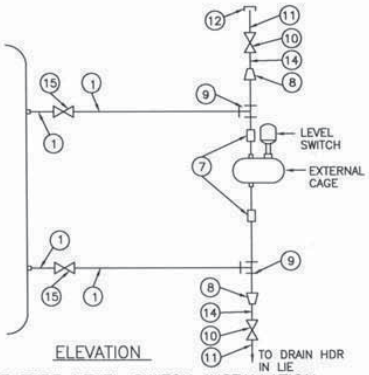

ELEVATION

FLOAT OR DISPLACER OPERATED EXTERNAL CAGE TYPE LEVEL SWITCH INSTALLATION

NOTES:–

1. FOR LEVEL GAUGE 3/4" AND FOR LEVEL SWITCH 1' PROCESS CONNECTION SHALL BE PROVIDED.
2. NOTES UNDER DRG. NO. 0000–999–POI–A–023 (WHICHEVER ARE RELEVENT).

FOR TENDER PURPOSE ONLY

एन टी पी सी NTPC

N T P C LIMITED
(A GOVERNMENT OF INDIA ENTERPRISE)
ENGINEERING DIVISION

PROJECT: TYPICAL THERMAL POWER PROJECT

TITLE: INSTRUMENT INSTALLATION DIAGRAM (LEVEL GAUGE & SWITCHES)

REV.NO.	DESCRIPTION	DRAWN	DESIGN	CHKD.	M	E	C	C&I	ARCH.	APPD	DATE
A	FIRST ISSUE							T.G.			21.08.12

CLEARED BY

SIZE	SCALE	DRG. NO.	REV. NO.
A3	N.T.S.	0000-999-POI-A-031	A

MANDATORY SPARES

C	**C&I Mandatory spares**		**LOT**
I	**C&I Mandatory spares**		**LOT**
1	Level Probe RF type(For Pyrite Hopper)	2	No.
2	Level Probe RF type(For Bunker)	1	No.
3	Pressure Switch(field)	3	No.
4	Temperature Switch	2	No.
5	Pressure Switch	2 nos of each type	No.
6	Air filter cum regulator cum lubricator	2	No.
II	**Instrumentation Cables, Internal Wiring & Electrical Field**		
1	Pre-fabrication cable of each type	10% of installed quantity	
2	Pre-fabricated cable connector of each type	10% or 1 no. each type and model, whichever is more	
3	Other cables	5% of each type, pair and size of actual installed quantity.	
III	**Microprocessor based/PLC based Control/Electronic based Control Panel (if applicable)**		
1	Fully programmed controller & electronic modules of each type (as applicable)	10% or 1 No., whichever is more	
2	Power supply modules (if applicable)	10% or 1 No., whichever is more	
IV	**SOLENOID VALVES**		
1	**SOLENOID VALVES**	10% or 2 nos. of each type and model, which ever is more.	
V	**Power cylinders**		
	Complete power cylinder assembly	10% or 1 no. each type and model, whichever is more	
VI	**Limit switch**	10% or 1 no. each type and model, whichever is more	

SUB VENDOR LIST

NTPC	PROJECT : Patratu STPS Phase-I (3 X800MW)	LIST OF ITEMS REQUIRING QP	
	PACKAGE : EPC PACKAGE	APPROVAL & ACCEPTABLE	REVISION NO : 00
	CONTRACTOR :BHEL Ltd	VENDOR AS APPROVED BY	DATE : 26.04.2017
	CONTRACT NO : CS-9585-001-2		

No.	Major Equipment	QP Inspection Category	QP No. 9585-001-QVI-Q	QP Submission SCH	QP Approval SCH	Proposed Sub Supplier	Country	SS Approval Status	SS Detail Sub.SCH	SS Approval SCH	Sub QR	Remark
		II				Forbes Arca	Pune	A				Approvd up to 4" and 300 Class. "DR" for Higher rating and Size.
		*				Daume Regelamaturean GmbH	Germany	DR				M/s BHEL will forward only three proposals after details review of NTPC Technical specification requirements.
		*				Metso Singapore PTE ltd.	South Korea	DR				
		*				Severn Glocon	Chennai	DR				
		*				Spx Corporation	USA	DR				
		*				Ringo Valvulas SL	Spain	DR				
		*				Valvitalia SPA	Italy	DR				
		*				R K Controls	Thane	DR				
		*				Circor (Leslie)	Coimbatore	DR				
		*				Spx Flow Technologies	USA	DR				
		*				Circor (Leslie)	Coimbatore	DR				
		*				Schenjiang valve co. ltd.	China	DR				
		*				Spx Flow Technologies	Ahamadabad	DR				
		*				WEIR Valves and Controls	UK	DR				
		*				WALDEMAR PRUSS ARMATURENFABRIK GMBH	Germany	DR				
		*				BOMAFA Special valve solutions Pvt. Ltd.	Ahmedabad	DR				
		*				Suzhou delan enfery science and tehnology co. Ltd.	China	DR				
22	Temperature Transmitter	III				EMERSON	U.S.A/Pawane / Singapore	A			Sub QR	
	(Single and Duel Input)	III				Yokogawa	Japan	A				Final testing at M/S YIL,Bangalore is also acceptable
		III				Moore	USA	A				
		III				M System	JAPAN	A				
		III				ABB	GERMANY/ Bangalore	A				
		III				ENDRESS & HOUSER	Aurangabad	A				
		*				Khrone		DR				M/s BHEL will forward only two proposals after details review of NTPC Technical specification requirements.
		*				Tokyo Keiso	Japan	DR				
		*				Honeywell	Pune	DR				
		*				INOR	Sweden	DR				
		*				P & F	Bangalore	DR				
		*				Siemens		DR				
		*				Yamatake	JAPAN	DR				
		*				Yemari	JAPAN	DR				
		*				Foxboro		DR				
23	Conduits/Pipe(GI)					Refer Electrical List						
24	Electronic transmitters (pressure, DP,Flow)	III				EMERSON (Rosemount)	USA/ Pawane	A			Sub QR	
		III				FUJI ELECTRIC	France	A				
		III				YOKOGAWA	JAPAN	A				Testing and Calibration at M/s YIL, Bangalore is also acceptable.

5 of 26

Bharat Heavy Electricals Limited PS-MKTG Delhi

C & M Deptt.

NTPC	PROJECT : Patratu STPS Phase-I (3 X800MW)	LIST OF ITEMS REQUIRING QP	
	PACKAGE : EPC PACKAGE	APPROVAL & ACCEPTABLE	REVISION NO : 00
	CONTRACTOR :BHEL Ltd	VENDOR AS APPROVED BY	DATE : 26.04.2017
	CONTRACT NO : CS-9585-001-2		

No.	Major Equipment	QP Inspection Category	QP No. 9585-001-QVIQ	QP Submission SCH	QP Approval SCH	Proposed Sub Supplier	Country	SS Approval Status	SS Detail Sub.SCH	SS Approval SCH	Sub QR	Remark
		III				YOKOGAWA	Bangalore	A				EJA- E series 110,430,530
		III				ABB	Bangalore	A				Model - 2600 T
		III				ABB	GERMANY / Italy	A				Model - 2600 T
		III				Siemons	France / Kalwa	A				
		III				Honeywell	Pune	A				
		III				Laxson Automation	Daman	A				SMAR Make
		III				Baldota	Mumbai	A				SMAR Make
		*				ENDRESS & HOUSER	Aurangabad/ Germany	DR				
		*				CHINO	Ghaziabad	DR				
25	Thermocouples, RTD & Thermowell	III				HERAUS SENSOR	GERMANY	A			Sub QR	
		III				WISE Control	Korea	A				
		II				Tempsens	Udaipur	A				
		II				Pyroelectric	Goa	A				
		II				Detriv Instrumentation & Electronics Ltd	Mumbai	A				
		III				Minco	USA	A				
		III				OKAZAKI corporation	JAPAN	A				
		III				Yamari	JAPAN	A				
		III				Yamari	Singapore	A				For RTD Reference list and Performance feedback is to be submitted.
		III				ABB(SENSYCON)	Germany	A				
		III				EMERSON (Rosemount)	Germany	A				
		II				EMERSON (Rosemount)	Pawane	A				Imported from Emerson, Germany (make)
		II				Thermal Instruments(GIC)	Savanlwadi	A				
		II				Techno Instruments	Ahamadabad	A				
		II				GOA Instrument Industries	GOA	A				For Thermowell only
		*				GOA Instrument Industries	GOA	DR				M/s BHEL will forward only two proposals after details review of NTPC Technical specification requirements.
		*				WIKA	Pune	DR				
		*				Toshniwal Industries	Ajmer	DR				
		*				E & H	Aurangabad	DR				
		*				Nesstech	Vapi	DR				
		*				Instrustial Instruments	Kolkatta	DR				
		*				Exotherm	Thane	DR				
		*				Baumer Technologies	Vapi	DR				
		*				Eleind Engineering	Noida	DR				
		*				Siemens India	Gurgaon	DR				
		II				Jindal Electronics	Roorkee	A				For Gentrator turbine & Motor
26	Ultrasonic type level Transmitter	III				E & H	Aurangabad/ Germany	A			Sub QR	
		III				EMERSON	Pawane	A				
		III				SIEMENS MILTRONICS	CANADA	A				
		III				Nivelco	Hungary	A				
		*				Vega	Gennany	DR				

6 of 26

Bharat Heavy Electricals Limited PS-MKTG Delhi

C & M Deptt. Patratu Vidyut Utpadan Nigam Limited Distt. Ramgarh (Jharkhand)

214

NTPC	PROJECT : Patratu STPS Phase-I (3 X800MW)	LIST OF ITEMS REQUIRING QP	
	PACKAGE : EPC PACKAGE	APPROVAL & ACCEPTABLE	REVISION NO : 00
	CONTRACTOR :BHEL Ltd	VENDOR AS APPROVED BY	DATE : 26.04.2017
	CONTRACT NO : CS-9585-001-2		

No.	Major Equipment	QP Inspection Category	QP No. 9585-001-QVIQ	QP Submission SCH	QP Approval SCH	Proposed Sub Supplier	Country	SS Approval Status	SS Detail Sub.SCH	SS Approval SCH	Sub QR	Remark
		*				Khrona	France / USA / Pune	DR				M/s BHEL will forward only two proposals after details review of NTPC Technical specification requirements.
		*				Yokogawa	Bangalore	DR				
		*				P&F	Germany	DR				
		*				Magnetrol	Belgium	DR				
		*				ABB	Germany / India	DR				
		*				Fobes Marshall	Pune	DR			Sub QR	
27	Orifice plate assembly	III				Instrumentation Limited	Palghat	A				
		III				Microprecision	Palwal	A				
		III				Starmech	Pune	A				
		III				Flow Star	Faridabad	A				
		III				SEIKO	Austria	A				
		III				MINCO India Pvt. Ltd.	GOA	A				Up to 32"
		III				MINCO India Flow Elements Pvt. Ltd.	GOA	A				Up to 28"
		III				WISE Control	Korea	A				
		III				T M Technomatic	Italy	A				
		*				IEPL	Hyderabad	DR				
		*				Engg. Specialities	Kolkata	DR				
		*				BALIGA	CHENNAI	DR				
		*				Pyroelectric	Mumbai	DR				
		*				Hydropneumatics	Mapusa	DR				
		*				Tansa Equipment Pvt. LTd.	Thane	DR				
		*				Dynamic Fluid Vales Pvt. Ltd.	Belgaun	DR				
28	Pressure, DP Gauge	III				BUDENBERG	UK	A				
		III				ASHCROFT	USA/Germany/ India	A				
		III				Wika	GERMANY	A				
		III				WISE Control	Korea	A				
		III				Nagano KEIKI	Japan	A				
		III				H.Guru South India	Bangalore	A				Not for MS & FW application
		III				A.N. Instruments	Kolakatia	A				Not for MS & FW application
		III				Gauge Bourdon	Panvel	A				
		III				Goa Thermostatic	GOA	A				Not for MS & FW application
		III				Wika	Pune	A				DR for MS & FW application
		III				Baumer	Vapi	A				DR for MS & FW application
		III				Precision mass products Pvt. Ltd.	Gandhinagar	A				Not for MS & FW application
		III				H Guru	Rishra/Muzaffarpur	A				Not for MS & FW application
		*				US Gauge	USA	DR				
		*				Winters	USA	DR				
		III				Forbes Marshall	Hyderabad	A				
		*				Manometer	Mumbai	DR*				
		III				Walchandnagar Industries Ltd.	Dharwad	A				
		III				Nesstech	Vapi	A				DP Gauge for M/s Nesstech, Japan
		*				Gauges Bourdon	UK	DR				
		*				Fisher Mess	Germany	DR				

7 of 26

Bharat Heavy Electricals Limited PS-MKTG Delhi

Patratu Vidyut Utpadan Nigam Limited C & M Deptt. Distt-Ramgarh (Jharkhand)

NTPC	PROJECT : Patratu STPS Phase-I (3 X660MW)	LIST OF ITEMS REQUIRING QP	
	PACKAGE : EPC PACKAGE	APPROVAL & ACCEPTABLE	REVISION NO : 00
	CONTRACTOR : BHEL Ltd	VENDOR AS APPROVED BY	DATE : 26.04.2017
	CONTRACT NO : CS-9585-001-2		

No.	Major Equipment	QP Inspection Category	QP No. 9585-001-QVIQ	QP Submission SCH	QP Approval SCH	Proposed Sub Supplier	Country	SS Approval Status	SS Detail Sub.SCH	SS Approval SCH	Sub QR	Remark
		*				Protech Control	Kolkata	DR				
		*				New Scientific	Kolkata	DR				
		*				PTCI	Kolkata	DR				
29	Level gauge (Transperent & Reflex, Tubular type)	III				Main Contractor approved Sources		A				
30	Press, DP, Vaccum Switch	III				SOR	USA	A			Sub QR	
		III				DRESSOR (ASHCROFT)	USA/Germany	A				
		III				ITT BARTON	USA	A				
		III				HERION	GERMANY	A				
		III				BARKSDALE	GERMANY	A				
		*		*		Nagano KEIKI	Japan	DR				
		II				Switzer Process Instrument	Chennai	A				Up to 40kg/cm2 & not for Compound Switch and except 900 series
		II				Trafag	Gurgaon	A				Up to 40kg/cm2 & not for Compound Switch
		II				Switzer Process Instrument	Ghaziabad	A				Up to 40kg/cm2 & not for Compound Switch
		III				Delta control	UK	A				
		I				Gauges Bourdon (GIC)	Panvel	A				Up to 40kg/cm2 & not for Compound Switch
		I				ASHCROFT	Gandhinagar	A				
		*				Wika	Pune	DR				
		III				Gorgeion	France	A				
		III				United Electric	USA	A				M/s BHEL will forward only two proposals after details review of NTPC Technical specification requirements.
		*				SMC	Japan	DR				
		*				Neodyne	USA	DR				
		*				IMI NORGEN	Noida	DR				
		*				WISE Control	Korea	DR				
		*				Baumer	Vapi	DR				
		*				Vasu Tech	New Delhi	DR				
		III				Bell & Krich	Germany	DR				
31	Temperature Switch	III				SOR	USA	A			Sub QR	
		III				DRESSOR (ASCHROFT)	USA/Germany	A				
		III				ITT BARTON	USA	A				
		III				DELTA CONTROLS	UK	A				
		I				Switzer Process Instrument	Chennai	A				up to 200 Deg. C
		I				Switzer Process Instrument	Ghaziabad	A				up to 200 Deg. C
		II				Trafag	Gurgaon	A				up to 200 Deg. C
		I				ASHCROFT	Gandhinagar	A				
		*				Wika	Pune	DR				
		III				Gorgeion	France	A				
		III				United Electric	USA	A				
		*				SMC	Japan	DR				
32	Flow switch	III				UNIVERSAL FLOW METER	USA	A			Sub QR	
		III				Switzer	Chennai	A				

8 of 26

Bharat Heavy Electricals Limited PS-MKTG Delhi

Patratu Vidyut Utpadan Nigam Limited C & M Deptt. Distt-Ramgarh (Jharkhand)

216

NTPC	PROJECT : Patratu STPS Phase-I (3 X800MW)	LIST OF ITEMS REQUIRING QP	
	PACKAGE : EPC PACKAGE	APPROVAL & ACCEPTABLE	REVISION NO : 00
	CONTRACTOR :BHEL Ltd	VENDOR AS APPROVED BY	DATE : 26.04.2017
	CONTRACT NO : CS-9585-001-2		

No.	Major Equipment	QP Inspection Category	QP No. 9585-001-QVIQ	QP Submission SCH	QP Approval SCH	Proposed Sub Supplier	Country	SS Approval Status	SS Detail Sub.SCH	SS Approval SCH	Sub QR	Remark
		*				PMT Engineers	Ahemdabad	DR				
		*				Flowtech	Kolkatta	DR				
		*				Parker Hannfin India Pvt Ltd		DR				
42	Instrument valves	III				BHEL	Trichy	A				
		II				Excel Hydro	Mumbai	A				
		II				Instrumentation Ltd.,	Palghat	A				
		III				Swagelok	USA	A				
		III				Parker	USA	A				
		II				HP Valves and fittings	CHENNAI	A				
		II				Fluid control Pvt. Ltd.	Pune	A				
		II				Baldota	Mumbai	A				
43	Valve manifolds	III				Excel hydro	Mumbai	A				
		III				SCHNEIDER	Germany	A				
		III				Anderson Greenwood	USA	A				
		III				Astech	Mumbai	A				
		III				HP Valves and fittings	CHENNAI	A				
		III				Fluid control Pvt. Ltd.	Pune	A				
		III				Microprecision	Faridabad	A				
		III				Parker	USA	A				
		III				Swagelock	USA	A				
		III				Baldota	Mumbai	A				
		*				Metpress Engg. works	Kolkata	DR				
		*				Flow tech	Kolkata	DR				
44	Local Instrument Enclosure/Rack	I				Pyrotech	Udaipur	A				
		I				Instrumentation Limited	Kota	A				
		I				Sajas electrical	Trichurapalli	A				
		I				Prammen	Puddukottai	A				
		I				Chemin	Pondicherry	A				
		*				Forbes Marshall	Pune	DR				
		*				Positronica	Vadodara	DR				
		*				Procon	Chennai	DR				
45	Instrument Cables	I				Paramount	Khuskhera	A				PVC,FRLS type,ROP
		I				Polycab	Daman	A				PVC,FRLS type,ROP
		I				Delton	Faridabad	A				PVC,FRLS type,ROP
		I				KEI	Bhiwadi	A				PVC,FRLS type
		I				Elkey Telelinks	Faridabad	A				PVC,FRLS type
		I				CORDS	Chopanki	A				PVC,FRLS type,ROP
		I				CORDS	Kaharani	A				PVC,FRLS type,ROP
		I				Nicco	Kolkata	A				PVC,FRLS type
		II				TEW & C	USA	A				
		II				Habia cables	Sweeden	A				
		II				Kerpen cables	Germany	A				
		II				Lapp cables	Germany	A				
		II				Thermo electra Bv	Neiherland	A				
		I				Universal Cable	Saina	A				PVC,FRLS type
		I				Thermocables	Hyderabad	A				PVC,FRLS type

Bharat Heavy Electricals Limited
PS-MKTG
Delhi

Patratu Thermal Power Station Limited
Dist-Ramgarh(Jharkhand)
C&M
Deptt.

11 07 26

219

NTPC	PROJECT : Patratu STPS Phase-I (3 X800MW)	LIST OF ITEMS REQUIRING QP	
	PACKAGE : EPC PACKAGE	APPROVAL & ACCEPTABLE	REVISION NO : 00
	CONTRACTOR :BHEL Ltd	VENDOR AS APPROVED BY	DATE : 26.04.2017
	CONTRACT NO : CS-9585-001-2		

No.	Major Equipment	QP Inspection Category	QP No. 9585-001-Q/VIQ	QP Submission SCH	QP Approval SCH	Proposed Sub Supplier	Country	SS Approval Status	SS Detail Sub.SCH	SS Approval SCH	Sub QR	Remark
		I				MINCO India Flow Elements Pvt. Ltd.	GOA	A				
		*				SAMIL	Korea	DR				
		*				MINCO	GOA	DR				
		*				Engg. Specialities	Kolkata	DR				
		*				Pyroelectric	Mumbai	DR				
		*				Hydropneumatics	Mapusa / GOA	DR				
		*				ASIAN INDUSTRIAL VALVES	Chennai	DR				
		*				Dynafluid valves Pvt. Ltd.	Belgium	DR				
49	HIGH Temp. cable (PTFE/FEP)	II				Habia cables	Sweden	A				
		II				Lapp cables	Germany	A				
		II				Kerpen cables	Germany	A				
		II				TEW & C	USA	A				
		II				Thermo-Electra Bv	Netherland	A				
		II				Habia cables	China	A				
		II				Thermocables	Hyderabad	A				
		II				Tempsens	Udaipur	A				
		*				Delton Cables	Faridabad	DR				
		*				RJ Cables	Roorkee	DR				
50	Fiber optic cable	II				HFCL	Goa	A				
		II				R&M	Switzerland	A				
		II				Aksh Fibre	Bhiwadi	A				
		II				Finolex	Pune/Goa	A				
		II				Bita Ericson	Rewa	A				
		II				Molex	UK	A				
		II				Corning	USA	A				
		II				Schneider	GOA	A				Previously known as D Link / Smartlink, Goa
		*				RPG Cables	India	DR				
		*				Unilex Cables	India	DR				
		*				Terracom	India	DR				
51	Pneumatic Actuator (Power Cylinder e. g. FOR SADC)	II				Dong Woo Valve Control Co. LTD	Korea	A				
		II				Shin Hwa Engineering Co. LTD	Korea	A				
		I				Instrumentation Limited	Palghat	A				
		I				Kelton	Cochin(Alleppy)	A				
		I				SMC Pneumatics	Noida	A				Up to 12 Inch only
		I				Rotex	Mumbai	A				Conditional
		*				Emerson Process Management	Chennai	DR				
		*				MIL Controls	Alwaye	DR				
		*				Festo	Bangalore	DR				
		*				IMI Norgen	Noida	DR				
52	Level switch capacitance type	III				ENDRESS & HOUSER	Aurangabad	A			Sub QR	
		III				MAGNETROL	BELGIUM	A				
		III				SBEM	PUNE	A				
		III				PUNE TECHTROL	PUNE	A				

Bharat Heavy Electricals Limited PS-MKTG Delhi

C&M Deptt. Patratu Vidyut Utpadan Nigam Limited (Distt-Ramgarh (Jharkhand))

NTPC	PROJECT : Patratu STPS Phase-I (3 X800MW)	LIST OF ITEMS REQUIRING QP	
	PACKAGE : EPC PACKAGE	APPROVAL & ACCEPTABLE	REVISION NO : 00
	CONTRACTOR : BHEL Ltd	VENDOR AS APPROVED BY	DATE : 26.04.2017
	CONTRACT NO : CS-9585-001-2		

No.	Major Equipment	QP Inspection Category	QP No. 9585-001-QVI-Q	QP Submission SCH	QP Approval SCH	Proposed Sub Supplier	Country	SS Approval Status	SS Detail Sub.SCH	SS Approval SCH	Sub QR	Remark
		III				LEVCON	KOLKATA	A				
		III				Nivo Controls	Indore	A				
		*				V AUTOMAT	New Delhi	DR				
		*				D K Instrument	Kolkata	DR				
		*				Siemens	Germany	DR				
		*				ABB	Korea	DR				
		*				Rosemount	Korea	DR				
53	Transducer	II				AE	Mumbai	A				
		II				Southern Transducer	Chennai	A				
		II				Elster	Mumbai	A				
		III				Camille Bauer	Germany	A				
		III				Metrawat	Germany	A				
		II				Rishab	Nasik	A				
		*				Pyrotech	Udaipur	DR				
		*				Masibus	Gandhinagar	DR				
		*				SIEMENS	Germany	DR				
54	Mini UPS up to 3.5 KVA	III				EMERSON	Mumbai	A				
		III				EMERSON	Pune	A				
		III				Hitachi Hi- Rel	Gandhinagar	A				
		III				APC	Bangalore	A				
		III				APLAB	Mumbai	A				
		III				Delta	Gurgaon	A				
		*				Powertronix	Bangalore	DR				
		*				DUBAS ENGG.PVT.LTD., BANGALORE		DR				
		*				Grid power conversion Pvt Ltd.		DR				
		*				Schneider	Bangalore	DR				
55												
56												

15 07 26

Electricals Limited PS-MKTG Delhi

C & M Deptt.

NTPC	PROJECT : Patratu STPS Phase-I (3 X800MW)	LIST OF ITEMS REQUIRING QP	
	PACKAGE : EPC PACKAGE	APPROVAL & ACCEPTABLE	REVISION NO : 00
	CONTRACTOR :BHEL Ltd	VENDOR AS APPROVED BY	DATE : 26.04.2017
	CONTRACT NO : CS-9585-001-2		

No.	Major Equipment	QP Inspection Category	QP No. 9585-001-QVI-Q	QP Submission SCH	QP Approval SCH	Proposed Sub Supplier	Country	SS Approval Status	SS Detail Sub.SCH	SS Approval SCH	Sub QR	Remark
		III				Gauges Bourdon (GIC)	Panvel	A				
		*				Nisan Scientific Process	Navi Mumbai	DR				
57	Air filter regulator	III				Fairchild	USA	A				
		III				Shavo Norgen	Mumbai	A				
		III				SMC Pneumatics	NOIDA	A				
		III				Emerson (Asco)	Chennai	A				
		III				Festo	Bangalore	A				
		III				Placka	Chennai	A				
						Divya Control Elements	Gujarat	DR				
58	Copper tubing/Brass connectors	III				Main Contractor approved Sources		A				
59	Coupling / Interposing relays	III				PARAMOUNT	BANGALORE	A				
		III				OMRON		A				
		III				OEN		A				
		III				Jyoti	Baroda	A				
		III				ELSTA	SWITZERLAND	A				
		*				Schneider	Germany	DR				
		*				Siemens	Germany	DR				
		*				Phoenix	Germany	DR				
		*				Finder		DR				
60	Solenoid valve	III				Rotex	Vadodara	A			Sub QR	
		III				Avcon	Mumabi	A				
		III				Herion	Germany	A				
		III				IMI NORGEN	GERMANY	A				
		III				Jafferson	Argentina	A				
		III				Asco	Chennai/USA	A				
		III				Festo	Bangalore	A				
		III				SMC	Noida	A				
		III				Parker	Brand Name	A				
		*				Schneider	Germany	DR				
		*				Neucon Industries Pvt. Ltd.		DR				
						Forbes Marshall Arca Pvt. Ltd.	Pune	A				Approved up to 15 , 900 Class.
62	Guided wave/Radar type level transmitter	III				Magnetrol	Belgium	A			Sub QR	
		III				Endress & Houser	Germany/ Aurangabad	A				
		III				Emerson Process Management	Sweden/ PAWANE	A				
		III				ABB(K-Tech)	USA	A				
		II				Supreme Technology	Thane	A				Make M/s Siemens, Canada
		*				Yokogawa	Japan	DR				
		*				ABB	India	DR				
		*				P & F	Bangalore	DR				

15 07 28

Bharat Heavy Electricals Limited PS-MKTG Delhi

C & M Deptt. Patratu Thermal Power Station Bharat Heavy Electricals Limited Distt. Ramgarh (Jharkhand)

NTPC	PROJECT : Patratu STPS Phase-I (3 X800MW)	LIST OF ITEMS REQUIRING QP	
	PACKAGE : EPC PACKAGE	APPROVAL & ACCEPTABLE	REVISION NO : 00
	CONTRACTOR : BHEL Ltd	VENDOR AS APPROVED BY	DATE : 26.04.2017
	CONTRACT NO : CS-9585-001-2		

No.	Major Equipment	QP Inspection Category	QP No. 9585-001-QVI-Q	QP Submission SCH	QP Approval SCH	Proposed Sub Supplier	Country	SS Approval Status	SS Detail Sub.SCH	SS Approval SCH	Sub QR	Remark
		*				Khrone	France	DR				
		*				HONEYWELL	Pune	DR				
		*				Vega	Germany / India	DR				
		*				Siemens	India	DR				
		*				SBEM	Pune	DR				
63	Maintenance and Calibration Equipment					Main Contractor will propose the vendors during detail Engineering.						
64	Temperature Gauge	III				BUDENBERG	UK	A				
		III				DRESSOR (ASHCROFT)	USA/Germany	A				
		III				Wika	GERMANY/ Pune	A				
		III				WISE Control	Korea	A				
		III				Nagano KEIKI	Japan	A				
		III				H.Guru South India	Bangalore	A				
		III				A.N. Instruments	Kolakatta	A				
		III				NUOVA FIMA	ITALY	A				
		III				Goa Thermostatic	Goa	A				
		III				Goa Instrument Industries	Goa	A				
		III				Baumer	Vapi	A				
		III				Precision mass products Pvt. Ltd.	Gandhinagar	A				
		III				H Guru	Rishra/Muzaffarpur	A				
		III				Baumer	Vapi	A				
		III				Forbes Marshall	Hyderabad	A				
		III				Gauges Bourdon (GIC)	Panvel	A				
		*				Konics	Korea	DR				
		*				Pyroelectric	GOA	DR				M/s BHEL will forward only two proposals after details review of NTPC Technical specification requirements.
		*				Winlers Gauge	USA	DR				
		*				Walchandnagar Industries Ltd.	Dharwad	DR				
		III				Nasstech	Vapi	A				
		*				US Gauge	USA	DR				
66	Terminal Block (Cage and Clamp type)	III				Weidmuller	Germany	A				
		III				Phoenix	Germany / India	A				
		III				Wago	Germany / India	A				
		III				Elmex	Vadodara	A				CE Mark only
67	FRP Junction Box for C&I system	III				BHEL Approved Sources		A				

Bharat Heavy Electricals Limited PS-MKTG Delhi

C & M Dept. Patratu Thermal Power Station Distt-Ramgarh (Jharkhand)

16 07 26

Yadav,

224

NTPC	PROJECT : Patratu STPS Phase-I (3 X800MW)	LIST OF ITEMS REQUIRING QP	
	PACKAGE : EPC PACKAGE	APPROVAL & ACCEPTABLE	REVISION NO : 00
	CONTRACTOR :BHEL Ltd	VENDOR AS APPROVED BY	DATE : 26.04.2017
	CONTRACT NO : CS-9585-001-2		

No.	Major Equipment	QP Inspection Category	QP No. 9585-001-QVI Q	QP Submission SCH	QP Approval SCH	Proposed Sub Supplier	Country	SS Approval Status	SS Detail Sub.SCH	SS Approval SCH	Sub QR	Remark
118	Level Switch (RF Type)	II				EIP Enviro	Noida	A			Sub QR	
		II				FLOW STAR	Faridabad	A				
		II				Nivo Controls	Indore	A				
		*				BHEL		DR				

22 out 26

Electricals Limited -MKTG Delhi

Patratu Vidyut Utpadan Nigam Limited Distt-Ramgarh(Jharkhand) Deptt.

NTPC	PROJECT : Patratu STPS Phase-I (3 X800MW)	LIST OF ITEMS REQUIRING QP	
	PACKAGE : EPC PACKAGE	APPROVAL & ACCEPTABLE	REVISION NO : 00
	CONTRACTOR :BHEL Ltd	VENDOR AS APPROVED BY	DATE : 26.04.2017
	CONTRACT NO : CS-9585-001-2		

No.	Major Equipment	QP Inspection Category	QP No. 9585-001-QVIQ	QP Submission SCH	QP Approval SCH	Proposed Sub Supplier	Country	SS Approval Status	SS Detail Sub.SCH	SS Approval SCH	Sub QR	Remark
		I				Cords Cable	Bhiwadi / Kaharani	A				

LEGENDS :

1.0 SYSTEM SUPPLIER / SUB SUPPLIER APPROVAL STATUS CATEGORY (SHALL BE FILLED BY NTPC)

A - For those items proposed vendor is acceptable to NTPC, subject to meeting the NTPC Specificaiton requirement. To be indicated with letter "A" in the list alognwith the condition of approval, if any.

DR - For those items "Detailed Required" for NTPC review. To be identified with letter "DR" in the list.

NOTED : For these items vendors are approved by Main Supplier and accepted by NTPC without specific vendor approval from NTPC. To be identified with "NOTED"

2.0 QP INSPECTION CATEGORY :
CAT - I : For those items the Quality Plans are approved by NTPC and final acceptance will be on physical inspection witness by NTPC
CAT - II : For those items the Quality Plans are approved by NTPC. However no physical inspection shall be done by NTPC. The final acceptance by NTPC shall be on the basis of review of documents.

CAT-III:

UNITS/WORKS : Place of manufacturing- Place of main supplier of multi units/works.

* - Inspection category will be decided during vendor evaluation.

NOTE - 1 : EMPTY CABINETS, COMPUTERS, SIGNAL ISOLATOR/ MULTIPLIER, MCB, TB, POWER SUPPLY ETC. SHALL ALSO BE ACCEPTABLE FROM INDEGENEOUS SOURCES AGREED BY NTPC IN QP. IF THE TOTAL INTEGRATED PANEL AND FAT IS CONDUCTED INDEGENEOUSLY ITEM TO BE TREATED AS CAT - I.
NOTE - 2 : Mandatory Sapre will be treated as CAT-III
NOTE - 3 : For the items not appearing in the preaward list, bidder and NTPC will mutually discussed in future.

NOTE - 4 : Intergration testing of DDCMIS shall be done with monitor connected to the LVS workstation. This wouled be tied up in the QAP/ATST. Dispatch of LVS can be allowed like a CAT-III item but only after successful testing of funcaality as indiacted in QP and completion of ATST of first unit.

NOTE - 5 : C&I items intergral for skid,Fan, Motor,Pump etc instrument shall be supplied as per OEM standred/ approved soureces.

NOTE - 6 : for instrumentation cable quantity less than 1 km of each type inspection category is III and for less then 2.5 km of each type inspection category is CAT-II
FORMAT NO. : QS-01-QAI-P-1/F3-R0 Engg. Div/QA&I

Bharat Heavy Electricals Limited PS-MKTG Delhi

26 07 26.

PRASHANT P. PATIL
DGM (QA-CCF)

AMIT YADAV
Mgr. MKTG.

BHEL C & M Deptt. Bharat Heavy Electricals Limited Patratu Distt-Ramgarh (Jharkhand)

PEM SUB VENDOR LIST AS ON 3/28/2018

Sl No	Package Name	Supplier Name	Supplier Communication Address	Supplier Works Address
1	PRESSURE SWITCH/DIFF. PRESSURE SWITCH	SOR INC.	LARRY DEGARMO/Avdhesh Chandra, 14685 W. 105TH STREET LENEXA Phone- 09810905139, Pincode : 66215 Email : Ldegarmo@sorinc.com, avdhesh@sherman-india.com,	Works-1->LARRY DEGARMO/ ROY STUMBOUGH 14685 W. 105TH STREET, LENEXA -KANSAS- USA Phone- 913-888-0767 FAX : 913-888-0767 Pincode : 66215 Email : rstumbough@sorinc.com
		DRESSER INDUSTRIES INC.	Mr. Nishit Patel/Mr. Anuj Verma Plot No.2306, Phase II, GIDC Chhatral Kalol Phone- 02764-233682 Pincode : 382729 Email : Nishit.patel@ashcroftindia.com	
		GENERAL INSTRUMENTS CONSORTIUM	Mr. Amarendra Kulkarni 194/195, Gopi Tank Road, Off. Pandurang Naik Marg, Mahim Mumbai Phone- 9323195251 Pincode : 400016 Email : amarendra@general-gauges.com	
		Barksdale GmbH, Germany	Michael Weileder Dorn Assenheimer, Strasse 27 Reichelsheim Phone- +91-9999107840 Pincode : D-61203 Email : msingh@barksdale.de	
		SWITZER PROCESS INSTRUMENTS PVT. LTD.	Mr. V S Jayaprakash, No.127 & 128, SIDCO North Phase, Ambattur Estates CHENNAI Phone- 044-26252017/2018 Pincode : 600050 Email : marketing@switzerinstrument.com	Works-1->C S Shankar 127, Sidco North Phase, Ambattur Estates, -CHENNAI-TAMIL NADU INDIA Phone- 8754491904 FAX : 044-26248849 Pincode : 600050 Email : cservice@switzerinstrument.com
		PRECISION MASS PRODUCTS PVT. LTD.	Mr. Nishit Patel/Mr. Anuj Verma Plot No.2306, Phase II, GIDC Chhatral Kalol Phone- 9999464663 Pincode : 382729 Email : sales@precisionmass.com	Works-1->Mr. Hitesh Parmar/Mr. Hitesh Parmar Plot No.2306, Phase II, GIDC Chhatral, -Kalol-GUJARAT INDIA Phone- 9327359227 FAX : 02764-233440 Pincode : 382729 Email : hitesh.parmar@ashcroftindia.com
		INDFOS (INDIA) LIMITED	MR.L.C.VENKATRANGAN/MR.B.KANNAN New No.17, II Floor, Adwave Towers, Dr.Sevalia Shivaji Salai, T.Nagar Chennai Phone- +91 44 24353407 Pincode : 600017 Email : delhi@indfos.com	
		INDFOS INDUSTRIES LIMITED	B-20-21, INDUSTRIAL AREA, MEERUT ROAD, GHAZIABAD Phone- 0120-2712016 Pincode : Email : mktg@indfos.com	
		Kaustubha Udyog,	S.No. 36/1/1, Sinhgad Road, Vadgaon Khurd, Near Lokmat Press, Pune, Phone- 020-24393577, Pincode : Email : pressure@vsnl.com,	
2	PRESSURE GAUGE/ DIFF.PRESSURE GAUGE	A.N. INSTRUMENTS PVT. LTD.	MARKETING DIVISION, 5th FLOOR, 59-B, CHOWRINGHEE ROAD, KOLKATA Phone- 24757784,22472509 Pincode : 700020 Email : anidel@bol.net.in	Works-1->Mr. Gautam Mukherjee Kusumba,Sonarpur Station Road,P.O. -Narendrapur, -Kolkata-WEST BENGAL INDIA Phone- 9836878855 FAX : 033-24342748 Pincode : 700103 Email : gkm_ani@hotmail.com
		H.GURU INDUSTRIES	Mr. G. D. Hazra/Mr. P. K. Mitra 10 B, HO-CHI-MINH SARANI, KOLKATA Phone- 033 2282 2463 / 1637 Pincode : 700071 Email : mguru@vsnl.net	Works-1->NA NA -- Phone- FAX : Pincode : Email :
		BOSE PANDA INSTRUMENTS PVT.LTD.	Mr. Partha Bose 44, Saheed Hemanta Kumar Bose, Sarani, Kolkata Phone- +91 33 2548 7220 Pincode : 700074 Email : parthabosebpi@gmail.com; bosepanda@vsnl.net	Works-1->Mr. Partha Bose 44, Saheed Hemanta Kumar Bose,Sarani, -Kolkata-WEST BENGAL India Phone- +91 33 2548 7220 FAX : +91 33 2548 0429, Pincode : 700074 Email : parthabosebpi@gmail.com bosepanda@vsnl.net
		PRECISION MASS PRODUCTS PVT. LTD.	Mr. Nishit Patel/Mr. Anuj Verma Plot No.2306, Phase II, GIDC Chhatral Kalol Phone- 9999464663 Pincode : 382729 Email : sales@precisionmass.com	Works-1->Mr. Hitesh Parmar/Mr. Hitesh Parmar Plot No.2306, Phase II, GIDC Chhatral, -Kalol-GUJARAT INDIA Phone- 9327359227 FAX : 02764-233440 Pincode : 382729 Email : hitesh.parmar@ashcroftindia.com
		H.GURU INSTRUMENTS (SOUTH INDIA) P. LTD	32,INDUSTRIAL SUBURB YESWANTHAPUR BANGALORE Phone- 080-23370300, Pincode : 560022 Email : info@hgurusouth.com	Works-1->Shikha Hazra/ Shyamal Hazra 32, Industrial Suburb,Yeshwanthpur -BANGALORE-KARNATAKA INDIA Phone- 080-23370300 FAX : 080-23379890 Pincode : 560022 Email : shikhahazra@hgurusouth.com
		Baumer Technologies India Pvt. Ltd.	Mr. Shyam Warilani/Mr. V Suresh Babu 36, DAMJI SHAMJI INDUSTRIAL COMPLEX, OFF.-MAHAKALI CAVES ROAD, ANDHERI(E) MUMBAI Phone- +91 99589 25151 Pincode : 400093 Email : sales.in@baumer.com	Works-1->Mr. Shyam Warilani/Mr. V Suresh Babu Plot No 34 À GIDC À Phase 1, -VAPI-GUJARAT INDIA Phone- +91 11 4161 7111 FAX : 022 2687 3613 Pincode : 396 195 Email : pbajaj@baumer.com
		FORBES MARSHALL (HYD) LTD.	MR SAILESH PATALAY/MR. M K SRINIVASAN PLOT NO.A-19/2, & T-4/2, IDA, NACHARAM, HYDERABAD Phone- 9849913704 Pincode : 500 076 Email : mksrinivasan@forbesmarshall.com	Works-1->MR G.SRINIVASAN/MR ANUJ MALPANI PLOT NO:A-19/2 & T-4/2,I.DA. NACHARAM , -HYDERABAD-TELANGANA INDIA Phone- 09866550762 FAX : 040 27152193 Pincode : 560076 Email : gshrinivasan@forbesmarshall.com
		GAUGE BOURDON INDIA PVT. LTD.	194/195, Gopi Tank Road, Off Pandurang Naik Marg, Mahim Mumbai, Phone- 011-41607463, Pincode : 400016, Email : gicdelhi@general-gauges.com,	Works-1->Gauge Bourdon India Pvt. Ltd., Plot No-4, 5, 6,Jawahar Co-operative Industrial Estate, -Kalamboli Taluka Panvel-MAHARASHTRA India Phone- 022-27421095, FAX : 022-27421901, Pincode : 410209, Email : info@general-gauges.com
		SCIENTIFIC DEVICES (BOMBAY) PVT LTD,	Office no. 53, Shree Manoshi Complex, Plot No. 5 & 6, Sec-3, Ghansoli (East), Navi Mumbai, Phone- 9892230623, Pincode : 400 701, Email : sdbpl@vsnl.com	Works-1->Scientific Center, Others By-Pass Junction,Near Kalsekar College kausa, mumbra,Thane -Mumbai-MAHARASHTRA INDIA Phone- 022-25491409,9892230623 FAX : Pincode : 400612 Email : sdbpl@vsnl.com
		Nesstech Instruments Private Limited	26/2, G Type, Global Industrial Park Near Nahuli Railway Crossing, Valvada Vapi Phone- 9920576002 Pincode : 396105 Email : sales@nesstech.co.in	Works-1-> Others 26/2, G Type, Global Ind. Park Near Nahuli Railway Crossing, -Vapi-GUJARAT INDIA Phone- 9920576002 FAX : Pincode : 396105 Email : sales@nesstech.co.in, bkapadia@nesstech.co.in
3	TEMPERATURE GAUGE	FORBES MARSHALL (HYD) LTD.	MR SAILESH PATALAY/MR. M K SRINIVASAN PLOT NO.A-19/2, & T-4/2, IDA, NACHARAM, HYDERABAD Phone- 9849913704 Pincode : 500 076 Email : mksrinivasan@forbesmarshall.com	Works-1->MR G.SRINIVASAN/MR ANUJ MALPANI PLOT NO:A-19/2 & T-4/2,I.DA. NACHARAM , -HYDERABAD-TELANGANA INDIA Phone- 09866550762 FAX : 040 27152193 Pincode : 560076 Email : gshrinivasan@forbesmarshall.com
		GOA INSTRUMENTS INDUSTRIES PVT.LTD.,	D2/5, Mapusa Industrial Estate, Mapusa, Goa, Phone- 09326054551, Pincode : 403507, Email : sumukh@goainstruments.com,	Works-1->Mr. S.G. Dixit D2/5, Mapusa Industrial Estate, -Mapusa-GOA INDIA Phone- 09326054551 FAX : 0832-2262331 Pincode : 403 507 Email : sumukh@goainstruments.com

		H.GURU INSTRUMENTS (SOUTH INDIA) P. LTD	32,INDUSTRIAL SUBURB YESWANTHAPUR BANGALORE Phone- 080-23370300, Pincode : 560022 Email : info@hgurusouth.com	Works-1->Shikha Hazra/ Shyamal Hazra 32, Industrial Suburb,Yeshwanthpur -BANGALORE-KARNATAKA INDIA Phone- 080-23370300 FAX : 080-23379890 Pincode : 560022 Email : shikhahazra@hgurusouth.com
		GAUGE BOURDON INDIA PVT. LTD.	194/195, Gopi Tank Road, Off Pandurang Naik Marg, Mahim Mumbai, Phone- 011-41607463, Pincode : 400016, Email : gicdelhi@general-gauges.com,	Works-1->Gauge Bourdon India Pvt. Ltd., Plot No-4, 5, 6,Jawahar Co-operative Industrial Estate, -Kalamboli Taluka Panvel-MAHARASHTRA India Phone- 022-27421095, FAX : 022-27421901, Pincode : 410209, Email : info@general-gauges.com
		H.GURU INDUSTRIES	Mr. G. D. Hazra/Mr. P. K. Mitra 10 B, HO-CHI-MINH SARANI, KOLKATA Phone- 033 2282 2463 / 1637 Pincode : 700071 Email : mguru@vsnl.net	Works-1->NA NA -- Phone- FAX : Pincode : Email :
		GOA THERMOSTATIC INSTRUMENTS PVT.LTD.	FLAT -B , GF, HILL CROWN APTS., COLLEGE ROAD, MAPUSA Phone- Pincode : 403525 Email : gtilworks@pyro-electric.in	Works-1->Mrs Saanvi Naik BICHOLIM, -BICHOLIM-GOA INDIA Phone- 9595855152 FAX : Pincode : 403 529 Email : saanvi.naik@thermostatic.in
		A.N. INSTRUMENTS PVT. LTD.	MARKETING DIVISION, 5th FLOOR, 59-B, CHOWRINGHEE ROAD, KOLKATA Phone- 24757784,22472509 Pincode : 700020 Email : anidel@bol.net.in	Works-1->Mr. Gautam Mukherjee Kusumba,Sonarpur Station Road,P.O. -Narendrapur, -Kolkata-WEST BENGAL INDIA Phone- 9836878855 FAX : 033-24342748 Pincode : 700103 Email : gkm_ani@hotmail.com
		PRECISION MASS PRODUCTS PVT. LTD.	Mr. Nishit Patel/Mr. Anuj Verma Plot No.2306, Phase II, GIDC Chhatral Kalol Phone- 9999464663 Pincode : 382729 Email : sales@precisionmass.com	Works-1->Mr. Hitesh Parmar/Mr. Hitesh Parmar Plot No.2306, Phase II, GIDC Chhatral, -Kalol-GUJARAT INDIA Phone- 9327359227 FAX : 02764-233440 Pincode : 382729 Email : hitesh.parmar@ashcroftindia.com
		Baumer Technologies India Pvt. Ltd.	Mr. Shyam Warilani/Mr. V Suresh Babu 36, DAMJI SHAMJI INDUSTRIAL COMPLEX, OFF.-MAHAKALI CAVES ROAD, ANDHERI(E) MUMBAI Phone- +91 99589 25151 Pincode : 400093 Email : sales.in@baumer.com	Works-1->Mr. Shyam Warilani/Mr. V Suresh Babu Plot No 34 À GIDC À Phase 1, -VAPI-GUJARAT INDIA Phone- +91 11 4161 7111 FAX : 022 2687 3613 Pincode : 396 195 Email : pbajaj@baumer.com
4	LEVEL GAUGE	TOSHNIWAL BROTHERS PVT.LTD.	WORKS:TOSHNIWAL IND.PVT.LTD, INDUSTRIAL ESTATE MAKHUPURA, AJMER Phone- 441171 Pincode : 305002 Email : toshniwalprocess@gmail.com	
		BLISS ANAND PVT. LTD.	Mr. Vikas Anand/ Mr.RGRajan 92B & 93 B , IMT MANESAR Gurgaon Phone- 0124-4366000 TO 9 Pincode : 122001 Email : sales@blissanand.com	Works-1->Mr. Bharat Kumar/ Mr. Sasi Kumar Plot No. 92B & 93B,Sec-V, IMTManesar -GURGAON-HARYANA INDIA Phone- 0124-4366000 TO 9 FAX : 0124-2290884 Pincode : 122002 Email : bharat@blissanand .com
		SIGMA INSTRUMENTS CO.	Gopal Kannan/R Gopinath 201, ANANDRAJ INDUSTRIAL ESTATE, OFF.LBS MARG, SONAPUR LANE, BHANDUP (W) MUMBAI Phone- +919821038162 Pincode : 400078 Email : sales@sigmainstruments.co.in	Works-1->R Gopinath 27 Nahur Udyog Industrial Premises,M.M.Malviya Road, Mulund(-MUMBAI-MAHARASHTRA INDIA Phone- +912225918567 FAX : +912225918566 Pincode : 400080 Email : sales@sigmainstruments.co.in
5	TEMP. ELEMENT	PYRO ELECTRIC INSTRUMENTS GOA PVT.LTD.	M. D. BICHU/R. M. BICHU G.B, HILL CROWN APARTMENTS, COLLEGE ROAD, MAPUSA Phone- 9326114601 Pincode : 403507 Email : priyanka.marketing@pyro-electric.in	Works-1->A A KULKARNI/ VINOD C G PLOT NO. 71,BICHOLIM INDUSTRIAL ESTATE -BICHOLIM-GOA INDIA Phone- 9326114409 FAX : 91 832 2363381 Pincode : 403529 Email : pyroworks@pyro-electric.in
		Baumer Technologies India Pvt. Ltd.	Mr. Shyam Warilani/Mr. V Suresh Babu 36, DAMJI SHAMJI INDUSTRIAL COMPLEX, OFF.-MAHAKALI CAVES ROAD, ANDHERI(E) MUMBAI Phone- +91 99589 25151 Pincode : 400093 Email : sales.in@baumer.com	Works-1->Mr. Shyam Warilani/Mr. V Suresh Babu Plot No 34 À GIDC À Phase 1, -VAPI-GUJARAT INDIA Phone- +91 11 4161 7111 FAX : 022 2687 3613 Pincode : 396 195 Email : pbajaj@baumer.com
		DETRIVE INSTRUMENTATION & ELECTRONICS LTD.	320, TV INDUSTIAL ESTATE, OFF.DR.A.BESANT ROAD, BEHIND GLAXO, WORLI, MUMBAI Phone- 24934125,24938403 Pincode : 400025 Email : trivtech@vsnl.com	Works-1->Mr. A.D.Solomon J-14, MIDC, TARAPORE, BOISER STN., -THANE-MAHARASHTRA India Phone- FAX : Pincode : Email : trivtech@vsnl.com
		Nesstech Instruments Private Limited	26/2, G Type, Global Industrial Park Near Nahuli Railway Crossing, Valvada Vapi Phone- 9920576002 Pincode : 396105 Email : sales@nesstech.co.in	Works-1-> Others 26/2, G Type, Global Ind. Park Near Nahuli Railway Crossing, -Vapi-GUJARAT INDIA Phone- 9920576002 FAX : Pincode : 396105 Email : sales@nesstech.co.in, bkapadia@nesstech.co.in
		Thermal Instrument India Pvt. Ltd.	Mr. Raghavendra M. Kulkarni 194/195, Gopi Tank Road Behind Citylight Cinema,Mahim Mumbai Phone- 09322664709 Pincode : 400016 Email : ramk@giconindia.com	Works-1->Mr. Raghavendra M. Kulkarni Survey No. 250A/B, Post-Mangaon,Tal.- Kudal, Dist.- Sindhudurg, -- MAHARASHTRA India Phone- 09322664709 FAX : 022-24455026 Pincode : 416519 Email : ramk@giconindia.com
		TOSHNIWAL INDUSTRIES PVT. LTD.,	Industrial Estate, Makhupura, Ajmer, Phone- 9352009000, Pincode : 305002, Email : info@tipl.com,	Works-1-> Khasra No.: 218-230& 235, Industrial Estate,Makhupura, -Ajmer-RAJASTHAN India Phone- 9887865856, FAX : 0145-2695174, Pincode : 305002, Email : rajeev.gupta@tipl.com
		GAUGE BOURDON INDIA PVT. LTD.	194/195, Gopi Tank Road, Off Pandurang Naik Marg, Mahim Mumbai, Phone- 011-41607463, Pincode : 400016, Email : gicdelhi@general-gauges.com,	Works-1->Gauge Bourdon India Pvt. Ltd., Plot No-4, 5, 6,Jawahar Co-operative Industrial Estate, -Kalamboli Taluka Panvel-MAHARASHTRA India Phone- 022-27421095, FAX : 022-27421901, Pincode : 410209, Email : info@general-gauges.com
		GOA INSTRUMENTS INDUSTRIES PVT.LTD.,	D2/5, Mapusa Industrial Estate, Mapusa, Goa, Phone- 09326054551, Pincode : 403507, Email : sumukh@goainstruments.com,	Works-1->Mr. S.G. Dixit D2/5, Mapusa Industrial Estate, -Mapusa-GOA INDIA Phone- 09326054551 FAX : 0832-2262331 Pincode : 403 507 Email : sumukh@goainstruments.com
		SCIENTIFIC DEVICES (BOMBAY) PVT LTD,	Office no. 53, Shree Manoshi Complex, Plot No. 5 & 6, Sec-3, Ghansoli (East), Navi Mumbai, Phone- 9892230623, Pincode : 400 701, Email : sdbpl@vsnl.com	Works-1->Scientific Center, Others By-Pass Junction,Near Kalsekar College kausa, mumbra,Thane -Mumbai-MAHARASHTRA INDIA Phone- 022-25491409,9892230623 FAX : Pincode : 400612 Email : sdbpl@vsnl.com
		Tempsens Instrument (I) Pvt Ltd	MR. V.P.RATHI/MR. HEMANT RATHI B-188A ROAD NO.5 , M.I.A UDAIPUR Phone- 09352420069 Pincode : 313003 Email : info@tempsens.com	Works-1->Mr. S.D Deval B-188A ROAD NO.5 ,M.I.A -UDAIPUR-RAJASTHAN INDIA Phone- 9352501530 FAX : 0294-3057750 Pincode : 313003 Email : deval@tempsens.com
6	TRANSMITTERS	ABB LIMITED	MR. RAJIV GOVIL 14, MATHURA ROAD, FARIDABAD Phone- 09971085678 Pincode : 121003 Email : vipin.swami@in.abb.com	
		Pune Techtrol Pvt. Ltd.	N.P.Khatan/Sudhakar Badiger S-18, MIDC Bhosari, Pune Phone- 9850560042 Pincode : 411 026 Email : ho@punetechtrol.com	

		V. AUTOMAT & INTRUMENTS (P) LTD.	Mr. R. K. BASSI/Mr. PRAVEEN KUMAR F-61, OKHLA INDL.AREA, PH-1 NEW DELHI Phone- 9810005826 Pincode : 110 020 Email : sales@vautomat.com	Works-1->Mr. BHAGWAN SINGH/ Mr. NANDAN SINGH F-61, OKHLA INDL.AREA,PHASE-I -NEW DELHI-DELHI INDIA Phone- 011-47627200 Extn. 3 FAX : 011- 26819440 Pincode : 110 020 Email : production@vautomat.com
		Moore Industries International Inc.	Leonard.W. Moore/ Matt Moren 16650 Schoenborn St. North Hills Phone- +1 818 830 5548 Pincode : 91343 Email : mmoren@miinet.com	Works-1->Matt Moren/Gina Cruz 16650 Schoenborn St., North Hills -CALIFORNIA- USA Phone- +1 818 894 7111, ext FAX : +1 818 830 5588 Pincode : 91343 Email : gcruz@miinet.com
		PANAM ENGINEERS	Mr. Santosh Shukla 203, Jaisingh Business,Parsiwada, Sahar road,Andheri(East), Mumbai, Phone- 9892179529, Pincode : 400099, Email : santosh@panamengineers.com,	Works-1->Mr. Santosh Shukla Others R-628,TTC Industrial Area, MIDC Rabale, -Navi Mumbai-MAHARASHTRA India Phone- 9821350761, FAX : 022-27695559, Pincode : 400701, Email : sales@panamengineers.com
		TOSHNIWAL INDUSTRIES PVT. LTD.,	Industrial Estate, Makhupura, Ajmer, Phone- 9352009000, Pincode : 305002, Email : info@tipl.com,	Works-1-> Khasra No.: 218-230& 235, Industrial Estate,Makhupura, -Ajmer-RAJASTHAN India Phone- 9887865856, FAX : 0145-2695174, Pincode : 305002, Email : rajeev.gupta@tipl.com
		Endress + Hauser (India) Pvt. Ltd.,	Mr. Prakash Vaghela 215-216, DLF Tower 'A', Jasola District Centre, New Delhi, Phone- 9717593001, Pincode : 110025, Email : prakash.vaghela@in.endress.com,	Works-1-> M-171 to 173, MIDC, Waluj, -Aurangabad-MAHARASHTRA India Phone- 9881000474, FAX : 0240-2555179, Pincode : 431136, Email : Narendra.Kulkarni@wetzer.endress.com
		YOKOGAWA INDIA LIMITED,	PLOT NO.96, ELECTRONICS CITY COMPLEX, HOSUR ROAD, BANGALORE, Phone- 080-41586000, Pincode : Email : uday.shankar@in.yokogawa.com,	Works-1-> PLOT NO.96, ELECTRONICS CITY COMPLEX, HOSUR ROAD, -BANGALORE-KARNATAKA INDIA Phone- 080-41586000, FAX : 080-28521442, Pincode : Email : uday.shankar@in.yokogawa.com
		SBEM PVT. LTD.	MR.N.K. BEDARKAR/MR. VISHWANATH KARANDIK 39, ELECTRONIC CO.OP. ESTATE, PUNE SATARA ROAD PUNE, Phone- 912041030100 Pincode : 411009 Email : newdelhi@sbem.co.in	Works-1->MR. MOHAN PADWAL 691/A/2,BIBWEWADI INDL ESTATE -PUNE-MAHARASHTRA INDIA Phone- 918600042374 FAX : 912024215670 Pincode : 411037 Email : wm@sbem.co.in
		Honeywell Automation India Limited	Mr. Ritwij Kulkarni 917, INTERNATIONAL TRADE TOWER, NEHRU PLACE, NEW DELHI Phone- 9890200584 Pincode : 110019 Email : rajesh.chaudhary@honeywell.com	Works-1->Mr.Kedar Tillu 53, 54, 56 & 57,Hadapsar Industrial Estate -PUNE-MAHARASHTRA INDIA Phone- 9665034625 FAX : 020 66039905 Pincode : 411013 Email : kedar.tillu@honeywell.com
		EMERSON PROCESS MANAGEMENT (INDIA) PVT.LTD.	Mr. Amit Paithankar/Vikram Raj Singh 206-210,BALARAMA BUILDING 2ND FLR. BANDRA EAST MUMBAI Phone- 9619121500 Pincode : 400051 Email : vikramraj.singh@emerson.com	Works-1->Kalpesh Chandan/Hrishikesh Aghor Plot No. A 145/4 TTC IND AREA,MIDC, PAWANE, -NAVI MUMBAI-MAHARASHTRA INDIA Phone- 9619688001 FAX : 022-66736000 Pincode : 400 705 Email : Kalpesh.chandan@emerson.com
		SMART INSTRUMENTS LTD, BRAZIL	Agents: Digital Electronic Ltd. 74/11 'C' Cross Road MIDC Andheri (East) MUMBAI Phone- 28208477 Pincode : 400093 Email : corp@delbby.rpgms.ems.vsnl.net.in	
		SIEMENS LIMITED	Dr. Armin Bruck/Sandeep Mathur 130, Pandurang Budhkar Marg Worli Mumbai Phone- 0124 383 7377 Pincode : 400018 Email : ankit.varshney@siemens.com	Works-1->Ankit Varshney Kalwa Works, Thane-Belapur Road, Thane, -MUMBAI-MAHARASHTRA INDIA Phone- FAX : Pincode : 400708 Email :
		NIVO CONTROLS PVT. LTD.	Mr. Praveen Toshniwal 104-115, Electronic Complex, Indore Phone- 0731-4081305 Pincode : 452010 Email : sales@nivocontrols.com	Works-1->Mr. Praveen Toshniwal 104-115, Electronic Complex, -Indore-MADHYA PRADESH India Phone- 0731-4081305 FAX : 0731-255075 Pincode : 452010 Email : sales@nivocontrols.com
7	TEMPERATURE SWITCH	SOR INC.	LARRY DEGARMO/Avdhesh Chandra, 14685 W. 105TH STREET LENEXA Phone- 09810905139, Pincode : 66215 Email : Ldegarmo@sorinc.com, avdhesh@sherman-india.com,	Works-1->LARRY DEGARMO/ ROY STUMBOUGH 14685 W. 105TH STREET, LENEXA -KANSAS- USA Phone- 913-888-0767 FAX : 913-888-0767 Pincode : 66215 Email : rstumbough@sorinc.com
		TOSHNIWAL BROTHERS PVT.LTD.	WORKS:TOSHNIWAL IND.PVT.LTD, INDUSTRIAL ESTATE MAKHUPURA, AJMER Phone- 441171 Pincode : 305002 Email : toshniwalprocess@gmail.com	
		DRESSER INDUSTRIES INC.	Mr. Nishit Patel/Mr. Anuj Verma Plot No.2306, Phase II, GIDC Chhatral Kalol Phone- 02764-233682 Pincode : 382729 Email : Nishit.patel@ashcroftindia.com	
		INDFOS (INDIA) LIMITED	MR.L.C.VENKATRANGAN/MR.B.KANNAN New No.17, II Floor, Adwave Towers, Dr.Sevalia Shivaji Salai, T.Nagar Chennai Phone- +91 44 24353407 Pincode : 600017 Email : delhi@indfos.com	
		SWITZER PROCESS INSTRUMENTS PVT. LTD.	Mr. V S Jayaprakash, No.127 & 128, SIDCO North Phase, Ambattur Estates CHENNAI Phone- 044-26252017/2018 Pincode : 600050 Email : marketing@switzerinstrument.com	Works-1->C S Shankar 127, Sidco North Phase, Ambattur Estates, -CHENNAI-TAMIL NADU INDIA Phone- 8754491904 FAX : 044-26248849 Pincode : 600050 Email : cservice@switzerinstrument.com
8	JUNCTION BOX	K.S.INSTRUMENTS PVT.LTD.	S Raghavan No. 72, 3rd Main, 1st Stage Industrial Suburb, Yeshwanthpur Bangalore Phone- 9880385770 Pincode : 560022 Email : sales1@ksinstruments.net	
		SUCHITRA INDUSTRIES	NO-2,OPP-27 AECS LAYOUT 2ND STG REJAMAHALVILAS EXTN 2ND STG BANGALORE Phone- Pincode : Email : suchitra.industriesblr@gmail.com	Works-1->B. Srinivas Suchitra Industries, Opp No 53, Muneshwara Black Devinagar, Lottagal hal -BANGALORE-KARNATAKA INDIA Phone- 080-23511247 FAX : Pincode : 560094 Email : suchitra_industries@yahoo.com
		Shrenik & Company,	Mr. Mitesh Shah/Mr. Pulin Shah 39 A/3 ,Panchratna Industrial Estate, Sarkhej-Bavla Road Ahmedabad Phone- 9825024921 Pincode : 382213 Email : sales@pustron.com, pulin@sumip.com	Works-1->Mr.Pulin Shah/ Mr. Kaloesh Parmar 39 A/3 ,Panchratna Industrial Est,Sarkhej-Bavla Road, Changodhar -Ahmedabad-GUJARAT INDIA Phone- 98250 80339 1 FAX : 079-26932424 Pincode : 382213 Email : sales@sumip.com
		FLEXPRO ELECTRICALS PVT. LTD.	Mr. Dineshbhai Zaveri C-1/ 27&37, GIDC, Kabilpore, Navsari Phone- 02637-265140,265003 Pincode : 396424 Email : flexpro@flexproltd.com	Works-1->Mr. Dineshbhai Zaveri CEO C-1/ 27&37, GIDC, Kabilpore, -Navsari-GUJARAT INDIA Phone- 02637-265140,265003 FAX : 02637-265308 Pincode : 396424 Email : flexpro@flexproltd.com
		AJMERA INDUSTRIAL & ENGINEERING WORKS	JIGNESH MAHENDRA AJMERA DENA BANK BLDG.,SHREE NAGESH INDL. ESTATE,STATION ROAD, MUMBAI Phone- 022 67973578 Pincode : 400 088 Email : ajmera@ajmera.net, jmajmera@yahoo.com	Works-1->JIGNESH MAHENDRA AJMERA DENA BANK BLDG., SHREE NAGESHINDL. ESTATE,STATION ROAD, -MUMBAI-MAHARASHTRA INDIA Phone- 022 67973578 FAX : Pincode : 400 088 Email : ajmera@ajmera.net

9	Cold Junction Compensation Box (CJCB)	CREATIVE INSTRUMENTS & CONTROLS	NO-17/1 , 1ST FLOOR , 11TH CROSS 1ST K BLOCK , RAJAJINAGAR, BANGALORE-560010 Phone- Pincode : Email : crinstruments@gmail.com	
10	INSTRUMENTS TUBE FITTINGS	VIKAS INDUSTRIAL PRODUCTS	S.R.SINGH/NAVEEN SINGH B - 2, SECTOR - 6, NOIDA Phone- +91-9810122070 Pincode : 201301 Email : naveensingh@vsnl.com	Works-1->S.R.SINGH/ NAVEEN SINGH B - 2, SECTOR - 6, -NOIDA-UTTAR PRADESH INDIA Phone- 0120-4352940 FAX : 0120-4352940 Pincode : 201301 Email : naveensingh@vsnl.com
		Fluid Controls Pvt. Ltd.	Sophie Y. Moochhala/Mayur Rajput J.V.PATEL, I.T.I CMPD, B.MADHUKAR MARG, ELPHINSTONE ROADSTN.(WR), MUMBAI Phone- (022) 43338000 Pincode : 400013 Email : sales@fluidcontrols.com	Works-1->Mr. Tansen Choudhari/Mr. Mahesh Darekar Shed No.8, Lonavla Indl.Co-op.Estate Ltd,Nagargaon, -Lonavla-MAHARASHTRA INDIA Phone- 9823951347 FAX : (02114) 271132 Pincode : 410 401 Email : factory@hyd-air.com
		PRECISION ENGINEERING INDUSTRIES	K. SITARAM/ K. SRINIVAS 7,SIDHAPURA INDUSTRIAL ESTATE S.V. ROAD,GOREGAON(W) MUMBAI Phone- 022 42631700 Pincode : 400 062 Email : peiks@vsnl.com	Works-1->ALEX BAPTIST/ K. SRINIVAS 7. SIDHAPURA INDUSTRIAL ESTATE,SV ROAD, GOREGAON(WEST) -MUMBAI-MAHARASHTRA INDIA Phone- 022-42631700 FAX : 022-40035259 Pincode : 400 062 Email : srinivas@precision-engg.com
		AURA INCORPORATED	NIRAJ SHARAN/SUJIT KUMAR W-167A, GREATER KAILASH-II NEW DELHI Phone- 9810182430 Pincode : 110048 Email : niraj@aurainc.com	
11	INSTRUMENTS PIPE FITTINGS	VIKAS INDUSTRIAL PRODUCTS	S.R.SINGH/NAVEEN SINGH B - 2, SECTOR - 6, NOIDA Phone- +91-9810122070 Pincode : 201301 Email : naveensingh@vsnl.com	Works-1->S.R.SINGH/ NAVEEN SINGH B - 2, SECTOR - 6, -NOIDA-UTTAR PRADESH INDIA Phone- 0120-4352940 FAX : 0120-4352940 Pincode : 201301 Email : naveensingh@vsnl.com
		AURA INCORPORATED	NIRAJ SHARAN/SUJIT KUMAR W-167A, GREATER KAILASH-II NEW DELHI Phone- 9810182430 Pincode : 110048 Email : niraj@aurainc.com	
		PRECISION ENGINEERING INDUSTRIES	K. SITARAM/ K. SRINIVAS 7,SIDHAPURA INDUSTRIAL ESTATE S.V. ROAD,GOREGAON(W) MUMBAI Phone- 022 42631700 Pincode : 400 062 Email : peiks@vsnl.com	Works-1->ALEX BAPTIST/ K. SRINIVAS 7. SIDHAPURA INDUSTRIAL ESTATE,SV ROAD, GOREGAON(WEST) -MUMBAI-MAHARASHTRA INDIA Phone- 022-42631700 FAX : 022-40035259 Pincode : 400 062 Email : srinivas@precision-engg.com
		Fluid Controls Pvt. Ltd.	Sophie Y. Moochhala/Mayur Rajput J.V.PATEL, I.T.I CMPD, B.MADHUKAR MARG, ELPHINSTONE ROADSTN.(WR), MUMBAI Phone- (022) 43338000 Pincode : 400013 Email : sales@fluidcontrols.com	Works-1->Mr. Tansen Choudhari/Mr. Mahesh Darekar Shed No.8, Lonavla Indl.Co-op.Estate Ltd,Nagargaon, -Lonavla-MAHARASHTRA INDIA Phone- 9823951347 FAX : (02114) 271132 Pincode : 410 401 Email : factory@hyd-air.com
12	INSTRUMENT FITTINGS	Perfect Instrumentation Control (India) Pvt. Ltd.	MD Hussain Shaikh/Shahanawaz Khan Gala No. 168, Loheki Chwal,216/ 218, Maulana Azad Rd. Nagpada Junction Mumbai Phone- 91-9324383121 Pincode : 400008 Email : shahanawaz.khan@perfectinstrumentation.com	Works-1->Shahanawaz Khan Vishweshwar Ind. Premises Co-op Soc. Ltd,F-18/19, Pradhikaran,Bhosadi MIDC -PUNE-MAHARASHTRA INDIA Phone- 020-30694134 FAX : 022-23013010 Pincode : 411026 Email : shahanawaz.khan@perfectinstrumentation.com
		Arya Crafts & Engineering Pvt. Ltd.	Mr.Sanjay Brahman/Mr.Shyam Vazirani 102, Vora Industrial Estate No.4 Navghar, Vasai Road (E) Dist.Thane, Mumbai Phone- +91-250-2392246 Pincode : 401210 Email : arya@aryaengg.com	
		Comfit & Valve Pvt. Ltd.	Mr. Jeetu Jain/Mr. Vinay Sosa Survey No. 23/1, Part 2, Ahmedabad-Mehsana Highway Laxmipura, Nandasan Phone- 02764-267036/37 Pincode : 382705 Email : marketing@com-fit.com	Works-1->Miss Sonal Pithadia/Miss Pavan Chavda Survey No. 23/1, Part 2, Ahmedabad-Mehsana Highway, Laxmipura -Nandasan-GUJARAT INDIA Phone- 8460848087 FAX : 2764-267036/37 Pincode : 382705 Email : domestic@com-fit.com
		HP VALVES & FITTINGS INDIA PVT. LTD.	S. Harichandran/P.S. Pandi B-11, Mugappair Industrial Estate, CHENNAI Phone- 044 26252537 Pincode : 600037 Email : sales@hpvalvesindia.com	Works-1->S. Harichandran/ P.S. Pandi B-11, Mugappair Industrial Estate, -CHENNAI-TAMIL NADU INDIA Phone- 044-25252537 FAX : 044-26252538 Pincode : 600037 Email : sales@hpvalvesindia.com
		PRECISION ENGINEERING INDUSTRIES	K. SITARAM/ K. SRINIVAS 7,SIDHAPURA INDUSTRIAL ESTATE S.V. ROAD,GOREGAON(W) MUMBAI Phone- 022 42631700 Pincode : 400 062 Email : peiks@vsnl.com	Works-1->ALEX BAPTIST/ K. SRINIVAS 7. SIDHAPURA INDUSTRIAL ESTATE,SV ROAD, GOREGAON(WEST) -MUMBAI-MAHARASHTRA INDIA Phone- 022-42631700 FAX : 022-40035259 Pincode : 400 062 Email : srinivas@precision-engg.com
		AURA INCORPORATED	NIRAJ SHARAN/SUJIT KUMAR W-167A, GREATER KAILASH-II NEW DELHI Phone- 9810182430 Pincode : 110048 Email : niraj@aurainc.com	
		FLUIDFIT ENGINEERS PVT. LTD.	Mr. Abbas Bhola Potia Building No. 2, Office No. 3,292, Bellasis Road,Mumbai Central (East) Mumbai Phone- 9920044113 Pincode : 400008 Email : ab@fluidfitengg.com	Works-1->Mr. Abbas Bhola Unit No. 16, Supreme Industrial Estate,Kaman Bhiwandi Road,Devdal, -Vasai East-MAHARASHTRA India Phone- 9920044113 FAX : 07303178243 Pincode : 401208 Email : ab@fluidfitengg.com
		VIKAS INDUSTRIAL PRODUCTS	S.R.SINGH/NAVEEN SINGH B - 2, SECTOR - 6, NOIDA Phone- +91-9810122070 Pincode : 201301 Email : naveensingh@vsnl.com	Works-1->S.R.SINGH/ NAVEEN SINGH B - 2, SECTOR - 6, -NOIDA-UTTAR PRADESH INDIA Phone- 0120-4352940 FAX : 0120-4352940 Pincode : 201301 Email : naveensingh@vsnl.com
		Fluid Controls Pvt. Ltd.	Sophie Y. Moochhala/Mayur Rajput J.V.PATEL, I.T.I CMPD, B.MADHUKAR MARG, ELPHINSTONE ROADSTN.(WR), MUMBAI Phone- (022) 43338000 Pincode : 400013 Email : sales@fluidcontrols.com	Works-1->Mr. Tansen Choudhari/Mr. Mahesh Darekar Shed No.8, Lonavla Indl.Co-op.Estate Ltd,Nagargaon, -Lonavla-MAHARASHTRA INDIA Phone- 9823951347 FAX : (02114) 271132 Pincode : 410 401 Email : factory@hyd-air.com
		PANAM ENGINEERS	Mr. Santosh Shukla 203, Jaisingh Business,Parsiwada, Sahar road,Andheri(East), Mumbai, Phone- 9892179529, Pincode : 400099, Email : santosh@panamengineers.com,	Works-1->Mr. Santosh Shukla Others R-628,TTC Industrial Area, MIDC Rabale, -Navi Mumbai-MAHARASHTRA India Phone- 9821350761, FAX : 022-27695559, Pincode : 400701, Email : sales@panamengineers.com

NOTE:

1. The above sub-vendor list is tentative & reference only. However Sub-Vendor List is subject to BHEL/end user approval without any commercial/ delivery implication.
2. New Sub-Vendor if proposed by Vendor during contract stage shall subject to BHEL/ end user approval without any commercial/ delivery implication.

KKS TAGGING PHILOSOPHY

KKS NUMBERING PHILOSOPHY

For identifying (tagging) an instrument / equipment in Power plant KKS numbering scheme is used. The purpose is to assign a unique number to every equipment in the power plant. For C&I equipment unique number are to be provided up to the signal level so that a unique number Input / Output exist in DCS for every signal.

Normally KKS number is a 10 digit alpha-numeric code and is typically split into the following:

X	X	X	A	A	Y	Y	B	B	B

First three digits indicate the Sub-System. The Code for the major system are given as per **Annexure-**1.

Fourth and Fifth digits are the **Numerical Keys at System Code Level** and used to distinguish between main systems having same Alpha Codes.

Sixth and Seventh digits are the **Equipment / Apparatus / Measuring Circuit Code**. The code of various Equipment / Apparatus / Measuring Circuit is shown in **Annexure-2**

Eight, Nine and tenth digits are the **Numerical Keys at Equipment / Apparatus / Measuring Circuit Code** and used to distinguish between various instruments in the same sub-group. Numerical keys at System / Equipment / Apparatus / Measuring Circuit is shown in **Annexure-3**.

ANNEXURE-1

List of System / Sub-System Codes used in Power Plant:

1) Mill Reject Handling System: EUA

ANNEXURE-2

Standard Equipment Codes:

AA	Valves including drives, also hand operated
AB	Seclusions, Lock, Gates, Doors
AC	Heat Exchanger
AE	Turning, Driving, Lifting equipment
AF	Continuous conveyors, Feeders
AG	Generator Units
AH	Heating and Cooling Units
AK	Pressing and Packaging equipment
AM	Mixer, Stirrer
AN	Blower, Air Pumps / Fans, Compressor Units
AP	Pump Units
AT	Purification, Drying, Filter
AV	Combustion Equipment e.g. grates

Standard Apparatus Codes:

BB	Vessels and Tank
BF	Foundation
BG	Boiler Heating Surfaces
BN	Injector, Ejector
BP	Flow and throughput limitation equipment (Orifice)
BQ	Holders, Carrying Equipment, Support
BR	Piping, Ducts, Chutes, Compensator
BS	Sound Absorber
BU	Insulations, Sheatings

Standard Measuring Circuits Codes:

CD	Density
CE	Electrical Quantities
CF	Flow, throughput
CG	Distance, Length, Position
CK	Time
CL	Level

CM	Humidity
CQ	Analysis (SWAS)
CS	Speed, Velocity, Frequency
CT	Temperature
CY	Vibration, Expansion

ANNEXURE-3

Numerical Keys

A) Numerical Keys at System Code Level

i) Use 10, 20, 30... To distinguish between main systems having same Alpha Codes. Examples:

a) Main Steam (Left) and Main Steam (Right)

b) BFP – A/B/C

c) ID Fan – A/B, FD Fan A/B, AH – A/B

ii) For branch off from main system path having code say 10, keep the same alpha code and use 11, 12, 13 etc. Similarly for other branch off from main system path having code say 20, keep the same alpha code and use 21, 22, 23 etc and shall carry on further in the same way.

iii) If the branch off from main system / sub system path is used for some other system, where different alpha codes can be applied, then in that case the said branch line will be designated by the alpha codes of the system to which it is providing the input.

B) Numerical keys at Equipment Code level:

There are three numerical keys available for each type of equipment code. Following has been agreed upon considering present practice, better flexibility and ease in sorting.

i) Valves and Dampers --- *Equipment Code – AA*

		N1	N2 N3
Motorised *(on/off duty)*	-	*0*	*01 to 50*
Motorised (inching duty)	-	*0*	*51 to 99*
Pneumatic (Control)	-	*1*	*01 to 50*
Motorised (thyrestor Control)	-	*1*	*51 to 99*
Sol. Operated	-	2	01 to 99
(Open / Close duty (Valves, NRVs, Gate)			
Hydraulic	-	3	01 to 99

NRV (Without actuation)	-	4	01 to 99
Manual	-	5	01 to 99
Manual	-	6	01 to 99
Relief & Safety Valves	-	7	01 to 99
Reserve	-	8	01 to 99
Reserve	-	9	01 to 99

ii) Field Instruments

Field Transmitters & Analog Signals	-	0	01 to 99
Field Switches & Binary Signals	-	1	00 to 99
PG Test Point	-	4	00 to 99
Gauges	-	5	00 to 99
Automatic Turbine Tester (ATT)-HWR	-	2	00 to 99

(Reserved for protection Signals used by Hardwar)

Example of Numerical Key Usage:

In line with the philosophy adopted for Valves / Dampers /instruments etc. pumps and fans in the main systems (having different system code) can be numbered as AP/N100 and as AP/N101, 102, ……. Where system code is same.

Annexure - 1

FORMAT FOR PROVENNESS CERTIFICATE

Sl.No.	Item Description	Plant No.1
5.00.00	**INSTRUMENTS (PRIMARY & SECONDARY)**	
(i)	Type of Instrument	
(ii)	Make / Model	
(iii)	Name of Power Station (Location & Address)	
(iv)	Unit Size (MW)	
(v)	Commissioning date	
	Whether above instruments have atleast one (1) year satisfactory operation in one (1) power station having unit rating of 200 MW or above.	Yes/No
(vi)	Client's certificate attached	Yes/No

Signature of authorized signatory.....

SECTION – III

DOCUMENTS TO BE SUBMITTED ALONG WITH THE BID

DRAWINGS/ DOCUMENTS TO BE SUBMITTED WITH THE BID

Bidder shall submit the following drawings/documents along with their bid:

a) Pre qualification requirement (PQR) documents

b) Signed and stamped copy of Compliance cum Confirmation Certificate

c) **Deviation schedule** with reference to specific clauses of the specification along with reason for such deviation in the "Cost of Withdrawal" format attached in the GCC.

d) Signed and stamped copy of Utility requirement sheet of Vol-III.

e) Un-priced copy of price format indicating quoted/ not quoted against each row / column.

f) Guaranteed Power Consumption Format (shall be submitted in open along with techno commercial offer only)

OFFER WILL BE CONSIDERED AS INCOMPLETE IN ABSENCE OF ANY OF ABOVE DOCUMENTS.

DOCUMENT OTHER THAN ABOVE, IF ANY, SUBMITTED WITH THE OFFER WILL NOT FORM PART OF CONTRACT AND ACCORDINGLY WILLNOT BE CONSIDERED FOR BID EVALUATION.

COMPLIANCE CUM CONFIRMATION CERTIFICATE

The bidder shall confirm compliance with following by signing/ stamping this compliance certificate (every sheet) and furnish same with the offer.

a. The scope of supply, technical details, construction features, design parameters etc. shall be as per technical specification & there are no exclusions other than those mentioned under “exclusion” and those resolved as per ‘Schedule of Deviations’, if applicable, with regard to same.

b. There are no other deviations w.r.t. specifications other than those furnished in the ‘Schedule of Deviations’. Any other deviation, stated or implied, taken elsewhere in the offer stands withdrawn unless specifically brought out in the ‘Schedule of Deviations’.

c. Bidder shall submit QP in the event of order based on the guidelines given in the specification & QP enclosed therein. QP will be subject to BHEL/ CUSTOMER approval & customer hold points for inspection/ testing shall be marked in the QP at the contract stage. Inspection/ testing shall be witnessed as per same apart from review of various test certificates/ Inspection records etc. This shall be within the contracted price with no extra implications to BHEL after award of the contract.

d. All drawings/ data-sheets/ calculations etc. submitted along with the offer shall be considered for reference only, same shall be subject to BHEL/ CUSTOMER approval in the event of order.

e. The offered materials shall be either equivalent or superior to those specified in the specification & shall meet the specified/ intended duty requirements. In case the material specified in the specifications is not compatible for intended duty requirements then same shall be resolved by the bidder with BHEL during the pre - bid discussions, otherwise BHEL/ Customer’s decision shall be binding on the bidder whenever the deficiency is pointed out.

   For components where materials are not specified, same shall be suitable for intended duty, all materials shall be subject to approval in the event of order.

f. The commissioning spares shall be supplied on ‘As Required Basis’ & prices for same included in the base price itself.

g. All sub vendors shall be subject to BHEL/ CUSTOMER approval in the event of order.

h. Guarantee for plant /equipment shall be as per relevant clause of GCC /SCC /Other Commercial Terms & Conditions.

i. In the event of order, all the material required for completing the job at site shall be supplied by the bidder within the ordered price even if the same are additional to approved billing break up, approved drawing or approved Bill of quantities. This clause will apply in case during site commissioning additional requirements emerges due to customer and/ or consultant’s comments. No extra claims shall be put on this account.

j. Schedule of drawings submissions, comment incorporations & approval shall be as stipulated in the specifications. The successful bidder shall depute his design personnel to BHEL’s/ Customer’s/ Consultant’s office for across the table resolution of issues and to get documents approved in the stipulated time.

k. As built drawings shall be submitted as and when required during the project execution.

l. The bidder has not tempered with this compliance cum confirmation certificate and if at any stage any tempering in the signed copy of this document is noticed then same shall be treated as breach of contract and suitable actions shall be taken against the bidder.

m. Regarding commercial documents / deviations, BHEL clarified that commercial documents /deviations shall not been considered during technical evaluation. However if any issue in the commercial documents / deviation related to technical requirements needs to be highlighted and resolve in technical evaluation only.
No aspect of commercial issues needs to be highlighted / resolved in technical evaluation and their offer is strictly in compliance with technical specification. BHEL also clarified to the bidder any technical deviations (e.g. related to MDL, required documentation etc. for completion of the Project) raised by them in commercial deviation either explicit or implicit shall be considered null and void even if agreed by BHEL during commercial evaluation stage.
Bidder agreed to confirm and compliance with technical specification and subsequent clarification on bids during pre- award discussion.

PRE-BID CLARIFICATION SCHEDULE

S. No.	Section/Clause /Page No.	Statement of the referred clause	Clarification Required

The bidder hereby certifies that above mentioned are the only clarifications required on the technical specification for the subject package.

SIGNATURE: _____

NAME: _____

DESIGNATION: _____

COMPANY: _____

DATE: _____

COMPANY SEAL

UTILITY REQUIREMENT

S. No.	Utility	Requirement	Tapping point location
1.	Instrument air	Pressure-5-7 bar Flow- 1 m^3 /min	3-6 m at first column of mill bay
2.	Service water	Pressure-2.5-3 bar Flow- 3-4 m^3/ hour	3-6 m at first column of mill bay

The bidder have to signed and stamped copy of this sheet along with bid.

DEVIATION SHEET (COST OF WITHDRAWAL)

PROJECT:-3 X 800 MW PATRATU STP PHAE-I

PACKAGE:- MILL REJECT SYSTEM (CONVEYOR TYPE)

TENDER ENQUIRY REFERENCE:-

SPECIFICATION NO PE-TS-434-160-A101 **VOLUME III**

NAME OF VENDOR:-

SL NO	VOULME/ SECTION	PAGE NO.	CLAUSE NO.	TECHNICAL SPECIFICATION / TENDER DOCUMENT	COMPLETE DESCRIPTION OF DEVIATION	COST OF WITHDRAWL OF DEVIATION	REFERENCE OF PRICE SCHEDULE ON WHICH COST OF WITHDRAWL OF DEVIATION IS APPLICABLE	NATURE OF COST OF WITHDRAWL OF DEVIATION (POSITIVE/ NEGATIVE)	REASON FOR QUOTING DEVIATION
TECHNICAL DEVIATIONS									
COMMERCIAL DEVIATIONS									

PARTICULARS OF BIDDERS/ AUTHORISED REPRESENTATIVE

NAME	**DESIGNATIONS**	**SIGN & DATE**	

NOTES:

1. For self manufactured items of bidder, cost of withdrawl of deviation will be applicable on the basic price (i.e. excluding taxes, duties & freight) only.
2. For directly dispatchable items, cost of withdrawl of deviation will be applicable on the basic price including taxes, duties & freight.
3. All the bidders have to list out all their Technical & Commercial Deviations (if any) in detail in the above format.
4. Any deviation not mentioned above and shown separately or found hidden in offer, will not be taken cognizance of.
5. Bidder shall submit duly filled unpriced copy of above format indicating "quoted" in "cost of withdrawl of deviation" column of the schedule above along with their Techno-commercial offer, wherever applicable.
6. Bidder shall furnish price copy of above format along with price bid.
7. The final decision of acceptance/ rejection of the deviations quoted by the bidder shall be at discretion of the Purchaser.
8. Bidders to note that any deviation (technical/commercial) not listed in above and asked after Part-I opening shall not be considered.

9. For deviations w.r.t. Payment terms, Liquidated damages, Firm prices and submission of E1/ E2 forms before claiming 10% payment, if a bidder chooses not to give any cost of withdrawl of deviation loading as per Annexure-VIII of GCC, Rev-06 will apply. For any other deviation mentioned in un-priced copy of this format submitted with Part-I bid but not mentioned in priced copy of
10. Any deviation mentioned in priced copy of this format, but not mentioned in the un-priced copy, shall not be accepted.
11. All techno-commercial terms and conditions of NIT shall be deemed to have been accepted by the bidder, other than those listed in unpriced copy of this format.
12. Cost of withdrawl is to be given seperately for each deviation. In no event bidder should club cost of withdrawl of more than one deviation else cost of withdrawl of such deviations which have been clubbed together shall be considered as NIL.
13. In case nature of cost of withdrawl (positive/negative) is not specified it shall be assumed as positive.
14. In case of descrepancy in the nature of impact (positive/ negative), positive will be considered for evaluation and negative for ordering.