FIRST ANGLE PROJECTION

(ALL DIMENSIONS ARE IN mm)

DRG. NO. 0-96660-3-0057

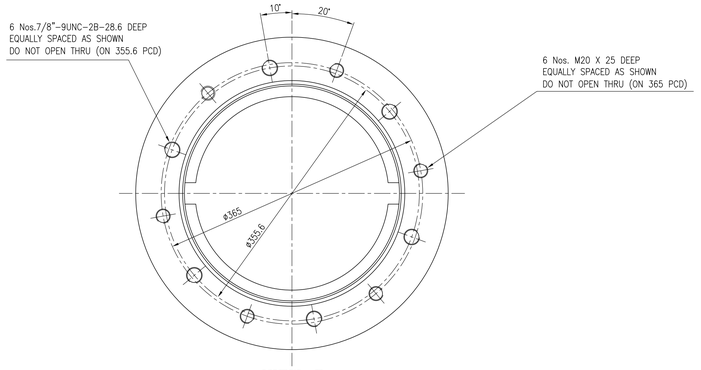

VIEW–P
SCALE 1:3

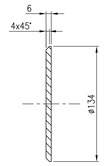

ITEM No.2
SCALE 1:2.5

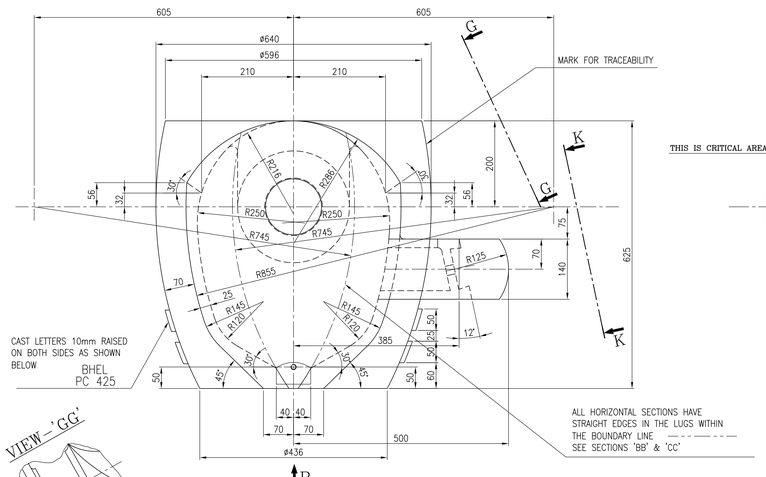

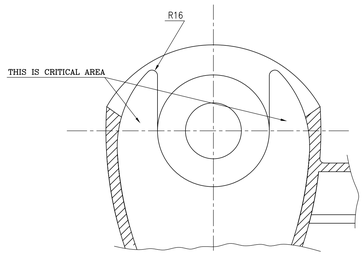

SECTION–'EE'

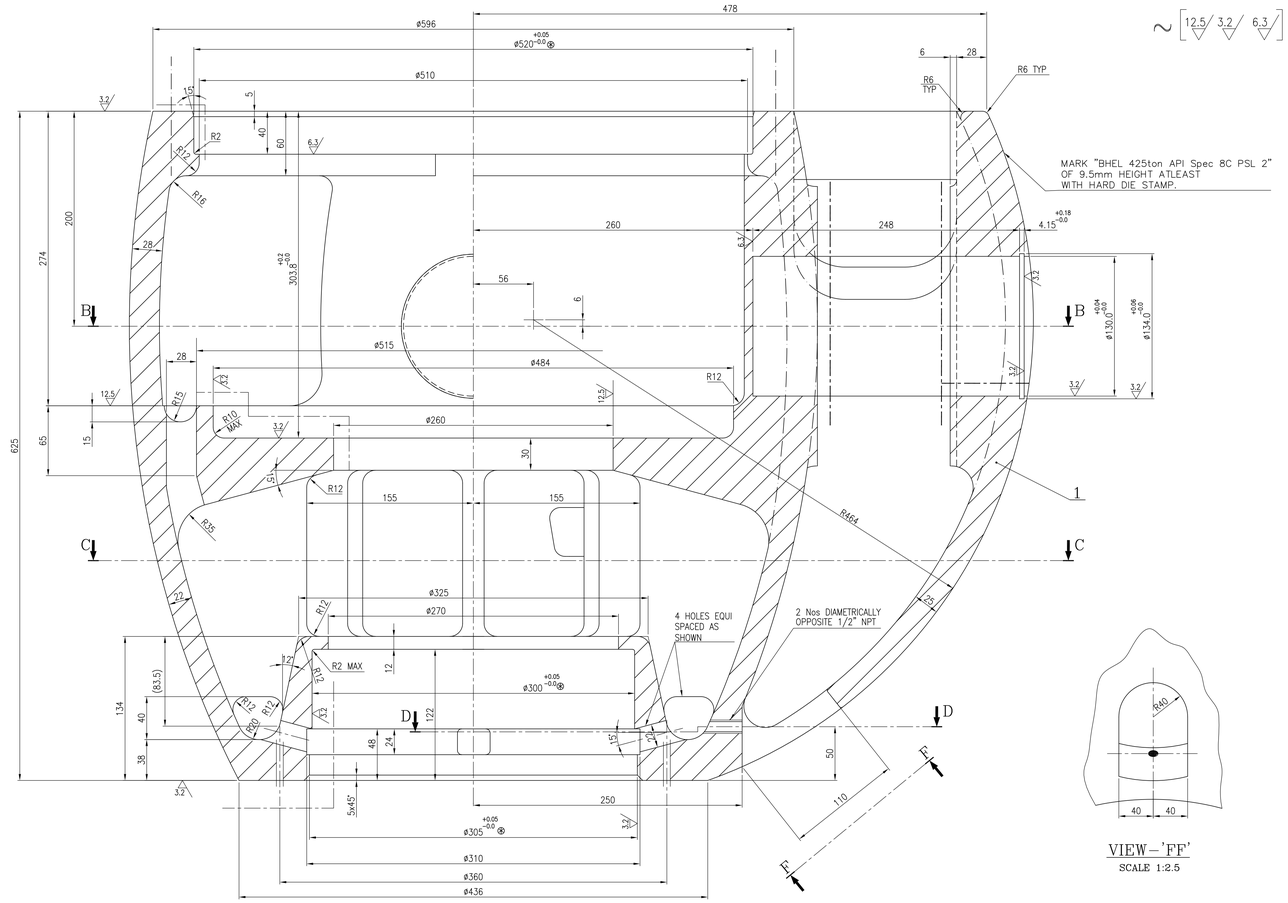

SECTION AA
SCALE 1:2

VIEW–'FF'
SCALE 1:2.5

VIEW–'GG'

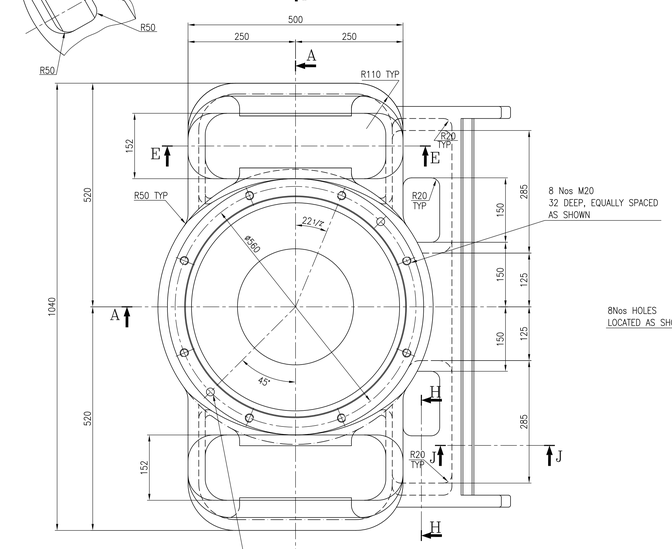

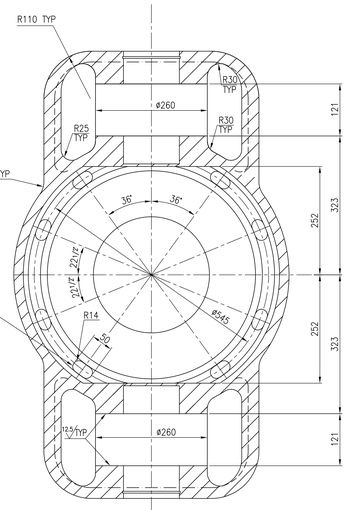

SECTION–'BB'

JOIN SECTIONS WITH A SMOOTH
CIRCULAR CUREVE SO AS TO PRODUCE
A CORNER SECTION NEITHER LESSER THAN
THE THINNER NOT GREATER THAN THE
THICKER OF THE TWO SECTIONS–TYPICAL

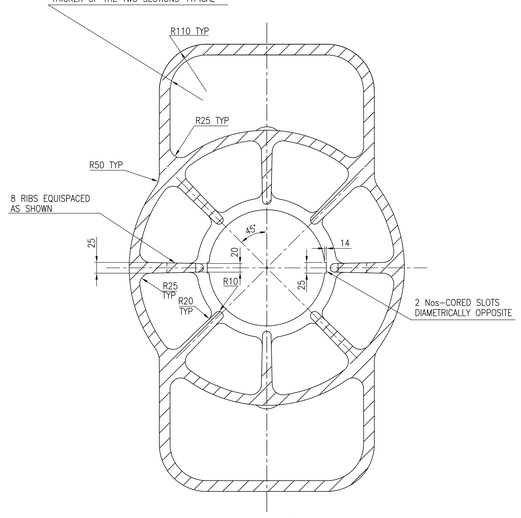

SECTION–'CC'

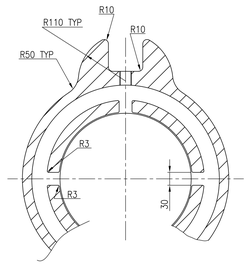

SECTION–'DD'

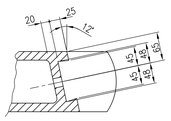

SECTION–'JJ'

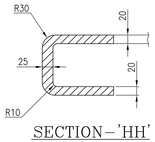

SECTION–'HH'

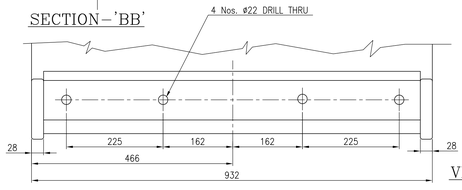

VIEW–'KK'

THIS ITEM IS 'CRITICAL' TO DESIGN

FOR CASTING MANUFACTURER

THIS IS A FINISH MACHINED DRAWING

1. NO HOT TEARS & CRACK INSERTS ARE ACCEPTABLE.
2. CASTING SHALL BE RADIOGRAPHED AT CRITICAL AREAS SHOWN IN 39666039967 SHEET 2 OF 2 IN ACCORDANCE WITH "ASTM-E446" LATEST EDITION AND SHALL MEET THE SEVERITY 2.
3. REST OF CASTING TO BE RADIOGRAPHED IN ACCORDANCE WITH "ASTM-E446" LATEST EDITION AND SHALL MEET THE SEVERITY 3.
4. UT SHALL BE CONDUCTED IN LINE WITH SPECIFICATION OE51394 FOR PSL-2

MANDATORY REQUIREMENTS:

** 1. SULPHUR AND PHOSPHORUS CONTENT SHALL NOT BE MORE THAN 0.025%

TECHNICAL REQUIREMENTS:–

1. UNLESS OTHERWISE SPECIFIED ALL RADII TO BE 12mm CAST FILLET
2. ALL PITCH CIRCLES TO BE CONCENTRIC
3. BORES MARKED ⊛ THUS TO BE CONCENTRIC
4. THROUGHLY CLEAN ALL INSIDE ROUGH SURFACES & PAINT WITH OIL PROOF PAINT AS PER DRG NO:3-65-0021
5. CASTING IS TO BE SUPPLIED IN ROUGH MACHINED CONDITION IF ORDERED ON MATERIAL CODE: OE9211121256
6. ATTEST MATERIAL
7. FOR WELDING USE WPS No.WE006
8. HYDROSTATIC TEST SHALL BE CARRIED OUT AT 80 PSI OR 5.6kgf/cm² AS PER OE71001 AT BHEL
9. CARRY OUT THE MPI TEST AS PER THE BHEL STANDARD HYQC:NDE:035 AFTER FINAL MACHINING.

FULLY MACHINED CODE: OE9712930025.

ITEM NO	DESCRIPTION	DRAWING NO.	VAR. NO.	RAW MATERIAL SIZE OR CASTING DRG.NO. OR FORGING DRG.NO.	MATERIAL CODE	NET WT.	GROSS WT.
2	BAIL PIN BLIND				AA1011808030	0.7	EST
					AA10108	2	
1	HOUSING				OE9211121256	980	EST
					OE51394	1	
	MATERIAL SPECN.				QUANTITY		

THE FOLLOWING CONDITIONS APPLY EXCEPT OTHERWISE STATED...

1. REF.TO HY0230261 FOR UNS TOLERANCES.
2. CHAMFER M/CD SHARP EDGES 1.2 TO 1.0 AT 45°.
3. INTERNAL M/CD CORNER RADII 1 TO 0.7.
4. THE SURFACE PROBEVER WHEREVER NOT SHOWN SHALL BE TAKEN FROM THE SURFACE ROUGHNESS SHOWN OUT SIDE BACK SLASHES GIVEN AT THE TOP MOST RIGHT CORNER OF THE DRG.

TYPE OF PRODUCT OR NAME OF CUSTOMER/PROJECT: PC 425 SWIVEL

भारत हेवी इलेक्ट्रिकल्स लिमिटेड हैदराबाद
BHARAT HEAVY ELECTRICALS LTD. HYDERABAD

	NAME	SIGN.	DATE	NO.OF VAR.
DRN.	PCC/BSRC		20.11.04	–NA–
CHD.	S.C.JHA		22.11.04	
APPD.	M.R.K		25.11.04	

DEPT.	SCALE	WEIGHT (KG)	REF. TO ASSY DRG.	ITEM NO.	NO.OF ITEMS
OFE. ENGG.	1:5	982 EST.	0-96660-3-0056	–NA–	–NA–
CODE 4430					

TITLE: HOUSING

DRAWING NO. 0-96660-3-0057 REV. 12

SHEET NO. 01 NO OF SHEETS 01

REV.	DATE	ALTERED	CHECKED	APPD.	ZONE
12	15.6.16	J R	S C J	S C J	ITEM CRITICALITY ADDED; MARKING DETAILS ADDED; NOTES NO 5 & 6 DELETED AND REORDERED
11	11.4.16	J R	S C J	S C J	MATERIAL SPEC MODIFIED; STD. E71 IS REPLACED WITH E446
10	02.01.12				BAIL PIN BORE WAS OPEN 'THRU' IN CASTINGED FROM THE CASTING.
09	05.03.2009	SAROJ	S C JHA	MRK	KEROSENE TEST REMOVED FROM THE CASTING.
08	12.10.2006	MKC	SCJ	MRK	DRWG REVIEWED
07	20.11.04	PCC/BSRC	S.C.JHA	M.R.K	DRAWING IS REDRAWN ON ACAD INCORPORATING THE ALL PREVIOUS REVISIONS

INVENTORY NO. 0-65-0172 | SIGN. AND DATE | REF. DRG. NO. 0650172.DWG | COMPUTER FILE NAME :

THE INFORMATION ON THIS DOCUMENT IS THE PROPERTY OF BHARAT HEAVY ELECTRICALS LIMITED. IT MUST NOT BE USED DIRECTLY OR INDIRECTLY IN ANY WAY DETRIMENTAL TO THE INTREST OF THE COMPANY

This Drawing is printed from Engineering Digital Archive System (EDAS).
Therefore signatures are not essentially required.