FIRST ANGLE PROJECTION

(ALL DIMENSIONS ARE IN mm)

DRG. No. 1-96633-3-0016

~ ALL OVER EXCEPT NOTED.

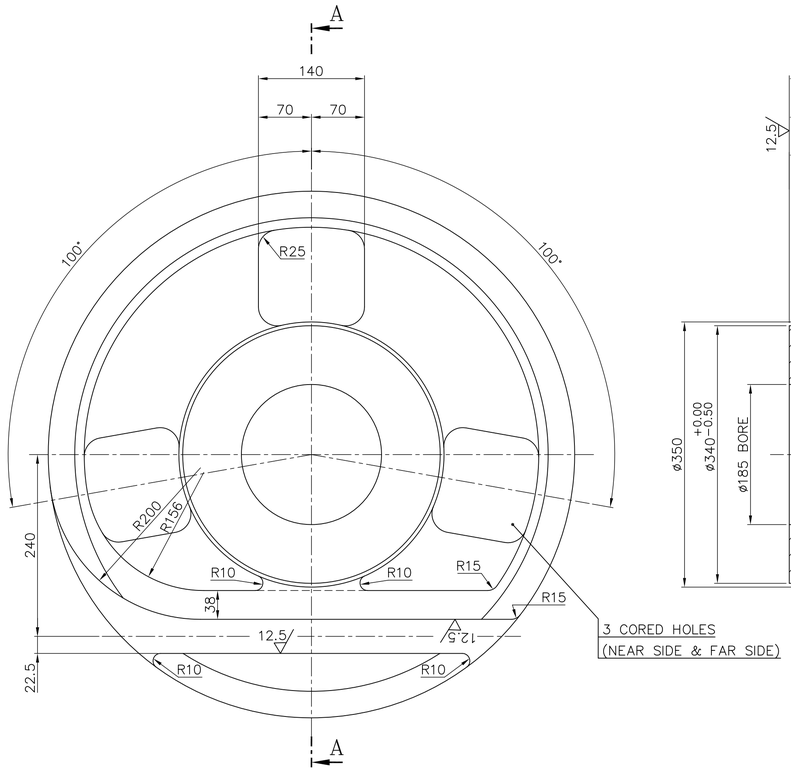

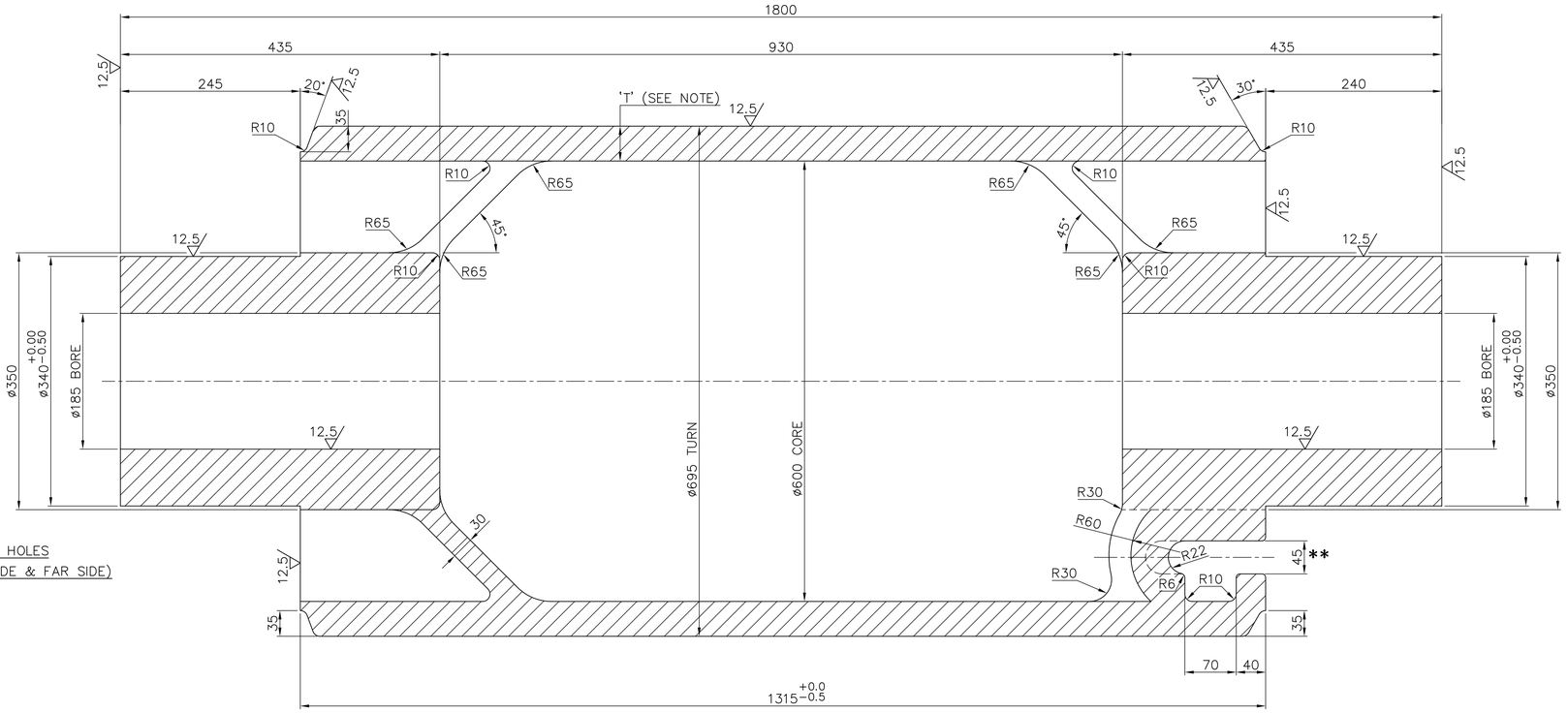

SECTION "A–A"

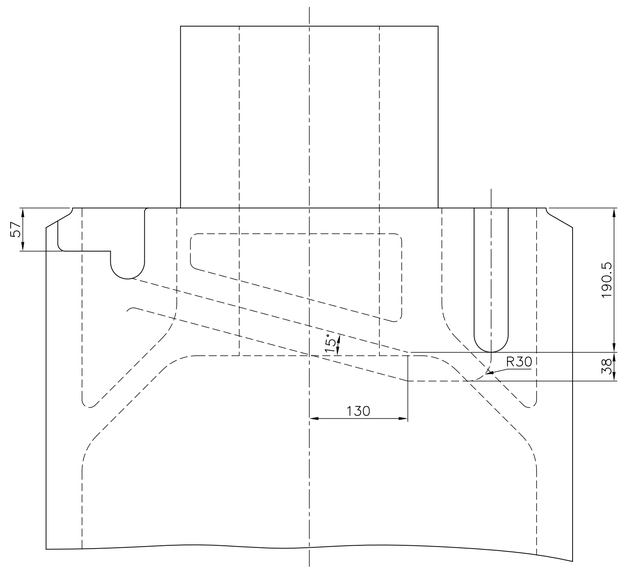

FULLY M/C CODE: OE9717401012

MATERIAL IS TO BE ATTESTED

NOTE: –

1. BREAK SHARP EDGES.
2. THE ø600 CORE TO BE CONCENTRIC WITH DRUM AXIS.
3. CORE SHIFT SHOULD NOT RESULT IN THICKNESS VARIATION OF ±2MM MAX. AFTER MACHINING.
4. CHECK THICKNESS 'T' AS INDICATED IN NOTE BY ULTRASONICALLY.
5. CASTING IS TO BE ULTRASONICALLY INSPECTED AS PER CORPORATE STANDARD NO. AA0850104; ACCEPTANCE LEVEL II.
6. THIS IS A DRAWING FOR ROUGH MACHINED CASTING. CASTING SHALL BE SUPPLIED WITHOUT ADDING ANY FURTHER ALLOWANCE AND SHALL BE STRICTLY TO THE DRAWING SHAPE AND DIMENSIONS. TOLERANCE FOR ALL MACHINED DIMENSIONS ±0.5MM UNLESS OTHERWISE SPECIFIED.
7. ** DIMENSION NOT TO BE DEVIATED

PART NO 33003

ITEM NO	DESCRIPTION	DRAWING NO.	VAR. NO.	RAW MATERIAL SIZE OR CASTING DRG.NO. OR FORGING DRG.NO.	MATERIAL CODE / MATERIAL SPECN.	NET WT.	GROSS WT. / QUANTITY

THE FOLLOWING CONDITIONS APPLY EXCEPT OTHERWISE SPECIFIED.

1. REF.TO HY0230261 FOR UNSPECIFIED TOLERANCES.
2. CHAMFER M/CD SHARP EDGES 1.2 TO 1.0 AT 45°.
3. INTERNAL M/CD CORNER RADII 1 TO 0.7.
4. THE SURFACE ROUGHNESS WHEREVER NOT SHOWN SHALL BE TAKEN FROM THE SURFACE ROUGHNESS SHOWN OUT SIDE BACK SLASHES GIVEN AT THE TOP MOST RIGHT CORNER OF THE DRG.

TYPE OF PRODUCT OR NAME OF CUSTOMER/PROJECT: E1400 DRAW WORKS

भारत हैवी इलेक्ट्रिकल्स लिमिटेड हैदराबाद
BHARAT HEAVY ELECTRICALS LTD. HYDERABAD

	NAME	SIGN.	DATE	No. OF VAR.
DRN.	J.C.S/BSRC		18.7.78	N.A
CHD.	S.C.JHA			
APPD.	M.R.K			

DEPT.	EDC–OFE	SCALE	WEIGHT (KG)	REF. TO ASSY. DRG.	ITEM No.	No. OF ITEMS
CODE	4430	1:4	1576	0–96633–3–0016	2/4	N.A

TITLE: DRUM SPOOL

DRAWING No. 1–96633–3–0016 REV. 07

SHEET No. 01 No. OF SHEETS 01

REV.	DATE	ALTERED	CHECKED	APPD.
07	07.04.18	J R	S.C.JHA	
05	25.07.05	J.C.S	S.C.JHA	M.R.K

07: MACHINING SYMBOL ADDED IN 45 MM SLOT AREA NOTE 7 ADDED

05: DRAWING REDRAWN IN AUTOCAD INCORPORATING PREVIOUS REVISIONS.

THE INFORMATION ON THIS DOCUMENT IS THE PROPERTY OF BHARAT HEAVY ELECTRICALS LIMITED. IT MUST NOT BE USED DIRECTLY OR INDIRECTLY IN ANY WAY DETRIMENTAL TO THE INTEREST OF THE COMPANY

COMPUTER FILE NAME : | SIGN. AND DATE | REF. DRG. No. | INVENTOR No. 1-65-0120

This Drawing is printed from Engineering Digital Archive System (EDAS). Therefore signatures are not essential.