- measurement of insulation resistance
- measurement of winding resistance
- open circuit characteristic test and voltage balance, phase sequence check
- segregation of mechanical loss and core loss
- segregation of stray load loss
- efficiency calculation
- unbalanced load test for negative-phase sequence and zero sequence reactance
- shaft voltage measurement
- oscillographing of verified voltage wave form and harmonic analysis
- measurement of vibration
- polarization index
- tan delta measurement of complete winding
- bearing insulation resistance.

c) Type tests on generator (as far as type test certificates are not available)

- Sudden short circuit test at reduced voltage (30%, 50% and 70% of rated voltage), extrapolated to 100% voltage
- Equivalent heat run test consisting of:
  - windage and friction heat run, open circuit heat run at 105% rated voltage, short-circuit heat run at rated line current, open-circuit heat run at rated line voltage
  - measurement of open-circuit direct-axis transient time constant
  - noise measurement
  - moment of inertia
- Measurement of excitation response time*)
  - overall characteristic coupled with generator and AVQC cubicle at no load*)

*) applicable to assembled unit consisting of generator, exciter and voltage regulator, may be carried out on site

Type tests shall be carried out if type test certificates (Not older than 5 years as on date of bid opening) certified by an independent test authority are not available.

Sudden short circuit test shall be carried out in line with IEC at voltage level to be finalized during detailed engineering.

d) Routine tests on generator exciter

- Resistance of windings
- Insulation resistance
- High voltage tests
- Short-circuit characteristic
- No-load characteristic.

Bangladesh-India Friendship Power Company (Pvt) Ltd. BIFPCL

Motors
IEC 60034, ISO 1680, ISO 10816

- Type tests (each motor type) as far as type test certificates are not available
  - measurement of starting (locked rotor) current and torque
  - power factor and efficiency measurement
  - heat run test
  - noise measurement
  - temperature rise measurement
- Routine tests (each motor)
  - measurement of winding resistances
  - measurement of shaft current
  - no-load and current measurement
  - no-load short circuit measurement
  - open circuit secondary induced voltage test at stand still (wound rotor)
  - dielectric test (high voltage test)
  - measurement of insulation resistance
  - overspeed tests (120% for 2 minutes)
  - check of motor vibrations
  - oscillographic measurement of starting current.

Emergency diesel sets
All relevant routine and type tests according to:

ISO	3046	Reciprocating internal combustion engines - Performance
ISO	8528	Generating sets with reciprocrating internal combustion engines

a) Type tests
The diesel generator unit (DGU) and all auxiliary equipment shall be fully type tested. These tests shall include all type tests as defined in the relevant latest IEC and ISO recommendation (as a minimum requirement).

Evidence shall be given that the DGU together with the auxiliary equipment to be provided, under these specifications, have successfully passed all type tests of design, service frequency, impulse, insulation level, dynamic operating range, and electrical and mechanical endurance performance, as appropriate and as specified.

However, if deemed necessary, the Employer shall decide if additional tests are required to be performed by the Tenderer/Contractor.

The Tenderer/Contractor shall supply certified copies of type test certificates covering the proposed DGU of similar capacity or higher, operating range, data features, design and construction.

Bangladesh-India Friendship Power Company (Pvt) Ltd. BIFPCL

b) Sample tests

Sample Tests shall be performed, comprising as a minimum the following tests:

- Visual checks and measurements of dimensions
- Functional tests.

c) Routine tests

The Tenderer/ Contractor is required to carry out routine tests on each assembled and finished diesel generator unit and its relevant auxiliary equipment to demonstrate the integrity of the system.

Routine test certificates shall be submitted for the Employer's review and approval before shipment of the DGU.

The DGU shall pass all the routine tests as laid down in the relevant latest revisions of IEC & ISO Standards. In addition, the visual Inspection, which shall determine conformity of the DGU & the relevant equipment with the requirement, shall be part of the routine tests.

The acceptance test for the diesel engine at the Manufacturer's workshop test bed shall include the measurements, calculations and functional checks stated in ISO 3046-1 (E).

A test report in English shall be issued according to ISO 3046-1 (E) giving evidence of the following data:

- Engine model, order No., rated output, operating speed, number of cylinders, bore, stroke, compression ratio, cylinder displacement, no. of strokes, date of test, the Employer's name, inspector's name, ambient air temperature, relative humidity, barometric pressure, fuel specific gravity, fuel net calorific value, setting data of injection pump, firing sequence, valve timings, type of fuel oil filter, type of lube oil filter, type of turbocharger and inter-cooler, type of governor, type of injectors.

The Tenderer/Contractor shall submit together with the test report a certificate showing the emission levels of the exhaust gases: NOx, CO and PM (particulate matter).

The diesel engine shall be proven to be capable of operating in steady state condition on all above mentioned loads. If the diesel engine fails to operate in steady state condition on one or more loads, this engine type shall be not accepted for the scope of the diesel generator units.

d) Special tests

The diesel engine shall be at least tested in total for one hour at the following loads:

• Warm-up of the diesel engine	as required
• 25 % load operation	10 minutes
• 50 % load operation	10 minutes

Bangladesh-India Friendship Power Company (Pvt) Ltd. BIFPCL

- 75 % load operation 10 minutes
- Full load operation 20 minutes
- 110 % load operation 20 minutes
- Cool down of the diesel engine.

During the test run, temperatures, pressures and fuel consumption shall be measured and recorded.

The diesel engine shall be proven to be capable for operation in steady state condition on all above mentioned loads. If the diesel engine fails to operate in steady state condition on one or more loads, this engine type shall not be accepted.

Low voltage switchgear

The following standards and regulations or equivalent shall be used:

IEC 60947	Low-voltage switchgear and control gear
IEC 61439	Low-voltage switchgear and control gear assemblies
IEC 60529	Degrees of protection provided by enclosures (IP Code)
IEC 60898	Specifications for circuit-breakers
IEC 60079	Electrical apparatus for potentially explosive atmospheres
IEC 60947	Regulations for low-voltage switchgear

The "Design Verification" of all low voltage switchgears/ motor control centers shall be carried out by following methods:

- "Testing" for the Pos. No. 1., 2., 3., 4., 5., 9., 10., 11., 12. and 13 of IEC 61439-1/Annex D, Table D.1
- "Assessment" for the Pos. No. 6., 7. and 8 of IEC 61439-1/Annex D, Table D.1

In addition to the above tests for which certificates shall be submitted, at least the following tests shall be performed in the manufacturer's workshop on the individual apparatus and on the complete installation, respectively, all in accordance with IEC Standards:

- Visual inspection
- Power frequency HV tests at main circuit
- Dielectric tests of the auxiliary and control circuits
- Functional test of the control circuits
- Check of the operational sequence.

Bangladesh-India Friendship Power Company (Pvt) Ltd. BIFPCL

Capacitors

IEC	60831	Shunt power capacitors
IEC	60871	Shunt capacitors for A.C. power systems
IEC	60931	Shunt power capacitors
IEC	60143	Series capacitors for power systems
IEC	60358	Coupling capacitors and capacitor dividers
IEC	60384	Fixed capacitors for use in electronic equipment

Batteries, charging equipment inverters and DC/DC converters

IEC	60086	Primary batteries
IEC	60119	Recommendations for polycrystalline semiconductor rectifier stacks and equipment
IEC	60146	Semiconductor converters
IEC	60896	Stationary lead-acid batteries
IEC	61204	Low voltage power supply devices DC output

Chargers and batteries shall be tested together in the factory. Testing of chargers and batteries together at site will also be accepted. All factory tests shall be repeated at site.

Chargers

- Visual inspection (to be repeated on site)
- Functional tests (to be repeated on site)
- Heat run (type test)
- Output voltage stability measured for 25% load steps
- Ripple voltage measurement without connected battery
- Ripple measurement (voltage and current) with connected battery (at site will also be accepted.
- Insulation test (to be repeated on site).

Batteries

- Visual inspection (to be repeated on site)
- Insulation test (to be repeated on site)
- Charge test and discharge tests

Fuse Box

- Visual inspection (to be repeated on site)
- Functional tests (on site)
- Insulation test (on site)

Inverters and DC/DC converters

- Visual inspection (to be repeated on site)
- Functional tests (to be repeated on site)
- Heat run (type test)
- Insulation test (to be repeated on site).

Bangladesh-India Friendship Power Company (Pvt) Ltd. BIFPCL

Lamps and accessories

IEC	60081	Double-capped fluorescent lamps
IEC	61347	Lamp control gear
IEC	60921	Ballasts for tubular fluorescent lamps
IEC	60155	Glow starters for fluorescent lamps
IEC	60598	Luminaries
IEC	60188	High-pressure mercury vapor lamps
IEC	60400	Lampholders and starter holders for tubular fluorescent lamps
IEC	60901	Single-capped fluorescent lamps
IEC	60662	High pressure sodium vapor lamps
IEC	60192	Low pressure sodium vapor lamps
IEC	60923	Auxiliaries for lamps
IEC	61347	Part 2-13: lamp control gear for LED Modules
IEC	62031	LED modules for general lighting - Safety specifications
IEC	62560	Self-ballasted LED-lamps for general lighting services by voltage > 50 V - Safety specifications
IEC	62612	Self-ballasted LED-lamps for general lighting services by voltage > 50 V - Perforce requirements
IEC	62471	Photobiological safety
IEC	62384	DC or AC supplied electronic control gear for LED modules - Perforce requirements
IEC	60838	Part 2-2: miscellaneous lampholders - Connectors for LED-modules
IEC/PAS	62717	LED Modules for general lighting - Performance requirements
IEC/PAS	62722	Luminares Performance

HV-, MV- and LV-cables

All relevant routine and type tests according to:

IEC	60060	High voltage test techniques
IEC	60071	Insulation co-ordination
IEC	60230	Impulse tests on cables and their accessories
IEC	60811	Common test methods for insulating and sheathing materials of electric cables
IEC	60840	Power cables with extruded insulation and their accessories for rated voltages above 30 kV up 150 kV
IEC	62067	Power cables with extruded insulation and their accessories for rated voltages above 150 kV up 500 kV
IEC	60502	Power cables with extruded insulation and their accessories for rated voltages from 1 kV up to 30 kV

Bangladesh-India Friendship Power Company (Pvt) Ltd. BIFPCL

a) LV-cables

LV cables shall be workshop tested as per IEC 60502-1 with the following tests as a minimum:

Type tests:

- electrical type tests acc. to: IEC 60502 - 1 Clause 17
- non electrical type tests acc. to: IEC 60502 - 2 Clause 18.

Also following additional type tests shall be carried by the Contractor at their own cost prior to the first shipment of all offered cable if no type test certificates of identical cables are available:

- Fire Resistant according to IEC 60331, BS 6387
- Flame Retardant according to IEC 60332
- Low Smoke Test according to IEC 61034
- Halogen Content Test according IEC 60754
- Water Tree Test of XLPE Insulation (accelerated)
- Test voltage = 3 x Uo
- Test frequency = 500 Hz
- Core environment = 400C water
- Duration of test = 4 month
- Test after 4 months: Dielectric stress withstand >14kV/mm.

Moreover, test certificates shall be provided, proving that each cable type to be used has successfully passed type tests as required by the applicable standards during the last 12 months before award of contract. Otherwise, these tests have to be repeated or sample Sections.

Routine tests: according IEC 60502 – 1, Clause 15

- measurements of electrical resistance of conductors according to Clause 15.2
- voltage tests according to clause 15.3.

Sample tests: according IEC 60502 – 1, Clause 16

- conductor examination according Clause 16.4
- check of dimensions according Clause 16.5 to 16.8
- hot set test for EPR, HEPR and XLPE insulations and elastomeric sheath according Clause 16.9.

b) MV-cables

MV cables shall be workshop tested as per IEC 60502-2 with the following tests as a minimum:

Type tests:

- electrical type tests acc. to: IEC 60502 - 2 Clause 18
- non electrical type tests acc. to: IEC 60502 - 2 Clause 19.

Bangladesh-India Friendship Power Company (Pvt) Ltd. BIFPCL

Also following additional type tests shall be carried by the Contractor at their own cost prior to the first shipment of all offered cable if no type test certificates of identical cables are available:

- Fire Resistant according to IEC 60331, BS 6387
- Flame Retardant according to IEC 60332
- Low Smoke Test according to IEC 61034
- Halogen Content Test according IEC 60754
- Water Tree Test of XLPE Insulation (accelerated)
- Test voltage = 3 x Uo
- Test frequency = 500 Hz
- Core environment = 400C water
- Duration of test = 4 month
- Test after 4 months: Dielectric stress withstand >14kV/mm.

Moreover, test certificates shall be provided, proving that each cable type to be used has successfully passed type tests as required by the applicable Standards during the last 12 months before award of contract. Otherwise, these tests have to be repeated on sample Sections.

Routine tests: according IEC 60502 – 2, Clause 16

- measurements of electrical resistance of conductors according to Clause 16.2
- partial discharge test according to Clause 16.3 on cables having cores with conductor screens and insulation screens in accordance with Clause 7.1 and 7.2
- voltage tests according to clause 16.4.

Sample tests: according IEC 60502-2 Clause 17

- conductor examination according Clause 17.4
- check of dimensions according Clause 17.5 to 17.8
- voltage test for cables of rated voltages above 3.6/6 (7.2) kV according to Clause 17.9
- hot set test for EPR, HEPR and XLPE insulations and elatomeric sheath according Clause 17.10.

c) HV-cables

The 230 kV XLPE-Insulated Single-Core Underground Cables and Accessories shall be tested as per latest IEC 62067 including all subsequent amendments and relative standard. The Employer/Engineer shall witness the required Type and Sample tests.

The approval of the Employer/ Engineer or the passing of any such inspection or test will not however, prejudice the right of the Employer/ Engineer to reject the 230 kV XLPE-Insulated Single-Core Cables and accessories if it does not comply with the Specification.

Bangladesh-India Friendship Power Company (Pvt) Ltd. BIFPCL

Defects discovered during the type/routine/sample tests shall entitle the Employer/Engineer to reject the cables/accessories fabricated for this Project.

The Tenderer/ Contractor shall fabricate without additional cost the cable lengths and accessories necessary for the tests, over and above those required to complete the Works at Site.

For the definitions of the Type Tests, Sample Tests, Routine Tests and Tests after installation, reference shall generally be made to the relevant IEC Standards.

HV cables and accessories shall be workshop tested as per IEC 62067 with the following tests as a minimum:

Type tests on cable systems: according clause 12:

- Electrical type test according Clause 12.4
  - Check of insulation thickness acc. to Clause 12.4.1
  - Bending test on the cables acc. to Clause 12.4.4 followed by installation of accessories and a partial discharge test acc. to Clause 12.4.5
  - Tan δ measurement acc. to Clause 12.4.6
  - Heating cycle voltage test acc. Clause 12.4.7
  - Partial discharge test acc. to Clause 12.4.5 (at ambient and at high temperature)
  - Switching impulse voltage test acc. to Clause 12.4.8
  - Lightning impulse voltage test followed by a power frequency voltage test acc. to Clause 12.4.9
  - Test of outer protection for joints
  - Examination of cable system with cable and accessories after completion of tests acc. to Clause 12.4.10.
  - Tesitivity of semi-conducting screen acc. to Clause 12.4.11.

- Non electrical type tests according to Clause 12.5
  - Check of dimensions acc. to Clause 12.5.1
  - Tests for determination the mechanical properties of insulation acc. to Clause 12.5.2
  - Tests for determination the mechanical properties of oversheats acc. to Clause 12.5.3
  - Aging tests acc. to Clause 12.5.4
  - Pressure test at high temperature on oversheets acc. to Clause 12.5.6
  - Other test on oversheets according to the type used.
  - Hot set test for XLPE insulation acc. to Clause 12.5.10
  - Measurement of carbon black of black PE oversheats acc. to Clause 12.5.12
  - Water penetration test acc. to Clause 12.5.14.

Bangladesh-India Friendship Power Company (Pvt) Ltd. BIFPCL

Also following additional type tests shall be carried by the Contractor at their own cost prior to the first shipment of all offered cable if no type test certificates of identical cables are available:

- Fire Resistant according to IEC 60331, BS 6387
- Flame Retardant according to IEC 60332
- Low Smoke Test according to IEC 61034
- Halogen Content Test according IEC 60754
- Water Tree Test of XLPE Insulation (accelerated)
  - Test voltage = 3 x Uo
  - Test frequency = 500 Hz
  - Core environment = 400C water
  - Duration of test = 4 month
  - Test after 4 months: Dielectric stress withstand >14kV/mm.

Cables and accessories shall have passed type approval tests in accordance with IEC Specifications and details of the cable designs offered shall be given in the appropriate place in the Technical Schedules. Type test reports shall include cable design details and design drawings of each jointing accessory included in the type test.

The Tenderer/Contractor shall submit certified copies of type test certificates covering the proposed Cables.

Routine tests: according Clause 9
- partial discharge test according to Clause 9.2
- voltage tests according to according to Clause 9.3
- electrical test on oversheath according to Clause 9.4

Sample tests: according to Clause 10
- conductor examination according Clause 10.4
- measurement of electrical resistance of conductor according to Clause 10.5
- measurement of thickness of insulation and oversheath according to Clause 10.6
- measurement of thickness of metallic sheath according to Clause 10.7
- measurement of diameters according to Clause 10.8
- hot set test XLPE insulations and elatomeric sheath according Clause 10.9
- measurement of capacitance according to Clause 10.10
- lightning impulse voltage test follows by a power frequency voltage test according to Clause 10.12
- water penetration test according Clause 12.5.14
- Lead alloy composition and behavior (BS 3908, BS EN 12548).

Bangladesh-India Friendship Power Company (Pvt) Ltd. BIFPCL

Type tests of accessories
All accessories shall be tested as per IEC 62067 and all subsequent amendments and relative standards considering Test of Outer protection for buried joints (if applicable).

Routine Tests, Insulation Joints
The insulation flange shall be designed to withstand tests voltages as specified in the Technical Data Sheets and shall be tested accordingly.

Routine Tests, Bonding/Earthing Leads
The Bonding/Earthing Leads shall be designed to withstand tests voltages and currents as specified in the Technical Data Sheets and shall be tested accordingly.

Telecommunication installations
IEC 60215 Safety requirements for radio transmitting equipment

Aerials
IEC 60169 Radio-frequency connectors

Power installations up to 1000 V
IEC 60364 Electrical installations of buildings
IEC 61439-4 Particular requirements for assemblies for construction sites (ACS)

Power installation above 1000 V
IEC 60060 High-voltage test techniques
IEC 62271 HV switchgear and control gear
(incl. Appendix AA "Internal Arc Test")

Protection equipment
Equipment for modular static protection systems (e.g. generator, distance, busbar, protection, etc.) pre-assembled in the relevant standardized boards/ cubicles etc. shall be tested in the manufacturers' workshops according to IEC 60255 as far as wiring and proper function is concerned. Simulated inputs (binary signals, current and voltage inputs from test power supplies) shall be used.

Fire alarm system
All relevant routine and type tests according to:
NFPA National Fire Protection Association
DIN VDE 0800 Telecommunications
DIN VDE 0833 Alarm systems for fire, intrusion and hold-up

Bangladesh-India Friendship Power Company (Pvt) Ltd. BIFPCL

B0.7.2.5 Control and monitoring equipment

All control and monitoring equipment shall be tested at the manufacturers' works before dispatch to site. Certificates shall be issued for

- synchronizing units
- flow evaluators

On request the correct operation of equipment with specified temperature and humidity limits shall be demonstrated by tests conducted within the limits.

Electrical measuring instruments
All electrical measuring instruments shall be tested in accordance with the following rules and regulations. Alternatively, equivalent standards approved by the Employer's Representative may be used.

IEC 60051	Recommendations for direct-acting indicating electrical measuring instruments and their accessories
IEC 60258	Direct acting recording electrical measuring instruments and their accessories
IEC 61036	Alternating current static watt-hour meters for active energy
IEC 61010	Safety requirements for electrical equipment for measurement, control and laboratory use

Electrical remote indication
Meters for active power, reactive power and similar remote indication equipment:

VDE 0418	Regulations for electric integrating meters
IEC 60338	Telemetering for consumption and demand

Calibration Tests
The Contractor shall conduct calibration tests of the following instruments and equipment:

- all local indicators over the full range of the indicator
- all transmitters over the full range of the transmitter
- all binary transmitters over the full range including initial setting
- all remote indicators over the full range of the indicator
- all recorders over the full range of the recorder
- one of each type of indication loop with circuit resistance of the loop increased to a value which is equal to the highest value expected, and under worst case operating conditions
- all superheated steam thermocouples
- one of each type of thermocouple or resistance element
- all kinds of analogue transmitters over the full measuring range

Bangladesh-India Friendship Power Company (Pvt) Ltd. BIFPCL

- all modules and subassemblies for measuring and control e.g. analogue limit monitors, flow evaluators, function generators
- all quantity meters
- all synchronizing units according to IEC standards
- the actual dimensions of all orifices, nozzles, Venturi nozzles have to be checked as per ISO5167.

Closed-loop control systems
All main closed-loop control systems shall be tested for polarity and function in accordance with the applicable standards. Control valves shall be tested in accordance with mechanical functional tests on control valves and shall be performed with the actuator mounted (open to closed position and vice-versa). Actuators shall be subject to mechanical and electrical function tests.

Sequence logic equipment
All sequence logic equipment shall be tested using simulated inputs.

Alarm annunciator and fault printing system
The alarm annunciator and fault printing system shall be tested using simulated inputs.

DCS system
The system shall be thoroughly tested at the manufacturers' workshops before dispatch to site. Test programs shall be devised and these shall subsequently be made available to the Employer's Representative. Tests shall be made to ensure that the system operates correctly within the ambient conditions as specified by the manufacturer and that if these conditions are exceeded, i.e. in the case of failure of the air-conditioning system, that the system will automatically fail safe and that neither hardware nor software will be damaged.

Further I&C equipment
Type test reports shall be provided for the following:
- UPS
- 24 V DC battery chargers
- Batteries
- Control valves
- Instrumentation cables
- Flow nozzle orifice plates
- Measuring instruments
- Local instrument enclosures
- Local instrument racks
- PLCs
- Etc.

Bangladesh-India Friendship Power Company (Pvt) Ltd. BIFPCL

Type test reports

The minimum type test reports for each of the major I&C systems shall be as follows:

1. Surge Withstand Capability (SWC) for solid state equipment/ systems
   All solid state systems/ equipment shall be able to withstand the electrical noise and surges as encountered in actual service conditions and inherent in a Power Plant. All the solid state systems/ equipment shall be provided with all required protections that needs the surge withstand capability as defined in ANSI 37.90.1/ IEEE-472. Hence all front end cards which receive external signals like analogue input & output modules, binary input & output modules, etc. including power supplies, data highway, data links shall be provided with protections that meet the surge withstand capability as defined in ANSI 37.90.1/ IEEE-472. Complete details of the features incorporated in electronic systems to meet this requirement, the relevant tests carried out, the certificates etc. shall be submitted with the proposal. As an alternative to above, suitable class of EN61000-4-12 which is equivalent to ANSI 37.90.1/ IEEE-472 may also be adopted for SWC test.
2. Dry heat test as per IEC 60068-2-2 or equivalent
3. Damp heat test as per IEC 60068-2-3 or equivalent
4. Vibration test as per IEC 60068-2-6 or equivalent
5. Electrostatic discharge tests as per EN 61000-4-2 or equivalent
6. Radio frequency immunity test as per EN 61000-4-6 or equivalent
7. Electromagnetic field immunity as per EN 61000-4-3 or equivalent

Tests as listed under items number 5 to 7 as applicable for electronic cards only as defined under item 1 above.

B0.7.3 Testing at site

B0.7.3.1 Civil works testing

The Contractor shall carry out all required civil construction tests. Thereby part of the test like concrete and earthwork tests have to be carried out at site, other tests have to be performed in the manufacturer workshops.

The Contractor shall submit all test certificates of materials subject to approval and shall arrange for tests of all materials to be carried out in laboratories on site or elsewhere. The cost of all test equipment, samples, tests and transport to the laboratory shall be borne by the Contractor.

The testing operations shall be performed in accordance with the relevant codes and standards and under the supervision of the Employer.

Bangladesh-India Friendship Power Company (Pvt) Ltd. BIFPCL

Where in the specifications materials are specified to be approved samples shall be submitted for approval at the earliest possible date and strictly before any purchasing or delivery to the site is made. The individual tests and inspection for the materials, supply and execution shall be carried out in compliance with the requirements of the individual technical specifications. In the case of rejection, further samples of the rejected materials shall be submitted to SC until they are approved or the material is replaced. The Employer may reject any material which in his opinion is not in accordance with the approved standard. All samples shall be submitted free of charge to the Employer.

The characteristics as determined in the samples which are approved shall indicate the standard to be maintained in the materials used in the execution of the works.

The test samples of materials subject to approval by the Employer shall be kept in a safe place and protected against damage or deterioration until completion of the works.

For materials (e.g. steelwork, pipes, ducts, etc.) to be manufactured in workshops respective manufacturer test certificates including test results shall be submitted to the Employer subject to approval.

After final completion of certain civil structures/ parts to be ready for erection of further equipment individual "Civil Completion Certificates" shall be issued by the Contractor under the following conditions:

- Except for minor items of work that would not affect the safety, all civil works for applicable parts, structures or buildings have been carried out and tested
- All such civil works are in a manner that does not void any subcontractor or vendor warranties or violate any applicable law or applicable permit
- Punch List has been agreed upon by the Employer and the Contractor
- Contractor warrants that all necessary works have been undertaken and all applicable parts, structures or buildings are ready for erection.

If the Employer is satisfied that the pre-conditions for the issuance of the Civil Completion Certificate for the respective civil structures/ parts have been met the Civil Construction Completion Certificate shall be signed off by the Employer.

Further testing requirements for civil works are specified in **Section B9**.

An indicative field quality plan for civil works to be followed by the Contractor at site is required to be submitted with the Tender.

Bangladesh-India Friendship Power Company (Pvt) Ltd. BIFPCL

B0.7.3.2 Erection tests

General

During erection all required erection tests as well as final erection checks of the mechanical completion of the systems and part thereof have to be performed.

The Employer shall have the right to witness on request all tests on site and shall be informed of site test 24 hours in advance.

After successful mechanical completion of each system, Individual Erection Completion Certificates will be issued.

The activities necessary for mechanical completion shall include but not be limited to following testing:

- visual inspection after unloading at site
- checking of completion of relevant systems
- completion of buildings and civil works
- test of ventilating and air-conditioning units
- alignment of rotating equipment coupled on site
- safety audit
- testing of site welds (non-destructive examinations)
- pressure testing, leak tests, tightness tests
- checking of pipe hangers, supports, guides, etc.
- pipe line and equipment flushing and cleaning
- chemical protection of piping systems
- checking of coating
- testing of cranes and hoists.

Electrical equipment tests

The following tests or measurements must be made during and after erection but before any item of equipment is put on trial operation:

- design and visual checks
- screwed connections for correct assembly
- terminals and terminal connections for correct assembly
- checking of earthing connections and testing of earthing resistances
- measurement of insulation values (didactic tests)
- verification of earthing conditions
- fire-proof partitioning
- marking, inscription, provision of designation plates
- rotating-field measurement
- phase coincidence with 2 half-busbars
- voltage checks
- polarity checks in the case of DC voltages
- fuses, overcurrent trips, short circuit trips, time settings, relay settings
- oil levels

Bangladesh-India Friendship Power Company (Pvt) Ltd. BIFPCL

- status indication, alarm and trip signals
- checks on wiring and cabling for conformity with the constructional circuit drawings and plans
- high voltage tests
- current and voltage transformer circuits
- functional test of all protection relays including winding and oil temperature monitoring as well as Buchholz protection etc.
- interface with the DCS and SCADA.

The tests shall be carried out according to relevant standards.

The Contractor shall submit for each test of all equipment a method statement, with relevant diagrams explaining the procedure of the tests and test criteria supported by relevant standards and test methods.

All major equipment shall have a separate test package.

All high voltage tests shall be carried out at 50 Hz. Equipment for which DC tests is proposed shall be justified and approved by Employer/Engineer. HV tests of switchgears shall be carried out with the relevant circuit breakers in open and closed positions.

Unless otherwise agreed, all erection and civil works related to the equipment shall be completed before starting any site tests.
All switchgears shall be verified by primary injection in addition to secondary injection.

Generators

This Section covers the specific requirements for the site tests and performance tests requirements in the turbine plant.

These tests shall include:

- Routine tests as per IEC 60034 - as far as practicable under site condition comprising of:
  - testing of running behaviour (overspeed)
  - determination of temp. rises of coolants and lubricants for bearing and shaft seals
  - determination of friction losses
  - recording of no-load saturation characteristics and determination of core losses
  - measurement of shaft voltage
  - verification of phase sequence and appropriate terminal marking
  - measurement of excitation current and determination of losses at rated current on short circuit
  - calculation of efficiency from sum of individual losses
  - winding insulation measurement
  - HV test on windings
  - functional test of accessories and attachments

- measurement of excitation response time – GTG: measuring will be carried out at site during commissioning
- overall characteristics coupled with generator and AVR cubicle at no load (applicable for the assembled unit consisting of generator, exciter and voltage regulator) – GTG: measuring will be carried out at site during commissioning.

The Contractor has to provide a detailed test procedure subject to approval by the Employer/Engineer.

Motors
Tests at Site (with motor coupled):

- measurement of insulation resistance
- measurement of shaft current
- measurement of motor vibrations
- at motors rated 47 kW or higher, in addition:
  - oscillographic measurement of starting current (if not performed during workshop testing)
  - measurement of starting period.

Switchgear for Voltages above 1 kV
The complete installation shall be tested at site as follows:

- dielectric test
- visual inspection
- contact resistance/torque test of bus bar joints
- CT's, VT's ratio, magnetisation characteristic and burden measurement
- HV test
- mechanical functioning test
- test of the functional sequence
- testing of all interlocks
- testing of all protection relays and circuits by primary/secondary injection and functional tests of the arc protection
- testing of high speed transfer systems
- testing of all alarms (local and remote).

LV switchgear (AC and DC)
The complete switchgear and the individual apparatus shall be tested on site as follows:

- visual inspection
- dielectric test
- contact resistance/torque test of bus bar joints
- CT's, VT's ratio, magnetisation characteristic and burden measurement
- testing of all interlocks
- setting and testing of all protection relays and circuits by primary/ secondary injection. Test kit of adequate rating to be provided

- testing of automatic change over devices
- testing of all alarms (local and remote)
- functional test
- test of the functional sequence.

Setting and functional test of protection devices (primary injection method). However, test plugs and socket facilities for secondary injection tests shall also be made available. Tests kits of adequate ratings shall be made available for the tests.

Batteries and chargers
Chargers and batteries shall be tested together in the factory. All factory tests are to be repeated at site.

Chargers
- visual inspection (to be repeated on site)
- functional tests (to be repeated on site)
- heat run (type test)
- output voltage stability measured for 25% load steps
- ripple voltage measurement without connected battery
- ripple measurement (voltage and current) with connected battery
- insulation test (to be repeated on site).

Batteries
- visual inspection (to be repeated on site)
- insulation test (to be repeated on site)
- charge test and discharge tests (100%).

Fuse Box
- Visual inspection (to be repeated on site)
- Functional tests (on site)
- Insulation test (on site).

Inverters & DC/DC Converters
Following test shall be carried out:

- visual inspection (to be repeated on site)
- functional tests (to be repeated on site)
- insulation test (to be repeated on site).

भारत हेवी ★ B.H.E.L. ★ अंतर्राष्ट्रीय परिचालन प्रभाग INTERNATIONAL OPERATIONS DIVISION नई दिल्ली / New Delhi-3 (India)

Bangladesh-India Friendship Power Company (Pvt) Ltd. ★ BIFPCL

Earthing and lightning protection

The complete earthing and lightning protection systems shall be tested as follows:

- The earthing system as a whole shall be tested and verified before putting any major equipment into operation.
- visual inspection of exposed elements
- Measurement of the earth electrode potential UE by the voltmeter/ ammeter method, test current 100 300 A or an equivalent, approved method if above will be proved to be not feasible,
- measurement of the touch potential UB,
- measurement of step potential.

Diesel generator units

The diesel generator units (DGU) shall be thoroughly tested at site. The acceptance tests shall be performed according to the Technical Specifications and acc. to ISO 8528 6:1993 (E) and ISO 3046-1:1995 (E) and -3:1989 (E) for the diesel engine. At site the diesel engine shall be measured and documented according to the stipulations made in Clause 7.6.20. The exhaust gas shall be invisible when the Unit is operating at loads between 50 and 110%. The diesel engine's filter smoke number shall be measured according to BOSCH Index No. 3 or better within a load range from 60 to 100%. A test report in English language shall be issued according to ISO 8528:1993 (E). Upon full satisfaction of the Employer/Engineer after the successful operation tests, in every respect, and that all components are working properly, the DGU with all ancillaries shall be operated at 100% output for 48 hrs without failure or interruption whatsoever. The performance test measurements of the DGU shall be performed according to ISO 8528 6:1993 (E) for the diesel generator unit, ISO 3046-1:1995 (E) and -3:1989 (E) for the diesel engine and latest issue of IEC 60034-2 for the Generator. All guaranteed values shall be assumed to include all necessary tolerances for accuracy of testing, sampling, instrumentation, notwithstanding the performance test code standard. No further tolerances of any kind shall be permitted.

INTERNATIONAL OPERATIONS DIVISION

Bangladesh-India Friendship Power Company (Pvt) Ltd. BIFPCL

230 kV XLPE Cables

Test after laying is to be recommended by the manufacturer considering the following minimum requirements and recommendations from CIGRE WG.21.9 (Electra No.173 August '97), IEC 62067 and other applicable standards to Employer/ Engineers approval.

- visual and function test of bonding/earthing system
- phase Identification Test
- conductor and screen/sheath Continuity Test
- primary connection check
- cable connection bolt tightness check
- cable supporting check
- cable fixing check
- insulation resistance test before and after installation
- DC conductor resistance test (IEC 60228)
- contact resistance test of connecting bars in link boxes
- capacitance test
- earthing measurements
- positive/negative and zero sequence impedance measurements
- testing of SVL
- cross bonding check, primary injection Subsequent repeat tests (after guarantee period)
- DC sheath test according Clause 5 of IEC 60229 between metallic sheath/screen/armouring including cross bonding system, etc. and ground.
- AC voltage test according IEC 62067 Section 14.2.
- measurements of induced voltages on pilot/telephone cables installed in parallel with the power cables.

Tests accord the Electricity Transmission Code of Bangladesh and Great Britain

Any other tests required to demonstrate compliance with the above indicated Grid Codes.

B0.7.3.3 Pre-commissioning tests

Preconditions for the pre-commissioning are:

- the issue of the individual Erection Completion Certificates;
- the rectification of all relevant erection punch points; and
- the availability of the accepted commissioning test program and commissioning procedures.

The pre-commissioning tests shall cover mainly the functional tests of the individual items of all mechanical, electrical and I&C systems including their alarm and tripping systems. Following tests shall be included, but not limited to:

Mechanical equipment

- Individual pre-commissioning runs of all rotating equipment such as pumps, compressors, dosing equipment etc.
- Functional tests of the mechanical equipment
- Testing and adjustment of safety devices

Electrical equipment

As far as not already covered by the erection tests the pre-commissioning tests shall cover:

- Voltage tests
- Generator and transformer protection system checks
- Automatic voltage and reactive power control (AVQC), governor setting and adjustment and response to grid system signals
- Trip tests
- Functional tests of the equipment e.g.:
  - Motor checks
  - Circuit breakers, LV, MV, HV cabling and switchgears checks for operability
  - Batteries, chargers and UPS checks for operability
- Remaining tests on turbine generator: In addition, a repetition of winding resistance and insulation resistance measurement, as well as dielectric tests shall be carried out in any case on each turbine generator.

Control equipment

- Comprehensive loop tests shall be performed for all measuring loops at least for 0, 50% and 100% value.
- Closed loop control checks up to DCS (for all functions like indication, control, alarms, etc.):
  - Polarity and function test in accordance with the applicable standards.
  - Control valves shall be tested in accordance with mechanical functional tests on control valves and shall be performed with the actuator mounted (open to closed position and vice-versa)
  - Actuators shall be subject to mechanical and electrical function tests.
- All sequence logic equipment shall be tested using simulated inputs.
- The alarm annunciation and sequence of event recording system shall be tested using simulated inputs.
- Binary field contact circuit fault detection.
- Functional tests of control equipment, interlocks, inter-tripping, protection inputs, etc.
- Test of signal exchange with other systems (also with third parties – like LDC, etc.)
- Archiving system (capacity, consistency, redundancy, access times).

भारत हैवी इलेक्ट्रिकल्स लि. / BHEL
अंतर्राष्ट्रीय परिचालन प्रभाग
INTERNATIONAL OPERATIONS DIVISION
नई दिल्ली / New Delhi-3 (India)

Bangladesh-India Friendship Power Ltd.
BIFPCL

- Reports generation
- Emission analyser calibration and emission evaluation tests
- Calibration of metering system (accuracy shall be proven by certificates)

B0.7.3.4 Tests on Completion (Commissioning tests)

Preconditions of the Tests on Completion are:

- the successful completion of the individual erection checks of all items of the whole system;
- the issuing of the Final Erection Completion Certificate; and
- the successful completion of all pre-commissioning test.

Should the Employer decide that the preconditions for the Tests on Completion have not been adequately met, the Employer will advise the Contractor accordingly and withhold the commencement of the the Tests on Completion until the outstanding work is completed.

The Tests on Completion shall prove that the Plant is prepared and adjusted to ensure the correct functioning of the individual components and of the complete Plant.

The Tests on Completion shall cover at least following tests:

- Protection tests
  - Operation of selected turbine train protection devices including the following as a minimum:
    - fire protection
    - boiler protection
    - steam turbine protection
    - generator protection
    - transformer protection.

Method of alarm/ trip condition reset for subsequent starting.

- Operation of auxiliary systems:

Method of changeover of main equipment to stand-by equipment prior to Plant starting (see start-up tests) and during normal operation for fuel oil, coal handling, ash handling, oil lube and cooling systems

- Operation of fire protection systems.

- Isolation procedures
  - Method of isolation of plant equipment for safe shut-down and maintenance procedures including as a minimum:
    - HV station and unit supplies
    - LV supplies
    - fuel oil systems
    - coal handling systems
    - ash handling systems

    - fire protection systems.
- Protection systems/ settings, in accordance with agreed design and the requirements of the transmission system.
- Start-up tests
    - normal semi-automatic start to preset load
    - staged semi-automatic including start to synchronous speed, manual synchronizing (including synchro-check), automatic synchronizing, manual and automatic loading
    - starting with stand-by auxiliaries
    - operation of all auxiliaries.
- Verification of start-up times and loading rates of power unit and steam generator at various downtime conditions.
- Power unit(s)/Plant, to test partial and full load rejection to demonstrate
    - full load rejection tests to measure transient maximum speed and steady state speed at normal governor droop setting
    - method of resynchronism to be demonstrated steam turbine bypass operation capability.
- Power unit(s)/Plant, to verify and check
    - operating stability when operated between 30% and 100% nominal load conditions with load variations by increasing or decreasing the electric load
    - start-up/main fuel change-over:
        - semi-automatic change-over from fuel oil operation to coal operation
        - semi-automatic change-over from coal operation to fuel oil operation.
- Demonstration of the capabilities of the power unit to operate at rated voltage and frequency, at power factors and reactive conditions between 0.85 (lag) and 0.95 (lead).
- Start-up tests of the Plant equipment, facilities and systems including checking of automatic change-over of standby facilities as well as fuel.
- Verification of vibration guarantees.
- Environmental monitoring equipment, water quality monitoring equipment, functioning tests and verification of guarantees.
- Demonstration of the teledispatching and telemetering systems.
- Verification of Active Power Response and Voltage Control Response according to the requirements specified in the Network Connection Conditions.
- Demonstration of proper controlling, monitoring and recording according to the requirements of the Grid Code, including but not limited to the following tests:
    - Reactive Power
    - Fault Detection and Clearing Limits
    - Load Following Capability
    - Black Start (if applicable)
    - Voltage Following Capability (AVQC)
    - Excitation System and Power System Stabiliser
    - Primary, Secondary and High Frequency MW Response

- Unit Start
- Despatch Ramp Rate
- Protection System
- House Load Operation
- Underfrequency Relay
- Loss of AC Power Supply
- Minimum Load
- Site Test for Validation
- Verification of completeness of scope of supply.

B0.7.3.4.1 Additional test in accordance with the PPA

Tests prior to synchronisation of each generating unit of the Plant
According to the requirements of the BPDB which are part of the PPA, the Contractor shall carry out the following additional tests prior to synchronisation of each generating unit of the Plant:

- automatic voltage regulator setting and adjusting in stand-still condition and with the generator running at no load
- turbine governor control checks, including (but not limited to) a steam governor overspeed test (This test may be performed after a specified period of running of the Unit on load as per the manufacturer's recommendation)
- open circuit and short circuit tests on the generator
- functional testing and timing of high voltage switchgear in the substation of the Facility
- The Company and BPDB shall verify that the protection level settings for switchyard protection equipment are as agreed by the Joint Coordinating Committee
- Voltage phasing checks will be carried out between the Grid System and the Facility; and

All inter-tripping circuits between the Plant and BPDB equipment shall be proved.

Tests for commissioning of each generating unit of the Plant

In addition to the above specified tests and according to the requirements of the BPDB which are part of the PPA, the following tests shall be carried out by the Contractor for commissioning of each generating unit of the Plant after completing the tests set out before:

a. **Dependable Capacity Test**
Refer to Section **0.7.4.**

b. **Reliability Run**
Refer to Section **B.0.7.5**

c. **Automatic Voltage Regulator ("AVR") Droop Test**
The AVR will be demonstrated to control the steam turbine generator voltage over its entire set range.

d. **Steam Turbine Governor Operation Test**
The operation of the steam turbine speed governor will be demonstrated.

e. **Reactive Capacity Test**
This test will demonstrate the capability of the Plant to operate at rated voltage and frequency at power factors and under reactive conditions in accordance with the manufacturer's generator rating curves to be provided by the Contractor, insofar as these tests can be accommodated within the grid system.

f. **Minimum Load Capability Test**
This test will demonstrate the capability of each Unit to be operated at minimum stable load while the steam turbines, and auxiliaries remain in a stable and controlled condition, see also

B0.7.3.4.2 72h Full Load Continuous Test Run

After successful completion of the Tests on Completion and availability of the Commissioning Completion Certificate (CCC), signed by the Employer and the Contractor, the "Authorization to Start the 72 h Full Load Continuous Test" shall be signed.

No trip is admitted during these 72 h. Should the Plant or a Unit, as the case may be, not follow the requested load during the 72 h test, the test shall be restarted.

B0.7.4 Performance Tests

Performance Tests of the Unit(s)
After successful completion of the 72h Full Load Continuous Test Run and after relevant test protocols have been accepted by the Employer for the Unit(s) and Common Facilities, the Contractor shall be allowed to prepare the Unit(s) for the Performance Tests.

For the Unit(s) following guarantees given in the **Technical Schedule B0** shall be tested during the related Performance Test; this includes:

- Performance guarantees of the Unit(s)
- Operating guarantees
- Emission guarantees
- Guarantees of steam generator(s), steam turbine generator(s), flue gas treatment systems etc.

Bangladesh-India Friendship Power Company (Pvt) Ltd. BIFPCL

Performance Test of the Plant

After completion of the Performance Tests of the Unit(s), the guarantees of the Plant and the common facilities shall be tested in a separate Performance Test; this includes:

- Performance guarantees of the Plant
- Emission guarantees of the Plant
- Emission guarantees of the auxiliary boiler
- Noise guarantees
- Guarantees of the water and waste water treatment systems
- Effluent and water outfall guarantees.

Dependable Capacity Test according to the PPA

Dependable Capacity means- means at any given time the net amount of capacity at the tariff metering; either for the first generating unit or for the Plant, as the case may be, as determined by the most recent dependable capacity test which shall be comply with ASME standards and shall be carried out as part of the Reliability Run. The Dependable Capacity of the Plant is measured at the Delivery Point. It equals the average Export Power Output, corrected to Reference Site Conditions using correction factors, delivered during twelve continuous thirty (30) minute periods divided by six (6) hours.

Dependable Capacity is the power output/capacity of a unit or the plant which can be reliable evacuated to the grid and which shall be verified by the "Dependable Capacity Test according to PPA". In additon refer to the defnition under B0.2.9.2

The Dependable Capacity Test and the Performance Testing in general will carried out under the the actual prevail conditions. The measued power output and other guaranteed performance data shall be corrected to the reference conditions using the correction curves to be provided by the Bidder/Contractor.

Performance Tests shall be conducted in accordance with following standards:

• the Plant	ASME PTC 46
• steam generator	ASME PTC 4
• steam turbine	ASME PTC 6
• cooling tower	ASME PTC 23
• FGD plant	ASME PTC 40.

Bangladesh-India Friendship Power Company (Pvt) Ltd. BIFPCL

As for supercritical steam power plants operation without make-up must be possible for a defined time period, the guarantee figures shall not include make-up.

भारत हैवी इलेक्ट्रिकल्स लि. / BHEL BIFPCL अंतर्राष्ट्रीय परिचालन प्रभाग INTERNATIONAL OPERATIONS DIVISION New Delhi-3 (India)

The curves required for the correction of the power output and specific heat rate to the site specified ambient conditions shall be listed in the technical schedules of the Plant performance and steam generator and steam turbine performance, and shall be submitted with the Tender. These curves shall be conclusive and no extra correction shall be given.

The margins required for instrument inaccuracies and for all other reasons shall be deemed to be included in the guarantee figures. The actual figures determined during performance tests shall hence be not corrected with any margins due to instrument inaccuracies prior to comparison with the guarantee figures.

Degradation and fouling during commissioning and other operation prior to Provisional Acceptance shall be deemed to be included in the guarantee figures. The actual figures determined during performance tests shall hence be not corrected for any degradation or fouling effect prior to comparison with the guarantee figures.

Degradation curves for the Plant and Unit(s) performance shall be submitted by the Contractor with bid. The curves shall show the equipment's degradation in power output and heat rate versus equivalent operating hours. The curves shall be applicable up to and including final major overhaul.

Test program

In due time prior to the tests a detailed procedure covering the testing to be undertaken and the methods to be employed shall be provided by the Contactor. The test procedure shall also detail areas of responsibility and the items that specifically require preparation and agreement before the tests can be carried out.

The test program shall cover the following documents but not be limited to:

- test procedure and standards (including proposed formulae / curves and standards)
- test schedule
- type of test
- manpower and deployment schedule of the Contractor for performing the tests forms of test records and report
- description of instrumentation to be used, including accuracy, and calibration test results
- method of data recording
- list of all auxiliary loads that will be operating during the tests. The list of auxiliary loads shall be provided with the test program and agreed in the Test Procedure.
- method and equations/correction curves used for adjustment of recorded data to the design conditions.

Bangladesh-India Friendship Power Company (Pvt) Ltd. BIFPCL

भारत हेवी इलेक्ट्रिकल्स लि. / BHEL अंतराष्ट्रीय परिचालन प्रभाग INTERNATIONAL OPERATIONS DIVISION New Delhi-3 (India)

Test responsibility
All tests shall be prepared and conducted by the Contractor. The Plant shall be operated by Contractor's operation personnel.

The Employer and/or an independent third party, awarded by the Employer.shall have the right to witness the tests.

Contractor's personnel appointed to carry out the tests shall be adequately skilled and experienced. Information on these personnel shall be provided to the Employer as part of the test program for review.

Test instrumentation
The Contractor shall supply and install all test instrumentation needed to conduct the tests. Temporary instrumentation installed for test purposes only and shall be retained at Site upon the satisfactory conclusion of all tests and shall be then removed.

All instruments to be used for the test shall be strictly dedicated calibrated measurement equipment. Each measuring instrument used shall be according to controlled and provided with a valid calibration certificate.

The calibration of PG Test instrument shall be carried out as per PTC-6 by an independent authorised company, which shall have appropriated quality standards and which shall be to be approved by the Employer, except for instruments which are calibrated and certified at a certified laboratory and holding the authorized traceability certificate. The certificate shall not be older than six (6) months.

Test Duration
The test shall begin after the Plant or a Unit including common facilities, as the case may be, has established stable operation, as judged by the Employer and/or an independent third party, awarded by the Employer.

The test duration shall be in accordance with the standards and codes.

One 60-minute test run shall be conducted for each guaranteed load point, during which the operating conditions shall remain within the defined plant stability criteria.

Test conditions
Performance tests shall be conducted at conditions close to the conditions of the Guarantees. Thereby the boiler and steam turbine cycle shall be adjusted to the conditions of the corresponding heat balance diagram.

Since the accuracy of the test results highly depend on the exact water-steam cycle arrangement respective cycle isolation is required to avoid any unknown cycle leakages. The valve position list has to be provided by the Contractor prior to the performance test. This cycle arrangement shall fully remain during the whole testing period. Any changes of the performance

conditions during the tests are not allowed.

Test evaluation

The Contractor shall submit for the acceptance of the Performance Test all detailed measurements, calculations and individual test results (such as, but not limited to turbine efficiency calculations, generator and transformer details, condenser performance, feedwater heaters and deaerator details, boiler efficiency calculations, pulverizing fineness and other results, air heater temperature traverses and leakage results, coal handling system performance, ash characteristics and ash handling systems performance, ESP and FGD performance and emissions, individual auxiliary power consumption figures, major consumers performance, noise and effluents etc.) and the corrections made based on the correction curves.°

The Performance Test report shall be submitted by the Contractor. This report shall include, as a minimum, the following:

- description of the test procedures
- instrumentation details and calibrations (not older than six months)
- full process flow diagrams for fuel, air and flue gas and water and steam with indication of instrument position
- standards that were used
- test logs and summary (arithmetic average) of test readings used for performance calculations
- full set of correction curves
- calculations
- instrument calibration certificates
- list of all auxiliary loads that were operated during the tests
- performance tests results for the "As-run" condition and for the "Corrected as-run conditions"
- conclusions of performance tests: test passed or not.

B0.7.5 Reliability test run

After successful completion of all Performance Tests the Plant or a Unit including common facilities, as the case may be, shall start the 30 (thirty) days Reliability Test Run.

During the Reliability Test Run the Contractor shall demonstrate that the Plant or a Unit including common facilities, as the case may be, is fit for commercial operation.

During the specified periods, the Plant shall be operated continuously and in accordance with the prevailing power requirements of the Transmission System/BPDB or as required by the Employer.

During the Reliability Test Run the Employer's operation personnel shall operate the Plant under the full supervision and the responsibility of the

Contractor's Personnel and according to the O&M manual as supplied by the Contractor.

For the successful completion of the Reliability Test Run, a maximum of 4 trippings of not more than combined outage of 24 hours are allowed, otherwise the Reliability Test Run will be considered as failed and a new Reliability Test Run will have to be executed until the test has been completed.

At the conclusion of the Reliability Test Run the Contractor shall request from the Employer the issuing of the Provisional Acceptance Certificate (PAC).

A list of minor pending items, which are at the judgment of the Employer do not jeopardize the trouble-free operation of the Plant or a Unit including common facilities, as the case may be, could be attached to that certificate. The envisaged completion date for each item shall be stated in it.

With the issuing of the PAC the Employer takes legal possession of the Plant or a Unit including common facilities, as the case may be, and the Warranty Period will begin.

During the Warranty Period the Contractor has to keep at site at least three Warranty Engineers at Site. Part of their duty shall be inter alia to complete in time the works for the minor punch items mentioned in the PAC. They shall issue, together with the Employer, special reports, should any damages occur to any equipment. Moreover they shall assist the Employer during the daily plant operation and issue additional operational instructions, if requested. They shall assist the Maintenance Superintendent in his work organization and spare part handling procedure.

At the successful conclusion of the Warranty Period, the Contractor shall request the Employer to issue the Final Acceptance Certificate (FAC).

Additional requirements as per the PPA The Facility shall operate continuously (without interruption) for
Seventy two (72) continuous hours at then demonstrated Dependable Capacity. For ninety six (96) hours the output shall be as requested by BPDB in accordance with the Dispatch provisions as outlined in the PPA.

Abbreviations

(Please refer also to relevant Sections "**Standards and Codes" and "Units of measurement**")

AASHTO	American Association of State Highway and Transportation Officials
AC	Alternating Current
AGC	Automatic Grid Control

भारत हेवी इलेक्ट्रिकल्स लिमिटेड
अंतर्राष्ट्रीय परिचालन प्रभाग
INTERNATIONAL OPERATIONS DIVISION
नई दिल्ली / New Delhi-3 (India)

Bangladesh-India Friendship Power Company (Pvt) Ltd.
BIFPCL

ASC	Average Site Conditions
ATRS	Automatic Turbine Run-up System
ATT	Automatic Turbine Testing System
AVQR	Automatic Voltage and Reactive Power Control
AVT	All Volatile Treatment
BFP	Boiler Feedwater Pump
BIMS	Building Information Management System
BMCR	Boiler Maximum Continuous Rating
BMS	Burner Management System
BOD	Biological Oxygen Demand
BOP	Balance of Plant
BOQ	Balance of Quantities
BPDB	Bangladesh Power Development Board
BPS	Boiler Protection System
CCR	Central Control Room
CCTV	Closed Circuit Television
CD	Chart Datum
CEMS	Continuous Emission Monitoring System
CHP	Coal Handling Plant
CO	Carbon Monoxide
COD	Commercial Operation Date
COD	Chemical Oxygen Demand
CT	Current Transformer
CW	Cooling Water
DAF	Dry Ash Free
DC	Direct Current
DCDB	DC Distribution Board
DCS	Distributed Control System
DDCMIS	Distributed Digital Control Monitoring & Information System
DCS	Distributed Control System
DOE	Department of the Environment, Bangladesh
DOSH	Department of Safety and Health, Bangladesh
DPC	Damp Proof Course
DWT	Dead Weight Tons
ECP	Electrochlorination Plant
EHG	Turbine Electro Hydraulic Governor Control System
EHSG - TTP	IFC Environmental Health and Safety Guidelines Thermal Power Plants
EHV	Extra High Voltage (500 kV)
EIA	Environmental Impact Assessment
EMC	Electro-Magnetic Compatibility
EPC	Engineering, Procurement, Construction
ESP	Electrostatic Precipitator
ETP	Effluent Treatment Plant
FDF	Forced Draught Fan
FEGT	Furnace Exit Gas Temperature
FGD	Flue Gas Desulphurization Plant
FTU	Field Mounted Termination Unit

GCV	Gross Calorific Value
G-EHSG	IFC General Environmental Health and Safety Guideline
GJ	Gigajoule
GPS	Global Positioning System
GRP	Glass Fiber Reinforced Piping
GWh	Gigawatt hour
GSO	Grid System Operator
HART	Highway Addressable Remote Transducer
HAZOP	Hazard and Operability Study
HCSD	High Concentration Slurry / Solids Disposal
HDPE	High Density Polyurethane
HHV	Higher Heating Value
HMI	Human Machine Interface
HRC	High Ruption Capacity Fuse
HV	High Voltage
HVAC	Heating, Ventilation, Air Conditioning
Hz	Hertz
I&C	Instrumentation and Control
IDF	Induced Draught Fan
IOD	Initial Operation Date
IP	Intermediate Pressure
IPL	Independent Protection Layer
IPP	Independent Power Producer
IR	Infrared
kV	Kilovolt
kW	Kilowatt
LAN	Local Area Network
LCC	Local Control Center
LCV	Lower Calorific Value
HSD	High Speed Diesel
LHV	Lower Heating Value
LIE	Local Instrument Enclosure
LIR	Local Instrument Rack
LP	Low Pressure
LV	Low Voltage
LVS	Large Video Screen
MCC	Motor Control Center
MCL	Maximum Continuous Load
MCR	Maximum Continuous Rating
MCWP	Main Cooling Water Pump
MDBFP	Motor Driven Boiler Feed Pump
MLSD	Land Survey Datum
MNCL	Minimum Continuous Load
MNCR	Minimum Continuous Rating
MOV	Motor Operated Valve
MV	Medium Voltage
MVA	Megavolt Ampere
MVAR	Megavolt Ampere Reactive
MWh	Megawatt hour

भारत हेवी इलेक्ट्रिकल्स लि. / BHEL
BHEL
अंतर्राष्ट्रीय परिचालन प्रभाग
INTERNATIONAL OPERATIONS DIVISION
नई दिल्ली / New Delhi-3 (India)

Bangladesh-India Friendship Power Company (Pvt) Ltd.
BIFPCL

MWQCS	Marine Water Quality Criteria and Standards
NCC	Network Control Center
NDE	Non Destructive Examination
NFPA	National Fire Protection Association
NLDC	National Load Dispatch Centre
NO_x	Nitrogen Oxides
NOR	Notice of Readiness
NPSH	Net Positive Suction Head
NRV	Non Return Valve
O&M	Operation and Maintenance
OEM	Original Equipment Manufacturer
OHL	Over head line
P&I	Piping and Instrumentation
P&ID	Piping and Instrumentation Diagram
PA	Public Address
PABX	Private Automatic Branch Telephone Exchange
PA	Primary Air
PADO	Plant Performance Analysis, Diagnosis and Optimization System
PAF	Primary Air Fan
PC	Pulverized Coal
PCDD	Polychlorinated Dibenzodioxins
PCDF	Polychlorinated Dibenzofurans
PF	Performance Fuel
PLC	Programmable Logic Controller
PPA	Power Purchase Agreement
PQR	Procedure Qualification Record
PSS	Power System Stabiliser
PVC	Polyvinyl Chloride
PWD	Public Works Department
PWHT	Post welding heat treatment
QA	Quality Assurance
RAPH	Regenerative Air Preheater
RC	Reinforced Concrete
RSC	Reference Site Conditions
SA	Secondary Air
SAH	Steam Air Heater
SCADA	Supervisory Control and Data Acquisition
SCAPH	Steam Coil Air Heater
SCS	Substation Control System
SER	Sequence of Events Recording
SG	Steam Generator
SI	Soil Investigation
SIL	Safety Integrity Level
SO_2	Sulphur Dioxide
SOE	Sequence of Events
SSC	Summer Site Conditions
ST	Steam Turbine
STG	Steam Turbine Generator

भारत हेवी इलेक्ट्रिकल्स लि. / BHEL
अंतर्राष्ट्रीय परिचालन प्रभाग
INTERNATIONAL OPERATIONS DIVISION

Bangladesh-India Friendship Power Company (Pvt) Ltd.
BIFPCL

SWAS	Steam and water analyses system
TCS	Technical Comment Sheet
TDS	Total dissolved solids
TEFC	Totally enclosed Fan cooled
TG	Turbine Generator
TIG	Tungsten Inert Gas
TLA	Three-Letter Abbreviation
TMC	Turbine Maximum Capacity
TMCR	Turbine Maximum Continuous Rating
TSCS	Turbine Stress Control System
TSI	Turbine Supervisory Instruments
UHF	Ultra High Frequency
UV	Ultraviolet
VDU	Video Display Unit
VT	Voltage Transformer
VMS	Vibration monitoring system
VWO	Valves Wide Open
WSC	Winter Site Conditions
WPS	Welding procedure specification
WTP	Water Treatment Plant
WWD	Weather Working Days
WWTP	Waste Water Treatment Plant

अंतर्राष्ट्रीय परिचालन प्रभाग
INTERNATIONAL OPERATIONS DIVISION
New Delhi
Bangladesh-India Friendship Power Company (Pvt) Ltd.
BIFPCL

B0.9 Technical Schedules

The following technical schedules comprise part of this specification. The data and requirements specified in the respective forms are to be adhered to and the missing data of forms are to be completely filled in. The completed technical schedules are to be submitted with the Bid.

B0 Technical Schedule General
B0 Sub-supplier List

ANNEXURE IX: SEA WORTHY PACKING

1.0 Purpose

The purpose of this specification is to describe minimum packing requirements for the different items/equipment for all export Project and also to define marking and shipping requirements during transportation by ship, road and air for all export jobs.

2.0 SCOPE

For export jobs, sea worthy packing capable of performing all necessary functions like prevention of damage to the contents, sufficient to support frequent handling and lengthy period of outdoor storage in adverse weather conditions are required. Workmanship and materials used shall be of high standard meeting the technical requirements and in accordance with best commercial export packing practices. Vendor shall be responsible for sea worthy export packing, however it shall meet the minimum requirements specified herein. Equivalent or better packing methods may be deployed subject to approval of the BHEL/Purchaser. Vendor shall submit the packing procedure for its equivalent for purchaser's approval during detailed engineering.

The scope this specification is to define VENDOR's responsibilities in terms of:

- Preservation of the GOODS/items/equipments before packing.
- Packing of the GOODS for road, rail, sea and/or air transportation to desired destination i.e. project site
- Making cases/crates
- Chemical Treatment/Fumigation before packing to prevent fungus, damage due to termite, borer, rats, etc.
- Marking of cases/crates.
- Other Services required.

3.0 Application

This specification is applicable to all the goods to be transported to project site and requires to be in transit for longer duration. *However, for "Misc cable erection items", "Fire sealing system" & "Exothermic welding material", the packing requirements shall be as per the procurement specification.*

4.0 Definitions

"BHEL" : Main EPC vendor

"OWNER" : Customer for a particular export project.

"VENDOR" : Company(ies)/VENDOR(s) to whom the BHEL has placed Purchase Order for GOODS/ items/system/package.

"GOODS": means all or part of the articles, material, equipment supplies including technical documentation, as described in the Purchase Order, to be supplied by VENDOR.

"PACKER": Packaging Company to whom VENDOR intends to sub-contract the packing in case they do not have own packing capability/facilities .

"FREIGHT FORWARDER" : Means the Company responsible for performing freight forwarding activities.

5. General Information

The following requirements are intended as minimum requirements, and compliance to these requirements in no way absolves or relieves VENDOR of any responsibility or obligation outlined in the Purchase Order. In all circumstances, the packing will be designed and constructed in order to support GOODS during transportation as well as to prevent the Goods from damage due to impact, extreme climatic conditions, sun and rain. It must be ensured that the delivery of the GOODS to the jobsite by sea, road or air, in good condition.

GOODS shall be export packed in compliance with the best-established practices for international projects, in accordance with the following instructions. In the event of any conflict between these specified requirement and the established practices, specification requirement shall govern.

Due to climatic conditions and the complex transport operation(s), it is essential that protection and packing is of the highest standard. Packing means to efficiently protect the GOODS during the total transport operation; from the moment they leave the factory until they are delivered to the jobsite, including handling operations (loading/unloading) and storage.

When VENDOR do not have packing capabilities/facilities of their own and therefore intends to sub-contract, VENDOR have to inform BHEL/Purchaser of the name and address of proposed PACKER(s) for approval.

6.0 Criteria for Selection of Packaging

Packages are to be made according to categories, described in articles 8.1 to 8.5, depending on the type of materials, their fragility and size.

These categories have been established for the protection of equipment and material during multi-mode transports, i.e.: combination of overland and sea transport; containerization, air transportation.

In a general manner, the GOODS have to be packed in such a way that crates, bundles, pallets can be stored into General Purpose containers, wherever possible.

If VENDOR has any doubt about the correct method of protection or packing, he should contact BHEL/Purchaser in order to mutually agree on the adequate type of packing to be used.

Materials can be classified in following categories

- Hazardous Material
- Non-Hazardous Material
-

Further to above categorisation, non-hazardous materials can be sub- categorised for selection of packing.

6.1 Hazardous Materials

Though handling of hazardous material may is not applicable in the scope of this specification. All hazardous material must be packed in adherence to the detailed requirement relating to packing, marking and labelling set out in the most recent report of the Board's Standard Advisory Committee on the Carriage of Dangerous Goods in Ships for sea freight, and the Restricted Articles Regulations, laid down by the International Air Transport Association for airfreight.

6.2 Non-Hazardous GOODS

The scope of this specification is to provide necessary guidelines for packing for power plant equipment, components, Pipings & Valves, Fittings, other structural items, electrical items, spare parts and erection materials. The procedure is defined in subsequent paragraphs in details in clause no. 8.0.

7. 0 Marking Instructions & Despatch details, Storage Code

7.1 Marking Instructions & despatch details

Packages and crates will be marked with indelible black paint, resistant to seawater. Marking must be perfectly legible.

The shipping marks, which will be as per fig-13, shall be stencilled on two sides and one end in clear characters at least 5 centimetres high (where crate size permits, otherwise use optimum size for each package dimension).

When the GOODS are to be shipped in containers then marking may be stencilled on one end only. However, packages must be stowed in a manner that shows these marks.

Crates containing fragile articles must be packed with special precaution against risk of breakage and must be stencilled on all sides "FRAGILE - HANDLE WITH CARE". Where crates are not to be overturned, VENDOR must show on the crates, clear and readily visible identification as per fig-12, to ensure they are kept in the correct position.

Packages/equipment of 2,000 kg or more must be marked with slinging points on all sides, in addition to the centre of gravity marks.

Number packages consecutively i.e. 1 of 10, 2 of 10, etc. Do not duplicate package numbers. VENDOR is responsible for any loss or damage caused by incorrect marking.

All cases/crates shall also be marked with the appropriate international standard graphic symbols for handling as shown in Fig 12.

As a minimum, all cases/crates are to be marked clearly on all four sides with:

- "HANDLE WITH CARE"
- "RIGHT SIDE UP"
- **"KEEP DRY"**

In the case of packages with a single gross weight totalling 2,000 kg and/or a height of more than 1m, the centre of gravity shall be clearly marked with the symbol on two adjoining sides. For all items of equipment with an eccentric centre of gravity this symbol shall be marked at the bottom, side and top of the package.

The slinging and lashing points shall be marked with a chain symbol.

When packing in cases/crates, these packages shall also have metal corners at the slinging points. (Fig-11)

External front and rear sides of the boxes to be planed for writing instructions.

Dispatch details such as consigner/consignee address, contract and case details, country of origin, port of delivery, stacking instructions shall be written on one side of the boxes. An anodized aluminum plate as per details and specifications given in fig-13 shall be provided on one side of the boxes.

One copy of packing slip wrapped in polyethylene bag covered with aluminum packing slip holder to be nailed on the external surface of the box. One more copy of the packing slip wrapped in polyethylene bag is to be kept inside the box at the pertinent place.

7.2 Storage Code

The type of storage required is required to be specified, it will be shown on each packaging in **RED colour.**

X Crates or packages to be stored outdoor without covers
XX Crates or packages to be stored under tarpaulin
XXX Crates or packages to be stored in covered or enclosed premises
XXXX Crates or packages which must be stored in air-conditioned premises

8.0 GUIDELINES FOR PACKING GOODS

8.1 In the subsequent paragraphs details of different types of packings for different types of GOODS are defined. Vendor shall make packing details/procedure based on the guidelines and submit for approval.

8.1.1 Packing for Pipe, Fittings, Flanges and Valves, Structural Steel

Particular attention should be brought to pipe, fittings, flanges, valves and structural steel. Packing categories for piping and fittings will differ according to the diameter and wall thickness of these products. VENDOR shall comply with the following established practice.

IMPORTANT NOTE:
Depending on the project schedule and availability of ocean vessels, the piping and structural steel may be shipped in containers. In this event, VENDOR has to arrange the packages in such a way it allows the stuffing into Open Top in gauge containers.

8.1.2 Pipe

Where practicable, pipe lengths shall be limited to 11.8 meters.
All pipes **2"** included and below shall be packed in crates. All pipes to be capped and ends sealed with waterproof tape.

Pipes over 2" up to 6", shall be bundled and banded in bundles of uniform length. Bundling is carried out with U-IRON or traversal planks, joined with threaded connecting rods with locknuts. Quantities and strapping positions depend on the lengths, with a 120 cm spacing to prevent distortion. Bundle weight shall not exceed 2,000 kg. All pipes are to be capped and ends sealed with waterproof tape (tape is not necessary if end caps are of the pre-shrunk or self-sealing type).

Pipes larger than 6" shall be shipped as single lengths with the ends capped. End caps are to be of the recessed type to enable the use of soft faced hooks, but still completely sealing the end and also protecting the weld.
All stainless steel piping must be packed separately in wooden crates. Any banding of bundles is to be with the same material.

8.1.3 Pipe Fittings, Flanges and Valves

All pipe fittings, flanges and valves up to 6", are to be packed in cases/crates. For items over 6", these may be fixed securely to a pallet base and enclosed in a crate, for protection. Where valves have actuators attached, rigidity must be ensured for the valve and actuator. The vulnerable parts of the actuator are to be completely protected within a wooden crate.

All stainless steel fittings, flanges and valves of all sizes, must be packed separately in wooden crates. Any strapping is to be with the same material.

8.1.4 Structural Steel

Structural Steel, reinforcing rods, bars, etc., should be packed in bundles of uniform length. Refer to articles 8.1.2, for strapping requirements. Bundle weight not normally to exceed 2,000 kg. Fabricated structures and structural steelwork, etc, should be bundled and packed using wooden beams and long bolting to secure the load.

8.2 Bundling – Packing Category I

8.2.1 Type of Equipment

Equipment which is not subject to damage by corrosion or mechanical effect, i.e. pipes, piping, structural steel.

Packing category I

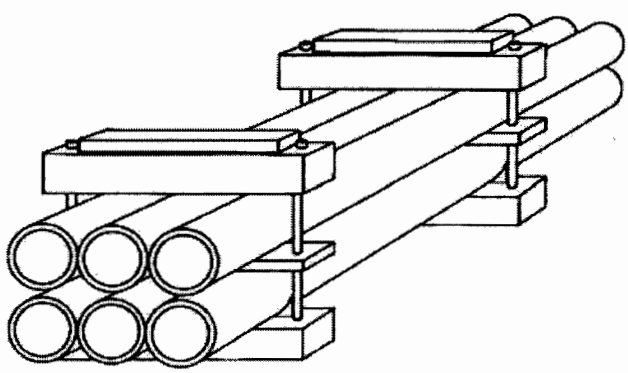

Bundling by U-shaped iron – packing category I A

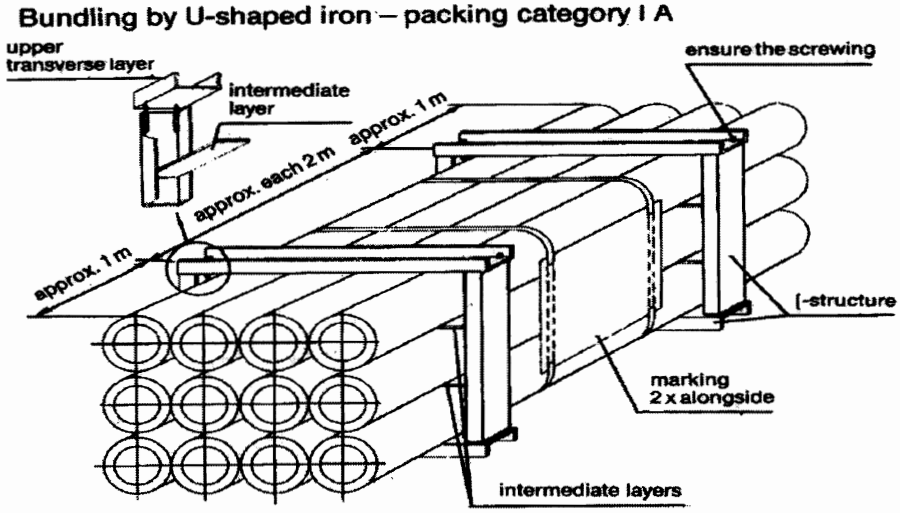

8.2.2 Type of Construction

Bundling has to be effected

- By squared timber and threaded rods.
- With an intermediate layer (threaded on tightening bolts) according to the weight of the package.
- Wedge-shaped timbers must be added at the outer points of lower layer.
- Between the bolts a spacer must be nailed.
- The bolts must be secured (e.g. by locking nut).
- If single parts could protrude, an appropriate protection must be installed (flat iron or plates).
- Bundling with steel straps or PVC straps is not accepted.

8.3 Skids, Square Timber Constructions, Casings – Packing (Category II)

8.3.1 Type of Equipment

Voluminous apparatus, tanks and/or heavy pieces those are not vulnerable to mechanical or corrosive effects.

8.3.2 Type of Construction

- The construction skid can be made of wood or of metal.
- The fastening of the packages on the skid will be made by steel straps (flat iron) which have to be elastically lined, non-slip and securely bolted onto the skids.
- Flange openings have to be closed with gaskets and blind flanges or, if necessary, provided with cover.
- Skid constructions may not be less than the dimensions of the package in length or in width.
- Tanks and apparatus with their own support cradles must be supplied with an anti-slip lining.

PACKING CATEGORY-II

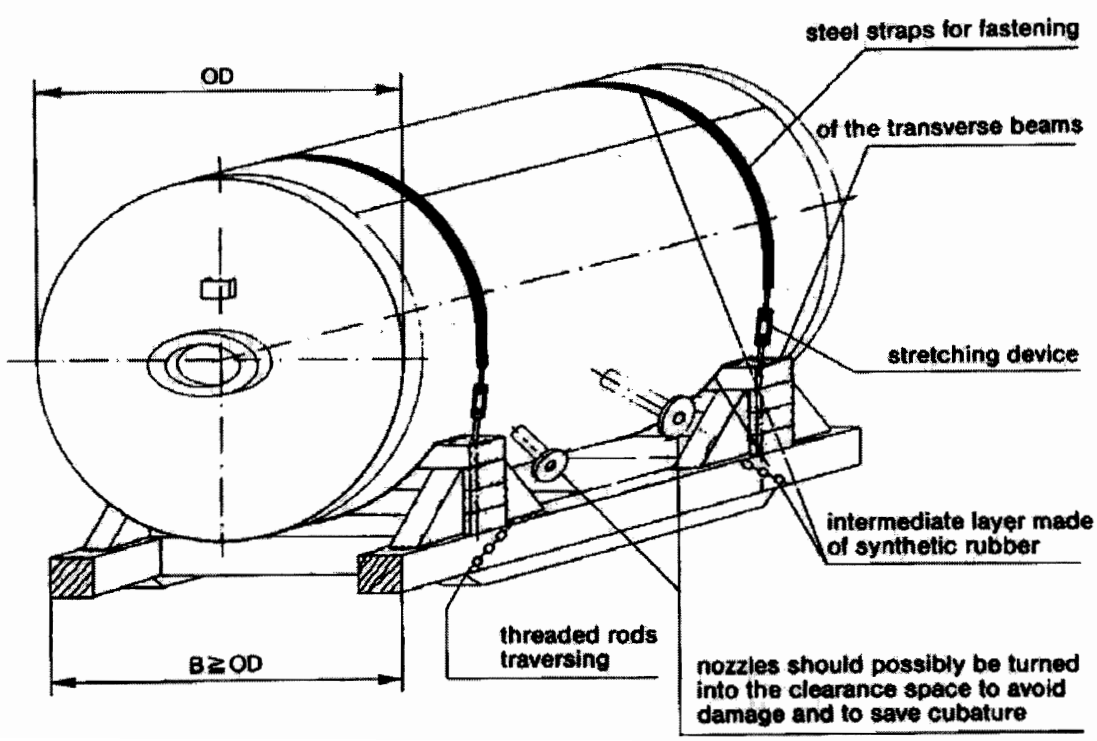

8.4 Packing of GOODS in Wooden Crates/Cases/Boxes

The construction of wooden crate/cases/boxes shall be as per the details indicated in clause 9.0 & Fig 1 to 11. Details indicated in the sketches for different categories Packing crates/boxes are only for a typical equipment considered for illustration.

8.4.1 Packing Category III

8.4.1.1 Type of Equipment

Fabricated equipment, which cannot be transported on cradles; frame-works, prefabricated piping and fittings, mechanical and electrical assemblies. *This type of packing is recommended where many parts of the equipment/component/assembly are not protruding out.*

8.4.1.2 Type of Construction

The equipment must be safely fastened to the bottom with bolts, possibly by the runners or to be spread in such a manner that no protruding parts are possible. For parts, sensitive to rainwater and/or debris, a protection has to be made by a foil cap.

If it is possible that single part could protrude through the front/back side wall, they shall be closed completely. The marking of the package shall be done on plywood plates at the prescribed sides.

Packing Category III

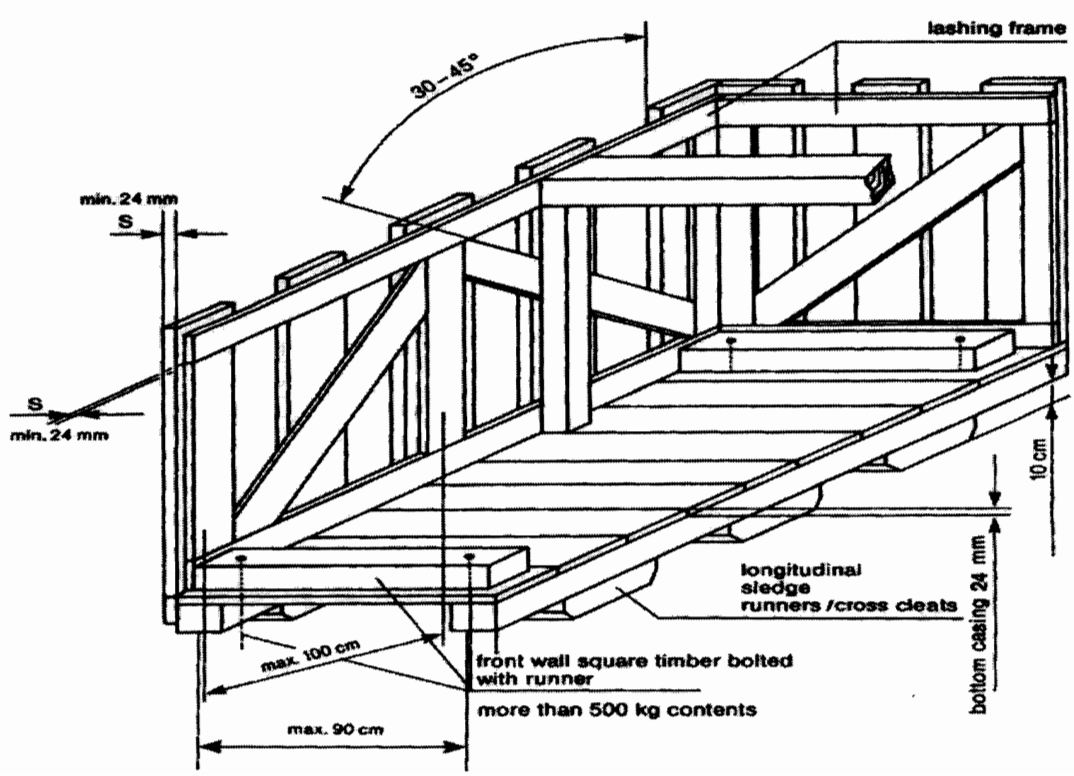

8.4.2 Cases with Lining – Packing Category IV

8.4.2.1 Type of Equipment

Recommended for equipment and mechanical parts Equipment sensitive to mechanical damage or parts and components that are particularly at risk of theft or loss; pumps, elbows, flanges, fittings, tools, erection materials, etc.

8.4.2.2 Type of Construction

The same type of construction as article 8.4.1.2, but with all sides completely boarded without space between the boards. Sides to be provided with waterproof lining; fabric-reinforced waterproof tar paper or polyethylene-foils resistant to ultraviolet rays can be used. Polyethylene-foil shall be fixed under the lid cover to avoid penetration of water. At weights of more than 500 kg the longitudinal runner must be bolted to the front all square timber. For ventilation inside the case, an opening in the waterproof lining must be placed between the diagonal battens and diagonal joists.

Packing Category IV

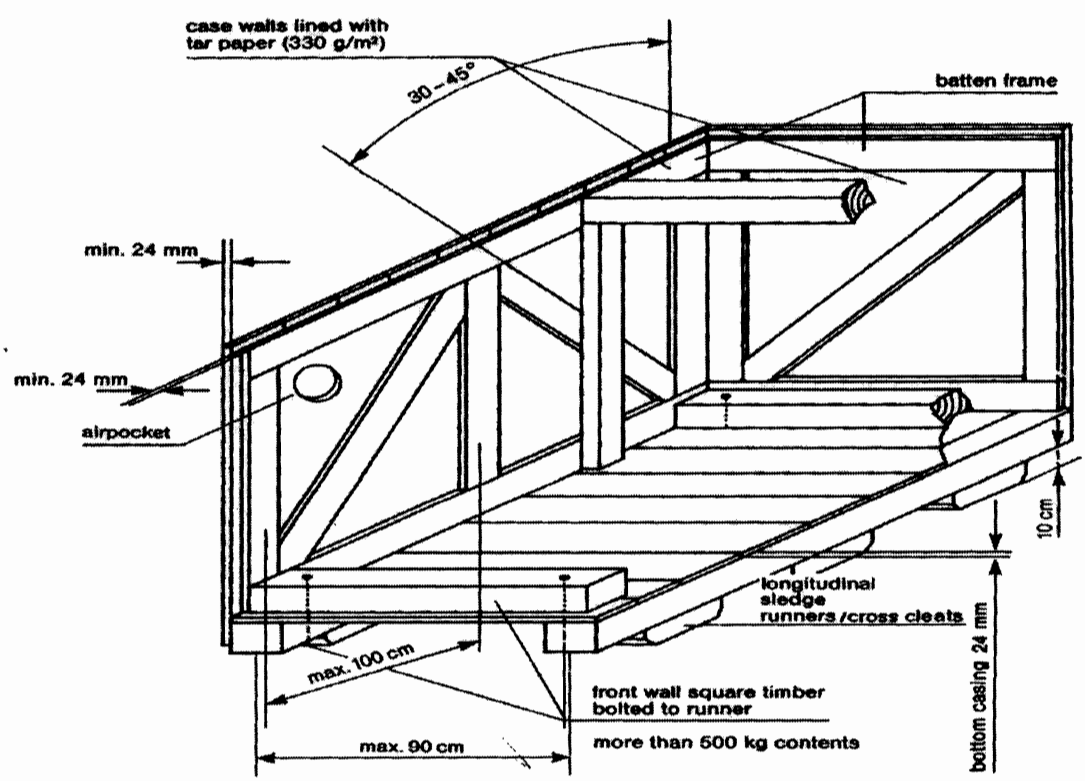

8.4.3 Cases with Alternative Surface Materials

8.4.3.1 Plywood Box – Packing Category IV A

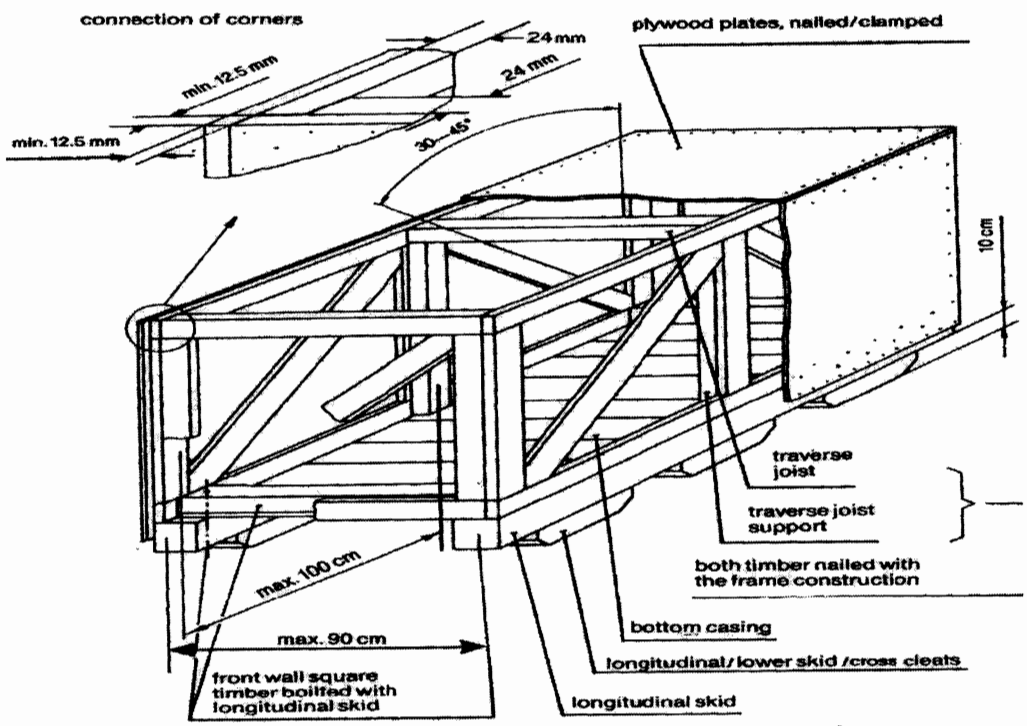

Case constructed of 5 layers of watertight, glued plywood with a total thickness of 12.5 mm. The frame must be constructed from minimum 24 mm timber or as per guide lines given above against clause 8.0, Fig 1 to 11 and must be suitable for the weight and nature of the parts to be packed. Planed square timber must be bolted with longitudinal skid and covered with diagonal joists. If applicable, construction of the cover and sides is to include diagonal bracing. Covers consisting of several layers of plywood are to be sealed with durable elastic putty or additional water-resistant sheets to be fixed.

8.4.4 Case with Barrier Material – Polyethylene Foil – Packing Category V

8.4.4.1 Type of Equipment

Sensitive equipment, simple electrical equipment, insulation materials, fire-resistant materials, with non-corrosion- guarantee for a period up to twelve (12) months.

8.4.4.2 Type of Construction

Preservation by welding in polyethylene-foil with addition of desiccants and if necessary, application of non-corrosive contact agents, otherwise, type of construction as indicated in article 8.4.2.2.
Additional marking:

- Case with desiccants.

8.4.5 Case with Barrier Material – Aluminium Compound Foil – Packing Category VI

8.4.5.1 Type of Equipment

Electrical equipment such as, switchboards, electric motors, sensitive equipment, with non-corrosion guarantee, for a period up to twelve (12) months.

8.4.5.2 Type of Construction

Type of construction as indicated in article 8.4.2.2. Preservation by sealing an aluminium compound foil, with the addition of desiccants. Humidity indicators, if required and installed in the barrier wrapping, shall allow easy control from the outside.

Additional marking:

- Case with desiccants.

Packing Category V/VI

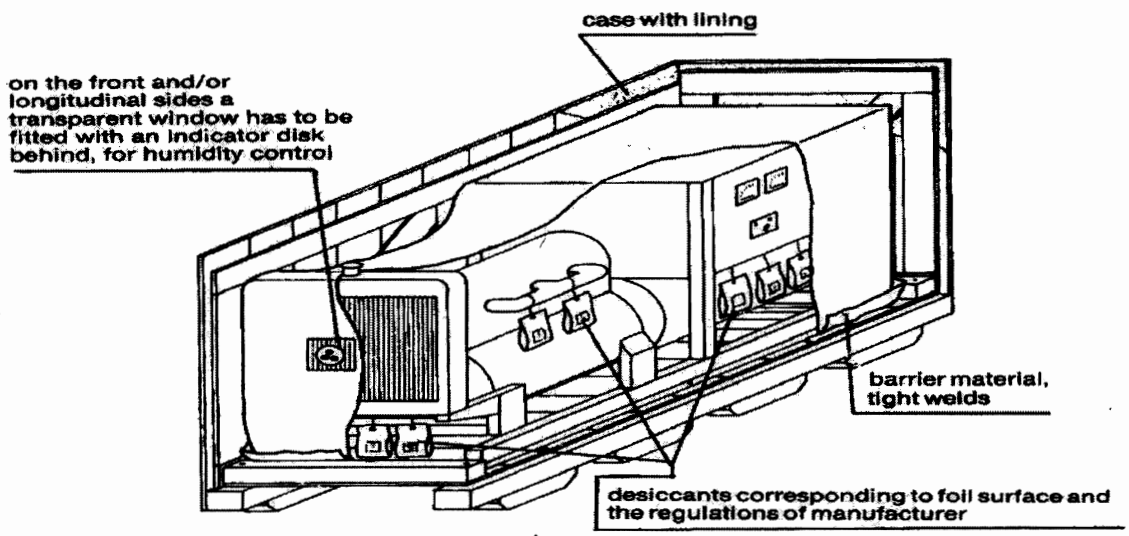

8.4.6 Double Case – Packing Category VII

8.4.6.1 Type of Equipment

GOODS which are of high sensitivity to shock, impact and vibration, for instance, special electrical equipment like computers, switchboards, laboratory instruments

8.4.6.2 Type of Construction

Case construction as indicated in article 8.4.2.2, with additional floating inner packing (case-in-case principle), padding corresponding to weight and sensitiveness. Preservation by sealing in aluminium compound foil with the addition of desiccants. The inner case has to be made of plywood or equivalent material with a thickness of 8-12 mm, depending on the weight of the GOODS to be packed. The inner buckles and/or frame borders have to be dimensioned so that the full stability of the inside case will be reached and no twisting is possible. The inner sides of the inside case will be lined with bituminous kraft paper on all sides (except bottom).

8.4.7 Cable Drum – Packing Category VIII

8.4.7.1 Type of Equipment

All type of cables, wires, ropes, hoses.

8.4.7.2 Type of Construction

For all type of cables refer clause no. 11.1. For other items (wires, ropes, hoses) new or practically new drums are to be used. Planking of the e drums by use of boards, thickness minimum 20 mm, with additional double steel strapping, nailed, and carefully preserved/ protected cable ends prior to packing.

8.4.8 Hazardous Materials – Packing Category IX

8.4.8.1 Type of Equipment

Hazardous materials according to the law are explosives, compressed gases, liquefied gases dissolved under pressure or deeply refrigerated, flammable liquids, flammable solids: substances liable to spontaneous combustion; substances which, on contact with water, emit flammable gases, oxidizing substances, organic peroxides, poisonous (toxic) and infectious substances; radioactive materials, corrosives, miscellaneous dangerous goods.

8.4.8.2 Type of Construction

Hazardous materials shall always be packed and documented separately from any other material. Selection of packaging materials, execution of packing and marking as well as documentation shall always be in compliance with the applicable laws and regulations. Any certificates required for transportation or for authorities to be supplied before shipment of the GOODS.

8.4.9 Wooden Floor as a Transport Support – Packing Category X

8.4.9.1 Type of Equipment

Any materials to be stuffed in containers or on flat racks and that are not stowed on standard pallets or otherwise suitably packed

8.4.9.2 Type of Construction

- Longitudinal internal square timbers bolted to the front wall runners, longitudinal skid.
- Maximum distance between longitudinal runners 90 cm (middle to middle of the runner).
- Full boarding of the floor.
- Attaching of lifting lugs and/or iron ropes for lifting/pulling the units off the transport equipment.
- If applicable, preservation of the equipment by sealing in polyethylene-foil or aluminium compound foil and the addition of desiccants.

8.5 Air Transport Packing

8.5.1 General

Certain types of material may have to be shipped by air from their country of origin. This means of transport will be exceptional, and will be used only:

- For GOODS, which are highly sensitive to shock or vibrations, such as computers, electronic instruments, or those of small dimensions and weight.
- For GOODS urgently required at the module yard(s) and/or jobsite.

8.5.2 Type of Packing

Depending on the goods to be packed, VENDOR may use one of the following types:

- A triple-corrugated cardboard container made with waterproofed glue and a barrier layer of polyethylene on the outsides to keep out humidity.
- Wooden/cardboard packing cases: the wood being used for the framework and base of the cases, waterproofed triple-corrugated cardboard being used for the sides and top. These cases are of the "Bell" type, and used for material of small or medium dimensions.
- For larger dimensions, plywood cases are acceptable. The timber characteristics, cross-sections and thickness will be systematically determined by the nature of the loads to be packed.

8.5.3 Dimensions

In order to optimize the existing transport facilities (passenger or cargo aircraft), the dimensions of:

- Triple-corrugated containers.
- Wooden/cardboard packing cases.
- Plywood cases.

Are to be adapted to pallets used for air transportation.

9.0 <u>Detailed specification for Wooden Crates/Boxes/Cases and other packing materials</u>

9.1 **Technical specification for wood**

The wood shall be Fir, Chir, Silver Oak (Gravillea Robusta), chemically treated mango and Pinewood with moisture content not exceeding 50%. The wood shall have flexural and compressive strength, stiffness, shock absorption and nail retention properties. The wood shall be free from common defects such as warp, bone, twist, knot, crakes, splits, end splits, bend, visible sign of infection and any kind of decay caused by insects or fungus, etc. Surface cracks with maximum depth of 3mm are permissible. A continuous crack of any depth all along the length is not allowed.

9.2 **Chemical Treatment of Wood**:

The wood shall be chemically treated to provide protection against deterioration due to fungi and attack by termites, borers, marine organism and any other kind of infection. It shall be treated only after final processing like cutting, planning, joint grooving, etc.

9.3 **TYPE, DESIGN & DIMENSION OF WOODEN PACKING CASES**:

9.3.1 **PACKING OF EQUIPMENTS**

Various mechanical, electrical and C&I equipment e.g. Pumps, motors, equipment skids, heat exchangers, control panels, switch gears, transformers, etc. shall be wrapped in weather proof packing and then secured in wooden packing cases. The construction of wooden packing cases/crates shall be as per details given below and also given in figure 1 to 11.

9.3.1.1 **Bottom Frame**

The construction of bottom frame shall be as per Fig-2. The No. of slides/runners for bottom frames shall be selected depending upon the weight and overall dimensions of the load to be carried. The equipment shall be secured by fixing their base frame/plate with the help of bolt and nuts etc. to bottom frame of the wooden packing cases/crates. The equipment not provided with base frame/plate like cylindrical vessels, etc to be secured to the bottom frame of the wooden cases with "C" clamps fabricated from steel channels/ angle iron.

9.3.1.2 **TOP FRAME**

The construction of top frame shall be as per fig-3.

9.3.1.3 **END PANELS**

The dimension of the end and lateral panels shall be calculated according to overall dimensions of the items to be packed. Diagonal braces shall be used for packing cases having height exceeding 500mm. Details of bracings shall be as per fig 5 to 9.

9.3.1.4 **Sling Plate**

To facilitate lifting of cases, longitudinal under slide boards shall be fixed. To avoid damage to the box while lifting sling plates shall be provided. Refer fig-11.

9.3.1.5 **Angle Iron Cleats**

Angle iron cleats shall be used for strengthening the joints as indicated in fig-10

9.3.1.6 **Other Requirements**

- The thickness of planks for top, bottom, side and end panels shall be at least 25mm. Planks used for this purpose shall be joined with each other by tongue and groove joint. The groove dimension shall be such that tongue fits tightly into groove to make the joint.
- Runners/slides, traverse bars, etc shall be of single length I.e. without any joint. Planks for sheathing, diagonal bracing etc shall also be of single length up to 2400mm, proper jointing is permitted for planks for sheathing and diagonal bracings.
- Each equipment to be individually covered with double polyethylene petticoat. Sheet thickness of polythene sheet shall not be less than 0.175 mm (175 microns). The sealing shall be such so as not to allow moisture inside.
- The inner surface of 4 sides of shooks shall be nailed with bituminized water proof craft paper. Wherever 2 pieces of kraft paper are used, joint shall have an overlap of minimum 20 mm.
- All the inner sides of the box shall be nailed with bitumen coated HESSIAN POLYTHYLENE KRAFT PAPER. For top frame it shall project on all sides by 100mm and shall be nailed on sides. Wherever 2 pieces of kraft paper are used, joint shall have an overlap of minimum 20 mm.
- For delicate equipment like control panels and switchgears, lighting panels and lighting transformers, suitable cushioning material like rubberised coir (min. 50 mm thick and 100 mm wide) shall be provided on their bottom support and the gap between the panel and casing

shall be filled with rubberized coir with distance between consecutive supports less than 500 mm (ref fig15). For other equipment suitable support from sides of the casing shall be provided.

- Switchgear cubicles, control panels and control desks shall be packed and shipped in separate convenient sections. The components e.g. circuit breakers relays and instruments etc. which are removed from panels for shipping purpose and shall be separately packed and shipped as per packing instructions in clause 10.4.

- Packing case for control panels and switchgear panels shall be finally covered with GI sheet of minimum thickness of 0.4mm.

- Packing cases shall be bound at edges by nailing MS clamps/brackets at sufficient intervals. Further heavier boxes shall be strapped with C clamps (ref fig-4) fabricated from steel channels/angles and lighter boxes shall be strapped with hoop iron strips.

- Silica gel is used for this purpose to protect contents over sufficiently long time from corrosion. Silica gel shall be indicating type confirming to IS-304 (1979) packed in cotton bags placed at different positions inside the packing for absorbing moisture and shall not come into directly contact with equipment/material inside the package. The quantity of silica gel shall be adequate for storage period of one year, however it shall not be less than 4 gm. per ltr. Volume of case subject to minimum 400 gm. Per case.

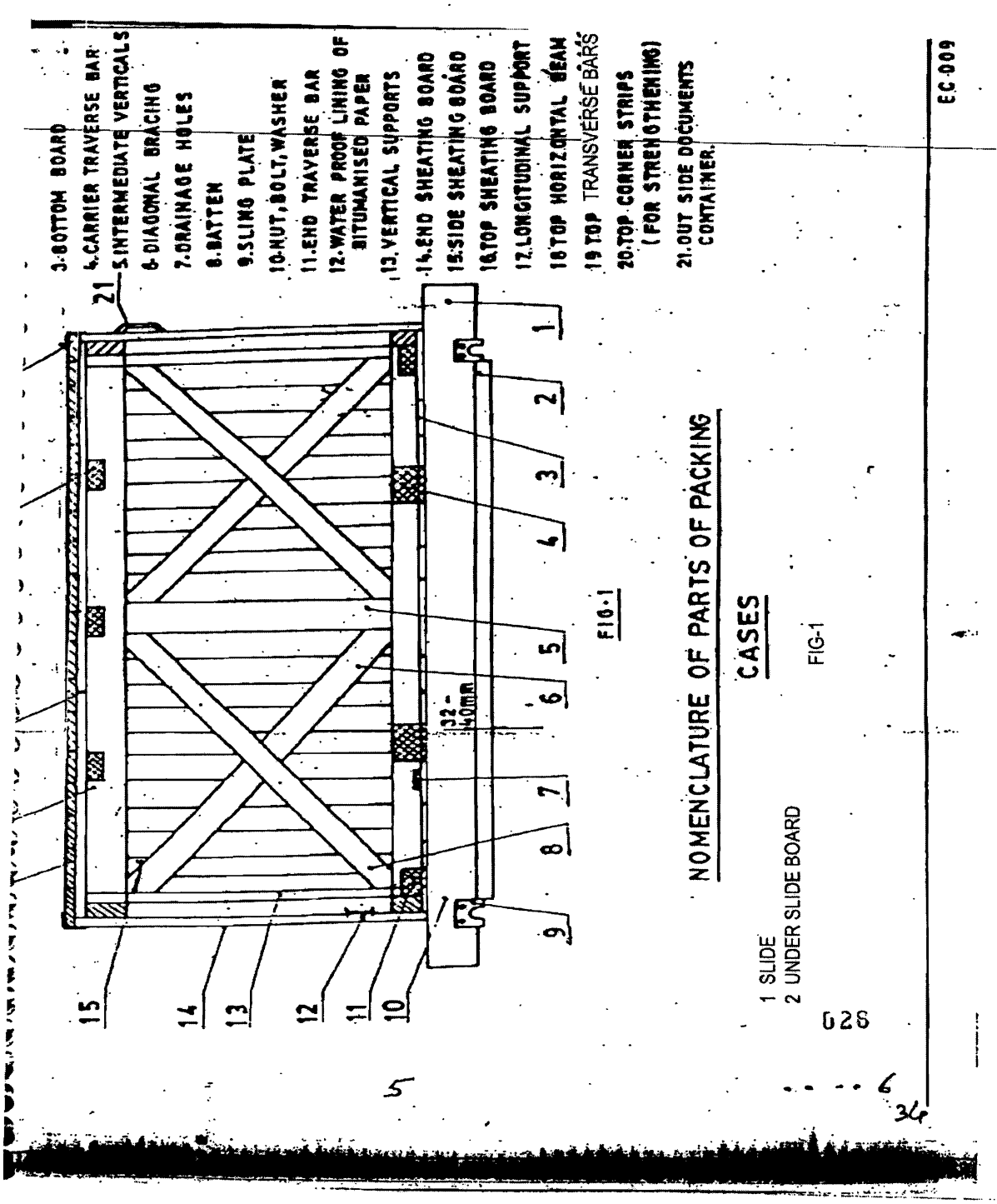
3.BOTTOM BOARD
4.CARRIER TRAVERSE BAR
5.INTERMEDIATE VERTICALS
6.DIAGONAL BRACING
7.DRAINAGE HOLES
8.BATTEN
9.SLING PLATE
10.NUT,BOLT,WASHER
11.END TRAVERSE BAR
12.WATER PROOF LINING OF BITUMANISED PAPER
13.VERTICAL SUPPORTS
14.END SHEATING BOARD
15.SIDE SHEATING BOARD
16.TOP SHEATING BOARD
17.LONGITUDINAL SUPPORT
18.TOP HORIZONTAL BEAM
19.TOP TRANSVERSE BARS
20.TOP CORNER STRIPS (FOR STRENGTHENING)
21.OUT SIDE DOCUMENTS CONTAINER.
32-40mm
FIG-1
NOMENCLATURE OF PARTS OF PACKING
CASES
FIG-1
1 SLIDE
2 UNDER SLIDE BOARD
EC-009

BOTTOM FRAME ARRANGEMENTS

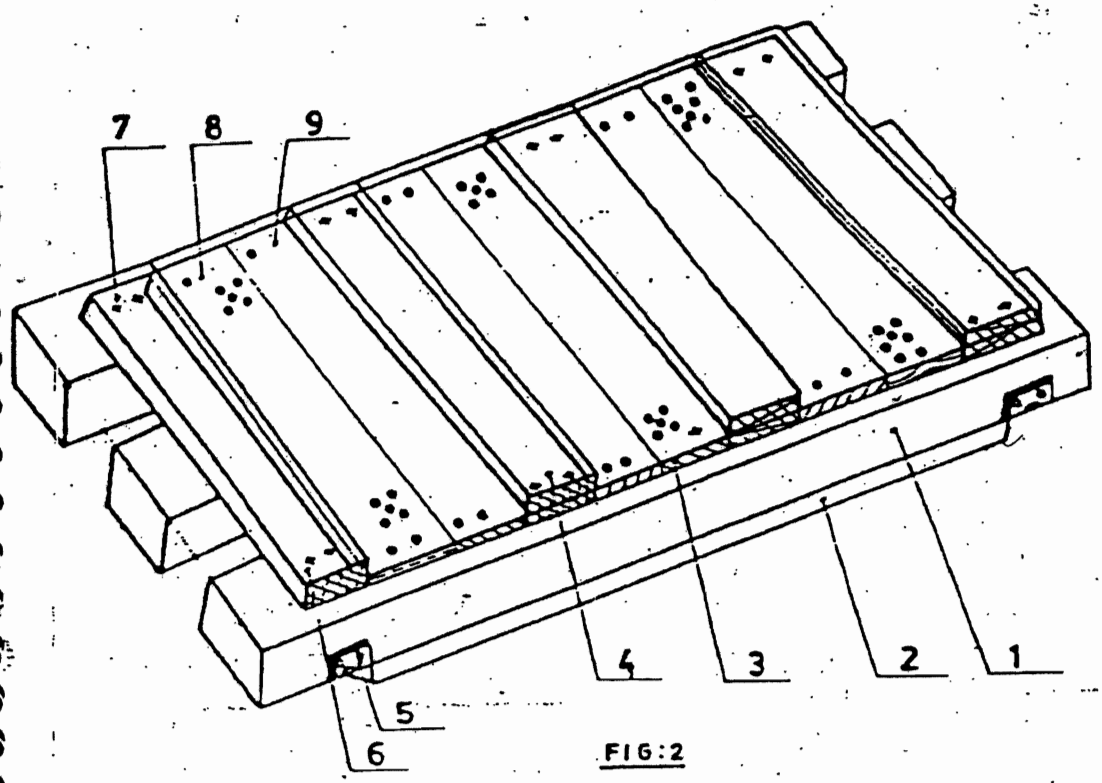

FIG:2

Nos. of slides : Minimum 2 Nos.
For length more than 1800 mm or load more than 1000 kg, Nos. of slides shall be minimum 3 Nos.
For dimensions of slides, refer Table 1
Cross section of end traverse bar; 100 x 100 mm (minimum)

1. SLIDE
2. UNDER SLIDE BOARD
3. BOTTOM BOARD
4. CARRIER TAVERSE BAR
5. SLING PLATE
6. END TRAVERSE BAR
7. BOLT, NUT & WASHER
8. DRAINAGE HOLES
9. NAILS

027

TOP FRAME ARRANGEMENT

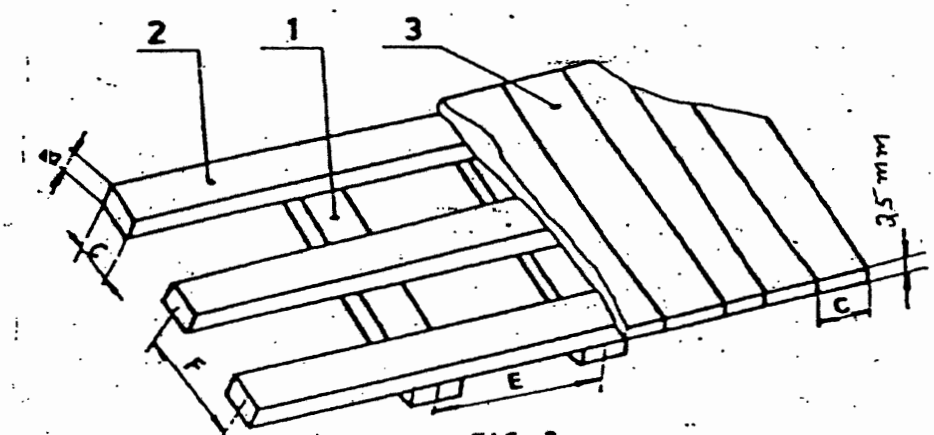

FIG-3

F : 700 t 1000 mm
E : 500 t 900 mm
: 30×100 mm.

1 - Treverse Bars
2 - Horizontal Beams
3 - Top Board

ARRANGEMENT OF C-CLAMPS AROUND CASES

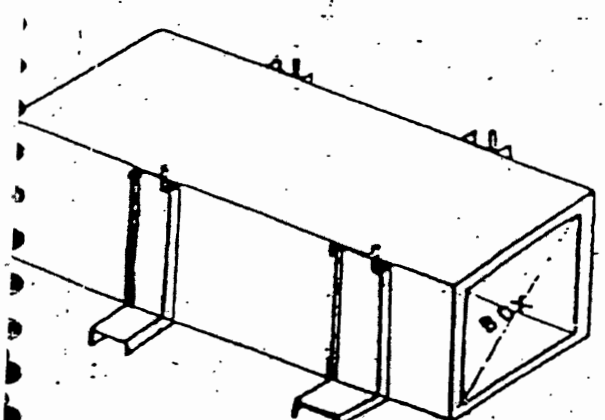

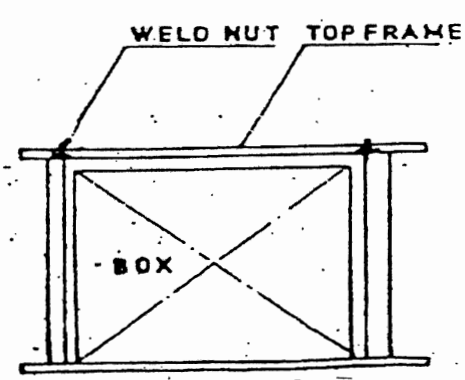

028

ARRANGEMENT OF DIAGONAL BRACING AND HORIZONTAL SUPPORT

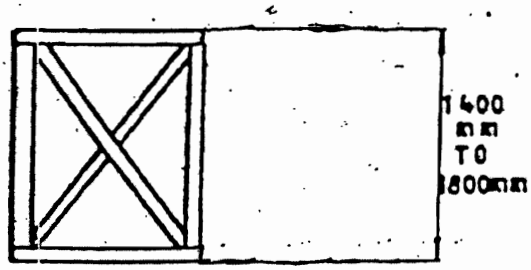

FIG:6

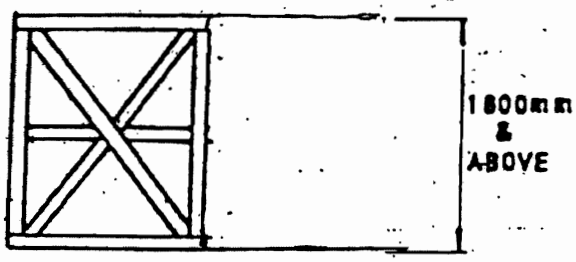

FIG:8

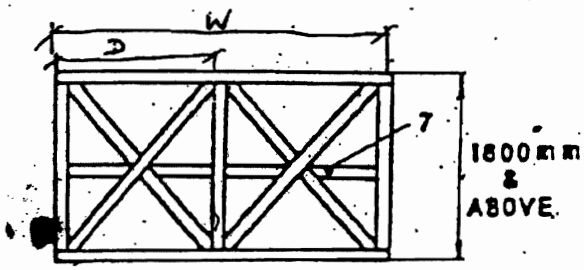

FIG:9

7- Middle Horizontal Support

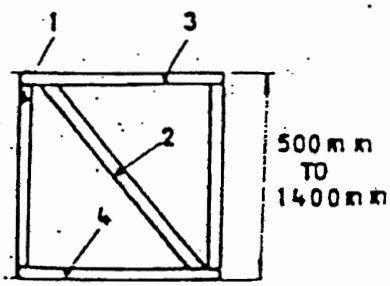

FIG:5

1- Vertical Support

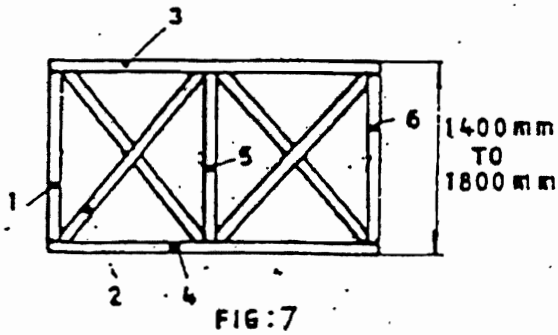

FIG:7

1, 5, 6 - Vertical Support

029

ARRANGEMENT OF PACKING CASE

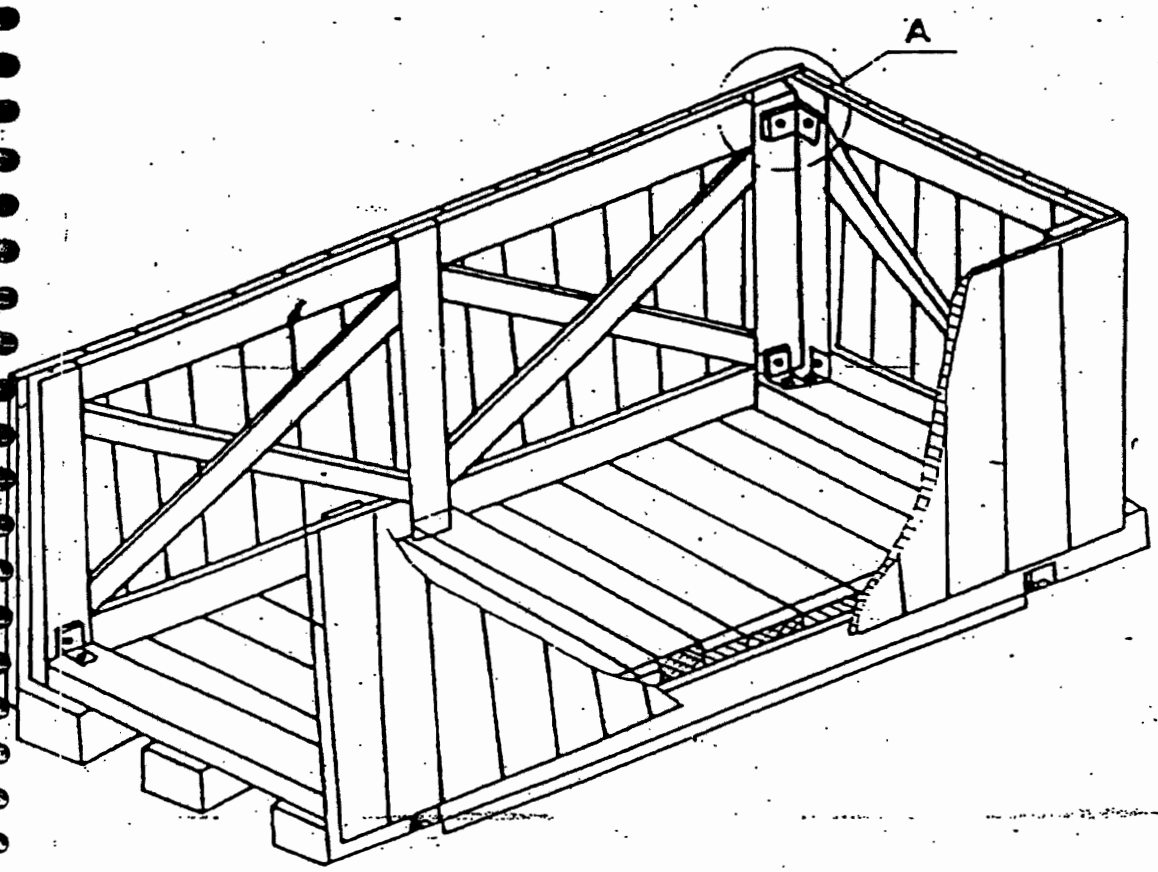

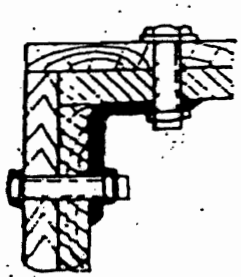

DETAIL-A

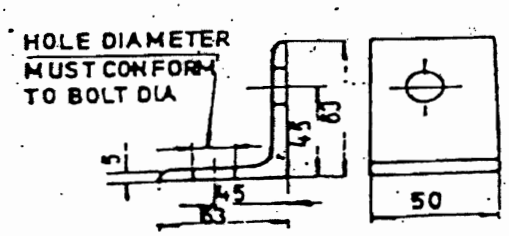

FIG:10

030

ARRANGEMENT OF SLING - PLATE ON CASES

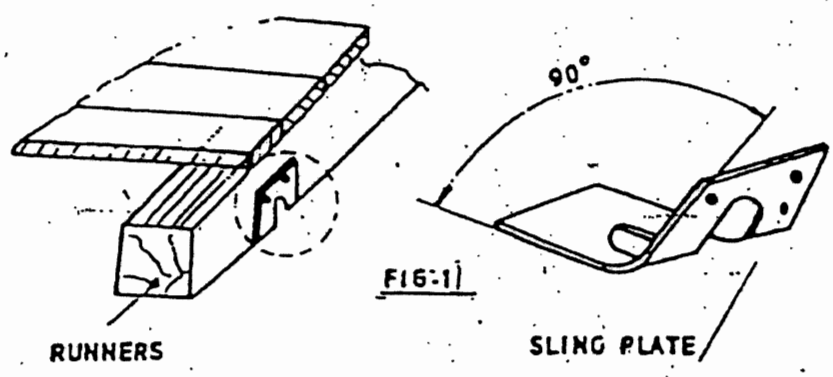

FIG:1

031

TABLE-1

LOADS	LENGTHS OF SLIDES						
	600	800	1000	1200	1300	1500	2000
	Cross section b x c				c b		
500	50 X 100	50 X 100	50 X 100	50 X 100	75 X 100	75 X 100	100 X 100
800	50 X 100	50 X 100	75 X 100	75 X 100	75 X 100	75 X 100	100 X 100
1000	75 X 100	75 X 100	75 X 100	100 X 100	100 X 100	100 X 110	100 X 150
1500	75 X 100	75 X 100	100 X 100	100 X 100	100 X 100	100 X 150	100 X 150
2000	75 X 100	100 X 100	100 X 100	100 X 150	100 X 150	100 X 150	150 X 150
2500	75 X 100	100 X 100	100 X 150	100 X 150	100 X 150	150 X 150	150 X 150
3000	100 X 100	100 X 150	150 X 150	150 X 150	150 X 150	150 X 150	150 X 150

Table-2

End and side panels	Width of the panel "W"	Distance between longitudinal support (Dimension "D")						
		600	800	1000	1200	1400	1600	1800
		Cross section b x c				Item 1 to 7		
Fig- 5 to Fig-9	600 to 1200	30 X 100	30 X 100	30 X 100	30 X 130	30 X 130	30 X 130	30 X 130
	1201 to 1600	30 X 130	30 X 130	30 X 130	30 X 130	30 X 130	30 X 130	30 X 130
	1601 to 2000	30 X 130	30 X 130	30 X 130	30 X 130	30 X 130	30 X 130	30 X 130
	2001 to 3000	30 X 130	30 X 130	30 X 130	30 X 130	30 X 130	30 X 130	40 X 150
	3001 to 4000	40 X 150	40 X 150	40 X 150	40 X 150	40 X 150	40 X 150	40 X 150

INDICATION MARKS ON CASES/BOXES/CRATES

Designation	Symbol	Explanation
Fragile, Handle with care		The symbol should be applied to easily broken cargoes. Cargoes marked with this symbol should be handled carefully and should never be tipped over or slung.
Use no hooks		Any other kind of point load should also be avoided with cargoes marked with this symbol. The symbol does not automatically prohibit the use of the plate hooks used for handling bagged cargo.
Top	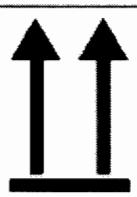	The package must always be transported, handled and stored in such a way that the arrows always point upwards. Rolling, swinging, severe tipping or tumbling or other such handling must be avoided.
Keep away from heat (solar radiation)		Compliance with the symbol is best achieved if the cargo is kept under the coolest possible conditions. In any event, it must be kept away from additional sources of heat. It may be appropriate to enquire whether prevailing or anticipated temperatures may be harmful.
Protect from heat and radioactive sources		Stowage as for the preceding symbol. The cargo must additionally be protected from radioactivity.
Sling here		The symbol indicates merely where the cargo should be slung, but not the method of lifting. If the symbols are applied equidistant from the middle or center of gravity, the package will hang level if the slings are of identical length. If this is not the case, the slinging equipment must be shortened on one side.
Keep dry		Cargo bearing this symbol must be protected from excessive humidity and must accordingly be stored under cover. If particularly large or bulky packages cannot be stored in warehouses or sheds, they must be carefully covered with tarpaulins.

Center of gravity		This symbol is intended to provide a clear indication of the position of the center of gravity. To be meaningful, this symbol should only be used where the center of gravity is not central. The meaning is unambiguous if the symbol is applied onto two upright surfaces at right angles to each other.
No hand truck here		The absence of this symbol on packages amounts to permission to use a hand truck on them.
Stacking limitation		The maximum stacking load must be stated as "... kg max.". Since such marking is sensible only on packages with little loading capacity, cargo bearing this symbol should be stowed in the uppermost layer.
Clamp here		Stating that the package may be clamped at the indicated point is logically equivalent to a prohibition of clamping anywhere else.
Temperature limitations		According to regulations, the symbol should either be provided with the suffix "...°C" for a specific temperature or, in the case of a temperature range, with an upper ("...°C max.") and lower ("...°C min.") temperature limit. The corresponding temperatures or temperature limits should also be noted on the consignment note.
Do not use forklift truck here		This symbol should only be applied to the sides where the forklift truck cannot be used. Absence of the symbol on other sides of the package amounts to permission to use forklift trucks on these sides.
Electrostatic sensitive device		Contact with packages bearing this symbol should be avoided at low levels of relative humidity, especially if insulating footwear is being worn or the ground/floor is nonconductive. Low levels of relative humidity must in particular be expected on hot, dry summer days and very cold winter days.

Do not destroy barrier		A barrier layer which is (virtually) impermeable to water vapor and contains desiccants for corrosion protection is located beneath the outer packaging. This protection will be ineffective if the barrier layer is damaged. Since the symbol has not yet been approved by the ISO, puncturing of the outer shell must in particular be avoided for any packages bearing the words "Packed with desiccants".
Tear off here		This symbol is intended only for the receiver.

FIG-12

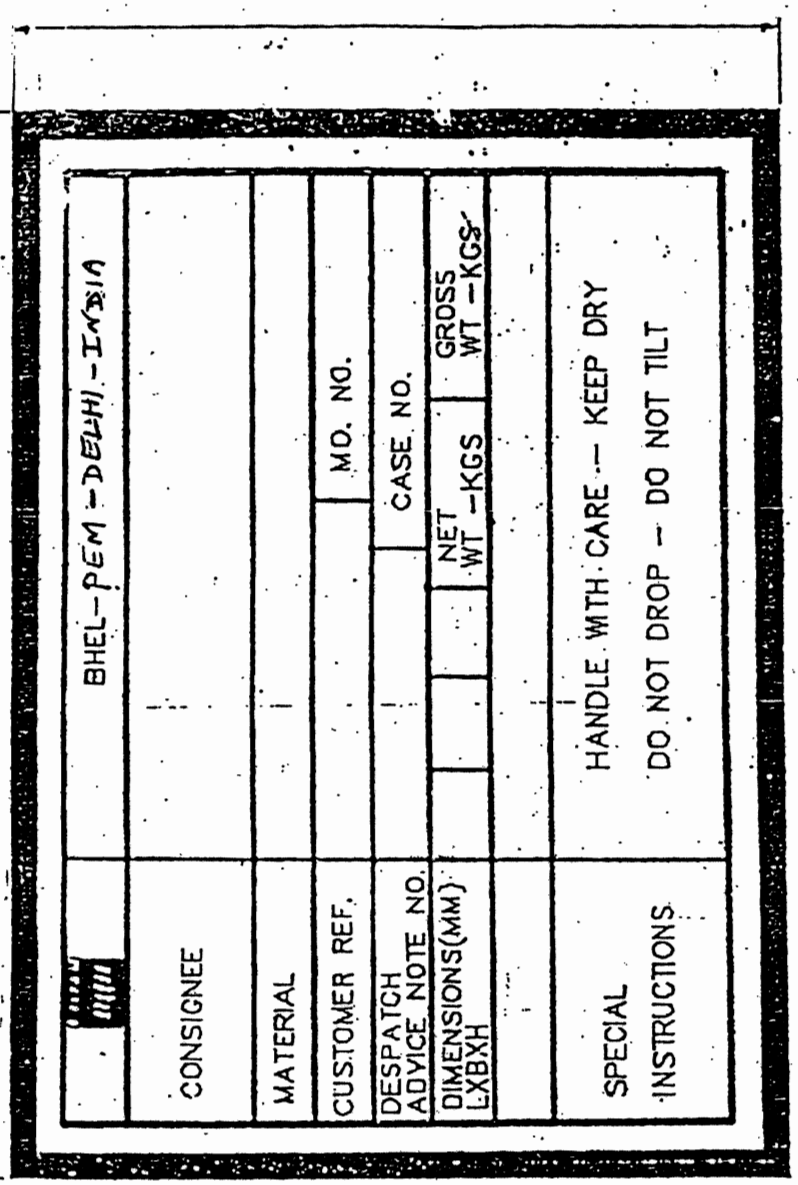

FIG-13: MARKING PLATE

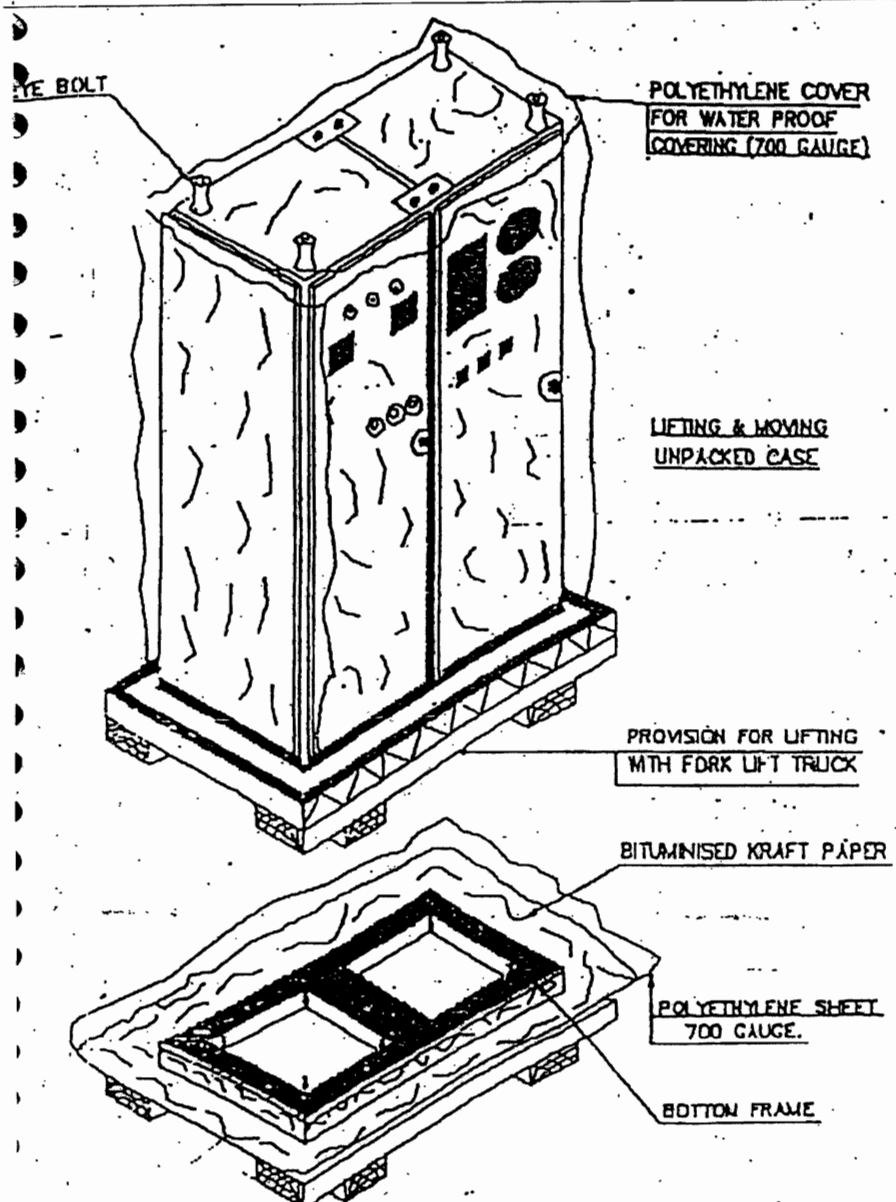

FIGURE-14

036

Sht 16 of 17

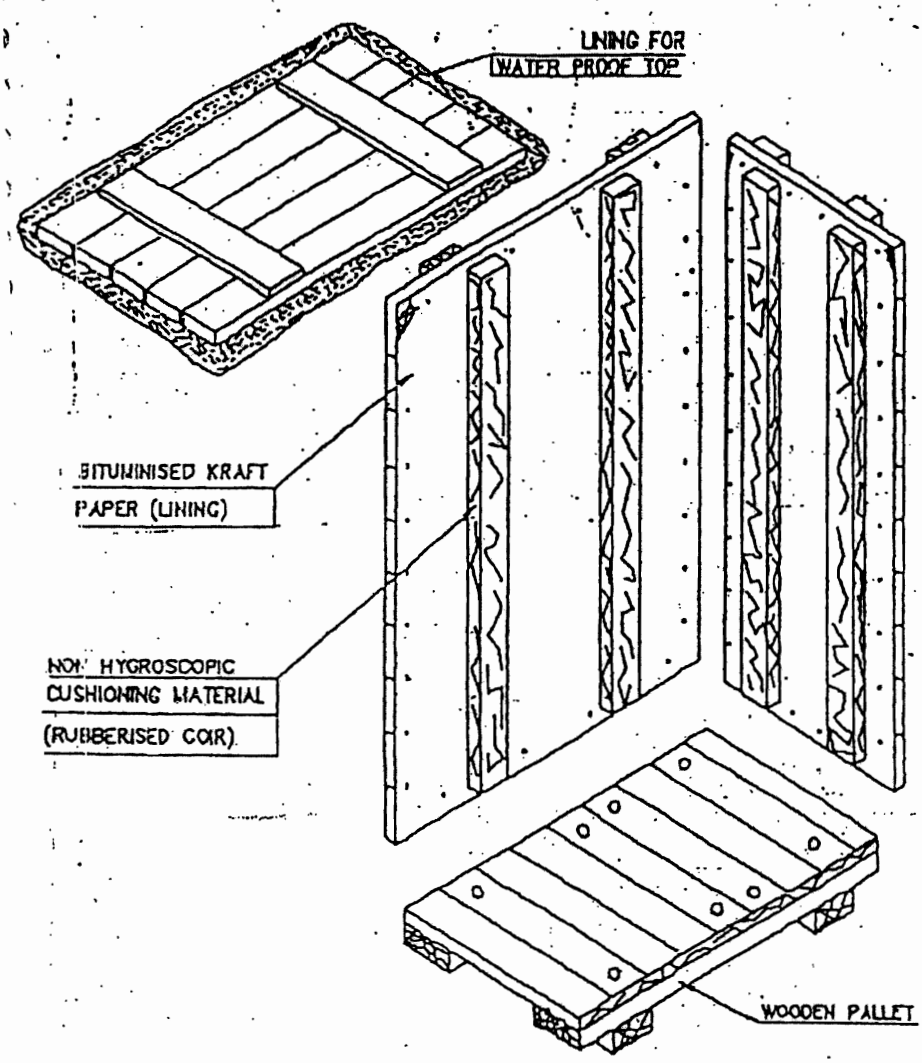

FIGURE-15

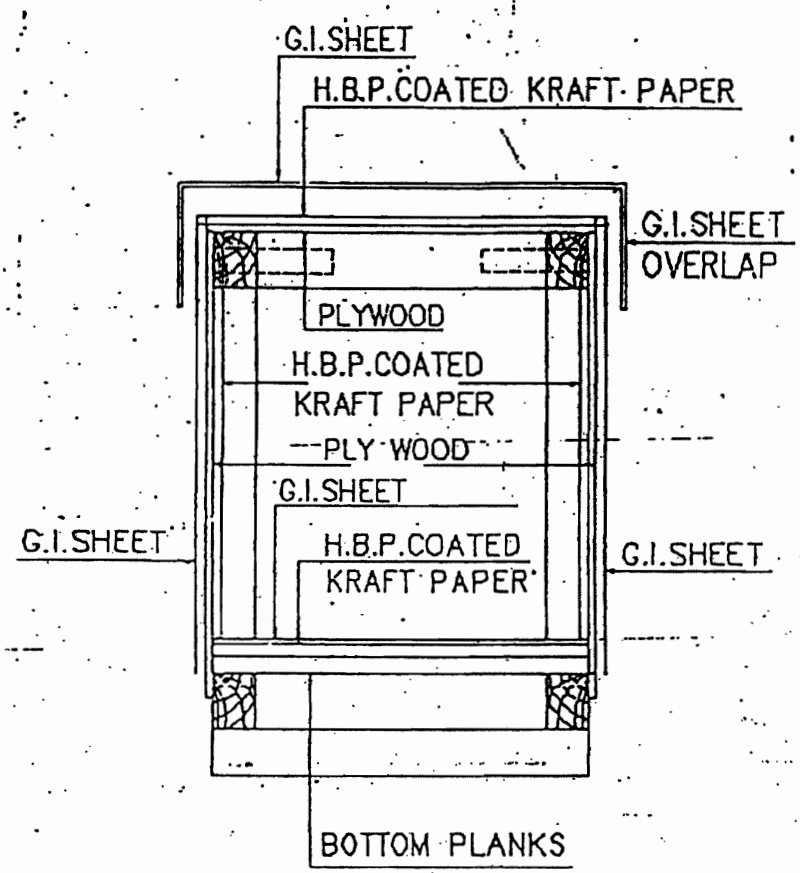

FIG-16 : CLOSED PACKING CASE WITH G.I.SHEET SHOWING LAYERS OF PACKING MATERIALS.

038

10.0 TYPICAL PACKING DETAILS/PROCEDURE FOR MECHANICAL ITEMS

10.1 INSULATION MATERIAL (MINERAL WOOL MATTRESSES)

This specification covers the requirements of seaworthy packing and marking for bonded mineral (rock) wool mattresses having metallic hexagonal wire netting as facing on one or both sides.

10.1.1 TYPE OF CONSTRUCTION

Mattress shall be packed in Polythene (of 0.2 mm thickness) all around and sealed to prevent moisture absorption during transit and storage. Further it shall be wrapped with Bitumen coated Polythene bonded/lined Hessian and stitched and then packed in 5 ply DFC carton box.

Silica gel is used for this purpose to protect contents over sufficiently long time from corrosion. Silica gel shall be of indicating type conforming to IS:304-1979 packed in cotton bags placed at different positions inside the packing for absorbing moisture and shall not come into direct contact with the material inside the package. The quantity of silica gel shall be enough for storage period of one year. However, it shall not be less than 4 gms per litre volume of case subject to minimum of 400 gms per case.

Each mattress as well as the packages shall be serial numbered. Also, printed sheets indicating the nominal thickness, density and wire netting details (i.e. material and size) shall be placed below the wire netting.

Following details shall be legibly written on the packages. The details shall also be typed on a sheet of paper & kept in a sealed Polythene cover, inside the packages

a) Project Name
b) Purchase Order No.
c) Sl. No. of package
d) Size of mattress (Thickness x Length x Width)
e) Density
f) Wire netting material and size
g) Weight of the package

10.2 INSULATION MATERIAL (ALUMINIUM COIL)

Heavy Gauge Aluminium Coil Packaging are done by Eye-to-Sky packaging or by Eye to eye packaging as per the proven practice being followed by manufacturer of Aluminium sheets.

10.2.1 Type of construction for Eye to Sky packaging

a. Strapping of coil with polyester strap around circumference at one place.

b. Putting paper I. D. Edge protector.

c. Wrapping the coil with VCI stretch film after putting silica gel bags (4 nos.) Inside the coil.

d. Wrapping the coil with HDPE film.

e. Covering the coil including its build up & bore with masonite / particle board.

f. Putting metallic I. D on coil.

g. Putting O.D edge protector (paper) on coil.

h. Putting circumferential polyester strap (3 nos.) & eye polyester strap (4 nos.).

i. After placing the coil on coil tilter ply wood (10mm thick) of suitable size along with wooden pallet is to be put at the bottom side of the coil.

j. Coil is to be tilted to eye-to-sky position.

k. Final strapping with metallic strap to unit coil and skid at 2 places with top cover of plywood.

l. Fixing the coil with wooden blocks at 4 corners.

m. Labeling 2 nos.(one metallic & one adhesivetype) For specification, net wt. & gross wt.

10.2.2 Type of construction for Eye to Eye packaging

a. Strapping of coil with polyester strap around circumference at one place.

b. Putting paper I. D. Edge protector.

c. Wrapping the coil with VCI stretch film after putting silica gel bags (4 nos.) Inside the coil.

d. Wrapping the coil with HDPE film.

e. Covering the coil including its build up & bore with masonite / particle board.

f. Putting metallic I. D on coil.

g. Putting O.D edge protector (paper) on coil.

h. Putting circumferential polyester strap (3 nos.) & eye polyester strap (4 nos.).

i. Placing of coil on wooden skid Coil is to be tilted to eye-to-sky position.

j. Final strapping of coil and skid at 2 places with steel strap. Fixing the coil with wooden blocks at 4 corners.

Labeling 2 nos.(one metallic & one adhesive type) For specification net wt. & gross wt.

10.3 Packing Procedure for Online Tube Cleaning System and accessories

This procedure is applicable for the shipment of Onload Tube Cleaning System and accessories by sea.

10.3.1 Packing details:

- The Packing case shall be made of treated rubber wood. The design of the case shall be as per Annexure IIIA & IIIB.
- The Equipments shall be placed on the wooden base of the Packing case and fastened if required to arrest the movement of the same.
- Equipment shall be covered by Polythene sheet and inside wall surfaces of the wooden cases also shall be covered by polythene sheet.
- All Nozzles shall be closed with plywood dummies.
- All electrical components assembled or loose shall be covered with polythene sheets along with silica gel pack.
- Silica gel desiccants shall be kept inside each case in sufficient quantities in order to absorb the moisture.

- Thermocol packing shall be made for glass items like Ball vessel sight glass, Vpiece
- sight glass & pressure gauge.
- Silica gel desiccants shall be kept inside of each case to absorb the moisture.
- A Packing list covered in a polythene envelope shall be fixed inside and outside of each packing case.
- Shipping marks and consignee address shall be painted on the outer surface of the case.
- All handling instruction required for the case like top, sling, rain, handle with care etc, shall be marked on the case as per the symbol attached.
- Machined surface will be applied with Anti rust oil and covered by polyurethane sheet to protect from external oxidation.
- All valves will be closed with dummies to protect the internals and placed in the wooden case which will covered by polyurethane sheet.

MODEL: FASTNERS TYPE (BASE, SIDE &TOP ATTACHED WITH BOLT, NUT & WASHER)

This Type of case to be used for following items:
1. BALL SEPERATOR 2. BALL COLECTOR SKID

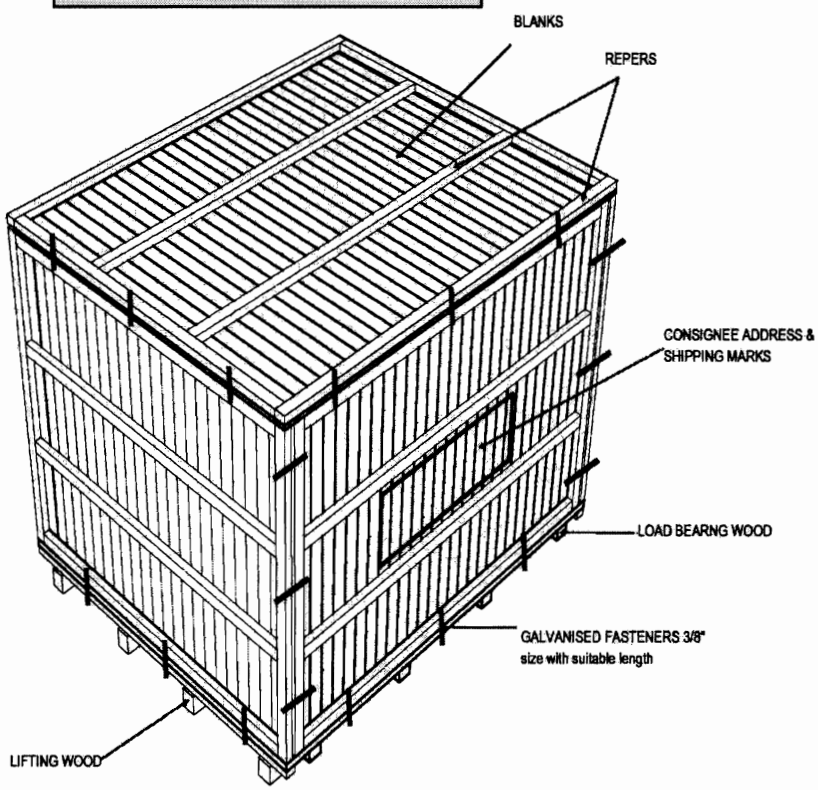

SHEET 05 of 10

BASE FRAME

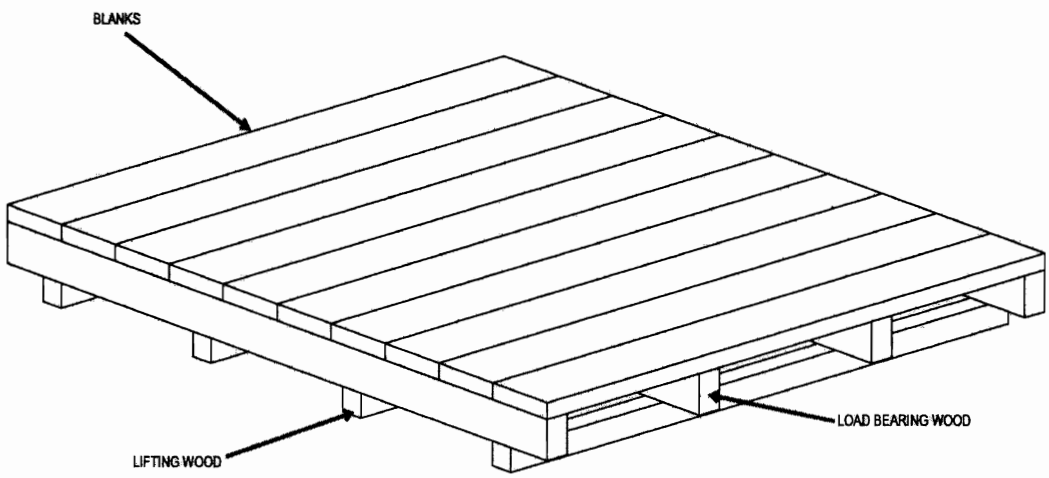

SHEET 06 of 10

MODEL: FASTNERS TYPE - WITHOUT TOP

SHEET 07 of 10

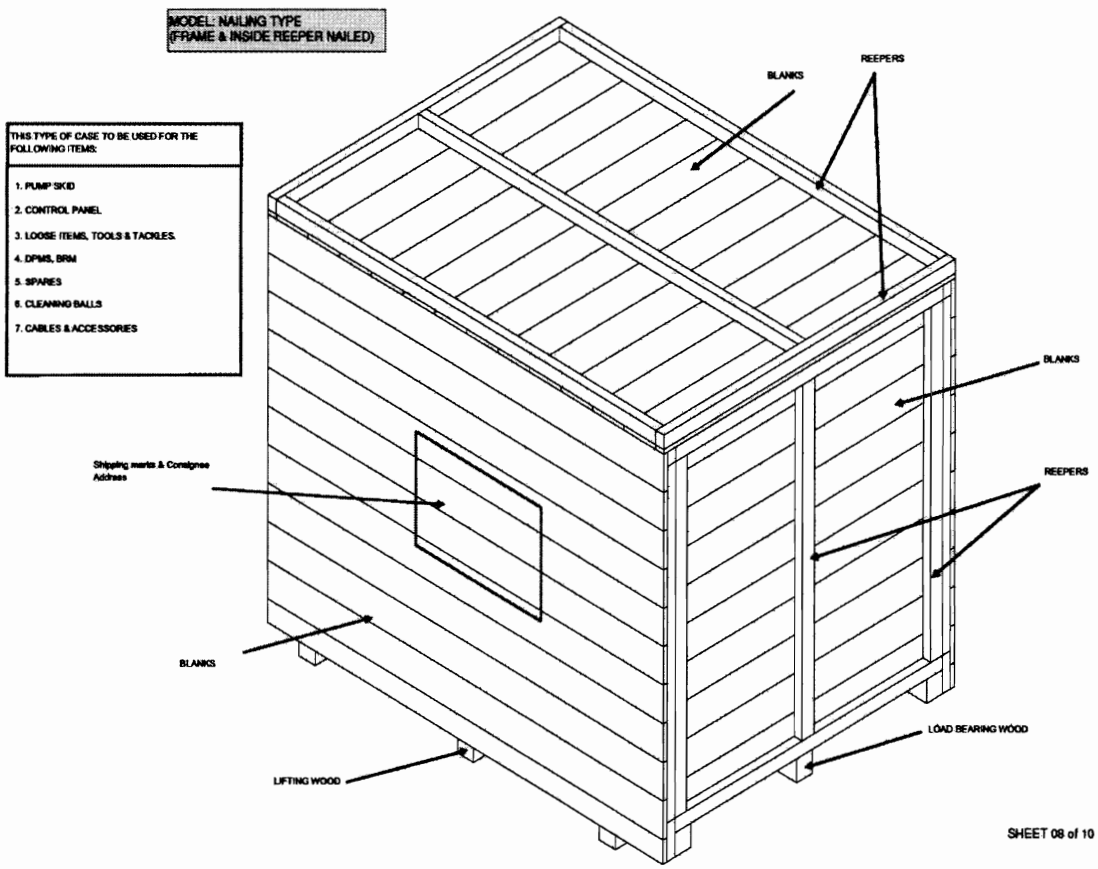
MODEL: NAILING TYPE
(FRAME & INSIDE REEPER NAILED)
THIS TYPE OF CASE TO BE USED FOR THE FOLLOWING ITEMS:
1. PUMP SKID
2. CONTROL PANEL
3. LOOSE ITEMS, TOOLS & TACKLES.
4. DPMS, BRM
5. SPARES
6. CLEANING BALLS
7. CABLES & ACCESSORIES
REEPERS
BLANKS
BLANKS
REEPERS
Shipping marks & Consignee Address
BLANKS
LOAD BEARING WOOD
LIFTING WOOD
SHEET 08 of 10

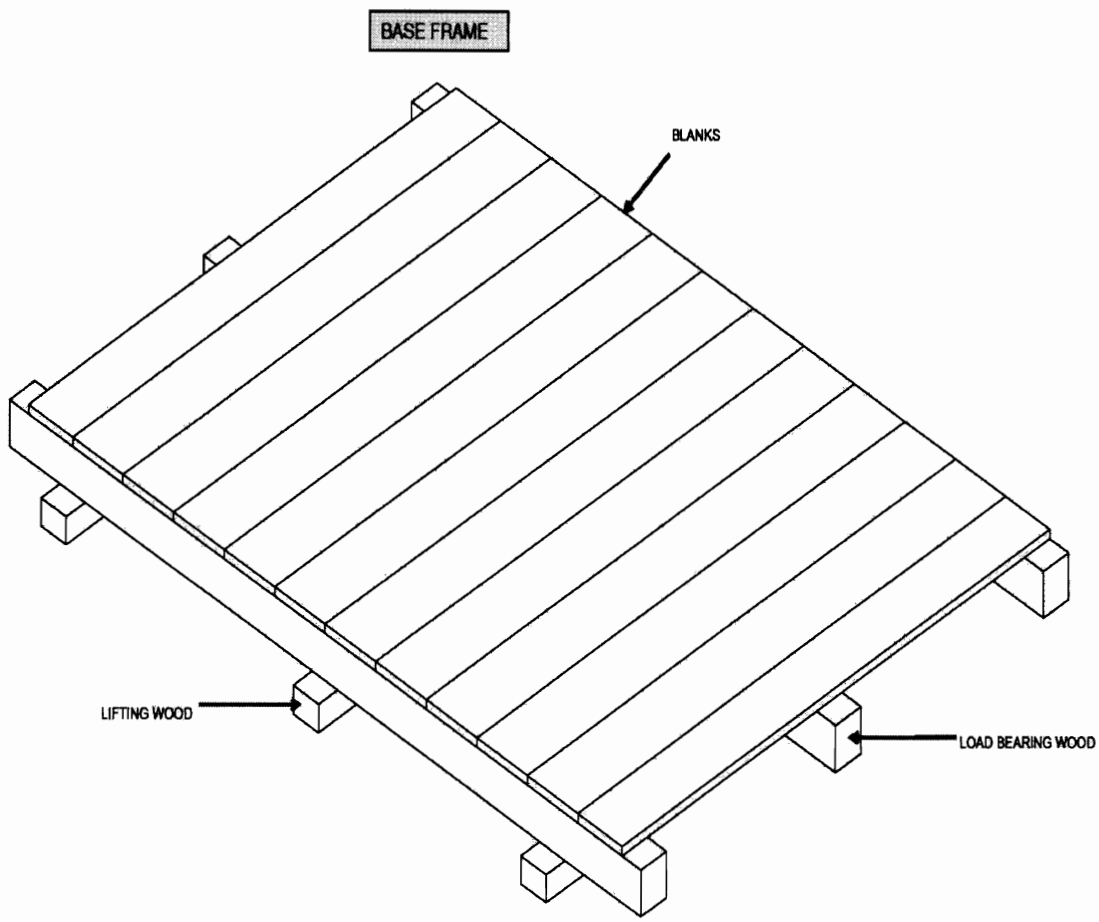

SHEET 09 of 10

NAILING TYPE MODEL WITH TOP OPEN

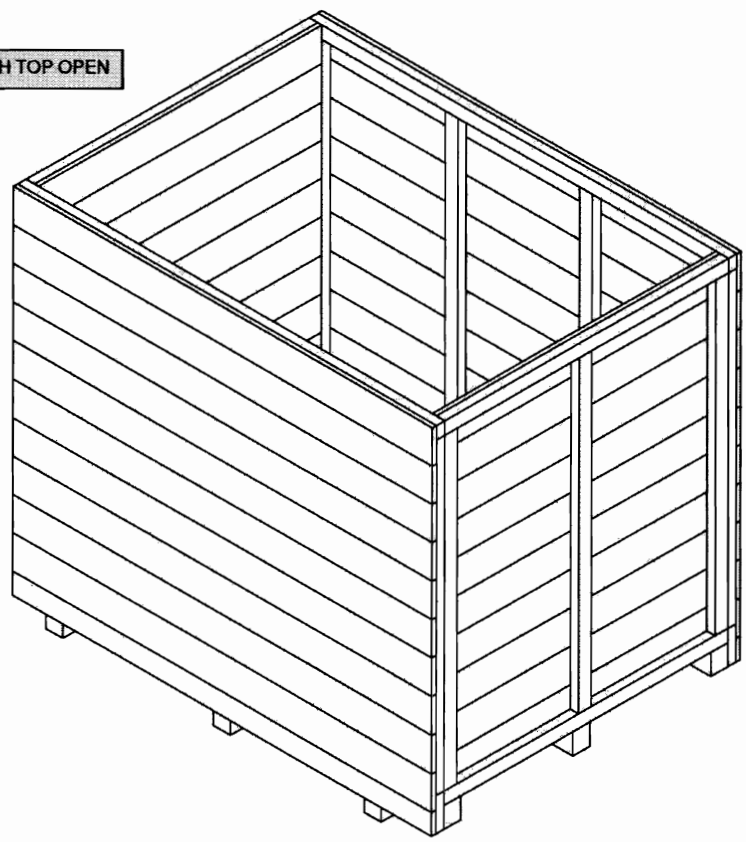

SHEET 10 of 10

10.4 PACKING OF LOOSE ITEMS

Loose mechanical, electrical and C&I items e.g. valves, fittings, pressure/temperature gauges/switches, circuit breakers, relays etc shall be individually wrapped using polyethylene sheets/U foam/ thermocol sheets/air bubble sheets depending upon the items and then packed in wooden boxes. The left out spaces and top of the boxes shall be filled with rubberized coir to get proper cushioning effect, Special attention shall be paid to relays, instruments etc for arresting the movements of their operating mechanism during transportation.

The construction of wooden packing cases shall be as per clause 9.3.1 retaining its all features concerning strength of the box. The construction of wooden packing case for electrical and C&I items shall be as per fig-16.

Inner surface of 6 sides of the box shall be lined with bitumen coated hessian polyethylene kraft paper. Rubberized coir of min. 25mm thickness and 100 mm width shall be nailed to inner surfaces of bottom and 4 sides of the boxes.

11.0 PACKING OF ELECTRICAL ITEMS

11.1 CABLES

11.1.1 Type of Equipment
All type of cables..

11.1.2 Type of Construction

New or practically new cable drums made of steel and painted with epoxy resin paint are to be used. Cable ends are carefully protected before packing. Over the cables polyethylene sheet shall be wrapped and then sealed properly. Cable drum can be put in wooden crates for ease in transportation and handling. (Wooden cable drum is also acceptable, however vendor to furnish constructional details for approval).

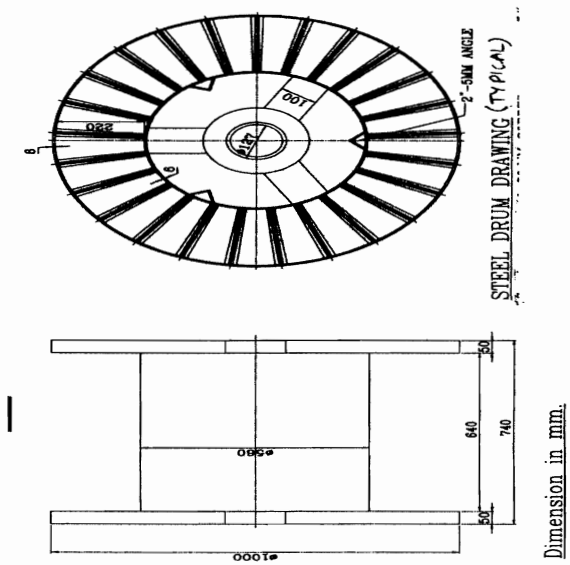
STEEL DRUM DRAWING (TYPICAL)
2"-5MM ANGLE
220
100
247
640
740
50
50
Dimension in mm.

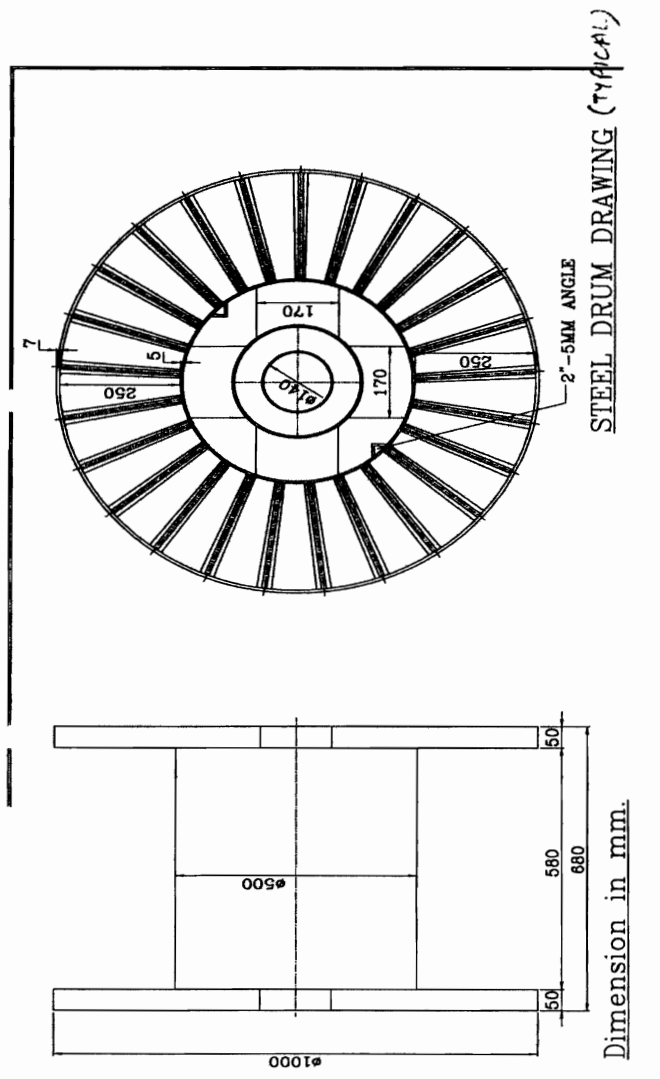

11.2 PACKING OF CABLE TRAYS & ACCESSORIES AND CABLE TRAY SUPPORT MATERIAL

11.2.1 Cable trays can be packed in wooden boxes as per fig 1 to 11 or in steel boxes. Details of steel box construction is as indicated below.

1) All Dimensions are in "mm" unless otherwise stated.
2) Packing Box shall be fabricated using 50x50x6mm MS Angle, 50x3mm Flat, 2.5 mm thick C Channel, 1mm & 1.6mm Thick sheet.
3) Finish of Packing Box Shall be Galvanized.
4) Angle & Channel Section forming part of the Main frame shall be welded thoroughly with each other to give a rigid structure.
5) Sheet Section and Flat section shall be bolted/ Riveted/ Welded suitably to the Main frame stated in '4' above.

6) Welding Portion on galvanized surfaces shall be painted with Zinc Rich Paint.

7) Dispatch details such as consignor/consignee address, contract and case details, 'country of origin, port of delivery, stacking instructions shall be written on one of the side of boxes. An anodized aluminium plate as per details and specifications given in page 3 of 5 shall be provided on the boxes

8) One copy of packing slip wrapped in polythylene bag covered with suitable aluminium .packing slip holder to be nailed on the external surface of the box. One more copy 9f the packing Slip wrapped in polythylene bag to be kept inside the box at the prominent place.

9) **INDICATION MARKS ON THE BOXES:** Markings shall be provided on the boxes indicating position of Boxes for handling, storage and nature of consignment. For guidelines referred page 4 of 5. The ink issued for this purpose as well as for marking dispatch instruction shall be indelible/non-washable marking ink.

10) Each item as mentioned in BOQ shall be packed & supplied as a set comprising of required numbers of associated fasteners & hardware etc

STEEL PACKING (TYPICAL DETAILS)

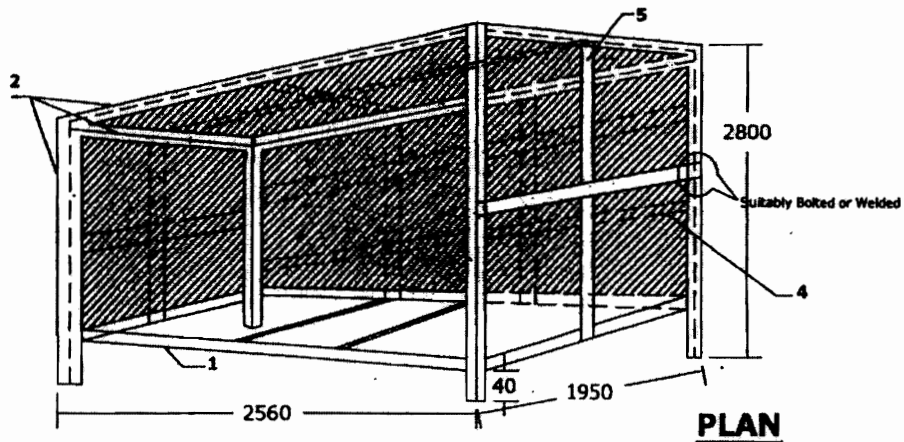

PLAN

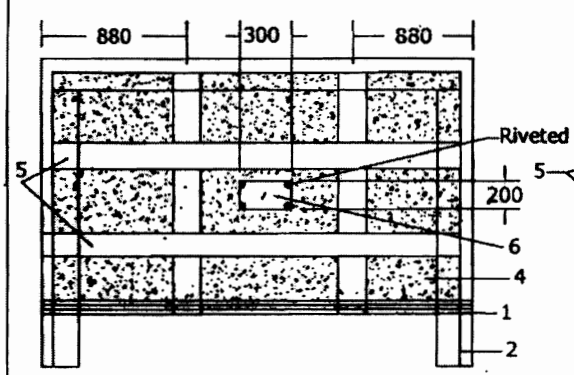

FRONT SIDE OF BOX

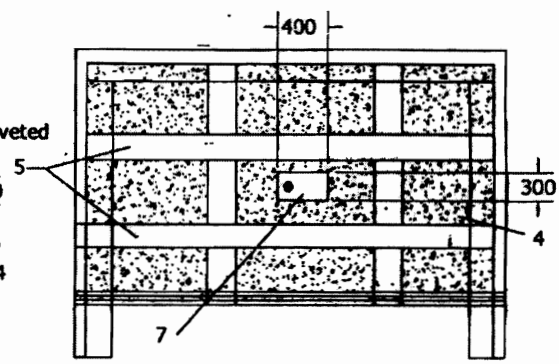

BACK SIDE OF BOX

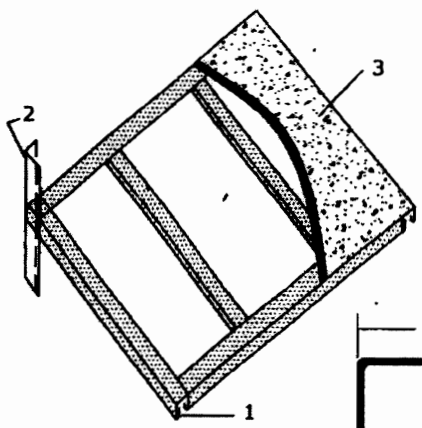

BOTTOM FRAME ARRANGEMENT

Note:

1. "C" Channel to be used on Bottom Frame.
2. 50x50x6 Angle to be used Vertically on four sides of the Box and Horizontally on four sides on the top Frame.
3. 1.6mm thick sheet (plain) on Bottom Plate.
4. 1.0mm thick sheet to cover top & four sides of BOX.
5. 50x3 Flat as additional cross members to be used Horizontally & Vertically on top & Four Sides of Box.
6. Anodised Alluminium Plate for Marking.
7. Hinged Inspection Window.

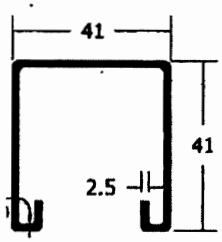

DETAILS OF "C" CHANNEL

11.3 PACKING FOR STATION LIGHTING SYSTEM

Aspects of packing specific to equipments / items of station lighting system are given here. All other instructions / aspects as per the main specification of export packing which are not covered here shall also be applicable.

11.3.1 For LIGHTING TRANSFORMER, DISTRIBUTION BOARDS, LIGHTING PANELS,

a) Construction of packing case for LIGHTING DIATRIBUTION BOARDS, LIGHTING PANELS, TRANSFORMER . shall be EITHER as per FIGURE 1,2,3,5,6,7,8,9,10,11 OR FIGURE 14,15,16.

b) Each Panel/Transformer shall be individually covered with double polythene sheet of thickness 175 microns minimum.

c) All the 6 inner surfaces of packing shall be nailed with bitumen coated hessian polythene craft paper. Wherever 2 pieces of craft paper are used, the joint shall have minimum overlap of 20mm.

For the top frame it shall be project on all sides by 100mm and shall be nailed on sides .

d) The gap between the panels and packing case shall be filled with rubberized coir of thickness 50mm minimum and width 100mm. The distance between two consecutive supports of rubberized coir shall be less than 500mm.

e) Silica get packed in cotton bags shall be placed at different positions inside the packing.

f) Packing case shall be finally covered with GI sheet of thickness 0.4mm minimum.

11.3.2 For LUMINARIES, RECEPTACLES. EMERGENCY LIGHT, 240/24V TRANSFORMER, CEILING FAN, SWITCH BOARDS, FLEXIBLE CONDUIT, WIRES, EARTH WIRE. JUNCTION BOXES, ERECTION COMMIOSSIONING SPARES, RECOMMENDED SPARES , ERECTION MATERIAL AND CONSUMBALES

a) Construction of packing case for THE ABOVE MATERIAL shall be as per FIGURE 1to11.

b) Items placed inside the case shall be covered with double polythene sheet of thickness 175 microns minimum.

c) All the 6 inner surfaces of packing shall be nailed with bitumen coated hessian craft paper. wherever 2 pieces of craft paper are used, the joint shall have minimum overlap of 20mm. For the top frame it shall be project on all sides by 100mm and shall be nailed on sides.

d) Silica get packed in cotton bags shall be placed at different positions inside the packing.

11.3.3 For CONDUIT PIPE

As per international practice pipes are shipped in open bundles with metal strapping. Packing as per attached figure A shall be provided which is described as following:

a) Each bundle shall be wrapped with 2 layers of 175 microns thick polythene sheet.

b) Then bundle will be wrapped with bitumen coated hessian craft paper.

c) Bundle shall be strapped with steel straps.

d) An anodized aluminium packing description plate as per Figure No. 13 shall be provided.

11.3.4 For POLES

Poles will be wrapped with 2 layers of minimum 175 microns thick polythene sheet and then with bitumen coated hessian craft paper, packed as per Figure – C i.e. bundling.

11.3.5 For STRUCTURAL STEEL

Structural steel will be different sizes and shapes. Hence it will be packed as per Figure No. B and described as following :

a) Each bundle shall be wrapped with 2 layers of 175 microns thick polythene sheet.
b) Then bundle will be wrapped with bitumen coated hessian craft paper.
c) Bundle shall be strapped with steel straps.
d) An anodized aluminium packing description plate as per Figure No. 13 shall be provided.

PACKING PROCEDURE FOR CONDUIT PIPE

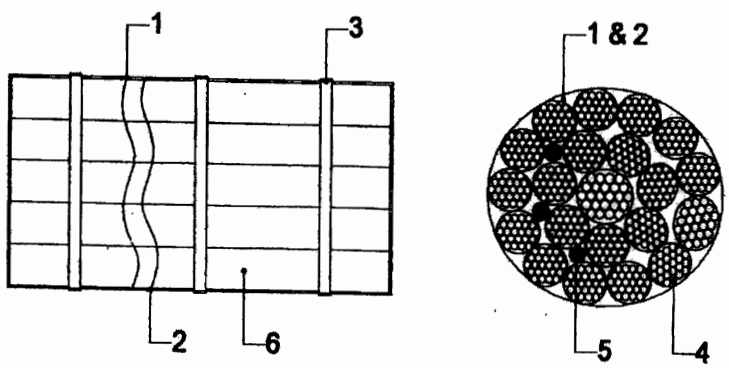

FIGURE "A"

1) LAYER OF BITUMEN COATED HESSIAN KRAFT PAPER.

2) LAYER OF POLYTHENE SHEET.

3) METAL STRAPPING.

4) CONDUIT PIPES.

5) SILICA GEL POUCHES.

6) BUNDLES OF CONDUIT PIPES.

17 of 20

PACKING PROCEDURE FOR STRUCTURAL STEEL

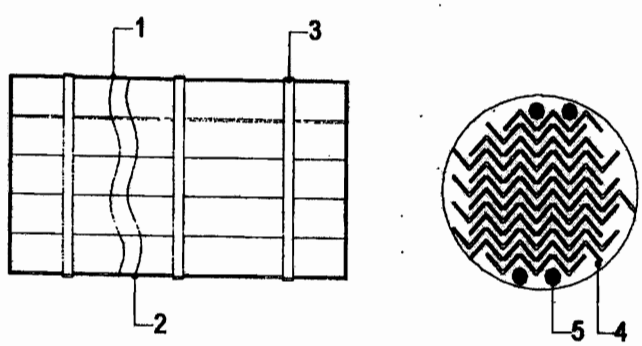

FIGURE "B"

1) LAYER OF BITUMEN COATED HESSIAN KRAFT PAPER.

2) LAYER OF POLYTHENE SHEET.

3) METAL STRAPPING.

4) STRUCTURAL STEEL.

5) SILICA GEL POUCHES.

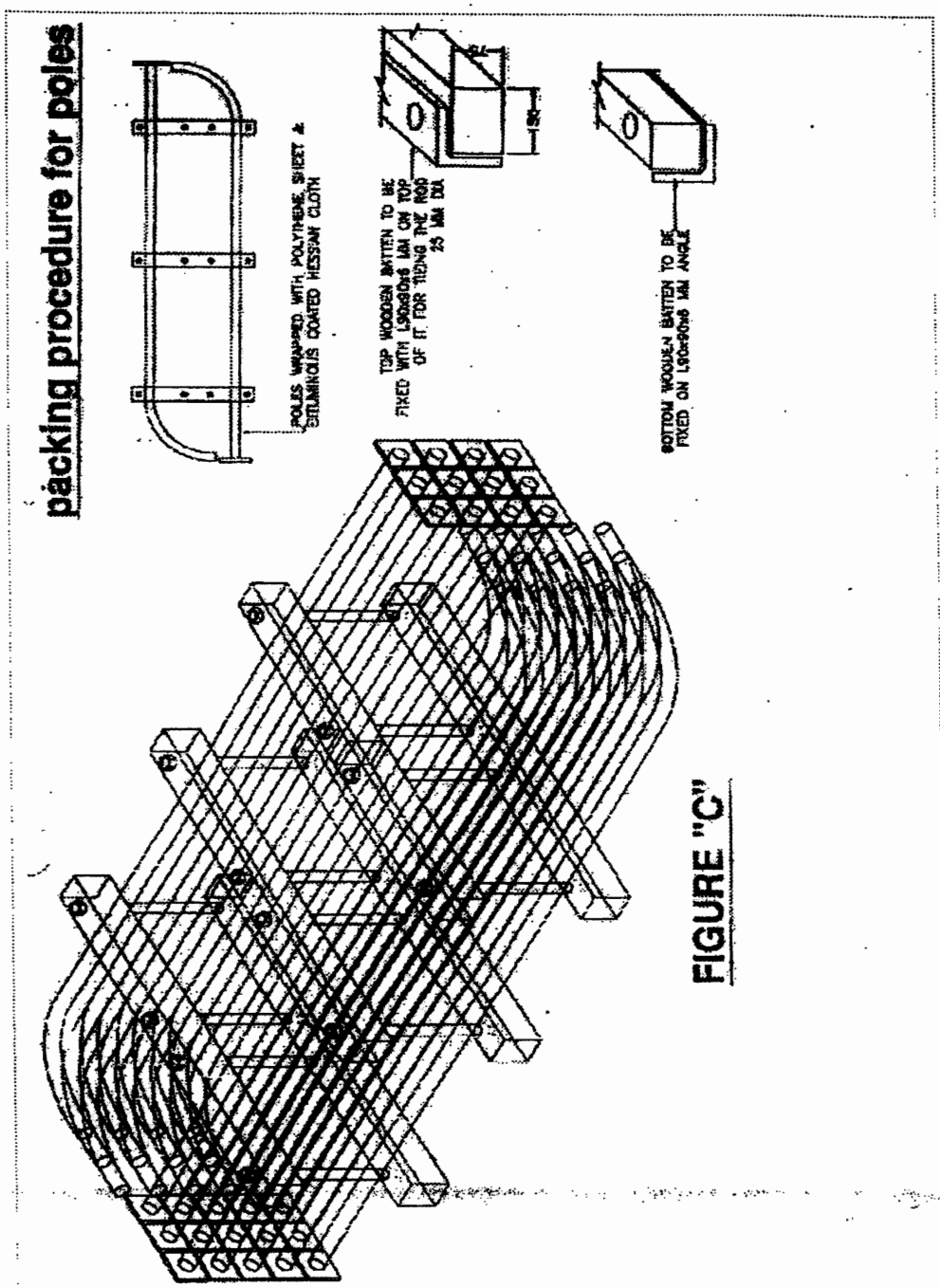
packing procedure for poles
POLES WRAPPED WITH POLYTHENE SHEET & BITUMINOUS COATED HESSIAN CLOTH
TOP WOODEN BATTEN TO BE FIXED WITH L50x50x6 MM ON TOP OF IT FOR TIDING THE ROD 25 MM DIA
BOTTOM WOODEN BATTEN TO BE FIXED ON L50x50x6 MM ANGLE

FIGURE "C"

11.4 PACKING FOR DC BATTERY

The packing procedure for seaworthy packing of DC Battery is defined below, which is capable of withstanding impacts, compression, vibration, toppling, sea water spray, prevention against rust, temperature and extreme atmospheric conditions. Aspects of packing specific to equipments / items of DC Battery are given here. All other instructions / aspects as per the main specification of export packing which are not covered here shall also be applicable.

The packing procedure consists of various stages namely primary packing, cushioning, securing, desiccant, outside packing box, Runners/ sliders/ transverse bars of plywood, etc., provided for each movement.

a) The packing boxes shall be made up of plywood boxes (thickness 9mm min.) with blocks at the bottom of the box for provision for handling the boxes using the forklift. The packing boxes sizes are generally standardized to half-euro size (capable of handling equipment's weight).

b) Rubberized coir of 25mm thickness shall be provided as cushioning material at the bottom and thermocole of 20mm shall be provided inside on all four sides. Other than this polyethylene film wrap or cover also will be provided. Left out spaces to be filled with rubberized coir/ thermocol to get cushioning effect.

c) Silica gel in dust free air permeable cotton/paper bag shall be placed in the packing boxes for storage period of 1 year as per IS 304 (1979)

d) While packing the cells, transit caps (polypropylene) of red and blue shall be used for big size cells for ensuring that cells does not get damaged during the transport due to vibrations etc.

e) The battery accessories shall be packed with suitable precautions as follows:

i) Copper connectors shall be packed after making bunches with lead wire seals to avoid misplacement.
ii) Hardware items shall be packed in polyethylene bags (Thickness ≥ 0.175mm) with item slip
iii) Battery rack shall be packed in dismantled condition, wrapped with polyethylene sheet
iv) For Ni-Cd type battery, electrolyte in solid form for dry cells shall be packed in cans with KOH, LiOH being packed separately.
f) Galvanized Steel straps are provided for binding the packing box sides.
g) The handling instructions shall be marked in indelible/ non-washable ink, indicating the upright position.

11.5 PACKING OF SERVICE TRANSFORMERS(OIL FILLED) & ACCESSORIES

This instruction is applicable for packing of transformers (oil filled), its accessories and components so as to ensure safe delivery to end user. Aspects of packing specific to equipments / items of transformers(oil filled) are given here. All other instructions / aspects as per the main specification of export packing which are not covered here shall also be applicable.

11.5.01 PACKING DETAILS :

a Items shall be packed in case / crates as per the shipping list.
b All fragile items and small items shall be packed in cases and to be marked as "Fragile, handle with care Fragile items".
c Fragile accessories are to be first packed in their original boxes (VENDOR's packing). Very

small / delicate items such as glass thermometer, door keys shall be packed in separate box.

d In case original box is found damaged, suitable alternate box or packing method using felt or foam sheet and polythene wrap to be used.

e These boxes are then placed in identified wooden boxes. Inside of such boxes are lined with a layer of polythene sheet, packing wool / grass and another layer of polythene sheet before placing the boxes. All boxes are then wrapped with this polythene sheet before closing the box. Fragile items shall not be placed loose, one above the other inside the case.

f All wiring cables, connection flats of non-ferrous materials, CTs, valves bellows shall also be packed.

g Items like CTs, Oil communicating bushings, insulators, wired equipments and housings such as RTCC Panel, M. Box, Drive Mechanism, thermometers, gauges shall be wrapped in polythene from all around.

h Buchholz relay and OSR relay openings will be blanked using covers, before putting them in the box

i Items shall be carefully lowered and arranged inside the crate / case and each item shall be locked from all sides in such a way to avoid its movement in any way. Wooden stoppers and separators shall be provided for this and nailed to the crate / case wood.

j Wooden planks and batons in contact with fragile items shall be provided with kit foam at the locations of contact.

k Oil communication bushings shall be packed in separate case on V or U shape wooden felted supports, as in case of condenser bushings.

l While placing and arranging the items inside the crates / cases, these shall be verified for correctness and then the packing note shall be signed. The cover top of the crate / case shall then be closed.

m The main equipment like transformer tank shall be packed suitably to prevent any damage during transit / storage. Support structures like frame, header supports etc. shall be crated. Conservator headers shall also be crated. Radiators pipe work and other instruments & components shall be packed in cases. All the cases shall be lined with polythene from inside.

11.6 ALTERNATIVE PACKING CASES FOR CONTROL PANELS AND SWITCH GEARS

For Control and switch gear panels, construction of wooden packing cases may be provided as per fig 14 & 15 and as detailed below.

Thickness of planks for all sides, binding and jointing battens shall be at least 25 mm. Width of the plank shall be at least 125mm and that of binding and jointing planks shall be at least 100mm.

Top frame shall be suitable so that it does not collapse due to sandwiching between slings while lifting. Longitudinal and traverse bars for the bottom wooden pallet to be suitably selected.

Diagonal bracings shall be as per cl 9.3.1.3 and all other requirements shall be as per clauses 9.3.1.4 to 9.3.1.6.

12.0 Containerization

As required by BHEL, the VENDOR shall stuff the GOODS into 20 or 40 foot containers (dry, open top, flat racks, etc.).
The maximum inside dimensions of containers are to be considered:

- 40 foot containers: 11.80 m x 2.20 m x 2.05 m
- 20 foot containers: 5.80 m x 2.20 m x 2.05m
-

The present definition of containerization is valid for sea containers only. Vendor to check the size of containers before start of packing of equipment.

12.1 Protection of Cases/Crates

Since shipping containers are in general not water tight, packing in contact with the floor of the container shall be raised in order to prevent it from being damaged by the accumulation of water.

12.2 Mechanical Constraints

The mechanical constraints for "general use" closed containers are of a different nature (height of "stacking" being limited inside the containers), the packing for the GOODS may be of a lighter structure. However, it is necessary that the packing be appropriate so as to protect the GOODS on site during the storage period, as required after discharging of the GOOD'S from the containers.

Note:

It is the responsibility of the VENDOR to ensure that the cases/crates are stowed, secured and fastened inside the container. The VENDOR will take all necessary precautions to conform to the maximum weight allowed and the centre of gravity of the container. The securing and fastening of the cases/ crates can be carried out by nailing timbers on the bottom or on the vertical sides of the container.

13.0 Other Services to be provided by Vendor

In addition to the packing and shipping documents, VENDOR must also carry out the following services, which shall be included in his quotation:

Carriage of VENDOR's sub-contracted equipment and material, which must be re-grouped in VENDOR's or PACKER's workshops, whilst waiting for packaging.

BHEL reserves the right to postpone the shipping of the GOODS. In this event, any storage and insurance costs during the first ninety (90) days shall be borne by the VENDOR.

Loading, including lifting, securing, lashing, and stowing, of all cases, crates, or packages onto means of transportation such as, but not limited to, trailers, containers, etc.

14.0 Responsibilities and Guarantees

VENDOR is responsible for the choice of category for packing according to the transport facilities used, and on the basis of the present document. In case of doubt or disagreement regarding the choice, VENDOR must inform BHEL prior to packing and await BHEL's approval. All phases of packaging, marking, loading, etc. will be subject to BHEL inspection.

BHEL reserves the right to reject the packing when the packing does not conform to these instructions and/or when the packing does not ensure perfect protection of the GOODS.
VENDOR is responsible for the weights and dimensions declared, and the marking of the packages.

The documents must be in strict conformity with the packing contents.
The packing specified in these "Packing, Marking and Shipping Instructions" is guaranteed for a twelve (12) months storage period after delivery on site.

VENDOR is responsible for providing storage recommendation adapted to the GOODS. According to this guarantee, VENDOR is held responsible in the event of goods becoming

useless, damaged or broken, as a result of poor packing and/or stowing, or due to corrosion, subsequent to insufficient or inadequate protection. All direct or indirect costs resulting thereof, will be back-charged to VENDOR.

ANNEXURE – E
TO
INTERNAL ORDER NO. INTORD0489

PACKING & SHIPPING INSTRUCTIONS

1. **All units/ sub vendors/ contractors are strictly advised to comply with packing instructions mentioned in contract documents (GCC clause 65: Packaging & Section V, FTS, Clause B0.3.5 Packaging and transportation).**

2. Special Packing Instructions & Inspection Prior to Dispatch

   - Packing (tare) shall be part of the Equipment cost and shall not be subject to return. The packing should ensure integrity and cohesiveness of each delivery batch of Equipment during transportation. In case of Equipment assemblies and unit's delivery in the packing of glass, plastics or paper the specification of packing with the **material and weight characteristics are to be indicated.**

   - All packages to be wrapped in transparent polythene inside the crates for effective weather proofing

   - Each package should have the following inscriptions and signs stenciled with an indelible ink legibly and clearly:

     Destination:
     Package number: BHEL/MTR/BD/XXX/YYYYY where XXX stands for Unit abbreviation e.g. RPT
     YYYYY stands for package no.
     Gross and Net weight
     Dimensions
     Lifting places
     Handling marks and the following delivery marking:

     "BANGLADESH-INDIA FRIENDSHIP POWER COMPANY (Pvt.) LIMITED
     2X660 MW MAITREE SUPER THERMAL POWER PROJECT
     BANGLADESH"
     EPC CONTRACTOR: BHARAT HEAVY ELECTROCALS LIMITED, INDIA

   - Completeness of Contents of each packing case:_Concerned CQA/Unit QC/Third Party Inspection Agency shall verify the completeness of contents of each package w.r.t packing list both in terms of quality and quantity before authorising dispatch of the consignment.

   - Packing commensurate with international standards and accepted norms will be ensured by CQA/ Unit QC/Third Party Inspection Agency. Packing has to be **SEA WORTHY** and secure.

   - As far as possible, the packing has to be rectangular in shape for optimum space utilization in the ship and economize on shipping costs. Projections on packages are prohibited.

   - The packing list has to be checked and certified by the Inspection agency (ies) with due signatures.

   - Packages are envisaged to be transported on Vessels/ Barges through Sea/ river water ways and will require transhipment and intermediate storage. Hence, if deemed necessary by respective unit, packages may be enclosed in suitable GI sheets on all sides to prevent any damage during transportation/ transhipment/ storage.

   - No loose items / Gunny bags packing shall be allowed for shipment.

   - Proper pallets and crates are to be used for packing of Oil drums and Structures.

- Routing of Packing Lists: Packing list is an extremely important document, which forms a part of export documentation in connection with the processing of customs formalities. Packing List has to be generated by units/Unit vendors and sent to MEPG and ROD (both at the same time), two weeks in advance, for processing and obtaining shipping bills' clearances and avoiding octroi payment through 'N' form at Mumbai.

- Advance intimation to ROD & MEPG: All supplying units/vendors will give at least 15 days advance intimation to ROD & MEPG along with package details before actual dispatches to arrange for storage/shipping arrangements by ROD and customs invoicing by I0. Information must be sent to consolidate the details and arrange for shipments in time.

- Excise Attestation at Works: To avoid opening of big cases for examination by customs at port of shipment, the supplying unit may arrange to get the packing cases sealed by local excise authorities/ self-certification and the relevant invoices and packing lists to be endorsed from Superintendent, Central Excise. For this purpose, Units should send the packing lists to MEPG at least 2 weeks in advance to enable prepare Shipping Invoices for furnishing to the units for requisite attestation and sending to ROD through fastest means for a smoother and faster customs clearance. Also Units to provide "specification of packing with the indication of the number of cargo packages, type of packing and weight of packing in English" along with the packing list.

- If deemed necessary by respective unit, provision of Inspection Windows of size 6" x 4" (glass perplex) for customs examination for all packages (above 1.5 x 1.5 x 1.5 cu m) involving panels of any kind shall be provided by Unit/Vendors . Care would be taken to ensure that all packages are properly sealed to avoid ingress of moisture, rodents etc. Packing slip folders to be attached in each box.

- Drawings for Heavy Weight/ODC consignment: Any package/item weighing above 20000 kgs and/or size greater than 2.5 X 2.5 X 4 m. detailed engineering documents (at least 4 sets) for all items of the above category will be furnished by respective units to issue shipment enquiries in a proper manner. The drawing has to include centre of gravity of the item clearly (Units to identify such items and notify MEPG as soon as the engineering documents are released).

- Lifting Beams: All heavy lifts for which safe handling is essential at the port of dispatch shall be accompanied by lifting beam on non-returnable basis.

- "Marking for Safe Handling: To ensure safe handling, packing case shall be marked to show the following:

  - ✓ Upright position.
  - ✓ Sling position and Centre of Gravity position.
  - ✓ Storage category.
  - ✓ Fragile components (to be marked properly with a clear warning for safe handling).

Employer, or its authorised representatives or agents shall have the right to examine and audit, during business hours, all books, statements, accounts, correspondence, instructions, specifications, plans, drawings, receipts, memoranda, accounting documents and other records of Contractor and Subcontractors in so far as they are pertinent.

(ii) Contractor shall cause all of its and each Subcontractor's documentation referred to in Clause 64.1 and above in this Clause 64.3 to be preserved and made available for examination and audit for a period of three (3) years after Final Acceptance or three (3) years after the date of termination of this Contract, whichever is earlier.

(iii) The foregoing right of examination and audit shall extend, but shall not be limited to, calculations of unit rates, percentages, per diem charges or other similar fixed amounts or man-hours worked or estimated to be worked which are to provide the basis of reimbursements to Contractor under this Contract and adjustments of the Contract Price.

(iv) The foregoing right of examination and audit shall survive any early termination of this Contract.

64.4 Without prejudice to the foregoing provisions of this Clause 64, the Contractor shall also such accounts in respect of the construction and development of the Works (and provide to the Employer and its representatives), as are required to be maintained (and provided) by the Employer in terms of the Implementation Agreement and the PPA.

65.0 PACKAGING

All equipment and materials and other Plant shall be suitably coated wrapped, or covered and boxed or crated for export shipment and to prevent damage during handling and storage at the Site. Cardboard containers shall be enclosed in a solid wooden container.

Equipment and process materials shall be packed and semi-knocked down, to the extent possible, to facilitate handling and storage and to protect bearings and other machine surfaces from oxidation. Each container, box, crate or bundle shall be reinforced with steel strapping in such a manner that breaking of one strap will not cause complete failure of the packaging. The packing shall be of best standard to withstand rough handling and to provide suitable protection from tropical weather while in transit and while awaiting erection at the Site.

Equipment and materials in wooden cases or crates shall be properly cushioned to withstand the abuse of handling, transportation and storage. Packing shall include preservatives suitable to tropical conditions. All machine surfaces and bearings shall be

coated with oxidation preventative compounds. All parts subject to damage when in contact with water shall be coated with suitable grease and wrapped in heavy asphalt or tar impregnated paper.

Crates and packing material used for shipping will become the property of Employer, but the Contractor will be allowed to use the same for the Work as needed, but the remaining material shall be turned over to Employer upon completion of the Project.

Provided however, shippers container used for transportation of material shall be returned to the Contractor.

Packaging or shipping units shall be designed within the limitations of the unloading facilities of the receiving ports and the ship which will be used. Ships with special heavy capacity unloading rigging may be required for large units of equipment. It shall be the Contractor's responsibility to investigate these limitations and to provide suitable packaging and shipping to permit transportation to the Site.

Each package or shipping unit shall be clearly marked or stenciled on at least two sides as follows:

BANGLADESH-INDIA FRIENDSHIP POWER COMPANY (Pvt.) LIMITED
2X660 MW MAITREE SUPER THERMAL POWER PROJECT
BANGLADESH
(Name of the Contractor)

In addition, each package or shipping unit shall have the symbol painted in red on at least two sides of the package, covering one fourth of the area of the side.

Each part of the equipment which is to be shipped as a separate piece or smaller parts packed within the same case shall be legibly marked to show the unit of which it is part, and match marked to show its relative position in the unit, to facilitate assembly in the field. Unit marks and match marks shall be made with steel stamps and with paint.

Each case shall contain a packing list showing the detailed contents of the package. When any technical documents are supplied together with the shipment of materials no single package shall contain more than one set of such documents. Shipping papers shall clearly indicate in which packages the technical documents are contained.

The case number shall be written in the form of a fraction, the numerator of which is the serial number of the case and the denominator the total number of case in which a complete unit of equipment is packed.

Wherever necessary besides usual inscriptions the cases shall bear special indication such as "Top", "Do not turn over", "Care', "Keep dry", etc., as well as indication of the centre of gravity (with red vertical lines) and places for attaching slings (with chain marks).

Cases which cannot be marked as above shall have metal tags with the necessary markings on them. The metal tags shall be securely attached to the packages with strong steel binding wire.

Each piece, skid, case or package shipped separately shall be labelled or tagged properly.

66.0 COMPLETION

66.1 All Works under the scope of this Contract shall be completed (that is, a Provisional Acceptance Certificate is issued) on or before the expiration:

(a) For the entire Power Plant excluding Unit no. 2: the Guaranteed Completion Date for Unit No.1; and

(b) For Unit no. 2: the Guaranteed Completion Date for Unit no. 2.

67.0 PRECOMMISSIONG, COMMISSIONING, RELIABILITY TEST RUN AND PROVISIONAL ACCEPTANCE CERTIFICATE (PAC)

67.1 **Pre-Commissioning**

As soon as the Unit or Power Plant (as the case may be) has, in the opinion of the Contractor, been completed operationally and structurally and put in a tight and clean condition as specified in the Technical Specifications whereupon the process for Pre-Commissioning as identified in the Technical Specification shall be followed.

It is clarified that the Pre-Commissioning shall not be undertaken till such time as the following conditions precedent are fulfilled to the satisfaction of the Employer and the Engineer:

(a) the issuance / availability of the individual erection completion certificates in accordance with the Technical Specifications;

(b) the Contractor has completed the rectification of all relevant / material erection punch points (and only minor items not materially affecting the operation or safety of the Unit or Power Plant (as the case may be) shall be subsist); and

Bangladesh-India Friendship Power Company (Pvt) Ltd. BIFPCL

P&IDs

FIRST ANGLE PROJECTION ALL DIMENSIONS ARE IN MM

DRAWING No.

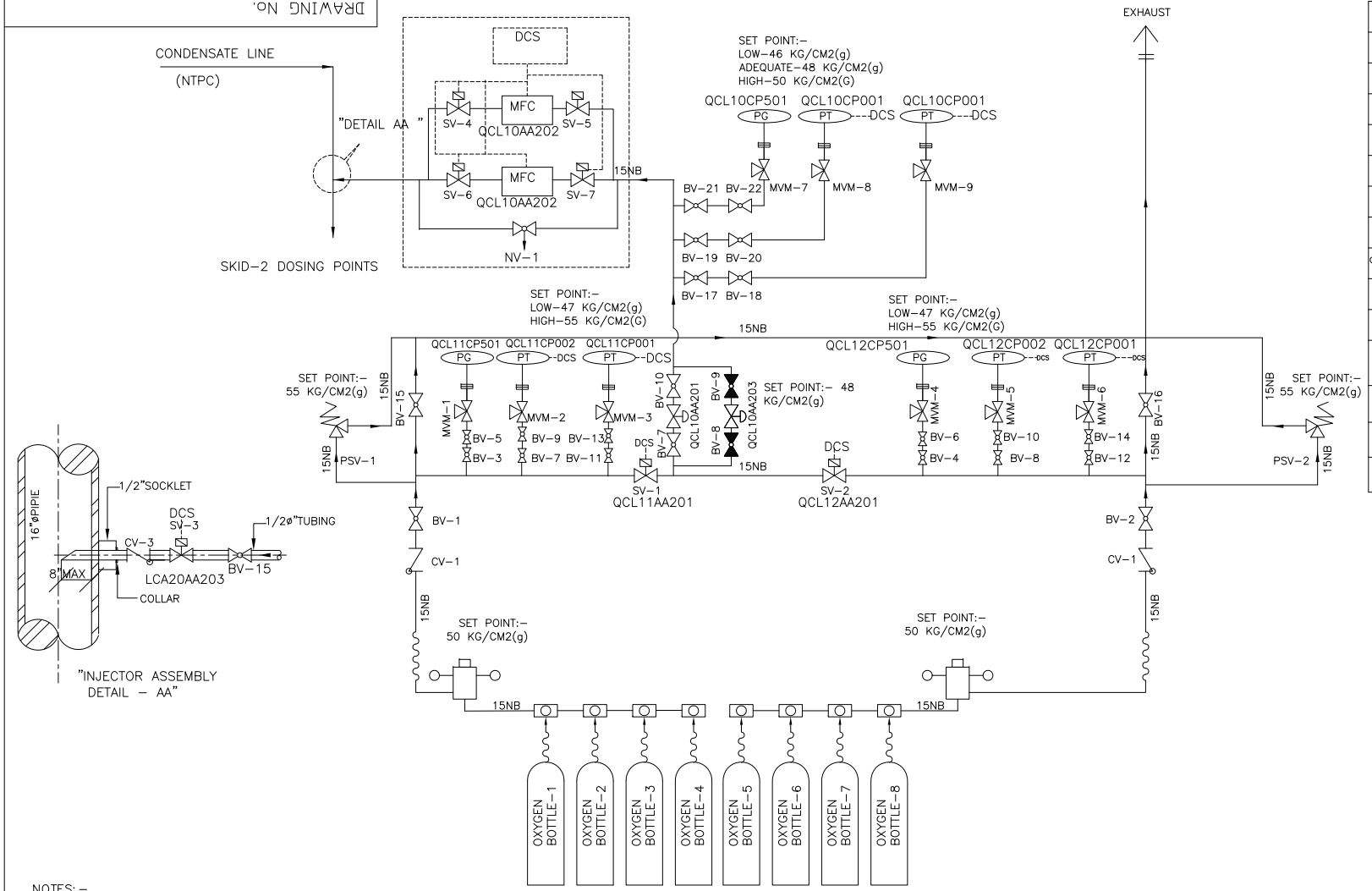

LEGEND

	PRESSURE REDUCING CUM REGULATING VALVE
	NEEDLE VALVE
PT	PRESSURE TRANSMITTER
	SOLENOID ACTUATED VALVE
PG	PRESSURE GAUGE
	NON RETURN VALVE
	FLOW METER WITH TRANSMITTER
	BALL VALVE
	PRESSURE REGULATOR
	PRESSURE SAFETY VALVE
	DISCHARGE TO ATMOSPHERE FOR GAS/SYSTEM
	PNEUMATIC CONTROL VALVE
	MULTI-VALVE MANIFOLD(SEE NOTES)
	CHEMICAL SEAL DIAPHRAGM
MFC	THERMAL MASS FLOW CONTROLLER (INCLUDING FLOW CONTROL VALVE)

NOTES:-

1 THE ENTIRE SYSTEM INCLUDING THE JUNCTION BOX SHALL BE SKID MOUNTED.
2 ONE NUMBER SKID PER UNIT SHALL BE PROVIDED FOR DOSING AT CEP DISCHARGE (TOTAL=2 NOS).
3 ONE NUMBER INJECTION ASSEMBLY PER UNIT SHALL BE SUPPLIED LOOSE (TOTAL = 2 NOS).
4 ALL THE VALVES SHALL BE OF SS 316.
5 ALL TUBING SHALL BE OF SS 316, 15 NB AND 18 BWG.

COPY RIGHT AND CONFIDENTIAL
The information on this document is the property of BHARAT HEAVY ELECTRICALS LIMITED
it must not be used directly or indirectly in any way determental to the interest of the company.

REV.	DATE	ALTD	CHD	APPD

JOB No. 421
STATUS CONTRACT
DISTRIBUTION

BANGLADESH-INDIA FRIENDSHIP POWER COMPANY (PVT) LTD.

2X660 MW BIFPCL MAITREE KHULNA STPP, (BANGLADESH)

BHARAT HEAVY ELECTRICALS LTD
POWER SECTOR
PROJECT ENGINEERING MANAGEMENT
NEW DELHI

DEPT CODE		NAME	SIGN	DATE
A	DRN	SP		31.07.17
	DESN	SP		31..07.17
	CHD	JP		31.07.17
	APPD	JP		31.07.17

TITLE P&ID FOR OXYGEN DOSING SKID AT CPU OUTLET

DRAWING No. PE-DG-421-154-12000A-A001

SHEET 01 OF 02 REV 00

SIZE-A3

COMPUTER FILE NAME :

FIRST ANGLE PROJECTION ALL DIMENSIONS ARE IN MM

DRAWING No.

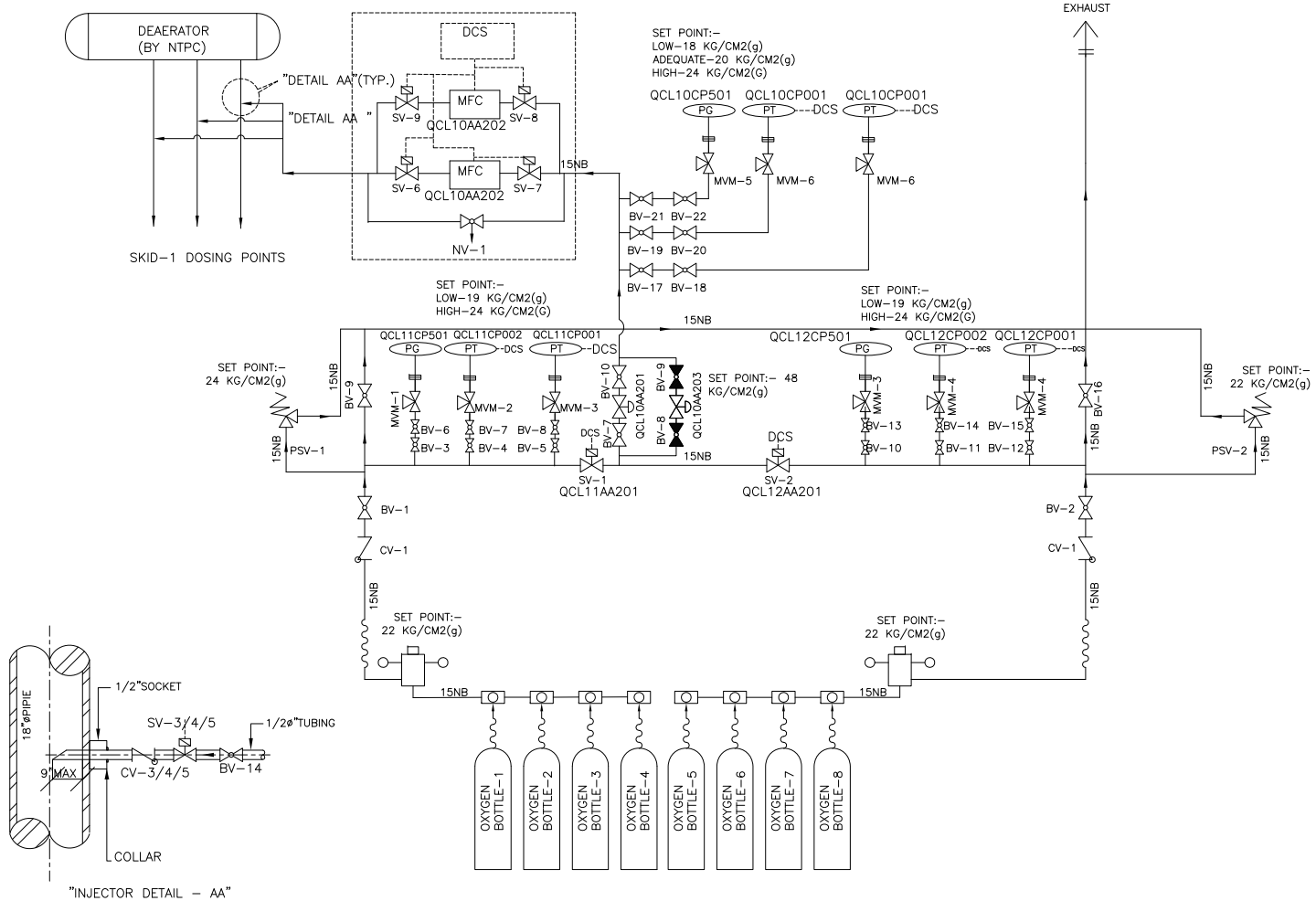

LEGEND

	PRESSURE REDUCING CUM REGULATING VALVE
	NEEDLE VALVE
PT	PRESSURE TRANSMITTER
	SOLENOID ACTUATED VALVE
PG	PRESSURE GAUGE
	NON RETURN VALVE
	FLOW METER WITH TRANSMITTER
	BALL VALVE
	PRESSURE REGULATOR
	PRESSURE SAFETY VALVE
	DISCHARGE TO ATMOSPHERE FOR GAS/SYSTEM
	PNEUMATIC CONTROL VALVE
	MULTI-VALVE MANIFOLD(SEE NOTES)
	CHEMICAL SEAL DIAPHRAGM
MFC	THERMAL MASS FLOW CONTROLLER (INCLUDING FLOW CONTROL VALVE)

395

NOTES:-

1 THE ENTIRE SYSTEM INCLUDING THE JUNCTION BOX SHALL BE SKID MOUNTED.
2 ONE NUMBER SKID PER UNIT SHALL BE PROVIDED FOR DOSING AT DEAERATOR OUTLET (TOTAL=2 NOS).
3 THREE NUMBERS INJECTION ASSEMBLY PER UNIT SHALL BE SUPPLIED LOOSE (TOTAL = 6 NOS).
4 ALL THE VALVES SHALL BE OF SS 316.
5 ALL TUBING SHALL BE OF SS 316, 15 NB AND 18 BWG.

BANGLADESH-INDIA FRIENDSHIP POWER COMPANY (PVT) LTD.
2X660 MW BIFPCL MAITREE KHULNA STPP, (BANGLADESH)

BHARAT HEAVY ELECTRICALS LTD
POWER SECTOR
PROJECT ENGINEERING MANAGEMENT
NEW DELHI

DEPT CODE		NAME	SIGN	DATE
A	DRN	SP		31.07.17
	DESN	SP		31.07.17
	CHD	JP		31.07.17
	APPD	JP		31.07.17

TITLE P&ID FOR OXYGEN DOSING SKID AT DEAERATOR OUTLET

DRAWING No. PE-DG-421-154-12000A-A001

SHEET 02 OF 02 REV 00

SIZE-A3

REV.	DATE	ALTD	CHD	APPD

JOB No. 421
STATUS CONTRACT
DISTRIBUTION

COPY RIGHT AND CONFIDENTIAL
The information on this document is the property of BHARAT HEAVY ELECTRICALS LIMITED
it must not be used directly or indirectly in any way detrimental to the interest of the company.

COMPUTER FILE NAME :

DATA SHEET

Sl. No	Description	Parameter
Mechanical Items		
1.0	No. of skid(s)for project	Four (two per unit)
2.0	**Cylinders:**	
2.1	Quantity mounted on skid	Eight per skid (Total thirty Two)
2.3	Design Standard of empty oxygen cylinder	ISO 9809 Part-1
2.5	Water Capacity	50 liters
2.6	Gas Capacity	10 m^3
2.7	Max Working pressure at 15°C	204 Kg/cm^2
3.0	**All Tubing:**	
3.1	Material	SS 316
3.2	Diameter	15 NB (1/2" OD), 18 BWG
4.0	**Ball valves**	
4.1	Body, Bonnet, stem	SS 316
4.2	Trim Material	SS 316
4.3	Design standard	MSS-99-2010/ Equivalent
4.4	Test standard	MSS-99-2010/ Equivalent
4.5	Size	15 NB
4.6	End Connections	Ferruled
4.7	Rating	2000 PSI
4.8	Valve operation	Manual or pneumatic as per P&ID
5.0	**Check valves/ NRV**	
5.1	Body, cover, disc/piston & seat	SS 316
5.2	Design standard	MSS-99-2010/ Equivalent
5.3	Test standard	MSS-99-2010/ Equivalent
5.4	Size	15 NB
5.5	End Connections	Ferruled
5.6	Rating	2000 PSI
5.7	Valve operation	Manual
6.0	**Pressure relief valve**	
6.1	Type	Spring loaded, angle type
6.2	Body, bonnet, disc & nozzle	SS 316
6.3	Valve discharges to	Atmosphere (vent)
6.4	Back pressure	Constant
6.5	Set pressure	55 Kg/cm^2 (g) for skid 1 and 22 Kg/cm^2 (g) for skid 2
6.6	Inlet Connections	Ferruled
6.7	Outlet Connections	Ferruled
7.0	**Fittings**	SS-316
8.0	**Pressure Regulator**	
8.1	Quantity	Two per skid (total 8), each mounted to an oxygen cylinder
8.2	Body & trim	SS 316/Brass
8.3	Inlet connection	1/2 "
8.4	Outlet connection	1/2 "
8.5	Operating pressure	204 Kg/cm2(g)
8.6	Set outlet Pressure	50 Kg/cm^2(g) for skid dosing at CPU outlet and 20 Kg/cm^2(g) for skid dosing at deaerator outlet
9.0	**Mass Flow Controller**	
9.1	Expected Flow of O_2 in process	50-400 gm/ hr. (for skid dosing at deaerator outlet); 40-300 gm/ hr. (for skid dosing at CPU outlet)
9.2	MOC-wetted parts	SS 316
9.3	Operating pressure	Pressure reducing valve set pressure (refer P&IDs)
10.0	**Structural steel**	IS 2062
11.0	**Nuts & bolts**	SS 304

SECTION – IB
SPECIFIC TECHNICAL REQUIREMENTS (CONTROL & INSTRUMENTATION)

1. **The Contractor shall provide complete Instrumentation** for control, monitoring and operation of entire Oxygen Dosing System. The requirements given are to be read in conjunction with detailed Technical specification. Further, in case of any discrepancy in the requirement within the same section noted by the bidder in the specification, the same will be brought to the notice of BHEL in the form of pre bid clarification. In absence of any pre bid clarification, the more stringent requirement as per interpretation of customer shall prevail without any commercial and time implication.
2. Oxygen Dosing System shall be operated from DCS (BHEL's scope).
3. The quantity of instruments for the system shall be as per tender P & ID wherever provided of the respective system as a minimum, for bidding purpose. However, Bidder shall also include in his proposal all the instruments and devices that are needed for the completeness of the plant auxiliary system/ equipment supplied by the bidder, even if the same is not specifically appearing in the P & ID. During detail engineering if any additional instruments are required for safe & reliable operation of plant, bidder shall supply the same without any price implication.
4. Mass flow controller along with its accessories shall be in bidder's scope.
5. Cabling within the skid shall be prewired and terminated at skid mounted JB/Panel.
6. Redundancy of instruments /sensors shall be provided, irrespective of instrumentation shown in the PID, by bidder as follows: For important parameters which are concerning the safe operation of the generation units, triple redundancy shall be applied; for interlock and alarm signal, double redundancy shall be supplied.
7. Bidder to include all the fittings, root valves, accessories and valve manifolds required for the package instruments. All fittings shall use metric threads.
8. All instruments shall be terminated on JB/LCP in field, and both instrument and JB/LCP are in bidder scope.
9. The specifications for instruments/analysers mentioned in the specification are minimum requirements. All Datasheets of instrument/analyser shall be subject to customer/owner approval.
10. All transmitters & electronics items including JBs will be explosion proof / intrinsically safe as per hazardous area classification.
11. PG/PT and other instruments shall be compatible for oxygen application.
12. All transmitters shall be smart type and shall have 4-20mA DC signal with superimposed digital communication (HART). Each Temperature element shall be complemented with temperature transmitters, compensating cable, JB/rack & other erection hardware. All transmitters shall be fitted with a local analog /digital indicator displaying appropriate physical units which may be read clearly from an easily accessible position.
13. Instruments must have separate tapping lines. Sharing of the same tapping pipe for redundant instruments or various different instruments is not acceptable.
14. Instruments & its accessories shall be complied with weather of the Coastal Area.
15. As a general rule, measuring points and measuring equipment for critical protection shall be separate from and not combined with measuring equipment for the automatic control equipment.
16. The instrumentation and control equipment shall have high electro-magnetic and radio frequency interference immunity and shall not be affected by portable radio transmitters operated in the vicinity of the equipment. Any limitations shall be stated.
17. All instruments shall be protected by cases. The cases shall have enclosure classification not less than IP 42 according to EN 60529 when mounted indoors in totally enclosed rooms with provision for limited ingress of dust, IP 54 else in an enclosed building and IP 55W for mounting outdoors.
18. All the equipment's are to be provided as per ambient temperature of 45 degree Celsius. Electronic instruments shall not be located close to hot lines, vessels or other hot equipment. Even ambient temperatures exceeding 80 °C shall not result in calibration difficulties or rapid deterioration of electronic components.
19. The solenoid operated valves shall have limit switches for open/close feedback. Solenoid valves that do not exceed the drive control module power limit may be energized directly from the drive control module. The coils of the interposing relays shall be connected with freewheeling diodes.
20. All pneumatic operated regulating control valves (if any) shall be envisaged with smart positioner. (For detail please refer Cl. No. B0.6.19.15 under section IA-Customer's general technical specification – B0)
21. The junction boxes for termination of instruments /actuator limit switches/solenoid valve limit switches etc. are in bidder's scope. Number of Junction Boxes shall be sufficient and positioned in the field to minimize local cabling (max 10-12 mtrs) and trunk cable.
22. Bidder to note that all the transmitters/instruments supplied by Bidder shall be rack mounted. The racks shall be preassembled and provided by Bidder. Also no instruments / analyzers & JBs/Racks should be protruding on the walkway.
23. Instrument installation and accessories required and same shall be in Bidder's scope. The requirement indicated in the 'Instrument Installation Diagram', enclosed elsewhere in this specification, is minimal. Vendor submitted 'Instrument Installation Diagram' shall be subject to customer approval during detail engineering without any commercial and time implication. For instruments for which Installation Diagram is not attached, vendor's Installation Diagram for such items will also be subject to customer approval during detail engineering without any commercial and delivery implication.
24. Bidder to provide erection hardware including junction boxes, canopies, structural steel as required.
25. All field equipment including local instruments, transducers, valves, actuators, sensors, junction boxes and cabinets shall have nameplates with the instrument tag number anddescriptor in English language. The nameplates shall be fixed to the mounting plate, the mounting brackets or junction box. Loosely attached nameplates by wires are not acceptable. Label material and writing shall be selected to withstand the environmental conditions where they are mounted. The label size and fixing place shall be selected to allow easy reading.

26. The equipment shall be of modern, compact design incorporating the latest developments in proven technology. All instruments whether for local indication or remote transmission shall be of good quality and shall have an accuracy and repeatability appropriate to their duty.

27. Generally equipment shall be supplied from one composite range of measurements and control equipment as marketed by a reputable manufacturer of international standing and shall have a minimum of three years operational use on similar projects.

28. For codes & standards refer detailed specification. Indian standards are not acceptable. Chinese standards and Chinese material are also not acceptable.

29. Local representative of C&I related BOI supplier shall be available in India/Bangladesh.

30. The identification and numbering of equipment, systems, items, etc. of supply, as well as of all documents and drawings shall be in accordance with the VGB guideline RDSPP (Reference Designation System for Power Plants - KKS system).

31. Sea worthy packing capable of performing all necessary functions like prevention of damage to the contents, sufficient to support frequent handling and lengthy period of outdoor storage in adverse weather conditions are required.

32. Drawings/Documents and data to be furnished after award of the contract shall be inline with MDL furnished elsewhere in the specification.

33. Apart from specific design requirement for Oxygen Dosing System, Design of various systems/sub-systems and all equipment will also strictly meet the stipulation of Part B0 of customer technical specification.

34. All documents, including the installation and operation and maintenance manuals as well as the related software shall be in fluent, legible English. In addition, operation and maintenance manuals shall be translated into Bangla and provided as paper copies and in electronic format.

Notes:

- The above given scope is indicative & minimum. Any item/ equipment not indicated above however required for the completeness of the system is to be supplied by bidder without any technical, commercial and delivery implication to BHEL.
- Documents of C&I System shall be submitted to end user/owner for approval during detail engineering. Changes, if any, shall be accommodated by the bidder without any price/time implication.
- In case of any discrepancy in Section-C and Section-D of the specification, Section-C shall prevail.

SECTION – II
GENERAL TECHNICAL REQUIREMENT
GENERAL TECHNICAL REQUIREMENT (MECHANICAL)-IIA
GENERAL TECHNICAL REQUIREMENT (CONTROL AND INSTRUMENTATION)-IIB

SECTION – IIA

GENERAL TECHNICAL REQUIREMENT (MECHANICAL)

1.0 CODES AND STANDARDS

a) MSS-99-2010
b) ASTM G63: Guide for evaluating non-metallic materials for oxygen service.
c) ASTM G93: Standard Practice for Cleaning Methods and Cleanliness Levels for Material and Equipment Used in Oxygen-Enriched Environments.
d) ASTM G 94: std. guide for evaluating Metals for oxygen service.
e) ASTM F1792-97 (2010): Standard Specification for Special Requirements for Valves Used in Gaseous Oxygen Service.
f) ASTM G88: Standard Guide for Designing Systems for Oxygen Service.

The following philosophy oxygen dosing system is considered:-

2.0 SYSTEM DESCRIPTION

The objective of providing the dosing systems is to maintain the chemistry of the boiler feed water and also to comply with different modes of operation i.e. “Combined Water Treatment mode” during continuous plant operation and “Ammoniacal mode or AVT (O) mode” during start-up & shutdown conditions.

The chemical feed for Combined Water Treatment (CWT) involves the feed of only aqueous ammonia and gaseous oxygen.

The following philosophy of oxygen dosing is considered:-

a) **During normal operation:-**

- pH is maintained at 8.2-8.5 by dosing aqueous ammonia solution.
- Oxygen dosing rate recommended by BHEL is 30-150 ppb. Exact dosing rate shall be decided by the operator. For sizing of oxygen dosing system, 150 ppb continuous dosing of 99% pure oxygen has been considered.
- Dosing shall normally be done at CPU outlet. However provision shall be given for dosing at deaerator outlet also. For this purpose two separate skid based oxygen dosing systems shall be supplied for each unit. However, dosing shall be done at one place at a time only.
- Dosing rate shall be controlled from DCS by regulating mass flow controller (MFC) provided on each O_2 dosing skid under full load conditions based on dissolved oxygen level at economizer inlet. Oxygen dosing rate can be adjusted in the range of 30-150 ppb from DCS. However, **Customer** may also chose to manually feed a particular set point within this range and operate the oxygen dosing automatically based on this set point.
- The oxygen dosing shall automatically turn off by closing the mass flow controller (MFC), if cation conductivity in the cycle goes above 0.3 us/cm.

b) **Startup sequence:-**

- Deaerator vent is kept open.
- Ammonia is dosed at CPU outlet to achieve a pH of 9.2.
- Cation conductivity reaches below 0.15 µs/cm (at 25˚C) and the trend is downwards.
- Deaerator vents are closed.
- Oxygen feed is manually started from DCS.

c) **Shut down sequence:-**

- Oxygen feed needs to be stopped one hour before shut down and deaerator and LP heater vents needs to be opened.
- Ammonia dosing rate needs to be increased to achieve pH in the range of 9.2.

<u>Each skid shall consist of the following components:-</u>

4.1.1 <u>Cylinder banks</u>

Each oxygen dosing skid shall consist of eight oxygen cylinders, dosing at downstream of deaerator/CPU outlet. Oxygen cylinder bank is provided to cater seven days requirement. The automatic change-over of cylinder takes place on the basis of pressure i.e. the cylinder banks dosing at Condensate Polishing Unit (CPU) outlet will switch over at 47 kg/cm2(g) and the cylinder banks dosing at deaerator outlet at 17 kg/cm2(g).

4.1.2 Pressure Regulator:

The line pressure regulator is used for reducing a high supply pressure (204 bars cylinder pressure) to 50 kg/cm2(g) pressure in skid dosing at CPU outlet and to 20 kg/cm2(g) pressure in skid dosing at deaerator outlet.

4.1.3 Valves, tubing, vents and instrumentation shall be as per the enclosed P&ID and the data sheet. The MOC and specification of the equipment shall be as per the enclosed data sheet.

4.2 CONTROL PHILOSOPHY (OXYGEN DOSING SYSTEM)

The mode of operation of the oxygen dosing system shall be from Plant DCS only. All the logics, controls and interlocks shall be implemented in Plant DCS. Local manual intervention is not envisaged. Both manual/automatic controls shall be implemented in DCS. The provision to select “Auto” or “Manual” mode shall be provided in Plant DCS -OWS only.

The oxygen gas shall be at high pressure (204 Kg/cm2) in the cylinders. The same shall be brought to a lower pressure by the Pressure Regulator (set pressure of 50 Kg/cm2 for skid dosing at CPU outlet and set pressure of 22 Kg/cm2 for skid dosing at deaerator outlet attached with each cylinder.

Eight cylinders provided on skid are connected and four cylinder will serve at a time based on the pressure at the inlet of solenoid valve. In case the pressure at the inlet of SV1 reaches at the set point, the solenoid valve SV1 will close and solenoid vale SV2 will open and other cylinder shall be taken in to service provided the pressure at the inlet of SV2 is not low and vice versa. Alarm for pressure low at the inlet of solenoid valves shall be provided in DCS.

A pressure relief valve shall be fitted at the downstream of solenoid valve to relieve system pressure if the system pressure goes above set pressure.

The pressure of the oxygen shall be further reduced by pressure reducing valves for skid dosing at CPU outlet and skid dosing at deaerator outlet based on the feedback received from pressure transmitter {set point –“ADEQUATE--(Set points–48 kg/cm2 for skid dosing at CPU outlet & pressure transmitter {set point –“ADEQUATE--(20 kg/cm2 for skid dosing at deaerator outlet) provided at the downstream of pressure reducing regulating valve. The flow and pressure of oxygen can be monitored from DCS by the signal from mass flow controller for skid dosing at CPU outlet and for skid dosing at deaerator outlet and from pressure transmitters for skid dosing at CPU outlet & for skid dosing at deaerator outlet provided at the downstream of pressure reducing regulating valve. The flow of oxygen dosing will be controlled manually/automatically from DCS by adjusting flow MFC for skid dosing at CPU outlet & for skid dosing at deaerator outlet provided on skid, based on the feedback from the dissolved oxygen analyzer located in the economizer inlet. The MFC shall have a position feedback transmitter that shall transmit the feedback signal to Plant DCS.

All solenoid valves mounted in the oxygen dosing skid shall be of 24 VDC rating. All the field instruments, MFC and solenoid valves shall be terminated at a junction box in the skid by BHEL’s oxygen dosing vendor for further connection to Plant DCS. The cabling from JB to plant DCS shall be in BHEL scope. All the cabling within the skid shall be in scope of Vendor.

At each dosing point, viz. CPU outlet and deaerator outlet, an injection assembly containing 15 NB tubing, fixing collar, solenoid valve and NRV shall be supplied loose by oxygen dosing vendor and & erection/commissioning shall be done by BHEL.

The set points indicated below for operation of pressure reducing valve are tentative. Final value of the same shall be decided by oxygen dosing vendor during detailed engineering as per the requirement of the flow meter-cum-transmitter manufacturer.

For Skid dosing at CPU Outlet (CEP Discharge)

Source of signal	Tag Number	Set Point (suggested)	Interlock	Alarm in DCS	Remarks
During Normal Operation:-					
Pressure transmitter	PT (QCL11CP001)	55 Kg/cm2 (g) (HIGH)	Not applicable	Yes (HIGH pressure at cylinder 1 outlet)	Manual checking of pressure regulator reqd.
Pressure transmitter	PT (QCL11CP001)	47 Kg/cm2 (g) (LOW)	Close SV-1(QCL11AA201) & Open SV-2 (QCL12AA201)	Yes (LOW pressure at cylinder 1 outlet)	Auto-changeover of cylinders. Manually replace cylinder 1 with

					filled cylinder.
Pressure transmitter	PT (QCL12CP001)	55 Kg/cm2 (g) (HIGH)	Not applicable	Yes (HIGH pressure at cylinder 2 outlet)	Manual checking of pressure regulator reqd.
Pressure transmitter	PT (QCL12CP001)	47 Kg/cm2 (g) (LOW)	Close SV-2(QCL12AA201) & Open SV-1(QCL11AA201)	Yes (LOW pressure at cylinder 2 outlet)	Auto-changeover of cylinders. Manually replace cylinder 2 with filled cylinder.
Pressure transmitter	PT (QCL10CP001)	46 Kg/cm2 (g) (LOW)	Close MFC (QCL10AA202)	Yes (Oxygen dosing stopped due to low pressure)	
Pressure transmitter	PT (QCL10CP001)	50 Kg/cm2 (g) (HIGH)	Not applicable	Yes (HIGH dosing pressure)	Manual checking of pressure reducing valve reqd.
Pressure transmitter	PT (QCL10CP001)	48 Kg/cm2 (g) (Adequate)	Open Permissive pressure of MFC(QCL10AA202),	Not applicable	
Cation Conductivity analyzer	(SWAS PANEL SCOPE)	0.3 µs/cm (at 25˚C), increasing (HIGH)	Close MFC (QCL10AA202)	Yes (Oxygen dosing stopped due to high cation conductivity in feed water cycle)	Increase ammonia pH set point to raise pH to 9.2-9.5 range
Dissolved oxygen analyzer	(SWAS PANEL SCOPE)	30 ppb (LOW), decreasing	Gradually open MFC (QCL10AA202) to increase DO provided signal from PT (QCL10CP001) is "NOT LOW" (i.e < 45 Kg/cm2 (g))	Yes (Low DO level in feed water cycle)	Initial set point may be chosen as 90 ppb. However, provision may be kept to choose exact set point for operation by operator's plant chemist during commissioning within the range of 30-150 ppb.
Dissolved oxygen analyzer	(SWAS PANEL SCOPE)	150 ppb, increasing (HIGH)	Close MFC (QCL10AA202) to decrease DO	Yes (Oxygen dosing stopped due to high DO level in feed water cycle)	
During Start up:-					
Cation Conductivity analyzer	(SWAS PANEL SCOPE)	0.15 µs/cm (at 25˚C), decreasing (ADEQUATE)	Open MFC (QCL10AA202) , provided signal from PT-3 is "NOT LOW" (i.e < 46 Kg/cm2 (g)) & signal from DO analyzer is "NOT HIGH" (i.e > 150 ppb)	Yes (Oxygen dosing started)	

For Skid dosing at deaerator Outlet

Source of signal	Tag Number	Set Point (suggested)	Interlock	Alarm in DCS	Remarks
During Normal Operation:-					
Pressure transmitter	PT (QCL21CP001)	24 Kg/cm2 (g) (HIGH)	Not applicable	Yes (HIGH pressure at cylinder 1 outlet)	Manual checking of pressure regulator reqd.
Pressure transmitter	PT (QCL21CP001)	19 Kg/cm2 (g) (LOW)	Close SV-1(QCL21AA201) & Open SV-2 (QCL22AA201)	Yes (LOW pressure at cylinder 1 outlet)	Auto-changeover of cylinders. Manually replace cylinder 1 with filled cylinder.

Pressure transmitter	PT (QCL22CP001)	24 Kg/cm2 (g) (HIGH)	Not applicable	Yes (HIGH pressure at cylinder 2 outlet)	Manual checking of pressure regulator reqd.
Pressure transmitter	PT (QCL22CP001)	19 Kg/cm2 (g) (LOW)	Close SV-2 (QCL22AA201) & Open SV-1 (QCL21AA201)	Yes (LOW pressure at cylinder 2 outlet)	Auto-changeover of cylinders. Manually replace cylinder 2 with filled cylinder.
Pressure transmitter	PT (QCL20CP001)	18 Kg/cm2 (g) (LOW)	Close MFC (QCL20AA202)	Yes (Oxygen dosing stopped due to low pressure)	
Pressure transmitter	PT (QCL20CP001)	24 Kg/cm2 (g) (HIGH)	Not applicable	Yes (HIGH dosing pressure)	Manual checking of pressure reducing regulating valve reqd.
Pressure transmitter	PT (QCL20CP001)	20 Kg/cm2 (g) (Adequate)	Open Permissive pressure of MFC (QCL20AA202).	Not applicable	
Cation Conductivity analyzer	(SWAS PANEL SCOPE)	0.3 µs/cm (at 25˚C), increasing (HIGH)	Close MFC (QCL20AA202)	Yes (Oxygen dosing stopped due to high cation conductivity in feed water cycle)	Increase ammonia pH set point to raise pH to 9.2-9.5 range
Dissolved oxygen analyzer	(SWAS PANEL SCOPE)	30 ppb (LOW), decreasing	Gradually open MFC (QCL20AA202) to increase DO provided signal from PT(QCL20CP001) is "NOT LOW" (i.e < 18 Kg/cm2 (g))	Yes (Low DO level in feed water cycle)	Initial set point may be chosen as 90 ppb. However, provision may be kept to choose exact set point for operation by operator's plant chemist during commissioning within the range of 30-150 ppb.
Dissolved oxygen analyzer	(SWAS PANEL SCOPE)	150 ppb, increasing (HIGH)	Close MFC (QCL20AA202) to decrease DO	Yes (Oxygen dosing stopped due to high DO level in feed water cycle)	
<u>During Start up:-</u>					
Cation Conductivity analyzer	(SWAS PANEL SCOPE)	0.15 µs/cm (at 25˚C), decreasing (ADEQUATE)	Open MFC (QCL20AA202), provided signal from PT-3 is "NOT LOW" (i.e < 22 Kg/cm2 (g)) & signal from DO analyzer is "NOT HIGH" (i.e > 150 ppb)	Yes (Oxygen dosing started)	

SECTION – IIB

GENERAL TECHNICAL REQUIREMENT (CONTROL AND INSTRUMENTATION)

For the following instruments please refer specified clause no. in the specification under **Section-IA**- customer's General Technical Specification – B0:

Transmitters	-	B0.6.19.8
Pressure measurement	-	B0.6.19.10
Control Valves	-	B0.6.19.15
Solenoid Valves	-	B0.6.19.17
JB	-	B0.6.19.5

MEASURING INSTRUMENTS (PRIMARY AND SECONDARY)

1.0 Measuring instruments / equipment and subsystems offered by the Bidder shall be from reputed experienced manufacturers of specified type and range of equipment. The instrumentation vendor shall be subject to BHEL's / customer's approval. Further, all instruments shall be of proven reliability, accuracy, repeatability requiring a minimum of maintenance. All instrumentation equipment and accessories under this specification shall be furnished as per technical specifications, ranges, makes / numbers as approved by BHEL / customer during detailed engineering.

1.1 Every panel-mounted instrument, requiring power supply, shall be provided with a pair of easily replaceable glass cartridge fuses of suitable rating. Every instrument shall be provided with a grounding terminal and shall be suitably connected to the panel grounding bus.

1.2 All local gauges as well as transmitters, sensors and switches for parameters like pressure, temperature, level, flow etc. as required for the safe and efficient operation and maintenance under the scope of specification shall be provided. The necessary root valves, impulse piping, drain cock, gauge-zeroing cocks, valve manifolds and all the other accessories required for mounting / erection of these local instruments shall be furnished even if not specifically asked for. The proposal shall include the necessary cables, flexible conduits, junction boxes and accessories for the above purpose. Double root valves shall be provided for all pressure tapping where the pressure exceeds 40 Kg / Cm^2.

1.3 Instruments envisaged for sea water application shall be provided with wetted parts made of Monel / Hastelloy C.

1.4 All instruments shall be provided with durable epoxy coating for housing and all exposed surfaces of the instruments.

1.5 Specification for Pr. Gauge, D.P. Gauge, Temp. Gauge and Level Gauge

Sl. No.	Features	Essential / Minimum Requirements		
		Pr. Gauge / D.P. Gauge	**Temp. Gauge**	**Level Gauge**
1	Sensing Element and Material	Bourdon for high pressure, Diaphragm / Bellow for low pr. of 316 SS	Mercury in steel below 450 Deg.C and inert gas actuated for above 450 Deg.C of SS bulb and capillary	Tempered toughened Borosilicate gauge glass steel armoured reflex or transparent type.
2	Body material	Die-cast aluminium	Die-cast aluminium	Forged carbon steel / 304 SS
3	Dial size	150 mm	150 mm	Tubular covering entire range.
4	End connection	½ inch NPT (M)	¾ inch NPT (M)	Process connection as per ASME PTC and drain / vent 15 NB.
5	Accuracy	±1% of span	±1% of span	±2%
6	Scale	Linear, 270 Deg. Arc graduated in metric units.	Linear, 270 Deg. Arc graduated in Deg. C	Linear vertical
7	Range selection	Cover 125% of max. of scale	Cover 125% of max. of scale	Cover 125% of max. of scale
8	Over range test	Test pr. For the assembly shall be 1.5 to the max. design pr. at 38 Deg. C.		
9	Housing	Weather and dust proof as per IP-55	Weather and dust proof as per IP-55	CS/304 SS leak proof
10	Zero / Span adjustment	Provided	Provided	--
11	Identification	Engraved with service legend or engraved phenolic laminated tag plate	Engraved with service legend or laminated phenolic name plate	Engraved with service legend or laminated phenolic name plate
12	Accessories	Blow out disc, siphon, snubber, pulsation dampener, chemical seal (if required by process) gauge isolation valve	SS Thermowell	Gasket for all KEL-F shield for transparent type vent and drain valves of Steel / SS as per CS / Alloy process requirement.
13	Material of Bourdon movement	316 SS / 304 SS	316 SS / 304 SS	

(a) For head mounted and DIN-rail mounted

Accuracy (Refer types note 2)

RTD =<0.4% of 0-250 deg C. span

T/C-K type =<0.4% of 0-600 deg C. span

T/C-R type =<0.4% of 0-1000 deg C. Span

CJC accuracy (for thermocouples) shall be =<1 deg.

(b) For dual input type:

RTD =<0.25% of 0-250 deg C. Span

T/C-K type =<0.2% of 0-600 deg.C span

CJC accuracy (for thermocouples) shall be =< 1 deg. C.

Notes:

1. In case of failure (open or burn-out) of RTD/thermocouple, temp. transmitter shall provide low temperature output.

2. Composite Accuracy is to be calculated as summation of all applicable accuracies of temp. transmitter, for converting sensor input to output in 4-20 mA (e.g. basic accuracy, digital accuracy, D/A accuracy. etc.) and temperature effect on these accuracies at ambient temperature of 50 deg. C. based on the figure / formula given in the standard product catalogue for span as specified above for various types of Temperature Elements specified. All such accuracy/temperature effect figures in catalogue shall be first converted to deg. C, and then percentage of these converted accuracy in specified span shall be calculated to compare with the specified composite accuracy figures.

1.11 SPECIFICATION FOR ELECTRONIC TRANSMITTER FOR PRESSURE, D.P., FLOW AND LEVEL ELECTRONIC TRANSMITTERS:

Sr. No.	Features	Essential/Minimum Requirements
1.	Type of Transmitter	Microprocessor based 2 wire type, Hart protocol compatible.
2.	Accuracy	± 0.1% of calibrated span (minimum)
3.	Output signal range	4-20 mA DC (Analog) along with superimposed digital signal based on HART protocol
4.	Turn down ratio	10:1 for vacuum/very low pressure applications. 30:1 for other applications.

5.	Stability	± 0.1% of calibrated span for six months for Ranges up to and including70 Kg/cm².
		± 0.25% of calibrated span for six months for Ranges more than 70 Kg/cm² (g).
6.	Zero and span drift	+/- 0.015% per deg.C at max span. +/-0.11% per deg.C at min. span.
7.	Load impedance	500 ohm (min.)
8.	Housing	Weather proof as per IP-55 with durable corrosion resistant Coating.
9.	Over Pressure	150% of max. Operating pressure
10.	Connection (Electrical)	Plug and socket type
11.	Process connection	1/2 inch NPT (F)
12.	Span and Zero	Continuous, tamper proof, Remote as well as adjustability Manual from instrument with zero suppression and elevation facility.
13.	Accessories	-Diaphragm seal, pulsation dampeners, siphon etc. as required by service and operating condition.
		-2 valve manifold for absolute pressure transmitters (3-valve manifold for gauge/ vacuum pressure transmitters) and 5 valve manifold for DP/level/flow transmitters.
		-For hazardous area, explosions proof enclosure as described in NEC article 500.
14.	Diagnostics	Self Indicating feature
15.	Power supply	24V DC ± 10%.
16.	Adjustment/calibration/	Centralized PC based system.

Notes :

In case it becomes necessary to use a DP transmitter for pressure measurement then a 3-valve manifold should be used in place of 2-valve manifold.

LVDT type is not acceptable.

Where the process fluids are corrosive, viscous, solid bearing or slurry type, diaphragm seals shall be provided. Parts below the diaphragm shall be removable for cleaning. The entire volume above the diaphragm shall be completely filled with an inert liquid suitable for the application.

1.18 SOLENOID VALVES

1.	Type	Single/Double coil type, corrosion resistant type
2.	Body	SS316
3.	Internals	SS316
4.	Spring	SS316
5.	Size	½inch
6.	Class of insulation	H
7.	Electrical connection	24 V DC from BOP-DCS
8.	Connectivity	Connectivity with BOP-DCS required for operation
9.	Protection Class	IP-65

1.19 ELECTRONIC FLOW METER

The electronic flow meter shall include flow sensor and flow indicator cum integrator / totaliser and shall include all required accessories for satisfactory operation. The flow meter shall be based on full bore ultrasonic / electromagnetic principle and shall be electronic type of proven design, make and model acceptable to the owner. The Bidder shall submit all necessary technical literature and details of selection criteria of the instrument offered to substantiate the model selected. The Bidder shall also furnish list of similar installation along with feedback on satisfactory performance of the instruments. The flow meter shall meet or exceed the following requirement:

(a)	Output	:	4-20 mA DC Isolated output
(b)	Accuracy	:	± 0.5% of calibrated span or better *
(c)	Repeatability	:	± 0.2% of calibrated span or better
(d)	Ambient Temp. & Humidity	:	4 deg.C to 55 deg.C. 5% to 100% RH
(e)	Power Supply	:	240V AC ± 10%, 50 HZ ± 5%/ 24 V DC, to be arrangec by the contractor.
(f)	Protection class	:	IP-55
(g)	Flow tube		SS304
(h)	liner		Hard Rubber

The flow meter shall provide local indication for instantaneous flow. It should also be possible to get local display for daily and monthly discharge. The flow meter shall indicate totaliser / integrator to get the daily and monthly discharge as stated above.

1.20 LIMIT SWITCH

For offsite plant application, Limit switches shall be gold plated with high conductivity and non-corrosive type. Contact rating shall be sufficient to meet the requirement of DDCMIS subject to a minimum of 60 V, 6 VA rating. Protection class shall be IP 55.

FORM NO. PEM-6666-0

BHEL PEM	DATA SHEET FOR MASS FLOW CONTROLLER FOR OXYGEN DOSING	SPECIFICATION NO.: PE-SS-999-145-I012	
		VOLUME	
		SECTION	
		REV. NO. 00	DATE : 01.10.2015
		SHEET 1 OF 1	

Tag No. : …….. Qty.: ……

Date Sheet No. PE-DS-999-145-I012

DATA SHEET – A & B

	DATA SHEET – A FOR MASS FLOW CONTROLLER (TO BE FILLED BY PURCHASER)		DATA SHEET – B (TO BE FILLED UP BY BIDDER)
GENERAL	PROJECT	_____	……
	MAKE/MODEL NUMBER	_____	……
	TYPE	_____	……
	SERVICE	99% PURE OXYGEN	……
TECHNICAL	PRINCIPLE	□ CORIOLIS □ THERMAL MASS FLOW □ OTHER	……
	MATERIAL OF CONSTRUCTION		……
	a) BODY	□ DIE CAST AL (MINIMUM) □ ___	……
	b) WETTED PARTS	■ SS □ ___	……
	POWER SUPPLY	□ 24V DC □ 230V AC	……
	INPUT SIGNAL	4-20 mA	……
	OUTPUT SIGNAL	4-20 mA for Mass Flow Rate (Selectable for other measured quantities)	……
	ACCURACY (on FSD)	□ ±1% □ ___	……
	LINEARITY	□ ±1% □ ___	……
	HYSTERESIS	□ ±1% □ ___	……
	REPEATABILITY	□ ±0.2% □ ___	……
	TURN DOWN RATIO	□ 50:1 □ ___	……
	RESPONSE TIME	□ 100 mSec □ ___	……
	PROCESS CONNECTION	□ ½" NPT (M) □ □ ½" FLANGED	……
	MOUNTING/ INSTALLATION DETAIL	BIDDER TO FURNISH	……
	ENCLOSURE	□ IP-65 □ ___	……
	REVERSE POLARITY PROTECTION	□ PROVIDED □ ___	……
	MEASURED SIGNAL (AS MINIMUM)	■ MASS FLOW RATE □ TOTAL MASS FLOW □ TEMPERATURE □ DENSITY	……
	TAG PLATE MATERIAL	□ STAINLESS STEEL □ ___	……
	ACCESSORIES	BIDDER TO SPECIFY	……
	CABLE ENTRY DETAILS/QTY.	BIDDER TO FURNISH	……

SERVICE CONDITION	SL. No.	DOSING LOCATION	OPERATING PRESSURE	DESIGN PRESSURE	OPERATING TEMP	DESIGN TEMP	FLOW RANGE	FLOW RATE	MAX OPERATING TEMP
	1.	AT DEA O/L AT CPU O/L							

NAME	GYANENDRA AWASTHI/ DY. ENGR	M.A. MANSOORI/ DGM	DIPESH PALIT/ DH-C&I	NAME
SIGNATURE				SIGNATURE
DATE	9/10/15	9/10/15	9/10/15	DATE

INSTRUMENT STUB DETAILS

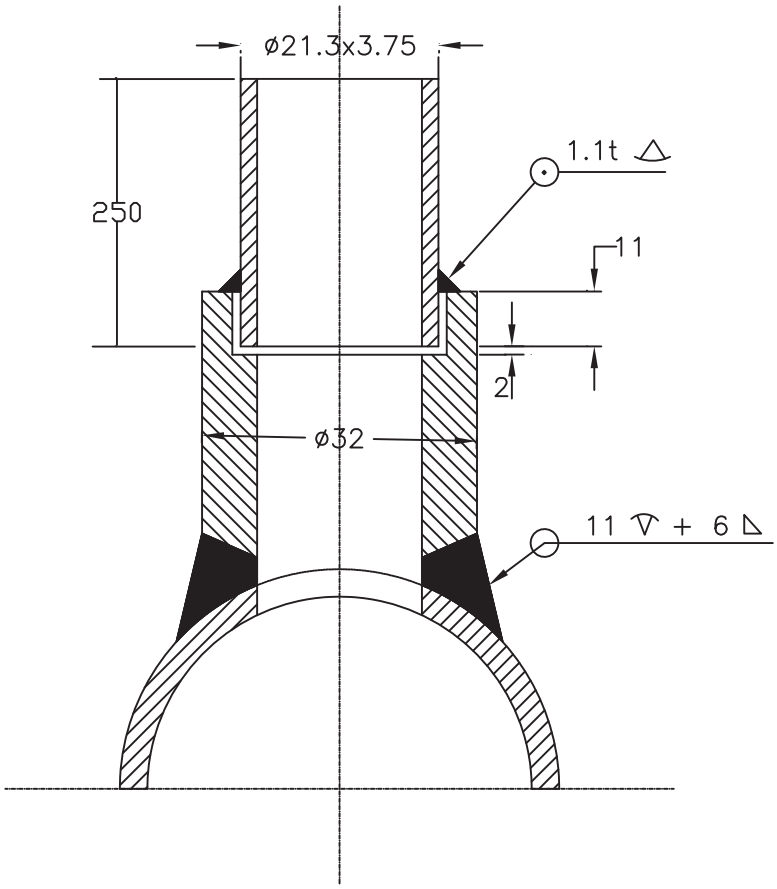

NOTE :

1. MATERIAL OF THE BOSS AND NIPPLE SHALL BE THE SAME AS THE PIPE INTO WHICH IT IS WELDED AND CONFORM TO ANSI B16.11.
2. THE LENGTH OF NIPPLE SHOULD BE 250 MM.
3. STUB LENGTH SHALL BE 64mm UPTO 200Nb PIPE, 45mm ABOVE 200Nb PIPE SIZE.
4. STUB AND NIPPLE SHALL HAVE IBR CERTIFICATION, AS APPLICABLE, ACCORDING TO PROCESS DATA

बीएचईएल BHEL	TITLE : INSTRUMENT STUB DETAILS FOR PRESSURE MEASUREMENT (SYSTEM PRESS UPTO 40Kg/Cm2, CLASS 3000#)	DRG. NO. REV. 00

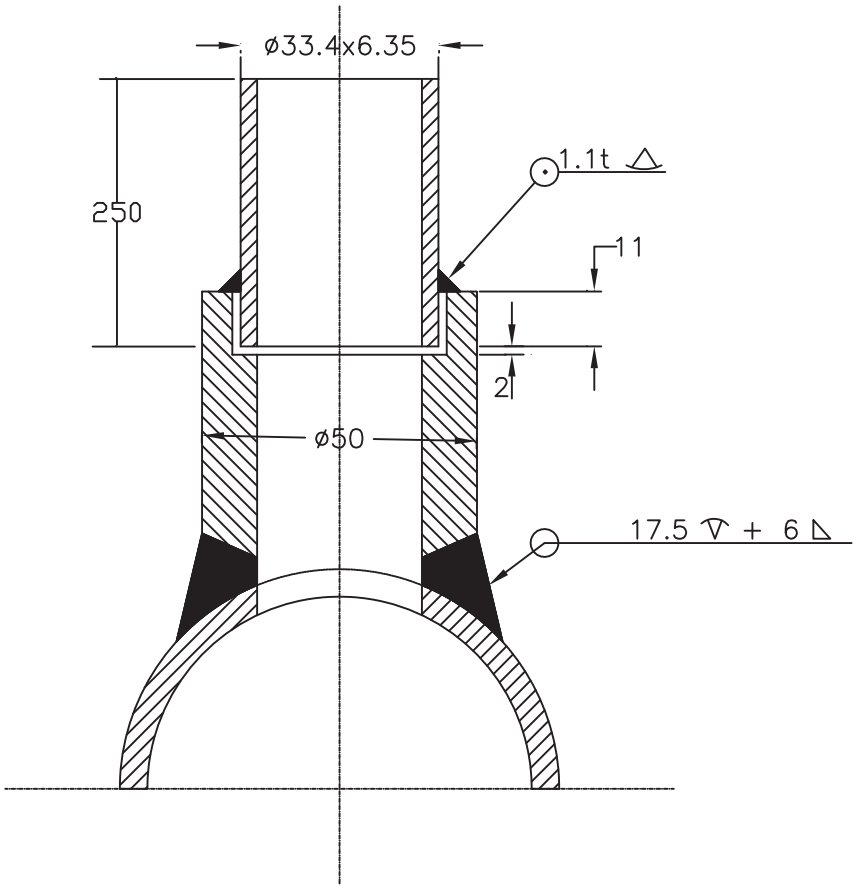

NOTE :

1. MATERIAL OF THE BOSS AND NIPPLE SHALL BE THE SAME AS THE PIPE INTO WHICH IT IS WELDED AND CONFORM TO ANSI B16.11.
2. THE LENGTH OF NIPPLE SHOPULD BE 250 MM.
3. STUB LENGTH SHALL BE 64mm UPTO 200Nb PIPE, 45mm ABOVE 200Nb PIPE SIZE.
4. STUB AND NIPPLE SHALL HAVE IBR CERTIFICATION, AS APPLICABLE, ACCORDING TO PROCESS DATA

बीएचईएल BHEL	TITLE : INSTRUMENT STUB DETAILS FOR PRESSURE MEASUREMENT (SYSTEM PRESS > 40Kg/Cm2, CLASS 6000#)	DRG. NO. REV. 00

INSTRUMENTS CHECK LIST

Important notes for Quality assurance and checks shall be as follows:

1) The requirement indicated in the check list is minimal. Vender has to submit Quality Plans/ Checklists for addressing the minimal requirement indicated in the check list and also those indicated under **clause B0.7** in the specification under **Section-IA**- customer's General Technical Specification – B0, as relevant to instruments. Vendor submitted quality plans shall be subject to customer approval during detail engineering without any commercial and time implication. For instruments for which checklist is not attached, vendor's Quality Plan for such items will also be subject to customer approval during detail engineering without any commercial and delivery implication.

2) The inspection agencies indicated in the Checklists in specification may be ignored. These will be aligned in line with approved Inspection categorisation plan during detail engineering without any commercial and delivery implication.

STANDARD CHECK LIST FOR C&I INSTRUMENTS

CHECK LIST FOR ANNUNCIATORS

Sl. No.	Test / Checks	Quantum of check	Reference Doc. / Acceptance Norms	Agency **			Remarks
				M	C	B	
1	CHECK FOR	SEE NOTE-1 BELOW	APPROVED SPEC./ DATA SHEETS	P	W	V	
	TYPE/ MODEL						
	DIMENSIONS OF HARDWARE						
	MODULARITY						
	SEQUENCE						
	FACIA DETAILS						
2	FUNCTIONAL TEST	100%		P	W	V	
3	IMMUNE TO STEP VARIATIONS IN THE POWER SUPPLY	SEE NOTE-1 BELOW		P	W	V	
4	DEGREE OF PROTECTION FOR ENCLOSURE	TYPE TEST		P	W	V	
5	I/R CHECK	SEE NOTE-1 BELOW		P	W	V	
6	RESPONSE			P	W	V	

Legend :

** M = Manufacturer / Sub-contractor, C = Contractor / Nominated Inspecting Agency, B = BHEL,
P = Perform, W = Witness, V = Verification

Note :

1. Quantum of check shall be as below :
   100 % - By Manufacturer
2. Manufacturer to maintain calibrated instrument having better accuracy than the item under test. Inspecting engineer shall check the same.
3. Manufacturer to carry out ROUTINE TEST on 100 %.
4. Contractor to provide compliance certificate for tests/checks verifid by contractor and submit the same alongwith test certificates to be verified by BHEL.

STANDARD CHECK LIST FOR C&I INSTRUMENTS

CHECK LIST FOR TRANSMITTER

Sl. No.	Test / Checks	Quantum of check	Reference Doc. / Acceptance Norms	Agency **			Remarks
				M	C	B	
1	CHECKS FOR	SEE NOTE-1 BELOW	APPROVED SPEC./ DATA SHEETS	P	W	V	
	VISUAL.						
	MODEL/TAG No						
2	PROCESS CONNECTION			P	W	V	
3	ACCURACY			P	W	V	
4	REPEATABILITY			P	W	V	
5	HYSTERESIS			P	W	V	
6	EFFECT OF TEMP VARIATION ON ACCURACY			P	W	V	
7	SPAN / ZERO ADJUSTMENT	ONE / TYPE		P	W	V	
8	EFFECT OF SUPPLY VOLTAGE VARIATION			P	W	V	
9	EFFECT OF LOADING (500 OHM METERS)			P	W	V	
10	HIGH PRESSURE TEST	SEE NOTE-1 BELOW		P	W	V	
11	BURN-IN TEST	ONE / TYPE		P	W	V	
12	DEGREE OF PROTECTION			P	W	V	
13	ACCESSORIES AS APPLICABLE	SEE NOTE-1 BELOW		V	V	V	

Legend :

** M = Manufacturer / Sub-contractor, C = Contractor / Nominated Inspecting Agency, B = BHEL,
P = Perform, W = Witness, V = Verification

Note :

1. Quantum of check shall be as below :
   100 % - By Manufacturer
2. Manufacturer to maintain calibrated instrument having better accuracy than the item under test. Inspecting engineer shall check the same.
3. When material corelation are not available manufacturer's compliance to be provided.
4. Contractor to provide compliance certificate for tests/checks verifid by contractor and submit the same alongwith test certificates to be verified by BHEL.

STANDARD CHECK LIST FOR C&I INSTRUMENTS

CHECK LIST FOR SOLENOID VALVES

Sl. No.	Test / Checks	Quantum of check	Reference Doc. / Acceptance Norms	Agency **			Remarks
				M	C	B	
1	CHECK FOR	SEE NOTE-1 BELOW	APPROVED SPEC./ DATA SHEETS	P	W	V	
	TYPE						
	MAKE						
	MODEL No.						
2	MATERIAL (BODY. PLUNGER/TRIM)			P	W	V	
3	PORT SIZE			P	W	V	
4	CABLE CONNECTION SIZE			P	W	V	
5	ENCLOSURE CLASS			P	W	V	TYPE TEST CERTIFICATE TO BE FURNISHED BY VENDOR
6	No. OF COILS & INSULATION CLASS			P	W	V	TEST CERTIFICATE TO BE FURNISHED FOR INSULATION CLASS BY VENDOR
7	POWER SUPPLY CHECK			P	W	V	
8	IR / HV TEST			P	W	V	
9	FUCTIONAL TEST			P	W	V	

Legend :

** M = Manufacturer / Sub-contractor, C = Contractor / Nominated Inspecting Agency, B = BHEL, P = Perform, W = Witness, V = Verification

Note :

1. Quantum of check shall be as below :
   100 % - By Manufacturer
2. Manufacturer to maintain calibrated instrument having better accuracy than the item under test. Inspecting engineer shall check the same.
3. Contractor to provide compliance certificate for tests/checks verifid by contractor and submit the same alongwith test certificates to be verified by BHEL.

STANDARD CHECK LIST FOR C&I INSTRUMENTS

CHECK LIST FOR PRESSURE & DP GAUGE

Sl. No.	Test / Checks	Quantum of check	Reference Doc. / Acceptance Norms	Agency **			Remarks
				M	C	B	
1	CHECK FOR	SEE NOTE-1 BELOW	APPROVED SPEC./ DATA SHEETS	P	W	V	
	SENSOR TYPE						
	DIAL SIZE						
	MODEL NO/TAG NO						
	RANGE/SCALE						
	SWITCH CONTACT RATING & NOS.						
	END CONNECTION						
2	CALIBRATION			P	W	V	
	ACCURACY						
	REPEATABILITY						
	SET POINT ADJUSTMENT						
3	OVER PRESSURE & LEAK TEST			P	W	V	
4	OPERATION OF PRESSURE. RELIEF DEVICE	ONE		P	W	V	
5	REVIEW OF TC FOR	FOR LOT		V	V	V	
	MATERIALS OF SENSOR						
	MOVEMENT						
	PROCESS CONNECTION						
	HOUSING						
6	REVIEW OF TC FOR DEGREE OF PROTECTION	TYPE TEST		V	V	V	
7	ACCESSORIES AS APPLICABLE	SEE NOTE-1 BELOW		V	V	V	

Legend :

** M = Manufacturer / Sub-contractor, C = Contractor / Nominated Inspecting Agency, B = BHEL,
P = Perform, W = Witness, V = Verification

Note :

1. Quantum of check shall be as below :
   100 % - By Manufacturer
2. Manufacturer to maintain calibrated instrument having better accuracy than the item under test. Inspecting engineer shall check the same.
3. Manufacturer to carry out ROUTINE TEST on 100 %.
4. When material corelation is not available, MFR's compliance to be provided
5. Contractor to provide compliance certificate for tests/checks verifid by contractor and submit the same alongwith test certificates to be verified by BHEL.

APPLICABLE CODES & STANDARDS
(Refer B0.6.2)

Please refer clause no. B0.6.2 in the specification under **Section-IA**- customer's General Technical Specification – B0 for applicable codes and standard.

INSTRUMENT INSTALLATION DIAGRAM

COPY RIGHT AND CONFIDENTIAL
The information on this document is the property of Bharat Heavy Electricals Limited.
It must not be used directly or indirectly in anyway detrimental to the interest to the Company.

INSTALLATION NOTES

01. HORIZONTAL PIPE RUNS SHALL HAVE A SLOPE OF 50 MM'S IN ONE METER

02. LEGEND/ABBREVATIONS USED IN THE INSTALLATION SCHEMES.

- A/R : AS REQUIRED
- PT : PRESSURE TRANSMITTER
- DPT : DIFFERENTIAL PRESSURE TRANSMITTER (FT or LT or DPT type).
- DFDC : DOUBLE FERRULE DOUBLE COMPRESSION
- INST : INSTRUMENT

03. DRAIN PIPE INSIDE LIE / LIR SHALL BE OF A106 Gr. C- 2" NB Sch. 80 ALONGWITH WITH SUITABLE ADAPTER / ELBOW ON ONE SIDE & CAP ON OTHER SIDE.

04. DRAIN FROM LIE / LIR SHALL BE CONNECTED TO NEAREST PLANT DRAIN THROUGH OPEN FUNNEL (1/2" SIZE).

COPY RIGHT AND CONFIDENTIAL
The information on this document is the property of Bharat Heavy Electricals Limited.
It must not be used directly or indirectly in anyway detrimental to the interest to the Company.

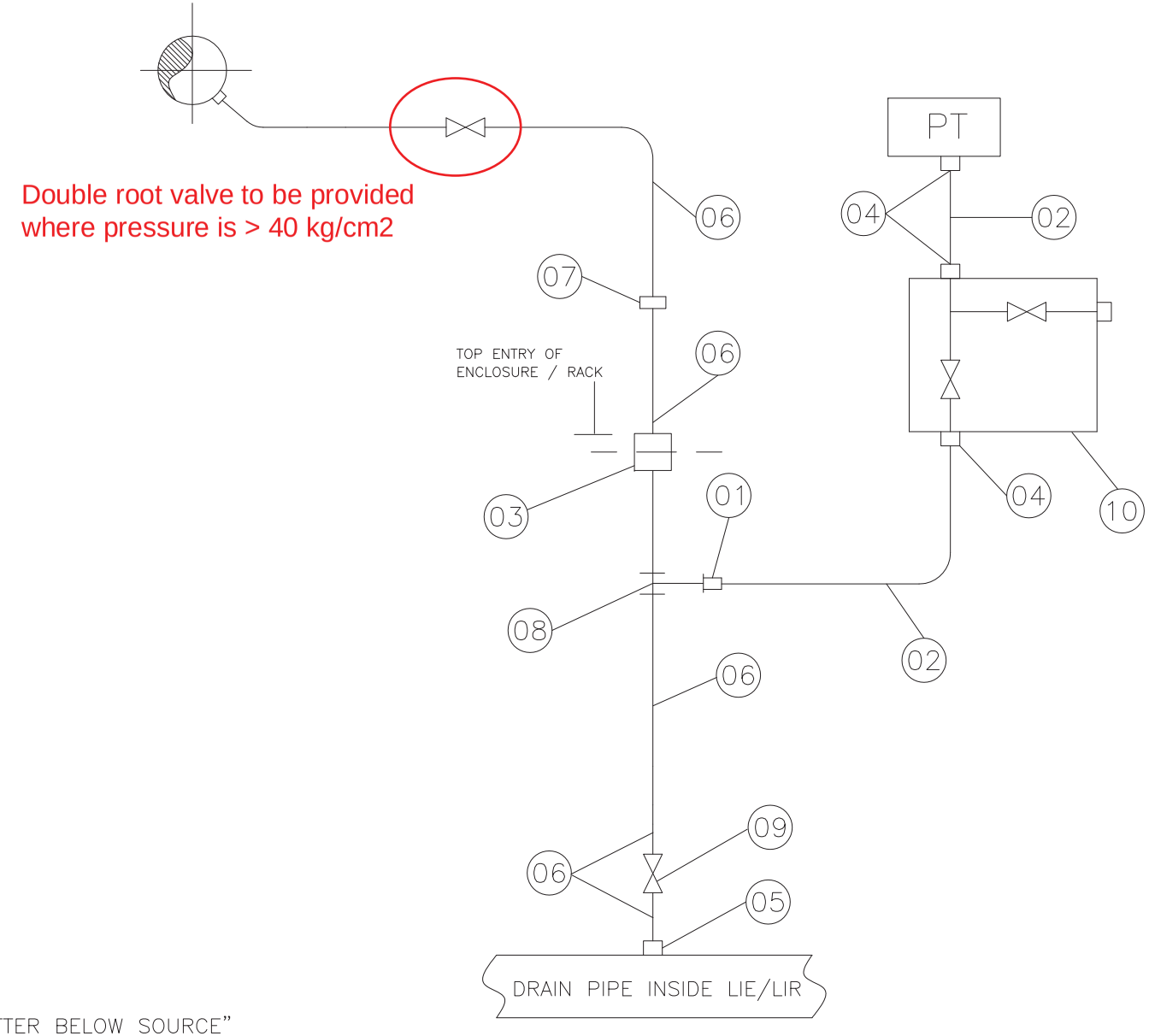

NOTE:

1. " TRANSMITTER BELOW SOURCE"
2. FOR BILL OF MATERIAL REFER NEXT PAGE

428

A4 - 11

PE-DG-421-145-I555

REV. NO. 00

PAGE :

ITEM NO.	ITEM DESCRIPTION	QTY/INST.
10	TWO VALVE MANIFOLD WITH VENT PLUG PORT SIZE : 1/2" NPTF / MATL : SS316 PR. TESTING : 3000PSI	01
09	FORGED GLOBE VALVE BODY : ASTM A105 SIZE : 1/2" NB-SW / CL : 800	01
08	FORGED TEE / AS PER ANSI B16.11 MATL. : ASTM A105 SIZE : 1/2" NB-SW / CL : 3000	01
07	FORGED COUPLING / AS PER ANSI B16.11 MATL : ASTM A105 SIZE : 1/2" NB-SW / CL. 3000	A/R
06	IMPULSE PIPE MATL : ASTM A106 Gr. C SIZE : 1/2" NB-SCH 80	A/R
05	HALF COUPLING / 1/2" NB-SW /AS PER ANSI B16.11 MATL : ASTM A105 /CL. 3000	01
04	TUBE FITTING / DFDC MATL. : SS316 SIZE : 1/2" NPTM X TO SUIT 1/2" OD SS TUBE	03
03	BULK HEAD UNION / COUPLING CL : 3000 LBS / 1/2" NB-SW MATL : ASTM A105/AS PER ANSI B16.11	1No.
02	TUBE / MATL. : SS316 ASTM A 213 TP 316 H SIZE : 1/2" OD X 2.1 mm THK.	A/R
01	TEE TUBE UNION / MATL. : SS316 SIZE : OD OF 1/2" NB – PIPE X TO SUIT TO 1/2" OD SS TUBE	01

COPY RIGHT AND CONFIDENTIAL
The information on this document is the property of Bharat Heavy Electricals Limited.
It must not be used directly or indirectly in anyway detrimental to the interest to the Company.

COPY RIGHT AND CONFIDENTIAL
The information on this document is the property of Bharat Heavy Electricals Limited.
It must not be used directly or indirectly in anyway detrimental to the interest to the Company.

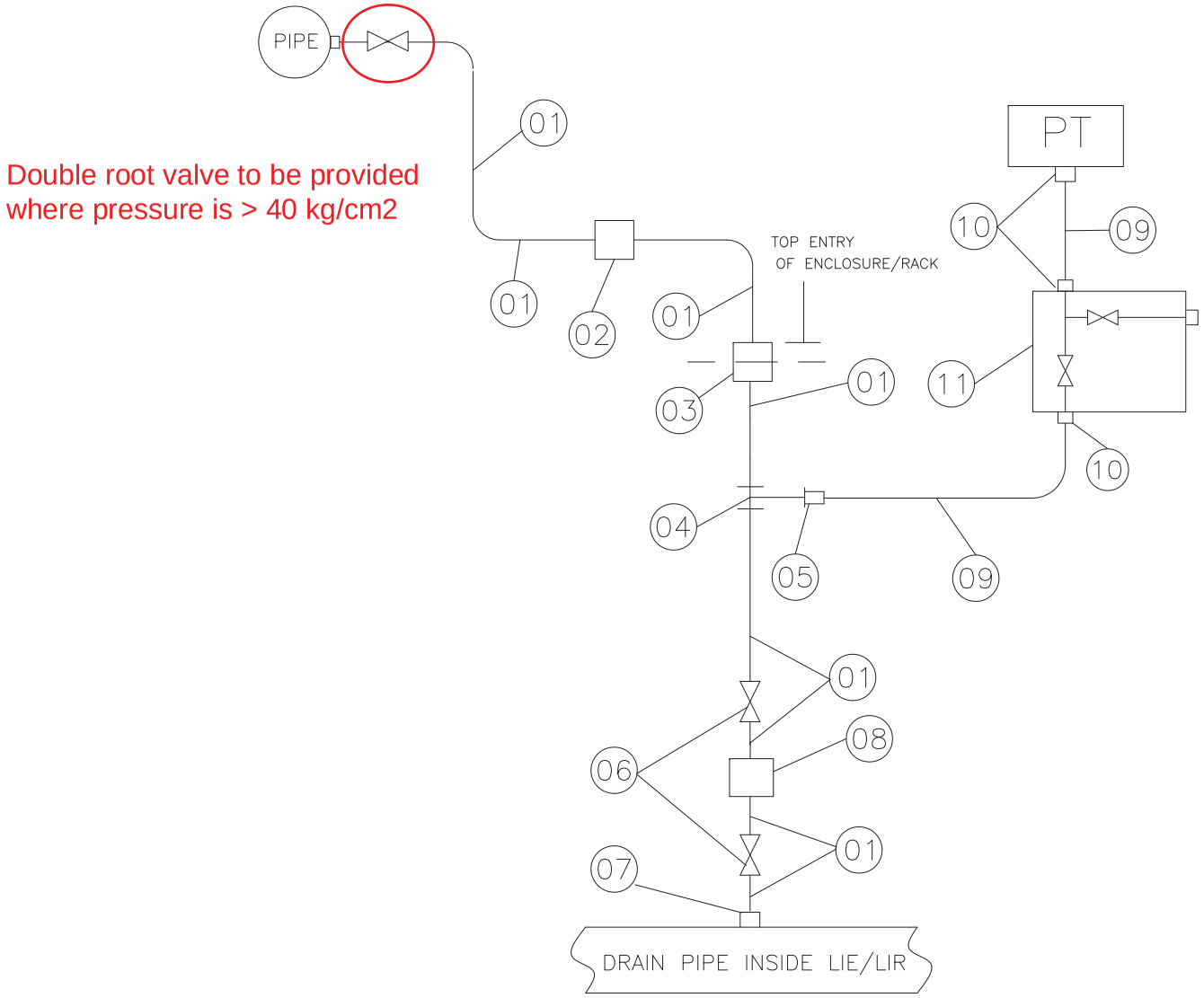

NOTE:

1. " TRANSMITTER BELOW SOURCE"
2. FOR BILL OF MATERIAL REFER NEXT PAGE

A4 – 11

PE-DG-421-145-I555

REV. NO. 00

PAGE

ITEM NO.	ITEM DESCRIPTION	QTY/INST.
11	TWO VALVE MANIFOLD + VENT PLUG / PR.TESTING: 3000 PSI MATL. : SS316, PORT SIZE : 1/2" NPTF	01
10	TUBE FITTING/DFDC/, MATL. : SS316 SIZE : 1/2" NPTM x TO SUIT 1/2" OD SS TUBE.	03
09	TUBE MATL. : ASTM A213 TP 316 H SIZE : 1/2" OD x 1.13 mm THK.	A/R
08	DRAIN POT: 2" NB Sch 80 BODY: A106 Gr. C / CONN. 3/4" NB – SW	01
07	HALF COUPLING / 3/4" NB–SW /AS PER ANSI B16.11 MATL : ASTM A105 /CL. 3000	01
06	GLOBE VALVE / CL. 800 SIZE : 3/4" NB–SW BODY: ASTM A105	02
05	TEE TUBE UNION; MATL. : SS316 SIZE : OD OF 3/4" NB PIPE x SUIT TO 1/2" OD – TUBE RATING : 3000	01
04	FORGED EQUAL TEE/AS PER ANSI B16.11/RATING : CL 3000 SIZE : 3/4" NB–SW ; MATL. : ASTM A105	01
03	FORGED BULK HEAD UNION / AS PER ANSI B16.11 RATING : ANSI CL. 3000 SIZE : 3/4" NB – SW/MATL. : ASTM A105	01
02	FORGED COUPLING/AS PER ANSI B16.11 SIZE : 3/4" NB – SW / RATING : ANSI CL 3000 MATL. : ASTM A105	A/R
01	IMPULSE PIPE; SIZE : 3/4" NB – SCH 80 MATL. : ASTM A106 Gr. C	A/R

COPY RIGHT AND CONFIDENTIAL
The information on this document is the property of Bharat Heavy Electricals Limited.
It must not be used directly or indirectly in anyway detrimental to the interest to the Company.

COPY RIGHT AND CONFIDENTIAL
The information on this document is the property of Bharat Heavy Electricals Limited.
It must not be used directly or indirectly in anyway detrimental to the interest to the Company.

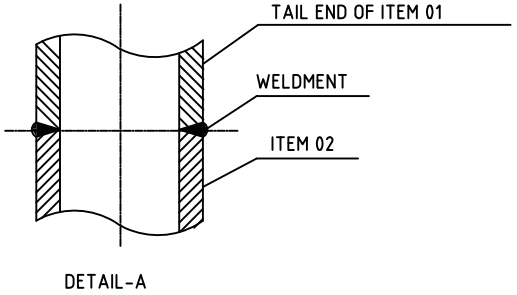

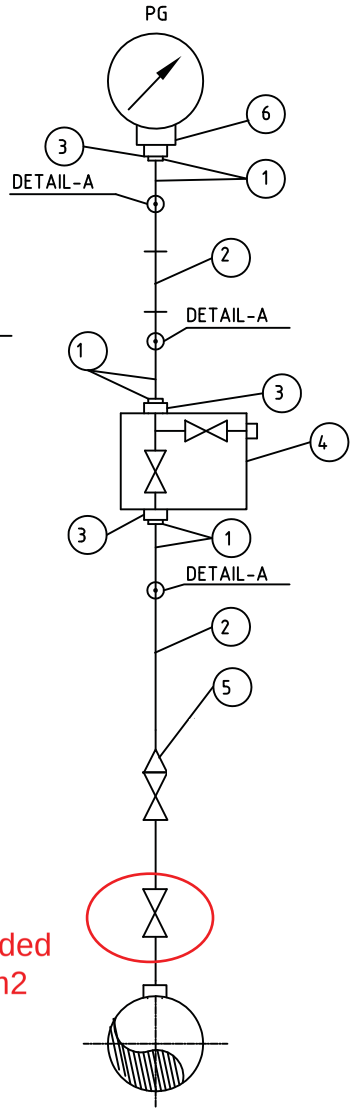

Double root valve to be provided where pressure is > 40 kg/cm2

ITEM No.	ITEM DESCRIPTION	QUANTITY/INST. (Nos.)
1	NUT & TAIL FITTING + COPPER WASHERS MATL : ASTM A105 / SIZE: NUT : 3/4" BSPF TAIL : ID= 9 mm / OD= 19 mm	03
2	IMPULSE PIPE SIZE : 1/2" NB - SCH 160 MATL : ASTM A106 Gr.C	A/R
3	ADAPTER MATL:ASTM A105 SIZE : 1/2" NPTM x 3/4" BSPM	03
4	TWO VALVE VALVE MANIFOLD+VENT PLUG RATING : 6000 LBS/ MATL: SS304 PORT CONNECTION : 1/2" NPTF	01
5	FORGED REDUCER/ RATING CL. 6000LBS SIZE: OD of 1" NB x 1/2" NB-SW/AS PER ANSI B16.11 SMATL : ASTM A105	01
6 ##	SNUBBER MATL. ASTM A105 SIZE : 1/2" NPTM X 1/2" NPTF FLOW DIRECTION- 1/2" NPTF TO 1/2" NPTM	01

ONLY FOR SERVICES WITH PULSATING FLOW (DISCHARGE SERVICES)

NOTE :-
1. PRESSURE INDICATOR MOUNTED LOCAL AT SOURCE

A4 - 11

EN-DG-724-145-7002
REV. NO. 00
PAGE :

DRIVE CONTROL PHILOSOPHY

DCS/µP INTERFACE FOR SOLENOID DRIVE
(24V DC / 240V AC UPS)

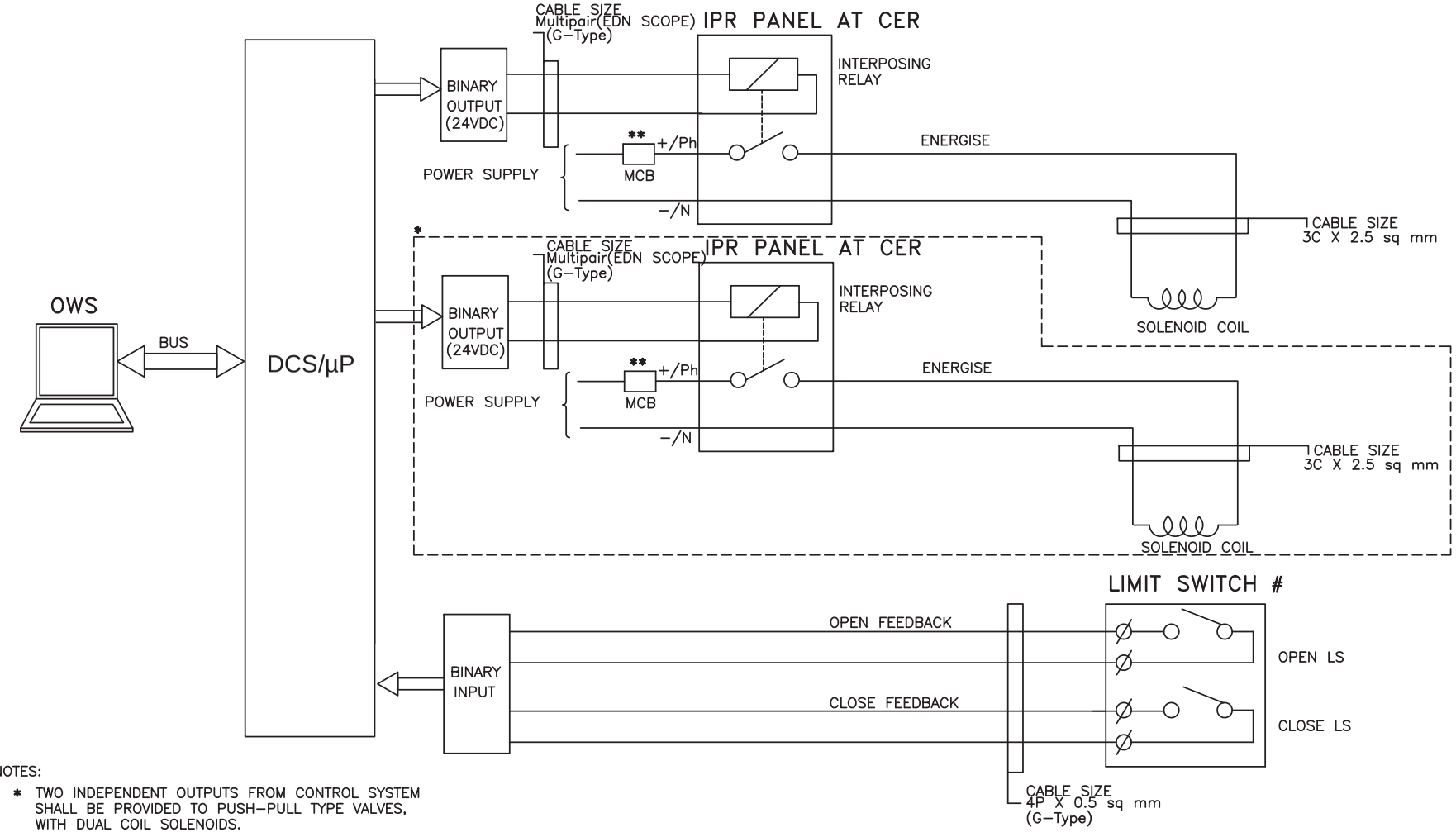

NOTES:

* TWO INDEPENDENT OUTPUTS FROM CONTROL SYSTEM SHALL BE PROVIDED TO PUSH–PULL TYPE VALVES, WITH DUAL COIL SOLENOIDS.

** MCB SHALL BE PROVIDED FOR EACH SOLENOID

\# FOR ON/OFF TYPE, SOLENOID ACTUATED CONTROL VALVE.

BHEL	PROJECT: 2X660MW BIFPCL MAITREE	DRG.NO. Maitree–01–CD–FF–123002–PEM–D
	TITLE DCS/µP INTERFACE FOR SOLENOID DRIVE	DATE 10.08.2017
		SHT 9 OF 11

DCS/µP INTERFACE FOR ANALOG DRIVE

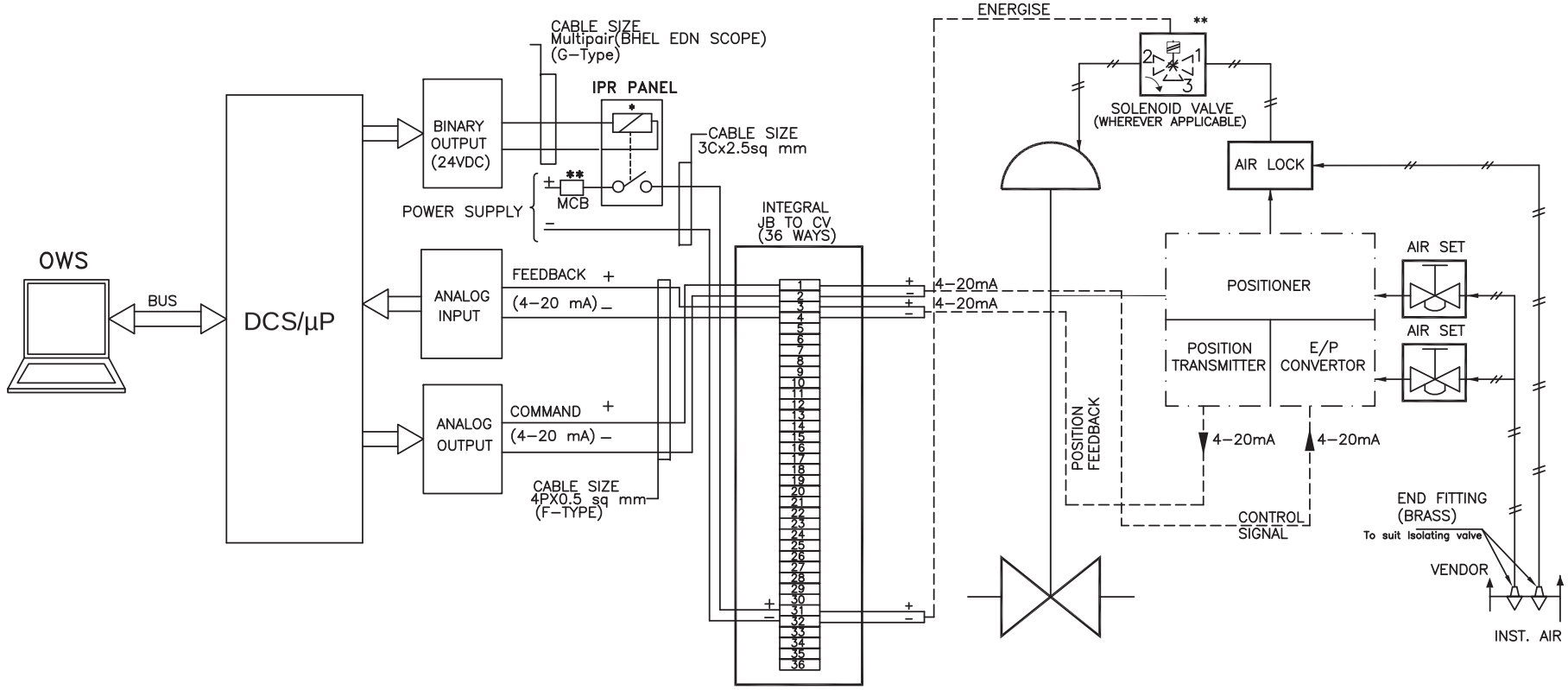

NOTES:

* APPLICABLE TO VALVES WHERE PROTECTION OPEN/CLOSE ACTION FOR CONTROL DEMAND OVERRIDING IS REQUIRED.

** MCB SHALL BE PROVIDED FOR EACH SOLENOID

BHEL	PROJECT: 2X660MW BIFPCL MAITREE	DRG.NO. Maitree–01–CD–FF–123002–PEM–D
	TITLE TYPICAL HOOK–UP DIAGRAM ANALOG DRIVE	DATE 10.08.2017
		SHT 11 OF 11

JB TERMINATION DIAGRAM

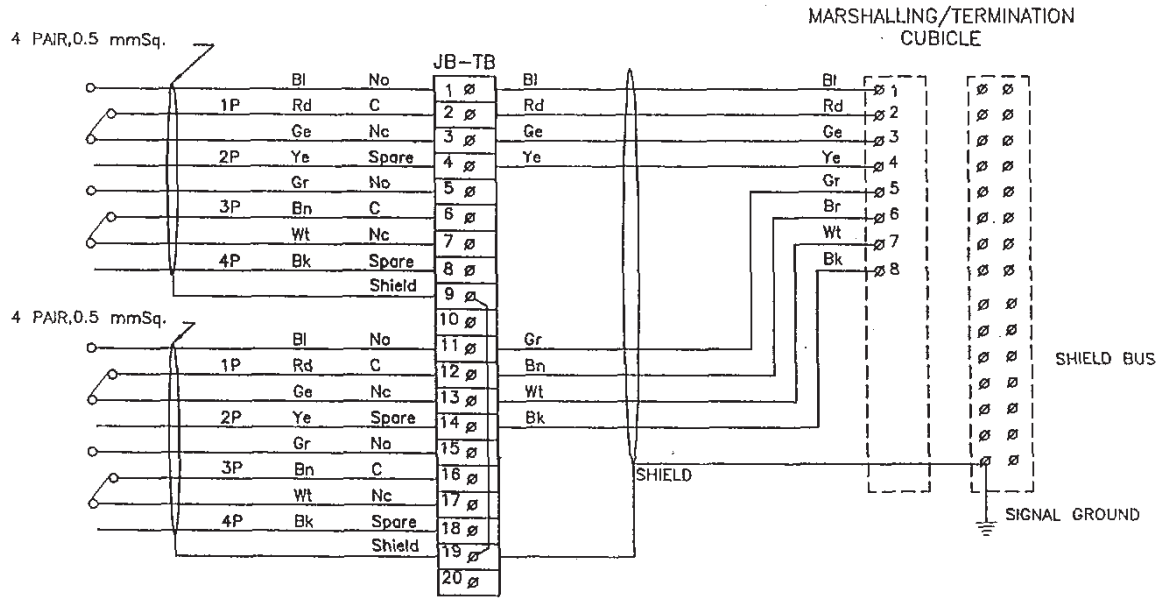

TITLE

INTERFACING OF FIELD INSTRUMENTS/
SWGR SWITCH (COC) TERMINATION DETAILS

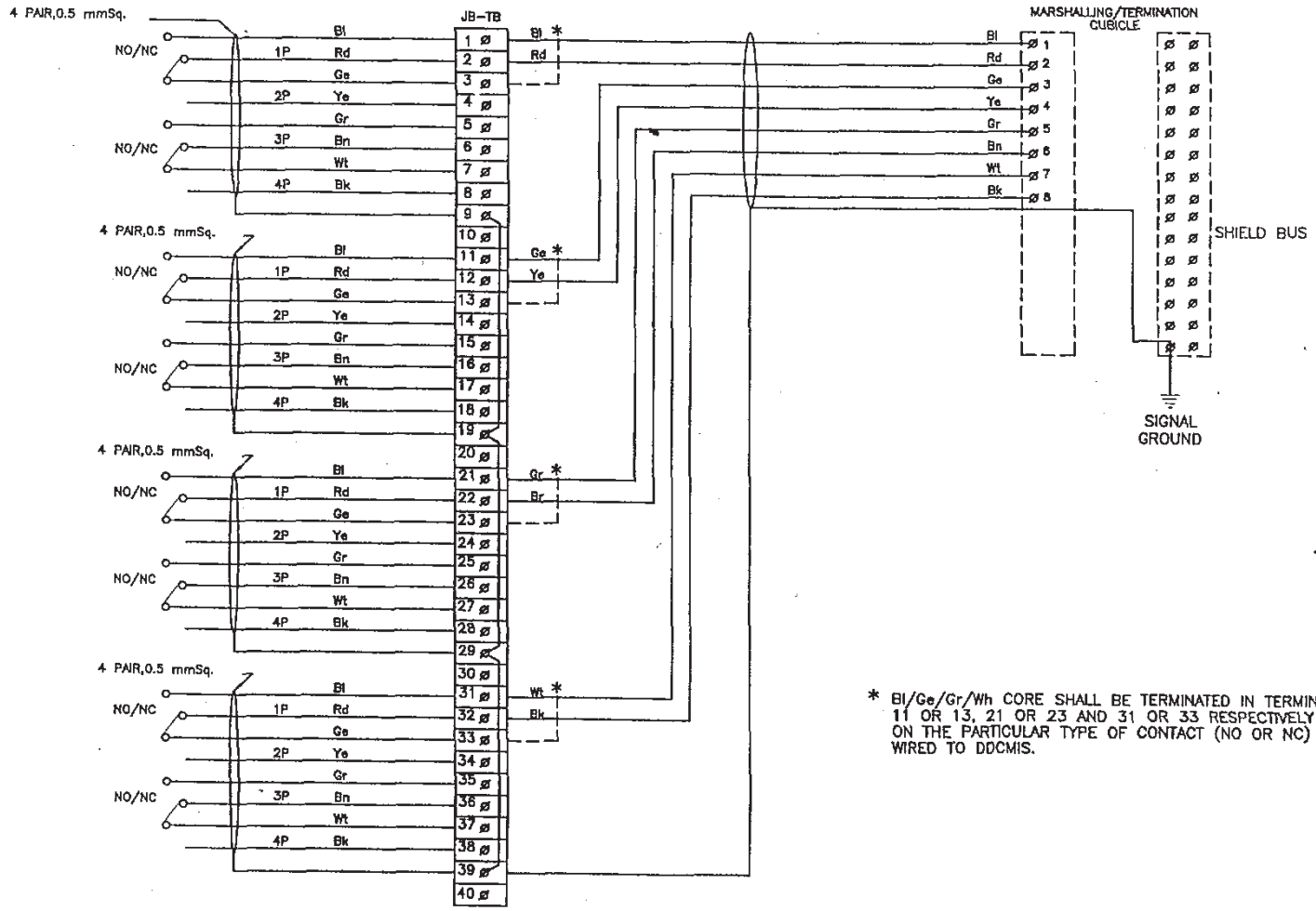

* Bl/Ge/Gr/Wh CORE SHALL BE TERMINATED IN TERMINAL 1 OR 3, 11 OR 13, 21 OR 23 AND 31 OR 33 RESPECTIVELY DEPENDING ON THE PARTICULAR TYPE OF CONTACT (NO OR NC) IS TO BE WIRED TO DDCMIS.

TITLE

INTERFACING OF FIELD INSTRUMENTS
SWITCH TERMINATION DETAILS
NO/NC

0.

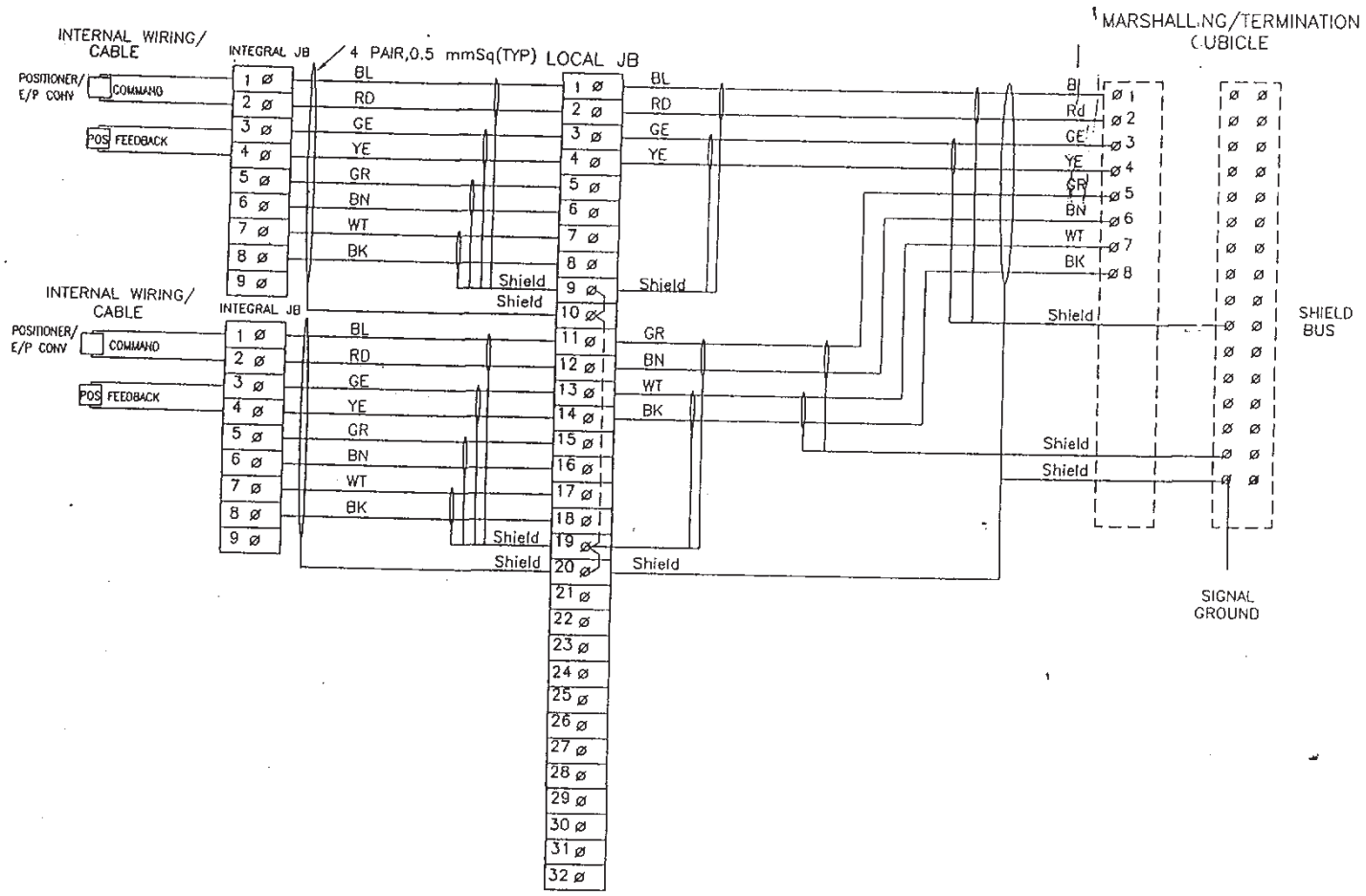

TITLE

INTERFACING OF FIELD INSTRUMENTS
CONTROL VALVE

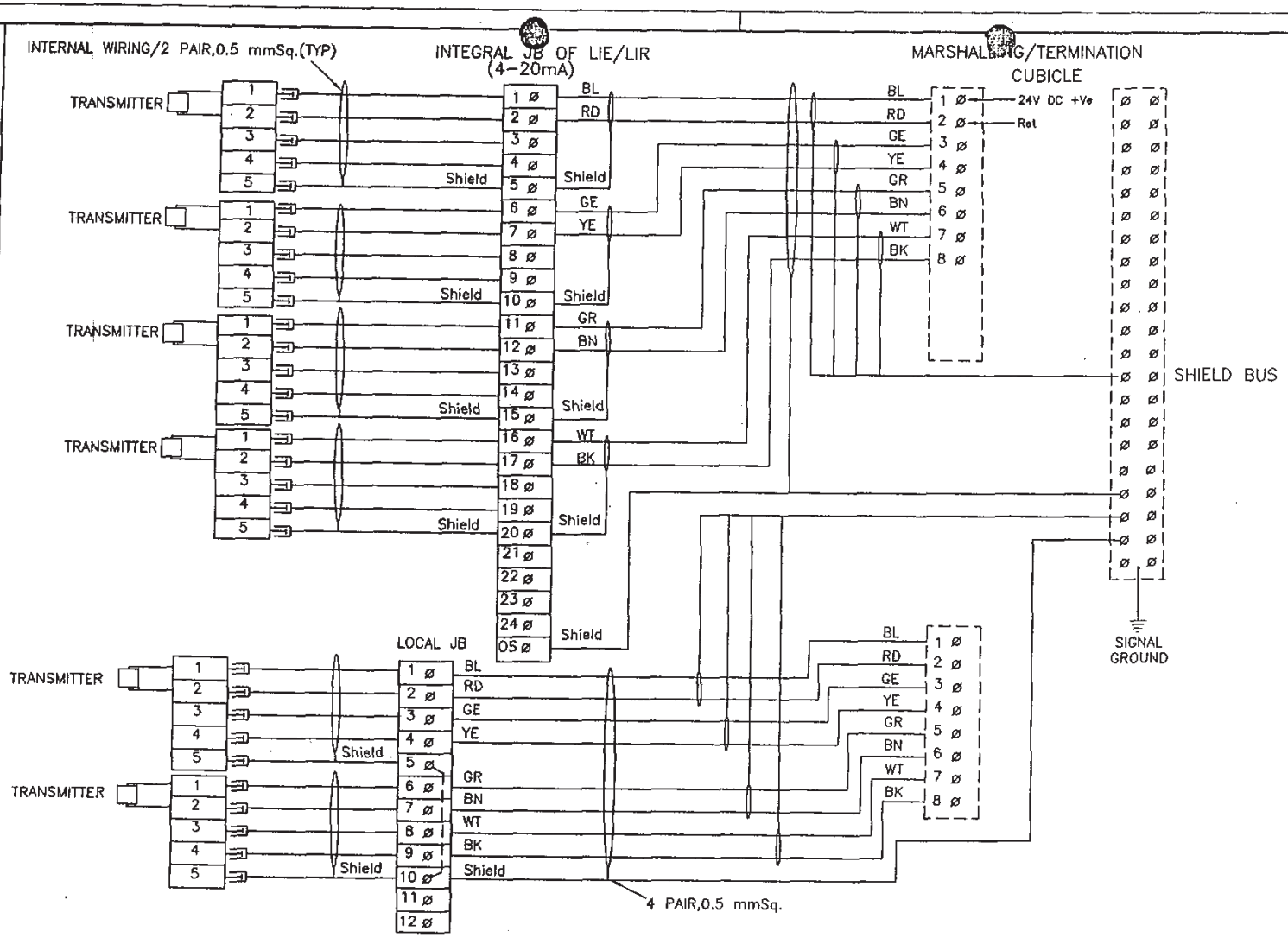

TITLE

INTERFACING OF FIELD INSTRUMENTS
4-20mA

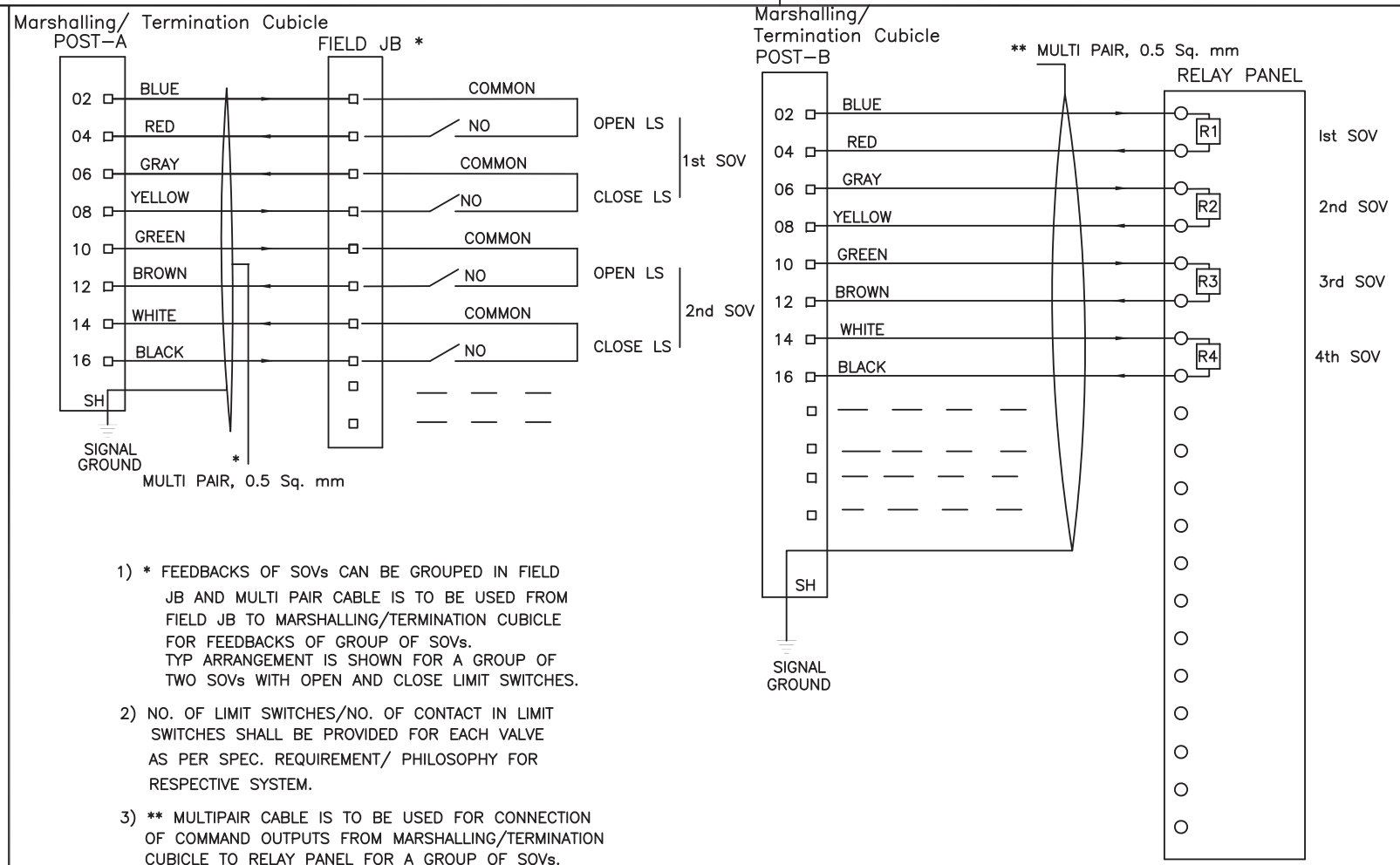

1) * FEEDBACKS OF SOVs CAN BE GROUPED IN FIELD JB AND MULTI PAIR CABLE IS TO BE USED FROM FIELD JB TO MARSHALLING/TERMINATION CUBICLE FOR FEEDBACKS OF GROUP OF SOVs.
TYP ARRANGEMENT IS SHOWN FOR A GROUP OF TWO SOVs WITH OPEN AND CLOSE LIMIT SWITCHES.

2) NO. OF LIMIT SWITCHES/NO. OF CONTACT IN LIMIT SWITCHES SHALL BE PROVIDED FOR EACH VALVE AS PER SPEC. REQUIREMENT/ PHILOSOPHY FOR RESPECTIVE SYSTEM.

3) ** MULTIPAIR CABLE IS TO BE USED FOR CONNECTION OF COMMAND OUTPUTS FROM MARSHALLING/TERMINATION CUBICLE TO RELAY PANEL FOR A GROUP OF SOVs.

TITLE

INTERFACING OF FIELD INSTRUMENTS
INTERFACE OF DDCMIS WITH MCC/SWGR/ACTUATOR
(SINGLE COIL SOLENOID)

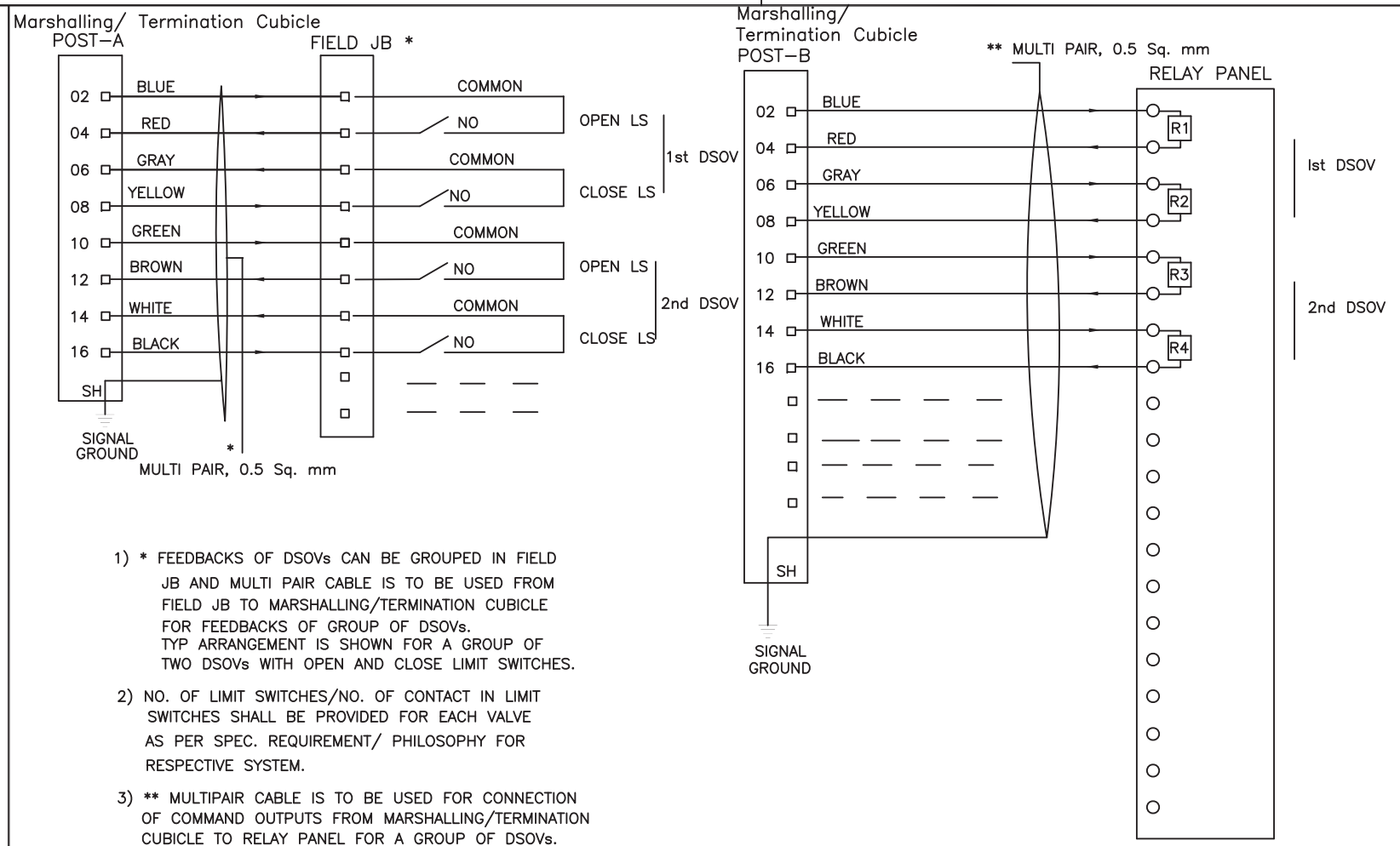

1) * FEEDBACKS OF DSOVs CAN BE GROUPED IN FIELD JB AND MULTI PAIR CABLE IS TO BE USED FROM FIELD JB TO MARSHALLING/TERMINATION CUBICLE FOR FEEDBACKS OF GROUP OF DSOVs.
TYP ARRANGEMENT IS SHOWN FOR A GROUP OF TWO DSOVs WITH OPEN AND CLOSE LIMIT SWITCHES.

2) NO. OF LIMIT SWITCHES/NO. OF CONTACT IN LIMIT SWITCHES SHALL BE PROVIDED FOR EACH VALVE AS PER SPEC. REQUIREMENT/ PHILOSOPHY FOR RESPECTIVE SYSTEM.

3) ** MULTIPAIR CABLE IS TO BE USED FOR CONNECTION OF COMMAND OUTPUTS FROM MARSHALLING/TERMINATION CUBICLE TO RELAY PANEL FOR A GROUP OF DSOVs.

PROJECT	TYPICAL THERMAL POWER PROJECT
TITLE	INTERFACING OF FIELD INSTRUMENTS INTERFACE OF DDCMIS WITH MCC/SWGR/ACTUATOR (DOUBLE COIL SOLENOID)

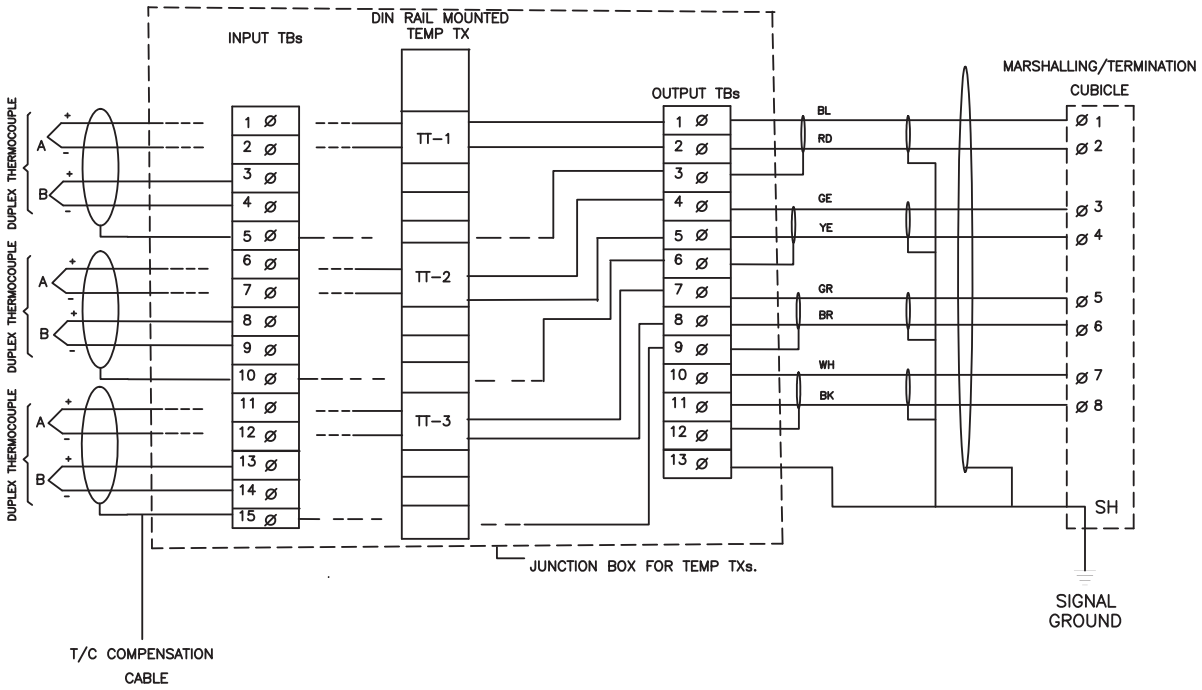

NOTE: 1) ABOVE IS THE TYP DRG. FOR DIN RAIL MOUNTED TEMP TRANSMITTER FOR T/C APPLICATION. EXACT TYPE OF TEMP TRANSMITTERS SHALL BE AS PER PART-A OF SPECIFICATION.

2) THE EXACT GROUPING OF TEMP TXs SHALL BE FINALISED DURING DETAILED ENGG. STAGE.

3) AFTER GLANDING OF T/C CABLES ON JB, THE CABLE PAIR OF FIRST ELEMENT WILL BE DIRECTLY CONNECTED TO TT AND FOR CABLE PAIR OF SECOND ELEMENT LOOP SHALL BE KEPT, BEFORE TERMINATION AT INPUT TBs FOR FUTURE USE.

TITLE

INTERFACING OF FIELD INSTRUMENTS
TYPICAL T/C CONNECTION WITH TEMP TXs IN JBs

SECTION - III

SCHEDULE OF PRE-BID CLARIFICATION

All clarification from the Technical Specification shall be filled in by the BIDDER clause by clause in this format only.

VOLUME	SECTION	CLAUSE NO.	PAGE NO.	SPECIFICATION REQUIREMENT	CLARIFICATION	REASONS FOR CLARIFICATION

COMPLIANCE CUM CONFIRMATION CERTIFICATE

The bidder shall confirm compliance with following by signing/ stamping this compliance certificate and furnishing same with the offer:

1. The scope of supply, technical details, construction features, design parameters etc. shall be as per technical specification & there are no exclusions/ deviations with regard to same.

2. QP/ test procedures shall be submitted in the event of order based on the guidelines given in the specification & QP enclosed therein.

3. QP will be subject to BHEL/Customer approval in the event of order & customer hold points for inspection/ testing shall be marked in the QP at the contract stage. Inspection/ testing shall be witnessed as per same apart from review of various test certificates/ Inspection records etc.
   The charges for 3rd party inspection (Lloyds, TUV or equivalent) for imported components shall be included in the base price of the equipment by the bidder.

4. All drawings/data – sheets etc. to be submitted during contract shall be subject to BHEL/Customer review/ approval. GA drawings, as submitted with offer at tender stage are for reference purpose only and shall be subject to approval during contract stage.

5. There are no other deviations with respect to specification other than those furnished in the 'Schedule of Deviations'.

6. The offered materials shall be either equivalent or superior to those specified. Also for components where material is not specified it shall be suitable for intended duty, materials shall be subject to approval in the event of order.

7. The commissioning spares (if any) are supplied on 'As Required Basis' & prices for same included in the base price (If bidders reply to this is "No commissioning spares are required" and if some spares are actually required during commissioning same shall be supplied by bidder without any cost to BHEL).

8. All sub vendors shall be subject to BHEL/CUSTOMER approval.

9. Any special tools & tackles, if required, shall be in bidder's scope.

10. Performance guarantee test parameters shall stand valid till the satisfactory completion of Performance guarantee test and its acceptance by BHEL/Customer.

11. Prices for recommended spares (if any) for three year operation shall be furnished separately and not to be included in the base price.

DECLARATIONS

I ……..……certify that all the technical data and information pertaining to this specification are correct and are true representation of the equipment/system covered by our format proposal number Dated …….. and there is no deviation to the specification.

I hereby certify that I am duly authorized representative of the Bidder's company whose name appears above my signature.

Bidders Company Name …….

Authorized representative's Signature ……..

Name …….

Bidder's Name

The bidder hereby agrees to fully comply with the requirements and intent of this specification for the price indicated

DEVIATION SHEET (COST OF WITHDRAWL)

2 X 660MW MAITREE SUPER THERMAL POWER PROJECT

TECHNICAL SPECIFICATION FOR OXYGEN DOSING SYSTEM

TECH SPEC NO: PE-TS-421-154-A002

TENDER ENQUIRY REFERENCE:-

NAME OF BIDDER:-

SL NO	VOULME/ SECTION	PAGE NO.	CLAUSE NO.	TECHNICAL SPECIFICATION/ TENDER DOCUMENT	COMPLETE DESCRIPTION OF DEVIATION	COST OF WITHDRAWL OF DEVIATION	REFERENCE OF PRICE SCHEDULE ON WHICH COST OF WITHDRAWL OF DEVIATION IS APPLICABLE	NATURE OF COST OF WITHDRAWL OF DEVIATION (POSITIVE/ NEGATIVE)	REASON FOR QUOTING DEVIATION
TECHNICAL DEVIATIONS									
COMMERCIAL DEVIATIONS									

PARTICULARS OF BIDDERS/ AUTHORISED REPRESENTATIVE

NAME	**DESIGNATIONS**	**SIGN & DATE**	

NOTES:

1. For self manufactured items of bidder, cost of withdrawl of deviation will be applicable on the basic price (i.e. excluding taxes, duties & freight) only.
2. For directly dispatchable items, cost of withdrawl of deviation will be applicable on the basic price including taxes, duties & freight.
3. All the bidders have to list out all their Technical & Commercial Deviations (if any) in detail in the above format.
4. Any deviation not mentioned above and shown separately or found hidden in offer, will not be taken cognizance of.
5. Bidder shall submit duly filled unpriced copy of above format indicating "quoted" in "cost of withdrawl of deviation" column of the schedule above along with their Techno-commercial offer, wherever applicable.
6. Bidder shall furnish price copy of above format along with price bid.
7. The final decision of acceptance/ rejection of the deviations quoted by the bidder shall be at discretion of the Purchaser.
8. Bidders to note that any deviation (technical/commercial) not listed in above and asked after Part-I opening shall not be considered.
9. For deviations w.r.t. Payment terms, Liquidated damages, Firm prices and submission of E1/ E2 forms before claiming 10% payment, if a bidder chooses not to give any cost of withdrawl of deviation loading as per Annexure-VIII of GCC, Rev-06 will apply. For any other deviation mentioned in un-priced copy of this format submitted with Part-I bid but not mentioned in priced copy of this format submitted with Priced bid, the cost of withdrawl of deviation shall be taken as NIL.
10. Any deviation mentioned in priced copy of this format, but not mentioned in the un-priced copy, shall not be accepted.
11. All techno-commercial terms and conditions of NIT shall be deemed to have been accepted by the bidder, other than those listed in unpriced copy of this format.
12. Cost of withdrawl is to be given seperately for each deviation. In no event bidder should club cost of withdrawl of more than one deviation else cost of withdrawl of such deviations which have been clubbed together shall be considered as NIL.
13. In case nature of cost of withdrawl (positive/negative) is not specified it shall be assumed as positive.
14. In case of descrepancy in the nature of impact (positive/ negative), positive will be considered for evaluation and negative for ordering.