BHARAT HEAVY ELECTRICALS LIMITED
HEEP HARIDWAR INDIA-PIN 249403
FAX NO: 0091 1334 226462
PHONE NO: 0091 1334 284658

Enq. No. : T/T206/2018/6874E/1

M/s.....

Sub: BHEL-HEEP/OPEN-TENDER (Turbine Component) / 2019-20

Dear Sir,

The Heavy Electricals Equipment Plant (HEEP) located in Haridwar, India is one of the major manufacturing plants of Bharat Heavy Electricals Ltd. The core business of HEEP includes design and manufacture of large steam and gas turbines, turbo generators and so on.

Sealed tenders with the **Tender No.** and **opening date** clearly super scribed on the cover are invited from the manufacturers (registered as well as unregistered) for the supply of the items **Position Transmitter & Diff. Detector** enclosed.

TENDER NO. : T/T206/2018/6874E/1 **TENDER OPENING DATE: 31/08/2019 (31st Aug 2019)**			
ITEM CODE	**ITEM DESCRIPTION**	**QTY**	**DELIVERY SCHEDULE**
W97313335130	W97313335130 DRG: 3133351000100 rev. 01 Position Transmitter	6 No.	30.09.2019
W97374201028	W97374201028 Diff. Detector A=343 Spec: ST51005 rev. 00 Size: 343	21 No.	30.09.2019

SPECIAL INSTRUCTIONS:

1. Test Certificate/ Certificate of Compliance (COC) and Guarantee Certificate shall be provided.
2. All Party to provide point wise reply along with supporting documents to each and every point of Pre-Qualification Requirement/PQR (Annexure-1). Non-compliance of these may lead to rejection of offer.
3. The quotation shall be valid for minimum period of 120 days effective from the date of tender opening.
4. BHEL Standard LD Clause as per **General Instruction and Standard Terms & Condition (GISTC)** shall be applicable.
5. BEL Standard Payment terms i.e After receipt and acceptance of material at BHEL Haridwar shall be applicable.
6. All vendor to offer their best delivery schedule.`
7. The total Quantity may undergo change at the time of ordering.

The tender documents can be downloaded from our web site **www.bhel.com or www.bhelhwr.co.in.** After downloading the tender documents from web site, while submitting the tender as detailed in "Instruction to Bidders", intending vendors must submit **Tender Fee of Rs. 2,000/- (Rupees two thousand only)** in the form of Pay Order / Demand Draft (drawn in favour of 'BHEL HARIDWAR') only if hard copy of the tender documents are required. It may be noted that if hard copy of any tender document is required, then the same may be collected against copy of Pay Order / Demand Draft of requisite tender fee (while original to be submitted with Part-I). **However, if no hard copy of tender document is required from BHEL, no tender fee is required to be submitted.**

Vendors must also remit the requisite **EMD (Earnest Money Deposit) of Rs. 2, 00,000.00/- (Rupees two lakh only)** in the form of Pay Order / Demand draft (drawn in favor of 'BHEL HARIDWAR'). In case of foreign bidders e-payment may also be accepted as EMD. **If EMD is not submitted along with the offer (Part-I) then the offer shall be out rightly rejected**.

HEEP BHEL Haridwar PMD (Product Material Directory) ST151 approved vendors having vendor code M23004 are exempted for submission of requisite EMD against this tender enquiry.

Please submit separate drafts for EMD and tender fee in an envelope super-scribed with bold letters "EMD & Tender Fee" to be submitted with Part-I.

As per notification reference no. NSIC/HO/GP/15(4)/2013-14 dated 07.07.2013 Micro & Small Enterprises (MSEs) are not required to submit Tender fees. A certificate issued from competent authority shall be submitted in support of Micro & Small Enterprises (MSEs).

BHEL will forfeit the EMD if, the successful bidder / vendor refuses to honor the order after award of the same on him and / or withdraws his bid and / or unilaterally changes the offer and / or any of its terms & conditions within the validity period.

Tenders will be received in Tender Box kept in Tender Room and should be addressed to:

THE HEAD OF MATERIAL MANAGEMENT,
Heavy Electrical Equipment Plant,
Bharat Heavy Electricals Limited,
HARIDWAR-249403 (Uttarakhand), INDIA.

The date for opening of tender shall be 31/08/2019. Tenders will be received up to 1.45 P.M. on **31/08/2019** and opened on the same day at 2.00 P.M. in the Tender Room**. Please note that tender received after due date & time (1.45PM on 31/08/2019) will not be REPEAT** wi**ll not be opened.** BHEL will not be responsible for any type of postal / courier delay.

Bids shall be opened at 2 PM on the due date in the presence of authorized representative of the bidders who may like to be present. The authorized representative should bring authority letter from their parent company (Manufacturer) for the specific tender no. attending the bid opening.

Amendments/Corrigendum, if any, will be hosted only on the websites mentioned above. Other terms and conditions will be as per tender documents.

Foreign and Indigenous bidders against open tender will necessarily have to obtain class – III DSCs. Procedure for application is available on www.bhel.com.

Documents submitted with the offer/bid by the bidder (original supplier) shall be signed and stamped in each page by authorized representative of the bidder. Documents not signed and stamped in each page by the authorized signatory of the bidder, shall neither be accepted nor considered for evaluation of the bid.

Please submit your offer only for the above requirement subject to our **GENERAL INSTRUCTIONS AND STANDARD TERMS & CONDITIONS (GISTC), Version April 2019, Rev: 04**. Please visit our site www.bhelhwr.co.in for **General Instructions and Standard Terms & Conditions (GISTC), Version April 2019, Rev: 04** for Tender Enquiries. All the bidders/vendors must ensure compliance of these GISTC.

Unregistered vendors may please visit our site www.bhel.com for filing up the Supplier Registration Form. Copy of filled Supplier Registration Form (SRF) may be submitted along with the offer. For this procurement, **Public Procurement (Preference to Make in India), Order 2017 dated 15.06.2017 & 28.05.2018 and subsequent Orders issued by the respective Nodal Ministry shall be applicable even if issued after issue of this NIT but before finalization of contract / PO / WP against this NIT.**

In the event of any Nodal Ministry prescribing higher or lower percentage of purchase preference and/ or local content in respect of this procurement, same shall be applicable. Default purchase preference under Make in India order shall be 20% to suppliers with default minimum local content of 50% for all items / works / services. **All party to provide the Self certificate for local content supplier as per annexure-4 for benefits under Public Procurement (Preference to Make in India).**

For further details, please refer latest version of GISTC.

Procurements where the Estimated value to be procured is less than Rs. 5 lakhs shall be exempted from Public Procurement. (Preference to Make in India), Order 2017 dated 15.06.2017 & 28.05.2018

KINDLY READ "INSTRUCTIONS TO BIDDERS." QUOTATION NOT IN ACCORDANCE WITH THE INSTRUCTIONS ARE LIABLE TO BE DISQUALIFIED AND IGNORED.

INSTRUCTIONS TO BIDDERS FOR OPEN TENDER

1.0 DEFINITION

Registered Vendors - Are those who are registered with BHEL, Haridwar for Megawatt rating/ Size/ Weight of tendered components in respective steel grade or machining of such components.

Un-registered Vendors - Are those who are not registered with BHEL, Haridwar for Megawatt rating/ Size/ Weight of tendered components in respective steel grade or machining of such components.

2.0 TECHNICAL QUALIFICATION

Enclosed format – **Annexure-1 (Pre-Qualifying Conditions)** to be submitted. **It is the mandatory requirement. Offer of Vendors not meeting these requirements may not be considered.**

3.0 ESSENTIAL INSTRUCTIONS

1. Un-registered vendors may be approved by BHEL, if found suitable, on the basis of data furnished by them in Supplier Registration Form (SRF) for Foreign Vendors or Indigenous Vendors (as applicable).
2. BHEL team may visit the vendor(s) works for verification of capability and capacity claimed in tender documents/offer(s).
3. The **tenders shall be submitted in two parts** in separate envelopes as described below on or before the due date. Supplier Registration Form shall be submitted by unregistered vendors only.

   i. **Part I - Envelope I**

   A. Tender Fee (if applicable) & EMD enclosed in sub-envelope (a)
   Or
   Valid certificate/Document towards exemption of Tender fee & EMD (applicable for Micro and small Enterprises)

   B. Pre-Qualifying Conditions (PQRs) – Annexure-1 enclosed in sub-envelope (b)

   C. NDA (Non-Disclosure and Proprietary Information Agreement) – Annex. 3 enclosed in sub-envelope (c)

   D. Techno -Commercial Bid (Technical + commercial details) – It should be the copy of Price Bid without the price part- **enclosed in sub-envelope (d)**

   ii. **Part II - Envelop II - Price Bid**

Note: All the individual envelopes should indicate Tender no. and date of opening of Part-I. All two envelopes [Envelope I (containing sub-envelopes a, b, c & d) & Envelope II to be put in a single covering envelope indicating tender no., due date and the name of vendor (with address, e-mail id & contact details). Offer should be complete in all respect (i.e. Part-I & Part- II).

4. Part-I will be opened on the date and time specified in the tender notice in the presence of those venders who wish to attend.
5. Part – II (Price Bids) along with supplementary price bids, if necessary, will be opened at a later date of only those bidders whose techno-commercial bid will be found acceptable & PQR qualified.
6. Currency exchange rate will be applicable on the date of opening of Part-I for evaluation purpose.
7. Depending upon the delivery suitability, BHEL reserves the right to split order on more than one vendor.
8. Foreign and Indigenous bidders against open tender will necessarily have to obtain class – III DSCs. Procedure for application available on www.bhel.com.
9. **Please submit your offer only for the above requirement subject to our GENERAL INSTRUCTIONS AND STANDARD TERMS & CONDITIONS (GISTC). Please visit our site www.bhelhwr.co.in for General Instructions and Standard Terms & Conditions (GISTC) for Tender Enquiries. All the bidders/vendors must ensure compliance of these GISTC. GISTC can also be referred by login to B2B Portal for Registered Vendors.**

REFERENCES:

Annexure-1: Pre-Qualifying Conditions (1 Page)

Annexure-2: Drawing & Specification (21 Page)

Annexure-3: NDA (10 Pages)

Annexure-4: Certificate for local content supplier as per make in India

Annexure-1

There is a requirement of **"Linear Position Transmitter"** for Steam Turbine applications:

Pre-Qualification Criteria

1. The requirement of adjustable linear measuring range is 0-100 mm for which corresponding Transmitter output shall be 4-20mA.
2. The operating ambient temperature is 120°C (maximum).
3. There is a requirement of electrical connection with Harting Plug connectors of 4 pins
4. Local mechanical indicator shall be provided.
5. Other dimensional details shall be as per attached spec No. ST-51005, page 17, figure-4 with A=343mm.
6. Supplier should have successful operational experience of "Linear Position Transmitter" in any power plant.

सुप्रीत
03/06/19
सुप्रीत कौर
व: अभियंता /सी आई ई

विनोद कुमार
03/6/2019
अपर महाप्रबंधक /सी आई ई

FIRST ANGLE PROJECTION

(ALL DIMENSIONS ARE IN mm)

FORM DG 38(B)

DRAWING No. 3-13335-10001

Annexure-2

COPYRIGHT AND CONFIDENTIAL
THE INFORMATION ON THIS DOCUMENT IS THE PROPERTY OF BHARAT HEAVY ELECTRICALS LIMITED. IT MUST NOT BE USED DIRECTLY OR INDIRECTLY IN ANY WAY DETERIMENTAL TO THE INTEREST OF THE COMPANY.

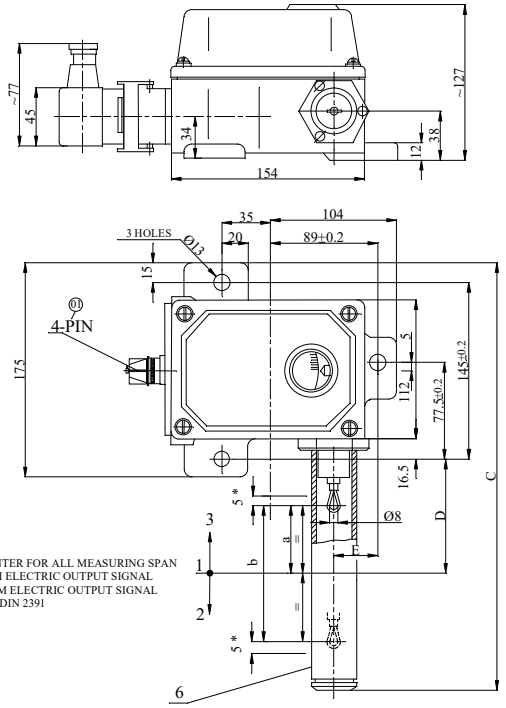

* - GUARANTEED OVERSHOOT

NOTES:-

1. MEASURING RANGE CENTER FOR ALL MEASURING SPAN
2. DIRECTION OF MINIMUM ELECTRIC OUTPUT SIGNAL
3. DIRECTION OF MAXIMUM ELECTRIC OUTPUT SIGNAL
6. PROTECTIVE TUBE 35X4 DIN 2391

TECHNICAL DETAIL FOR POSITION TRANSMITTER C/4431-A1390-A...

1. SUPPLIER : M/S SIEMENS, GERMANY OR EQUIVALENT
2. MEASURING SPAN : REFER VARIANT TABLE
3. MEASURING CONNECTIONS : ROPE LOOP WITH 8 MM ID
4. SPRING FORCE ON THE ROPE AT MAXIMUM RANGE:
   ROPE PULLED OUT : 65 TO 70 N
   ROPE PULLED IN : 15 TO 20 N
5. ERROR LIMIT OF ENTIRE MEASURING CHANNEL : 2% OF FULL-SCALE VALUE (WITHOUT OUTPUT DEVICES)
6. MEASURING RANGE APPLICABLE FOR 0 TO 20 mA:
   - FOR TYPE A102 - 0...20 mm TO 0...50 mm
   - FOR TYPE A103 - 0...40 mm TO 0...100 mm
   - FOR TYPE A104 - 0...80 mm TO 0...200 mm
   - FOR TYPE A105 - 0...96 mm TO 0...240 mm
7. MAX. OPERATING TEMPERATURE : 120 DEGREE CELCIUS
8. ALL OVER SURFACE SHOULD BE COPPER & NICKLE PLATED
9. NAME PLATE SHOULD BE DESIGNATED IN ENGLISH
10. IDENTIFICATION AS PER HW0400397 BY ATTACHING A TAG
11. TECH. DELIVERY CONDITION OTHER THAN AS SPECIFIED SHALL BE AS PER ST51005 (01)
12. VENDER TO SUBMIT CERTIFICATE OF COMPLIANCE ALONGWITH SUPPLY.

VARIANT TABLE:

VAR. NO.	TYPE	MAX. SPAN (mm)	DIMENSIONS (mm) 'C'	'D'	'E'	MAT.CODE
00	-A102	50	293	67.5	64.6	
01	-A103	100	343	92.5	64.6	
02	-A104	200	443	142.5	41.2	
03	-A105	240	483	162.5	41.2	W97313335121

GRADE OF UNTOL.DIM
M/CG.–C/M/F AA0230208
WELDING–A/B/C/D AA0621104
GAS CUTTING–'T3'AA0621101

~~GMS No./GR. SP. NO.~~ CBOM01333510000

AGREED DEPT	NAME	SIGN	DATE

STATUS OF DRG U

TYPE OF PRODUCT OR NAME OF CUSTOMER/PROJECT: STEAM TURBINE

BHAREL BHEL — BHARAT HEAVY ELECTRICALS LTD. RANIPUR, HARDWAR

	NAME	SIGN	DATE
DRN	SCG	-SD-	25.01.02
CHD	SKS	-SD-	25.01.02
APPD	BSG	-SD-	20.5.02

NO. OF VAR 004 (73 74)

REV	DATE	ALTERED / CHECKED	REV	DATE	ALTERED / CHECKED	REV	DATE	ALTERED / CHECKED
						01	4.7.03	S.C.G. -SD- / S.K.S. -SD-

CHANGED AS PER C/A NO. STE-03-F1098.

DEPT STE
CODE 4011

SCALE NTS

WEIGHT (KG) 5.8

REF. TO ASSY. DRG. 0-13335-10000

ITEM No. 005

NO. OF ITEMS 001 (75 77)

TITLE : POSITION TRANSMITTER

CARD CODE

DRAWING NO. 3-13335-10001 - (7 22 23 24)

SHEET No. 01 | No. OF SHEETS 01

SIZE A3

Ref.Drawing No. | Sign & Date | Inventory No.

Annexure-2

बी एच ई एल

PRODUCT STANDARD

STEAM TURBINE ENGINEERING

ST 51005

PAGE 1 OF 20

BHEL EXPERIENCE

SIGN & DATE

SUPERSEDES INVENTORY No.

COPYRIGHT AND CONFIDENTIAL
The information on this document is the property of BHARAT HEAVY ELECTRICALS LIMITED.
It must not be used directly or indirectly in any way detrimental to the insterest of the company.

TURBINE SUPERVISORY INSTRUMENTATION SYSTEM (EXPANSION, POSITION AND VIBRATION) FOR STEAM TURBINES

1.0 The system shall be used for continuous monitoring of ~~overall~~ thermal expansions of turbine, relative expansion of turbine rotors and casings, valve positions, axial position of turbine rotor, absolute bearing vibrations and shaft vibrations under all condition of turbine operation.

2.0 Scope of supply.

2.1 The system shall consist of various sensors/transducers with suitable leads of heat resistant teflon insulated or higher temperature with-standing cable covered with flexible metalic conduit upto turbine junction boxes, ~~pre-amplifiers~~, complete measuring circuits/ signal conditioners, power supplies/oscillators, limit value monitors etc. housed in a suitable standard 19" rack panel/cabinet as stated in " Instrument Cabinet/Panel" document No. ST 51003

2.1.1 The details of various parameters to be covered in the system shall be as per the schematic diagrams at page No. 5 to 9

2.1.2 The range of measurements and adjustable set points for limit value monitors of various services shall be as stated under " Specification " at page No. 3 & 4

2.1.3 The purpose, scope of supply, accuracies and principle of monitoring for each service shall be as per " additional description" at page No. 10 to 13

2.2 Sensors and mounting brackets.

2.2.1 All the sensors alongwith their respective mounting brackets shall be included in the offer. The sensors/mounting brackets shall be so designed to suit the existing mounting spaces and dimensions for each service(as shown in fig. 1 to 7)in the steam turbines.

2.2.2 All the sensors shall be capable of continuous operation at 180°C invironmental temperature of steam and turbine-oil mist.

AGREED					NAME	SIGN	DATE
DEPT.	NAME	SIGN	DATE	DRAWN	VERMA		31.10.80
TSX	S. KUMAR.	Sudhir	31/10/80	WORKED	GHOSH		"
				CHECKED	Dr. A.K.B.		"
				SUPERVISED	K.P.M.		"

Approved : ENGG. DEV. MANAGER

ST 8.20

Prepared	Issued	Date
19-6-80	STE (TA) HW	31.10.80

SIGN & DATE

INVENTORY No.

SIGN & DATE

SUPERSEDES INVENTORY No.

COPYRIGHT AND CONFIDENTIAL

The information on this document is the property of BHARAT HEAVY ELECTRICALS LIMITED. It must not be used directly or indirectly in any way detrimental to the interest of the company.

SIGN & DATE

INVENTORY No. P-52/5

2.2.3 Each sensor shall be of proven design so that the performance of randomly chosen sensors of same specification shall be identical, i.e. sensors of each type shall be interchangeable.

2.2.4 All sensors shall meet the requirements of relevant performance and environmental tests as per IS: 589, IS: 2106 or IEC-68 or equivalent international standards.

2.3 Measuring circuits and limit value monitors.

2.3.1 All the measuring /processing circuitries shall be compatible to the corresponding sensor alongwith the necessary provisions for built in continuous supervision and annunciations facilities (in terms of flickering lamps to facilitate easy fault finding) in case of internal fault in the circuits or in the power supply or in the sensor.

2.3.2 All the measurement services shall have built in self check and complete field calibration facility without disturbing the normal operation of the set.

2.3.3 All the measuring units shall be assembled in suitable PCB and housed in standard plug-in type of moudles for mounting on standard 19" rack type of panel/cabinet. Incorrect insertion of PCB/module shall be annunciated on the front panel.

2.3.4 All the electronic modules/measuring units shall be capable of continuous operation at 0-55°C and relative humidity of 0-95 %.

2.3.5 Three independent 4-20 mA d.c. linear analog outputs for each service shall be provided and wired upto the panel's/cabinets terminal stations. Each 4-20 mA d.c. output should be capable of feeding a load resistance of 600 Ohms.

2.3.6 Linearity of each output signal of all the measuring units shall be better than ± 0.5% and the circuitries shall meet the requirements of performance and environmental tests as per IS:589, IS: 2106 or IEC:68 or equivalent international standards.

2.3.7 For each setting of alarms and annunciations, wherever required ~~(as stated in annexure VI & VII)~~, atleast two N.O. and two N.C. contacts, all potential free, suitable for 220V, 0.5 amps d.c. shall be provided on each measuring unit/limit valve monitor.

3.0 Power supply arrangement shall be as stated under " Power supply" document No. ST 51002.

4.0 Other general requirements, documentation, storage quality etc. shall be as stated under " General Requirement" document No. ST 51004.

Annexure-2

INVENTORY No.	SIGN & DATE		COPYRIGHT AND CONFIDENTIAL	SUPERSEDES INVENTORY No.	SIGN & DATE
P-5215			The information on this document is the property of BHARAT HEAVY ELECTRICALS LIMITED, It must not be used directly or indirectly in any way detrimental to the insterest of the company.		

PRODUCT STANDARD

STEAM TURBINE ENGINEERING

ST 51005

PAGE 3 OF 20

FORM

SPECIFICATION.

Sl. No.	Service	Qty.	Range of measurement	Overall Accuracy: Under normal condition	Overall Accuracy: Under extreme environmental condition	Analog output requirement	Alarm contact requirement (excluding the fault contacts)	Remarks
1	2		3	4	5	6	7	8
1	Axial shift	1	-0.5 mm to +0.5 mm	± 2 %	± 5 %	Three independent 4-20mA d.c	Two sets of adjustable contacts over 0-100% range (To be adjusted independently)	
2	Differential expansion of HPT.	1	-5 mm to +16mm	± 2 %	± 5 %	-do-	-do-	
3	Differential expansion of IPT	1	-5 mm to +16 mm	± 2 %	± 5 %	-do-	-do-	
4	Differential expansion of LPT	1	-10 mm to + 32mm	± 2 %	± 5 %	-do-	-do-	
5	Overall thermal expansion of HPT	1	0-40mm(0-100%)	± 2 %	± 3 %	-do-	Nil	
6	Overall thermal expansion of IPT.	1	0-40mm(0-100%)	± 2 %	± 3 %	-do-	Nil	
~~7~~	~~Bearing shell vibration for HP front, HP rear IP rear & LP rear~~	~~4~~	~~0-160 μ~~	~~± 5 %~~	~~± 10%~~	~~-do-~~	~~One set of adjustable contacts over 0-100% range.~~	~~Monitoring of shell OR pedestal vibration shall~~

Annexure-2

INVENTORY No.	SIGN & DATE		COPYRIGHT AND CONFIDENTIAL The information on this document is the property of BHARAT HEAVY ELECTRICALS LIMITED, It must not be used directly or indirectly in any way detrimental to the interest of the company.	SUPERSEDES INVENTORY No.	SIGN & DATE

Sl. No.	Service	Qty.	Range of measurement	Overall Accuracy: Under normal condition	Overall Accuracy: Under extreme environmental condition	Analog output requirement	Alarm contact requirement (excluding the fault contacts)	Remarks
7.	Bearing pedestal vibration for HP front, HP rear, IP rear & LP rear.	4	0-160 μ	± 5 %	± 10 %	Three independent 4-20mA d.c	One set of adjustable contacts over 0-100% range	
8	Absolute Shaft vibration for HP front, HP rear, IP Rear and LP rear.	4	0-400 μ	± 5 %	± 10%	Three independent 4-20mA d.c	-do-	
9	Absolute Bearing pedestal vibration for Gen. front vertical & horizontal, Gen. rear vertical & horizontal.	4	0-160 μ	± 5 %	± 10 %	-do-	-do-	
10	IP control valve position for CV-1 & CV-2 and for LP By-pass Control Valve position.	4	0-50 mm(0-100%)	± 2 %	± 3 %	-do-	Three adjustable contacts over(0-50%), (20-70%) and (50-100%) range.	
11	HP control valve position for CV1 & CV-2.	2	-do-	± 2 %	± 3 %	-do-	-do-	

INVENTORY No.	SIGN & DATE		COPYRIGHT AND CONFIDENTIAL The information on this document is the property of BHARAT HEAVY ELECTRICALS LIMITED. It must not be used directly or indirectly in any way detrimental to the interest of the company.	SUPERSEDES INVENTORY No.	SIGN & DATE

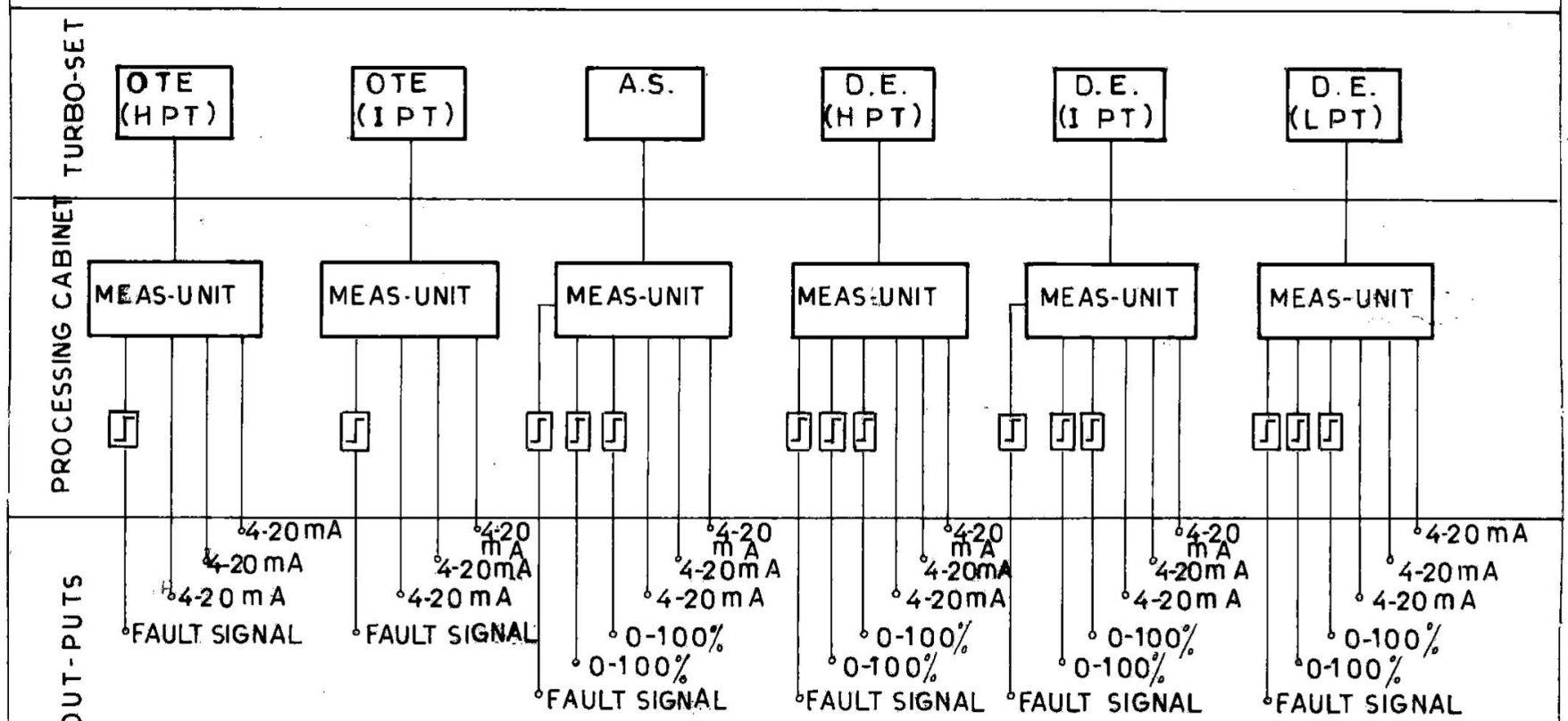

OTE : OVERALL THERMAL EXPNSION
AS : AXIAL SHIFT
DE : DIFFERENTIAL EXPANSION
CONTACTS FOR LIMIT VALUE MONITOR (TWO PAIRS AS IN Cl.2.3.7)

CONT.

PRODUCT STANDARD
STEAM TURBINE ENGINEERING

ST 51 005
PAGE 5 OF 20

FORM

DOC REV NO.: 0

Annexure-2

Annexure-2

FORM

बीएचईएल

PRODUCT STANDARD

STEAM TURBINE ENGINEERING

ST 51005

PAGE 6 OF 20

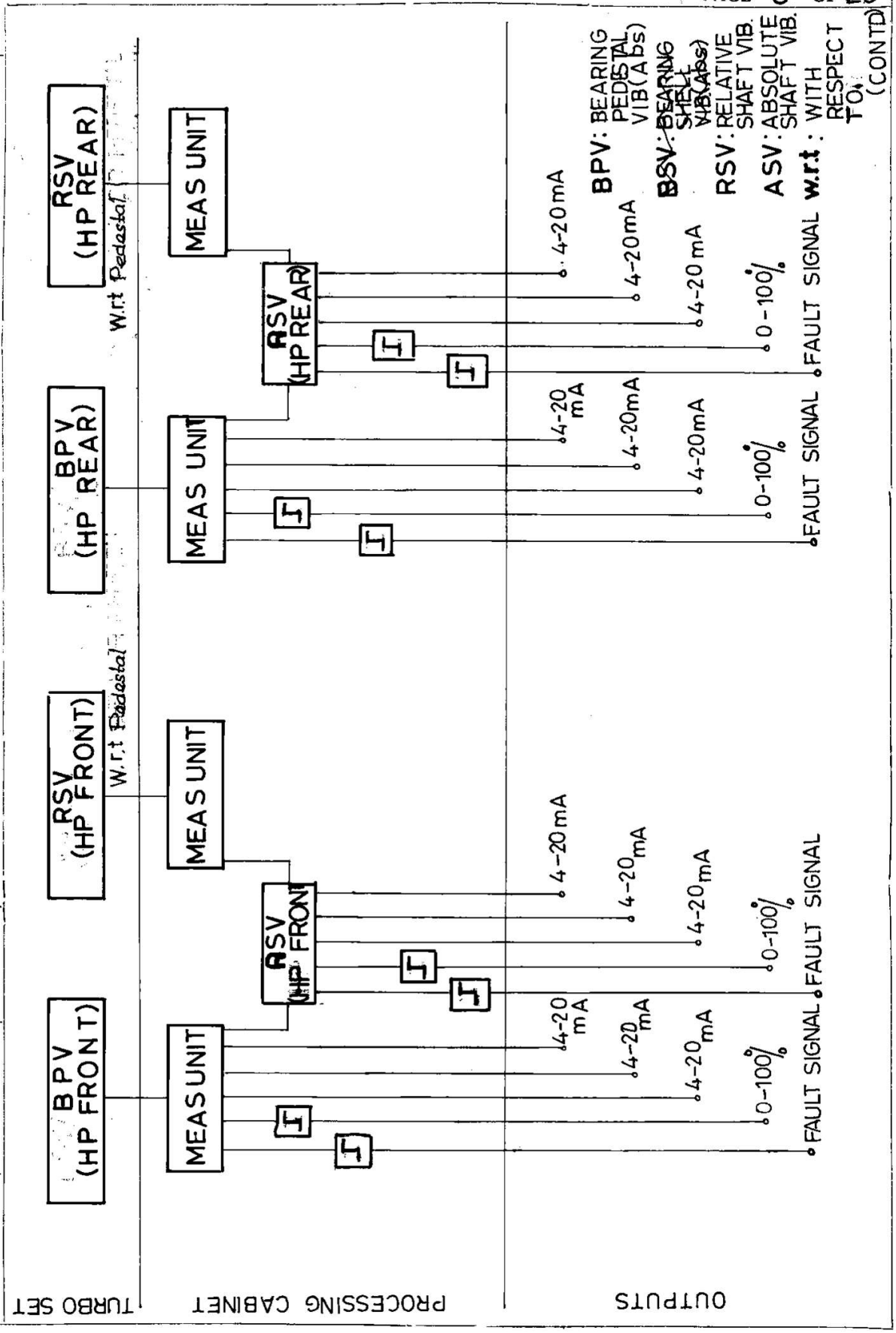

COPYRIGHT AND CONFIDENTIAL

The information on this document is the property of BHARAT HEAVY ELECTRICALS LIMITED, It must not be used directly or indirectly in any way detrimental to the instrest of the company.

INVENTORY No. | SIGN & DATE | SUPERSEDES INVENTORY No. | SIGN & DATE

INVENTORY No.	SIGN & DATE		COPYRIGHT AND CONFIDENTIAL	SUPERSEDES INVENTORY No.	SIGN & DATE
P-5215			The information on this document is the property of BHARAT HEAVY ELECTRICALS LIMITED. It must not be used directly or indirectly in any way detrimental to the interest of the company.		

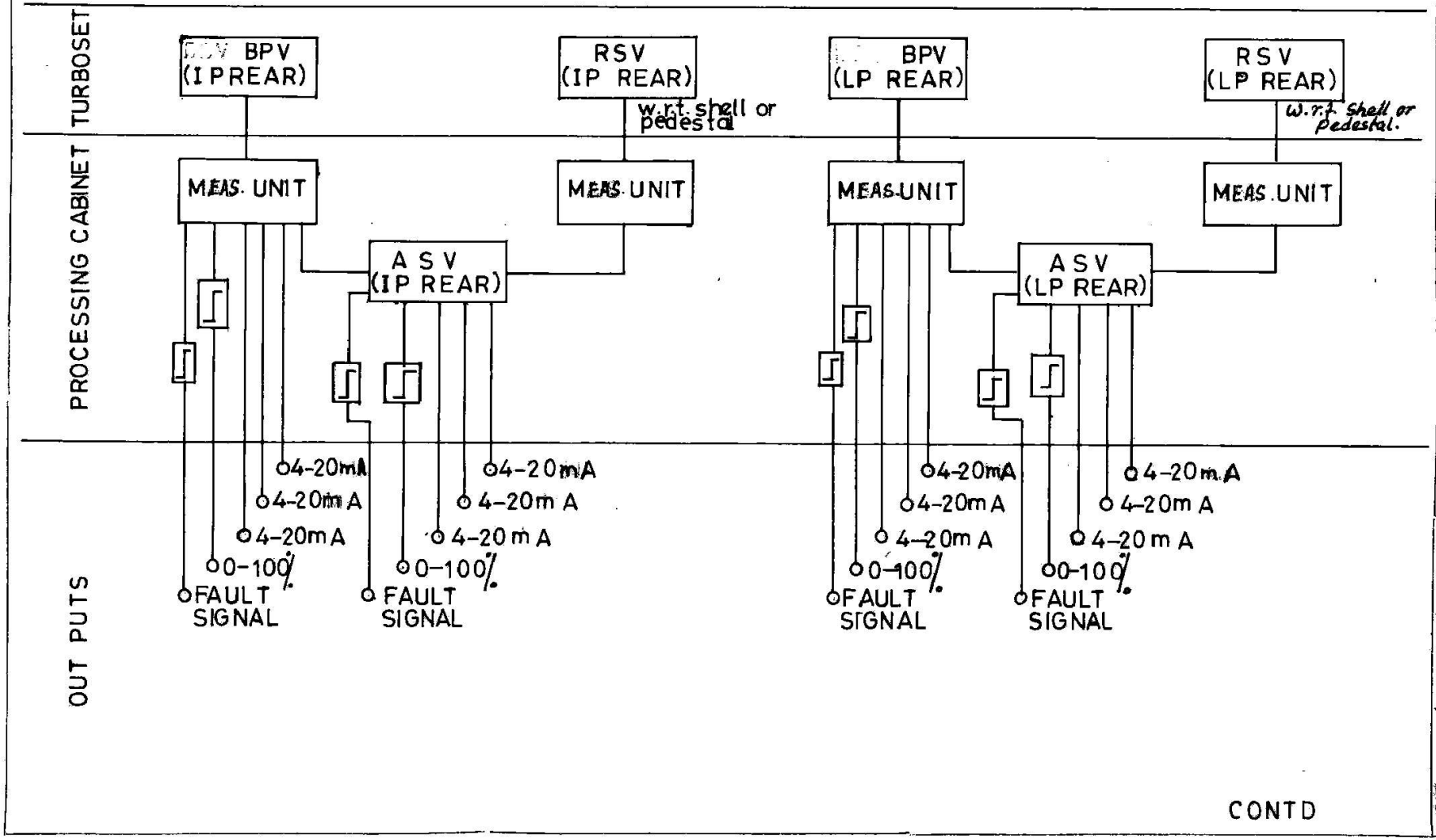

CONTD

PRODUCT STANDARD

STEAM TURBINE ENGINEERING

ST 51005

PAGE 7 OF 10

FORM

DOC REV NO.: 0

Annexure-2

INVENTORY No.	SIGN & DATE		COPYRIGHT AND CONFIDENTIAL	SUPERSEDES INVENTORY No.	SIGN & DATE
P-5215			The information on this document is the property of BHARAT HEAVY ELECTRICALS LIMITED, It must not be used directly or indirectly in any way detrimental to the interest of the company.		

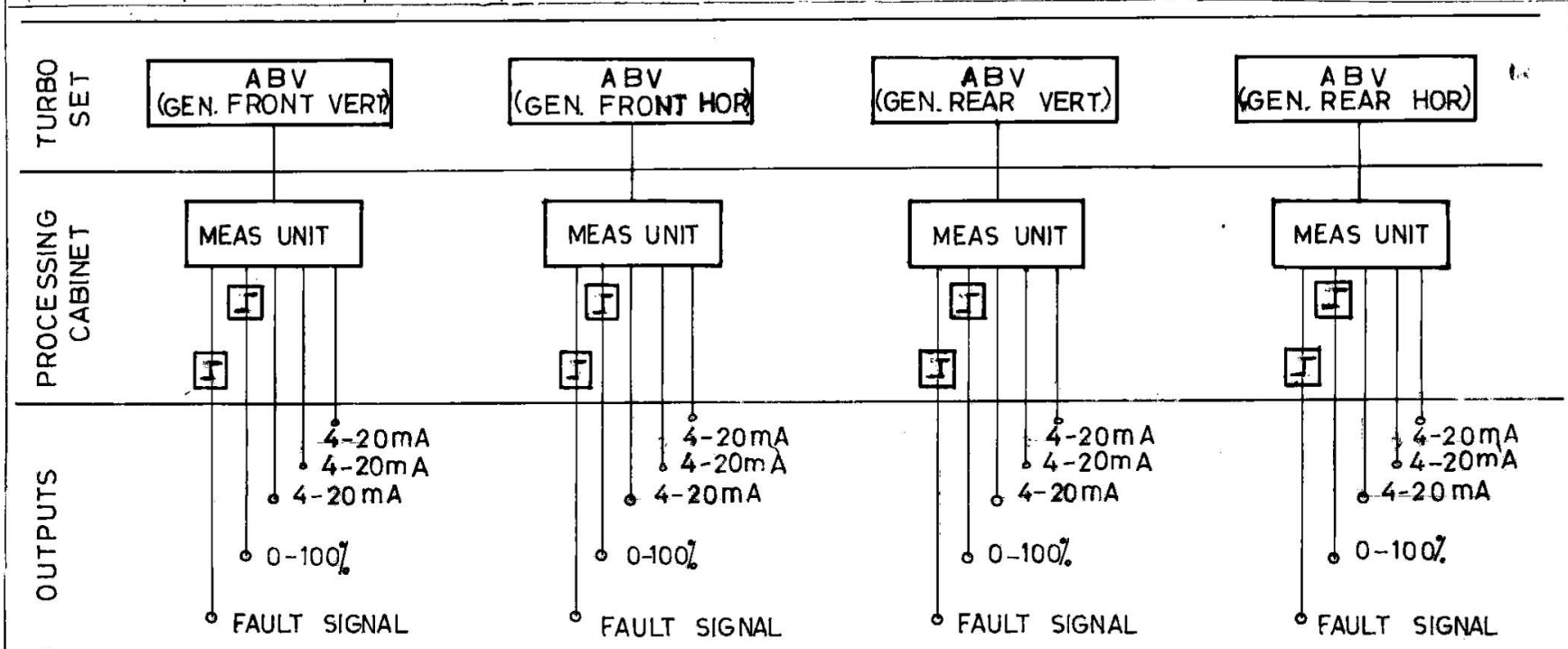

ABV = ABS. BEARING VIB
VERT = VERTICAL
HOR = HORIZONTAL

CONTD.

PRODUCT STANDARD
STEAM TURBINE ENGINEERING

ST 54 005
PAGE 8 OF 20

FORM

DOC REV NO.: 0

Annexure-2

INVENTORY No.	SIGN & DATE		COPYRIGHT AND CONFIDENTIAL The information on this document is the property of BHARAT HEAVY ELECTRICALS LIMITED, It must not be used directly or indirectly in any way detrimental to the interest of the company.	SUPERSEDES INVENTORY No.	SIGN & DATE
P-5215					

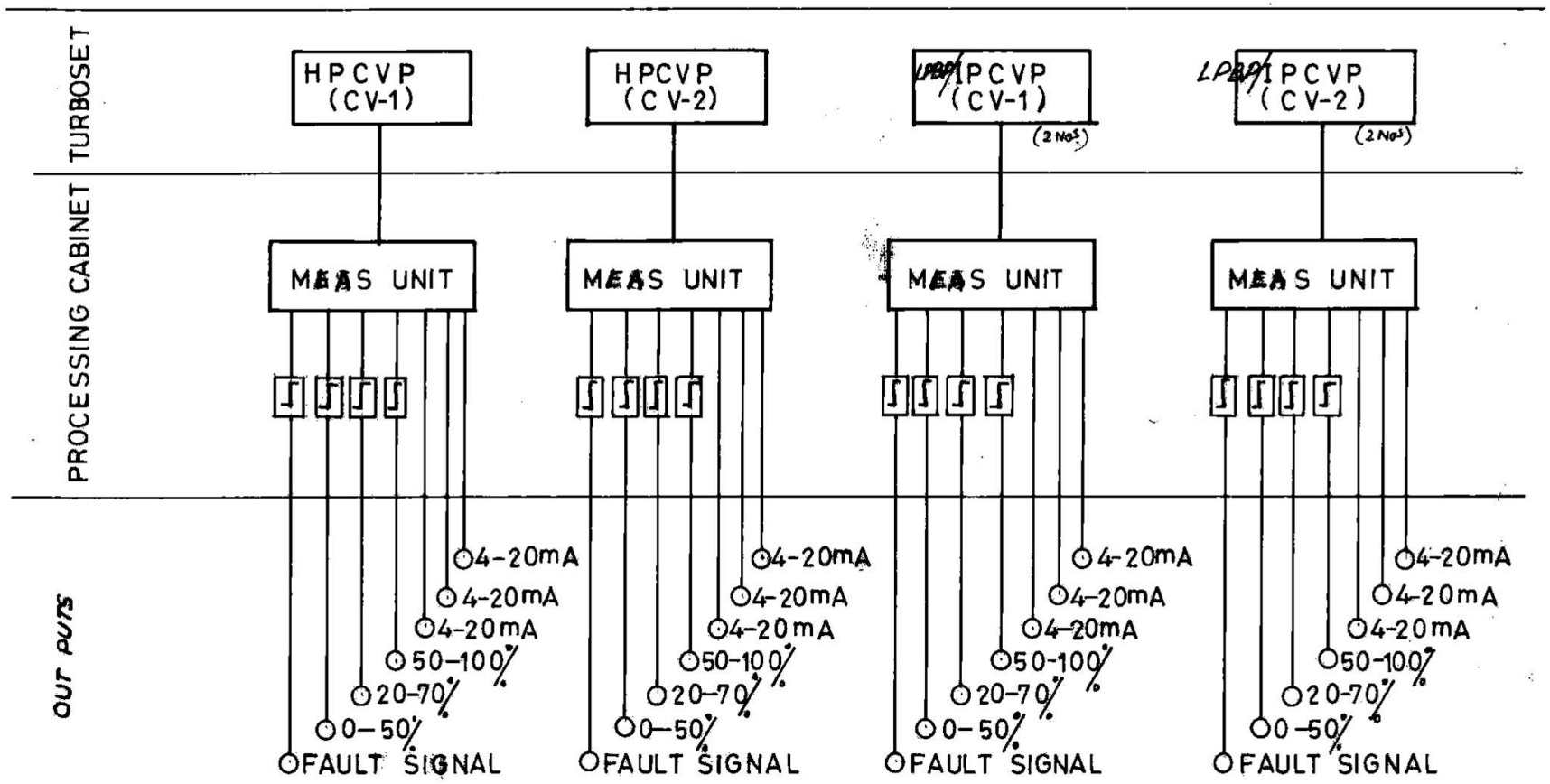

HPCVP : HP CONTROL VALVE POSITION
LPBP/IPCVP : IP CONTROL VALVE POSITION
LP By-pass " " "

PRODUCT STANDARD
STEAM TURBINE ENGINEERING

ST 51005
PAGE 9 OF 20

FORM

DOC REV NO.: 0

Annexure-2

Annexure-2

SIGN & DATE

SUPERSEDES INVENTORY No.

COPYRIGHT AND CONFIDENTIAL

The information on this document is the property of BHARAT HEAVY ELECTRICALS LIMITED. It must not be used directly or indirectly in any way detrimental to the instcrest of the company.

SIGN & DATE

INVENTORY No. P-5215

ADDITIONAL DESCRIPTION

A.1.0 Axial Shift: This is for monitoring the axial displacement of the turbine rotor. The service shall consist of;

A.1.1 Sensor: Contactless variable reluctance or eddy current sensor to suit the available ferromagnetic measuring collar (of the turbine); the mounting bracket shall be compatible to the mounting dimension as shown in Figure-1 . The sensor coils shall be housed in oil tight metalic housing with cables in flexible metal conduit. The sensor/mounting bracket shall be mounted on slide guide for simulation of the entire measuring range while the turbine is at stand still.

A.1.2 Measuring Unit: To process the sensor signal for the following linear outputs corresponding to the range of -0.5 mm to + 0.5 mm

i) Three independent 4-20 mA d.c. for a load resistance of 600 ohm each.

ii) Two sets alarm contacts adjustable over 0-100% of the range with each set being capable of being adjusted independently.

A.2.0 Differential Expansion of HPT. Except the mounting arrangements and the size of the sensor ,(shown in figure-2) the other details shall be identical to those of A-1-0.

A-3.0 Differential Expansion of HPT. This is for monitoring the relative expansion of the rotating and stationary parts of the turbine. Other details shall be identical to those of A-1-0 to A-1-2 except that the outputs of the measuring unit shall be linear corresponding to the range of - 5 mm to + 16 mm.

A.4.0 Differential Expansion of LPT. The mounting bracket and the sensor shall be compatible to the mounting dimensions shown in Figure-3 and the outputs of the measuring unit shall be linear corresponding to the range of - 10 mm to + 32 mm. Other details shall be identical to those of A-2-0.

A.5.0 OVERALL Thermal Expansion of HPT. For monitoring the overall thermal expansion of the turbine, the service shall consist of;

Annexure-2

Sign & Date
SUPERSEDES INVENTORY No.
COPY RIGHT & CONFIDENTIAL
The information on this document is the property of BHARAT HEAVY ELECTRICALS LIMITED.
It must not be used directly or indirectly in any way detrimental to the interest of the company.
Inventory No. P-5215
Sign. & Date

A.5.1	SENSOR:	LVDT or variable inductance type of sensor to sense the linear movement (expansion). The sensor shall be mounted on the turbine foundation and mechanically connected to the casing (as shown in Figure -4). The sensor shall be provided with a local indication device also.
A.5.2	MEASURING: UNIT.	Consisting of processing circuits to process the sensor's output signal for derving three independent linear analog outputs of 4-20 mA D.C. corresponding to the range of 0-40 mm.
A.6.0	OVERALL THERMAL EXPANSION OF IPT. :	All details shall be identical to those of A.5.0 to A.5.2,
A.7.0	BEARING PEDESTAL VIBRATION (4 Nos). FOR HP FRONT ,HP REAR,IP REAR AND LP REAR.	For monitoring the absolute mechanical vibration of bearing pedestal with a frequency range of 3 Hz to 1 KHz, the service shall consist of :

Annexure-2

SIGN & DATE

SUPERSEDES INVENTORY No.

COPYRIGHT AND CONFIDENTIAL

The information on this document is the property of BHARAT HEAVY ELECTRICALS LIMITED. It must not be used directly or indirectly in any way detrimental to the interest of the company.

SIGN & DATE

INVENTORY No. P.5215

A.7.1 ~~(Alternative)~~

Sensor: Seismicmass sensor for mounting on the bearing pedestal (mounting shown in fig.6) shall be supplied with 5 mts. long connecting cable alongwith both male and female connectors for further hooking-up.

A.7.2 ~~(Alternative)~~

Measuring Unit: To process the sensor's signal for the following linear outputs a corresponding to the range of 0-160 μ (displacement).

1) Three independent 4-20 mA d.c. for a load resistance of 600Ω each.

2) Compatible output for the measuring unit in co. "A.8.2" ~~(alternative)~~ to compute the absolute shaft vibration.

3) One set of alarm contacts adjustable over 0-100 % of the range.

A.8.0 Shaft vibration (4 Nos.) for HP Front, HP Rear, IP Rear and LP Rear. For monitoring the absolute shaft vibration the service shall consist of:

A.8.1 Sensor : Contactless eddy current type of sensor to detect the relative shaft vibration/any periodic radial displacement of the shaft made of ferrous metal, with respect to bearing ~~shell~~/(mounting arrangement is shown in Figure-7. Sensor shall be supplied with 5 mts. long connecting cable alongwith both male & female connectors for further hooking up with the pre-amplifier (cl. A.8.3.)

A.8.2 Measuring Unit: The absolute shaft vibration shall be computed in this unit with the help of suitable processing circuits to process the ~~amplifiers~~ signal (in Co. A.8.3), and the compatible output signal of the measuring unit in Col. A.7.2 . The measuring unit shall have three independent linear 4-20mA d.c. analong outputs for a load resistance of 600Ω each and one set of alarm contacts adjustable over the range of 0-400 μ (displacement) of absolute shaft vibration.

A.8.3 Pre-amplifier : For transmitting the sensor's signal to the measuring unit (cl. A.8.2) at the control room, the pre-amplifier shall be mounted near the sensing point on the turbine floor. The pre-amplifier shall be required to operate at an environment of max. 100°c and 0-95% relative humidity and shall be housed in dust proof & water-proof encapsulation.

Annexure-2

SIGN & DATE

SUPERSEDES INVENTORY No.

COPYRIGHT AND CONFIDENTIAL

The information on this document is the property of BHARAT HEAVY ELECTRICALS LIMITED. It must not be used directly or indirectly in any way detrimental to the interest of the company.

SIGN & DATE

INVENTORY No.

A.9.0	Absolute Bearing Pedestal vibration (4 Nos) for Gen. front (horiz-ontal), Gen.Rear (Vertical), Gen. Rear (Horizontal).	For monitoring the absolute mechanical vibration of the generator bearing pedestal, the service shall consist of:
A.9.1	Sensor:	Same as in Col. "A.7.1" [illegible] Necessary mounting arrangements shall be provided to detect absolute pedestal vibration in both horizontal and vertical axes on Gen.Front and Gen. Rear bearings pedestals.
A.9.2	Measuring Unit:	The measuring unit shall have three independent linear 4-20 mA d.c. analog outputs for aload resistance of 600Ω each and one set of alarm contacts adjustable over the range of 0-160μ (displacement) of absolute pedestal vibration.
A.10.0	HP Control valve position (2 Nos.)	For monitoring of the valve /position, the service shall consist of:
A.10.1	Sensor:	LVDT or variable inductance type of sensor to monitor the valve movement (valve lift). The sensor shall be mounted on the valve body and mechanically connected to the valve spindle through a flexible cord (as shown in Figure-4).
A.10.2	Measuring Unit:	Consisting of processing circuits to process the sensor's signal for three independent 4-20 mA d.c. linear analog outputs corresponding to the range of 0-50 mm and three sets of alarm contacts adjustable over (0-50%), (20-70%) & (50-100%) of the range.
A.11.0	IP Control valve Position (2 Nos). and LP By-pass control valve position (2 Nos).	The outputs of the measuring unit shall corresponds to the range of 0-95 mm; all other details shall be identical to those of A.10.0 to A.10.2.

Annexure-2

FORM

PRODUCT STANDARD

STEAM TURBINE ENGINEERING

ST 51005

PAGE 14 OF 20

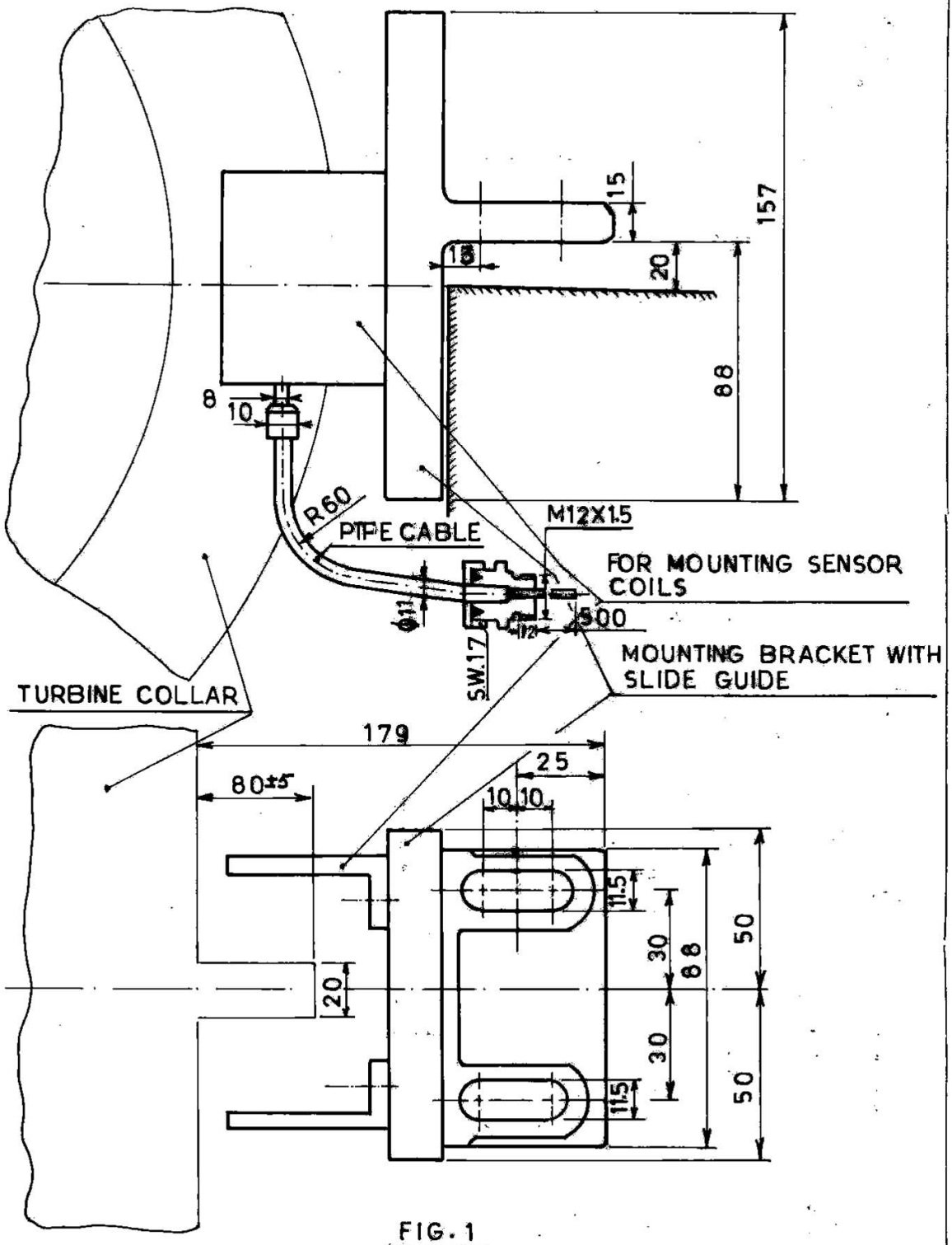

FIG. 1

MOUNTING ARRANGEMENT FOR AXIAL SHIFT AND DIFF. EXP. OF H PT

COPYRIGHT AND CONFIDENTIAL
The information on this document is the property of BHARAT HEAVY ELECTRICALS LIMITED. It must not be used directly or indirectly in any way detrimental to the interest of the company.

SUPERSEDES INVENTORY No.

SIGN & DATE

INVENTORY No. P-5215

Annexure-2

FORM

PRODUCT STANDARD

STEAM TURBINE ENGINEERING

ST 51005

PAGE 15 OF 20

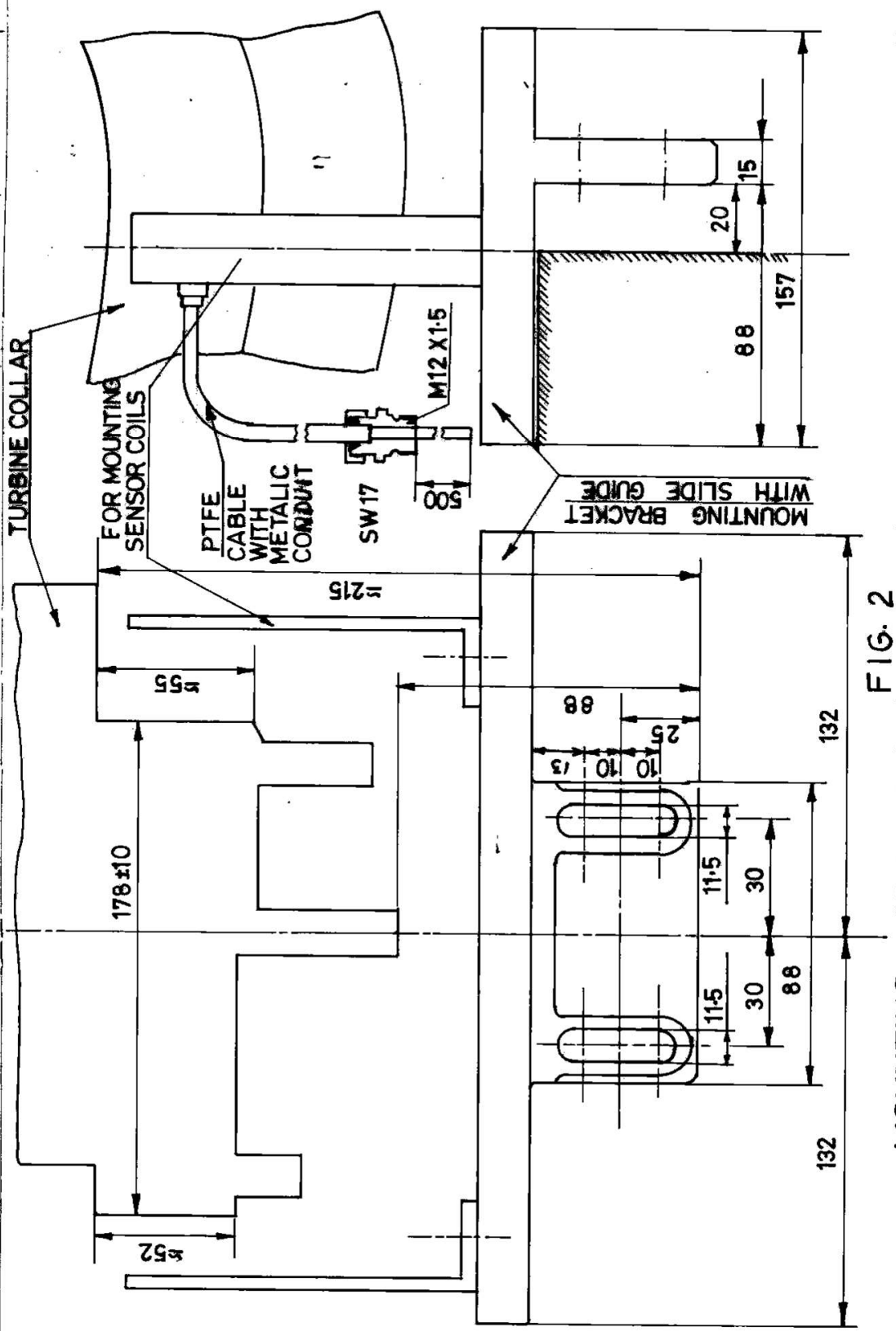

FIG. 2

MOUNTING ARRANGEMENT FOR Diff Exp of IPT

COPYRIGHT AND CONFIDENTIAL

The information on this document is the property of BHARAT HEAVY ELECTRICALS LIMITED. It must not be used directly or indirectly in any way detrimental to the interest of the company.

SUPERSEDES INVENTORY No.

SIGN & DATE

INVENTORY No. P-5215

SIGN & DATE

Annexure-2

FORM

बी एच ई एल

PRODUCT STANDARD

STEAM TURBINE ENGINEERING

ST 51 005

PAGE 16 OF 20

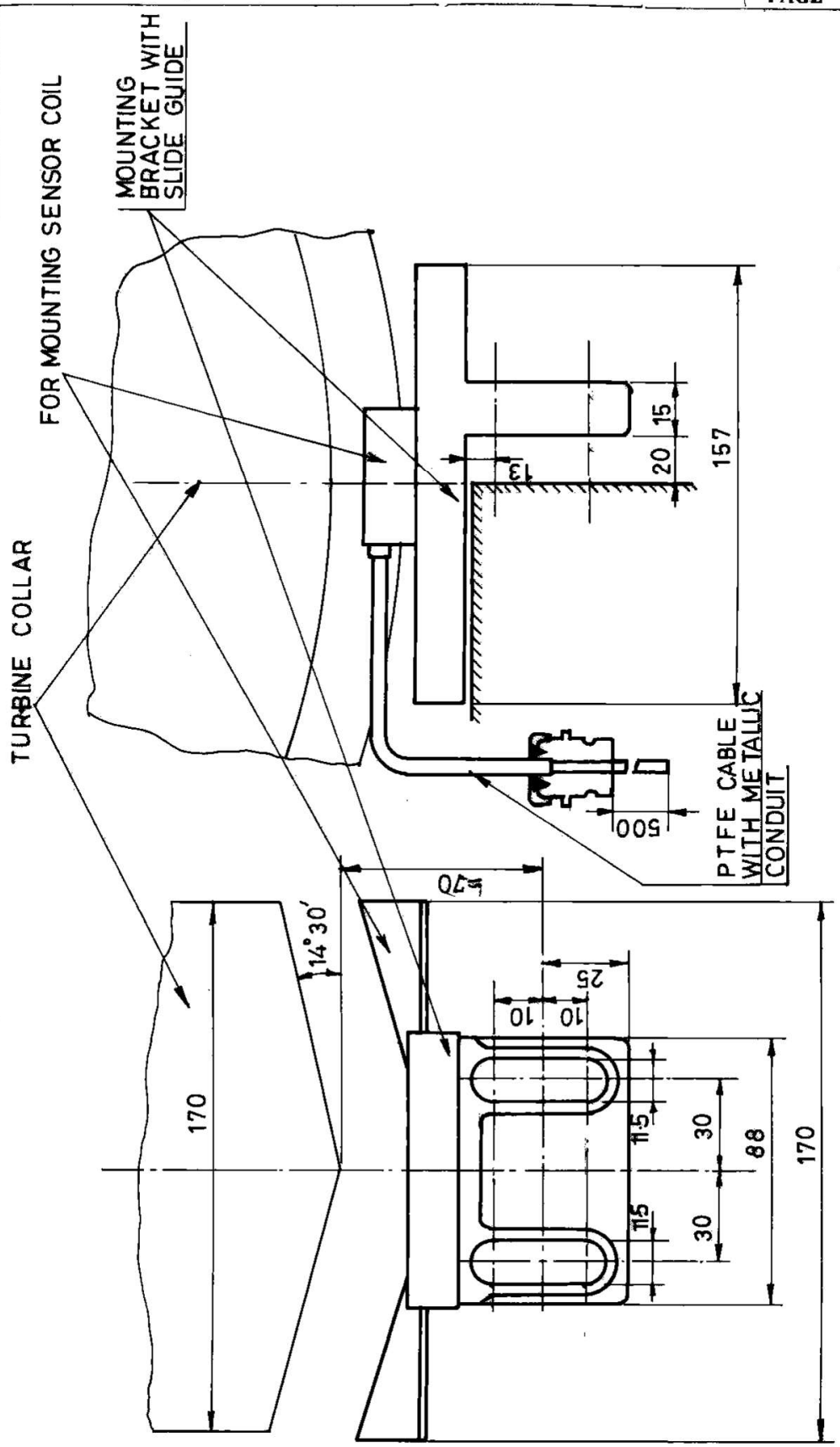

FIG. 3

MOUNTING ARRANGEMENT FOR DIFF. EXP. OF LPT

COPYRIGHT AND CONFIDENTIAL
The information on this document is the property of BHARAT HEAVY ELECTRICALS LIMITED. It must not be used directly or indirectly in any way detrimental to the interest of the company.

INVENTORY No.	SIGN & DATE	SUPERSEDES INVENTORY No.	SIGN & DATE
P.5245			

Annexure-2

FORM

PRODUCT STANDARD

STEAM TURBINE ENGINEERING

ST 51 005

PAGE 17 OF 20

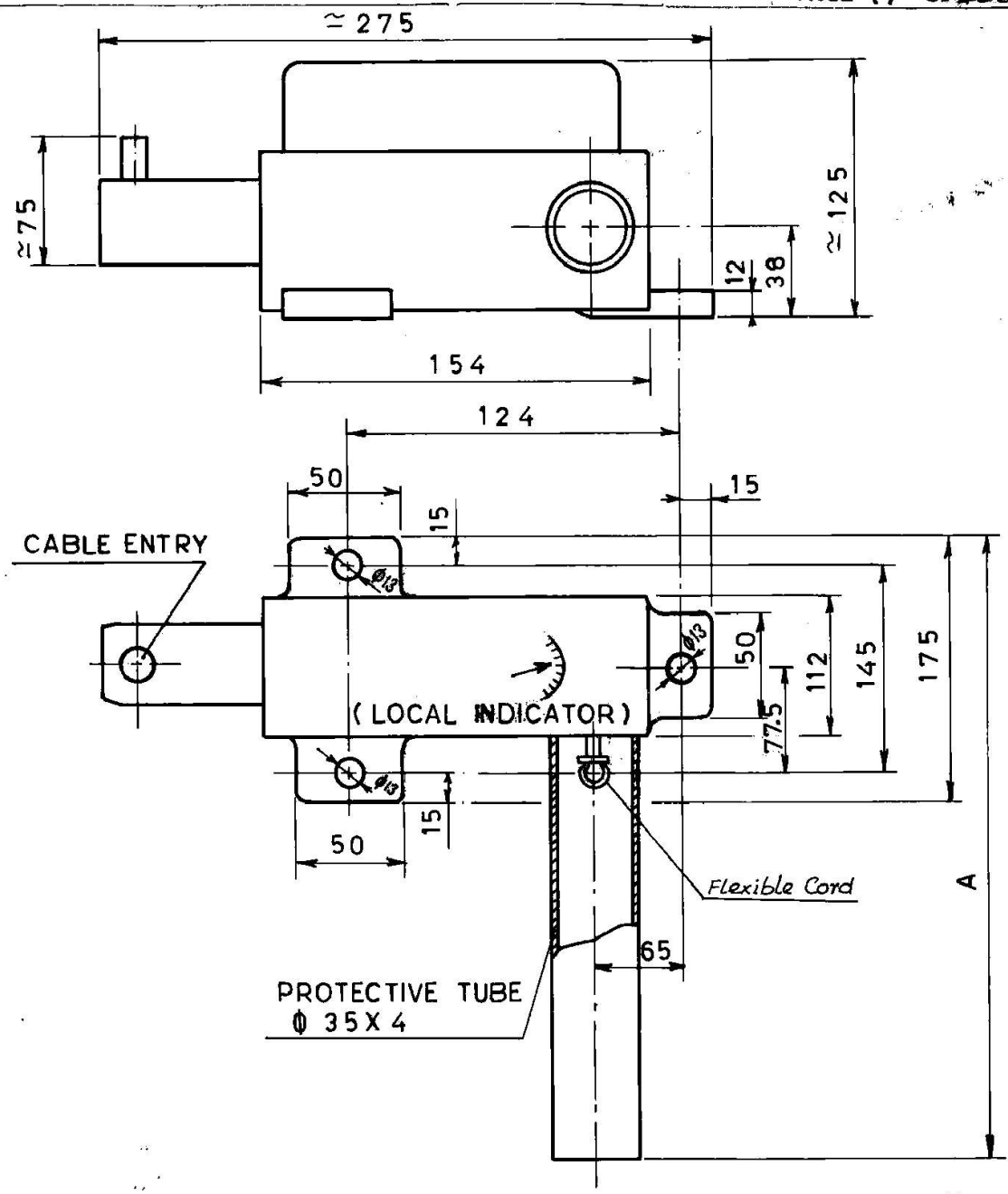

A = 293 mm. FOR OTE AND HP CONTROL VALVE POS.

343 mm. FOR IP CONTROL VALVE POS./LP By-pass CONTROL VALVE POS.

FIG 4

MOUNTING ARRANGEMENT FOR OTE AND VALVE POSITION

SIGN & DATE

SUPERSEDES INVENTORY No.

COPYRIGHT AND CONFIDENTIAL

The information on this document is the property of BHARAT HEAVY ELECTRICALS LIMITED, It must not be used directly or indirectly in any way detrimental to the interest of the company.

SIGN & DATE

INVENTORY No. P-52/5

Annexure-2

FORM

बी एच ई एल

PRODUCT STANDARD

STEAM TURBINE ENGINEERING

ST 51005

PAGE 18 OF 20

SIGN & DATE

SUPERSEDES INVENTORY No.

COPYRIGHT AND CONFIDENTIAL

The information on this document is the property of BHARAT HEAVY ELECTRICALS LIMITED. It must not be used directly or indirectly in any way detrimental to the interest of the company.

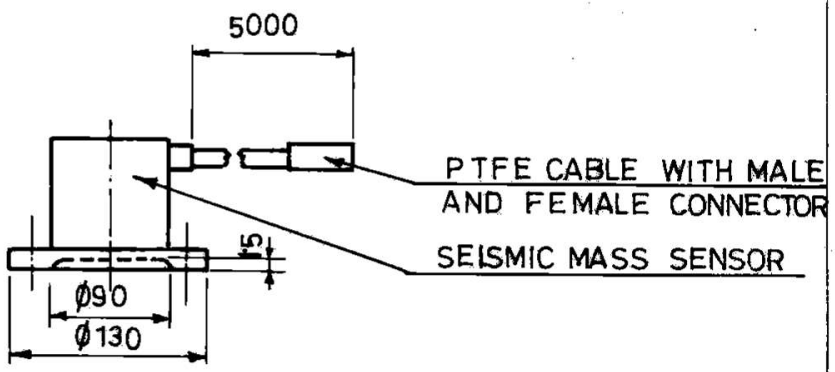

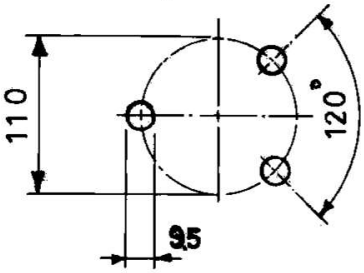

BEARING PEDESTAL VIBRATION

FIG-5

SIGN & DATE

INVENTORY No. P-52/5

Annexure-2

SIGN & DATE
SUPERSEDES
INVENTORY No.
COPYRIGHT AND CONFIDENTIAL
The information on this document is the property of BHARAT HEAVY ELECTRICALS LIMITED. It must not be used directly or indirectly in any way detrimental to the interest of the company.
SIGN & DATE
INVENTORY No.

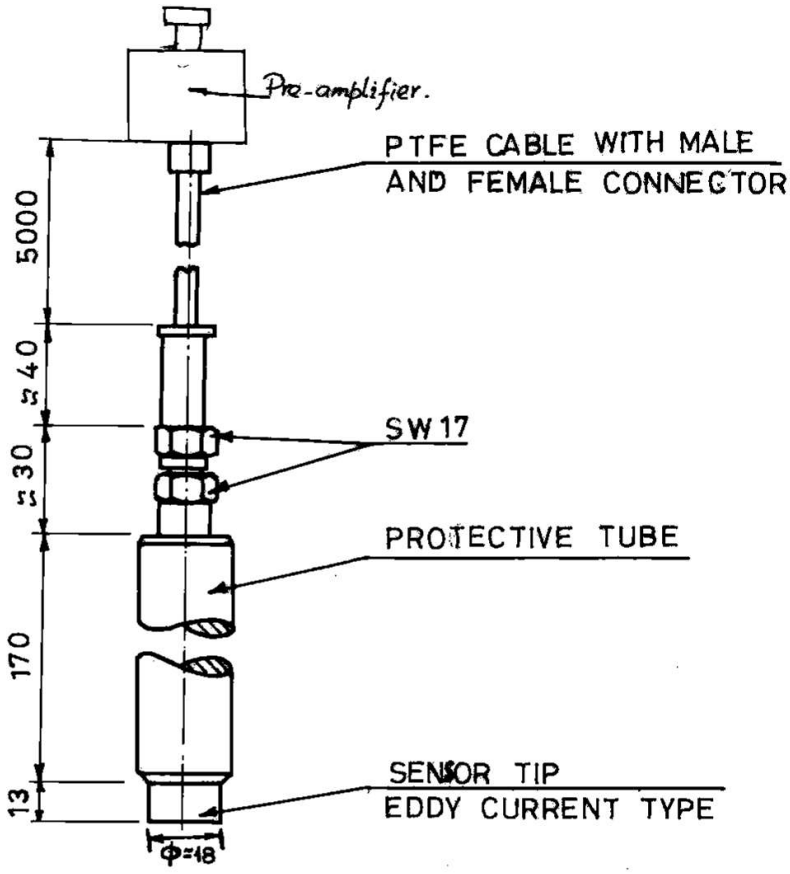

RELATIVE SHAFT VIBRATION

FIG-6

Annexure-2

PRODUCT STANDARD
S T E

ST 51005

RECORD OF CHANGES

REV CODE	NO. OF CHGS	DOCU NO	SHEET NO.	SIGN	DATE	REV CODE	NO. OF CHGS	DOCU NO.	SHEET No.	SIGN	DATE
a	–	STE-94-46	Standard re-affirmed without any change.		28.1.94						
b	–	STE-99-168	STANDARD RE-AFFIRMED WITHOUT ANY CHANGE.		16.6.99						

DISTRIBUTION OF PRINTS

DEPTT.	TGE	STE	AME	DME	HGE	HTE	ACE	HXE	MTE	CPX	IN-SUL SYS.	HLE	TSX	THC	PPX	MCX	CSX
		✓											✓				
DEPTT.	AIX	MSX	CCX	FAX	TFX	TLX	TTX	TTX-ST	TTX-HT	TTX-EM	WT	QAX	QCX	PCM	WC 202	WC. 205	WC. 227
												✓	✓				
DEPTT.	FBM BL II	HTM	STM	W C. 632	ACM	CIM	FBM BLV	SUM	WWM	FBM BL VIII							
											✓						

REVISON									
						DRAWN	VERMA		31.10.80
						WORKED	GHOSH		"
						CHECKED	Dy. A. K. B.		"

INVENTORY NO. P-5215

SIGN & DATE

SUPERSEDES INVENTORY NO.

SIGN & DATE

COPYRIGHT AND CONFIDENTIAL
The information on this document is the property of Bharat Heavy Electricals Ltd.
It must not be used directly or indirectly in any way detrimental to the interest of the company

Annexure-3

Annexure-3

NON-DISCLOSURE AND PROPRIETARY INFORMATION AGREEMENT

BETWEEN

_____**(Name of the Vendor).**, having its registered offices in _____**(Address of Vendor),** registered under the no. _____ of the Companies' register of _____**(Name of Place and Country),** capital stock of _____**(Value),** with a place of business in _____**(Name of Place and Country)** (hereinafter referred to as "_____**(Name of Vendor)");**

AND

Bharat Heavy Electricals Ltd a company incorporated under the Indian Companies Act 1956 having its registered offices at BHEL House, Siri Fort, New Delhi -110 049 and having one of its works at Heavy Electrical Equipment Plant, Ranipur, Haridwar-249403 (Uttarakhand), India registered under the No. 4281 of 1964-65 of the companies register of Delhi, capital stock of Rs 4895.2 million with a place of registered office in New Delhi (hereinafter referred to as "BHEL") hereinafter also referred to individually as "the Party" or collectively as "the Parties".

BACKGROUND

This Agreement sets forth the rights and obligations of the Parties with respect to the use, handling, protection and safeguarding of Proprietary Information that is disclosed by and between the Parties.

WHEREAS

14

A) the Parties wish to pursue exploratory discussions concerning a possible collaboration between them in relation to the Program defined in Exhibit 1;

B) during the ensuing discussions and negotiations it may occur that either Party discloses to the other technical, financial or business information of a proprietary or confidential nature, which the Parties intend to protect against, making it available, by any means to any third person, and other unauthorized use and/or further disclosure by the recipient, in accordance with the terms and conditions set forth herein;

NOW, THEREFORE, the Parties have agreed as follows:

1. The term "Proprietary Information" shall mean any information or data of whatsoever kind of a confidential or proprietary nature, including but not limited to, commercial information, know how and technical information in the form of designs, drawings, concepts, requirements, specifications, software, interfaces, components, processes, or the like, that have been or will be disclosed by either Party to the other pursuant to this Agreement, either in writing, orally or other form, which is designated as "Proprietary" or "Confidential" by the disclosing Party by means of formal declaration or an appropriate stamp, legend or any other written or orally notice .

2. Proprietary Information may be conveyed, without limitation, through any written or printed documents, samples, models, electronic form on disk, tape, other storage media or any other means of disclosing such Proprietary Information that either Party may elect to use during the life of this Agreement, but if an originating Party originally discloses information orally or visually, the receiving Party will protect such information as Proprietary Information to the extent that the originating Party :
   - identifies the Information as Proprietary at the time of original disclosure,
   - summarizes the Proprietary Information in writing .

Information stored in electronic form on disk, tape, other storage media will be adequately marked if a proprietary legend displays when the information originally runs on a computer system and when the information is printed from its data file. Proprietary Information also includes any information which can be obtained by examination, testing or analysis of any hardware or material substance or any component part of such hardware or material substance provided by the Disclosing Party even though the requirements in Clause 1 for marking and designation have not been fulfilled.

3. Each Party, to the extent of its rights to do so, shall disclose to the other only the Proprietary Information which the disclosing Party deems appropriate to fulfil the objectives of this Agreement. The Parties hereby represent that the disclosure of Proprietary Information by and between themselves shall be made in compliance with, and subject to the laws and regulations of the Disclosing Party's country.

4. The receiving Party hereby agrees and covenants that, from the effective date of this Agreement until the expiry date as per article 11 and the following period as per article 12, the Proprietary Information that either Party receives from the other shall:

a) be protected and kept in strict confidence by the receiving Party which must use the same degree of care it uses to protect its own confidential information and in no case less than a reasonable care;

b) be only disclosed to and used by those persons within the receiving Party's organization or that of its parent or controlled companies who have a need to know and solely for the purposes specified in this Agreement, and be treated by such persons or entities with the same degree of care and subject to the same restrictions;

c) to procure that each third party to whom Proprietary Information is disclosed under this Agreement is made aware of the provisions of this Agreement prior to such disclosure to it and that each such third party is

12

bound by obligations of confidentiality which are no less onerous than those contained in this Agreement;

d) neither be disclosed nor caused to be disclosed or made available, either directly or indirectly, to any third Party or persons other than those mentioned in subparagraph b) above or other persons upon which both of the contractual Parties shall agree in an amendment to this Agreement;

e) not to copy, reproduce or reduce to writing any part of such Proprietary Information except as may be reasonably necessary for the purpose referred to in the Recitals of this Agreement

PROVIDED THAT the Receiving Party shall be entitled to make any disclosure required by court order or government or regulatory requirement of the Disclosing Party's Proprietary Information subject to notifying the Disclosing Party as soon as possible of such requirement

5. Any Proprietary Information and copies thereof disclosed by either Party to the other shall remain the property of the disclosing Party and shall be immediately returned or destroyed by the receiving Party upon request.

6. The receiving Party shall have no obligations or restrictions with respect to any Proprietary Information for which the receiving Party can prove that:

a) is in or which comes into the public domain otherwise than as a result of a breach of this Agreement by any person to whom a disclosure of Proprietary Information is made as permitted under this Agreement or of any other duty of confidentiality relating to the Proprietary Information of which the Receiving Party has knowledge; or

b) it has been in its possession without restriction at the time of the disclosure, as evidenced by written documentation in its files; or

c) it has been lawfully received from a third Party without breach of this Agreement; or

d) it has been or is published without violation of this Agreement; or

e) it has been independently developed in good faith by employees of the receiving Party who did not have access to the Proprietary Information; or

f) it has not been properly declared, designated or confirmed as Proprietary or Confidential; or

g) the protection period has expired according to articles 11 and 12 of this Agreement.

7. With respect to any exchange of Proprietary Information which may occur as a result of this Agreement, it is expressly understood and agreed that the persons listed in Exhibit 2 shall, on behalf of the respective Parties, be the exclusive individuals authorized to receive from and transmit to the other Party Proprietary Information under this Agreement. Each Party may replace at any time its respective authorized individuals identified in such Exhibit 2, within its own organization. Any such new designation by a Party shall be made by written notice to the other at the address indicated in such Exhibit 2.

8. Any Proprietary Information which is identified as "Classified Information", or whose export is subject to an export license, shall be identified as such by the disclosing Party at the time of disclosure and the disclosure, protection, use and handling thereof, shall remain subject to the security procedures and restrictions imposed by the disclosing Party's Government.

9. The disclosure of Proprietary Information under this Agreement by either Party to the other shall not be construed as granting to the receiving Party any right, whether express or implied by licence or otherwise, on the matters, inventions or discoveries to which such information pertains, or as granting any trademark, patents, copyrights, trade secret right or other form of intellectual property right.

10. Nothing in this Agreement may be construed as an obligation of either Party to disclose any Proprietary Information to the other, or to enter into any subsequent contractual relationship with such other Party.

11. This Agreement covers the exchange of Proprietary Information which may be made by either Party to the other until ten years from signing of the agreement or any extension thereto which may be agreed upon by the Parties in writing. Proprietary information relevant to the Program detailed in Exhibit 1, already made available to the other contractual Party before the effective date, shall also be protected under this Agreement.

It is understood by the parties that, prior to disclosure, the Disclosing Party shall have obtained any government authorisation needed for the export of the Proprietary Information

12. The expiry of the period contemplated in Article 11 .of this Agreement shall not relieve the receiving Party from complying with the obligations imposed by Article 4 here above with respect to the use and protection of the Proprietary Information, received prior the date of such expiry, for a period of ten (10) years after such expiry.

13. The Parties are independent contractors. Each will bear all costs and expenses in connection with this Agreement. This Agreement is intended to facilitate only the exchange of Proprietary Information and is not intended to be, and shall not be construed to create a teaming agreement, joint venture, association, partnership, or other business organisation or agency arrangement and no Party shall have the authority to bind the other without the other Party's separate prior written agreement .

14. This Agreement shall be governed by and shall be interpreted in accordance with the substantive Indian laws. Irrespective of the foregoing each Party shall remain

bound by the provisions of its own national laws and regulations with respect to the transfer or use of Classified Information or information whose export is subject to an export license.

15. All disputes among the Parties, in connection with or arising out of the existence, validity, construction, performance and termination of this Agreement (or any terms thereof), which the Parties are unable to resolve among themselves, shall be finally settled by an Arbitration. The Arbitration shall be held in Haridwar (India), in English language, in accordance with the rules laid down in the arbitration and reconciliation act of India.

16. The foregoing constitutes the entire Agreement among the Parties with respect to the subject matter hereof and supersedes and cancels all prior representations, negotiations, commitments, undertakings, communications, either oral or written, acceptances, understandings and agreements among the Parties with respect to or in connection with any of the matters to which such Agreement applies or refers.

17. Notices to _____**(Name of Vendor)** shall be made at the following address:

(Complete Address of Vendor)
Attention: Mr. _____**(Name of the Authorised Person of Vendor)**

Notices to BHEL shall be made at the following address:
BHARAT HEAVY ELECTRICALS LIMITED,
HEAVY ELECTRICAL EQUIPMENT PLANT,
Ranipur, Haridwar-249403 (Uttarakhand), India
Attention: **(Name of the PPX Incharge)**

18. The effective date of this Agreement shall be the date of the last signature appearing herein.

8

IN WITNESS WHEREOF, each of the Parties has caused this Agreement, to be executed by its duly authorized officer.

Date :

Signed for and on behalf of	Signed for and on behalf of
(Name of Vendor)	BHEL
By:	By:
Title:	Title:
Signature:	Signature:

7

EXHIBIT 1

to the

NON-DISCLOSURE AGREEMENT

between

_____**(Name of Vendor)**

and

BHARAT HEAVY ELECTRICALS LIMITED

dated:

_____

The Non Disclosure Agreement covers the exchange of Proprietary Information which may occur during the discussions and negotiations in view of a possible cooperation between the Parties in the following programs:

-Description of Material or Services for which the order is placed

_____**(Name of Vendor)** list of products that require an exchange of Proprietary Information which may be occur during the discussions and negotiations in view of a possible cooperation for the above programs :

6

EXHIBIT 2

to the

NON-DISCLOSURE AGREEMENT

between

_____**(Name of Vendor)**

and

Bharat Heavy Electricals Ltd.

dated:

Personnel of the Parties authorized to receive and/or transmit Proprietary Information under this Agreement:

For **(Name of Vendor)**	For Bharat Heavy Electricals Ltd.
(**Name of Person**)	Mr.
Tel.	Tel. 01334
Fax	Fax 01334
Address.	Address. Main Administration Building BHEL, HEEP, Haridwar India
	Mr.
Tel.	Tel. 01334
Fax	Fax 01334
Address	Address. Main Administration Building BHEL, HEEP, Haridwar India

Annexure-4

As per Government Public Procurement Order No. P-45021/2/2017-BE-II dt. 15.06.2017 & P-45021/2/2017-PP (BE-II) dated 28.05.2018, it is hereby certifying that we

…… …
(supplier name) are local supplier and will meet the requirement of minimum local content (50%) defined in as above orders for the material against Enquiry No.
……

Details of location at which local value addition will be made is as follows:

……
……

We also understand, false declarations will be in breach of the Code of Integrity under Rule 175(1)(i)(h) of the General Financial Rules for which a bidder or its successors can be debarred for up to two years as per Rule 151 (iii) of the General Financial Rules along with such other actions as may be permissible under law.

Seal and Signature of Supplier