FIRST ANGLE PROJECTION

(ALL DIMENSIONS ARE IN mm)

DRG.NO. 1 456 00 50 880

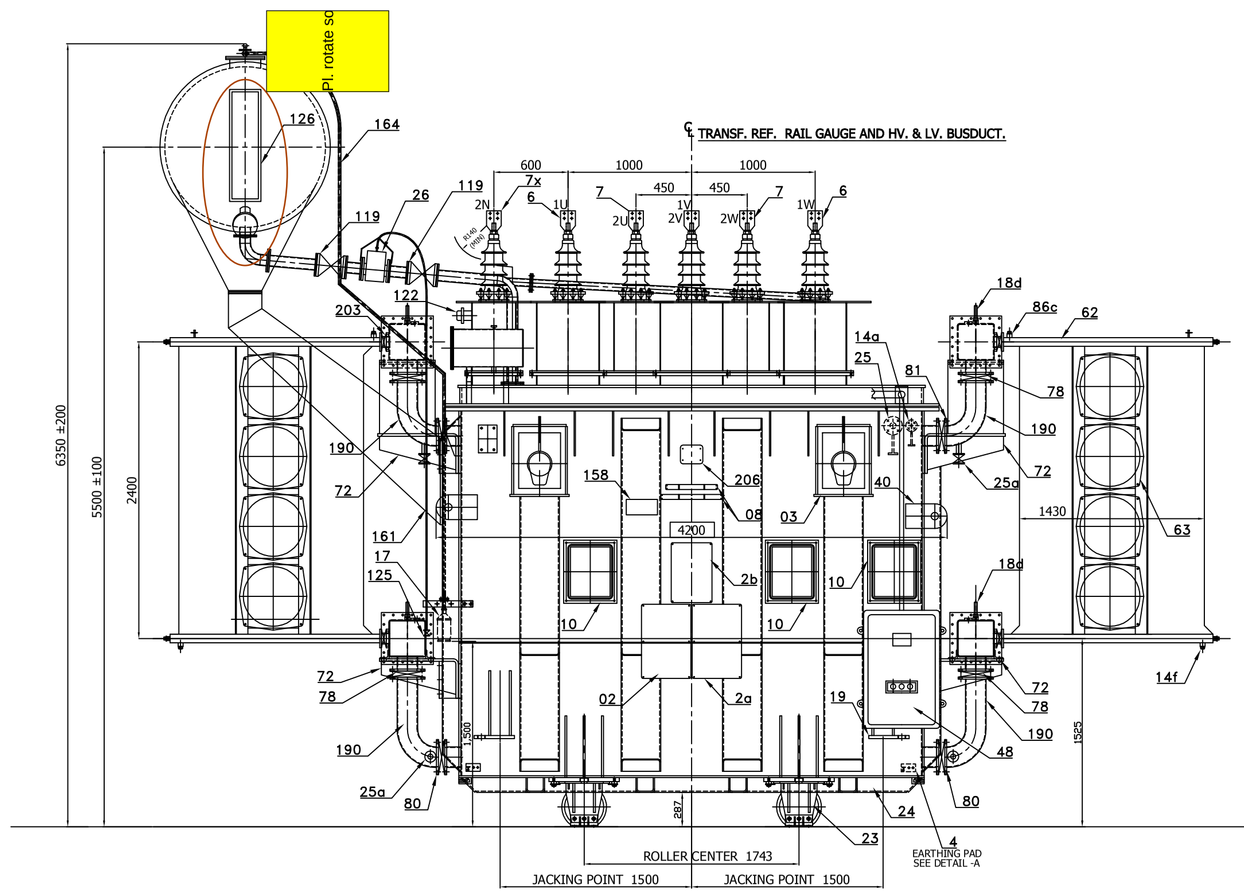

L.V. SIDE

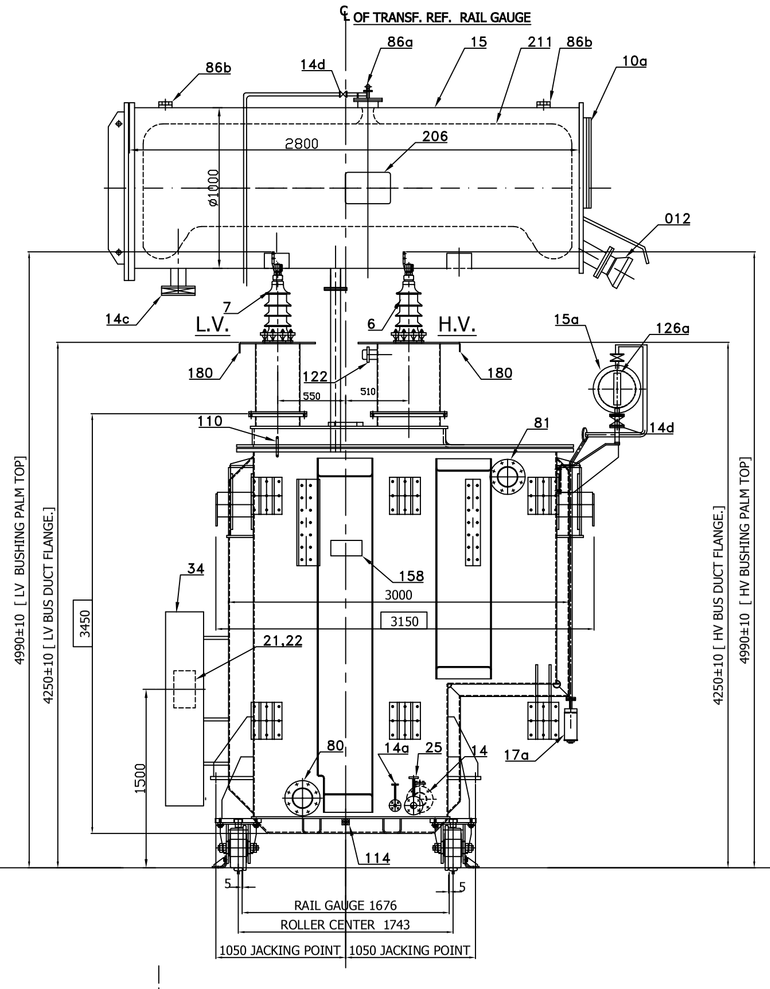

H.V. SIDE

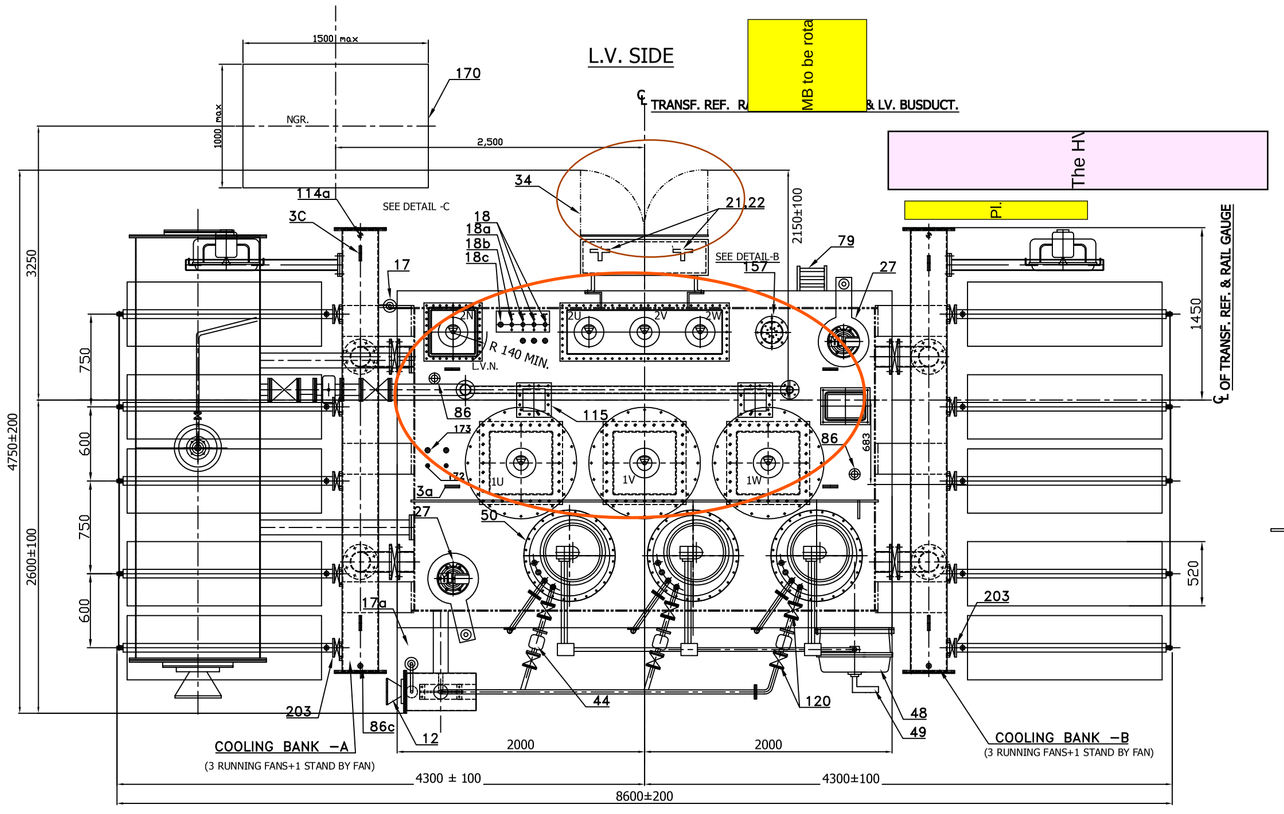

H.V. SIDE

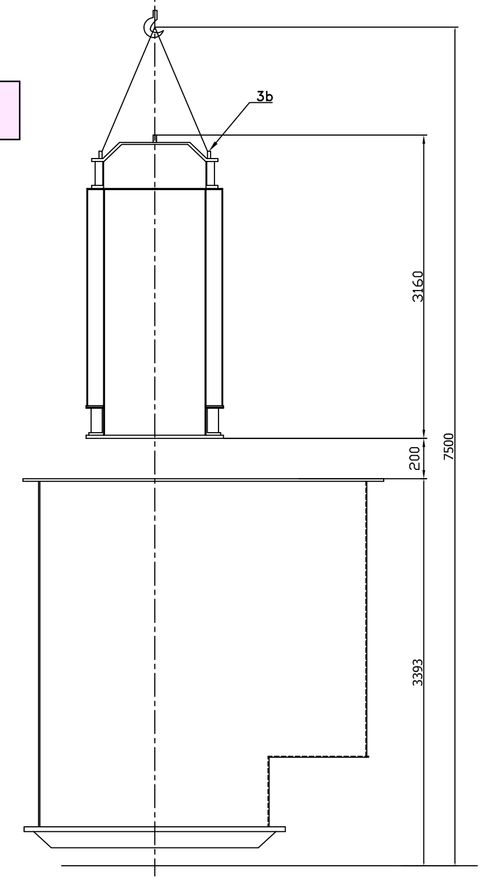

UNTANKING TRANSF. HEIGHT

TABLE OF FITTINGS

	IT. NO.	DESCRIPTION	QTY.
TRANSFORMER	2	RATING & DIAGRAM PLATE (BILINGUAL)	01
	2a	VALVE SCHEDULE PLATE	01
	2b	OIL FLING INSTRUCTION PLATE	01
	3	LIFTING LUG	04
	3a	COVER LIFTING EYES	04
	3b	CORE AND WINDING LIFTING LUGS	04
	4	EARTHING ARRGT FOR TANK	02
	8	NAME PLATES HINDI AND ENGLISH (ONE EACH)	02
	10	INSPECTION COVERS FOR TANK/COVER,	04
	14	100 NB DRAIN/SLUDGE REMOVAL GATE VALVE	01
	14a	SAMPLING VALVE 15 NB (1 ON TOP & ON BOTTOM) 2 IN SERIES	02+02
	18	POCKET FOR OIL TEMPERATURE INDICATOR	01
	18a	POCKETS FOR WINDING TEMPERATURE INDICATOR	02
	18b	ORDINARY THERMOMETER WITH POCKET	01
	18c	POCKETS WITH RTD-WTI (M/S PERFECT CONTROL MAKE)	03
	19	JACKING PADS (SUITABLE FOR TOTAL WEIGHT WITH OIL)	04
	21	O.T.I. (IN COOLER CONTROL CABNET)	01
	22	W.T.I. (IN COOLER CONTROL CABNET)	02
	23	320 DIA SINGLE BI-DIRECTIONAL ROLLERS	04
	24	SKIDS(BOTH SIDE SECTIONS)	01
	25	FILTER VALVE WITH SAMPLING ATTACHMENT (TOP&BOTTOM) 50 NB WITH THREADED MALE ADOPTER	02
	27	PRESSURE RELIEF DEVICE WITH RAIN HOOD AND OIL COLLECTING TRAY OPERATING PRESSURE 0.49 ± 0.07 Kg/SQ. CM	02
	34	COOLER CONTROL CABINET	01
	40	WAGON CANNING LUG	04
	79	LADDER WITH LOCKING DEVICE	
	80	OIL INLET BUTTER FLY VALVE 150 DIA.	
	81	OIL OUTLET BUTTER FLY VALVE 150 DIA.	01
	86	AIR RELEASE VALVE (1/2" BSP)	01
	110	TOP TANK & BOTTOM TANK SHORTING LINK	01
	114	1/2" BSP SLUDGE REMOVAL PLUG ON BOTTOM TANK	02
	115	HOLE FOR CLAMPING CORE AND COIL TO TOP TANK LOCKING	02
	157	EARTHING CONNECTION BETWEEN CORE & END F/F TANK	02
	158	IMPACT RECORDER	02
	172	SPARE POCKET FOR WTI	02
	173	SPARE POCKET FOR RTD	02
TAP CHANGER	44	OIL SURGE RELAY (OLTC) WITH RAINHOOD	03
	48	OLTC DRIVING UNIT	01
	49	OLTC MOTOR DRIVING HANDLE	01
	50	ON LOAD TAP CHANGER	03
	170	NGR WITH SUPPORTING STRUCTURE AND COPPER FLAT	01SET
CONSERVATOR & ITS PIPE WORK	10a	INSPECTION COVER ON MAIN CONSERVATOR	01
	12	MAGNETIC OIL GAUGE WITH LOLA FOR MAIN & OLTC CONSERVATOR	01+01
	14c	50 NB DRAIN GATE VALVE FOR MAIN CONSERVATOR	01
	14d	15 NB DRAIN GATE VALVE FOR AUX. CONSERVATOR & 15 NB BREATHER VALVE FOR MAIN CONSERVATOR	1+1
	15	OIL CONSERVATOR MAIN (1000 DIA WITH AIR CELL)	01
	15a	AUX CONSERVATOR 300 DIA BHEL MAKE	01
	17	DEHYDRATING BREATHER FOR MAIN CONSERVATOR (NON-CARCINOGENIC COBALT FREE SILICA GEL TYPE)	01
	17a	DEHYDRATING BREATHER FOR AUX. CONSERVATOR (NON-CARCINOGENIC COBALT FREE SILICA GEL TYPE)	01
	26	BUCHHOLZ RELAY 80 NB WITH RAINHOOD	01
	86a	AIR RELEASE PLUG 1" BSP FOR AIR CELL	01
	86b	AIR RELEASE PLUG 3/41" BSP FOR MAIN CONSERVATOR	02
	119	ISOLATING VALVE FOR BUCHHOLZ RELAY 80NB (1 GATE + 1 B/F)	02
	120	TAP CHANOLR ISOLATING GATE VALVE 25 NB	06
	125	GAS COLLECTING DEVICE	01
	126	PRISMATIC OIL GAUGE FOR MAIN CONSERVATOR	01
	126a	PRISMATIC OIL GAUGE FOR AUX. CONSERVATOR	01
	161	BUCHHOLZ GAS RELAY DEVICE PIPE 6 DIA (COPPER)	01
	164	BREATHER PIPE 25 NB (FOR MAIN &AUX. CONSERVATOR)	02
	206	MONOGRAM	01
	211	ATMOSEAL ARRGT. CONSERVATOR	01
	86c	AIR RELEASE PLUG (BSP.) FOR MAIN CONSERVATOR, TOP & BOTTOM HEADER	05
	14f	DRAIN PLUG FOR RADIATOR 3/4"BSP	10
COOLING SYSTEM	18d	THERMOMETERS ON TOP & BOTTOM HEADER PIPE WORK	04
	62	RADIATOR WITH LIFTING LUG.	10
	63	FAN & MOTOR SIZE 18" (6 RUNNING +2 STAND BY)	08
	86c	AIR RELEASE PLUG (1/2"BSP) ON RADIATOR & P/WORK	10+4
	114a	DRAN PLUG (3/4" BSP) ON COOLER PIPE WORK	04
	25a	50 NB FILTER CUM SAMPLING GATE VALVE FOR TOP & BOTTOM RADIATOR BANK PIPE WORK	04
	72	HEADER PIPE SUPPORT (TOP & BOTTOM).	04
	190	TOP AND BOTTOM OIL PIPE (150 NB)	01
	203	80 NB RADIATOR ISOLATING BUTTERFLY VALVE	20
	78	150 NB TOP & BOTTOM HEADER BUTTER FLY VALVE	04
	3C	LIFTING LUGS AT TOP & BOTTOM HEADERS	08
TURRETS & BUSHINGS	6	36 KV 3150 AMP. HV LINE PORCELAIN BUSHING (BHEL MAKE)	03
	7	36 KV 3150 AMP. LV LINE PORCELAIN BUSHING (BHEL MAKE)	03
	7x	36 KV 3150 AMP. LVN PORCELAIN BUSHING (BHEL MAKE)	01
	122	CT TERMINAL BOX (LV NEUTRAL & HV)	01+1
	180	TERMINAL MARKING PLATE	09

TABLE OF REFERENCE DRAWINGS

SRL. NO.	DESCRIPTION	NTPC DRAWING NO.	DRG.NO.
01	OUT LINE GENERAL ARRANGEMENT	9549-501-PVE-B-10	14560050880
02	RATING & DIAGRAM PLATE	9549-501-PVE-B-12	14561951484
03	VALVE SCHEDULE PLATE	9549-501-PVE-B-13	14561951485
04	FOUNDATION PLAN OF TRFR.	9549-501-PVE-V-03	24560050982
05	LOADING GAUGE DIAGRAM & BI-DIRECTION ROLLER	9549-501-PVE-B-11	24560050983
06	BUS DUCT MOUNTING FLANGE	9549-501-PVE-B-16	34560052025
07	36 KV 3150 AMPS HV,LV & LVN PORCELAIN BUSHING	9549-501-PVE-B-14	34560052020
08	INTERNAL SECTION SKETCH	9549-501-PVE-L-02	34560052022
09	CHARACTERISTICS OF BUSHING CT	9549-501-PVE-N-04	34560052023
10	OVERFLUXING WITHSTAND DURATION CURVE	9549-501-PVE-V-02	34560052024

TABLE -III APPROXIMATE OIL CAPACITIES	LITRES
OIL IN TANK BUSHING, TURRETS AND OLTC	17600
OIL IN CONSERVATOR (MAIN & AUX.)	1275
OIL IN RADIATORS	2550
OIL IN PIPE WORK & HEADERS	800
TOTAL OIL QTY.	22225

TABLE -IV: TRANSFORMER WEIGHT DETAILS	WT. IN KG.
CORE & WINDING	40000
TANK, FITTING & ACCESSORIES	19300
TOTAL OIL	19700
TOTAL WEIGHT INCLUDING OIL	79000
SHIPPING WEIGHT OF TRANSFORMER (GAS FILLED)	50000
TRANSFORMER UNTANKING WEIGHT	40000

	CLEARANCES IN AIR	
	PHASE TO PHASE	PHASE TO EARTH
HV	-	320
LV & LVN CU FLAT	280	140

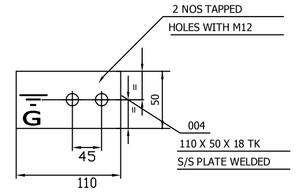

DETAIL 'A'

EARTHING TERMINAL PLATE ON TANK

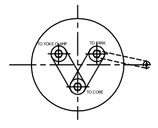

DETAIL- B

EARTHING TERMINAL BOX (2KV TANK/CLAMP/CORE ISOLATION)

NOTES:-

1. WHEN REFERRING THE O.G.A. DRG. PLEASE QUOTE MVA & W.O. NO.
2. DIMENSIONS MARKED THUS ▭ ARE OVER ALL SHIPPING DIMENSIONS
3. WIRING FROM INSTRUMENTS ,CTS,ETC. NOT SHOWN FOR CLARITY.
4. JACK POINT MARKED THUS * ARE FOR UNLOADING OF TRANSFORMER.
5. TRANSFORMER OIL SHALL BE SUPPLIED CONFORMING TO NTPC SPEC
6. ALL HARDWARES- HDG/SS.
7. OUT SIDE PAINT SHADE SHALL BE RAL 5012 AS PER NTPC PAINING SPECIFICATION..
8. THE DESIGN FEATURES SHOWN ON THIS DRG. (IN LINE WITH IS-2026/IEC-60076 AND NTPC SPECIFICATION) MEETS THE STATUTORY REGULATORY & SAFETY REQUIREMENTS IN RESPECT OF EARTHING ARRANGEMENTS DANGER AND OTHER LABELS PROVISION OF PRESSURE RELIEF DEVICE, CLEARANCES IN AIR PROVISION OF GAS AND OIL ACTUATED RELAY.
9. ALL THE MAKES SHALL BE SUBJECT TO NTPC QA APPROVAL.
10. ALL GASKET IN CONTACT WITH OIL SHALL BE OF NITRYL RUBBER.
11. EARTHING LINK SHALL BE PROVIDED ON NON-ELECTRICALLY CONNECTED ITEM LIKE M. BOX, DM BOX ETC.
12. SLOPE SHALL BE PROVIDED ON TANK TOP, M.BOX, DM BOX TO AVOID RAIN WATER ACCUMULATION.
13. NGR CONNECTION WITH LVN IS IN BHEL SCOPE AND NO ADDL. FOUNDATION SHALL BE PROVIDED FOR COPPER FLAT SUPPORT
14. NO DIMENSIONAL TOLERANCE APPLICABLE ON FOUNDATION. ON BUSDUCT, DIMENSIONAL TOLERANCE SHALL BE AS PER BUSDUCT DRG.
15. OLTC SUCTION VALVES, OLTC CONSERVTAOR DRAIN VALVE AND EQUILISER PIPES ARE PROVIDED BUT NOT SHOWN IN OGA
16. EACH HEADER IS PROVIDED WITH LIFTING LUG.

REV	DATE	ALTERED	MSC
03	11.02.15	CHECKED	PP
DRAWING REVISED AS PER NTPC COMMENTS.			

REV	DATE	ALTERED	MSC
02	06-08-15	CHECKED	VJ
DRAWING REVISED AS PER NTPC COMMENTS.			

REV	DATE	ALTERED	MSC
01	08-03-15	CHECKED	VJ
DRAWING RE-DRAWN AS PER NTPC COMMENTS.			

W.O. 71193P17700

PO.NO.:- CS-9549-501-2-FC-NGN-6207 DATED 10.09.2014

SPEC. NO. - CS-9549-501-2

STATUS - U

DISTRIBUTION

BHEL TRE-1 TRX-1 TRM-3

NTPC

NTPC DRG. NO. 9549-501-PVE-B-10 | BHEL DRG. NO. 1 456 00 50 880

CUSTOMER : M/S NTPC

PROJECT : NTPC DARLIPALI STPP -1 (2x800 MW)

BHARAT HEAVY ELECTRICALS LTD. JHANSI

	NAME	SIGN	DATE	NO. OF VAR
DRN	MSC.		09. 02. 15	-
CHD				
APPD	V.J			

TITLE: OUT LINE GENERAL ARRGT.

45 MVA, 23.5/11.5 KV ONAF/ONAN COOLED UNIT TRANSFORMER

ITEM NO	NO. OF ITEM
-	-

DEPT | SCALE NTS | DRAWING NO. 1 456 00 50 880 | REV. 03

SIGN

DATE

SHEET 01 OF 01 | REV. 00

SIZE A1

PRODUCED BY AN AUTODESK EDUCATIONAL PRODUCT

THE INFORMATION ON THIS DOCUMENT IS THE PROPERTY OF BHARAT HEAVY ELECTRICALS LIMITED. IT MUST NOT BE USED DIRECTLY OR INDIRECTLY IN ANY WAY DETRIMENTAL TO THE INTEREST OF THE COMPANY.

REF.DRG.NO. PDV1234

SIGN.DATE