BHARAT HEAVY ELECTRICALS LIMITED
HEEP HARIDWAR INDIA-PIN 249403
FAX NO: 0091 1334 226462/223948
PHONE NO: 0091 1334 284520

Tender No.: X/6620/2017/0478/C/1 **Due Date: 25.01.2018**

Sub: BHEL-HEEP/OPEN-TENDER (LP Inner Casing-Fabrication)

The Heavy Electricals Equipment Plant (HEEP) located in Haridwar, India is one of the major manufacturing plants of Bharat Heavy Electricals Ltd. The core business of HEEP includes design and manufacture of large steam and gas turbines, turbo generators and so on.

Sealed tenders with the Tender No. and opening date clearly super scribed on the cover are invited from the manufacturers (registered as well as unregistered) for the supply of the following items:-

Tender No	Item Description	Qty (Nos)
X/6620/2017/0478/C/1	**LP Inner Casing-Fabrication (01074158700-00) With BHEL Material**	**3**

The tender documents & Specification of item can be downloaded from our web site www.bhel.com or www.bhelhwr.co.in or www.tenders.gov.in submitted with requisite EMD.

Only those vendors who fulfill the Minimum Qualifying Requirements (as per Annexure-II) will be considered for further technical evaluation.

This notification shall be published in national & global newspapers. **The last date for downloading tender documents shall be 24.01.2018 & opening of tender shall be 25.01.2018.** Tenders will be received up to **01.45 P.M. on 25.01.2018** and opened on the same day at 2.00 P.M. in the Tender Room**. Please note that tender received after due date & time (01.45 PM on 25.01.2018) will not be opened.** BHEL will not be responsible for any type of postal / courier delay.

Intending vendors must submit the requisite EMD Rs. 2,00,000/- (Rupees Two Lacs Only) for indigenous vendors (or equivalent amount in foreign currency for foreign vendors) in the form of pay order or bank draft while submitting the tender documents as detailed in "Instruction to Bidders", after downloading from this web site.

EMD is waived off for-

a) Central/ State – PSUs/ Government departments
b) As per government guidelines, MSE suppliers are exempted for submission of EMD (Valid Documentary proof against MSE must be submitted along with offer to avail the benefits).
The vendors registered for item LP Inner Casing-Fab. as per PMD No. AF101 with BHEL, Haridwar are only exempted from EMD.

The total quantity may undergo change at the time of ordering.
The details of each item with required delivery are given in **Annexure-IV (Details of Items)**

Please submit your Techno-Commercial offer only for the above requirement subject to our terms and conditions.

IN ADDTION TO VENDORS MENTIONED ABOVE, OFFERS SHALL ALSO BE CONSIDERED ONLY THOSE VENDORS WHO WILL SUBMIT EMD. [PLEASE SUBMIT DRAFTS FOR EMD DRAWN IN FAVOUR OF BHARAT HEAVY ELECTRICALS LTD. HEEP, HARIDWAR IN ANOTHER ENVELOPE SUPERSCRIBED WITH BOLD LETTERS "EMD" at 2 PM on the due date in the presence of authorized representative of the bidders who may like to be present. The authorized representative should bring authority letter from their parent company (Manufacturer) for attending the bid opening.

KINDLY READ "INSTRUCTIONS TO BIDDERS." QUOTATION NOT IN ACCORDANCE WITH THE INSTRUCTIONS ARE LIABLE TO BE DISQUALIFIED AND IGNORED.

INSTRUCTIONS TO BIDDERS FOR OPEN TENDER

DEFINITION

Registered Vendors - Are those who are registered with BHEL, Haridwar for procurement of LP Inner Casing-Fab.

Un-registered Vendors - Are those who are not registered with BHEL, Haridwar for procurement of LP Inner Casing-Fab.

MINIMUM QUALIFICATION REQUIREMENT

LP Inner Casing Fabrication

Following are the mandatory requirement. Offer of Vendors not meeting these requirements will not be considered.

- **Technical Requirements-**

Pre-Qualification requirements for LP Inner Casing Fabrication

Sl. No.	Technical Requirement				Vendor's confirmation (Y/N)
A	The vendor should have **experience of manufacturing same / similar size fabricated assemblies. P.O./ W.O. reference of customers to whom same / similar size of assemblies have been supplied** in the **past five years** to be submitted by the vendor along with the offer mentioning **contact details of the customer**. Vendor should also submit **relevant photographs in support of the same**. The following information should be submitted by the vendor-				
	1. Availability of EOT crane capacity 35 Tons having hook height 7.0 Meters (min) for turning of the assembly.				
	2. Availability of bed plate size 5.0X6.0 Meters / level accuracy within 3.0mm (max)				
	3. Availability of bending / rolling machine for 30mm plate thickness with 3.0 Meters width feasibility.				
	4. Availability of Welding process and welder qualifications (WPS/PQR & WPQ) duly witnessed by independent reputed third party preferably M/s Llyods / TUV.				
	5. Availability of NDT (DPT / UT/ RT) facilities in house / outsource with the qualified person.				
B	BHEL reserve the right to verify information submitted by the vendor. In case the information to be found false / incorrect, the offer shall be rejected.				
C	Technical evaluation of only those offers will be done who qualify as per the above qualifying conditions. Other offers shall not be considered.				
04	Name of Vendors		Contact Person details		
Note- *This is applicable for both registered as well as un-registered vendors.*					

- **Quality Requirements-**

  - All vendors to confirm, endorse & return back QP No “QP/QA/170058, Rev 00”.
  - Inspection by BHEL/BHEL nominated inspection agency as per drawing/Standard and quality plan requirements.

Note- Technical as well as quality requirements is applicable for both registered as well as un-registered vendors.

Vendors must fill up Annexure– II in confirmation to above Minimum Qualifying Requirements and quality requirement.

ESSENTIAL INSTRUCTIONS

1. **Only those bids will be opened which have been submitted with requisite EMD.**
2. **All un-registered vendors shall be approved by BHEL, if found suitable, on the basis of data furnished by them in Supplier Registration Form (SRF) Foreign Vendors or Indigenous Vendors.**
3. **BHEL team may visit the vendor (s) works for verification of capability and capacity claimed in tender documents/offer (s).**
4. **The tender document must comprise of four envelopes:**
   - **i) Envelope I: EMD or NSIC Certificate for exemption of EMD.**
   - **ii) Envelope II: Pre- Qualifying Requirement & Supplier Registration Form.**
   - **iii) Envelope III: Techno -Commercial Bid.**
   - **iv) Envelope IV: Price Bid.**

   It is essential that all the four envelopes comprising of the above information should be submitted on the due date otherwise the authenticity of tender date & time will be defeated. In view of the above, it is proposed that offer should comprise of the above four envelopes at the time of tender opening.
5. The tenders shall be submitted in three parts
   - i. Part I - Techno -Commercial Bid,
   - ii. Part II - Price Bid
   - iii. Part III - Vendor Registration Form

   as described below on or before the due date. Vendor Registration Form shall be submitted by unregistered vendors only.
6. **The Quotation should be from the Principal / Original Manufacturer, failing which the quotation is likely to be ignored. In Case the quotation is submitted through agent, the quotation must accompany original authorization letter.**
7. Documents submitted with the offer/bid by the bidder shall be signed and stamped in each page by authorized representative of the bidder. In case the bid is submitted by FAX, the bidder shall simultaneously ensure submission of signed and stamped (in each page) original bid to BHEL. If the documents are received in soft form, the same should be transmitted through vendor's authorized e-mail followed by the signed and stamped copy of the same documents. Documents not signed and stamped in each page by the authorized signatory of the bidder, shall not be accepted and considered for evaluation of the bid.
8. Any corrections / amendments shall be properly & fully authenticated with signature. No overwriting is acceptable.
9. In case of ordering, manufacturing plan should be submitted for BHEL approval.
10. Part-I containing techno-Commercial bid and part-III containing Vendor Registration Form will be opened on the date and time specified in the tender notice in the presence of those tenders who wish to attend.
11. Part-II (Price Bids) along with supplementary price bids, if necessary, will be opened at a later date of only those bidders whose techno-commercial bid has been found acceptable.
12. Suitability of delivery shall be the important criteria for evaluation of techno commercial bid and the bids falling within the delivery period and meeting the last delivery requirement.
13. Currency exchange rate will be applicable on the date of opening of Part-I (Techno-commercial Bid) for evaluation purpose.
14. **Evaluation of Bid: - The bid shall be evaluated**
    - **a. Cost to BHEL basis. (Basic Cost + Insurance + Transportation + Duty)**
    - **b. The loading, if any, on account of LD penalty, payment terms or any other cost determined at later stage, which shall be communicated to the vendor.**
    - **c. Evaluation of comparative statement will be done on item wise basis after combining DEEC & PI quantity and order will be placed accordingly.**
15. Tenders when finalized shall be in the name of the bidder only and change of name during tender evaluation (without certificate from registrar of company) and after submission of the tender is liable to make the offer ineligible for participation.
16. All test certificates / Guarantee certificates to be submitted in TRIPLICATE along with dispatch documents.
17. BHEL reserves the right to open the price bid (part-II) along with the opening of techno-commercial offer at its option and in that case vendor will be informed accordingly.
18. **BHEL reserves the right to go for reverse auction. Vendors are requested to give their best price. In case of failure of reverse auction the paper bid shall be processed. Bidder should clearly indicate their acceptance for reverse auctioning. 'Guidelines for Reverse Auction are available at following link http://www.bhel.com/vender_registration/vender.php**
19. Total weight--/Gross/Net in Kg & also package size essentially should be indicated if not exact then approximate.
20. BHEL will evaluate the technical bids against essential criteria/requirements. BHEL may seek clarifications, if required, from the qualified bidders only. These clarifications will be communicated to the

eligible vendors. **The offers of those bidders, who are unable to respond in specified time frame, are likely to be ignored.**

Note: Please visit our site www.bhelhwr.co.in for General Instructions and Standard Terms & Conditions (GISTC) for Tender Enquiries for Indian & Foreign Vendor. All the bidders/vendors must ensure compliance of these GISTC. GISTC can also be referred by login to B2B Portal for BHEL approved Vendors.

IN CASE YOU ARE NOT MAKING AN OFFER AGAINST THIS ENQUIRY, THEN PLEASE ARRANGE TO SEND A LETTER OF REGRET.

DETAILS OF COMPOSITION OF PART-I (TECHNO-COMMERCIAL BID), PART-II (PRICE BID) & PART-III (VENDOR REGISTRATION FORM)

PART-I (TECHNO-COMMERCIAL BID) shall comprise of following documents:

a. Confirmation to Minimum Qualification Requirement and Quality Requirement as per Annexure-II.
b. Complete technical offer as per specification, drawings, technical requirement along with un-priced bid.
c. Delivery schedule.
d. Inspection charges by BHEL nominated agency separately for foreign vendors.
e. Validity of offer to be indicated.
f. **Annexure- I** - Compliance sheet for technical/commercial terms and conditions for two part tender.
g. Deviation with reference to specification/drawing, if any, should be clearly indicated on a separate sheet.
h. Details of activity outsourced, if any.
i. Copy of Quality Plan –QP/QA/170058 Rev 00 at Annexure- VI.

PART –II (Price Bid)

a. Price bid with prices to be submitted as part-II of the tender.
b. Prices should remain firm till the execution of the order.
c. **In case of foreign vendors, Please quote your rates with C&F Landing Port.**
d. **In case of Indigenous vendor, prices may be quoted on FOR- Destination- Store-HEEP-BHEL basis.**
e. Inspection charges to be quoted separately in case of foreign vendors.
f. **Prices are to be written in both Figures & Words. In case of any difference between the two, the figure written in words shall be considered for evaluation. No over writing in this is acceptable.**

Part-III - Vendor Registration Form (SRF)
(SRF-Foreign Suppliers or SRF-Indian Suppliers)

a. **Supplier/Vendor Registration Form-** Go through online supplier registration portal https://supplier.bhel.in/ after filling the online registration form send the copy of same along with your offer within due date.

b. The SRF (as applicable) duly filled up will be assessed for manufacturing capability quality systems being followed, organizational soundness and financial worthiness. The same shall be submitted with Part-I (Techno-Commercial Bid) by un-registered vendor only with BHEL, HEEP, Haridwar.

MARKING OF ENVELOPE:

- Each envelop is to be super scribed as "TENDER FOR **"LP INNER CASING-FAB"** AGAINST TENDER NO. X**/6620/2017/0478/C** DUE ON **24.01.2017.**
- Drafts for EMD to be kept in one envelop – Envelop –A. On the Top of the envelope, please write Draft No., Issuing Bank Details & Amount. Those vendors who are quoting for more than one tender must submit a statement in the envelopes of all those tenders giving details of all the tenders being quoted. However, the draft of each tender should be kept in individual tender envelop.
- **Techno-Commercial** - Part-I to be kept in another envelop – Envelop-B & to be marked as Techno-Commercial Offer.
- Copy of Supplier Registration Form - Part –III to be kept in another envelop – Envelop – C & to be marked as Supplier Registration Form.
- Price Bid – Part-II to be kept in another envelop – Envelop-D & to be marked as Price Bid.
- Envelop-A, Envelop-B, Envelop-C & Envelop-D are to be kept in one envelop super scribed as above.

ANNEXURE-I

COMPLIANCE SHEET FOR TECHNICAL/COMMERCIAL TERMS AND CONDITIONS FOR TWO PART TENDER

PLEASE FILL THIS ANNEXURE & ATTACH WITH YOUR TECHNO-COMMERCIAL BID.

Offer must be sent in two separate sealed envelopes containing techno-commercial offer in one envelope marked "TECHNO-COMMERCIAL BID" and prices in second envelope marked "PRICE-BID". Both the envelopes must be contained in the main envelope. Tender name and due date to be marked on all the envelopes.

You are requested to kindly confirm /clarify the following:-

S. No.	Description	Vendor's Confirmation
1	Vendor to confirm that they meet each & every clause of our specifications/Drawings.	YES / NO
2	If "No" to serial number 1, vendor to specify each deviated clause & submit in a separate sheet.	
3	Vendor to list out on a separate sheet any activity which is outsourced. Please furnish details of out sourced vendor.	
4	Validity: confirm that validity of the offer shall be 90 days from the date of tender opening	YES / NO
5	Confirm that un-priced part of price bid is enclosed with technical commercial offer	YES / NO
6	Confirm delivery quoted as per enquiry	YES / NO
7	**For foreign Vendors-** Confirm that you have quoted your rates with C&F Landing Port with third party inspection charges separately. **For Indigenous Vendors-** Confirm that you have quoted your rates on FOR Destination basis.	YES / NO
8	Confirm that Loading Port has been mentioned.	YES / NO
9	Confirm that prices shall be firm and fixed throughout delivery period.	YES / NO
10	Confirm that payment term shall be "90% against receipt & acceptance of material with SRIV and 10% after final accountal of material (i.e. after FTS)"	YES / NO
11	LD Penalty shall be applicable on total order value @0.5% per week or part thereof subject to maximum of 10% of the PO Value.	YES / NO
12	Confirm that all test certificates to be submitted as per BHEL specification. in TRIPLICATE along with despatch documents	YES / NO
13	Right of acceptance – BHEL reserves the right to reject any or all quotations without assigning any reasons thereof. BHEL also reserves the right to increase or decrease the tendered quantities. Vendors should be prepared to accept order for reduced quantities without any extra charges. Vendor should also be prepared for giving discount in case of increase in quantity.	YES / NO
14	Confirm specifically that material shall be supplied as per tender documents.	YES / NO
15	Ink signed order acceptance shall be furnished within 15 days of order placement.	YES / NO
16	Confirm if there is Indian agency commission.	YES / NO
17	Please confirm to participate in Reverse Auction.	YES / NO
18	Confirm acceptance of Risk Purchase clause.	YES / NO
19	Confirm to furnish Guarantee Certificate along with the supply.	YES / NO
20	Confirm to send original ink signed copy of offer, if offer has been sent through email or FAX or photocopy has been submitted.	YES / NO

ANNEXURE-II

Minimum Qualification Requirement for LP INNER CASING FABRICATION

Following is the mandatory requirement. Offer of Vendors not meeting these requirements will not be considered.

- **Technical Requirements-**

Sl. No.	Technical Requirement				Vendor's confirmation (Y/N)
A	The vendor should have **experience of manufacturing same / similar size fabricated assemblies. P.O./ W.O. reference of customers to whom same / similar size of assemblies have been supplied** in the **past five years** to be submitted by the vendor along with the offer mentioning **contact details of the customer**. Vendor should also submit **relevant photographs in support of the same**. The following information should be submitted by the vendor-				
	1. Availability of EOT crane capacity 35 Tons having hook height 7.0 Meters (min) for turning of the assembly.				
	2. Availability of bed plate size 5.0X6.0 Meters / level accuracy within 3.0mm (max)				
	3. Availability of bending / rolling machine for 30mm plate thickness with 3.0 Meters width feasibility.				
	4. Availability of Welding process and welder qualifications (WPS/PQR & WPQ) duly witnessed by independent reputed third party preferably M/s Llyods / TUV.				
	5. Availability of NDT (DPT / UT/ RT) facilities in house / outsource with the qualified person.				
B	BHEL reserve the right to verify information submitted by the vendor. In case the information to be found false / incorrect, the offer shall be rejected.				
C	Technical evaluation of only those offers will be done who qualify as per the above qualifying conditions. Other offers shall not be considered.				
04	Name of Vendors		Contact Person details		
Note- *This is applicable for both registered as well as un-registered vendors.*					

- **Quality Requirements-**

Sl. No.	Quality Requirement	Vendor's confirmation (Y/N)
01	**a)** All vendors to confirm, endorse & return back QP No "QP/QA/170058, Rev 00". **b)** Inspection by BHEL/BHEL nominated inspection agency as per drawing/Standard and quality plan requirements.	
Note- *This is applicable for both registered as well as un-registered vendors.*		

Signature with stamp
Name:
Name of Firm:
Designation:
Date:

ANNEXURE-IIIA

General Instructions and Standard Terms & Conditions (GISTC)
For Indian Bidders

https://www.bhelhwr.co.in/bhelweb/uploads/GISTC_IND_TE.pdf

TABLE OF CONTENT

1. GENERAL
2. ORIGIN OF QUOTATION.
3. SUBMISSION OF TENDER.
4. TENDER OPENING.
5. SPECIFICATION, DRAWINGS & STANDARD.
6. PRICE SCHEDULE.
7. REVERSE AUCTION.
8. DELIVERY TERMS.
9. PENALTY FOR LATE DELIVERY.
10. PAYMENT TERMS.
11. TAXES & DUTIES.
12. BANK GUARANTEE.
13. GUARANTEE / WARRANTY AND CORRESPONDING REPAIRS / REPLACEMENT OF GOODS.
14. QUALITY REQUIREMENT.
15. VALIDITY.
16. RIGHT OF ACCEPTANCE.
17. TRANSIT INSURANCE.
18. RISK PURCHASE.
19. FORCE MAJEURE CLAUSE.
20. NON-DISCLOSURE AGREEMENT.
21. SETTLEMENT OF DISPUTES / ARBITRATION.
22. WHARFAGE / DEMURRAGE RESPONSIBILITY.
23. CONDITIONS FOR AVAILING MICRO & SMALL ENTERPRISES (MSE'S) BENEFITS.
24. INFORMATION TO THE BIDDERS.
25. NOTE.

1. GENERAL.

These general terms & conditions shall apply to all the Tender Enquiries, notice inviting tenders, request for quotations concerning the supply of goods and / or rendering of services to Bharat Heavy Electricals Ltd., HEEP, Haridwar (hereinafter referred to as BHEL or the Purchaser).

2. ORIGIN OF QUOTATION.

a) The quotation should preferably be from the principal bidder. However tender specific authorized registered dealer / agent can also submit the bid on their behalf, failing which the quotation is liable to be ignored. BHEL prefers to deal directly with the principal manufacturers.

b) An agent cannot quote on behalf of more than one principal in the same Tender Enquiry.

3. SUBMISSION OF TENDER.

a) Bid / Quotation must be enclosed in sealed cover on which tender enquiry number and the due date MUST BE written and be invariably sent under REGISTERED POST / SPEED POST / COURIER / Dropped in the Tender Box: addressed as follows:-

Quotation Against Enquiry No._____
Dated:_____

Due on:_____

To,

THE HEAD OF MATERIALS MANAGEMENT,
Heavy Electrical Equipment Plant,
Bharat Heavy Electricals Limited,
HARIDWAR-249403 (Uttarakhand), INDIA.

b) In case of Three / Two Part Bid, technical bid containing technical offer, duly signed and un-priced copy of the Price Bid should be kept in one envelope. Price Bid containing only the price should be kept in a separate envelope. All envelopes indicating Part-1 or Part-2 or Part-3 as the case may be to be put in a bigger envelope. Please note that un-priced bid should be the exact replica of price bid but without prices.

c) The bid / quotation must be posted before due date, keeping allowance for postal transit time. Alternatively, the tenders duly sealed and super-scribed as above may be deposited in the Tender Box. Quotations sent by any mode but not received in time will be ignored. Tender received through authorized E-mail is also acceptable. However, in time submission of tender in tender box shall be the responsibility of the bidder, sent through any mode. Documents submitted with the offer / bid shall be signed and stamped in each page by authorized representative of the bidder.

d) Any additional documents submitted by supplier / bidder, during processing of registration application / tender or after placement of order shall not be accepted unless it is

submitted with forwarding letter and duly signed and stamped as mentioned above in clause c.

e) The bids of the bidders who are on the banned list and also the bids of the bidders, who engage the services of the banned firms, shall be rejected. The cutting / overwriting in the bid / offer must be duly attested by the signatories to the bid. The list of firms banned by BHEL is available on BHEL web site www.bhel.com.

f) Being PMD vendor, if you are not quoting against this tender enquiry, please send your regret letter positively for our reference with valid reasons for not participating in the tender enquiry. Repeated lack of response on the part of bidder may lead to deletion such PMD vendor from BHEL's approved vendor list.

g) The bidders will submit Integrity Pact, duly signed by its authorized signatory, along with their bids wherever estimated tender value is Rs. 5 Crore or more.

h) In case of open tender, the unregistered bidder shall submit inter alia duly filled-in Supplier Registration Form (SRF) along with the bid. Bidders can download the SRF from www.bhel.com

i) BHEL reserves the right to award tendered quantities among more than one bidder (after acceptance of L1 price by the other bidders). BHEL can also consider awarding of part of the tendered quantity to other than L-1 bidder at L1 counter offered rates, if the quantity offered by the L-1 bidder is less than the quantity tendered for.

4. TENDER OPENING.

Tender opening is scheduled to start in the Tender Room at 2:00 PM, on the due date. Therefore bid / quotations must reach this office / tender Box latest by 1:45 PM on due date. Only participating bidders are allowed to attend tender opening. **TENDERS RECEIVED AFTER THE SPECIFIED TIME OF THEIR 'SUBMISSION' WILL BE TREATED AS LATE TENDERS AND SHALL NOT BE CONSIDERED UNDER ANY CIRCUMSTANCES.** The bidders or their authorized representatives may be allowed to attend tender opening if duly authorized by their principals, through a tender specific letter, for price bid opening on that particular day. General authorization letter is not acceptable.

5. SPECIFICATION, DRAWINGS & STANDARD.

a) Bidders must give their detailed specification in the quotation along with relevant technical literature / catalogue etc. against the tender enquiry.

b) The Bid should be accompanied with relevant copies of catalogues, drawings or specification as per tender enquiry. If these documents are not furnished, the offer is liable to be rejected.

c) Wherever national / international (N/IN) standards are referred, the latest N/IN standards are to be followed. Mention year & date of standard revision that shall be followed for the supply.

d) All Drawings and Standards are proprietary of BHEL. It must not be used in anyway detrimental to the interest of the company.

6. **PRICE SCHEDULE.**

a) Kindly quote your prices in figures and words both. In case of any discrepancy in value, the prices quoted in words shall be considered for evaluation and establishing L1 status.

b) Prices quoted should not be more than the prices quoted to any other BHEL units / offices / divisions. Vendor to submit copy of latest Purchase Order placed by any unit of BHEL for similar items in the technical bid. In case no order has been placed on such items, specific confirmation that no order has been placed on such items should be provided.

c) Prices should be quoted on F.O.R. Destination basis. Transit insurance shall be arranged by BHEL and not to be included in the prices. The offers quoted on other than F.O.R destination basis may result in non consideration of such bids.

d) In case BHEL accepts the EX-Works prices, such offers will be loaded by 1.5% of EX-Works value towards freight or with actual freight charges as per BHEL freight rate contract whichever is higher.

e) In case of Indigenous items covered by DGS & D Rate Contract, the bidders should submit latest valid copy of the rate contract along with bid / quotation

f) Applicable **IGST / CGST / SGST** and any other statutory levy should be indicated separately and clearly in the bid / quotation.

g) Bidders can dispatch goods through any Indian Bank Association approved transporters having their branch at HARIDWAR / destination. If material is dispatched through other than Indian Bank Association approved transporter, material to be delivered on door delivery BHEL Stores basis.

h) In case of dispatch of material through any other unapproved transporter, payment shall be made only after receipt of material and any additional charges payable to the transporter shall be to the bidder's account.

i) No demurrage / godown rent will be payable to the vendor / vendor's transporter for any delay in payments attributable to the vendor.

NB: Financial evaluation of L1, L2 ….. Status will be on the basis of Landed Cost to BHEL.

7. REVERSE AUCTION.

a) BHEL reserves the right to go for Reverse Auction (RA) instead of opening the sealed envelope price bid, submitted by the bidder. This will be decided after Techno-Commercial Evaluation. All bidders to give their acceptance for participation in RA. Non-acceptance to participate in RA may result in non-consideration of their bids, in case BHEL decides for RA. Detailed guidelines available at our site www.bhel.com

b) In case BHEL decides to go for Reverse Auction, only those bidders who have given their acceptance to participate in RA will be allowed to participate in the Reverse Auction. Those bidders who have given their acceptance to participate in Reverse Auction will have to necessarily submit 'online sealed bid' in the Reverse Auction. Non-Submission of 'online sealed bid' by the bidder will be considered as tampering of the tender process and will invite action by BHEL as per extant guidelines in vogue.

8. DELIVERY TERMS.

a) Goods shall be delivered on 'FOR Destination' basis to the named destination unless otherwise called for in the tender enquiry.

b) Loading on account of 3rd party inspection charges in case of Indian bidders shall be 0.20%.

9. PENALTY FOR LATE DELIVERY.

a) Date of delivery will be considered as per the delivery terms mentioned in the Purchase Order. Penalty will be applicable on total order value @0.5% per week or part thereof subject to maximum of 10% of the PO value unless otherwise specified in Special Conditions of tender enquiry. Acceptance / Non Acceptance of this condition must be specifically mentioned in your quotation. Any deviation from this will be loaded accordingly i.e. BHEL shall load maximum penalty under penalty for late delivery Clause, to the extent the same is not agreed by the bidder, for the purpose of evaluation.

b) Bidders are requested to quote the best delivery meeting the delivery requirements. BHEL reserves the right to reject the offers not meeting BHEL's delivery requirement.

c) Commencement of delivery period shall be reckoned from the date of PO / LOI or any other agreed milestone.

d) Bidder shall deliver the goods in the manner and schedule agreed under the terms and conditions of Purchase order.

e) **DELIVERY IN CASE OF REJECTION:** In case the material is rejected, then date of replacement will be considered as the actual date of delivery.

f) **DELIVERY AGAINST BANK DOCUMENTS:** In case payment terms quoted by bidder are documents through bank, and

the delivery terms being "FOR Haridwar / FOR Transporter Go-down" then date of delivery will be date of intimation by transporter / bidder of delivery of material at Haridwar for the penalty purpose.

g) Where the payments are through bank, the documents may be presented for negotiation to BHEL authorized / nominated bank.

10. PAYMENT TERMS.

a) BHEL's standard payment term is Payment after receipt and acceptance of materials / items at HEEP, BHEL-Store or at desired destination unless otherwise specified in Special Terms attached to the tender enquiry.

b) BHEL reserves the right to accept or reject the offer of the bidder who quotes the payment term other than BHEL's standard payment term.

c) Loading on account of deviation in payment terms shall be done as per extant rules of BHEL-Haridwar.

11. TAXES & DUTIES.

a) The bidder to specify in their offer (part 1 bid) the category of their registration under GST like Registered, Unregistered and composite dealer.

b) The provisional GST registration number of Bharat Heavy Electrical Ltd, Heavy Electricals Equipment Plant, Ranipur, Haridwar is "05AAACB4146P1ZL" with state Code as "05" and State Name as "Uttarakhand".

c) Please quote our provisional GST registration number in all invoices raised for supply of goods and services under GST regime and also ensure filing of timely return and payment of tax and compliance of other applicable provisions on supplier under GST regime.

d) No GST will be reimbursed to unregistered or composite dealer. In the event, any GST is quoted by composite dealer, the same shall be added to the cost of supply in evaluating the bid.

e) Since, input credit of GST will be available to BHEL-Haridwar only after correct filing of return and payment of applicable GST by supplier, reimbursement of GST shall be made by BHEL-Haridwar on matching of vendor inputs at GST portal, ensuring availability of input credit to BHEL Haridwar. Payment of GST will be made to vendor after matching of input credit and vendor to ensure submission of their invoices along with consent to accept payment of tax after such matching in all cases where bills are submitted directly to BHEL-Haridwar or through bank or under LC or through any other mode.

f) In the event of any disallowance of input credit or applicability of interest or any other financial liability arises on BHEL-Haridwar due to any default of supplier under GST, such implication shall be to supplier's account.

g) In the event of any change in the status of the vendor after the submission of the bid but before the supply, GST applicable at the time of supply or in the bid, based on the registration status of the vendor, whichever is lower shall be payable.

h) Where ever applicable If PAN (Permanent Account Number) of the recipient is not available, income tax is deductible either at the normal rate or at the rate of 20 percent, whichever is higher as per Section 206AA of Indian Income Tax Act 1961.

i) The bidder shall clearly indicate HSN (*Harmonised System Nomenclature)* / SAC (*Service Accounting Code*), its description and applicable rate of GST for each item in his techno-commercial bid.

j) Statutory Variation in Taxes & duties as applicable at the time of supply shall be payable. However, in the event of no change in law but bidder quoting certain tax structure in bid document which is lower than the applicable one, such amount shall be the maximum amount of tax that can be claimed by bidder.

k) IMPORTED GOODS OFFERED BY INDIAN BIDDERS AGAINST DEALER INVOICE: Wherever the material being offered is imported, the bidder must quote the prices inclusive of IGST. The rate and value of IGST as included in

the price must be indicated separately. In case quantum of IGST is not mentioned by the bidder the same will not be considered for evaluation. However, bidder will have to pass on the benefit of IGST to BHEL at the time supply.

I) In case of directly dispatchable items to Customer's Site, BHEL-Haridwar will inform the GST registration number of the respective customer which must be mentioned on the vendor's invoice. Vendor to ensure availability of such information from BHEL-Haridwar before dispatch of any material. However while filing GSTN-1, BHEL Haridwar GSTN number to be quoted.

Note: - Vendors must ensure compliance of all the applicable rules and procedure as envisaged in the GST Regime. Any loss to BHEL-Haridwar due to fault / non-compliance by the vendor will be to the vendor's account.

12. **BANK GUARANTEE.**

In case the bank guarantees are required to be deposited towards security deposit/performance guarantee or for any other purpose as per the terms of this tender enquiry, such bank guarantees of the requisite value in the denominated currency of the purchase order should be from one of the Indian branch of BHEL consortium banks and the bank guarantee should be in the proforma as prescribed by BHEL. The proforma of bank guarantee and the list of consortium banks are displayed at BHEL website www.bhelhwr.co.in. However, in case the bank guarantee is not from BHEL consortium banks, then the bidder has to get the bank guarantee confirmed from one of the Indian branch of BHEL consortium banks and the bank charges for such confirmation will be borne by the bidder.

13. GUARANTEE / WARRANTY AND CORRESPONDING REPAIRS / REPLACEMENT OF GOODS.

Goods shall comply with the specifications for material, workmanship and performance. Unless otherwise specified, the warranty shall be for a period of 18 months from the date of receipt. If the delivery is found non-compliant during the warranty period, leading to rejection, the Seller shall arrange free replacement / repair of goods, within one month from the date of intimation or any mutually agreed period. The rejected goods shall be taken away by the Seller at his cost and replaced on Delivered Duty Paid (DDP) (FOR - BHEL Stores / designated destination basis) within such period. In the event of the Seller's failure to comply, Purchaser may take action as appropriate, including Repair / Replenish rejected goods & disposal of rejections, at the risk & cost of the Seller. In case the defects attributable to Seller are detected during processing of the goods at BHEL or at our subcontractor's works, the Seller shall be responsible for free replacement / repair of the goods as required by BHEL.

b) **RETURN OF REJECTED MATERIAL FOR REPLACEMENT:** The bidder shall have to pay 5% incidental charges while taking back supplied material if it is found rejected on receipt. The rejected material shall be sent back only after receipt of replacement /submission of BG/refund of amount paid.

14. **QUALITY REQUIREMENT.**

Your bid/quotation should have specific confirmation regarding meeting all our quality requirements such as. (i) Test Certificate (TC), (ii) Guarantee Certificate (GC) / Warranty Certificate (WC), (iii) Quality Plan (QP) (if applicable); and (iv) Pre-Dispatch Inspection at your works (if applicable).

15. VALIDITY

The quotation should be valid for a minimum period of 90 days effective from the date of opening of tender, unless otherwise specified in the tender enquiry.

16. RIGHT OF ACCEPTANCE.

a) **BHARAT HEAVY ELECTRICALS LIMITED HARIDWAR** reserves the right to reject any or all the bids / quotations without assigning any reason thereof. BHEL also reserves the right to increase or decrease the tendered quantities. Bidders should be prepared to accept order for reduced quantity without any extra charges.

b) Any discount / revised offer / bids submitted by a bidder on its own shall be considered, provided it is received on or before the due date and time of offer / bid submission (Part-1). Conditional discounts shall not be considered for evaluation of tenders.

c) Unsolicited discounts / revised offers / bids given after Part-1 bid opening shall not be accepted. No change in price will be permitted within the validity period asked for in the tender enquiry.

d) In case of changes in scope and / or technical specification and / or commercial terms & conditions having price implication, techno-commercially acceptable bidders shall be asked by BHEL to submit the impact of such changes on their price bids. In case a bidder opts to submit revised price bid instead of impact called for then the latest price bid shall prevail. However in both situations, original price bid will be necessarily opened.

e) The bidder whose bid is technically not accepted will be informed & EMD wherever submitted shall be returned after finalization of contract. EMD shall be forfeited in the event of bidder opting out after tender opening.

f) BHEL reserves the right to short close the existing Purchase Order / Rate Contract / Work Order or any extension thereof at any stage.

17. TRANSIT INSURANCE.

a) Transit Insurance will be covered by BHEL under its open Insurance Policy. Seller shall inform dispatch particulars (Purchase Order, RR/GR/, Invoice value etc.) to "Finance department (Store bill Section), BHEL Ranipur Haridwar (Uttarakhand -India) with value of consignment to the Purchaser within 07 days of dispatch for BHEL to arrange insurance coverage in its policy. Failure on the part of seller to inform dispatch particulars will make him liable to pay for any transit damages / losses suffered by the Purchaser.

b) If Quoted Prices are inclusive of transit insurance, no weightage shall be given while evaluating the bids for Cost of Insurance, being in BHEL Scope.

18. RISK PURCHASE.

In case of abnormal delays (beyond the maximum late delivery period as per Penalty clause) in supplies / defective supplies or non-fulfillment of any other terms and conditions given in Purchase Order, BHEL may cancel the Purchase Order in full or part thereof, and may also make the purchase of such material from elsewhere / alternative source at the risk and cost of the supplier. BHEL will take all reasonable steps to get the material from alternate source at optimum cost. If bidder does not agree to the above Risk Purchase Clause, BHEL reserves the right to reject the offer. In case for compelling reasons BHEL accepts the offer without acceptance of this clause by the bidder and in the eventuality of Risk Purchase, appropriate action will be taken as per BHEL extant rules. This will be without prejudice to any other right of BHEL under the contract.

19. FORCE MAJEURE CLAUSE.

Notwithstanding any other thing contained anywhere else in the contract or PO (Purchase Order), In case the discharge of obligation under the contract by either party is impeded or made unreasonably onerous, neither party shall be considered in breach of the contract to the extent that performance of their respective obligation is prevented by an event of Force Majeure that arises after the effective date (PO date).

In the above clause, Force Majeure means an event beyond the control of the parties to the contract which prevents a party from complying with any obligation of the contract including but not limited to:

a) Act of God (Such as but not limited to earthquake, drought, tidal waves, floods etc.).
b) War (whether war be declared or not), Hostilities Invasion, Act of foreign enemy etc.
c) Rebellion, revolution, insurrection, civil war etc.
d) Contamination of Radio Activity from any nuclear fuel or from any other nuclear waste or any other hazardous materials.
e) Riots, commotions, strike unless restricted to the employees of supplier.
f) Acts of terrorism.
g) Other unforeseeable circumstances beyond the control of the parties and which the affected party cannot avoid even by using its best efforts.
h) Cancellation of contract by customer.
i) Change in law/ government. Regulation making the performance impossible.

The party claiming to be affected by force majeure shall notify the other party in writing immediately without delay on the intervention and on the cessation of such circumstances.

Irrespective of any extension of time, if an event of force majeure occurs and its effect continues for more than 180 days the affected party shall have right to cancel the contract.

As soon as reasonably practicable following the date of commencement of a Force Majeure Event, and within a reasonable time following the date of termination of a Force Majeure Event, either Party invoking it shall submit to the other Party reasonable proof of the nature of the Force Majeure Event and of its effect upon the performance of the Party's obligations under this Agreement.

The party shall, and shall ensure that its Subcontractors shall, at all times take all reasonable steps within their respective powers and consistent with Good Operating Practices (but without incurring unreasonable additional costs) to:

a) Prevent Force Majeure Events affecting the performance of the party's obligations under this Agreement.
b) mitigate the effect of any Force Majeure Event and
c) Comply with its obligations under this Agreement.

If the war like situation has developed in a country where a seller's works is located in this P.O. or there is political instability and Indian Embassy located in that country forbids or advises for not having any business dealing with the sellers located in such zone / region/ country then BHEL reserves the right to cancel the order.

20. NON-DISCLOSURE AGREEMENT.

All Drawing and Technical Documents relating to the product or it's manufacture submitted by one party to the other, prior or subsequent to the formation of contract, shall remain property of the submitting party. Drawing, technical documents or other technical information received by one party, shall not without the consent of the other party, be used for any other purpose than that, for which they were provided. Such technical information shall not without the consent of the submitting party, otherwise be used or copied, reproduced, transmitted or communicated to a third party. Patterns supplied by BHEL will remain BHEL's property which shall be returned by the bidder on demand to BHEL. Bidder shall in no way share or use such intellectual property of BHEL to promote his own business with others. BHEL reserves the right to claim damages from the bidder, or take appropriate penal action as deemed fit against the bidder, for any infringement of the provisions contained herein.

21. SETTLEMENT OF DISPUTES / ARBITRATION.

In all cases of dispute the mater shall be referred for ARBITRATION by sole arbitrator to be appointed by the Unit Head of Bharat Heavy Electricals Ltd., at HARIDWAR. The award of the Arbitrator shall be final and binding on both the parties. The place of Arbitration shall be Haridwar.

JURIDICTION: The courts of Haridwar, India, shall have exclusive jurisdiction.

22. WHARFAGE / DEMURRAGE RESPONSIBILITY.

In the event of delay in receipt of documents by Manager (Stores-Shipping) BHEL-Haridwar and in case where dispatches are made through Unapproved Transporter the sole responsibility for wharfage /demurrage for such delay shall be that of supplier.

23. CONDITIONS FOR AVAILING MICRO & SMALL ENTERPRISES (MSE'S) BENEFITS.

a) "MSE Suppliers can avail the intended benefits only if they submit along with the offer, attested copies of either EM II certificate having deemed validity (**five years** from the date of issue of acknowledgement in EM II) or valid NSIC certificate or EM II certificate along with attested copy of a CA certificate (Format enclosed at annexure-1 where deemed validity of EM II certificate of five years has expired) applicable for the relevant financial year (latest audited). Date to be reckoned for determining the deemed validity will be the date of bid opening (Part 1 in case of two part bid). Non submission of such documents will lead to consideration of their bid at par with other bidders. No benefit shall be applicable for this enquiry if any deficiency in the above required documents is found or the requisite documents are not submitted before price bid opening. If the tender is to be submitted through e-procurement portal, then the above require document are to be

uploaded on the portal. Documents should be notarized or attested by a Gazetted officer."

b) Any new supplier will be eligible for registration with BHEL as MSE supplier provided at least any one of the following documents are submitted along with application for registration :-

1) Valid NSIC Certificate or

2) Udyog Aadhaar Memorandum or

3) Entrepreneurs Memorandum part II (EM II) certificate (valid based on deemed validity of 5 years) or

4) EM II certificate along with attested copy of CA Certificate (as per prescribed format at annexure-A) applicable for the relevant financial year (latest audited), where the deemed validity of EM II is over.

5) Any Start-Up Organization will be eligible to avail all the benefits as provided by Govt. guidelines after submitting the required documents.

However, credentials of all MSE suppliers will be verified before advancing the intended benefits.

c) MSE bidders claiming SC/ST status will have to submit SC/ST certificate of the Proprietor from competent authority. Attested (notarized or attested by Gazetted officer) copy to be submitted along with the offer.

d) In case techno-commercial accepted bidders include MSE source and their prices (based on landed cost – considering quoted prices) are within the price band of 15% w.r.t. L-1 bidder, then BHEL can offer 20% of quantity of respective item (rounded off to nearest number) to MSE bidders at L-1 price and in case, more than one MSE bidder is in 15 % band and the same is accepted by more than one MSE bidders then 20% quantities of respective items will be considered for ordering on proportionate basis amongst MSE bidders.

e) While distributing the 20% quantity amongst MSE bidders the decimal points in quantity shall be ignored for all the bidders except the L-1 amongst MSE bidders. Balance quantity after allocating the quantity to other MSE bidders ignoring the quantities in decimal, shall be given to L-1 (amongst MSE) bidder. However if there are more than one MSE bidder at the same price level than preference for additional quantities due to ignoring off the decimal (as mentioned above) shall be given to the bidder offering favorable terms to BHEL and if the conditions offered are also same then preference will be given to the bidder having high SPR rating.

f) In case there are more than one MSE bidders (with different landed cost to BHEL) within 15% price band of lowest bidder and quantity to be offered is 1 no. only, then preference shall be given to the MSE bidder with lowest landed cost .

k) In case there are more than one MSE bidders (with same landed cost to BHEL) within 15% price band of lowest bidder and quantity to be offered is 1 no. only, then preference shall be given first, based on the favorable terms in the bid and in case terms are also same, the bidder with high SPR rating shall be given preference.

l) If L1 bidder is MSE bidder, entire quantity will be given to such MSE bidder only.

m) Note: It may however be noted that MSE guidelines as on date (Date of Technical Bid Opening Part-1) shall prevail

24. INFORMATION TO THE BIDDERS.

a) Purchase related information is available at our Business-to-Business (B2B) Portal available on our website www.bhelhwr.co.in The user ID & password can be obtained by sending a request to concerned purchase executives.

b) Intimate your change in mail address or communication address or changes, if any, by email to ppx_idx@bhelhwr.co.in giving your bidder Code.

c) Please resolve your rejections and unexecuted overdue purchase order immediately which are posted at our B2B Portal, which can be visited through our site www.bhelhwr.co.in

d) Copy of this Tender Enquiry is being sent through the post.

25. NOTE.

a) Special conditions of enquiry, if enclosed by BHEL, will supersede the respective standard/general terms of enquiry.

b) Any other Standard terms and Conditions of the bidder attached/referred against the tender enquiry will be treated as null and void ab initio.

c) In order to protect the commercial interests of BHEL, it becomes necessary to take action against suppliers / contractors by way of suspension of business dealings, who either fail to perform or are in default without any reasonable cause, cause loss of business / money / reputation, indulged in malpractices, cheating, bribery, fraud or any other misconducts or formation of cartel so as to influence the biding process or influence the price etc. Guide- lines for Suspension of Business Dealings with Suppliers / Contractors shall prevail over which is available at BHEL website http://www.bhel.com

d) The bidder along with its associate / collaborators / sub-contractors / sub-vendors / consultants / service providers shall strictly adhere to BHEL Fraud Prevention Policy displayed on BHEL website http://www.bhel.com and shall immediately bring to the notice of BHEL-Management about any fraud or suspected fraud as soon as it comes to their notice.

ANNEXURE-IIIB

General Instructions and Standard Terms & Conditions (GISTC)
For Foreign Bidders

https://www.bhelhwr.co.in/bhelweb/uploads/GISTC_IMP_TE.pdf

TABLE OF CONTENT

1. GENERAL
2. ORIGIN OF QUOTATION.
3. SUBMISSION OF TENDER.
4. TENDER OPENING.
5. SPECIFICATION, DRAWINGS & STANDARD.
6. PRICE SCHEDULE.
7. REVERSE AUCTION.
8. DELIVERY TERMS.
9. PENALTY FOR LATE DELIVERY.
10. PAYMENT TERMS.
11. BANK GUARANTEE.
12. GUARANTEE / WARRANTY AND CORRESPONDING REPAIRS / REPLACEMENT OF GOODS.
13. QUALITY REQUIREMENT.
14. VALIDITY.
15. RIGHT OF ACCEPTANCE.
16. TRANSIT INSURANCE.
17. PHYTOSANITARY CERTIFICATE
18. RISK PURCHASE.
19. FORCE MAJEURE CLAUSE.
20. NON-DISCLOSURE AGREEMENT.
21. SETTLEMENT OF DISPUTES / ARBITRATION.
22. INFORMATION TO THE BIDDERS.
23. NOTE.

1. GENERAL.

These general terms & conditions shall apply to all the Tender Enquiries, notice inviting tenders, request for quotations concerning the supply of goods and / or rendering of services to Bharat Heavy Electricals Ltd., HEEP, Haridwar (hereinafter referred to as BHEL or the Purchaser).

2. ORIGIN OF QUOTATION.

a) The quotation should preferably be from the principal bidder. However tender specific authorized registered dealer / agent can also submit the bid on their behalf, failing which the quotation is liable to be ignored. BHEL prefers to deal directly with the principal manufacturers.

b) An agent cannot quote on behalf of more than one principal in the same Tender Enquiry.

3. SUBMISSION OF TENDER.

a) Bid / Quotation must be enclosed in sealed cover on which tender enquiry number and the due date MUST BE written and be invariably sent under REGISTERED POST / SPEED POST / COURIER / Dropped in the Tender Box: addressed as follows:-

Quotation Against Enquiry No._____
Dated:_____

Due on:_____

To,
THE HEAD OF MATERIALS MANAGEMENT,
Heavy Electrical Equipment Plant,
Bharat Heavy Electricals Limited,
HARIDWAR-249403 (Uttarakhand), INDIA.

b) In case of Three / Two Part Bid, technical bid containing technical offer, duly signed; and un-priced copy of the Price Bid should be kept in one envelope. Price Bid containing only the price should be kept in a separate envelope. All envelopes indicating Part-1 or Part-2 or Part-3 as the case may be to be put in a bigger envelope. Please note that un-priced bid should be the exact replica of price bid but without prices.

c) The bid / quotation must be posted before due date, keeping allowance for postal transit time. Alternatively, the tenders duly sealed and super-scribed as above may be deposited in the Tender Box. Quotations sent by any mode but not received

Quotations / Bids not in accordance with General Instructions and Standard Terms & Conditions are likely to be ignored.

in time will be ignored. Tender received through authorized E-mail is also acceptable. However, in time submission of tender in tender box shall be the responsibility of the bidder, sent through any mode. Documents submitted with the offer / bid shall be signed and stamped in each page by authorized representative of the bidder.

d) Any additional documents submitted by supplier / bidder, during processing of registration application / tender or after placement of order shall not be accepted unless it is submitted with forwarding letter and duly signed and stamped as mentioned above in clause c.

e) The bids of the bidders who are on the banned list and also the bids of the bidders, who engage the services of the banned firms, shall be rejected. The cutting / overwriting in the bid / offer must be duly attested by the signatories to the bid. The list of firms banned by BHEL is available on BHEL web site www.bhel.com.

f) Being PMD vendor, if you are not quoting against this tender enquiry, please send your regret letter positively for our reference with valid reasons for not participating in the tender enquiry. Repeated lack of response on the part of bidder may lead to deletion of such PMD vendor from BHEL's approved vendor list.

g) The bidders will submit Integrity Pact, duly signed by its authorized signatory, along with their bids wherever estimated tender value is Rs. 5 Crore or more.

h) In case of open tender, the unregistered bidder shall submit inter alia duly filled-in Supplier Registration Form (SRF) along with the bid. Bidders can download the SRF from www.bhel.com

i) BHEL reserves the right to award tendered quantities among more than one bidder (after acceptance of L1 price by the other bidders). BHEL can also consider awarding of part of the tendered quantity to other than L-1 bidder at L1 counter offered rates, if the quantity offered by the L-1 bidder is less than the quantity tendered for.

j) BHEL may also reduce the Tender Quantity for offering it to Micro & Small Enterprise (MSE) Indian Vendors as per applicable Government of India rules whose prices are within 15% of L1 prices as per directives of Government of India.

4. TENDER OPENING.

Tender opening is scheduled to start in the Tender Room at 2:00 PM, on the due date. Therefore bid/quotations must reach this office / tender Box latest by 1:45 PM on due date. Only participating bidders are allowed to attend tender opening. **TENDERS RECEIVED AFTER THE SPECIFIED TIME OF THEIR 'SUBMISSION' WILL BE TREATED AS LATE TENDERS AND SHALL NOT BE CONSIDERED UNDER ANY CIRCUMSTANCES.** The bidders or their authorized representatives may be allowed to attend tender opening if duly authorized by their principals, through a tender specific letter, for price bid opening on that particular day. General authorization letter is not acceptable.

5. SPECIFICATION, DRAWINGS & STANDARD.

a) Bidders must give their detailed specification in the quotation along with relevant technical literature / catalogue etc. against the tender enquiry.

b) The Bid should be accompanied with relevant copies of catalogues, drawings or specification as per tender enquiry. If these documents are not furnished, the offer is liable to be rejected.

Quotations / Bids not in accordance with General Instructions and Standard Terms & Conditions are likely to be ignored.

c) Wherever national / international (N/IN) standards are referred, the latest N/IN standards are to be followed. Mention year & date of standard revision that shall be followed for the supply.

d) All Drawings and Standards are proprietary of BHEL. It must not be used in anyway detrimental to the interest of the company.

6. PRICE SCHEDULE.

a) Kindly quote your prices in figures and words both. In case of any discrepancy in value, the prices quoted in words shall be considered for evaluation and establishing L1 status.

b) Prices quoted should not be more than the prices quoted to any other BHEL units / offices / divisions. Vendor to submit copy of latest Purchase Order placed by any unit of BHEL for similar items in the technical bid. In case no order has been placed on such items, specific confirmation that no order has been placed on such items should be provided.

c) Bidders need to quote their prices on CFR any sea port in Mumbai or FCA basis to the named airport in Euro / USD / JPY / UK Pound / SF / Singapore Dollar or any other Internationally freely tradable currency only. The name of the currency should be clearly indicated in your bids.

d) Offers received other than CFR basis may result in non-consideration of such bids.

e) However if BHEL agrees to accept the FOB condition, to arrive at landed cost at our plant / site, the FOB prices shall be loaded for 3% (of FOB Value) towards marine insurance, port handling charges & inland freight or actual freight / port handling charges as per BHEL contract whichever is higher.

f) Basis of Evaluation for Bid / Quotation in foreign currency:

I. Currency exchange rate (TT selling rates of SBI) for evaluation of the bid/quotation received in foreign currency will be as follows:
II. Single part bid – Date of tender opening.
III. Two / Three part bid – Date of part 1 opening.
IV. Reverse auction – Date of part-1 opening.

NB: Financial evaluation of L1, L2 ------- status will be on the basis of Landed Cost to BHEL.

g) Evaluation of Indian Agents Commission:

I. BHEL prefers to deal directly with foreign bidder, wherever required, for procurement of Goods. However if the Foreign Principal desires to avail services of an Indian Agent then the Principal should ensure compliance to applicable guidelines.

II. The FOB / CIF price quoted will be deemed to be inclusive of Indian Agency commission. Agency commission if payable shall be converted to Indian Rupees at TT buying rates of exchange ruling on tender opening date which shall not be subjected to any further exchange rate variation, as disclosed by the bidder in his quoted FOB / CIF price will be paid in Indian Rupees on receipt & acceptance of Materials or it's installation at destination, as the case may be. The lower of the TT buying rate prevailing on the date of technical bid opening shall be considered for computation of Agency commission.

III. In a tender either the Indian Agent on behalf of Principal / OEM or the Principal / OEM itself can bid, but both cannot bid simultaneously for same item / product in the same Tender. If both OEM and its authorized agent submit their bids

Quotations / Bids not in accordance with General Instructions and Standard Terms & Conditions are likely to be ignored.

separately in that case only the offer of OEM can be considered as an exception.

h) While submitting your bids please clearly indicate:

I. Expected weight of goods (lots wise).
II. The size of packed goods.
III. Whether the goods can be dispatched in containers?
IV. Port of Loading.
V. Port of Discharge.

7. REVERSE AUCTION.

a) BHEL reserves the right to go for Reverse Auction (RA) instead of opening the sealed envelope price bid, submitted by the bidder. This will be decided after Techno-Commercial Evaluation. All bidders to give their acceptance for participation in RA. Non-acceptance to participate in RA may result in non-consideration of their bids, in case BHEL decides for RA. Detailed guidelines available at our site www.bhel.com

b) In case BHEL decides to go for Reverse Auction, only those bidders who have given their acceptance to participate in RA will be allowed to participate in the Reverse Auction. Those bidders who have given their acceptance to participate in Reverse Auction will have to necessarily submit 'online sealed bid' in the Reverse Auction. Non-Submission of 'online sealed bid' by the bidder will be considered as tampering of the tender process and will invite action by BHEL as per extant guidelines in vogue.

8. DELIVERY TERMS.

a) Goods shall be dispatched by sea, unless stated otherwise in the tender enquiry or purchase order.

b) In the event of bidder offering CFR delivery terms for delivery in FCL (Full Container Load), the bidder shall provide 21 days' time free of detention for General Purchase Container / High Cube Container and 14 days for the other types from the date of delivery at delivery port. Wherever the detention free period offered is less than the above specified period, the consequential cost at port of clearance shall be to the account of the bidder. Number of detention free days must be mentioned on Bill of Lading (BL).

c) In case of CFR delivery, Port congestion charges or any additional charges claimed by shipping line till delivery at destination port shall be to the bidder's account.

d) Specifically confirm your agreement to change the mode by Air at BHEL's request as per mutually agreed terms even after placement of Purchase Orders.

e) The Trans-shipment is not permissible in case of Break Bulk Cargo. In rest of the case Trans-Shipment condition in BHEL purchase order / letter of credit will be as per Uniform Custom and Practice for documentary credits, UCP 600 of International Standard Bank proceed re-issued by International chamber of Commerce (ICC).

f) No demurrage / godown rent will be payable to the vendor / vendor's transporter for any delay in payments attributable to the vendor.

g) The shipping line should be ready to move the containers to consignees nominated CFS (Container Freight Station) yard and Indian agent of shipping line should issue Cargo Arrival Notice (CAN) 7 days in advance for filing the IGM (Import General Manifest) at discharge port.

Quotations / Bids not in accordance with General Instructions and Standard Terms & Conditions are likely to be ignored.

h) In case of CFR contract, bidder to supply the material through a Certified Sea worthy vessel.

i) A certificate of origin (COO) sanctioned in country of origin from chamber of commerce of the manufacturing country is mandatory to be provided. However a certificate of origin (COO) from the countries under the restricted list of Govt. of India will not be acceptable.

j) For reasons of delay in receipt of documents from suppliers or due to the same being found to be incomplete, and / or faulty, the suppliers shall be responsible to reimburse in all demurrages / wharfages, if any paid by BHEL (for stated reasons).

k) The invoices being issued by shipping lines must be in the name of BHEL. Otherwise, BHEL will have to forego Input Credit on GST.

l) While booking the shipment, bidder to also finalize **destination charges** and the same should appear over BL or agreed tariff to be provided to BHEL before arrival of shipment.

m) If cargo is stuffed in container then the same should be allowed to be moved to CFS of importers choice without any additional charges.

n) Load port charges shall be settled by the supplier and not be passed on to BHEL in form of destination charges.

o) NNDs (Non Negotiable Documents) (preferably with OBLs) should be sent at least 7 days in advance i.e. 7 days before the arrival of vessel so as to enable BHEL to move the containers to JWC CFS.

p) Information related to OBL / AWB Documents:

I. Consignee name and address should be same as mentioned in the Purchase order.

II. Notify party: Name and address will be as follows :(For discharge port Mumbai or Nhava Sheva)
Bharat Heavy Electricals Limited
14th Floor World Trade Centre-1, Cuffe Parade, Colaba, Mumbai -400005
Email: msseahwr@bhel.in & ppximx@bhelhwr.co.in (in case of Sea Shipments)
Email: msair@bhel.in and ppximx@bhelhwr.co.in (in Case of Air shipments)
For latest updating please refer our web site: www.bhelhwr.co.in

III. OBL should clearly mention the Indian agent address and contact details.

IV. OBL should be issued as per UCP 600.

V. In case of incoterms other than FOB, OBL should mention the container detention free period.

VI. In case of placement of an Order, BHEL requests bidder to supply one Original Bill of Lading / AWB directly to their Mumbai office with other non-negotiable documents to ensure timely clearance of goods. The other Original Bill of Ladings may be routed through bank based on the other agreed terms and conditions of purchase order.

9. PENALTY FOR LATE DELIVERY.

a) Date of delivery will be considered as per the delivery terms mentioned in the Purchase Order. Penalty will be applicable on total order value @0.5% per week or part thereof subject to maximum of 10% of the PO value unless otherwise specified in Special Conditions of tender enquiry. Acceptance / Non Acceptance of this CONDITION

Quotations / Bids not in accordance with General Instructions and Standard Terms & Conditions are likely to be ignored.

must be specifically mentioned in your quotation. Any deviation from this will be loaded accordingly i.e. BHEL shall load maximum penalty under penalty for late delivery Clause, to the extent the same is not agreed by the bidder, for the purpose of evaluation.

b) Bidders are requested to quote the best delivery meeting the delivery requirements. BHEL reserves the right to reject the offers not meeting BHEL's delivery requirement.

c) Commencement of delivery period shall be reckoned from the date of PO / LOI or any other agreed milestone.

d) Bidder shall deliver the goods in the manner and schedule agreed under the terms and conditions of Purchase order.

e) The delivery date for penalty purpose will be the Bill of Lading Date / Air way bill.

10. PAYMENT TERMS.

a) BHEL's standard payment term is Payment after Receipt and Acceptance of Material / Item at HEEP, BHEL-Store or at desired destination unless otherwise specified in Special Terms attached to the tender enquiry.

b) BHEL reserves the right to accept or reject the offer of the bidder who quotes the payment term other than BHEL's standard payment term.

c) Loading on account of deviation in payment terms shall be done as per extant rules of BHEL-Haridwar.

d) Where the payments are through bank, the documents may be presented for negotiation through BHEL designated banks which will be specified in Purchase order. Documents should be submitted within 5 days of vessel sailing and receipt of OBL from shipping line.

e) In case BHEL agrees for payment through LC, the same shall be irrevocable, unconfirmed and will be opened 30 days prior to the scheduled delivery and will be valid for a period of 60 days.

11. BANK GUARANTEE.

In case the bank guarantees are required to be deposited towards security deposit / performance guarantee or for any other purpose as per the terms of this tender enquiry, such bank guarantees of the requisite value in the denominated currency of the purchase order should be from one of the Indian branch of BHEL consortium banks and the bank guarantee should be in the proforma as prescribed by BHEL. The proforma of bank guarantee and the list of consortium banks are displayed at BHEL website www.bhelhwr.co.in. However, in case the bank guarantee is not from BHEL consortium banks, then the bidder has to get the bank guarantee confirmed from one of the Indian branch of BHEL consortium banks and the bank charges for such confirmation will be borne by the bidder.

12. GUARANTEE / WARRANTY AND CORRESPONDING REPAIRS / REPLACEMENT OF GOODS.

a) Goods shall comply with the specifications for material, workmanship and performance. Unless otherwise specified, the warranty shall be for a period of 18 months from the date of receipt. If the delivery is found non-compliant during the warranty period, leading to rejection, the Seller shall arrange free replacement / repair of goods, within one month from the date of intimation or any mutually agreed period. The rejected goods shall be taken away by the Seller at his cost and replaced on

Delivered Duty Paid (DDP) (FOR - BHEL Stores / designated destination basis) within such period. In the event of the Seller's failure to comply, Purchaser may take action as appropriate, including Repair / Replenish rejected goods & disposal of rejections, at the risk & cost of the Seller. In case the defects attributable to Seller are detected during processing of the goods at BHEL or at our subcontractor's works, the Seller shall be responsible for free replacement / repair of the goods as required by BHEL.

b) In case the material is rejected, then date of replacement will be considered as the actual date of delivery.

c) The bidder shall have to pay 5% incidental charges while taking back supplied material if it is found rejected on receipt. The rejected material shall be sent back only after receipt of replacement /submission of BG/refund of amount paid.

13) **QUALITY REQUIREMENT.**

Your bid / quotation should have specific confirmation regarding meeting all our quality requirements such as. (i) Test Certificate (TC), (ii) Guarantee Certificate (GC) / Warranty Certificate (WC), (iii) Quality Plan (QP) (if applicable); and (iv) Pre-Dispatch Inspection at your works (if applicable).

14. VALIDITY.

The quotation should be valid for a minimum period of 90 days effective from the date of opening of tender, unless otherwise specified in the tender enquiry.

15. RIGHT OF ACCEPTANCE.

a) **BHARAT HEAVY ELECTRICALS LIMITED HARIDWAR** reserves the right to reject any or all the bids / quotations without assigning any reason thereof. BHEL also reserves the right to increase or decrease the tendered quantities. Bidders should be prepared to accept order for reduced quantity without any extra charges.

b) Any discount / revised offer / bids submitted by a bidder on its own shall be considered, provided it is received on or before the due date and time of offer / bid submission (Part-1). Conditional discounts shall not be considered for evaluation of tenders.

c) Unsolicited discounts / revised offers / bids given after Part-1 bid opening shall not be accepted. No change in price will be permitted within the validity period asked for in the tender enquiry.

d) In case of changes in scope and / or technical specification and / or commercial terms & conditions having price implication, techno-commercially acceptable bidders shall be asked by BHEL to submit the impact of such changes on their price bids. In case a bidder opts to submit revised price bid instead of impact called for, then latest price bid shall prevail. However in both situations, original price bid will be necessarily opened.

e) The bidder whose bid is technically not accepted will be informed & EMD wherever submitted shall be returned after finalization of contract. EMD shall be forfeited in the event of bidder opting out after tender opening.

f) BHEL reserves the right to short close the existing Purchase Order / Rate Contract / Work Order or any extension thereof at any stage.

16. TRANSIT INSURANCE.

Quotations / Bids not in accordance with General Instructions and Standard Terms & Conditions are likely to be ignored.

a) Transit Insurance will be covered by BHEL under its open Marine Insurance Policy. Seller shall inform dispatch particulars (Purchase Order, RR / GR / BL / AWB, Invoice value etc.) to Finance department (Store bill Section), BHEL Ranipur Haridwar (Uttarakhand -India) with value of consignment to the Purchaser within 07 days of dispatch for BHEL to arrange insurance coverage in its policy. Failure on the part of seller to inform dispatch particulars will make him liable to pay for any transit damages / losses suffered by the Purchaser.

b) If Quoted Prices are inclusive of transit insurance, no weightage shall be given while evaluating the bids for Cost of Insurance, being in BHEL Scope.

17. PHYTOSANITARY CERTIFICATE:

a) As per the Indian Law, all consignments being imported into India by air/sea require a phytosanitary certificate from the country of origin- if articles have been packed with wooden packaging materials. This is mandatory. Please confirm in your offer/dispatch documents that the required phytosanitary certificate will be submitted.

b) Packaging material means any kind of material of plant origin used for packing which include hay, straw wood shavings, wood chips, saw dust, wood waste, wooden pallets, dunnage mats, wooden packages, coir pith, peat or sphagnum moss etc.

18. RISK PURCHASE.

In case of abnormal delays (beyond the maximum late delivery period as per Penalty clause) in supplies / defective supplies or non-fulfillment of any other terms and conditions given in Purchase Order, BHEL may cancel the Purchase Order in full or part thereof, and may also make the purchase of such material from elsewhere / alternative source at the risk and cost of the supplier. BHEL will take all reasonable steps to get the material from alternate source at optimum cost. If bidder does not agree to the above Risk Purchase Clause, BHEL reserves the right to reject the offer. In case for compelling reasons BHEL accepts the offer without acceptance of this clause by the bidder and in the eventuality of Risk Purchase, appropriate action will be taken as per BHEL extant rules. This will be without prejudice to any other right of BHEL under the contract.

19. FORCE MAJEURE CLAUSE.

Notwithstanding any other thing contained anywhere else in the contract or PO (Purchase Order), In case the discharge of obligation under the contract by either party is impeded or made unreasonably onerous, neither party shall be considered in breach of the contract to the extent that performance of their respective obligation is prevented by an event of Force Majeure that arises after the effective date (PO date).

In the above clause, Force Majeure means an event beyond the control of the parties to the contract which prevents a party from complying with any obligation of the contract including but not limited to:

a) Act of God (Such as but not limited to earthquake, drought, tidal waves, floods etc.).
b) War (whether war be declared or not), Hostilities Invasion, Act of foreign enemy etc.
c) Rebellion, revolution, insurrection, civil war etc.
d) Contamination of Radio Activity from any nuclear fuel or from any other nuclear waste or any other hazardous materials.
e) Riots, commotions, strike unless restricted to the employees of supplier.
f) Acts of terrorism.

g) Other unforeseeable circumstances beyond the control of the parties and which the affected party cannot avoid even by using its best efforts.
h) Cancellation of contract by customer.
i) Change in law / government. Regulation making the performance impossible.

The party claiming to be affected by force majeure shall notify the other party in writing immediately without delay on the intervention and on the cessation of such circumstances.

Irrespective of any extension of time, if an event of force majeure occurs and its effect continues for more than 180 days the affected party shall have right to cancel the contract.

As soon as reasonably practicable following the date of commencement of a Force Majeure Event, and within a reasonable time following the date of termination of a Force Majeure Event, either Party invoking it shall submit to the other Party reasonable proof of the nature of the Force Majeure Event and of its effect upon the performance of the Party's obligations under this Agreement.

The party shall, and shall ensure that its Subcontractors shall, at all times take all reasonable steps within their respective powers and consistent with Good Operating Practices (but without incurring unreasonable additional costs) to:

a) Prevent Force Majeure Events affecting the performance of the party's obligations under this Agreement;
b) mitigate the effect of any Force Majeure Event; and
c) Comply with its obligations under this Agreement.

If the war like situation has developed in a country where a seller's works is located in this P.O. or there is political instability and Indian Embassy located in that country forbids or advises for not having any business dealing with the sellers located in such zone / region/ country then BHEL reserves the right to cancel the order.

20. NON-DISCLOSURE AGREEMENT.

All Drawing and Technical Documents relating to the product or it's manufacture submitted by one party to the other, prior or subsequent to the formation of contract, shall remain property of the submitting party. Drawing, technical documents or other technical information received by one party, shall not without the consent of the other party, be used for any other purpose than that, for which they were provided. Such technical information shall not without the consent of the submitting party, otherwise be used or copied, reproduced, transmitted or communicated to a third party. Patterns supplied by BHEL will remain BHEL's property which shall be returned by the bidder on demand to BHEL. Bidder shall in no way share or use such intellectual property of BHEL to promote his own business with others. BHEL reserves the right to claim damages from the bidder, or take appropriate penal action as deemed fit against the bidder, for any infringement of the provisions contained herein.

21. SETTLEMENT OF DISPUTES / ARBITRATION.

Any dispute / difference arising out of or in connection with this contract, including any question regarding its existence, validity or termination, shall be referred to and finally resolved by arbitration under the Arbitration and Conciliation Act, 1996 of India by a Sole Arbitrator to be appointed with mutual consent of the parties. Such Sole Arbitrator shall be either a retired judge of Supreme Court or High Court or District Court of India or some Advocate having practiced in Indian Courts. The seat or place of arbitration shall be New Delhi, India. The language to be used in the arbitration shall be English. The governing law of the contract shall be the substantive law of India. In case the parties fail

to agree on the appointment of arbitrator within 2 months of the notice invoking arbitration by one party, then the arbitrator shall be appointed in accordance with the Arbitration and Conciliation Act, 1996 of India.

JURIDICTION: The courts of New Delhi, India, shall have exclusive jurisdiction.

22. INFORMATION TO THE BIDDERS.

a) Purchase related information is available at our Business-to-Business (B2B) Portal available on our website www.bhelhwr.co.in .The user ID & password can be obtained by sending a request to concerned purchase executives.

b) Intimate your change in mail address or communication address or changes, if any, by email to ppx_idx@bhelhwr.co.in giving your bidder Code.

c) Please resolve your rejections and unexecuted overdue purchase order immediately which are posted at our B2B Portal, which can be visited through our site www.bhelhwr.co.in .

d) Copy of this Tender Enquiry is being sent through the post/ Courier / E-mail or by any existing means.

e) Invoice description and Unit of measurement should be strictly in accordance with Purchase order.

f) Unit of measurement for dimension and weight should be in metric system only.

23. NOTE.

a) Special conditions of enquiry, if enclosed By BHEL, will supersede the respective standard / general terms of enquiry.

b) Any other Standard terms and Conditions of the bidder attached / referred against the tender enquiry will be treated as null and void ab initio.

c) In order to protect the commercial interests of BHEL, it becomes necessary to take action against suppliers / contractors by way of suspension of business dealings, who either fail to perform or are in default without any reasonable cause, cause loss of business / money / reputation, indulged in malpractices, cheating, bribery, fraud or any other misconducts or formation of cartel so as to influence the biding process or influence the price etc. Guide-lines for Suspension of Business Dealings with Suppliers / Contractors shall prevail over which is available at BHEL website http://www.bhel.com

d) The bidder along with its associate / collaborators / sub-contractors / sub-vendors / consultants / service providers shall strictly adhere to BHEL Fraud Prevention Policy displayed on BHEL website http://www.bhel.com and shall immediately bring to the notice of BHEL-Management about any fraud or suspected fraud as soon as it comes to their notice.

Quotations / Bids not in accordance with General Instructions and Standard Terms & Conditions are likely to be ignored.

ANNEXURE-IV

(Item Details and Delivery Schedule)

Tender No.	Drawing Number	Description	Qty. (Nos)	Lot Qty. (Nos)	Lot Delivery
X/6620/2017 /0478/C	01074158700-00	LP Inner Casing Fabrication	3	2	As per CLAUSE 4 of Annexure X
				1	As per CLAUSE 4 of Annexure X

NOTE: THE QUANTITY INDICATED ABOVE CAN BE INCREASED/ DECREASED.

ANNEXURE-V

(Drawing: 01074158700-00 Rev: 00)

HEEP, Haridwar

COMBINED BILL OF MATERIAL

Printed On:02.01.2018
Printed By:

CBOM No: 01074158700 **CBOM Var:** 00 **Revno:** 5 **Rev Date:** 28.11.2017

Description: LP INNER CASING-FAB **Total weight:** 55112.1

RECORD OF CHANGES

Drawing No	Var	Revno	Rev Date	Description
01074158700	00	1	28.11.2017	For item no. 0 (01074158700): Weight updated to 55112.1 from 56181.2 and Fabricated weight updated to 60632.42 from 61149.4
01074158700	00	2	28.11.2017	Auto Revision 91074258500/00
01074158700	00	3	28.11.2017	Auto Revision 31074158104/00
01074158700	00	5	28.11.2017	Auto Revision 01076258000/00

CBOM - 01074158700 00

	ENGG		MTE		TTX		WTX	
	Initial	Date	Initial	Date	Initial	Date	Initial	Date
Worked By	stegdl	25.11.2017	mtesub	27.11.2017	ttxsso	27.11.2017	wtxskt	27.11.2017
Checked By	stegdl	25.11.2017	mteasr	27.11.2017	ttxsso	27.11.2017	wtxskt	27.11.2017
Approved By	stedkr	28.11.2017	mteasr	27.11.2017	ttxtak	27.11.2017	bk6viv	27.11.2017

HEEP, Haridwar

COMBINED BILL OF MATERIAL

Printed On:02.01.2018
Printed By:

CBOM No: 01074158700 **CBOM Var:** 00 **Revno:** 5 **Rev Date:** 28.11.2017
Description: LP INNER CASING-FAB **Total weight:** 55112.1

Item No / Qty(Total) / Typ Cat Zone	Drawingno Var Mvar / Description / Var/Matl. Description	Mat Code	Mat Spec / Assy. Remarks / ENGG SIZE/GRP	Weight / Inclusion? / Fab Wt	Blank Sizes / Mat Shape / Route	Nos	Qty	Norm/pc / Remarks	Extra Norm / Spare Code	Total Norm / Unit
0	01074158700 00			55112.1						
1(1)	LP INNER CASING-FAB			Y						
MF DR			Y	60632.42	0306-0313-0314-0236					
101	01076258000 00			8394.0						
2(2)	DIFFUSER			Y						
MF DR			N	10874.9	0236-0306					
101-1	01076258001 00			9886.0						
1(2)	DIFFUSER (U/H & L/H)		Sub Assly:U/H(1) & L/H(2)	Y						
MF DR			N	10829.9	0306-0313-0314-0236					
101-1-101	21076258101 00 00	AA1041801246	AA10401	687.0	810.0X5455.0	1	2	2550.0	0.0	5100.0
1(2)	TAPER		P265GH+Z15	Y	PL 70					
MF DR					0072-0301-0306					KG
101-1-102	21076258102 00 00	AA1041801246	AA10401	668.0	1000.0X3280.0	1	2	2550.0	0.0	5100.0
1(2)	TAPER		P265GH+Z15	Y	PL 70			TO BE MADE IN 2 PARTS		
MF DR					0072-0301-0306-0301-0306					KG
101-1-103	21076258103 00 00	AA1041801246	AA10401	400.0	670.0X2710.0	1	2	1050.0	0.0	2100.0
1(2)	TAPER		P265GH+Z15	Y	PL 70			TO BE MADE IN 2 PARTS		
MF DR					0072-0301-0306-0301-0306					KG
101-1-104	21076258104 00 00	AA1041801408	AA10401	679.0	645.0X1105.0	1	2	1295.0	0.0	2590.0
1(2)	PLATE		P265GH+Z15	Y	PL 220					
MF DR					0072-0301-0317-0306					KG
101-1-105	21076258105 00 00	AA1041801408	AA10401	679.0	645.0X1105.0	1	2	1295.0	0.0	2590.0
1(2)	PLATE		P265GH+Z15	Y	PL 220					
MF DR					0072-0301-0317-0306					KG
101-1-107	21076258107 00 00	AA1041801270	AA10401	298.0	795.0X2730.0	1	2	1610.0	0.0	3220.0
1(2)	RING		P265GH	Y	PL 90			TO BE MADE IN 2 PARTS		
MF DR					0072-0301-0306-0301-0306					KG
101-1-110	31076258110 00 00	AA1041801157	AA10401	18.3	434.0X439.0	1	16	40.0	0.0	640.0
8(16)	PLATE		P265GH	Y	PL 25					
MF DR					0072-0301-0306					KG

	ENGG		MTE		TTX		WTX	
	Initial	Date	Initial	Date	Initial	Date	Initial	Date
Worked By	stegdl	25.11.2017	mtesub	27.11.2017	ttxsso	27.11.2017	wtxskt	27.11.2017
Checked By	stegdl	25.11.2017	mteasr	27.11.2017	ttxsso	27.11.2017	wtxskt	27.11.2017
Approved By	stedkr	28.11.2017	mteasr	27.11.2017	ttxtak	27.11.2017	bk6viv	27.11.2017

HEEP, Haridwar

COMBINED BILL OF MATERIAL

Printed On:02.01.2018
Printed By:

CBOM No: 01074158700 **CBOM Var:** 00 **Revno:** 5 **Rev Date:** 28.11.2017

Description: LP INNER CASING-FAB **Total weight:** 55112.1

Item No Qty(Total) Typ Cat Zone	Drawingno Var Mvar Description Var/Matl. Description	Mat Code	Mat Spec Assy. Remarks ENGG SIZE/GRP	Weight Inclusion? Fab Wt	Blank Sizes Mat Shape Route	Nos	Qty	Norm/pc Remarks	Extra Norm Spare Code	Total Norm Unit
101-1-111 1(2) MF DR	41076258111 00 00 ROUND	HW1050268261	HW10568 S355J2+N	71.9 Y	370.0 RND 230 0072-0315-0317-0306	1	2	126.64	0.0	253.28 KG
101-1-113 1(2) MF DR	21076258113 00 00 PLATE	AA1041801211	AA10401 P265GH+Z15	69.5 Y	433.0X694.0 PL 50 0072-0301-0317-0306	1	2	124.0	0.0	248.0 KG
101-1-114 4(8) MF DR	41076258114 00 00 RING	AA1041801181	AA10401 P265GH+Z15	10.3 Y	290.0X290.0 PL 36 0072-0301-0306	1	8	25.0 DIA=290	0.0	200.0 KG
101-1-118 1(2) MF DR	21076258118 00 00 RING	AA1041801211	AA10401 P265GH	529.0 Y	1175.0X2760.0 PL 50 0072-0301-0306-0301-0306	1	2	1336.5 TO BE MADE IN 2 PARTS	0.0	2673.0 KG
101-1-134 1(2) MF DR	21076258134 00 00 TAPER	HW1041801963	AA10401 P265GH+Z15	591.0 Y	1098.0X3510.0 PL 60 0072-0301-0306-0301-0306	1	2	1906.0 TO BE MADE IN 2 PARTS	0.0	3812.0 KG
101-1-201 1(2) MF DR	21076258101 00 00 TAPER	AA1041801246	AA10401 P265GH+Z15	687.0 Y	810.0X5455.0 PL 70 0072-0301-0306	1	2	2550.0	0.0	5100.0 KG
101-1-202 1(2) MF DR	21076258102 00 00 TAPER	AA1041801246	AA10401 P265GH+Z15	668.0 Y	1000.0X3280.0 PL 70 0072-0301-0306-0301-0306	1	2	2550.0 TO BE MADE IN 2 PARTS	0.0	5100.0 KG
101-1-203 1(2) MF DR	21076258103 00 00 TAPER	AA1041801246	AA10401 P265GH+Z15	400.0 Y	670.0X2710.0 PL 70 0072-0301-0306-0301-0306	1	2	1050.0 TO BE MADE IN 2 PARTS	0.0	2100.0 KG
101-1-206 1(2) MF DR	21076258206 00 00 RING	AA1041801211	AA10401 P265GH	843.0 Y	1430.0X2380.0 PL 50 0072-0301-0306-0301-0306	1	2	1403.0 TO BE MADE IN 2 PARTS	0.0	2806.0 KG
101-1-207 1(2) MF DR	21076258107 00 00 RING	AA1041801270	AA10401 P265GH	298.0 Y	795.0X2730.0 PL 90 0072-0301-0306-0301-0306	1	2	1610.0 TO BE MADE IN 2 PARTS	0.0	3220.0 KG

	ENGG		MTE		TTX		WTX	
	Initial	Date	Initial	Date	Initial	Date	Initial	Date
Worked By	stegdl	25.11.2017	mtesub	27.11.2017	ttxsso	27.11.2017	wtxskt	27.11.2017
Checked By	stegdl	25.11.2017	mteasr	27.11.2017	ttxsso	27.11.2017	wtxskt	27.11.2017
Approved By	stedkr	28.11.2017	mteasr	27.11.2017	ttxtak	27.11.2017	bk6viv	27.11.2017

HEEP, Haridwar

COMBINED BILL OF MATERIAL

Printed On:02.01.2018
Printed By:

CBOM No: 01074158700 **CBOM Var:** 00 **Revno:** 5 **Rev Date:** 28.11.2017

Description: LP INNER CASING-FAB **Total weight:** 55112.1

Item No / Qty(Total) / Typ Cat Zone	Drawingno Var Mvar / Description / Var/Matl. Description	Mat Code	Mat Spec / Assy. Remarks / ENGG SIZE/GRP	Weight / Inclusion? / Fab Wt	Blank Sizes / Mat Shape / Route	Nos	Qty	Norm/pc / Remarks	Extra Norm / Spare Code	Total Norm / Unit
101-1-210	31076258110 00 00	AA1041801157	AA10401	18.3	434.0X439.0	1	16	40.0	0.0	640.0
8(16)	PLATE		P265GH	Y	PL 25					
MF DR					0072-0301-0306					KG
101-1-214	41076258114 00 00	AA1041801181	AA10401	10.3	290.0X290.0	1	4	25.0	0.0	100.0
2(4)	RING		P265GH+Z15	Y	PL 36			DIA=290		
MF DR					0072-0301-0306					KG
101-1-221	21076258221 00 00	AA1041801408	AA10401	646.0	626.0X1105.0	1	2	1254.5	0.0	2509.0
1(2)	PLATE		P265GH+Z15	Y	PL 220					
MF DR					0072-0301-0317-0306					KG
101-1-222	21076258222 00 00	AA1041801408	AA10401	646.0	626.0X1105.0	1	2	1254.5	0.0	2509.0
1(2)	PLATE		P265GH+Z15	Y	PL 220					
MF DR					0072-0301-0317-0306					KG
101-1-229	31076258229 00 00	AA1041801190	AA10401	105.0	410.0X900.0	1	2	122.0	0.0	244.0
1(2)	PLATE		P265GH	Y	PL 40					
MF DR					0072-0301-0306					KG
101-1-235	21076258235 00 00	HW1041801963	AA10401	566.0	1060.0X3510.0	1	2	1840.0	0.0	3680.0
1(2)	TAPER		P265GH+Z15	Y	PL 60			TO BE MADE IN 2 PARTS		
MF DR					0072-0301-0306-0301-0306					KG
101-3		HW7113198104	HW7113198	4.5	295.0	1	20	5.5	0.0	110.0
10(20)			~8.8	Y	M48X240					
MF DR	BOLT HEX B - 8.8				0072-0236					NO
102	91074258500 00			32942.1						
1(1)	LP INNER CASING INLET PART FAB		Modified LP IC	Y						
MF DR			N	33590.62	0306-0314-0306					
102-101	11074258101 00	HW1041801998	AA10401	2758.0	2900.0X6150.0	1	2	4410.15	1467.0	5877.15
1(1)	ENCLOSURE PLATE		~P265GH	Y	PL 30			Extra Norm based on MOM		
MF DR					0072-0301-0306-0301-0306					KG
102-102	31074258102 00 00	AA1041801408	AA10401	1181.0	380.0X2930.0	1	2	2019.0	0.0	4038.0
2(2)	JOINT FLANGE		~P265GH+Z15	Y	PL 220					
MF DR					0072-0301-0317-0306					KG

	ENGG		MTE		TTX		WTX	
	Initial	Date	Initial	Date	Initial	Date	Initial	Date
Worked By	stegdl	25.11.2017	mtesub	27.11.2017	ttxsso	27.11.2017	wtxskt	27.11.2017
Checked By	stegdl	25.11.2017	mteasr	27.11.2017	ttxsso	27.11.2017	wtxskt	27.11.2017
Approved By	stedkr	28.11.2017	mteasr	27.11.2017	ttxtak	27.11.2017	bk6viv	27.11.2017

HEEP, Haridwar

COMBINED BILL OF MATERIAL

Printed On:02.01.2018
Printed By:

CBOM No: 01074158700 **CBOM Var:** 00 **Revno:** 5 **Rev Date:** 28.11.2017

Description: LP INNER CASING-FAB **Total weight:** 55112.1

Item No / Qty(Total) / Typ Cat Zone	Drawingno Var Mvar / Description / Var/Matl. Description	Mat Code	Mat Spec / Assy. Remarks / ENGG SIZE/GRP	Weight / Inclusion? / Fab Wt	Blank Sizes / Mat Shape / Route	Nos	Qty	Norm/pc / Remarks	Extra Norm / Spare Code	Total Norm / Unit
102-103	21074258103 00 00	AA1041801181	AA10401	790.0	1850.0X3020.0	1	2	1660.0	0.0	3320.0
2(2)	HALF CONE		~P265GH	Y	PL 36			TO BE MADE IN 2 PARTS.		
MF DR					0072-0301-0306-0301-0306					KG
102-104	21074258104 00 00	AA1041801157	AA10401	532.0	1790.0X2960.0	1	2	1093.0	0.0	2186.0
2(2)	HALF CONE		~P265GH	Y	PL 25			TO BE MADE IN 2 PARTS.		
MF DR					0072-0301-0306-0301-0306					KG
102-105	31074258105 00 00	AA1041801335	AA10401	564.0	700.0X1880.0	1	3	1520.0	1372.0	4412.0
2(2)	HALF RING		~P265GH	Y	PL 140			In 2 parts;Ex Nrm based on MOM		
MF DR					0072-0301-0306-0301-0306					KG
102-108	31074258108 00 00	AA1041801289	AA10401	2190.0	695.0X4722.0	1	2	2708.0	0.0	5416.0
2(2)	HALF RING		~P265GH	Y	PL 100					
MF DR					0072-0301-0306					KG
102-109	31074258109 00 00	HW1050268083	HW10568	12.2	344.0	1	8	14.3	0.0	114.4
8(8)	ANCHOR		16MO3	Y	RND 80					
MF DR					0072-0315-0306					KG
102-110	31074258110 00 00	HW1041801963	AA10401	5.2	100.0X145.0	1	2	7.2	0.0	14.4
2(2)	PLATE		~P265GH	Y	PL 60					
MF DR					0072-0301-0306					KG
102-111	31074258111 00 00	HW1041801963	AA10401	5.0	100.0X145.0	1	2	7.2	0.0	14.4
2(2)	PLATE		~P265GH	Y	PL 60					
MF DR					0072-0301-0306					KG
102-114	41074258114 00 00	AA1041801335	AA10401	50.1	220.0X250.0	1	4	63.3	0.0	253.2
4(4)	JOINT FLANGE		~P265GH+Z15	Y	PL 140			Extra Norm incl in Item 105		
MF DR					0072-0301-0306					KG
102-121	21074258121 00 00	HW1041801998	AA10401	121.0	700.0X1610.0	1	2	279.0	0.0	558.0
2(2)	PLATE		~P265GH	Y	PL 30			Extra Norm incl in Item 101		
MF DR					0072-0301-0306					KG
102-122	21074258122 00 00	HW1041801998	AA10401	304.0	1041.0X2320.0	1	2	598.0	0.0	1196.0
2(2)	PLATE		~P265GH	Y	PL 30			Extra Norm incl in Item 101		
MF DR					0072-0301-0306					KG

	ENGG		MTE		TTX		WTX	
	Initial	Date	Initial	Date	Initial	Date	Initial	Date
Worked By	stegdl	25.11.2017	mtesub	27.11.2017	ttxsso	27.11.2017	wtxskt	27.11.2017
Checked By	stegdl	25.11.2017	mteasr	27.11.2017	ttxsso	27.11.2017	wtxskt	27.11.2017
Approved By	stedkr	28.11.2017	mteasr	27.11.2017	ttxtak	27.11.2017	bk6viv	27.11.2017

HEEP, Haridwar

COMBINED BILL OF MATERIAL

Printed On:02.01.2018
Printed By:

CBOM No: 01074158700 **CBOM Var:** 00 **Revno:** 5 **Rev Date:** 28.11.2017

Description: LP INNER CASING-FAB **Total weight:** 55112.1

Item No / Qty(Total) / Typ Cat Zone	Drawingno Var Mvar / Description / Var/Matl. Description	Mat Code	Mat Spec / Assy. Remarks / ENGG SIZE/GRP	Weight / Inclusion? / Fab Wt	Blank Sizes / Mat Shape / Route	Nos	Qty	Norm/pc / Remarks	Extra Norm / Spare Code	Total Norm / Unit
102-123	21074258123 00 00	AA1041801335	AA10401	292.0	700.0X1000.0	1	4	751.0	0.0	3004.0
4(4)	FLANGE		~P265GH+Z15	Y	PL 140			Extra Norm incl in Item 105		
MF DR					0072-0301-0317-0306					KG
102-124	31074258124 00 00	AA1041801190	AA10401	59.0	244.0X1286.0	1	2	103.6	0.0	207.2
2(2)	PLATE		~P265GH+Z15	Y	PL 40					
MF DR					0072-0301-0306					KG
102-125	31074258125 00 00	AA1041801190	AA10401	131.0	794.0X1635.0	1	2	428.5	0.0	857.0
2(2)	PLATE		~P265GH	Y	PL 40			BLANK FOR 2 NOS.		
MF DR					0072-0301-0306					KG
102-148	41074258148 00 00	AA1010209248	AA10109	3.5	100.0	1	3	5.25	0.0	15.75
3(3)	CONNECTION		~P265GH	Y	RND 80					
MF DR					0072-0315-0317-0306					KG
102-149	21074258149 00 00	AA1041801297	AA10401	512.0	700.0X1000.0	1	1	577.5	0.0	577.5
1(1)	BLOCK FLANGE		~P265GH	Y	PL 110					
MF DR					0072-0301-0236					KG
102-150	41074258150 00 00	AA1041801297	AA10401	536.0	1585.0X1585.0	1	1	2280.0	0.0	2280.0
1(1)	RING		~P265GH+Z15	Y	PL 110			OFFCUT=1140 KG		
MF DR					0072-0301-0306					KG
102-151	31074258151 00 00	HW1041801998	AA10401	148.0	152.0X4474.0	1	1	169.0	0.0	169.0
1(1)	PIPE		~P265GH	Y	PL 30			Extra Norm incl in Item 101		
MF DR					0072-0301-0306-0301-0306					KG
102-152	41074258152 00 00	W97310742044		0.92	0.0	0	0	0.0	0.0	0.0
30(30)	HEXAGON HEAD SCREW (M30*130)		PROPERTY CLASS: 5.6	Y						
BO DR					0074-0236					NO
102-153	41074258153 00 00	AA1011819023	AA10119	3.5	275.0X745.0	1	8	8.45	0.0	67.6
8(8)	BACKING PLATE		~S235JR	Y	PL 5			TO BE MADE IN 6 PARTS.		
MF					0072-0301-0306					KG
102-156	31074258156 00 00	HW1050268091	HW10568	15.3	344.0	1	2	20.1	0.0	40.2
2(2)	ANCHOR		16MO3	Y	RND 95					
MF DR					0072-0315-0306					KG

	ENGG		MTE		TTX		WTX	
	Initial	Date	Initial	Date	Initial	Date	Initial	Date
Worked By	stegdl	25.11.2017	mtesub	27.11.2017	ttxsso	27.11.2017	wtxskt	27.11.2017
Checked By	stegdl	25.11.2017	mteasr	27.11.2017	ttxsso	27.11.2017	wtxskt	27.11.2017
Approved By	stedkr	28.11.2017	mteasr	27.11.2017	ttxtak	27.11.2017	bk6viv	27.11.2017

HEEP, Haridwar

COMBINED BILL OF MATERIAL

Printed On:02.01.2018
Printed By:

CBOM No: 01074158700 **CBOM Var:** 00 **Revno:** 5 **Rev Date:** 28.11.2017

Description: LP INNER CASING-FAB **Total weight:** 55112.1

Item No / Qty(Total) / Typ Cat Zone	Drawingno Var Mvar / Description / Var/Matl. Description	Mat Code	Mat Spec / Assy. Remarks / ENGG SIZE/GRP	Weight / Inclusion? / Fab Wt	Blank Sizes / Mat Shape / Route	Nos	Qty	Norm/pc / Remarks	Extra Norm / Spare Code	Total Norm / Unit
102-157	31074258157 00 00	AA1041801408	AA10401	74.5	172.0X320.0	1	4	99.8	0.0	399.2
4(4)	JOINT FLANGE		~P265GH+Z15	Y	PL 220					
MF DR					0072-0301-0306					KG
102-202	31074258102 00 00	AA1041801408	AA10401	1181.0	380.0X2930.0	1	2	2019.0	0.0	4038.0
2(2)	JOINT FLANGE		~P265GH+Z15	Y	PL 220					
MF DR					0072-0301-0317-0306					KG
102-205	31074258105 00 00	AA1041801335	AA10401	564.0	700.0X1880.0	1	3	1520.0	1372.0	4412.0
2(2)	HALF RING		~P265GH	Y	PL 140			In 2 parts;Ex Nrm based on MOM		
MF DR					0072-0301-0306-0301-0306					KG
102-208	31074258208 00 00	AA1041801289	AA10401	1972.0	630.0X4722.0	1	2	2455.0	0.0	4910.0
2(2)	HALF RING		~P265GH	Y	PL 100					
MF DR					0072-0301-0306					KG
102-209	31074258109 00 00	HW1050268083	HW10568	12.2	344.0	1	8	14.3	0.0	114.4
8(8)	ANCHOR		16MO3	Y	RND 80					
MF DR					0072-0315-0306					KG
102-211	11074258211 00 00	HW1041801998	AA10401	3327.0	2900.0X6150.0	1	1	4410.15	0.0	4410.15
1(1)	ENCLOSURE PLATE		~P265GH	Y	PL 30			Extra Norm incl in Item 101		
MF DR					0072-0301-0306-0301-0317-0301-0306					KG
102-212	31074258212 00 00	AA1041801181	AA10401	668.0	1900.0X3070.0	1	2	1731.0	0.0	3462.0
2(2)	HALF CONE		~P265GH	Y	PL 36			To be made in 2 parts.		
MF DR					0072-0301-0306-0301-0306					KG
102-213	21074258213 00 00	AA1041801157	AA10401	557.0	1900.0X3070.0	1	2	1202.0	0.0	2404.0
2(2)	HALF CONE		~P265GH	Y	PL 25			To be made in 2 parts.		
MF DR					0072-0301-0306-0301-0306					KG
102-214	41074258114 00 00	AA1041801335	AA10401	50.1	220.0X250.0	1	4	63.3	0.0	253.2
4(4)	JOINT FLANGE		~P265GH+Z15	Y	PL 140			Extra Norm incl in Item 105		
MF DR					0072-0301-0306					KG
102-216	21074258216 00 00	AA1041801076	AA10401	156.0	1575.0X2225.0	1	4	289.0	560.0	1138.0
2(2)	PIPE		~P265GH	Y	PL 10			Extra Norm based on MOM		
MF DR					0072-0301-0306-0301-0306					KG

	ENGG		MTE		TTX		WTX	
	Initial	Date	Initial	Date	Initial	Date	Initial	Date
Worked By	stegdl	25.11.2017	mtesub	27.11.2017	ttxsso	27.11.2017	wtxskt	27.11.2017
Checked By	stegdl	25.11.2017	mteasr	27.11.2017	ttxsso	27.11.2017	wtxskt	27.11.2017
Approved By	stedkr	28.11.2017	mteasr	27.11.2017	ttxtak	27.11.2017	bk6viv	27.11.2017

HEEP, Haridwar

COMBINED BILL OF MATERIAL

Printed On:02.01.2018
Printed By:

CBOM No: 01074158700 **CBOM Var:** 00 **Revno:** 5 **Rev Date:** 28.11.2017

Description: LP INNER CASING-FAB **Total weight:** 55112.1

Item No / Qty(Total) / Typ Cat Zone	Drawingno Var Mvar / Description / Var/Matl. Description	Mat Code	Mat Spec / Assy. Remarks / ENGG SIZE/GRP	Weight / Inclusion? / Fab Wt	Blank Sizes / Mat Shape / Route	Nos	Qty	Norm/pc / Remarks	Extra Norm / Spare Code	Total Norm / Unit
102-217	21074258217 00 00	AA1041801076	AA10401	156.0	1575.0X2225.0	1	2	289.0	0.0	578.0
2(2)	PIPE		~P265GH	Y	PL 10			Extra Norm incl in Item 216		
MF DR					0072-0301-0306-0301-0306					KG
102-218	31074258218 00 00	AA1041801220	AA10401	4.8	100.0X145.0	1	2	6.7	0.0	13.4
2(2)	PLATE		~P265GH	Y	PL 56					
MF DR					0072-0301-0317-0306					KG
102-219	31074258219 00 00	AA1041801220	AA10401	4.8	100.0X145.0	1	2	6.7	0.0	13.4
2(2)	PLATE		~P265GH	Y	PL 56					
MF DR					0072-0301-0317-0306					KG
102-220	31074258220 00 00	AA1041801238	AA10401	21.4	140.0X350.0	1	2	25.5	0.0	51.0
2(2)	PLATE		~P265GH	Y	PL 63					
MF DR					0072-0301-0306					KG
102-231	31074258231 00 00	AA1041801076	AA10401	81.4	760.0X1590.0	1	2	100.0	0.0	200.0
2(2)	PIPE		~P265GH	Y	PL 10			Extra Norm incl in Item 216		
MF DR					0072-0301-0306-0301-0306					KG
102-234	21074258234 00 00	AA1041801076	AA10401	33.4	625.0X1382.0	1	2	71.3	0.0	142.6
2(2)	PLATE		~P265GH	Y	PL 10			Extra Norm incl in Item 216		
MF DR					0072-0301-0306					KG
102-235	21074258235 00 00	AA1041801076	AA10401	33.4	625.0X1382.0	1	2	71.3	0.0	142.6
2(2)	PLATE		~P265GH	Y	PL 10			Extra Norm incl in Item 216		
MF DR					0072-0301-0306					KG
102-238	31074258238 00 00	AA1041801076	AA10401	33.4	213.0X2225.0	1	4	39.0	0.0	156.0
4(4)	PIPE		~P265GH	Y	PL 10			Extra Norm incl in Item 216		
MF DR					0072-0301-0306-0301-0306					KG
102-239	41074258239 00 00	AA1041801211	AA10401	4.1	100.0X130.0	1	4	5.36	0.0	21.44
4(4)	RIB		~P265GH	Y	PL 50					
MF DR					0072-0301-0306					KG
102-242	21074258242 00 00	HW1041801998	AA10401	183.0	773.0X1326.0	1	2	254.0	0.0	508.0
2(2)	PLATE		~P265GH	Y	PL 30			Extra Norm incl in Item 101		
MF DR					0072-0301-0317-0306					KG

	ENGG		MTE		TTX		WTX	
	Initial	Date	Initial	Date	Initial	Date	Initial	Date
Worked By	stegdl	25.11.2017	mtesub	27.11.2017	ttxsso	27.11.2017	wtxskt	27.11.2017
Checked By	stegdl	25.11.2017	mteasr	27.11.2017	ttxsso	27.11.2017	wtxskt	27.11.2017
Approved By	stedkr	28.11.2017	mteasr	27.11.2017	ttxtak	27.11.2017	bk6viv	27.11.2017

HEEP, Haridwar

COMBINED BILL OF MATERIAL

Printed On:02.01.2018
Printed By:

CBOM No: 01074158700 **CBOM Var:** 00 **Revno:** 5 **Rev Date:** 28.11.2017

Description: LP INNER CASING-FAB **Total weight:** 55112.1

Item No / Qty(Total) / Typ Cat Zone	Drawingno Var Mvar / Description / Var/Matl. Description	Mat Code	Mat Spec / Assy. Remarks / ENGG SIZE/GRP	Weight / Inclusion? / Fab Wt	Blank Sizes / Mat Shape / Route	Nos	Qty	Norm/pc / Remarks	Extra Norm / Spare Code	Total Norm / Unit
102-253	41074258253 00 00	AA1011819023	AA10119	4.82	290.0X1025.0	1	4	12.3	0.0	49.2
4(4)	BACKING PLATE		~235JR	Y	PL 5			TO BE MADE IN 6 PARTS.		
MF DR					0072-0301-0306					KG
102-255	31074258255 00 00	AA1041801246	AA10401	13.4	120.0X300.0	1	2	20.8	0.0	41.6
2(2)	PLATE		~P265GH	Y	PL 70					
MF DR					0072-0301-0306					KG
102-256	31074258156 00 00	HW1050268091	HW10568	15.3	344.0	1	2	20.1	0.0	40.2
2(2)	ANCHOR		16MO3	Y	RND 95					
MF DR					0072-0315-0306					KG
102-257	31074258157 00 00	AA1041801408	AA10401	74.5	172.0X320.0	1	4	99.8	0.0	399.2
4(4)	JOINT FLANGE		~P265GH+Z15	Y	PL 220					
MF DR					0072-0301-0306					KG
102-258	41074258258 00 00	AA1011819023	AA10119	4.81	290.0X1020.0	1	4	12.2	0.0	48.8
4(4)	BACKING PLATE		~235JR	Y	PL 5			-TO BE MADE IN 6 PARTS.		
MF DR					0072-0301-0306					KG
104	31074158104 00	AA1041801254	AA10401	7.7	110.0X130.0	1	4	8.84	0.0	35.36
4(4)	PLATE		P265GH	Y	PL 75					
MF DR					0072-0301-0317-0301-0306					KG
204	11074158204 00	W91310741018	HW19592	774.0	0.0	1	1	1.0	0.0	1.0
1(1)	SUPPORT ARM		GP240GH	Y	TRP			Casting drg 11074158901 var 00		
CE DR					0073-0236-0306					NO
205	11074158204 00	W91310741018	HW19592	774.0	0.0	1	1	1.0	0.0	1.0
1(1)	SUPPORT ARM		GP240GH	Y	TRP			Casting drg 11074158901 var 00		
CE DR					0073-0236-0306					NO
206	11074158206 00	W91310741026	HW19592	774.0	0.0	1	1	1.0	0.0	1.0
1(1)	SUPPORT ARM		GP240GH	Y	TRP			Casting drg 11074158901 var 01		
CE DR					0073-0236-0306					NO
207	11074158206 00	W91310741026	HW19592	774.0	0.0	1	1	1.0	0.0	1.0
1(1)	SUPPORT ARM		GP240GH	Y	TRP			Casting drg 11074158901 var 01		
CE DR					0073-0236-0306					NO

	ENGG		MTE		TTX		WTX	
	Initial	Date	Initial	Date	Initial	Date	Initial	Date
Worked By	stegdl	25.11.2017	mtesub	27.11.2017	ttxsso	27.11.2017	wtxskt	27.11.2017
Checked By	stegdl	25.11.2017	mteasr	27.11.2017	ttxsso	27.11.2017	wtxskt	27.11.2017
Approved By	stedkr	28.11.2017	mteasr	27.11.2017	ttxtak	27.11.2017	bk6viv	27.11.2017

HEEP, Haridwar

COMBINED BILL OF MATERIAL

Printed On:02.01.2018
Printed By:

CBOM No: 01074158700 **CBOM Var:** 00 **Revno:** 5 **Rev Date:** 28.11.2017

Description: LP INNER CASING-FAB **Total weight:** 55112.1

Item No / Qty(Total) / Typ Cat Zone	Drawingno Var Mvar / Description / Var/Matl. Description	Mat Code	Mat Spec / Assy. Remarks / ENGG SIZE/GRP	Weight / Inclusion? / Fab Wt	Blank Sizes / Mat Shape / Route	Nos	Qty	Norm/pc / Remarks	Extra Norm / Spare Code	Total Norm / Unit
208	31074158208 00	W95310741020	AA19341	615.0	0.0	1	2	1.0	0.0	2.0
2(2)	CENTER GUIDE		S355J2G3	Y				Forging drg no 31074158999		
FE DR					0073-0236-0306					NO
213	41074158213 00	AA1041801190	AA10401	28.4	334.0X359.0	1	4	39.5	0.0	158.0
4(4)	PLATE		~P265GH	Y	PL 40					
MF DR					0072-0301-0306					KG
214	21074158214 00	AA1041801190	AA10401	116.0	512.0X1200.0	1	2	202.6	0.0	405.2
2(2)	PLATE		~P265GH	Y	PL 40					
MF DR					0072-0301-0306					KG
215	41074158215 00	HW1041801963	AA10401	46.5	300.0X359.0	1	4	52.3	0.0	209.2
4(4)	PLATE		~P265GH	Y	PL 60					
MF DR					0072-0301-0306					KG
220	41076258220 00	HW1055276017	AA19341	97.0	0.0	0	0	183.0	0.0	366.0
2(2)	ROUND		S355J2G3	Y	BL 200					
FI DR					0072-0356-0359-0317-0306					KG
221	31074158221 00	AA1041801190	AA10401	17.7	155.0X445.0	1	2	22.8	0.0	45.6
2(2)	PLATE		~P265GH	Y	PL 40					
MF DR					0072-0301-0306					KG
222		AA1011819023	AA10119	1.3	20.0X1652.0	1	1	1.4	0.0	1.4
1(1)	FLAT (20*5*1652)		~S235JR	Y	PL 5					
RM DR	ST-FE410 WB-PLATE				0072-0301-0306					KG
223	41076258222 00	AA1041801190	AA10401	10.9	270.0X270.0	1	4	24.1	0.0	96.4
4(4)	RING		~P265GH	Y	PL 40					
MF DR					0072-0301-0317-0306					KG

	ENGG		MTE		TTX		WTX	
	Initial	Date	Initial	Date	Initial	Date	Initial	Date
Worked By	stegdl	25.11.2017	mtesub	27.11.2017	ttxsso	27.11.2017	wtxskt	27.11.2017
Checked By	stegdl	25.11.2017	mteasr	27.11.2017	ttxsso	27.11.2017	wtxskt	27.11.2017
Approved By	stedkr	28.11.2017	mteasr	27.11.2017	ttxtak	27.11.2017	bk6viv	27.11.2017

FIRST ANGLE PROJECTION (ALL DIMENSIONS ARE IN mm) FORM DG 39(B)

REV	DATE	ALTERED	REV	DATE	ALTERED MONIKA	~~GMS No.~~/ C.B.O.M.– NO.	STATUS OF DRG
		CHECKED	01	05.06.15	CHECKED DINESH	91074258000	U

ZONE		ZONE	AS PER C/A NO. STE-15-F0199.	AGREED DEPT	NAME	SIGN	DATE
				WT	H.VERMA	SD/–	28.7.12

GRADE OF UNTOL.DIM M/CG. ~~C~~/M/~~F~~ –AA0230208 | WELDING ~~A~~/B/~~C~~/~~D~~ AA0621104 | GAS CUTTING–T3 AA0621101

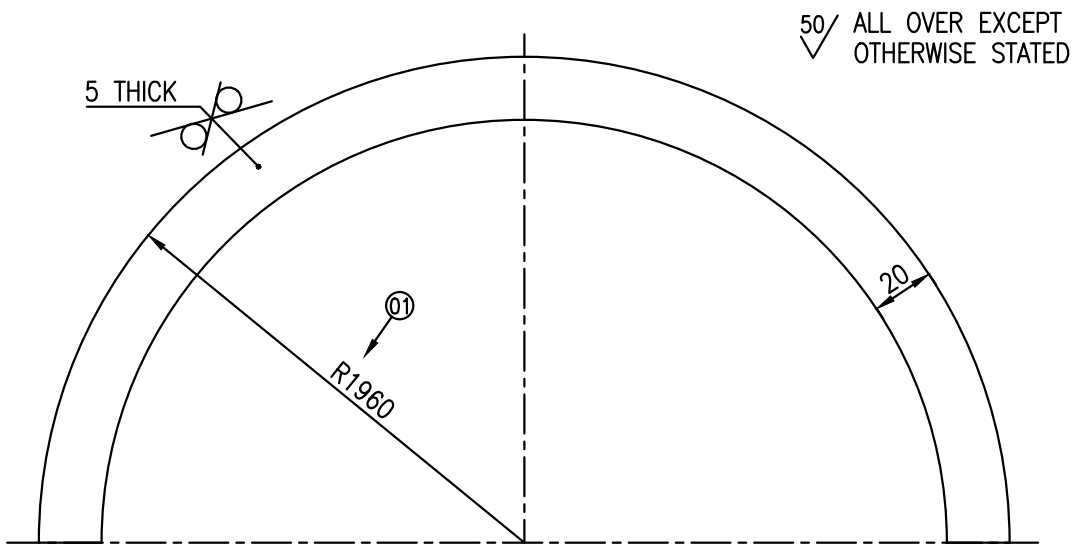

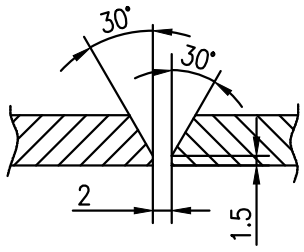

DETAIL–I

T.R.

IDENTIFICATION ACCORDING TO HW0400397.

NOTE :

IF REQUIRED, THE RING CAN BE MADE IN PARTS BY WELDING AS PER DETAIL–I WELD CLASSIFICATION GROUP ACC. TO HW0620099; CS, WITHOUT OPEN ROOT DEFECT. WELDING TEST SCOPE ACC. TO HW0850199; CSR 3. THE PLATE IS TO BE STRAIGHTENED AFTER CUTTING AND WELDING.

COPYRIGHT AND CONFIDENTIAL

THE INFORMATION ON THIS DOCUMENT IS THE PROPERTY OF BHARAT HEAVY ELECTRICALS LIMITED. IT MUST NOT BE USED DIRECTLY OR INDIRECTLY IN ANY WAY DETERIMENTAL TO THE INTEREST OF THE COMPANY.

Ref.Drawing No> LII41112

Sign & Date

	NAME	SIGN	DATE	NO. OF VAR
DRN	ANOOP	SD/–	27.7.12	—
CHD	DINESH	SD/–	27.7.12	
APPD	D.K. RAY	SD/–	6.08.12	

BHARAT HEAVY ELECTRICALS LTD.
RANIPUR, HARDWAR

DEPT STE	SCALE	WEIGHT (KG)	REF. TO ASSY. DRG.	ITEM No.	NO. OF ITEMS
CODE 4011	NTS	4.81	9–10742–58000	258	—

Inventory No.

TITLE : **BACKING PLATE**

CARD CODE

DRAWING NO. 7 4 10742 58258 22 23 24 —

SHEET No. 01 | No. OF SHEETS 01

A4 SIZE

FIRST ANGLE PROJECTION (ALL DIMENSIONS ARE IN mm) FORM DG 39(B)

REV	DATE	ALTERED	REV	DATE	ALTERED MONIKA	~~GMS No.~~/ C.B.O.M.– NO.	STATUS OF DRG
		CHECKED	01	05.06.15	CHECKED DINESH	91074258000	U

ZONE		ZONE	AS PER C/A NO. STE-15-F0199.	AGREED DEPT	NAME	SIGN	DATE
				WT	H.VERMA	SD/–	28.7.12

GRADE OF UNTOL.DIM M/CG. ~~C~~/M/~~F~~ –AA0230208 | WELDING ~~A~~/B/~~C~~/~~D~~ AA0621104 | GAS CUTTING–T3 AA0621101

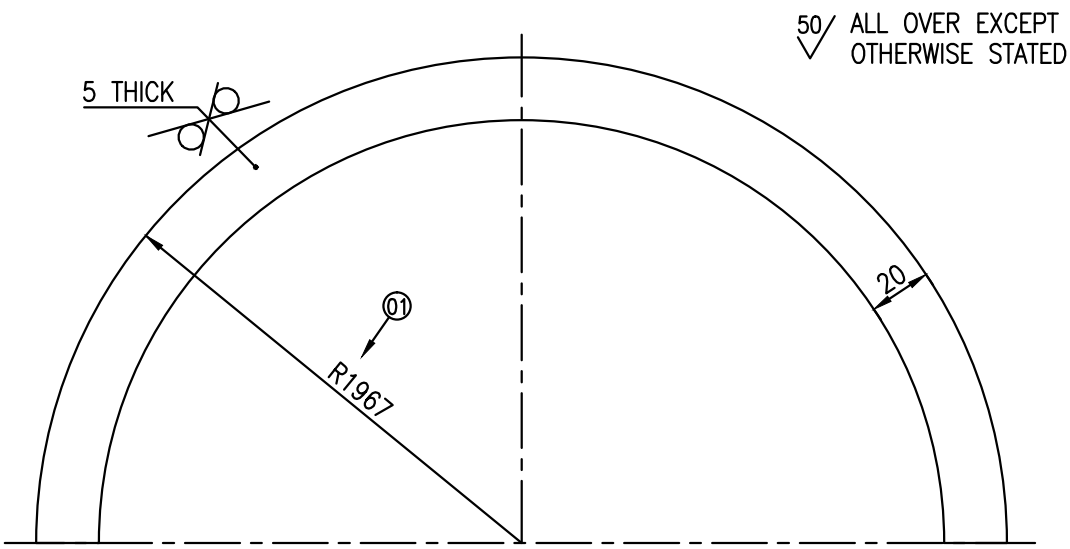

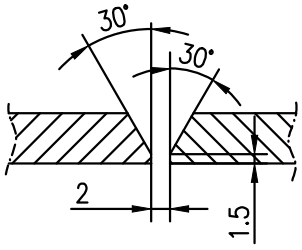

DETAIL–I

T.R.

IDENTIFICATION ACCORDING TO HW0400397.

NOTE :

IF REQUIRED, THE RING CAN BE MADE IN PARTS BY WELDING AS PER DETAIL–I WELD CLASSIFICATION GROUP ACC. TO HW0620099; CS, WITHOUT OPEN ROOT DEFECT. WELDING TEST SCOPE ACC. TO HW0850199; CSR 3. THE PLATE IS TO BE STRAIGHTENED AFTER CUTTING AND WELDING.

COPYRIGHT AND CONFIDENTIAL

THE INFORMATION ON THIS DOCUMENT IS THE PROPERTY OF BHARAT HEAVY ELECTRICALS LIMITED. IT MUST NOT BE USED DIRECTLY OR INDIRECTLY IN ANY WAY DETERIMENTAL TO THE INTEREST OF THE COMPANY.

Ref.Drawing No> LI41112

Sign & Date

	NAME	SIGN	DATE	NO. OF VAR
DRN	ANOOP	SD/–	27.7.12	—
CHD	DINESH	SD/–	27.7.12	
APPD	D.K. RAY	SD/–	6.08.12	

BHARAT HEAVY ELECTRICALS LTD.
RANIPUR, HARDWAR

DEPT STE	SCALE	WEIGHT (KG)	REF. TO ASSY. DRG.	ITEM No.	NO. OF ITEMS
CODE 4011	NTS	4.82	9–10742–58000	253	—

Inventory No.

TITLE : **BACKING PLATE**

CARD CODE

DRAWING NO. 7 4 10742 58253 22 23 24 —

SHEET No. 01 | No. OF SHEETS 01

A4 SIZE

FIRST ANGLE PROJECTION (ALL DIMENSIONS ARE IN mm) FORM DG 39(B)

REV	DATE	ALTERED / CHECKED	REV	DATE	ALTERED / CHECKED	~~GMS No.~~/ C.B.O.M.– NO. 9–10742–58000	STATUS OF DRG U
ZONE			ZONE			AGREED DEPT: WT / NAME: H. VERMA / SIGN: sd/– / DATE: 28.07.12	

GRADE OF UNTOL.DIM M/CG. – AA0230208 m | WELDING–CLASS 'B' OF AA0621104 | GAS CUTTING–TABLE 3 OF AA0621101

50/ ALL OVER EXCEPT OTHERWISE STATED

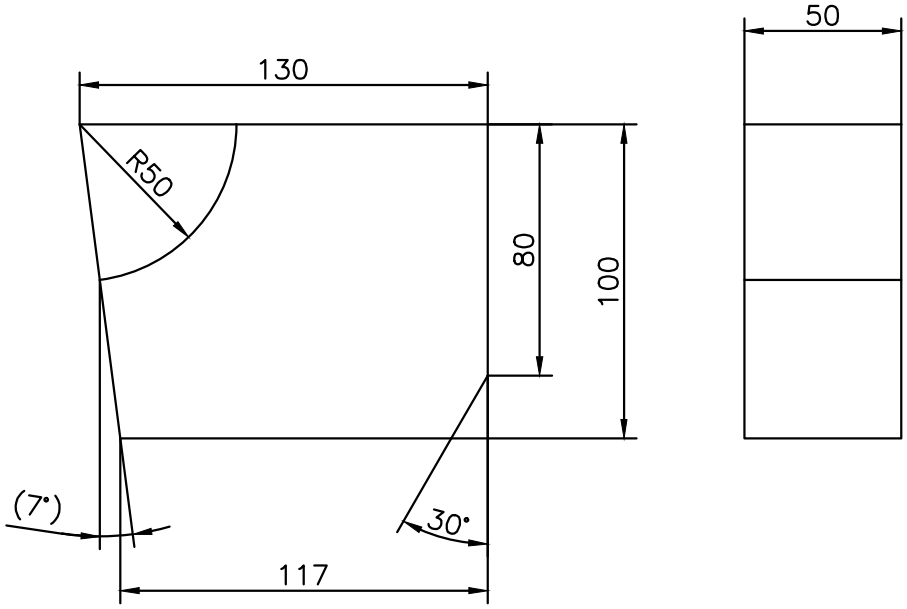

COPYRIGHT AND CONFIDENTIAL
THE INFORMATION ON THIS DOCUMENT IS THE PROPERTY OF BHARAT HEAVY ELECTRICALS LIMITED. IT MUST NOT BE USED DIRECTLY OR INDIRECTLY IN ANY WAY DETERIMENTAL TO THE INTEREST OF THE COMPANY.

TIN NO. PSK046L695

Ref.Drawing No> DSPPG–0127049

Sign & Date

Inventory No.

TECHNICAL REQUIREMENT:–

1. IDENTIFICATION ACCORDING TO HW 0400397

BHARAT HEAVY ELECTRICALS LTD.
RANIPUR, HARDWAR

	NAME	SIGN	DATE
DRN	POONAM	sd/–	1.12.2011
CHD	DINESH	sd/–	2.12.2011
APPD	D.K.RAY	sd/–	

NO. OF VAR

DEPT STE	SCALE	WEIGHT (KG)	REF. TO ASSY. DRG.	ITEM No.	NO. OF ITEMS
CODE 4011	1:2	4.1	9–10742–58000	239	——

TITLE : **RIB**

CARD CODE

DRAWING NO. 7 4–10742–58239 22 23 24

SHEET No. 01 | No. OF SHEETS 01

A4 SIZE

FIRST ANGLE PROJECTION (ALL DIMENSIONS ARE IN mm) FORM DG 39(B)

REV	DATE	ALTERED	REV	DATE	ALTERED MONIKA	~~GMS No.~~/ C.B.O.M.– NO.	STATUS OF DRG
		CHECKED	01	05.06.15	CHECKED DINESH	91074258000	U

ZONE		ZONE	AS PER C/A NO. STE-15-F0199.	AGREED DEPT	NAME	SIGN	DATE
				WT	H.VERMA	SD/–	28.7.12

GRADE OF UNTOL.DIM M/CG. ~~C~~/M/~~F~~ –AA0230208 | WELDING ~~A~~/B/~~C~~/~~D~~ AA0621104 | GAS CUTTING–T3 AA0621101

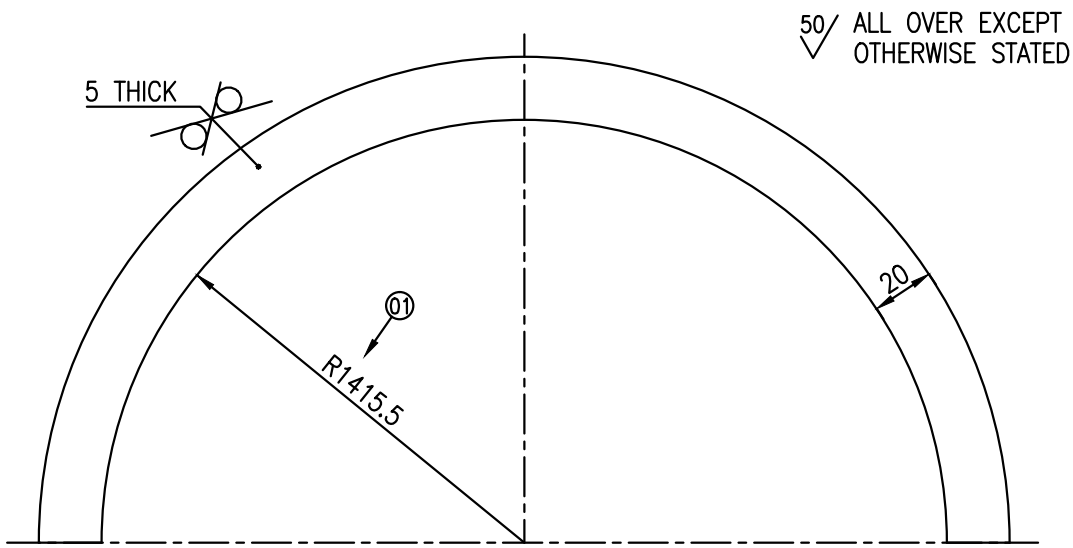

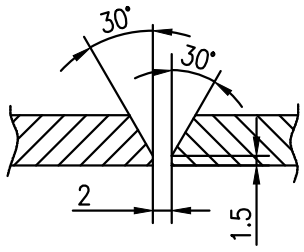

DETAIL–I

T.R.

IDENTIFICATION ACCORDING TO HW0400397.

NOTE :

IF REQUIRED, THE RING CAN BE MADE IN PARTS BY WELDING AS PER DETAIL–I WELD CLASSIFICATION GROUP ACC. TO HW0620099; CS, WITHOUT OPEN ROOT DEFECT. WELDING TEST SCOPE ACC. TO HW0850199; CSR 3. THE PLATE IS TO BE STRAIGHTENED AFTER CUTTING AND WELDING.

COPYRIGHT AND CONFIDENTIAL
THE INFORMATION ON THIS DOCUMENT IS THE PROPERTY OF BHARAT HEAVY ELECTRICALS LIMITED. IT MUST NOT BE USED DIRECTLY OR INDIRECTLY IN ANY WAY DETERIMENTAL TO THE INTEREST OF THE COMPANY.

Ref.Drawing No> LII41112

Sign & Date

	NAME	SIGN	DATE	NO. OF VAR
DRN	ANOOP	SD/–	27.7.12	—
CHD	DINESH	SD/–	27.7.12	
APPD	D.K. RAY	SD/–	6.08.12	

BHARAT HEAVY ELECTRICALS LTD.
RANIPUR, HARDWAR

DEPT STE	SCALE	WEIGHT (KG)	REF. TO ASSY. DRG.	ITEM No.	NO. OF ITEMS
CODE 4011	NTS	3.50	9–10742–58000	153	—

Inventory No.

TITLE : **BACKING PLATE**

CARD CODE

DRAWING NO. 7 4 10742 58153 22 23 24 —

SHEET No. 01 | No. OF SHEETS 01

A4 SIZE

FIRST ANGLE PROJECTION (ALL DIMENSIONS ARE IN mm) FORM DG 39(B)

REV	DATE	ALTERED	REV	DATE	ALTERED MANOJ	~~GMS No.~~/ C.B.O.M.– NO.	STATUS OF DRG
		CHECKED	01	23.7.15	CHECKED DINESH	9–10742–58000	U

ZONE		ZONE	WEIGHT 558 CHANGE TO 536KG C/A NO.STE–15–F0245	AGREED DEPT	NAME	SIGN	DATE
				WT	H. VERMA	sd/–	28.07.12

GRADE OF UNTOL.DIM M/CG. – AA0230208 m | WELDING–CLASS 'B' OF AA0621104 | GAS CUTTING–TABLE 3 OF AA0621101

50/ ALL OVER EXCEPT OTHERWISE STATED

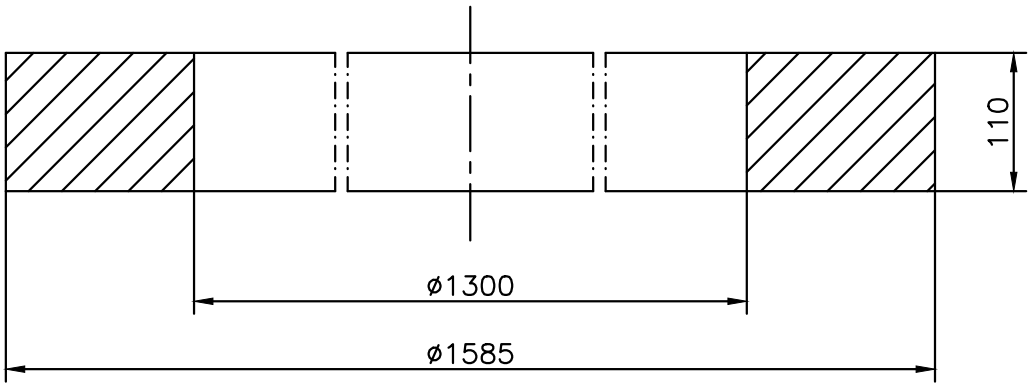

COPYRIGHT AND CONFIDENTIAL
THE INFORMATION ON THIS DOCUMENT IS THE PROPERTY OF BHARAT HEAVY ELECTRICALS LIMITED. IT MUST NOT BE USED DIRECTLY OR INDIRECTLY IN ANY WAY DETERIMENTAL TO THE INTEREST OF THE COMPANY.

TIN NO. PSK046L666

Ref.Drawing No> DSPPG–0127058

Sign & Date

Inventory No.

TECHNICAL REQUIREMENT

1. IDENTIFICATION ACCORDING TO HW 0400397

BHARAT HEAVY ELECTRICALS LTD.
RANIPUR, HARDWAR

	NAME	SIGN	DATE
DRN	POONAM	sd/–	29.11.2011
CHD	DINESH	sd/–	01.12.2011
APPD	D.K.RAY	sd/–	29.07.2012

NO. OF VAR

DEPT STE	SCALE	WEIGHT (KG)	REF. TO ASSY. DRG.	ITEM No.	NO. OF ITEMS
CODE 4011	1:5	536.00 (01)	9–10742–58000	150	——

TITLE : RING

CARD CODE

DRAWING NO. 7 4–10742–58150 22 23 24

SHEET No. 01 | No. OF SHEETS 01

A4 SIZE

FIRST ANGLE PROJECTION (ALL DIMENSIONS ARE IN mm) FORM DG 39(B)

REV	DATE	ALTERED / CHECKED	REV	DATE	ALTERED / CHECKED	~~GMS No.~~/ C.B.O.M.– NO. 9–10742–58000	STATUS OF DRG U
ZONE			ZONE			AGREED DEPT: WT / NAME: H. VERMA / SIGN: sd/– / DATE: 28.07.12	

GRADE OF UNTOL.DIM M/CG. – AA0230208 m | WELDING–CLASS 'B' OF AA0621104 | GAS CUTTING–TABLE 3 OF AA0621101

12.5 ALL OVER EXCEPT OTHERWISE STATED

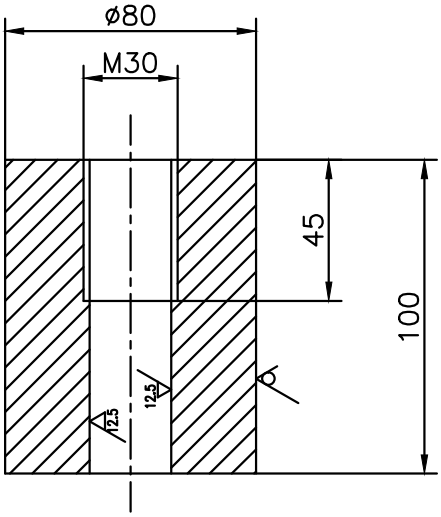

COPYRIGHT AND CONFIDENTIAL
THE INFORMATION ON THIS DOCUMENT IS THE PROPERTY OF BHARAT HEAVY ELECTRICALS LIMITED. IT MUST NOT BE USED DIRECTLY OR INDIRECTLY IN ANY WAY DETERIMENTAL TO THE INTEREST OF THE COMPANY.

TIN NO. PSK046L664

Ref.Drawing No> DSPPG–0127068

Sign & Date

TECHNICAL REQUIREMENT

1. IDENTIFICATION ACCORDING TO HW 0400397

BHARAT HEAVY ELECTRICALS LTD.
RANIPUR, HARDWAR

	NAME	SIGN	DATE
DRN	POONAM	sd/–	28.11.11
CHD	DINESH	sd/–	01.12.11
APPD	D.K.RAY	sd/–	

NO. OF VAR

DEPT STE	SCALE	WEIGHT (KG)	REF. TO ASSY. DRG.	ITEM No.	NO. OF ITEMS
CODE 4011	1:2	3.5	9–10742–58000	148	——

TITLE : **CONNECTION**

CARD CODE

DRAWING NO. 7 4–10742–58148 22 23 24

SHEET No. 01 | No. OF SHEETS 01

Inventory No.

A4 SIZE

FIRST ANGLE PROJECTION (ALL DIMENSIONS ARE IN mm) FORM DG 39(B)

REV	DATE	ALTERED / CHECKED	REV	DATE	ALTERED / CHECKED	~~GMS No.~~/ C.B.O.M.– NO. 9–10742–58000	STATUS OF DRG U
ZONE			ZONE			AGREED DEPT: WT / NAME: H. VERMA / SIGN: SD/– / DATE: 28.07.12	

GRADE OF UNTOL.DIM M/CG. – AA0230208 m | WELDING–CLASS 'B' OF AA0621104 | GAS CUTTING–TABLE 3 OF AA0621101

50/ ALL OVER EXCEPT OTHERWISE STATED

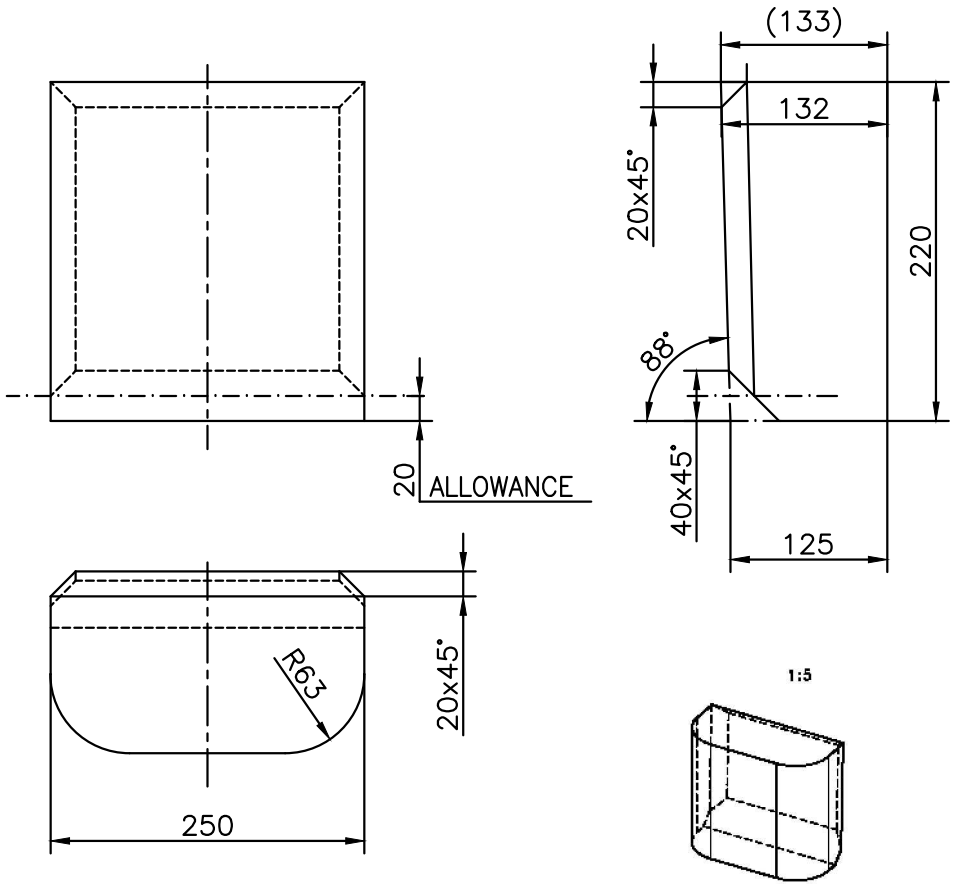

TECHNICAL REQUIREMENT:–

1. IDENTIFICATION ACCORDING TO HW 0400397

COPYRIGHT AND CONFIDENTIAL
THE INFORMATION ON THIS DOCUMENT IS THE PROPERTY OF BHARAT HEAVY ELECTRICALS LIMITED. IT MUST NOT BE USED DIRECTLY OR INDIRECTLY IN ANY WAY DETERIMENTAL TO THE INTEREST OF THE COMPANY.

TIN NO. PSK046L658

Ref.Drawing No> DSPPG–0127032

Sign & Date

Inventory No.

BHARAT HEAVY ELECTRICALS LTD.
RANIPUR, HARDWAR

	NAME	SIGN	DATE
DRN	POONAM	SD/-	28.11.2011
CHD	DINESH	SD/-	01.12.2011
APPD	D.K.RAY	SD/-	

NO. OF VAR

DEPT STE	SCALE	WEIGHT (KG)	REF. TO ASSY. DRG.	ITEM No.	NO. OF ITEMS
CODE 4011	1:5	50.1	9-10742-58000	114 214	——

TITLE : **JOINT FLANGE**

CARD CODE

DRAWING NO. 7 4–10742–58114 22 23 24

SHEET No. 01 | No. OF SHEETS 01

A4 SIZE

FIRST ANGLE PROJECTION | (ALL DIMENSIONS ARE IN mm) | FORM DG 38(B)

DRAWING No. 3-10742-58212

50 ALL OVER EXCEPT OTHERWISE STATED

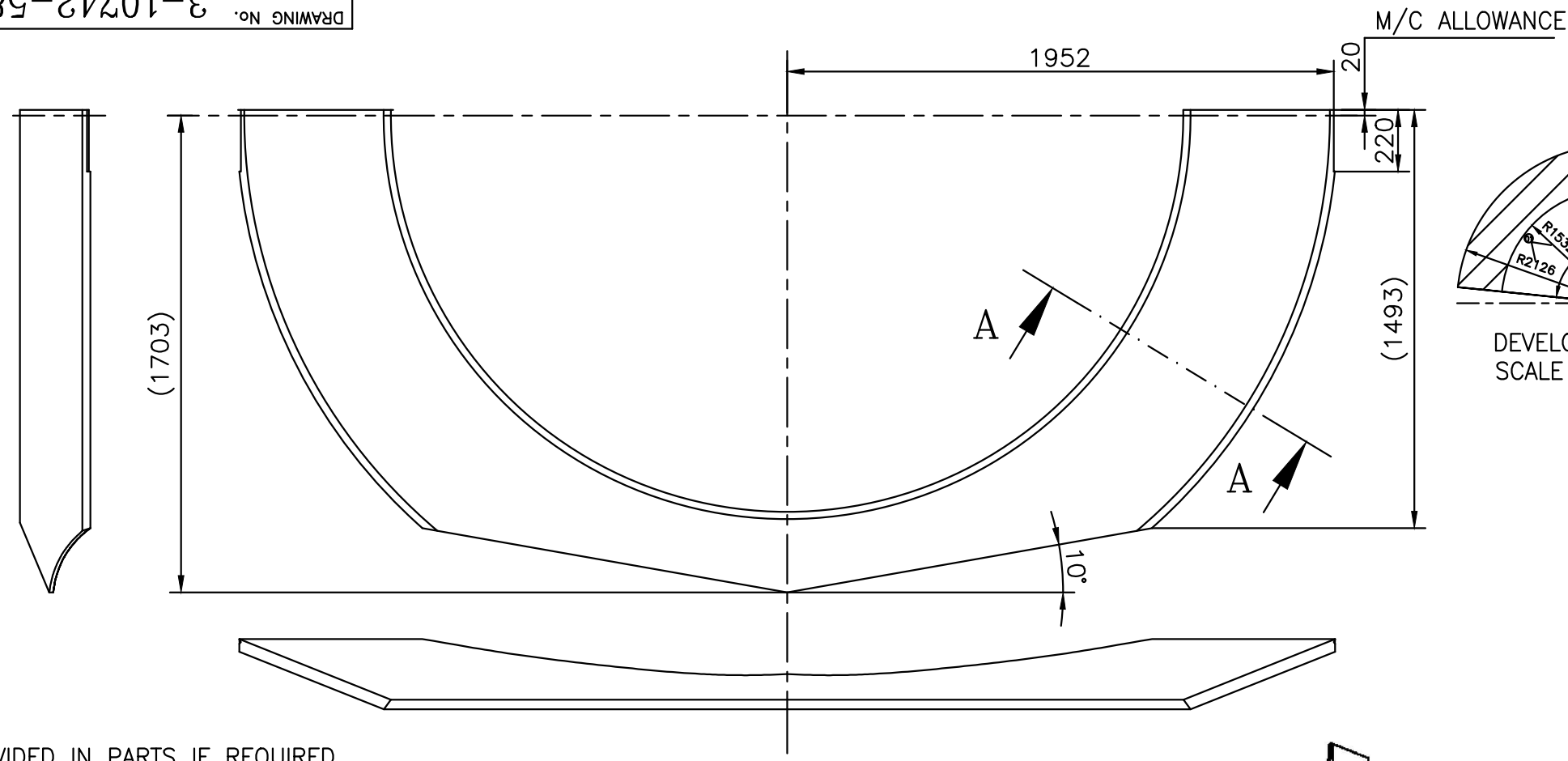

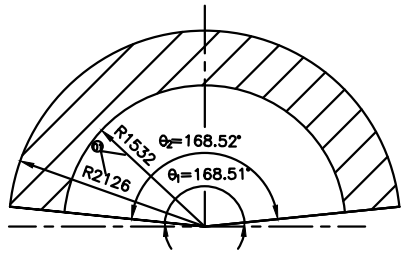

DEVELOPMENT OF CONE
SCALE 1:150

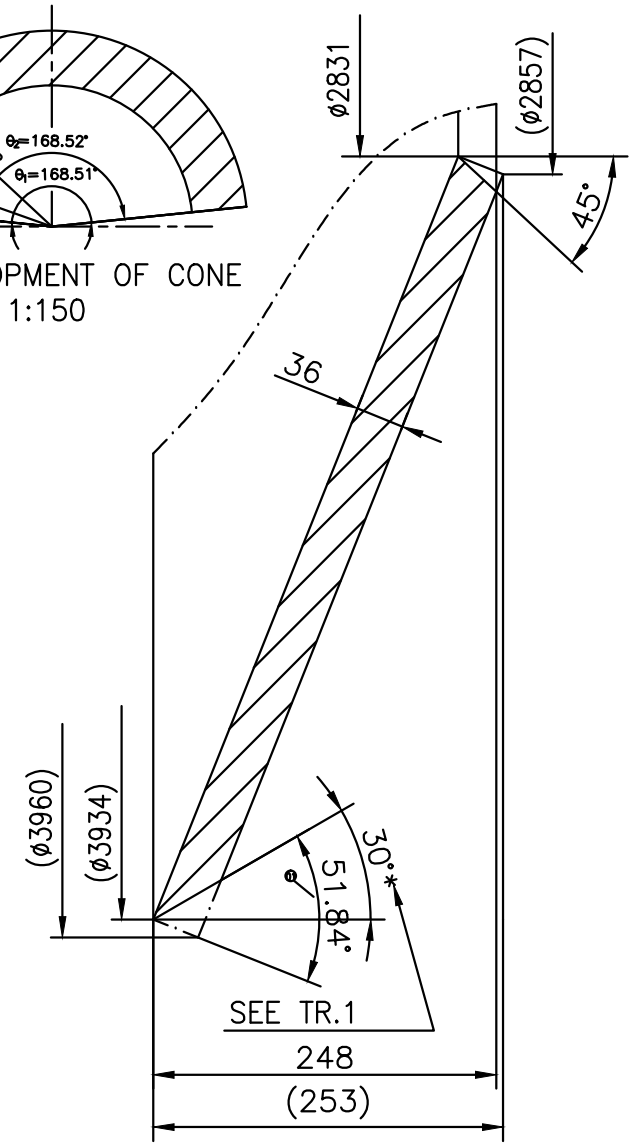

SECTION AA
SCALE 1:5

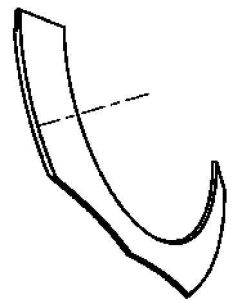

1:40

. DIVIDED IN PARTS IF REQUIRED.
. ADDITIONAL LONGITUDINAL WELD SEAMS SHALL BE MADE AS FULL PENETRATION WELD.
. PERFORMANCE DEPENDING ON WELD PROCEDURE OF SUPPLIER/SHOP.

DETAIL:
FULL PENETRATION WELD

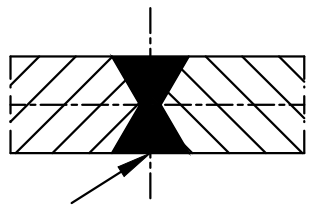

WELD EDGE PREPARATION
ACC. TO ISO 9692-1/ISO 9692-2

TECHNICAL REQUIREMENTS:-

1. "*" IF REQUIRED, THE WELD EDGE PREPARATION COULD BE DONE ACCORDING TO ISO 9692-1.THE DRAWING REQUIREMENTS (E.G. WELD QUALITY, FULL PENETRATION, BUTT WELD,FILLET WELD) MUST BE CONSIDERED.
2. WELD CLASSIFICATION GROUP ACCORDING TO HW0620099:BS/BK.
3. WELDING TEST SCOPE ACCORDING TO HW0850199. CSR-1.
4. IDENTIFICATION ACCORDING TO HW0400397

COPYRIGHT AND CONFIDENTIAL
THE INFORMATION ON THIS DOCUMENT IS THE PROPERTY OF BHARAT HEAVY ELECTRICALS LIMITED. IT MUST NOT BE USED DIRECTLY OR INDIRECTLY IN ANY WAY DETERIMENTAL TO THE INTEREST OF THE COMPANY.

TIN NO. PSK046L673
Ref.Drawing No> DSPPG-0127030
Sign & Date
Inventory No

GRADE OF UNTOL. DIM
M/CG.- AA0230208 m
WELDING-CLASS 'B' OF AA0621104
GAS CUTTING-TABLE 3 OF AA0621101

~~GMS No.~~	C B O M		STATUS OF DRG
9-10742 58000			U
AGREED DEPT	NAME	SIGN	DATE
WT	H. VERMA	Sd/-	28.07.12

TYPE OF PRODUCT OR NAME OF CUSTOMER/PROJECT: STEAM TURBINE

BHARAT HEAVY ELECTRICALS LTD.
RANIPUR, HARDWAR

	NAME	SIGN	DATE
DRN	POONAM	Sd/-	29.11.11
CHD	DINESH	Sd/-	01.12.11
APPD	D.K.RAY	Sd/-	28.07.12

NO. OF VAR 73 74

REV	DATE	ALTERED / CHECKED	REV	DATE	ALTERED / CHECKED	REV	DATE	ALTERED / CHECKED
						01	25.05.13	ALTERED MONIKA / CHECKED DINESH

DATE & NO. OF SHEET UPDATED
INSERT NEW SHEET.
AS PER C\A NO. STE-13-F0205.

DEPT	SCALE	WEIGHT (KG)	REF. TO ASSY. DRG.	ITEM No.	NO. OF ITEMS
STE	1:20	668.00	9-10742-58000	212	75 77
CODE 4011					

TITLE : HALF CONE

CARD CODE

DRAWING NO. 3-10742-58212 7 22 23 24

SHEET No. 1 | No. OF SHEETS 2

SIZE A3

FIRST ANGLE PROJECTION | (ALL DIMENSIONS ARE IN mm) | FORM DG 38(B)

DRAWING No. 3-10742-58157

50 ALL OVER EXCEPT OTHERWISE STATED

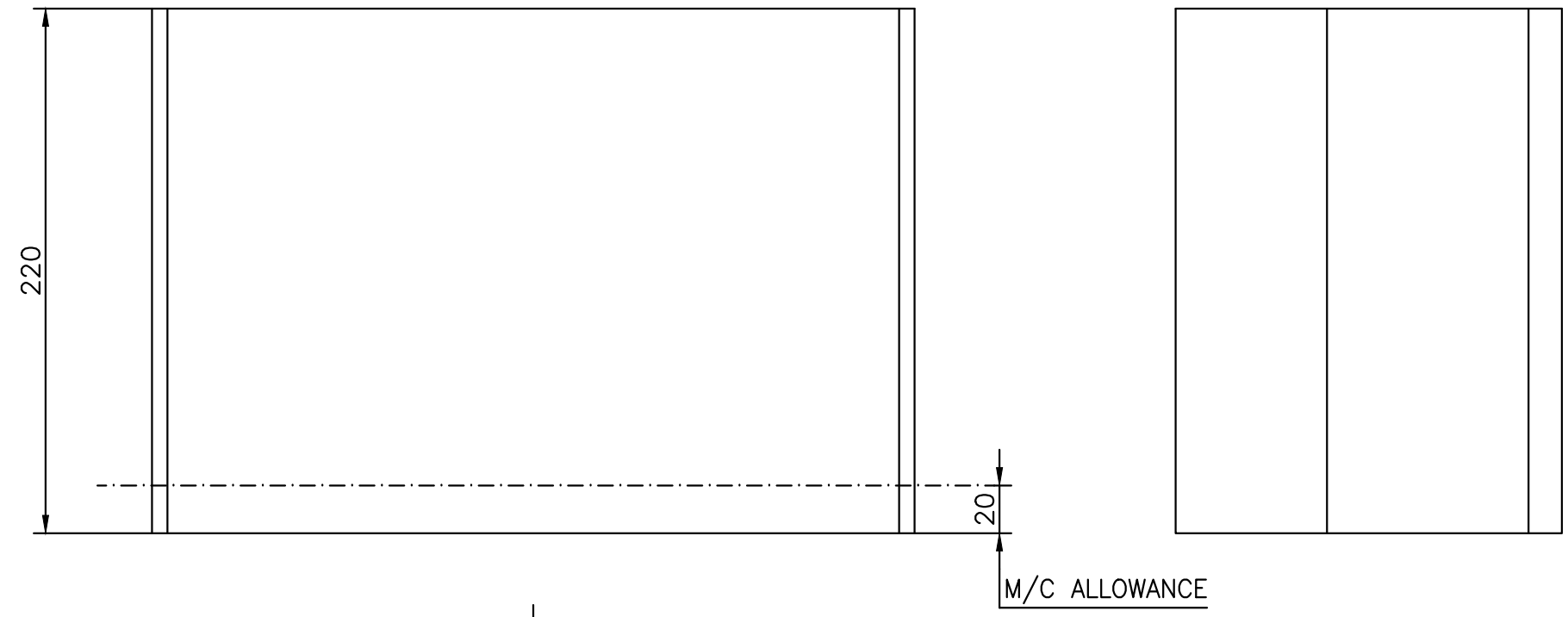

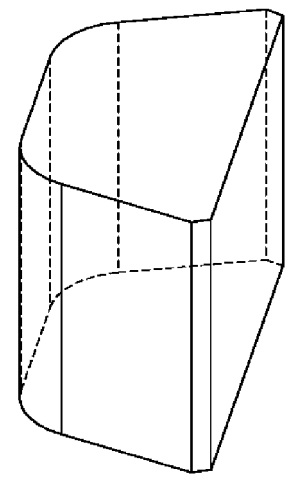

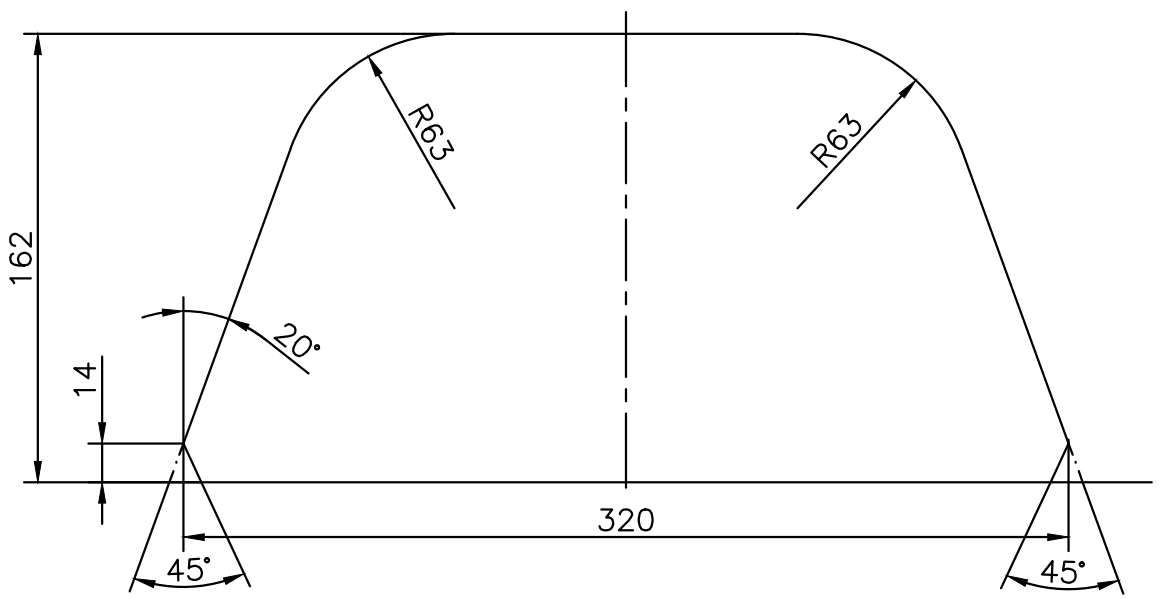

TECHNICAL REQUIREMENT

1. IDENTIFICATION ACCORDING TO HW 0400397

COPYRIGHT AND CONFIDENTIAL

THE INFORMATION ON THIS DOCUMENT IS THE PROPERTY OF BHARAT HEAVY ELECTRICALS LIMITED. IT MUST NOT BE USED DIRECTLY OR INDIRECTLY IN ANY WAY DETERIMENTAL TO THE INTEREST OF THE COMPANY.

TIN NO PSK046L669

Ref.Drawing No> DSPPG-0127062

Sign & Date

Inventory No.

~~GMS No./~~	C B O M 9-10742-58000		STATUS OF DRG U
AGREED DEPT	NAME	SIGN	DATE
WT	H. VERMA	Sd/-	28.07.12

GRADE OF UNTOL. DIM

M/CG.- AA0230208 m

WELDING-CLASS 'B' OF AA0621104

GAS CUTTING-TABLE 3 OF AA0621101

REV	DATE	ALTERED / CHECKED	REV	DATE	ALTERED / CHECKED	REV	DATE	ALTERED / CHECKED
			02	30.01.15	MANOJ / DINESH	01	16.01.13	MONIKA / DINESH
			T.R-2 & MACHNINIG 12.5 DELETED. C\A NO. STE-15-F0034.					AS PER C\A NO. STE-13-F0028

TYPE OF PRODUCT OR NAME OF CUSTOMER/PROJECT: STEAM TURBINE

BHARAT HEAVY ELECTRICALS LTD. RANIPUR, HARDWAR

	NAME	SIGN	DATE
DRN	POONAM	Sd/-	29.11.11
CHD	DINESH	Sd/-	01.11.11
APPD	D.K RAY	Sd/-	

NO. OF VAR 73 74

DEPT STE

CODE 4011

SCALE 1:2.5

WEIGHT (KG) 74.5

REF. TO ASSY. DRG. 9-10742-58000

ITEM No. 157 257

NO. OF ITEMS 75 77

TITLE : JOINT FLANGE

CARD CODE

DRAWING NO. 7 3-10742-58157 22 23 24

SHEET No. 1 | No. OF SHEETS 1

SIZE A3

FIRST ANGLE PROJECTION | (ALL DIMENSIONS ARE IN mm) | FORM DG 38(B)

DRAWING No. 3-10742-58151

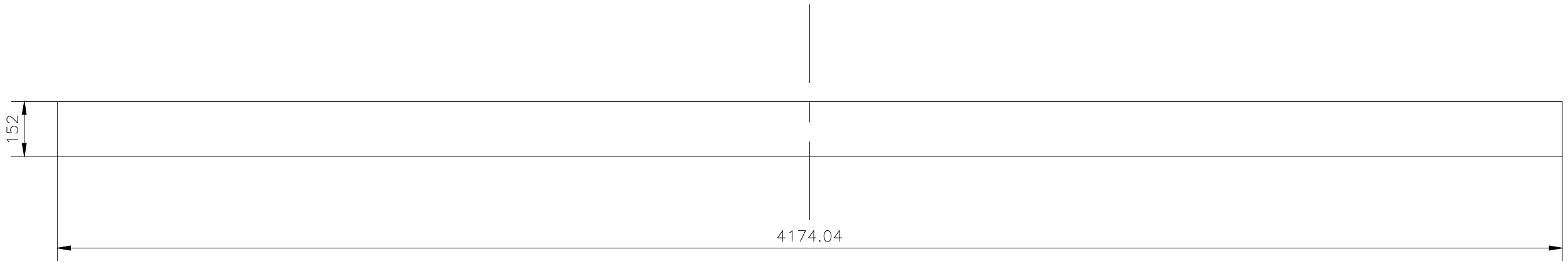

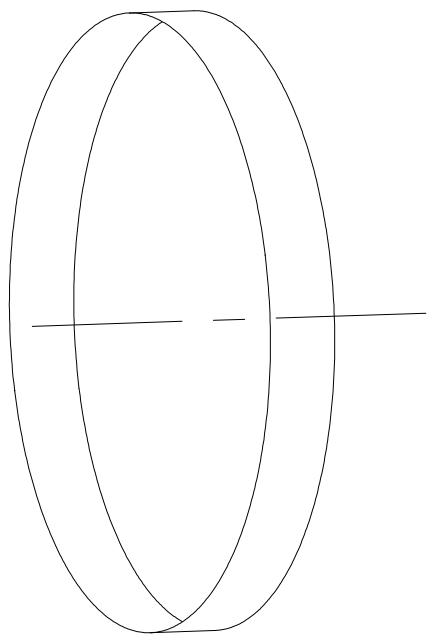

DEVELOPMENT OF PIPE

COPYRIGHT AND CONFIDENTIAL
THE INFORMATION ON THIS DOCUMENT IS THE PROPERTY OF BHARAT HEAVY ELECTRICALS LIMITED. IT MUST NOT BE USED DIRECTLY OR INDIRECTLY IN ANY WAY DETERIMENTAL TO THE INTEREST OF THE COMPANY.

TIN NO. PSK046L667

Ref.Drawing No> DSPPG-127059

Sign & Date

Inventory No.

~~GMS No./~~	C B O M 9-10742-58000		STATUS OF DRG (U)
AGREED DEPT	NAME	SIGN	DATE
WT	H. VERMA	-SD/-	28.07.12

GRADE OF UNTOL.DIM
M/CG.-~~C~~/M/~~F~~ AA0230208
WELDING-~~A~~/B/~~C~~/~~D~~ AA0621104
GAS CUTTING-'T3'AA0621101

REV	DATE	ALTERED / CHECKED	REV	DATE	ALTERED / CHECKED	REV	DATE	ALTERED / CHECKED

TYPE OF PRODUCT OR NAME OF CUSTOMER/PROJECT: STEAM TURBINE

BHARAT HEAVY ELECTRICALS LTD.
RANIPUR, HARDWAR

	NAME	SIGN	DATE
DRN	AFZAL KHAN	-SD/-	02.08.2012
CHD	DINESH	-SD/-	03.08.2012
APPD	D.K.RAY	-SD/-	

NO. OF VAR — (73 74)

DEPT STE
CODE 4011

SCALE 1:12

WEIGHT (KG) 148.0

REF. TO ASSY. DRG. 9-10742-58000

ITEM No. 231

NO. OF ITEMS — (75 77)

TITLE : PIPE

CARD CODE

DRAWING NO. 3-10742-58151 (7 22 23 24)

SHEET No. 02 | No. OF SHEETS 02

SIZE A3

FIRST ANGLE PROJECTION | (ALL DIMENSIONS ARE IN mm) | FORM DG 38(B)

DRAWING No. 3-10742-58151

50 ALL OVER EXCEPT OTHERWISE STATED

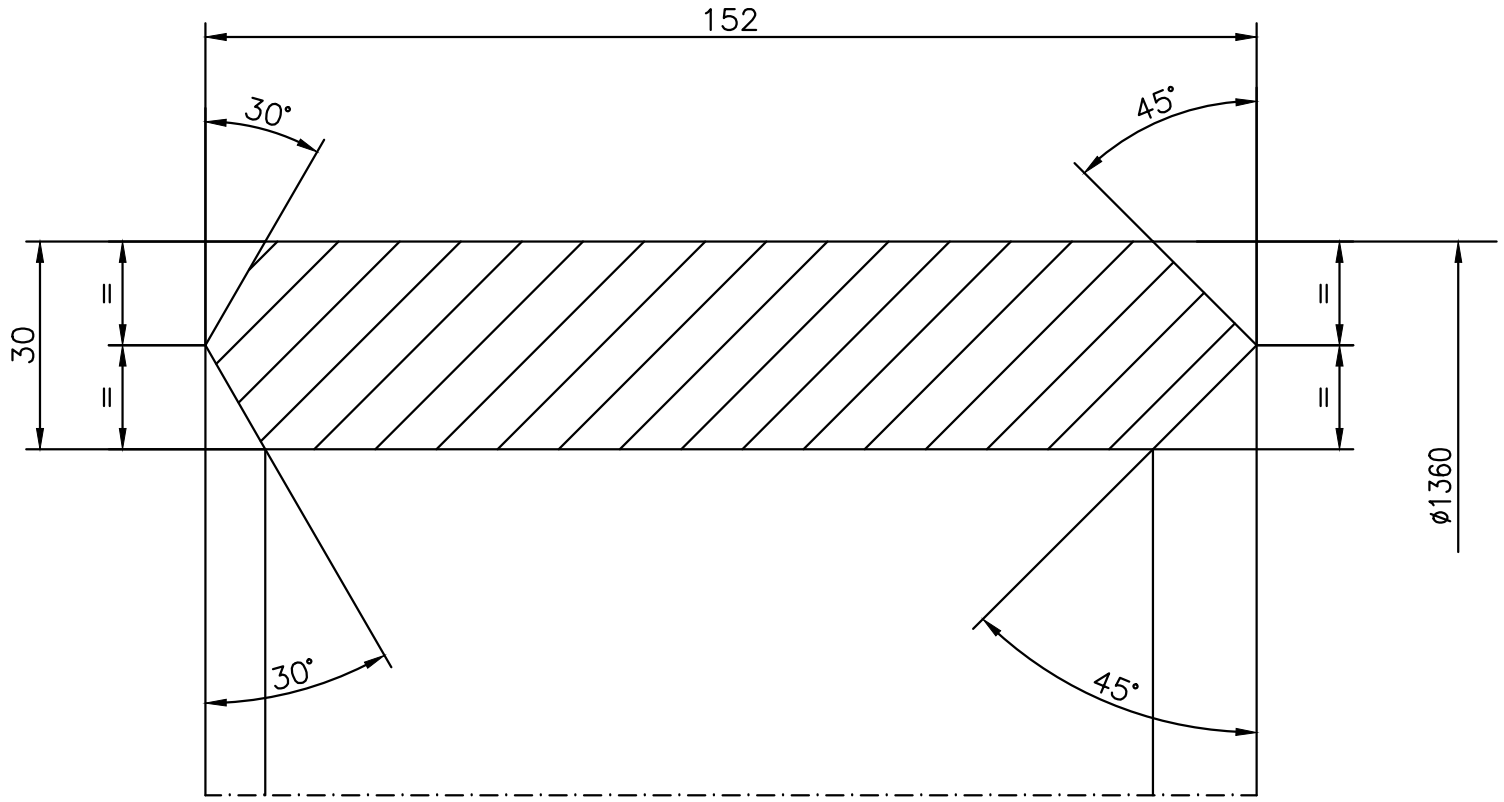

DIVIDED IN PARTS IF REQUIRED.
ADDITIONAL LONGITUDINAL WELD SEAMS SHALL BE MADE AS FULL PENETRATION WELD.
PERFORMANCE DEPENDING ON WELD PROCEDURE OF SUPPLIER/SHOP.

DETAIL: FULL PENETRATION WELD

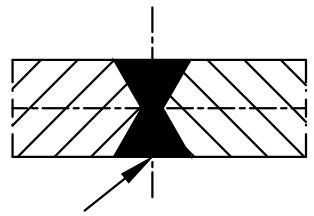

WELD EDGE PREPARTION
ACC. TO ISO 9692-1/ISO 9692-2

TECHNICAL REQUIREMENTS:-

1. WELD CLASSIFICATION GROUP ACCORDING TO HW0620099:BS/BK.
2. WELDING TEST SCOPE ACCORDING TO HW0850199. CSR-1.
3. IDENTIFICATION ACCORDING TO HW0400397

COPYRIGHT AND CONFIDENTIAL
THE INFORMATION ON THIS DOCUMENT IS THE PROPERTY OF BHARAT HEAVY ELECTRICALS LIMITED. IT MUST NOT BE USED DIRECTLY OR INDIRECTLY IN ANY WAY DETERIMENTAL TO THE INTEREST OF THE COMPANY.

TIN NO. PSK046L667
Ref.Drawing No> DSPPG-0127059
Sign & Date
Inventory No.

~~GMS No./~~	C B O M 9-10742-58000		STATUS OF DRG U
AGREED DEPT	NAME	SIGN	DATE
WT	H. VERMA	Sd/-	28.07.12

GRADE OF UNTOL. DIM
M/CG.- AA0230208 m
WELDING-CLASS 'B' OF AA0621104
GAS CUTTING-TABLE 3 OF AA0621101

REV	DATE	ALTERED / CHECKED	REV	DATE	ALTERED / CHECKED	REV	DATE	ALTERED / CHECKED

TYPE OF PRODUCT OR NAME OF CUSTOMER/PROJECT: **STEAM TURBINE**

BHARAT HEAVY ELECTRICALS LTD.
RANIPUR, HARDWAR

	NAME	SIGN	DATE
DRN	POONAM	Sd/-	29.11.11
CHD	DINESH	Sd/-	01.12.11
APPD	D.K.RAY	Sd/-	

NO. OF VAR 73 74

DEPT STE	SCALE	WEIGHT (KG)	REF. TO ASSY. DRG.	ITEM No.	NO. OF ITEMS
CODE 4011	1:1	148.00	9-10742-58000	151	75 77

TITLE : **PIPE**

CARD CODE

DRAWING NO. 7 3-10742-58151 22 23 24

SHEET No. 1 | No. OF SHEETS 2

SIZE A3

FIRST ANGLE PROJECTION | (ALL DIMENSIONS ARE IN mm) | FORM DG 38(B)

DRAWING No. 3-10742-58125

50 ALL OVER EXCEPT OTHERWISE STATED

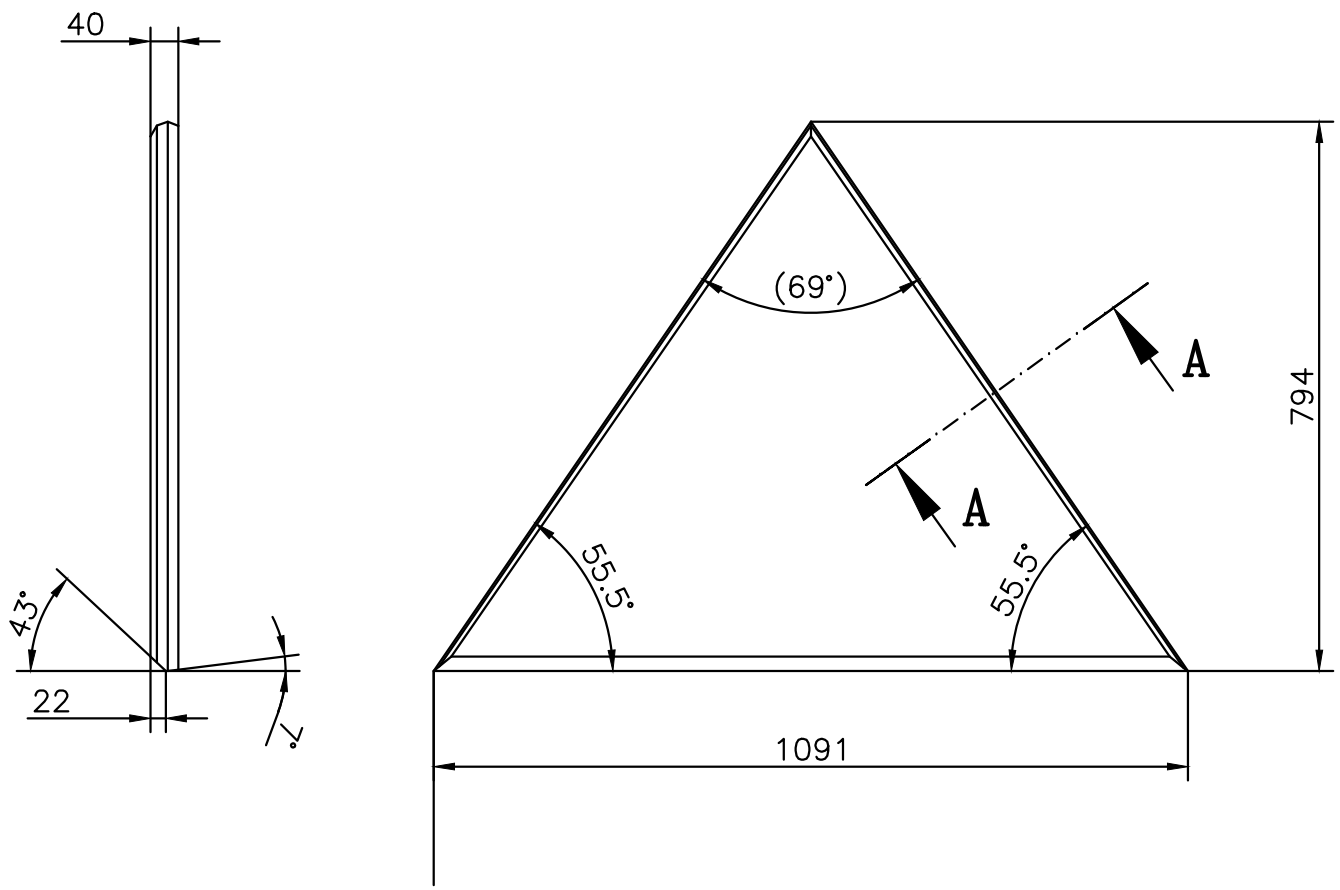

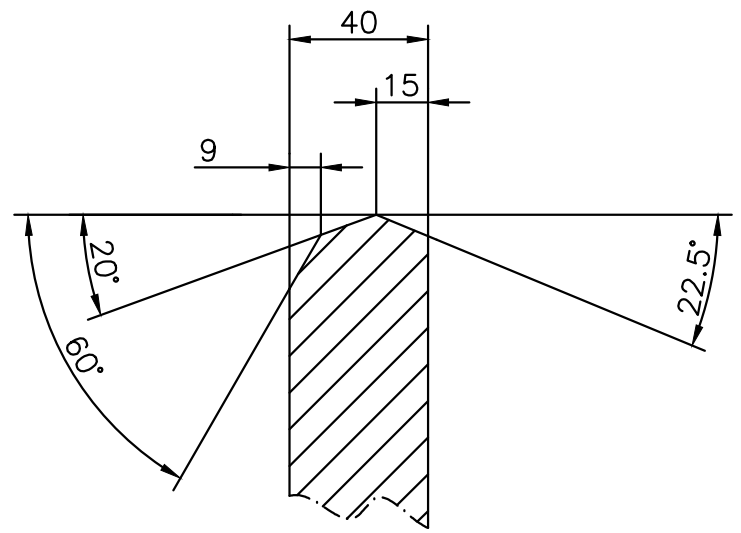

SECTION AA
SCALE 1:2

TECHNICAL REQUIREMENT:-

1. IDENTIFICATION ACCORDING TO HW 0400397.

COPYRIGHT AND CONFIDENTIAL
THE INFORMATION ON THIS DOCUMENT IS THE PROPERTY OF BHARAT HEAVY ELECTRICALS LIMITED. IT MUST NOT BE USED DIRECTLY OR INDIRECTLY IN ANY WAY DETERIMENTAL TO THE INTEREST OF THE COMPANY.

TIN NO. PSK046L663

Ref.Drawing No> DSPPG-0127045

Sign & Date

Inventory No

~~GMS No./~~	C B O M 9-10742-58000		STATUS OF DRG U
AGREED DEPT	NAME	SIGN	DATE
WT	H. VERMA	Sd/-	28.07.12

GRADE OF UNTOL. DIM
M/CG.- AA0230208 m
WELDING-CLASS 'B' OF AA0621104
GAS CUTTING-TABLE 3 OF AA0621101

REV	DATE	ALTERED / CHECKED	REV	DATE	ALTERED / CHECKED	REV	DATE	ALTERED / CHECKED

TYPE OF PRODUCT OR NAME OF CUSTOMER/PROJECT: **STEAM TURBINE**

BHARAT HEAVY ELECTRICALS LTD.
RANIPUR, HARDWAR

	NAME	SIGN	DATE
DRN	POONAM	Sd/-	28.11.11
CHD	DINESH	Sd/-	01.12.11
APPD	D.K.RAY	Sd/-	

NO. OF VAR 73 74

DEPT STE	SCALE	WEIGHT (KG)	REF. TO ASSY. DRG.	ITEM No.	NO. OF ITEMS
CODE 4011	1:10	131.00	9-10742-58000	125	75 77

TITLE : **PLATE**

CARD CODE

DRAWING NO. 7 3-10742-58125 22 23 24

SHEET No. 1 | No. OF SHEETS 1

SIZE A3

FIRST ANGLE PROJECTION | (ALL DIMENSIONS ARE IN mm) | FORM DG 38(B)

DRAWING No. 3-10742-58124

50/ ALL OVER EXCEPT OTHERWISE STATED

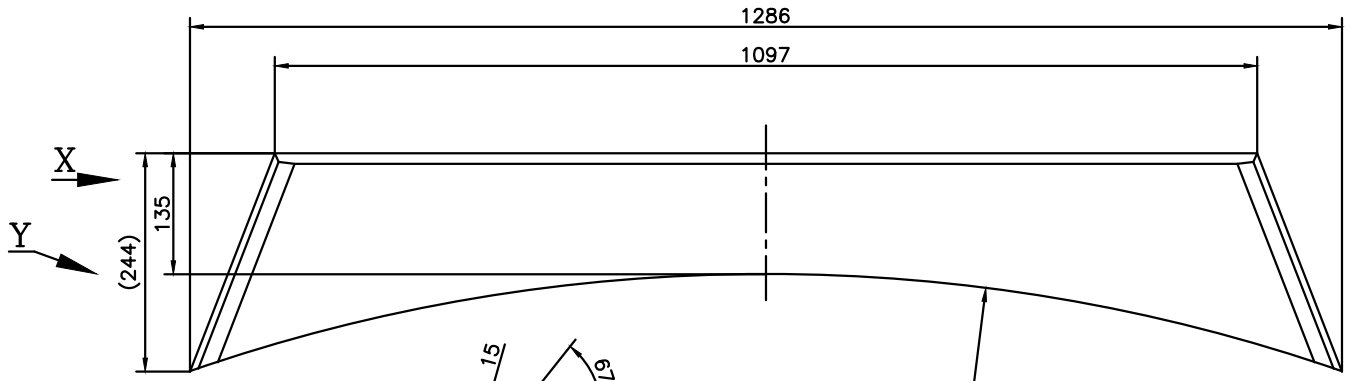

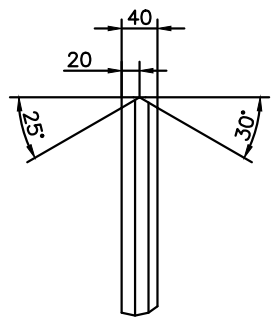

VIEW X

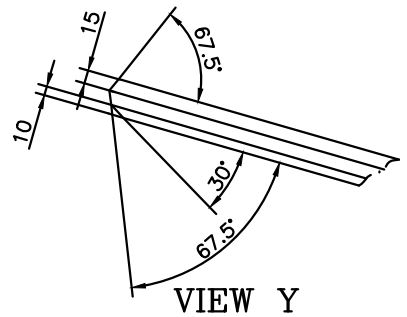

VIEW Y

DIVIDED IN PARTS IF REQUIRED, ADDITIONAL LONGITUDINAL WELD SEAMS SHALL BE MADE AS FULL PENETRATION WELDS, PERFORMANCE DEPENDING ON WELD PROCEDURE OF SUPPLIER/SHOP.

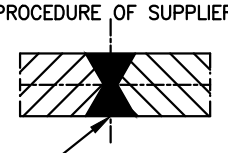

DETAIL: FULL PENETRATION WELD
WELD EDGE PREPARATION
ACC. TO ISO 9692-1/ISO 9692-2

TECHNICAL REQUIREMENTS:-

1. WELD CLASSIFICATION GROUP ACCORDING TO HW0620099:BS/BK.
2. WELDING TEST SCOPE ACCORDING TO HW0850199. CSR-1.
3. IDENTIFICATION ACCORDING TO HW0400397

~~GMS No./~~ C B O M 9-10742-58000			STATUS OF DRG
AGREED DEPT	NAME	SIGN	DATE
WT	H. VERMA	Sd/-	28.07.12

GRADE OF UNTOL. DIM
M/CG.- AA0230208 m
WELDING-CLASS 'B' OF AA0621104
GAS CUTTING-TABLE 3 OF AA0621101

TYPE OF PRODUCT STEAM TURBINE
OR
NAME OF CUSTOMER/PROJECT

BHARAT HEAVY ELECTRICALS LTD.
RANIPUR, HARDWAR

	NAME	SIGN	DATE
DRN	POONAM	Sd/-	28.11.11
CHD	DINESH	Sd/-	01.12.11
APPD	D.K.RAY	Sd/-	

NO. OF VAR 73 74

REV	DATE	ALTERED	REV	DATE	ALTERED	REV	DATE	ALTERED MONIKA
		CHECKED			CHECKED	01	16.01.13	CHECKED DINESH

AS PER C\A NO. STE-13-F0028

DEPT STE	SCALE	WEIGHT (KG)	REF. TO ASSY. DRG.	ITEM No.	NO. OF ITEMS
CODE 4011	1:5	59.0	9-10742-58000	124	75 77

TITLE : PLATE

CARD CODE

DRAWING NO. 3-10742-58124 (7, 22, 23, 24)

SHEET No. 1 | No. OF SHEETS 1

SIZE A3

Sign & Date | Ref.Drawing No> DSPPG-0127044 | TIN NO PSK046L662 | Inventory No.

COPYRIGHT AND CONFIDENTIAL
THE INFORMATION ON THIS DOCUMENT IS THE PROPERTY OF BHARAT HEAVY ELECTRICALS LIMITED. IT MUST NOT BE USED DIRECTLY OR INDIRECTLY IN ANY WAY DETERIMENTAL TO THE INTEREST OF THE COMPANY.

FIRST ANGLE PROJECTION | (ALL DIMENSIONS ARE IN mm) | FORM DG 38(B)

DRAWING No. 3-10742-58108

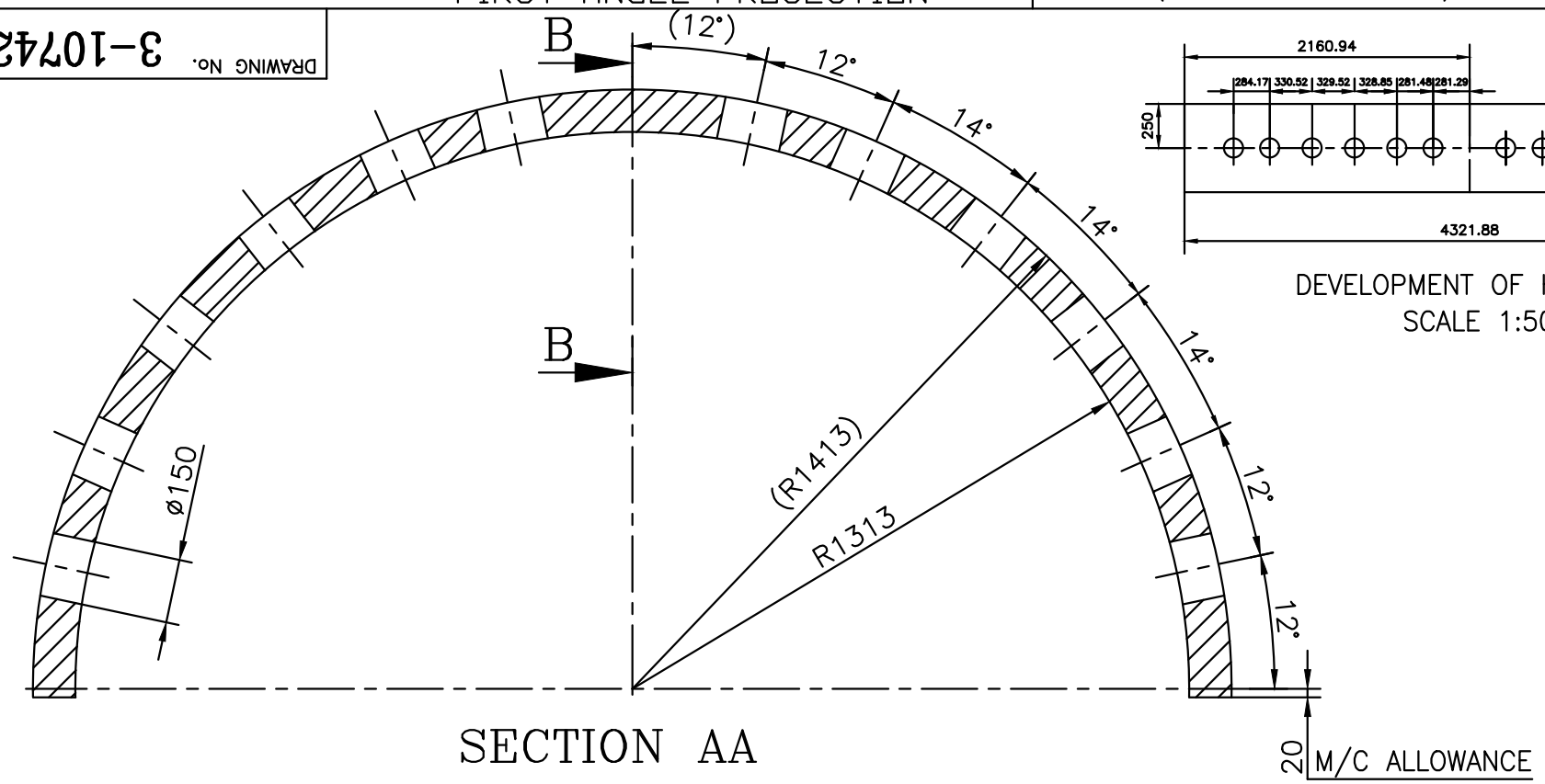

SECTION AA

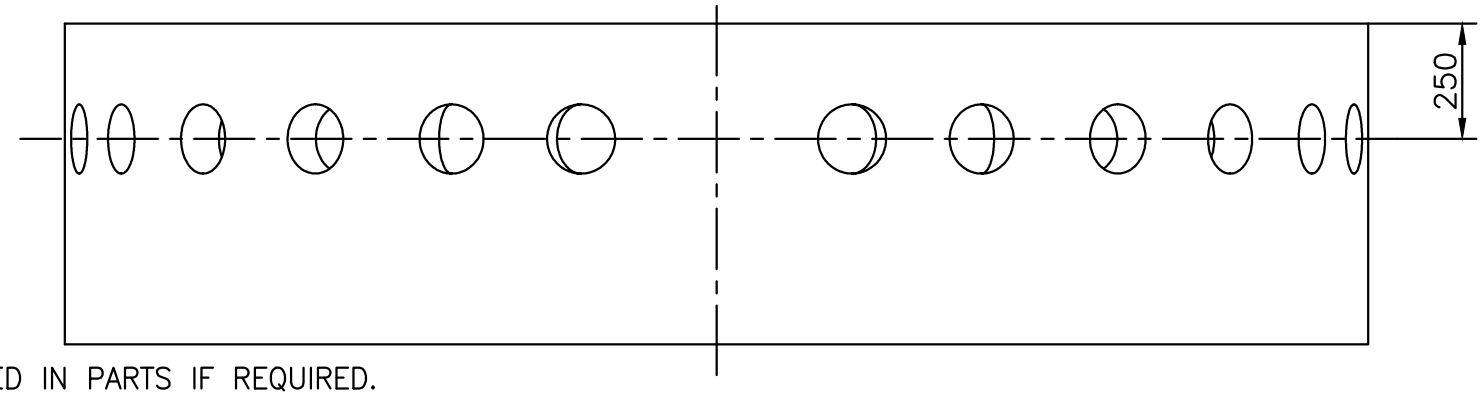

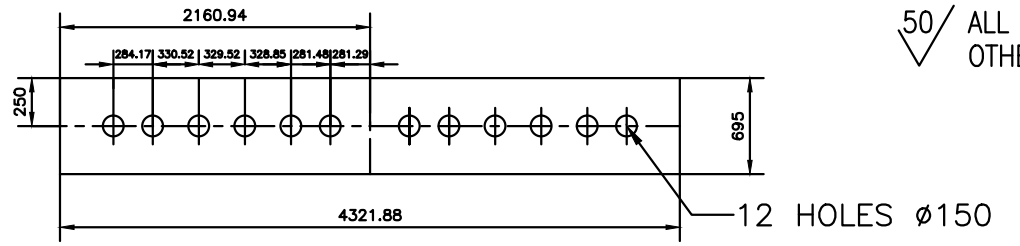

DEVELOPMENT OF HALF RING
SCALE 1:50

50 ALL OVER EXCEPT OTHERWISE STATED

CHECK AGAINST LAMINATION DEFECT

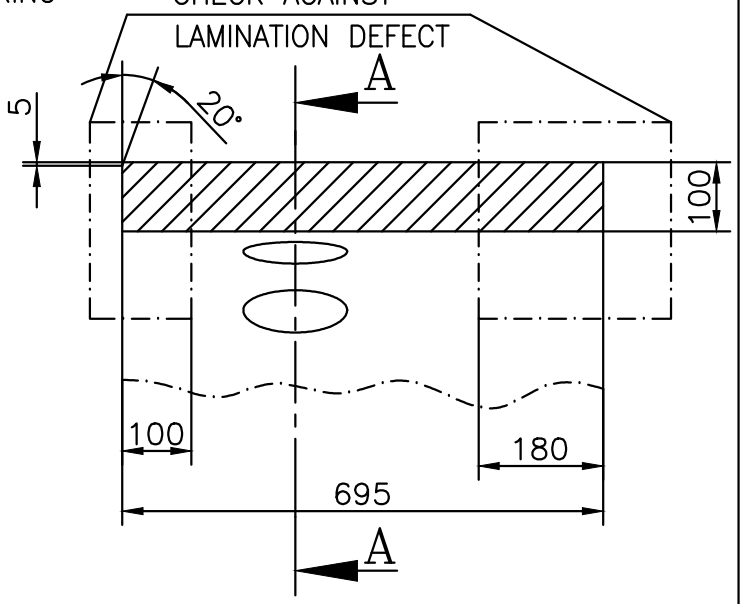

SECTION BB
SCALE 1:10

1:40

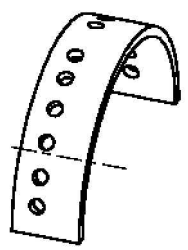

DETAIL: FULL PENETRATION WELD

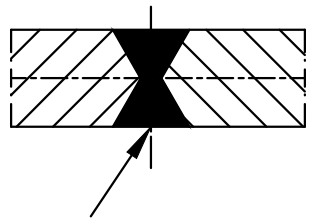

WELD EDGE PREPARATION
ACC. TO ISO 9692-1/ISO 9692-2

DIVIDED IN PARTS IF REQUIRED.
ADDITIONAL LONGITUDINAL WELD SEAMS SHALL BE MADE AS FULL PENETRATION WELD.
PERFORMANCE DEPENDING ON WELD PROCEDURE OF SUPPLIER/SHOP.

TECHNICAL REQUIREMENTS:-

1. WELD CLASSIFICATION GROUP ACCORDING TO HW0620099:BS/BK.
2. WELDING TEST SCOPE ACCORDING TO HW0850199. CSR-1.
3. IDENTIFICATION ACCORDING TO HW0400397

~~GMS No./~~	C B O M 9-10742-58000		STATUS OF DRG
AGREED DEPT	NAME	SIGN	DATE
WT	H. VERMA	Sd/-	28.07.12

GRADE OF UNTOL. DIM
M/CG.- AA0230208 m
WELDING-CLASS 'B' OF AA0621104
GAS CUTTING-TABLE 3 OF AA0621101

REV	DATE	ALTERED / CHECKED	REV	DATE	ALTERED / CHECKED	REV	DATE	ALTERED / CHECKED

TYPE OF PRODUCT OR NAME OF CUSTOMER/PROJECT: **STEAM TURBINE**

BHARAT HEAVY ELECTRICALS LTD.
RANIPUR, HARDWAR

	NAME	SIGN	DATE
DRN	POONAM	SD/-	28.11.2011
CHD	DINESH	SD/-	01.12.2011
APPD	D.K.RAY	SD/-	

NO. OF VAR 73 74

DEPT STE	SCALE	WEIGHT (KG)	REF. TO ASSY. DRG.	ITEM No.	NO. OF ITEMS
CODE 4011	1:15	2190.00	9-10742-58000	108 208	75 77

TITLE : **HALF RING**

CARD CODE

DRAWING NO. 3-10742-58108 7 22 23 24

SHEET No. 1 | No. OF SHEETS 1

SIZE A3

Ref.Drawing No> DSPPG-0127023 | TIN NO. PSK046L654 | Sign & Date | Inventory No.

COPYRIGHT AND CONFIDENTIAL
THE INFORMATION ON THIS DOCUMENT IS THE PROPERTY OF BHARAT HEAVY ELECTRICALS LIMITED. IT MUST NOT BE USED DIRECTLY OR INDIRECTLY IN ANY WAY DETERIMENTAL TO THE INTEREST OF THE COMPANY.

FIRST ANGLE PROJECTION | (ALL DIMENSIONS ARE IN mm) | FORM DG 38(B)

DRAWING No. 3-10742-58105

50 ALL OVER EXCEPT OTHERWISE STATED

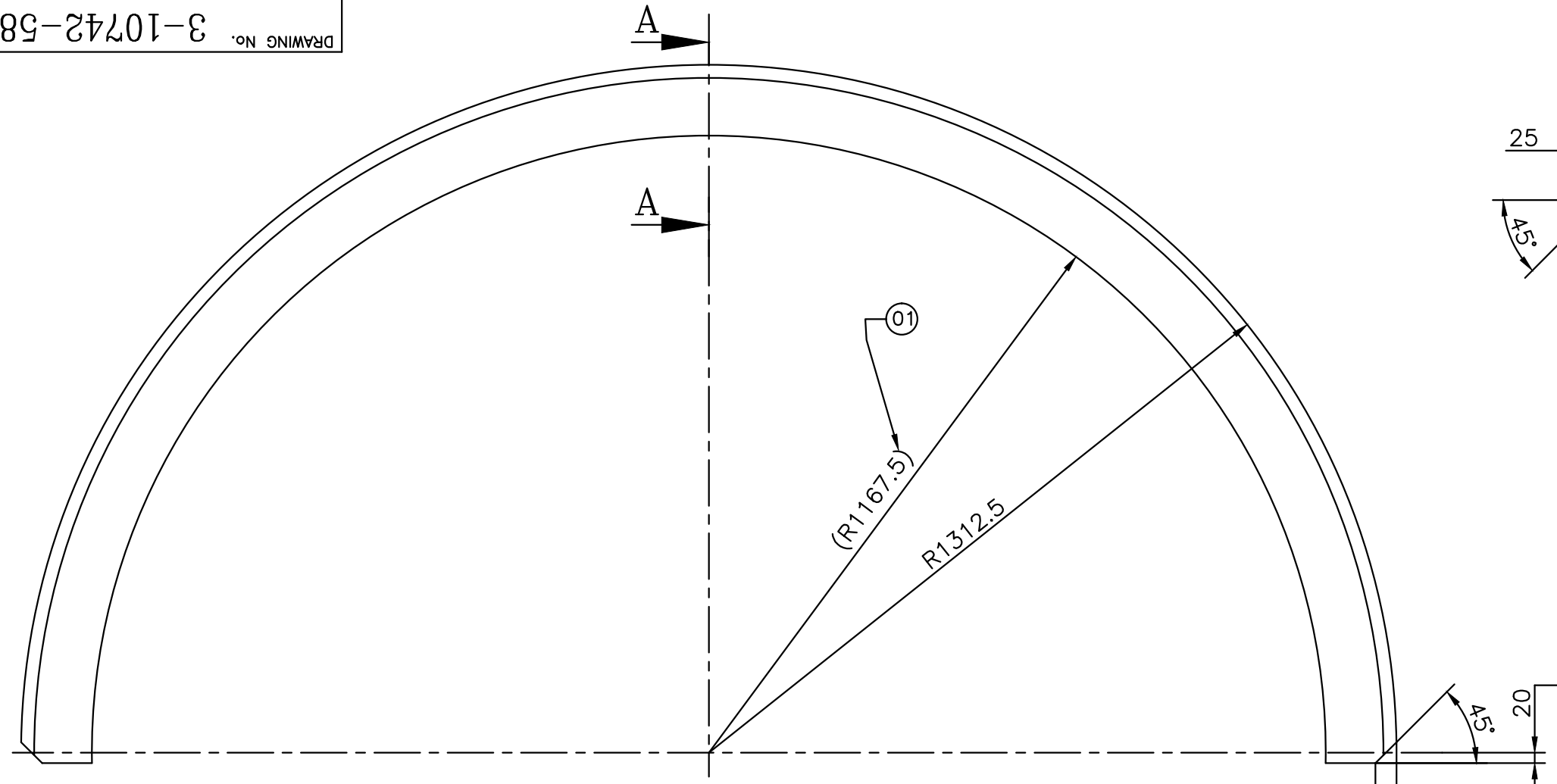

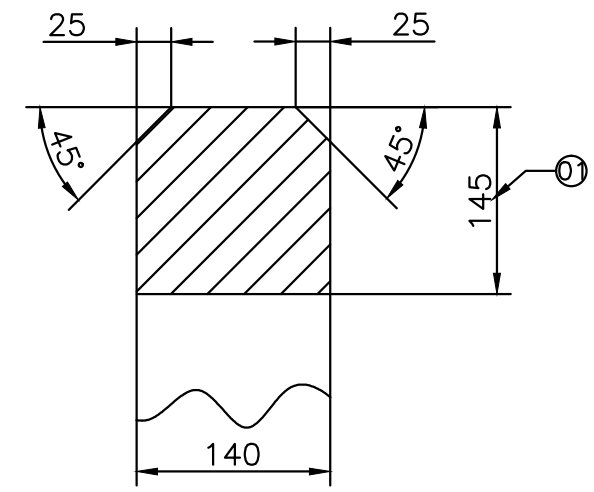

SECTION AA
SCALE 1:5

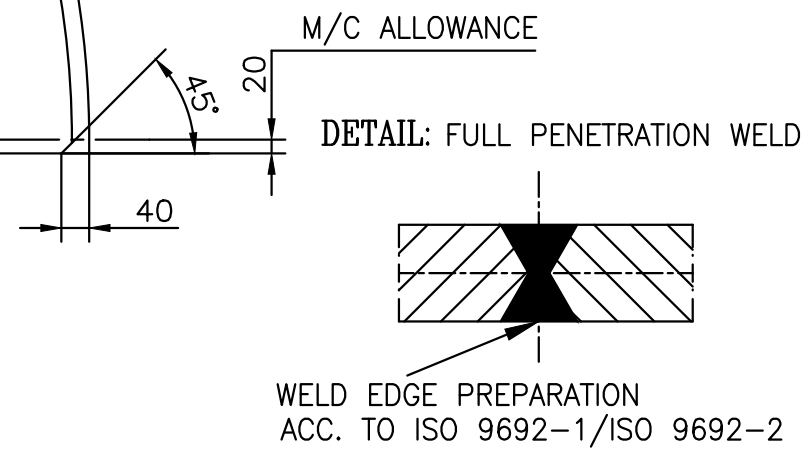

DIVIDED IN PARTS IF REQUIRED.
ADDITIONAL LONGITUDINAL WELD SEAMS SHALL BE MADE AS FULL PENETRATION WELD.
PERFORMANCE DEPENDING ON WELD PROCEDURE OF SUPPLIER/SHOP.

TECHNICAL REQUIREMENTS:-

1. WELD CLASSIFICATION GROUP ACCORDING TO HW0620099:BS/BK.
2. WELDING TEST SCOPE ACCORDING TO HW0850199. CSR-1.
3. IDENTIFICATION ACCORDING TO HW0400397

COPYRIGHT AND CONFIDENTIAL
THE INFORMATION ON THIS DOCUMENT IS THE PROPERTY OF BHARAT HEAVY ELECTRICALS LIMITED. IT MUST NOT BE USED DIRECTLY OR INDIRECTLY IN ANY WAY DETERIMENTAL TO THE INTEREST OF THE COMPANY.

TIN NO. PSK046L653
Ref.Drawing No. DSPPG-0127021
Sign & Date
Inventory No.

~~GMS No./~~	C B O M 9-10742-58000		STATUS OF DRG U
AGREED DEPT	NAME	SIGN	DATE
WT	H. VERMA	SD/-	28.07.12

GRADE OF UNTOL. DIM
M/CG.- AA0230208 m
WELDING-CLASS 'B' OF AA0621104
GAS CUTTING-TABLE 3 OF AA0621101

REV	DATE	ALTERED / CHECKED	REV	DATE	ALTERED / CHECKED	REV	DATE	ALTERED / CHECKED
						01	17.01.14	ANOOP / DINESH

IN MAIN VIEW RADIUS R1177.5 CHANGED TO R1167.5 & IN SECTION AA DIMENSION 135 CHANGED TO 145.
AS PER C\A NO. STE-14-F0024.

TYPE OF PRODUCT OR NAME OF CUSTOMER/PROJECT: STEAM TURBINE

BHARAT HEAVY ELECTRICALS LTD.
RANIPUR, HARDWAR

	NAME	SIGN	DATE
DRN	POONAM	SD/-	28.11.2011
CHD	DINESH	SD/-	01.12.2011
APPD	D.K.RAY	SD/-	28.07.2012

NO. OF VAR 73 74

DEPT STE	SCALE	WEIGHT (KG)	REF. TO ASSY. DRG.	ITEM No. 105 205	NO. OF ITEMS 75 77
CODE 4011	1:10	564.00	9-10742-58000		

TITLE : HALF RING

CARD CODE

DRAWING NO. 7 3-10742-58105 22 23 24

SHEET No. 1 | No. OF SHEETS 1

SIZE A3

FIRST ANGLE PROJECTION | (ALL DIMENSIONS ARE IN mm) | FORM DG 38(B)

DRAWING No. 3-10742-58102

12.5 ALL OVER EXCEPT OTHERWISE STATED

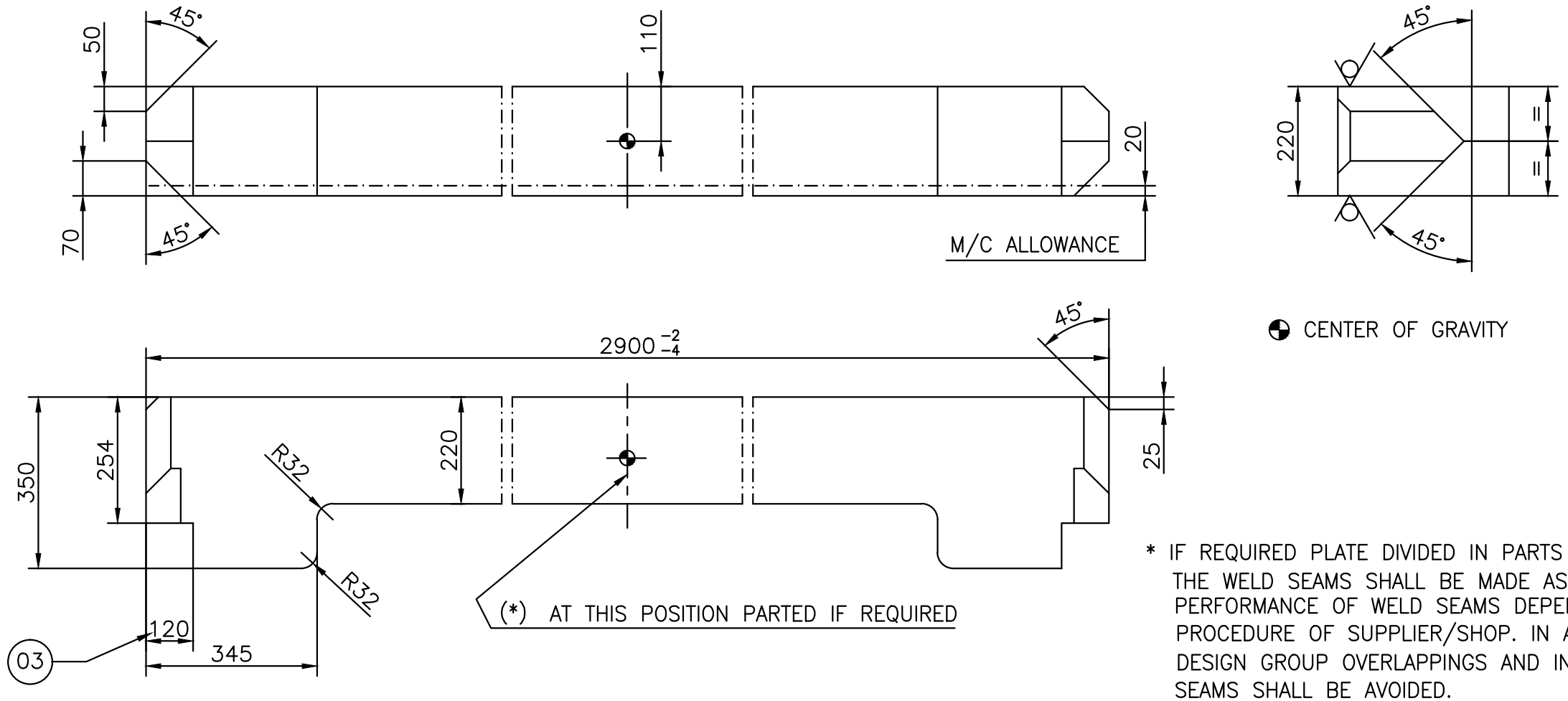

* IF REQUIRED PLATE DIVIDED IN PARTS AT MARKED PLACE. THE WELD SEAMS SHALL BE MADE AS FULL-PENETRATION WELDS. PERFORMANCE OF WELD SEAMS DEPENDING ON WELD PROCEDURE OF SUPPLIER/SHOP. IN ACC. TO MAIN DRAWING OF DESIGN GROUP OVERLAPPINGS AND INTERSECTIONS OF WELD SEAMS SHALL BE AVOIDED.

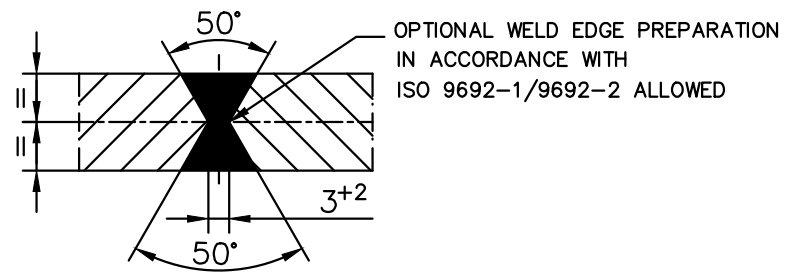

FULL PENETRATION WELD

TECHNICAL REQUIREMENTS:-

1. WELD CLASSIFICATION GROUP ACCORDING TO HW0620099:BS/BK.
2. WELDING TEST SCOPE ACCORDING TO HW0850199. CSR-1.
3. IDENTIFICATION ACCORDING TO HW0400397

COPYRIGHT AND CONFIDENTIAL

THE INFORMATION ON THIS DOCUMENT IS THE PROPERTY OF BHARAT HEAVY ELECTRICALS LIMITED. IT MUST NOT BE USED DIRECTLY OR INDIRECTLY IN ANY WAY DETERIMENTAL TO THE INTEREST OF THE COMPANY.

TIN NO. PSK046L649

Ref.Drawing No> DSPPG-0127018

Sign & Date

Inventory No

~~GMS No./~~	C B O M 0-10741-58500		STATUS OF DRG U
AGREED DEPT	NAME	SIGN	DATE
WT	H. VERMA	Sd/-	28.07.12

GRADE OF UNTOL. DIM
M/CG.- AA0230208 m
WELDING-CLASS 'B' OF AA0621104
GAS CUTTING-TABLE 3 OF AA0621101

TYPE OF PRODUCT OR NAME OF CUSTOMER/PROJECT: STEAM TURBINE

BHARAT HEAVY ELECTRICALS LTD. RANIPUR, HARDWAR

	NAME	SIGN	DATE
DRN	POONAM	Sd/-	28.11.11
CHD	DINESH	Sd/-	01.12.11
APPD	D.K.RAY	Sd/-	29.07.12

NO. OF VAR 00,01 (73 74)

REV	DATE	ALTERED / CHECKED	REV	DATE	ALTERED / CHECKED	REV	DATE	ALTERED / CHECKED
03	21.09.17	ALTERED ANOOP / CHECKED DINESH	02	31.12.16	ALTERED SD/-MANOJ / CHECKED SD/-DINESH	01	23.7.15	ALTERED MANOJ / CHECKED DINESH
TOP VIEW DIMENSION 270mm, DIMENSION 95mm DIMENSION 110mm TO DELETED & DIM.120 ADDED. AS PER C/A NO. STE-17-F0230.			DIM 345 CHANGED TO DIM 350MM DIM 215 CHANGED TO DIM 220MM C/A NO.STE-16-F0412			WEIGHT 1181KG SHOWN. C/A NO.STE-15-F0245		

DEPT STE
CODE 4011

SCALE 1:10

WEIGHT (KG) 1181 (01)

REF. TO ASSY. DRG. 0-10741-58500

ITEM No. 102 202

NO. OF ITEMS (75 77)

TITLE : JOINT FLANGE

CARD CODE

DRAWING NO. 3-10742-58102 (7 22)

(23 24)

SHEET No. 1 | No. OF SHEETS 1

SIZE A3

FIRST ANGLE PROJECTION (ALL DIMENSIONS ARE IN mm) FORM DG 44(B)

DRAWING No. 2-10742-58235

50 ALL OVER EXCEPT OTHERWISE STATED

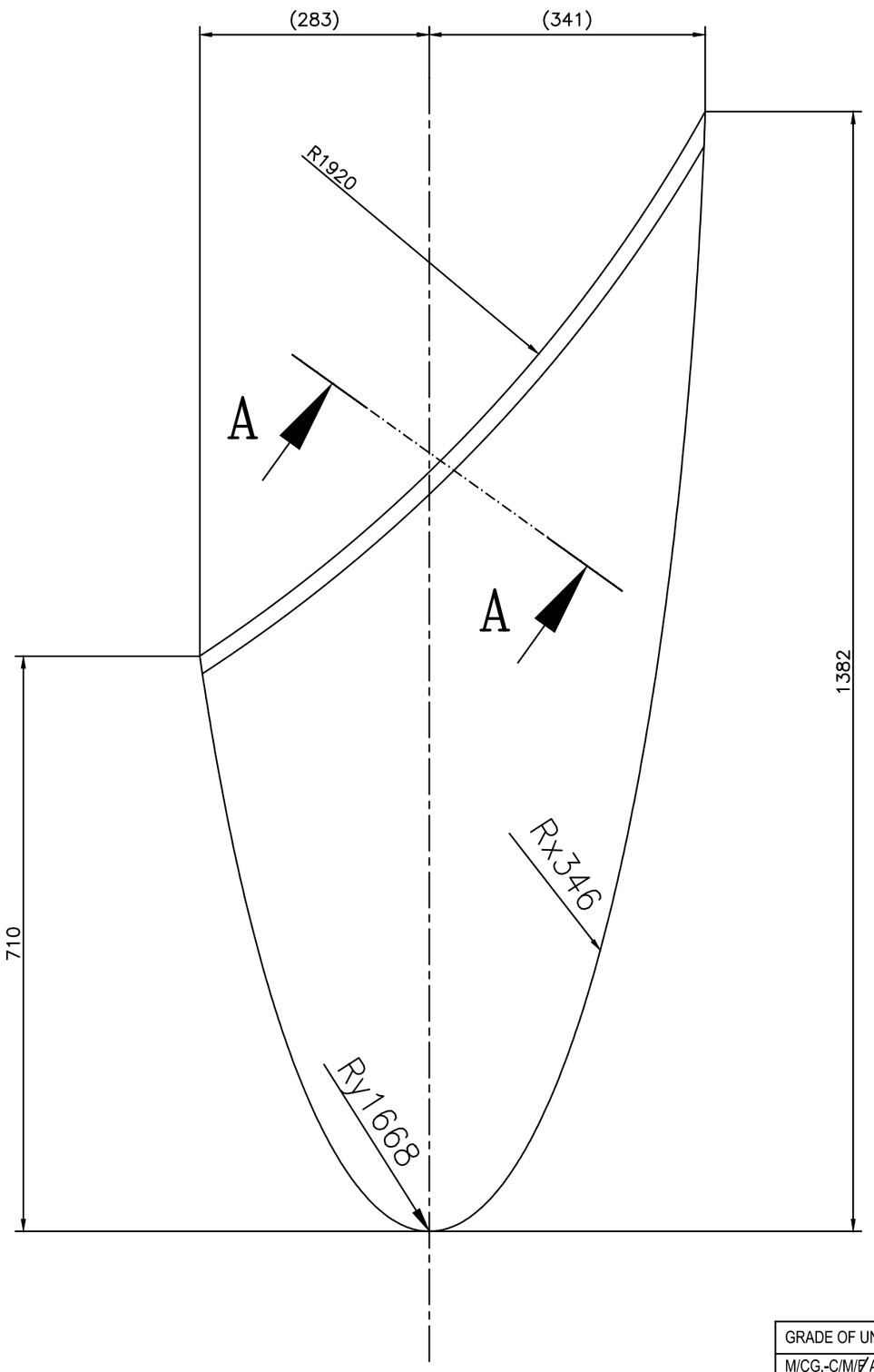

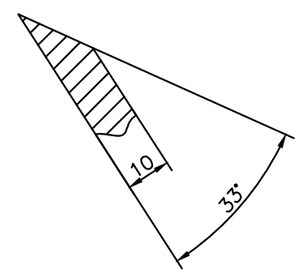

SECTION AA
SCALE 1:1

TECHNICAL REQUIREMENT .

1. IDENTIFICATION ACCORDING TO HW 0400397

COPYRIGHT AND CONFIDENTIAL
THE INFORMATION ON THIS DOCUMENT IS THE PROPERTY OF BHARAT HEAVY ELECTRICALS LIMITED. IT MUST NOT BE USED DIRECTLY OR INDIRECTLY IN ANY WAY DETERIMENTAL TO THE INTEREST OF THE COMPANY.

TIN NO. PSK046L693

Ref.Drawing No> DSPPG-0127047 12565-322505/034

Sign & Date

Inventory No.

GRADE OF UNTOL.DIM			
M/CG.-C/M/S AA0232/208			
WELDING-A/B/C/D / / AA0621104			
GAS CUTTING-'T3'AA0621101			

~~GMS No./~~ CBOM No. 9-10742-58000				STATUS OF DRG U
AGREED	DEPT	NAME	SIGN	DATE
	WT	H. VERMA	-SD/-	28.07.12

REV	DATE	ALTERED / CHECKED	REV	DATE	ALTERED / CHECKED	REV	DATE	ALTERED / CHECKED	REV	DATE	ALTERED / CHECKED	REV	DATE	ALTERED / CHECKED	REV	DATE	ALTERED / CHECKED

TYPE OF PRODUCT OR NAME OF CUSTOMER/PROJECT: STEAM TURBINE

BHARAT HEAVY ELECTRICALS LTD. RANIPUR, HARDWAR

	NAME	SIGN	DATE
DRN	POONAM	Sd/-	1.12.2011
CHD	DINESH	Sd/-	2.12.2011
APPD	D.K.RAY	Sd/-	

NO. OF VAR —

DEPT	SCALE	WEIGHT (KG)	REF. TO ASSY. DRG.	ITEM No.	NO. OF ITEMS
STE	1:5	33.4	9-10742-58000	235	—
CODE 4011					

TITLE : PLATE

CARD CODE

DRAWING NO. 2-10742-58235

SHEET No. 01 No. OF SHEETS 01

SIZE A2

FIRST ANGLE PROJECTION (ALL DIMENSIONS ARE IN mm) FORM DG 44(B)

DRAWING No. 2-10742-58234

50 ALL OVER EXCEPT OTHERWISE STATED

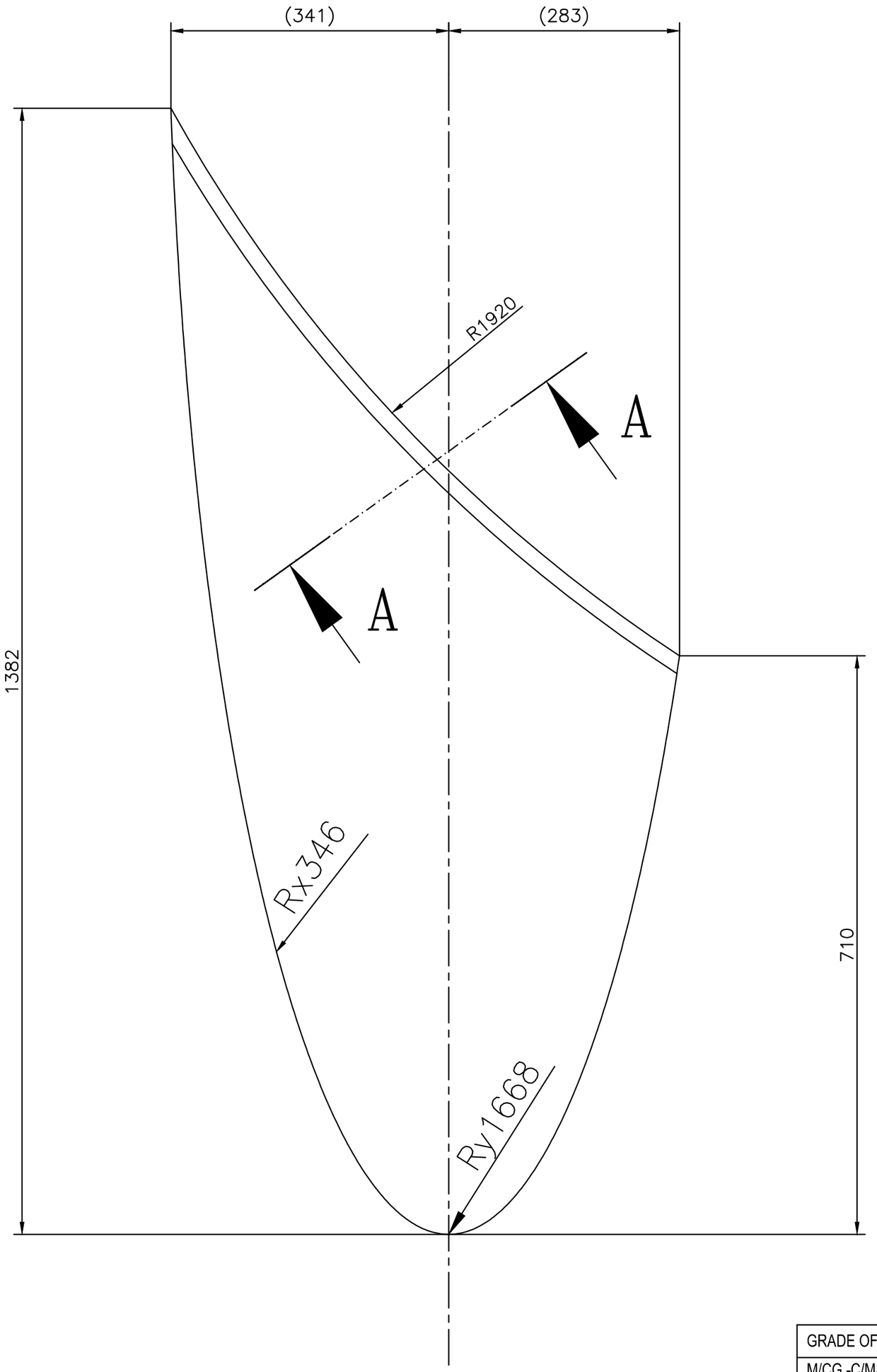

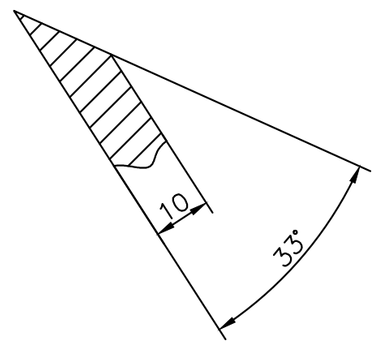

SECTION AA
SCALE 1:1

TECHNICAL REQUIREMENT:-

1. IDENTIFICATION ACCORDING TO HW 0400397

COPYRIGHT AND CONFIDENTIAL
THE INFORMATION ON THIS DOCUMENT IS THE PROPERTY OF BHARAT HEAVY ELECTRICALS LIMITED. IT MUST NOT BE USED DIRECTLY OR INDIRECTLY IN ANY WAY DETERIMENTAL TO THE INTEREST OF THE COMPANY.

TIN NO. PSK046L692

Ref.Drawing No> DSPPG-0127047, 12565-322505/034

Sign & Date

Inventory No.

GRADE OF UNTOL.DIM	
M/CG.-C/M/F AA023 0208	
WELDING-A/B/C/D / / AA0621104	
GAS CUTTING-'T3'AA0621101	

~~GMS No./~~ CBOM No. 9-10742-58000			STATUS OF DRG U
AGREED DEPT	NAME	SIGN	DATE
WT	H. VERMA	-SD/-	28.07.12

REV	DATE	ALTERED / CHECKED	REV	DATE	ALTERED / CHECKED	REV	DATE	ALTERED / CHECKED	REV	DATE	ALTERED / CHECKED	REV	DATE	ALTERED / CHECKED	REV	DATE	ALTERED / CHECKED

TYPE OF PRODUCT OR NAME OF CUSTOMER/PROJECT: STEAM TURBINE

BHARAT HEAVY ELECTRICALS LTD.
RANIPUR, HARDWAR

	NAME	SIGN	DATE
DRN	POONAM	Sd/-	1.12.2011
CHD	DINESH	Sd/-	2.12.2011
APPD	D.K.RAY	Sd/-	

NO. OF VAR — 73 74

DEPT	STE	SCALE	WEIGHT (KG)	REF. TO ASSY. DRG.	ITEM No.	NO. OF ITEMS
CODE	4011	1:5	33.4	9-10742-58000	234	— 75 77

TITLE : PLATE

CARD CODE

DRAWING NO. 7 2-10742-58234 22 23 24

SHEET No. 01. No. OF SHEETS 01.

SIZE A2

FIRST ANGLE PROJECTION (ALL DIMENSIONS ARE IN mm)

FORM DG 44(B)

DRAWING No. 2-10742-58216

50 ALL OVER EXCEPT OTHERWISE STATED

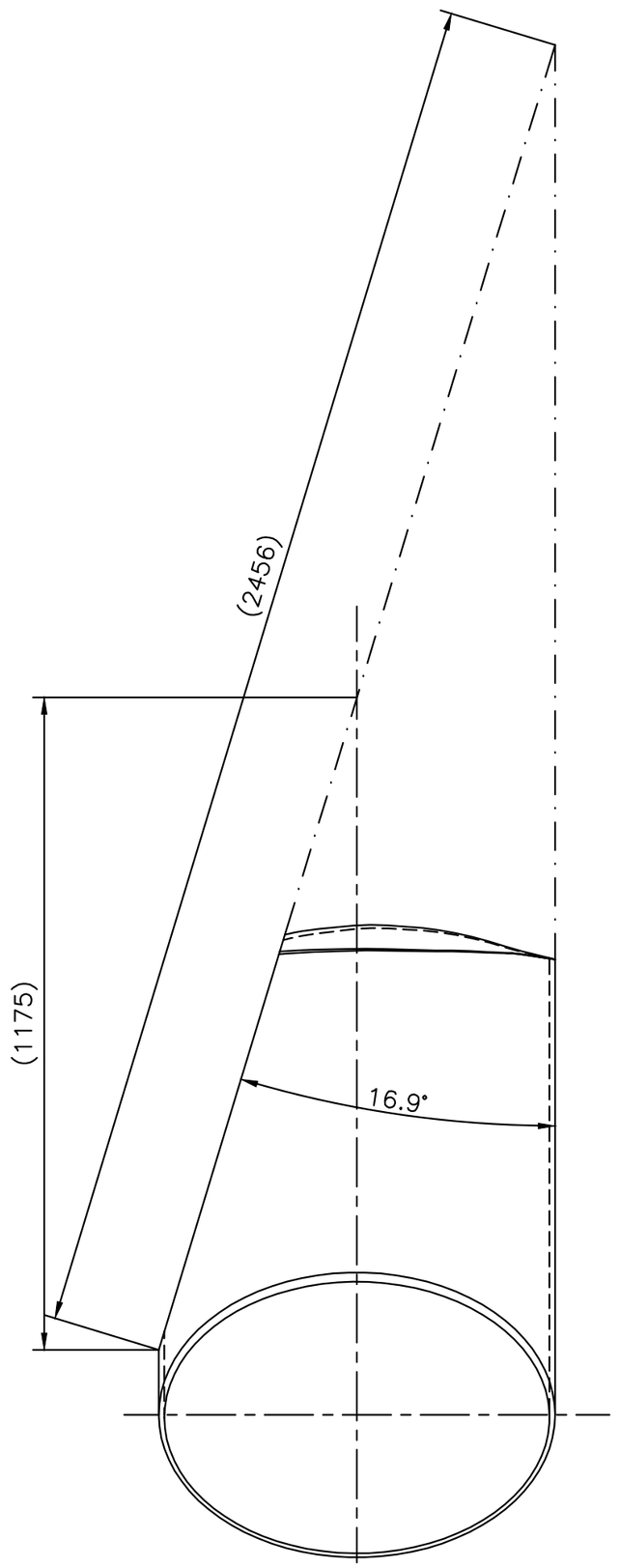

VIEW Z (D6)

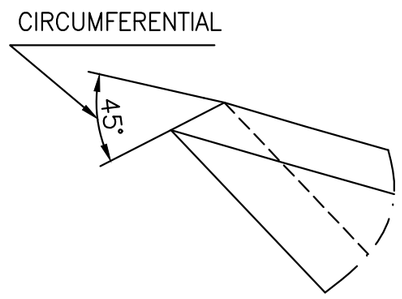

DETAIL X
SCALE 1:1

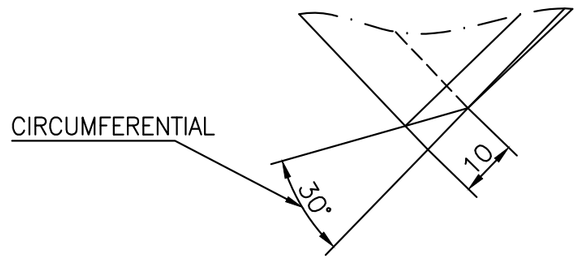

DETAIL Y
SCALE 1:1

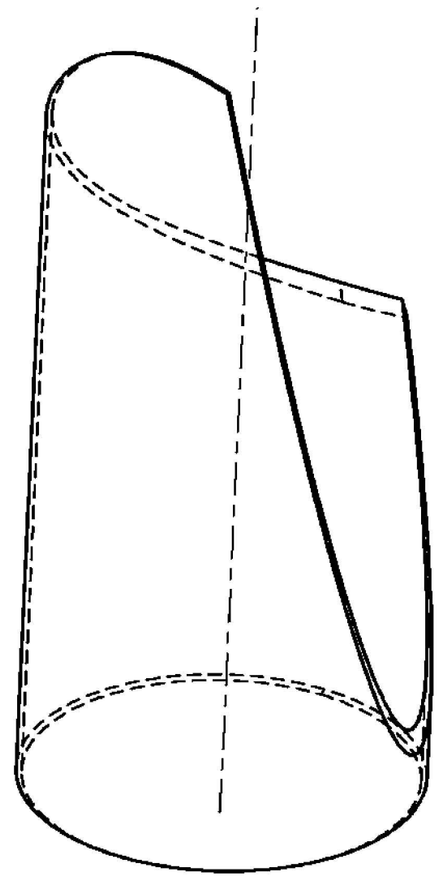

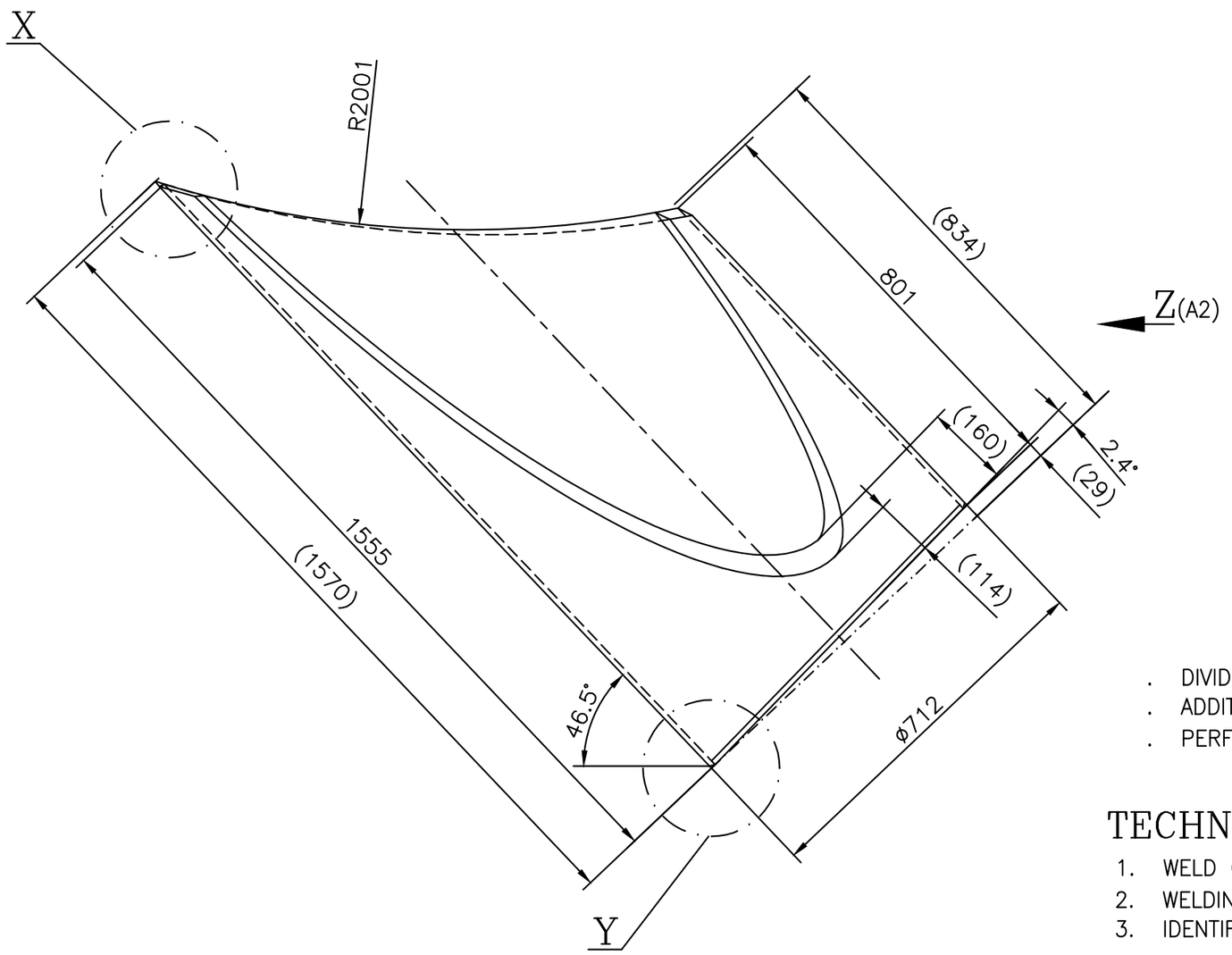

DETAIL: FULL PENETRATION WELD

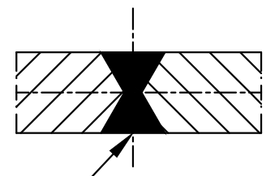

WELD EDGE PREPARATION
ACC. TO ISO 9692-1/ISO 9692-2

- DIVIDED IN PARTS IF REQUIRED.
- ADDITIONAL LONGITUDINAL WELD SEAMS SHALL BE MADE AS FULL PENETRATION WELD.
- PERFORMANCE DEPENDING ON WELD PROCEDURE OF SUPPLIER/SHOP.

TECHNICAL REQUIREMENTS:-

1. WELD CLASSIFICATION GROUP ACCORDING TO HW0620099:BS/BK.
2. WELDING TEST SCOPE ACCORDING TO HW0850199. CSR-1.
3. IDENTIFICATION ACCORDING TO HW0400397

COPYRIGHT AND CONFIDENTIAL
THE INFORMATION ON THIS DOCUMENT IS THE PROPERTY OF BHARAT HEAVY ELECTRICALS LIMITED. IT MUST NOT BE USED DIRECTLY OR INDIRECTLY IN ANY WAY DETERIMENTAL TO THE INTEREST OF THE COMPANY.

TIN NO. PSK0461.675

Ref.Drawing No> DSPPG-0127034

Sign & Date

Inventory No.

GRADE OF UNTOL. DIM
M/CG.- AA0230208 m
WELDING-CLASS 'B' OF AA0621104
GAS CUTTING-TABLE 3 OF AA0621101

CBOM No. 9-10742-58000			STATUS OF DRG
AGREED DEPT	NAME	SIGN	DATE
WT	H. VERMA	sd/-	28.07.12

REV	DATE	ALTERED / CHECKED
01	18.05.13	ALTERED MONIKA / CHECKED DINESH

DATE UPDATED.
SH2. SUPERSEDED THE OLD DRG. UNDER THE SAME NO.
AS PER C\A NO. STE-13-F0201.

TYPE OF PRODUCT **STEAM TURBINE**
OR
NAME OF CUSTOMER/PROJECT

BHARAT HEAVY ELECTRICALS LTD.
RANIPUR, HARDWAR

	NAME	SIGN	DATE
DRN	POONAM	sd/-	01.12.2011
CHD	DINESH	sd/-	04.12.2011
APPD	D.K.RAY	sd/-	28.07.2012

NO. OF VAR 73 74

DEPT STE
CODE 4011
SCALE 1:10
WEIGHT (KG) 156.00
REF. TO ASSY. DRG. 9-10742-58000
ITEM No. 216
NO. OF ITEMS 75 77

TITLE : PIPE

CARD CODE

DRAWING NO. 2-10742-58216 22 23 24

SHEET No. 1 No. OF SHEETS 2

SIZE A2

FIRST ANGLE PROJECTION (ALL DIMENSIONS ARE IN mm)

FORM DG 44(B)

DRAWING No. 2-10742-58213

50 ALL OVER EXCEPT OTHERWISE STATED

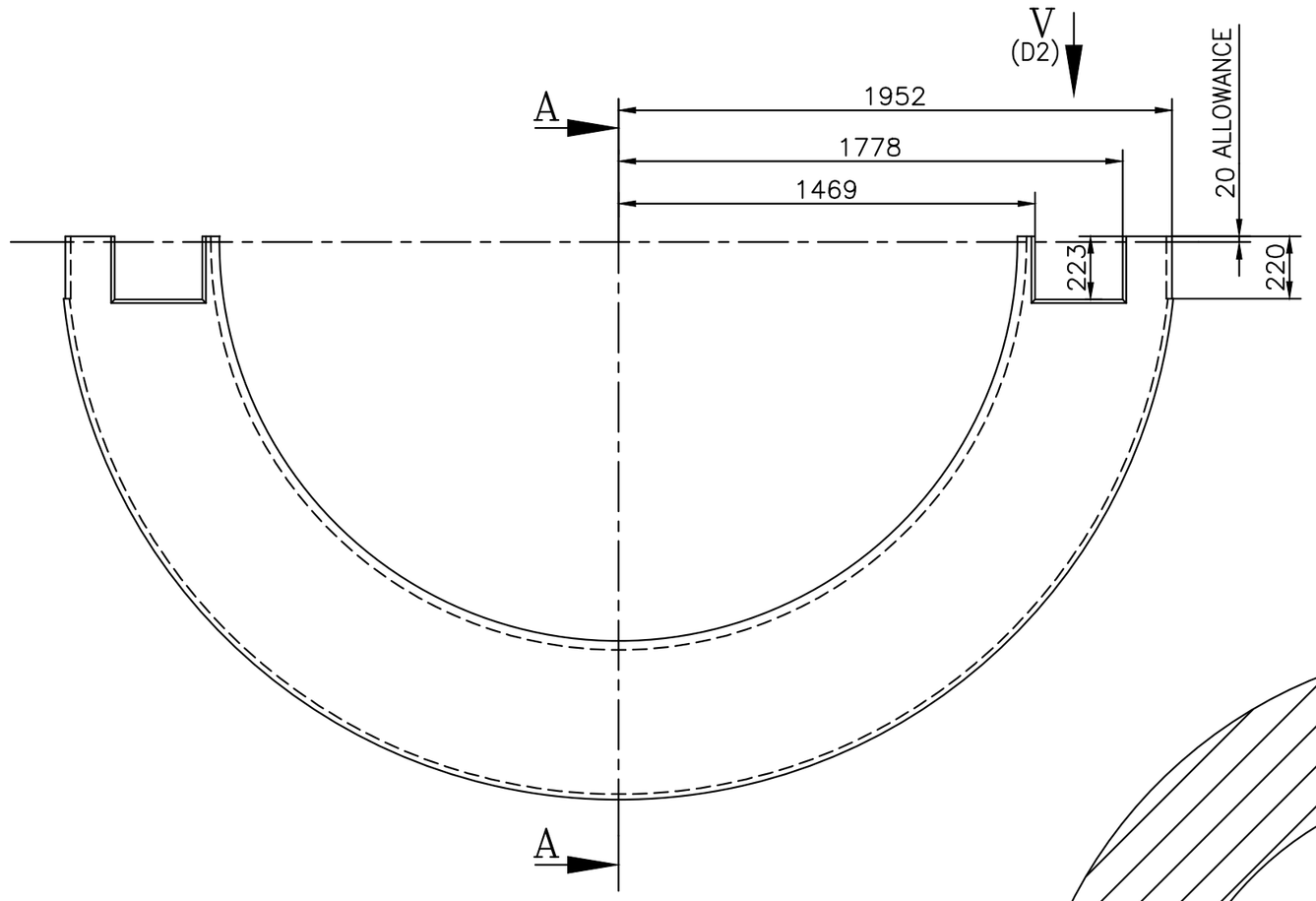

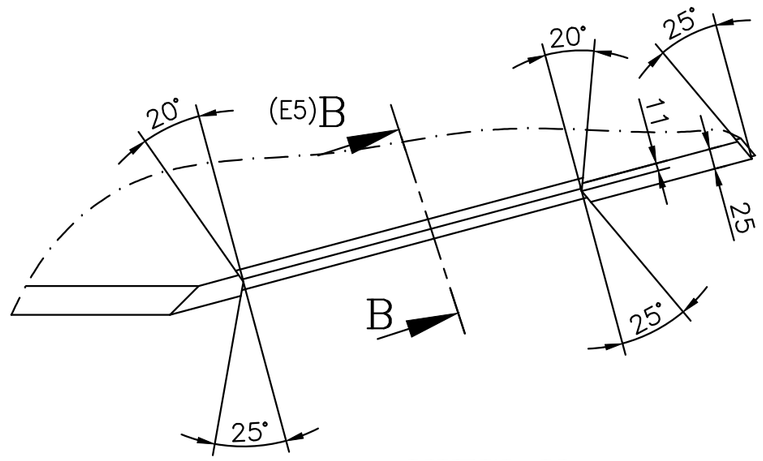

VIEW V (A4)
SCALE 1:5

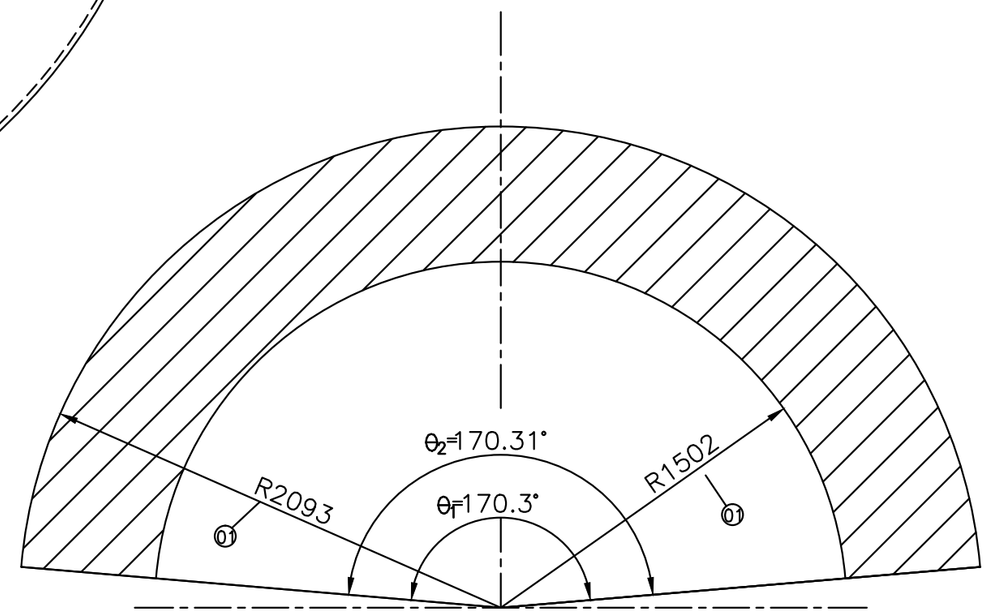

DEVELOPMENT OF CONE
SCALE 1:50

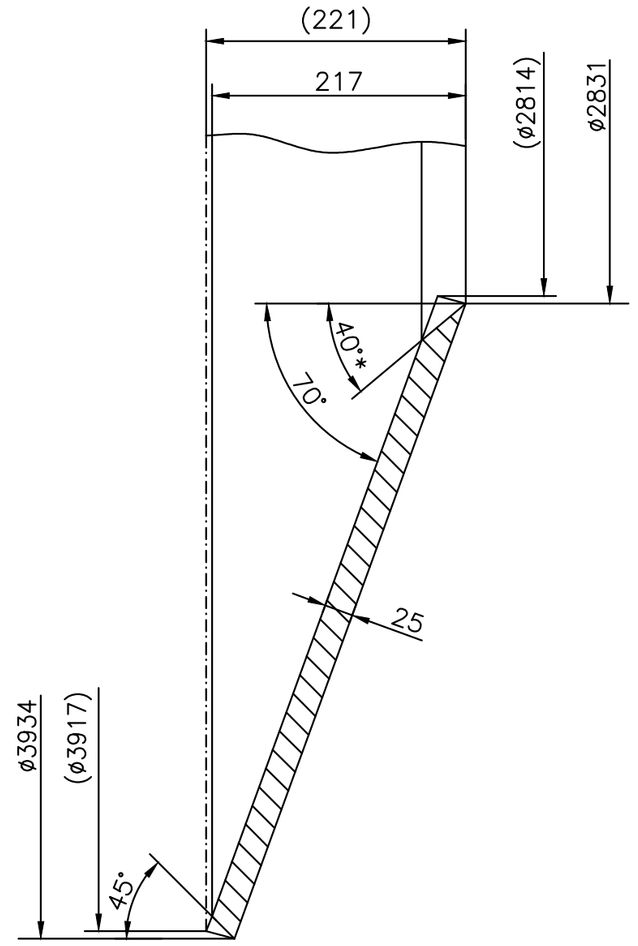

SECTION AA (A3)
SCALE 1:5

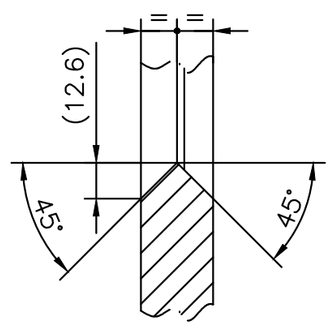

SECTION BB (D2)
SCALE 1:2

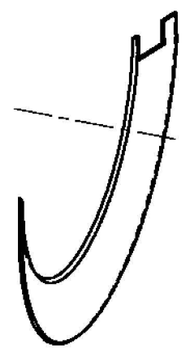

1:40

DIVIDED IN PARTS IF REQUIRED, ADDITIONAL LONGITUDINAL WELD SEAMS SHALL BE MADE AS FULL PENETRATION WELDS, PERFORMANCE DEPENDING ON WELD PROCEDURE OF SUPPLIER/SHOP.

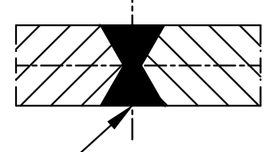

DETAIL: FULL PENETRATION WELD
WELD EDGE PREPARATION
ACC. TO ISO 9692-1/ISO 9692-2

TECHNICAL REQUIREMENTS:-

1. "*" IF REQUIRED, THE WELD EDGE PREPARATION COULD BE DONE ACCORDING TO ISO 9692-1.THE DRAWING REQUIREMENTS (E.G. WELD QUALITY, FULL PENETRATION, BUTT WELD,FILLET WELD) MUST BE CONSIDERED.
2. WELD CLASSIFICATION GROUP ACCORDING TO HW0620099:BS/BK.
3. WELDING TEST SCOPE ACCORDING TO HW0850199. CSR-1.
4. IDENTIFICATION ACCORDING TO HW0400397

GRADE OF UNTOL. DIM
M/CG.- AA0230208 m
WELDING-CLASS 'B' OF AA0621104
GAS CUTTING-TABLE 3 OF AA0621101

CBOM No. 9-10742-58000			STATUS OF DRG U
AGREED DEPT	NAME	SIGN	DATE
WT	H. VERMA	sd/-	22.08.12

REV	DATE	ALTERED	CHECKED
01	25.05.13	MONIKA	DINESH

DATE & NO. OF SHEET UPDATED
INSERT NEW SHEET.
AS PER C\A NO. STE-13-F0205.

TYPE OF PRODUCT **STEAM TURBINE**
OR
NAME OF CUSTOMER/PROJECT

BHARAT HEAVY ELECTRICALS LTD.
RANIPUR, HARDWAR

	NAME	SIGN	DATE
DRN	POONAM	sd/-	17.08.2012
CHD	DINESH	sd/-	22.08.2012
APPD	D.K.RAY	sd/-	23.08.2012

NO. OF VAR 73 74

DEPT	SCALE	WEIGHT (KG)	REF. TO ASSY. DRG.	ITEM No.	NO. OF ITEMS
STE	1:20	557.00	9-10742-58000	213	75 77
CODE 4011					

TITLE : HALF CONE

CARD CODE

DRAWING NO. 2-10742-58213 (7 22 23 24)

SHEET No. 1 No. OF SHEETS 2

SIZE A2

REV	DATE	ALTERED	CHECKED

COPYRIGHT AND CONFIDENTIAL
THE INFORMATION ON THIS DOCUMENT IS THE PROPERTY OF BHARAT HEAVY ELECTRICALS LIMITED. IT MUST NOT BE USED DIRECTLY OR INDIRECTLY IN ANY WAY DETERIMENTAL TO THE INTEREST OF THE COMPANY.

TIN NO. PSK046L674
Ref.Drawing No> DSPPG-0127031
Sign & Date
Inventory No.

FIRST ANGLE PROJECTION (ALL DIMENSIONS ARE IN mm)

FORM DG 44(B)

DRAWING No. 2-10742-58149

50 ALL OVER EXCEPT OTHERWISE STATED

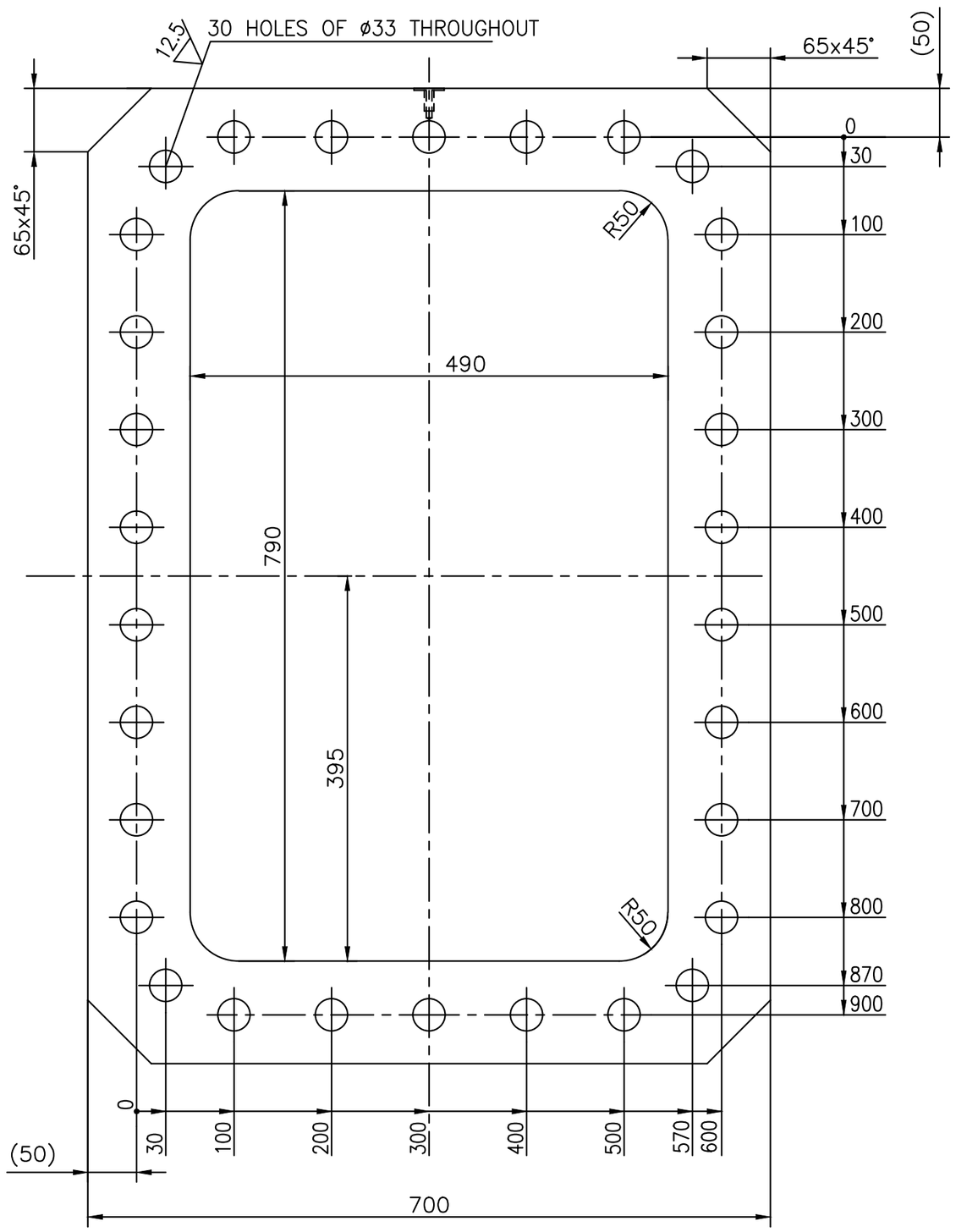

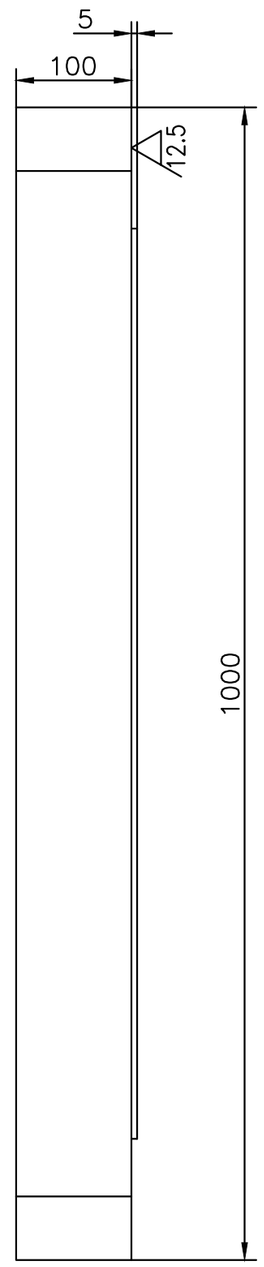

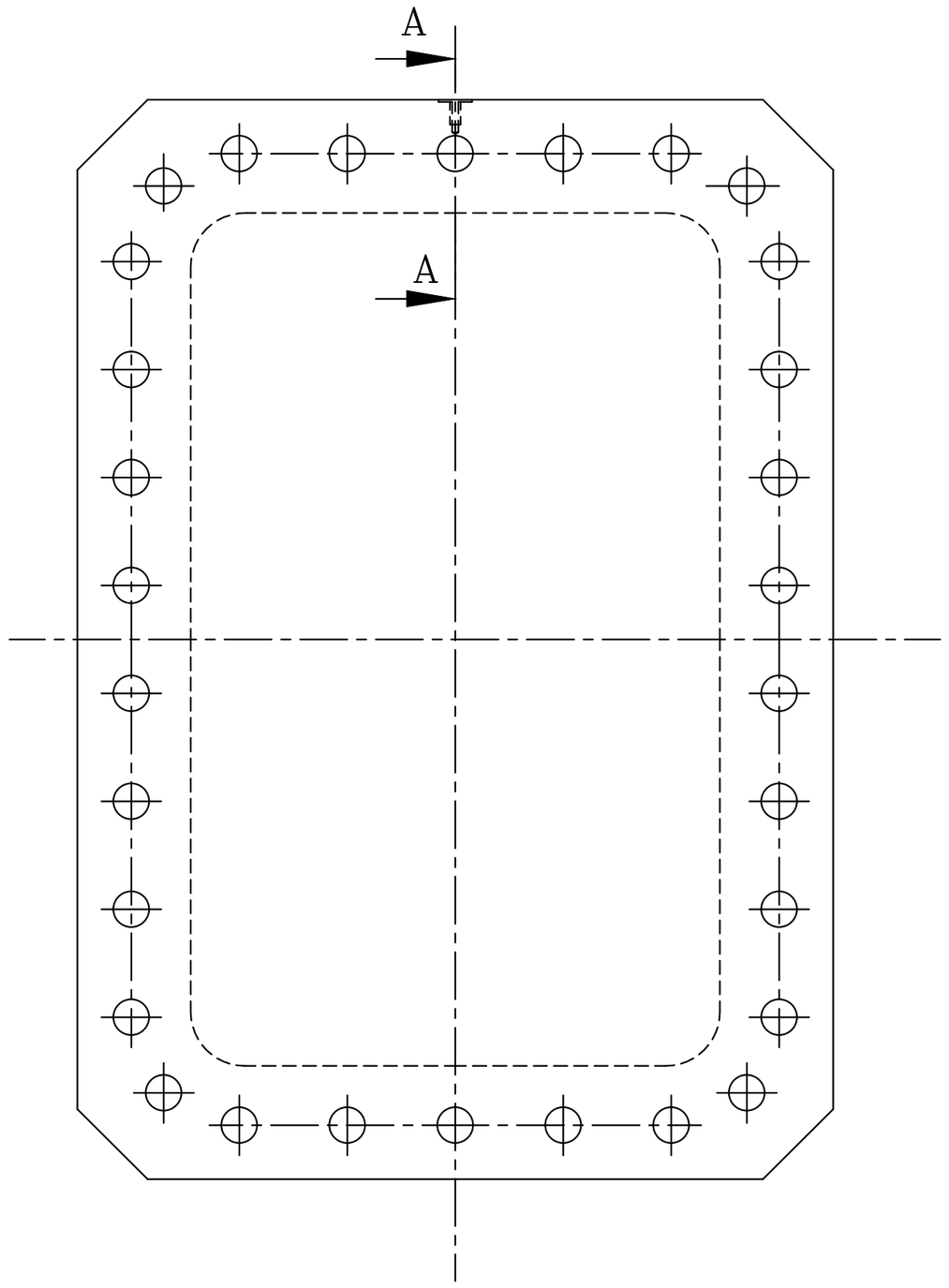

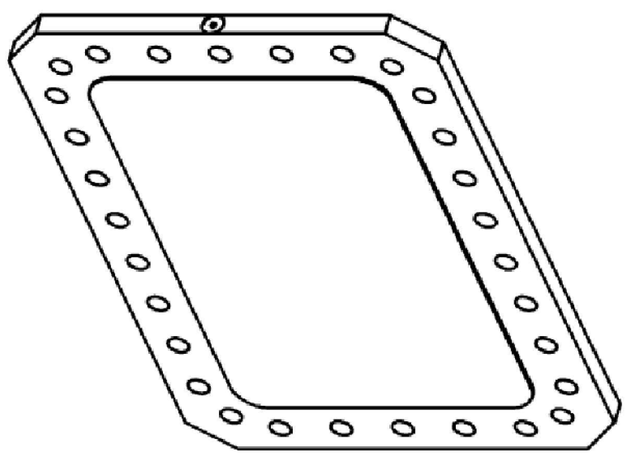

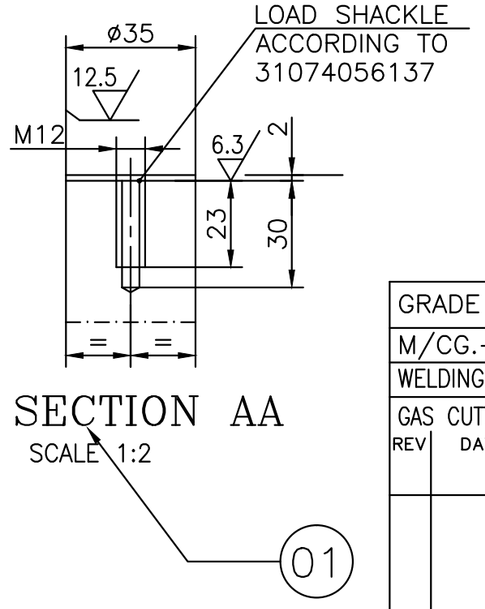

SECTION AA
SCALE 1:2

TECHNICAL REQUIREMENT:-

1. IDENTIFICATION ACCORDING TO HW 0400397.

GRADE OF UNTOL. DIM			
M/CG.- AA0230208 m			
WELDING-CLASS 'B' OF AA0621104			
GAS CUTTING-TABLE 3 OF AA0621101			
REV	DATE	ALTERED	
		CHECKED	

CBOM No. 9-10742-58000 — STATUS OF DRG U

AGREED DEPT	NAME	SIGN	DATE
WT	H. VERMA	sd/-	28.07.12

REV	DATE	ALTERED	ANOOP
01	19.04.14	CHECKED	DINESH

SECTION AA TO BE ADDED.

AS PER C\A NO. STE-14-F0040.

TYPE OF PRODUCT **STEAM TURBINE**
OR
NAME OF CUSTOMER/PROJECT

BHARAT HEAVY ELECTRICALS LTD.
RANIPUR, HARDWAR

	NAME	SIGN	DATE
DRN	POONAM	sd/-	29.11.2011
CHD	DINESH	sd/-	01.12.2011
APPD	D.K.RAY	sd/-	

NO. OF VAR 73 74

DEPT	SCALE	WEIGHT (KG)	REF. TO ASSY. DRG.	ITEM No.	NO. OF ITEMS
STE	1:5	512.00	9-10742-58000	149	75 77
CODE 4011					

TITLE : BLOCK FLANGE

CARD CODE

DRAWING NO. 7 2-10742-58149 22 23 24

SHEET No. 1 No. OF SHEETS 1

SIZE A2

COPYRIGHT AND CONFIDENTIAL
THE INFORMATION ON THIS DOCUMENT IS THE PROPERTY OF BHARAT HEAVY ELECTRICALS LIMITED. IT MUST NOT BE USED DIRECTLY OR INDIRECTLY IN ANY WAY DETERMENTAL TO THE INTEREST OF THE COMPANY.

TIN NO. PSK046L665
Ref.Drawing No> DSPPG-0127069
Sign & Date
Inventory No.

FIRST ANGLE PROJECTION (ALL DIMENSIONS ARE IN mm)

FORM DG 44(B)

DRAWING No. 2-10742-58123

50 ALL OVER EXCEPT OTHERWISE STATED

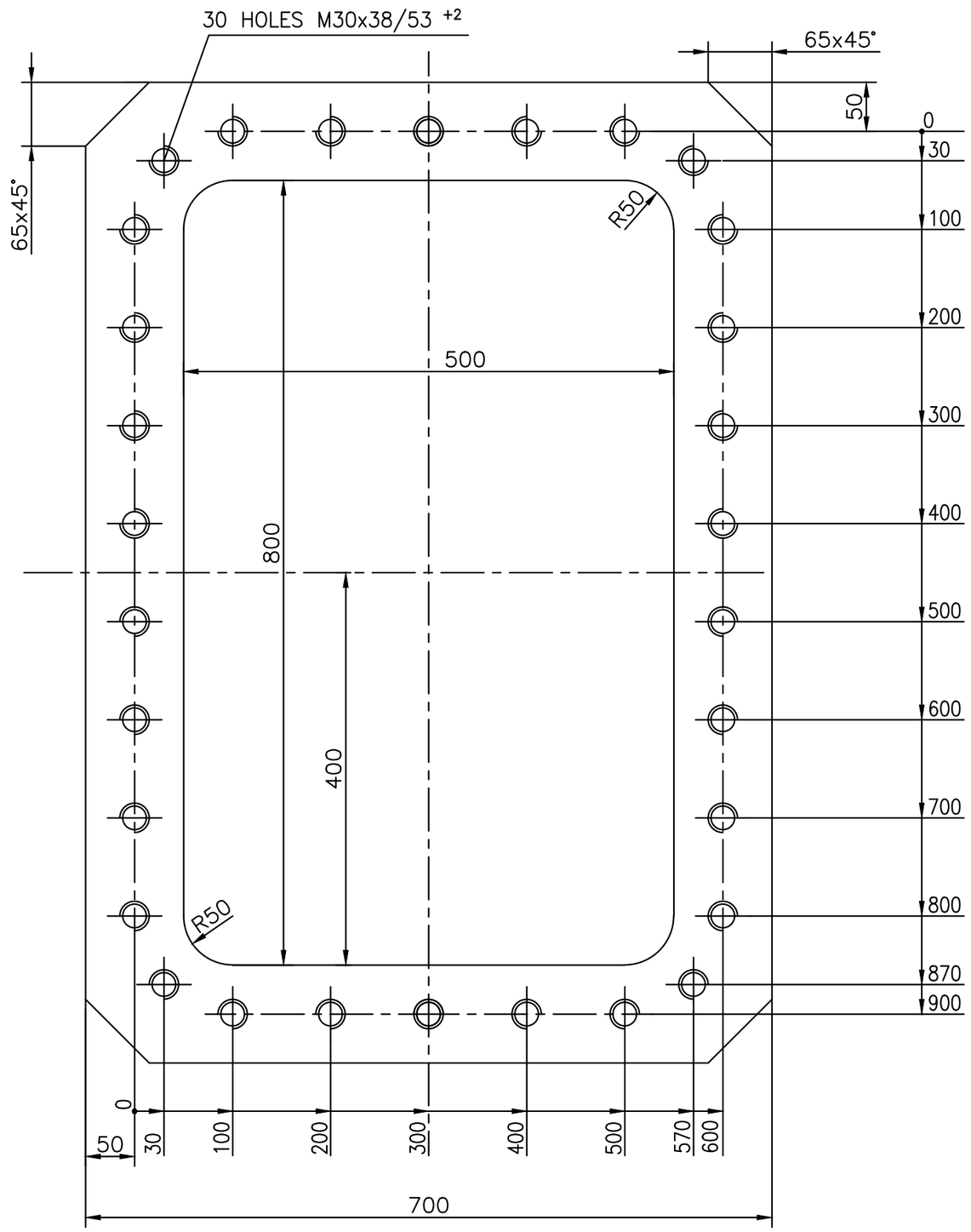

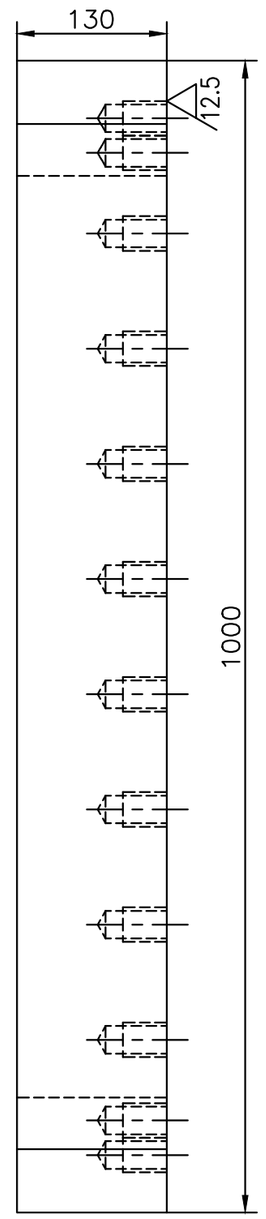

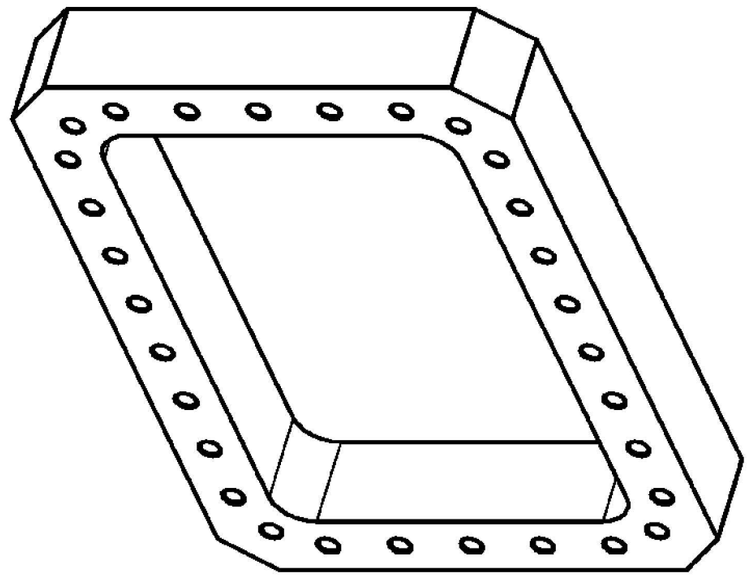

1:10

TECHNICAL REQUIREMENTS:-

1. IDENTIFICATION ACCORDING TO HW 0400397.

COPYRIGHT AND CONFIDENTIAL

THE INFORMATION ON THIS DOCUMENT IS THE PROPERTY OF BHARAT HEAVY ELECTRICALS LIMITED. IT MUST NOT BE USED DIRECTLY OR INDIRECTLY IN ANY WAY DETERIMENTAL TO THE INTEREST OF THE COMPANY.

TIN NO. PSK046L661

Ref.Drawing No> DSPPG-0127067

Sign & Date

Inventory No.

GRADE OF UNTOL. DIM
M/CG.- AA0230208 m
WELDING-CLASS 'B' OF AA0621104
GAS CUTTING-TABLE 3 OF AA0621101

REV	DATE	ALTERED / CHECKED

CBOM No. 9-10742-58000

STATUS OF DRG U

AGREED DEPT	NAME	SIGN	DATE
WT	H. VERMA	sd/-	28.07.12

TYPE OF PRODUCT **STEAM TURBINE**
OR
NAME OF CUSTOMER/PROJECT

BHARAT HEAVY ELECTRICALS LTD.
RANIPUR, HARDWAR

	NAME	SIGN	DATE
DRN	POONAM	sd/-	28.11.2011.
CHD	DINESH	sd/-	01.12.2011
APPD	D.K.RAY	sd/-	

NO. OF VAR 73 74

DEPT STE
CODE 4011

SCALE 1:5

WEIGHT (KG) 292.00

REF. TO ASSY. DRG. 9-10742-58000

ITEM No. 123

NO. OF ITEMS 75 77

TITLE : **FLANGE**

CARD CODE

DRAWING NO. 2-10742-58123 7 22 23 24

SHEET No. 1 No. OF SHEETS 1

SIZE A2

FIRST ANGLE PROJECTION (ALL DIMENSIONS ARE IN mm)

FORM DG 44(B)

DRAWING No. 2-10742-58122

50 ALL OVER EXCEPT OTHERWISE STATED

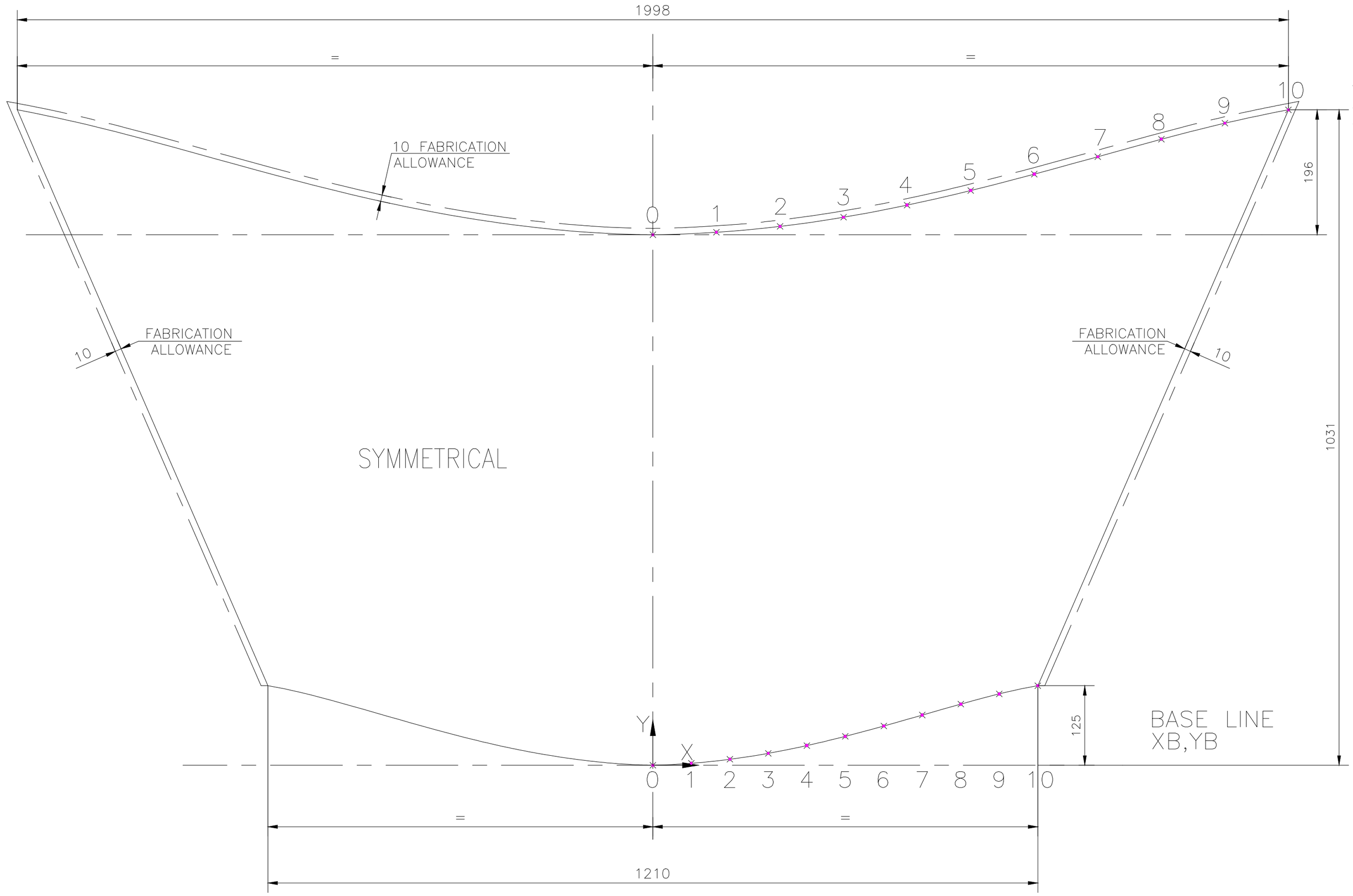

DEVELOPMENT OF PLATE

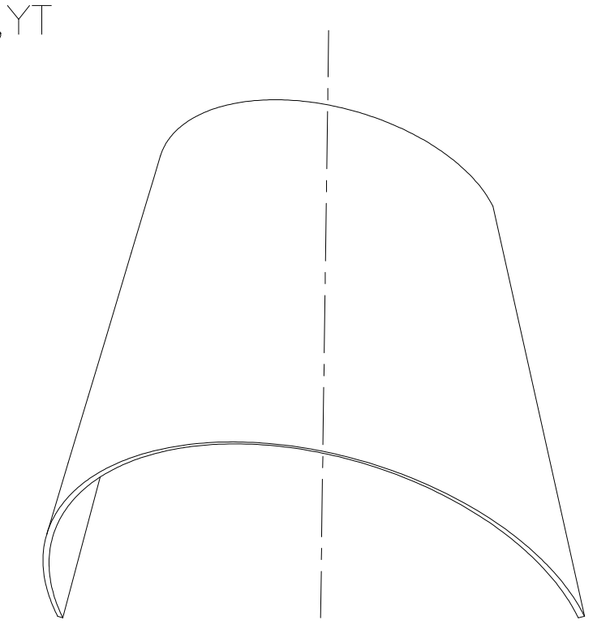

SL. NO.	CO-ORDINATES			
	BASE LINE		TOP LINE	
	XB	YB	XT	YT
0	0	0	0	0
1	60	3	100	4
2	121	9	200	13
3	181	19	300	28
4	242	31	400	47
5	303	45	500	70
6	363	62	599	95
7	423	79	699	123
8	448	96	799	150
9	544	112	899	175
10	605	125	999	196

COPYRIGHT AND CONFIDENTIAL
THE INFORMATION ON THIS DOCUMENT IS THE PROPERTY OF BHARAT HEAVY ELECTRICALS LIMITED. IT MUST NOT BE USED DIRECTLY OR INDIRECTLY IN ANY WAY DETERIMENTAL TO THE INTEREST OF THE COMPANY.

Ref.Drawing No> DSPPG-0127041 TIN NO. PSK046L660

Sign & Date

Inventory No.

GRADE OF UNTOL.DIM
M/CG.-C/M/F AA0230208
WELDING-A/B/C/D AA0621104
GAS CUTTING-'T3'AA0621101

~~CMS No.~~/ CBOM No. 9-10742-58000			STATUS OF DRG U
AGREED DEPT	NAME	SIGN	DATE
WT	H. VERMA	-SD/-	28.07.12

REV	DATE	ALTERED / CHECKED	REV	DATE	ALTERED / CHECKED	REV	DATE	ALTERED / CHECKED	REV	DATE	ALTERED / CHECKED	REV	DATE	ALTERED / CHECKED	REV	DATE	ALTERED / CHECKED

1 2 3 4 5 6

TYPE OF PRODUCT OR NAME OF CUSTOMER/PROJECT: STEAM TURBINE

BHARAT HEAVY ELECTRICALS LTD.
RANIPUR, HARDWAR

	NAME	SIGN	DATE
DRN	AFZAL KHAN	-SD/-	18.07.2012
CHD	DINESH	-SD/-	19.07.2012
APPD	D.K.RAY	-SD/-	

NO. OF VAR —

DEPT STE

CODE 4011

SCALE 1:5

WEIGHT (KG) 304

REF. TO ASSY. DRG. 9-10742-58000

ITEM No. 122

NO. OF ITEMS —

TITLE : PLATE

CARD CODE

DRAWING NO. 2-10742-58122

SHEET No. 02 No. OF SHEETS 02

SIZE A2

FIRST ANGLE PROJECTION (ALL DIMENSIONS ARE IN mm) FORM DG 44(B)

DRAWING No 2-10742-58122

50 ALL OVER EXCEPT OTHERWISE STATED

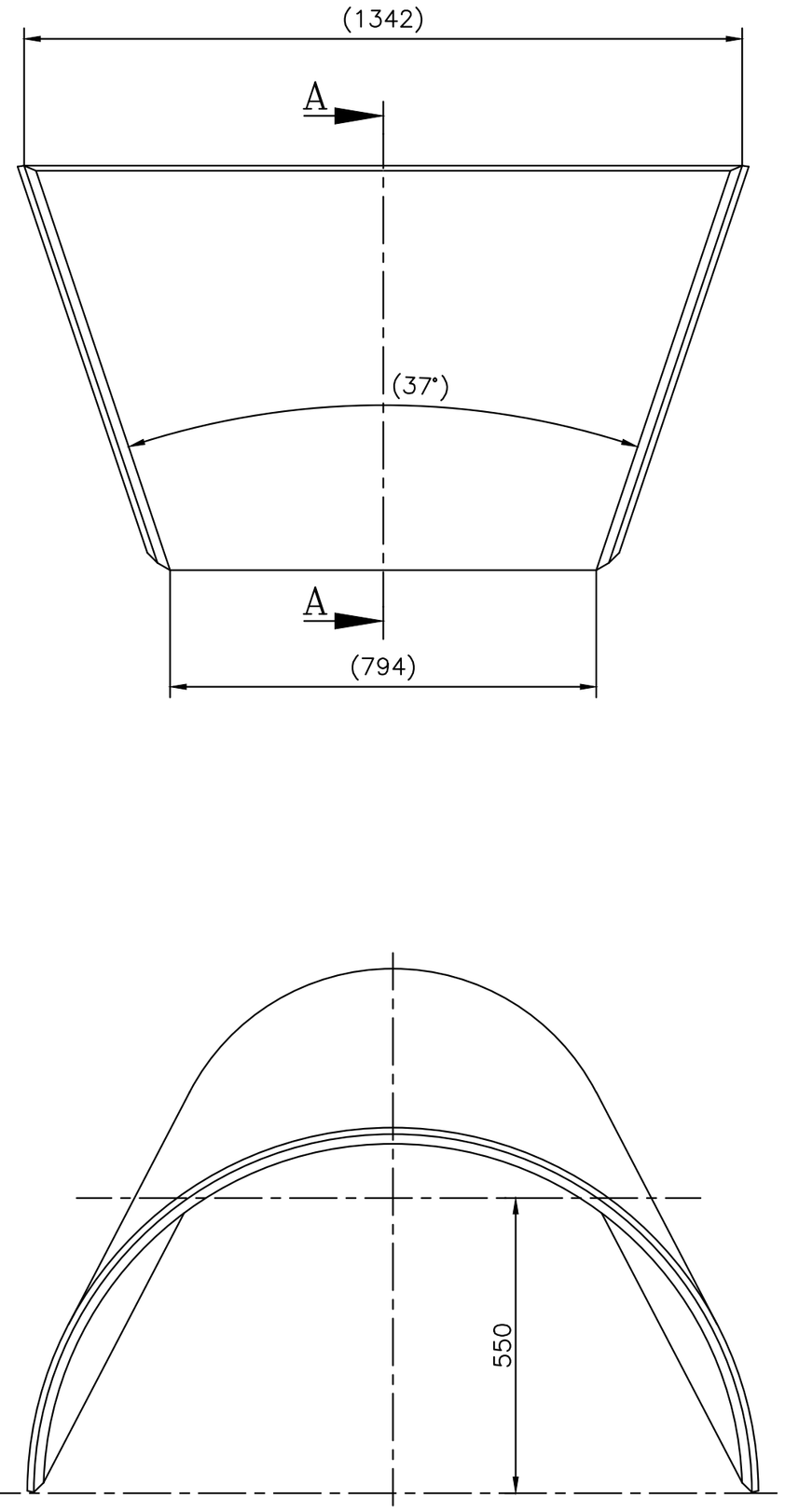

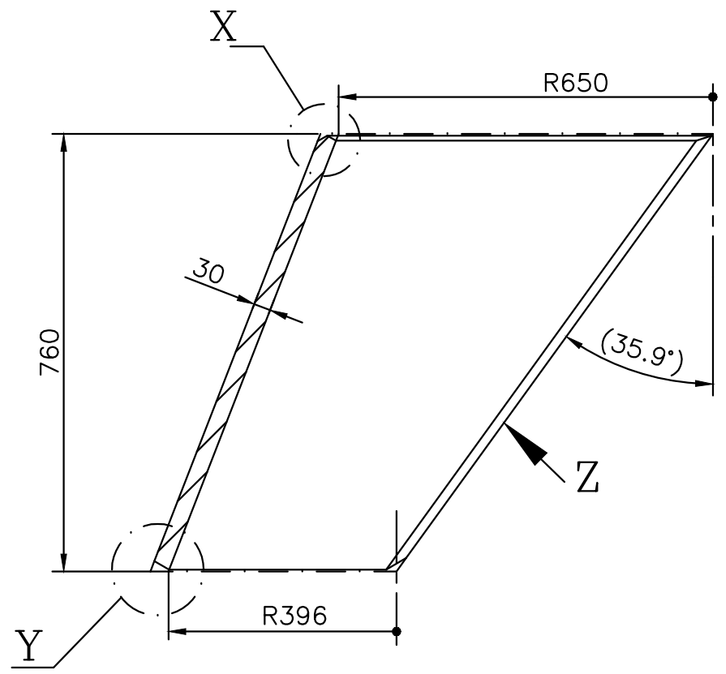

SECTION AA

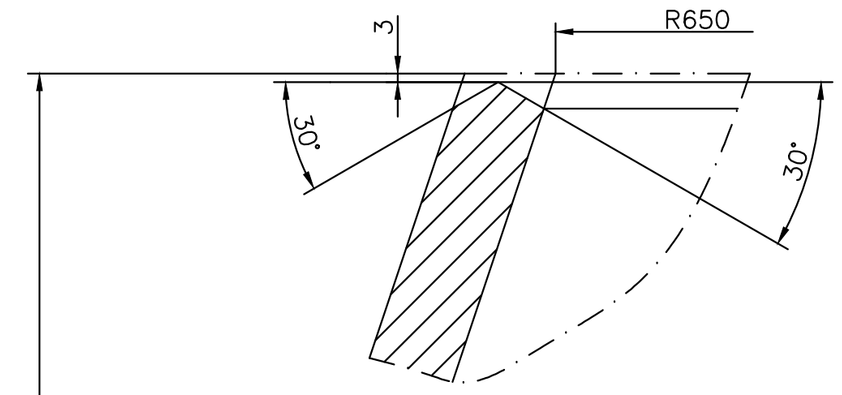

DETAIL X
SCALE 1:2

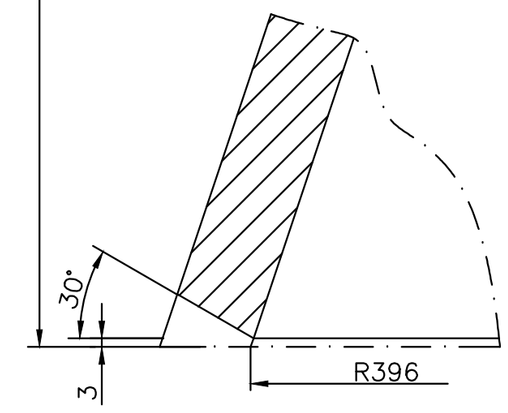

DETAIL Y
SCALE 1:2

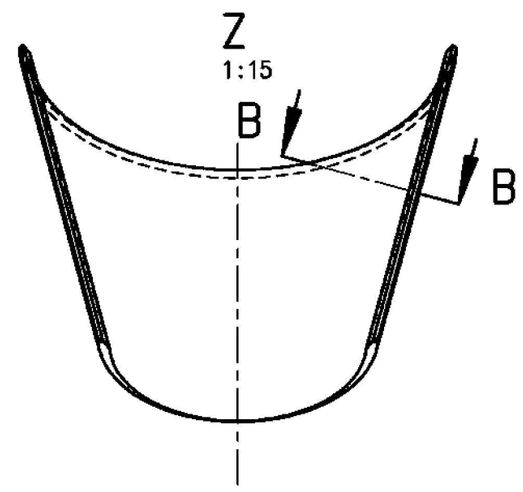

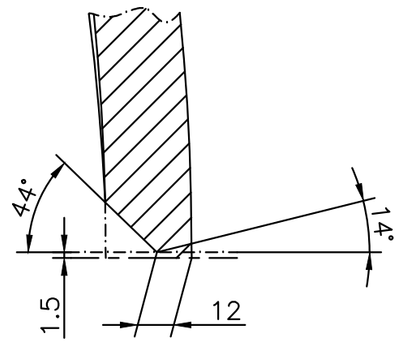

SECTION BB (TURNED)
SCALE 1:2

TECHNICAL REQUIREMENT

1. IDENTIFICATION ACCORDING TO HW 0400397.

COPYRIGHT AND CONFIDENTIAL
THE INFORMATION ON THIS DOCUMENT IS THE PROPERTY OF BHARAT HEAVY ELECTRICALS LIMITED. IT MUST NOT BE USED DIRECTLY OR INDIRECTLY IN ANY WAY DETRIMENTAL TO THE INTEREST OF THE COMPANY.

TIN NO. PSK046L660.

Ref.Drawing No> DSPPG-0127041

Sign & Date

Inventory No. TIN NO.

GRADE OF UNTOL.DIM	
M/CG.-C/M/F AA023Ø208	
WELDING-A/B/C/D / / AA0621104	
GAS CUTTING-'T3'AA0621101	

~~GMS No./~~ CBOM No.			STATUS OF DRG
9-10742-58000			U
AGREED DEPT	NAME	SIGN	DATE
WT	H. VERMA	SD/-	28.07.12

REV	DATE	ALTERED / CHECKED	REV	DATE	ALTERED / CHECKED	REV	DATE	ALTERED / CHECKED	REV	DATE	ALTERED / CHECKED	REV	DATE	ALTERED / CHECKED	REV	DATE	ALTERED / CHECKED

TYPE OF PRODUCT OR NAME OF CUSTOMER/PROJECT: STEAM TURBINE

BHARAT HEAVY ELECTRICALS LTD.
RANIPUR, HARDWAR

	NAME	SIGN	DATE
DRN	POONAM	SD/-	28.11.2011
CHD	DINESH	SD/-	01.12.2011
APPD	D.K.RAY	SD/-	

NO. OF VAR — 73 74

DEPT	STE	SCALE	WEIGHT (KG)	REF. TO ASSY. DRG.	ITEM No.	NO. OF ITEMS
CODE	4011	1:10	304.00	9-10742-58000	122	— 75 77

TITLE : PLATE

CARD CODE

DRAWING NO. 2-10742-58122 22 23 24

SHEET No. 01 No. OF SHEETS 02

SIZE A2

FIRST ANGLE PROJECTION (ALL DIMENSIONS ARE IN mm)

FORM DG 44(B)

DRAWING No. 2-10742-58121

50 ALL OVER EXCEPT OTHERWISE STATED

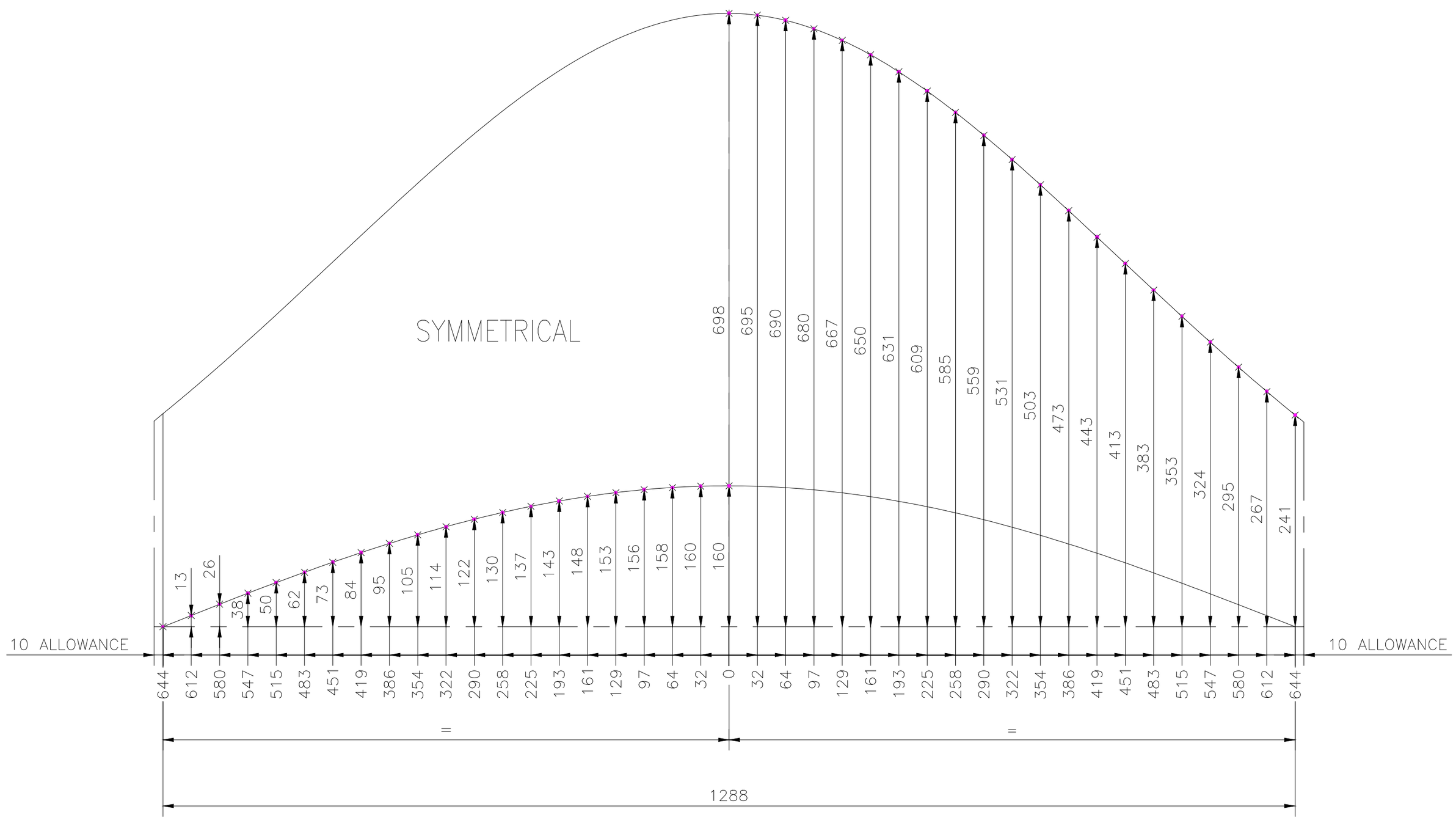

DEVELOPMENT OF PLATE

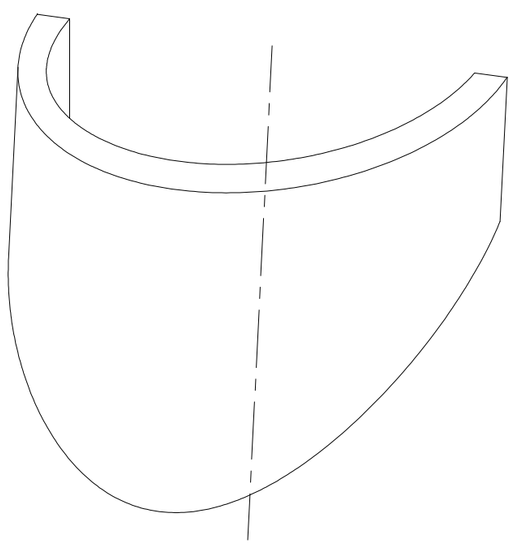

COPYRIGHT AND CONFIDENTIAL
THE INFORMATION ON THIS DOCUMENT IS THE PROPERTY OF BHARAT HEAVY ELECTRICALS LIMITED. IT MUST NOT BE USED DIRECTLY OR INDIRECTLY IN ANY WAY DETERIMENTAL TO THE INTEREST OF THE COMPANY.

Ref.Drawing No> DSPPG-0127040 | TIN NO. PSK046L659

Sign & Date

Inventory No.

REV	DATE	ALTERED / CHECKED	REV	DATE	ALTERED / CHECKED	REV	DATE	ALTERED / CHECKED	REV	DATE	ALTERED / CHECKED	REV	DATE	ALTERED / CHECKED	REV	DATE	ALTERED / CHECKED

1 2 3 4 5 6

GRADE OF UNTOL.DIM
M/CG.–Ø/M/F AA0230208
WELDING–A/B/C/D AA0621104
GAS CUTTING–'T3'AA0621101

~~GMS No.~~/ CBOM No. 9–10742–58000

AGREED DEPT	NAME	SIGN	DATE
WT	H. VERMA	–SD/–	28.07.12

STATUS OF DRG U

TYPE OF PRODUCT OR NAME OF CUSTOMER/PROJECT: STEAM TURBINE

BHARAT HEAVY ELECTRICALS LTD. RANIPUR, HARDWAR

	NAME	SIGN	DATE
DRN	AFZAL KHAN	–SD/–	18.07.2012
CHD	DINESH	–SD/–	19.07.2012
APPD	D.K.RAY	–SD/–	

NO. OF VAR —

DEPT STE

CODE 4011

SCALE 1:4

WEIGHT (KG) 121

REF. TO ASSY. DRG. 9–10742–58000

ITEM No. 121

NO. OF ITEMS —

TITLE : PLATE

CARD CODE

DRAWING NO. 2-10742-58121

SHEET No. 02 | No. OF SHEETS 02

SIZE A2

FIRST ANGLE PROJECTION (ALL DIMENSIONS ARE IN mm) FORM DG 44(B)

DRAWING No 2-10742-58121

50 ALL OVER EXCEPT OTHERWISE STATED

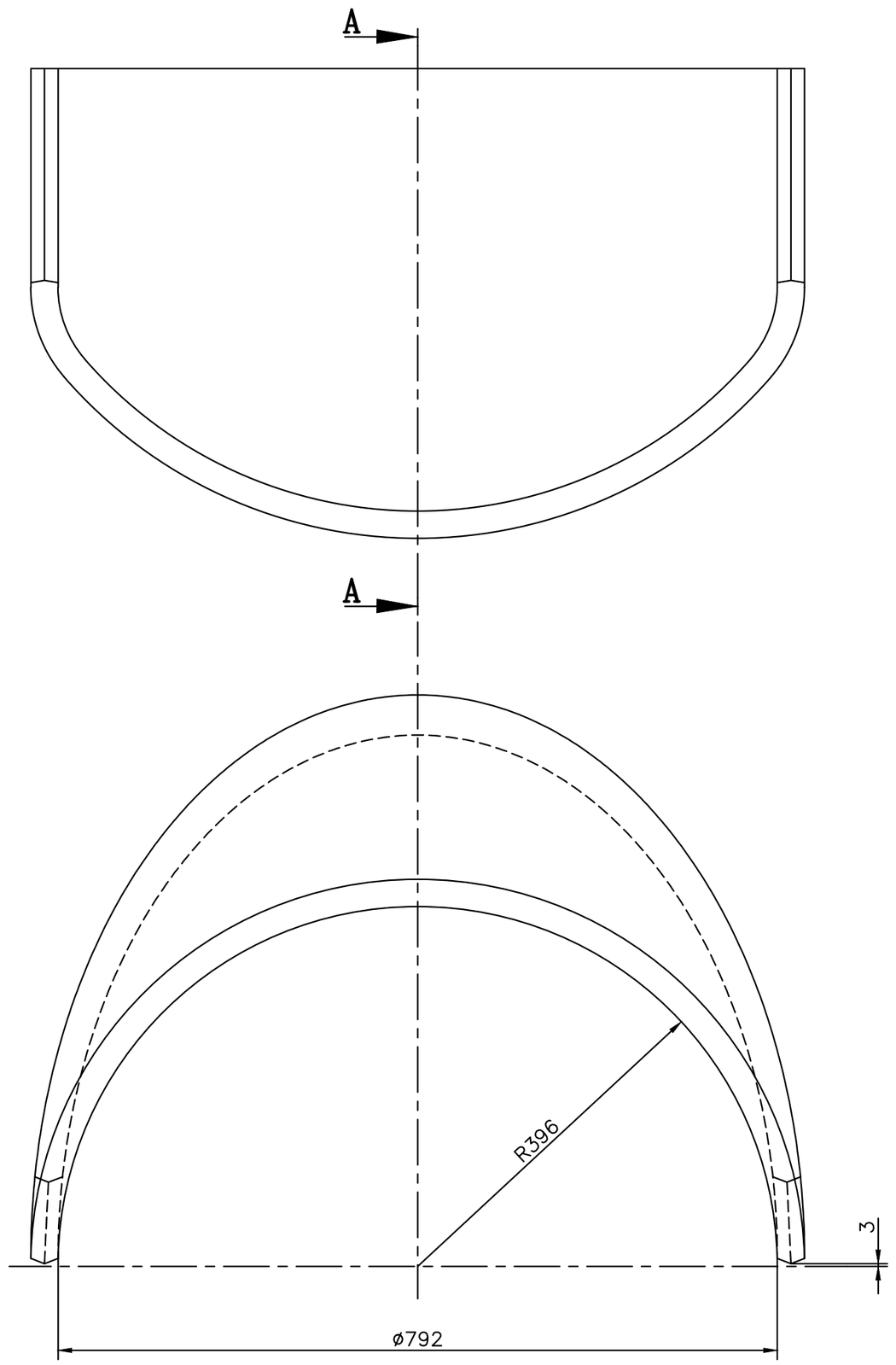

SECTION AA

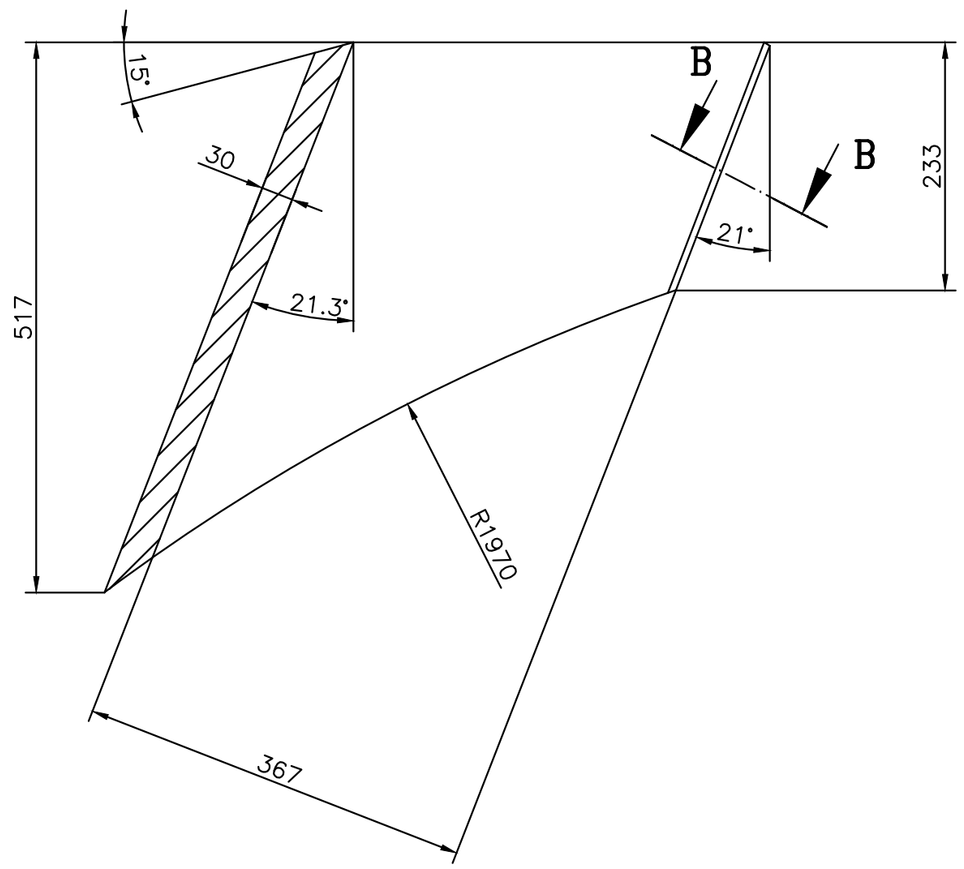

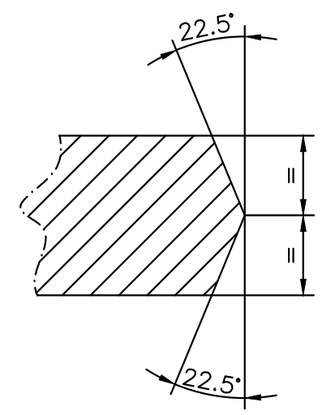

SECTION BB
SCALE 1:1

1:10

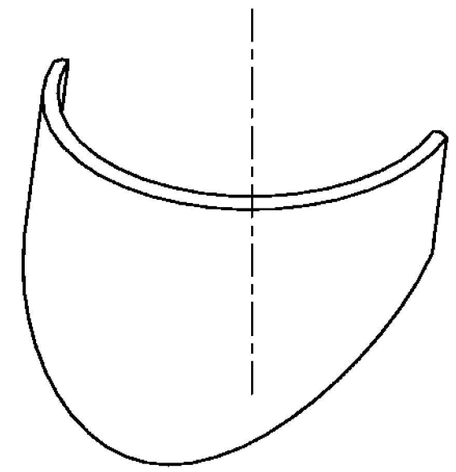

TECHINICAL REQUIREMENTS:-

1. IDENTIFICATION ACCORDING TO HW 0400397.

COPYRIGHT AND CONFIDENTIAL
THE INFORMATION ON THIS DOCUMENT IS THE PROPERTY OF BHARAT HEAVY ELECTRICALS LIMITED. IT MUST NOT BE USED DIRECTLY OR INDIRECTLY IN ANY WAY DETERMENTAL TO THE INTEREST OF THE COMPANY.

TIN NO. PSK046L659

Ref.Drawing No> DSPPG-0127040

Sign & Date

Inventory No.

~~GMS No./~~ CBOM No.			STATUS OF DRG
9-10742-58000			U
AGREED DEPT	NAME	SIGN	DATE
WT	H. VERMA	SD/-	28.07.12

GRADE OF UNTOL.DIM
M/CG.-C/M/~~F~~ AA023~~0~~208
WELDING-A/B/~~C~~/D / / AA0621104
GAS CUTTING-'T3'AA0621101

REV	DATE	ALTERED / CHECKED	REV	DATE	ALTERED / CHECKED	REV	DATE	ALTERED / CHECKED	REV	DATE	ALTERED / CHECKED	REV	DATE	ALTERED / CHECKED	REV	DATE	ALTERED / CHECKED

TYPE OF PRODUCT OR NAME OF CUSTOMER/PROJECT: STEAM TURBINE

BHARAT HEAVY ELECTRICALS LTD.
RANIPUR, HARDWAR

	NAME	SIGN	DATE
DRN	POONAM	SD/-	28.11.2011
CHD	DINESH	SD/-	01.12.2011
APPD	D.K.RAY	SD/-	

NO. OF VAR — 73 74

DEPT	STE	SCALE	WEIGHT (KG)	REF. TO ASSY. DRG.	ITEM No.	NO. OF ITEMS
CODE	4011	1:5	121.00	9-10742-58000	121	75 77

TITLE : PLATE

CARD CODE

DRAWING NO. 2-10742-58121 22 23 24

SHEET No. 01 No. OF SHEETS 02

SIZE A2

FIRST ANGLE PROJECTION (ALL DIMENSIONS ARE IN mm) FORM DG 44(B)

DRAWING No. 2-10742-58104

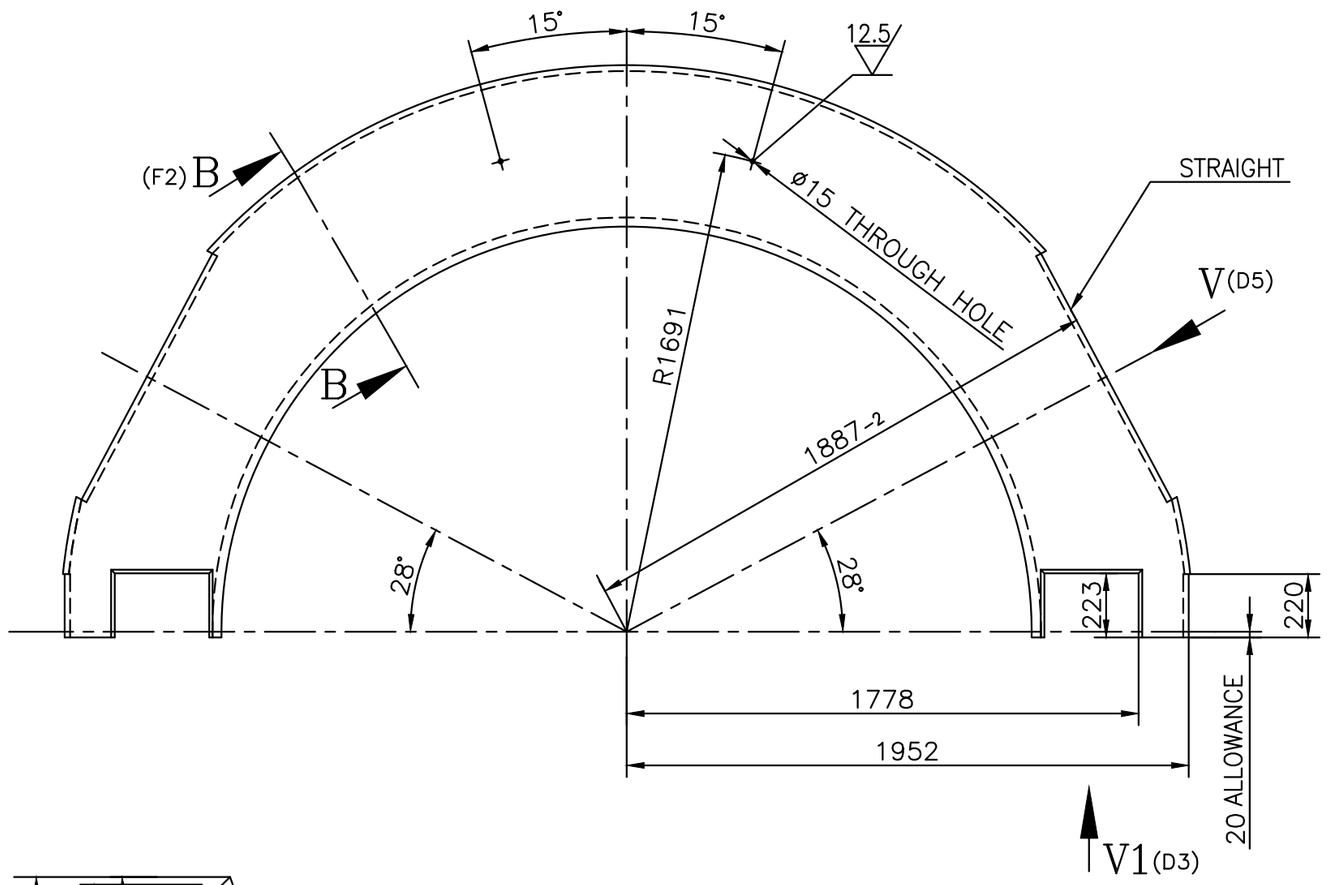

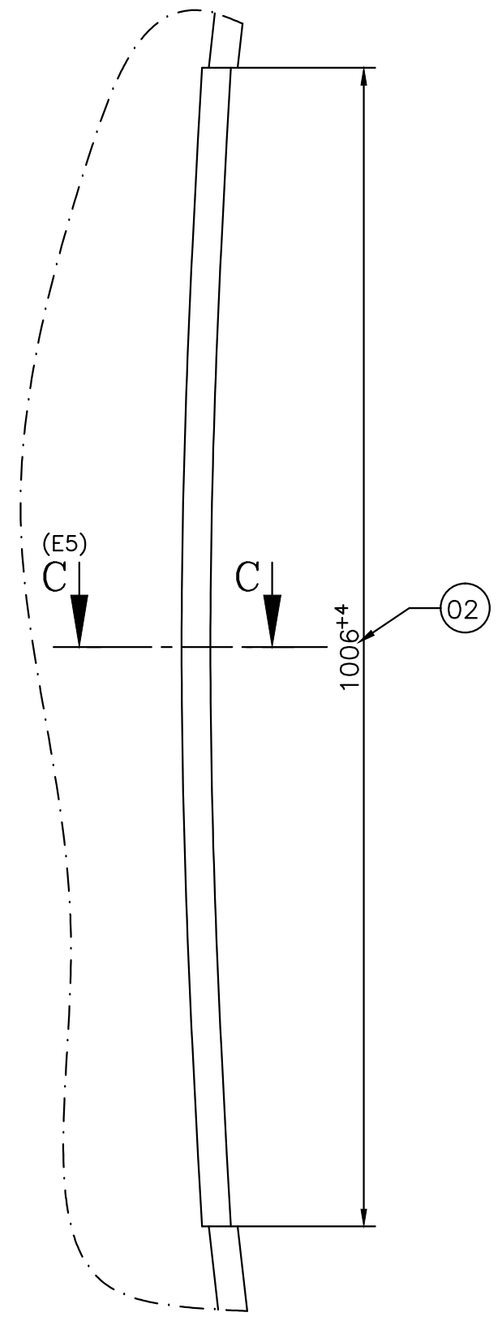

VIEW V(A4)
SCALE 1:5

50 ALL OVER EXCEPT OTHERWISE STATED

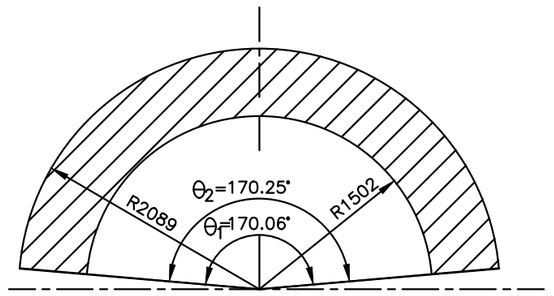

DEVELOPMENT OF CONE
SCALE 1:50

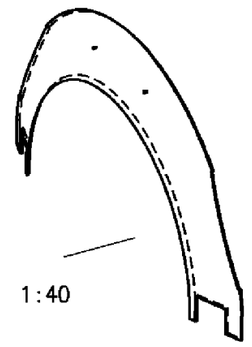

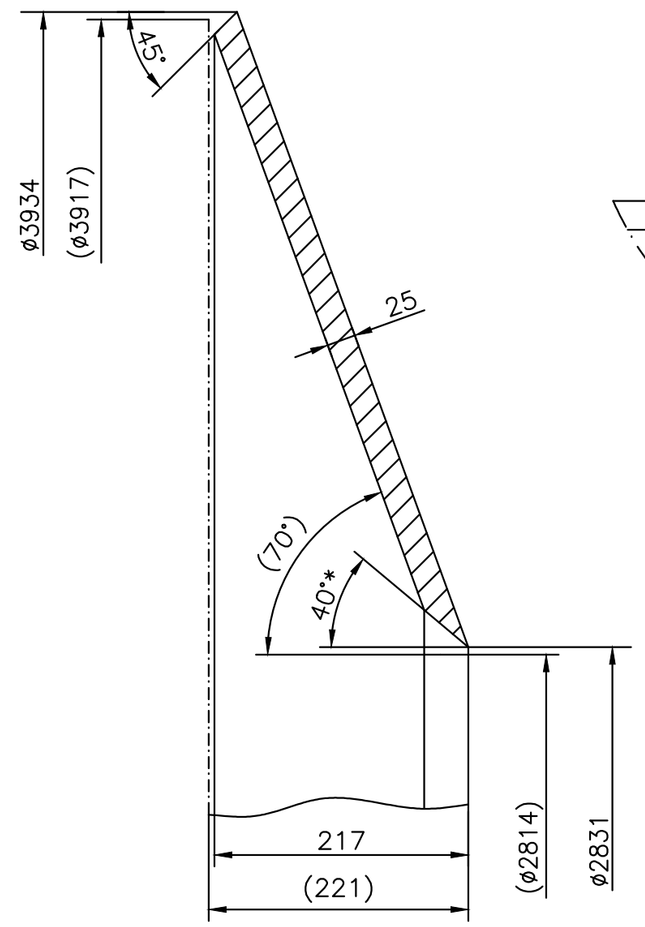

SECTION BB(A1)
SCALE 1:5

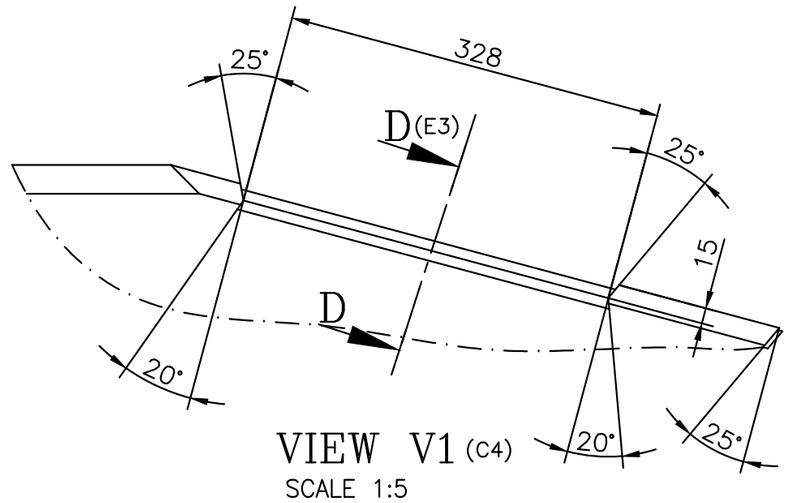

VIEW V1(C4)
SCALE 1:5

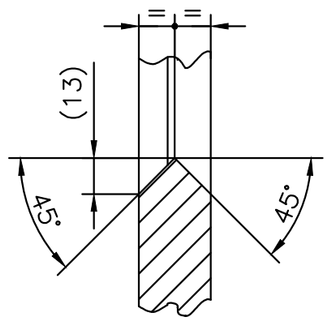

SECTION DD(C3)
SCALE 1:2

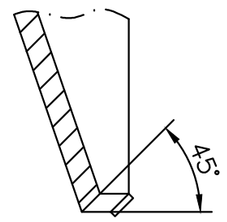

SECTION CC(B5)
SCALE 1:5

DIVIDED IN PARTS IF REQUIRED, ADDITIONAL LONGITUDINAL WELD SEAMS SHALL BE MADE AS FULL PENETRATION WELDS, PERFORMANCE DEPENDING ON WELD PROCEDURE OF SUPPLIER/SHOP.

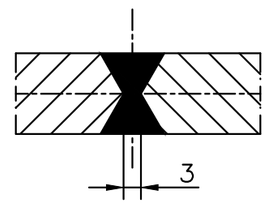

DETAIL: FULL PENETRATION WELD
WELD EDGE PREPARATION
ACC. TO ISO 9692-1/ISO 9692-2

TECHNICAL REQUIREMENTS:-

1. "*" IF REQUIRED, THE WELD EDGE PREPARATION COULD BE DONE ACCORDING TO ISO 9692-1.THE DRAWING REQUIREMENTS (E.G. WELD QUALITY, FULL PENETRATION, BUTT WELD,FILLET WELD) MUST BE CONSIDERED.
2. WELD CLASSIFICATION GROUP ACCORDING TO HW0620099:BS/BK.
3. WELDING TEST SCOPE ACCORDING TO HW0850199. CSR-1.
4. IDENTIFICATION ACCORDING TO HW0400397

GRADE OF UNTOL.DIM	
M/CG.-C/M/F AA023Ø208	
WELDING-A/B/C/D / / AA0621104	
GAS CUTTING-'T3'AA0621101	

REV	DATE		
02	27.01.15	ALTERED	ANOOP
		CHECKED	DINESH

IN SHEET NO.1 VIEW V DIM. 1006O+4 TO CORRECTED DIM. 1006+4.

AS PER C\A NO. STE-15-F0028.

REV	DATE		
01	25.05.13	ALTERED	MONIKA
		CHECKED	DINESH

DATE & NO. OF SHEET UPDATED INSERT NEW SHEET.

AS PER C\A NO. STE-13-F0205.

~~GMS No./~~ CBOM No. 9-10742-58000			STATUS OF DRG U
AGREED DEPT	NAME	SIGN	DATE
WT	H. VERMA	SD/-	28.07.12

TYPE OF PRODUCT OR NAME OF CUSTOMER/PROJECT: STEAM TURBINE

BHARAT HEAVY ELECTRICALS LTD.
RANIPUR, HARDWAR

	NAME	SIGN	DATE
DRN	POONAM	SD/-	28.11.2011
CHD	DINESH	SD/-	01.12.2011
APPD	D.K.RAY	SD/-	28.07.12

NO. OF VAR —

DEPT	STE	SCALE	WEIGHT (KG)	REF. TO ASSY. DRG.	ITEM No.	NO. OF ITEMS
CODE	4011	1:20	532.00	9-10742-58000	104	—

TITLE : HALF CONE

CARD CODE

DRAWING NO. 2-10742-58104

SHEET No. 1 No. OF SHEETS 2

SIZE A2

COPYRIGHT AND CONFIDENTIAL
THE INFORMATION ON THIS DOCUMENT IS THE PROPERTY OF BHARAT HEAVY ELECTRICALS LIMITED. IT MUST NOT BE USED DIRECTLY OR INDIRECTLY IN ANY WAY DETERMENTAL TO THE INTEREST OF THE COMPANY.

TIN NO. PSK046L652
Ref.Drawing No> DSPPG-0127020
Sign & Date
Inventory No. PSK046L652

FIRST ANGLE PROJECTION

(ALL DIMENSIONS ARE IN mm)

DRG. NO. 1-10742-58211

50 ALL OVER EXCEPT OTHERWISE STATED

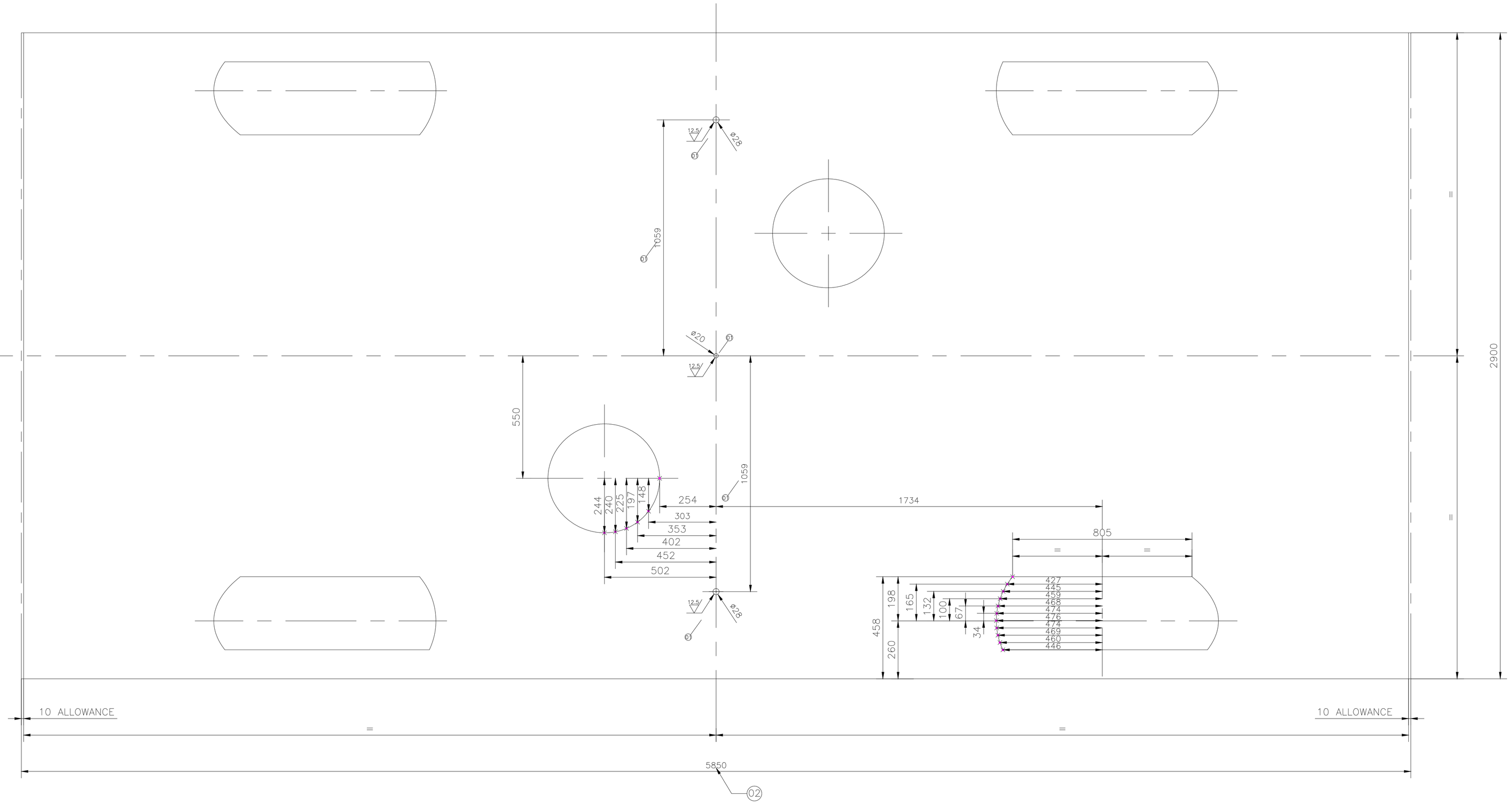

DEVELOPMENT OF ENCLOSURE PLATE

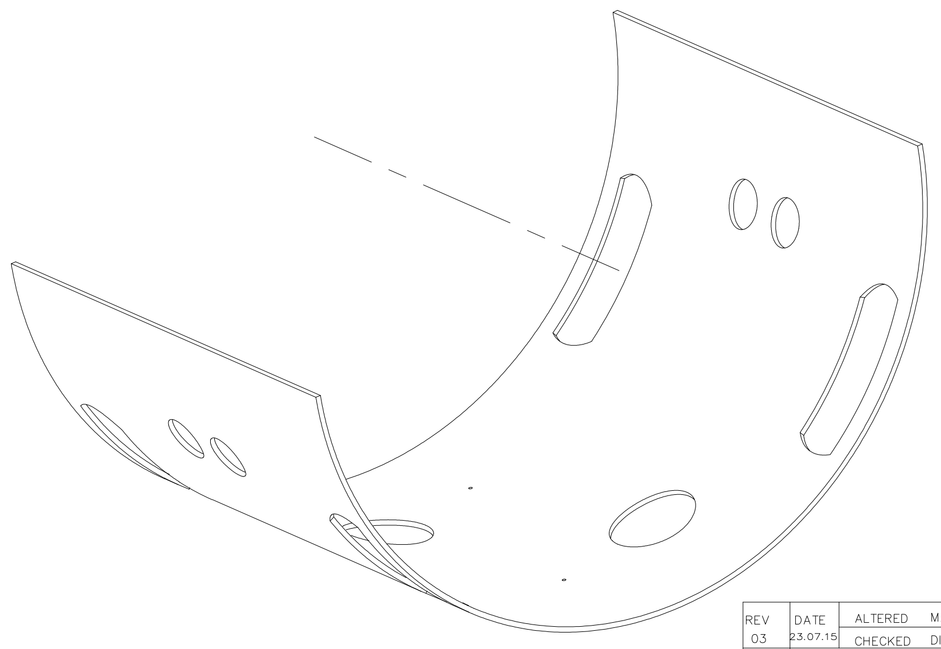

~~GMS No.~~/ C.B.O.M.– NO. 9–10742–58000				STATUS OF DRG U
AGREED DEPT	NAME	SIGN	DATE	
BTX	H. VERMA	–SD/–	28.07.12	

TYPE OF PRODUCT STEAM TURBINE

OR

NAME OF CUSTOMER/PROJECT

GRADE OF UNTOL.DIM

M/CG.–¢/M/₣ AA0230208

WELDING–#/B/¢/D AA0621104

GAS CUTTING–'T3'AA0621101

BHARAT HEAVY ELECTRICALS LTD.
RANIPUR, HARDWAR

	NAME	SIGN	DATE
DRN	AFZAL KHAN	–SD/–	18.07.2012
CHD	DINESH	–SD/–	19.07.2012
APPD	D.K.RAY	–SD/–	29.07.2012

NO. OF VAR — 73 74

REV	DATE	ALTERED MANOJ / CHECKED DINESH	REV	DATE	ALTERED ANOOP / CHECKED DINESH	REV	DATE	ALTERED MONIKA / CHECKED DINESH
03	23.07.15	NO CHANGE IN SHEET NO.2 AS PER C/A NO. STE–15–F0245.	02	05.02.15	1.IN SHEET NO.2 MAIN VIEW DIM.6239 CHANGE TO DIM.5850. AS PER C/A NO. STE–15–F0042.	01	09.09.13	VIEW OF DEVELOPMENT OF ENCLOSURE PLATE TO BE MODIFIED. AS PER C/A NO. STE–13–F305.

DEPT STE

CODE 4011

SCALE 1:10

WEIGHT (KG) ——

REF. TO ASSY. DRG. 9–10742–58000

ITEM No. 211

NO. OF ITEMS — 75 77

TITLE : ENCLOSURE PLATE

CARD CODE 7

DRAWING NO. 1–10742–58211 22 23 24

SHEET No. 02 No. OF SHEETS 02

A1 SIZE

THE INFORMATION ON THIS DOCUMENT IS THE PROPERTY OF BHARAT HEAVY ELECTRICALS LIMITED.
IT MUST NOT BE USED DIRECTLY OR INDIRECTLY IN ANY WAY DETRIMENTAL TO THE INTREST OF THE COMPAY

INVENTORY NO | SIGN. AND DATE | REF. DRG. NO. DSPPG–012702B | TIN NO. PSK046L672

FIRST ANGLE PROJECTION

(ALL DIMENSIONS ARE IN mm)

DRG. NO 1-10742-58211

50 ALL OVER EXCEPT OTHERWISE STATED

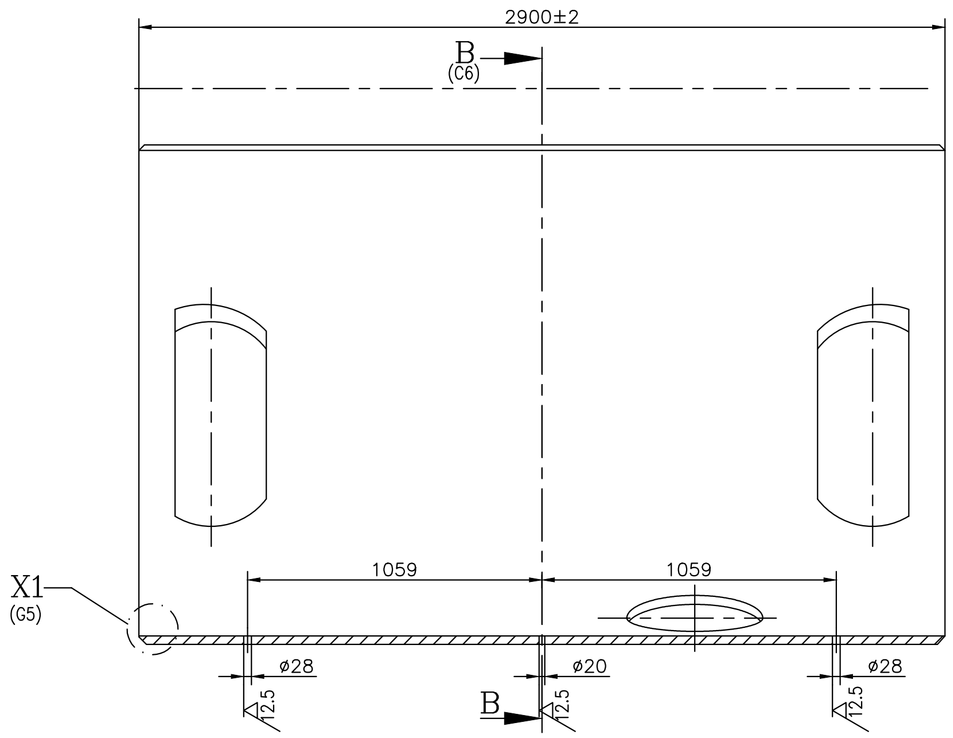

SECTION AA (A7)

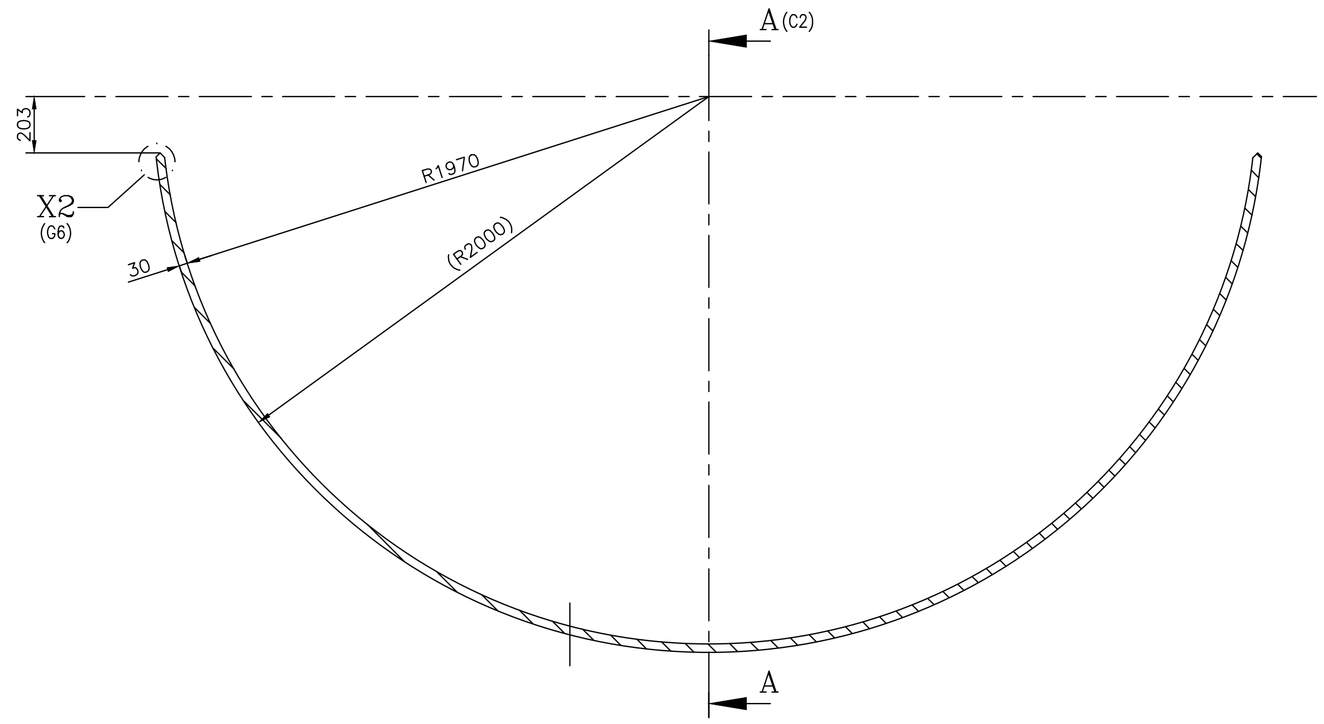

SECTION BB (A1)

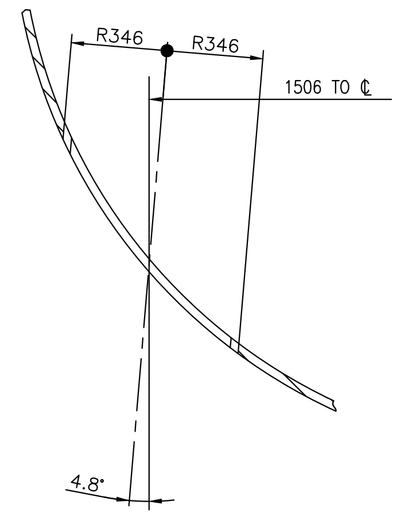

SECTION FF (E3)

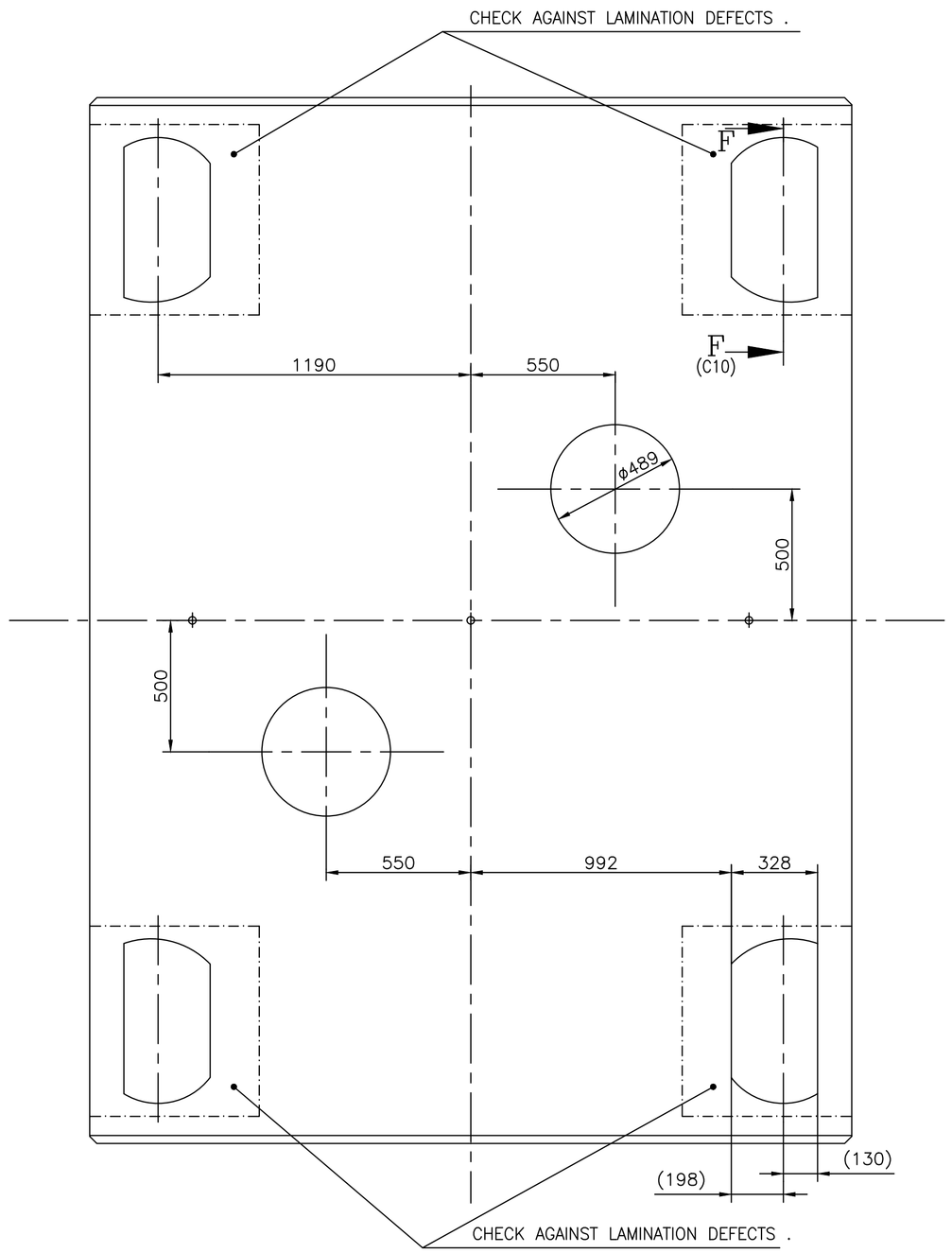

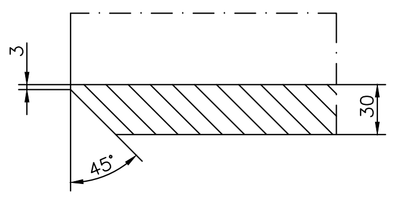

DETAIL X1 (C1)
SCALE 1:2.5

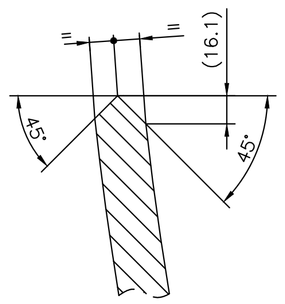

DETAIL X2 (A4)
SCALE 1:2.5

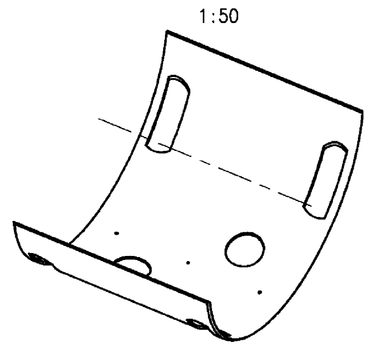

DIVIDED IN PARTS IF REQUIRED, ADDITIONAL LONGITUDINAL WELD SEAMS SHALL BE MADE AS FULL PENETRATION WELDS, PERFORMANCE DEPENDING ON WELD PROCEDURE OF SUPPLIER/SHOP.

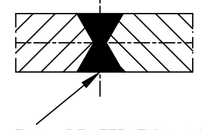

DETAIL: FULL PENETRATION WELD
WELD EDGE PREPARATION
ACC. TO ISO 9692-1/ISO 9692-2

TECHNICAL REQUIREMENTS:-

1. WELD CLASSIFICATION GROUP ACCORDING TO HW0620099:BS/BK.
2. WELDING TEST SCOPE ACCORDING TO HW0850199. CSR-1.
3. IDENTIFICATION ACCORDING TO HW0400397

GRADE OF UNTOL.DIM
M/CG.-℄/M/# AA0230208
WELDING-#/B/℄/D AA0621104
GAS CUTTING-'T3'AA0621101

GMS No./ C.B.O.M.- NO.			STATUS OF DRG
9-10742-58000			
AGREED DEPT	NAME	SIGN	DATE
WT	H. VERMA	Sd/-	28.07.12

REV	DATE	ALTERED / CHECKED	
03	23.07.15	ALTERED MANOJ / CHECKED DINESH	WEIGHT 3546 CHANGE TO 3327 AS PER C/A NO. STE-15-F0245.
02	05.02.15	ALTERED ANOOP / CHECKED DINESH	NO CHANGE. AS PER C/A NO. STE-15-F0042.
01	09.09.13	ALTERED MONIKA / CHECKED DINESH	NO CHANGE. AS PER C/A NO. STE-13-F305.

TYPE OF PRODUCT OR NAME OF CUSTOMER/PROJECT: STEAM TURBINE

BHARAT HEAVY ELECTRICALS LTD.
RANIPUR, HARDWAR

	NAME	SIGN	DATE
DRN	POONAM	-sd-	29.11.11
CHD	DINESH	-sd-	01.12.11
APPD	D.K.RAY	-sd-	29.07.12

NO. OF VAR: -

DEPT STE	SCALE	WEIGHT (KG)	REF. TO ASSY. DRG.	ITEM No.	NO. OF ITEMS
CODE 4011	1:15	3327.00	9-10742-58000	211	75 77

TITLE : ENCLOSURE PLATE

CARD CODE

DRAWING NO. 1-10742-58211 (7 22 23 24)

SHEET No. 01 | No. OF SHEETS 02

A1 SIZE

THE INFORMATION ON THIS DOCUMENT IS THE PROPERTY OF BHARAT HEAVY ELECTRICALS LIMITED.
IT MUST NOT BE USED DIRECTLY OR INDIRECTLY IN ANY WAY DETRIMENTAL TO THE INTREST OF THE COMPAY

INVENTORY NO | SIGN. AND DATE | REF. DRG. NO. DSPPG-0127028 | TIN NO. PSK046L672

FIRST ANGLE PROJECTION

(ALL DIMENSIONS ARE IN mm)

DRG. NO. 1-10742-58101

50 ALL OVER EXCEPT OTHERWISE STATED

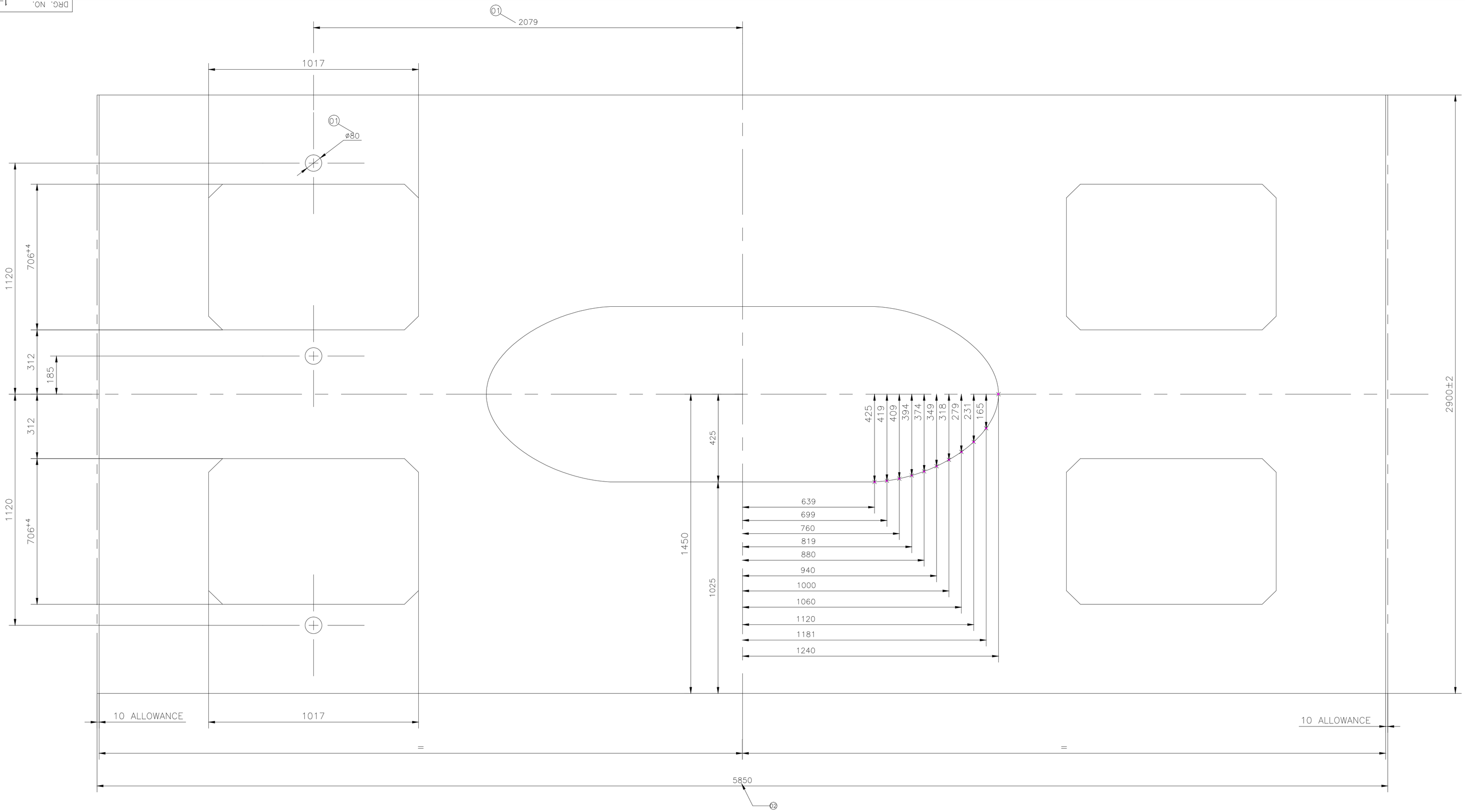

DEVELOPMENT OF ENCLOSURE PLATE

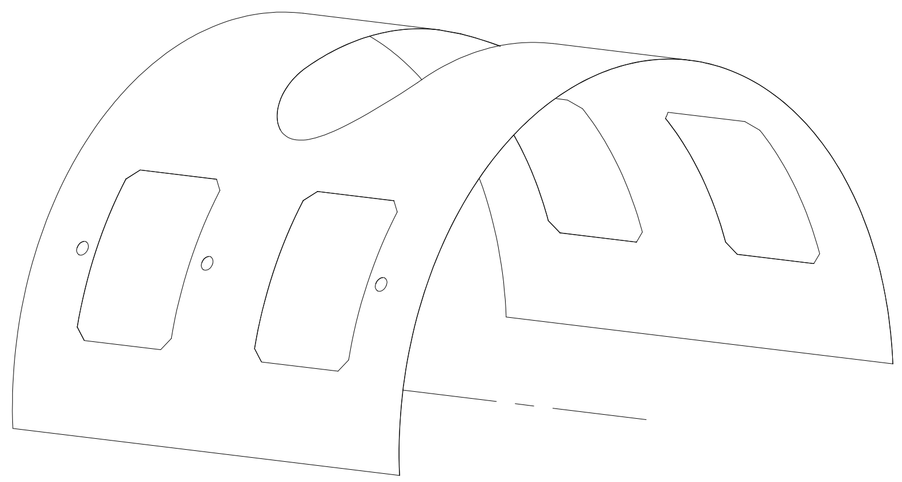

THE INFORMATION ON THIS DOCUMENT IS THE PROPERTY OF BHARAT HEAVY ELECTRICALS LIMITED.
IT MUST NOT BE USED DIRECTLY OR INDIRECTLY IN ANY WAY DETRIMENTAL TO THE INTREST OF THE COMPAY

INVENTORY NO	SIGN. AND DATE	REF. DRG. NO.	TIN NO.
		DSPPG-012017	PSK046L645

REV	DATE	ALTERED / CHECKED

REV	DATE	ALTERED / CHECKED	
02	05.02.15	ALTERED	ANOOP
		CHECKED	DINESH

1. IN SHEET NO.2 MAIN VIEW DIM.6253 CHANGE TO DIM.5850.

AS PER C\A.NO. STE-15-F0042.

REV	DATE	ALTERED / CHECKED	
01	6.03.13	ALTERED	MONIKA
		CHECKED	DINESH

ø 80 & DIM. 2079 GIVEN.

AS PER C\A.NO. STE-13-F0139.

GRADE OF UNTOL.DIM

M/CG.-¢/M/F AA0230208

WELDING-A/B/¢/D AA0621104

GAS CUTTING-'T3'AA0621101

~~GMS No.~~/ C.B.O.M.- NO.	STATUS OF DRG
9-10742-58000	D

AGREED DEPT	NAME	SIGN	DATE
WT	H. VERMA	-SD/-	28.07.12

TYPE OF PRODUCT STEAM TURBINE

OR

NAME OF CUSTOMER/PROJECT

BHARAT HEAVY ELECTRICALS LTD.
RANIPUR, HARDWAR

	NAME	SIGN	DATE	NO. OF VAR
DRN	AFZAL KHAN	-SD/-	18.07.2012	
CHD	DINESH	-SD/-	19.07.2012	
APPD	D.K.RAY	-SD/-	23.08.2012	73 74

DEPT	SCALE	WEIGHT (KG)	REF. TO ASSY. DRG.	ITEM No.	NO. OF ITEMS
STE	1:10	2758	9-10742-58000	101	75 77
CODE 4011					

TITLE : ENCLOSURE PLATE

CARD CODE

DRAWING NO. 1-10742-58101 (7 22 23 24)

SHEET No. 02 No. OF SHEETS 02

A1 SIZE

FIRST ANGLE PROJECTION

(ALL DIMENSIONS ARE IN mm)

DRG. NO. 1-10742-58101

50 ALL OVER EXCEPT OTHERWISE STATED

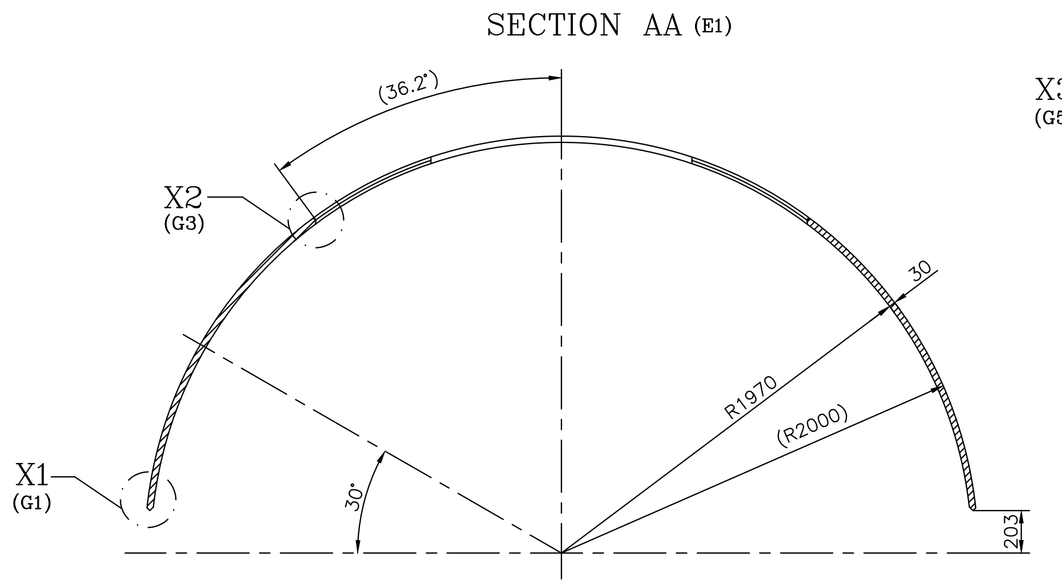

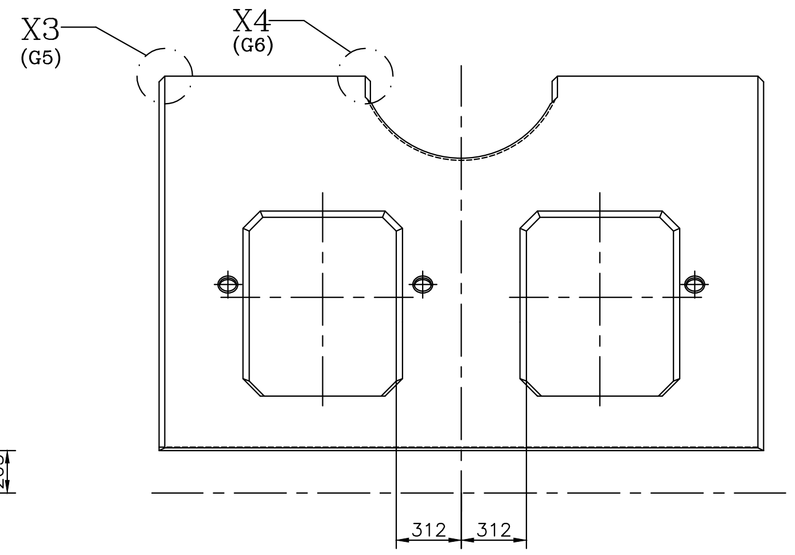

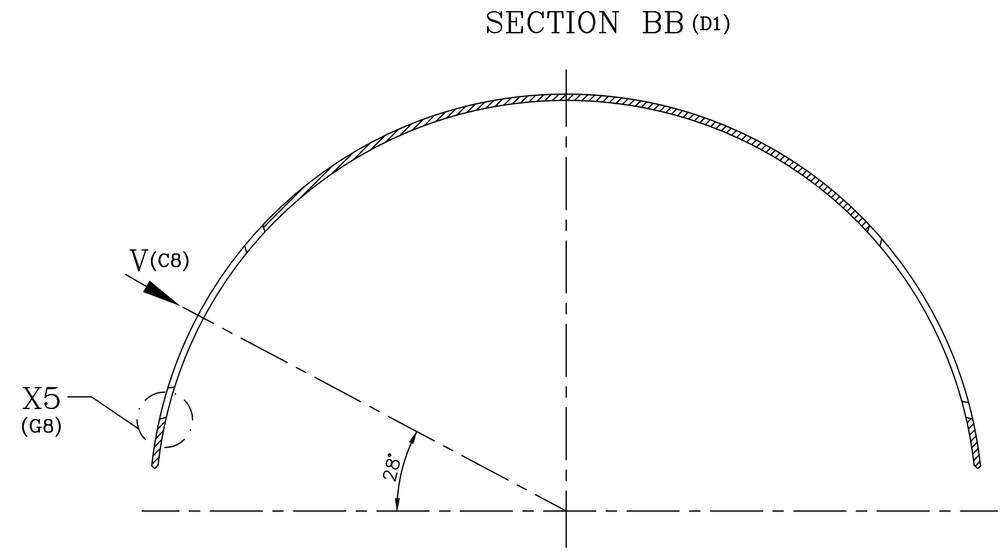

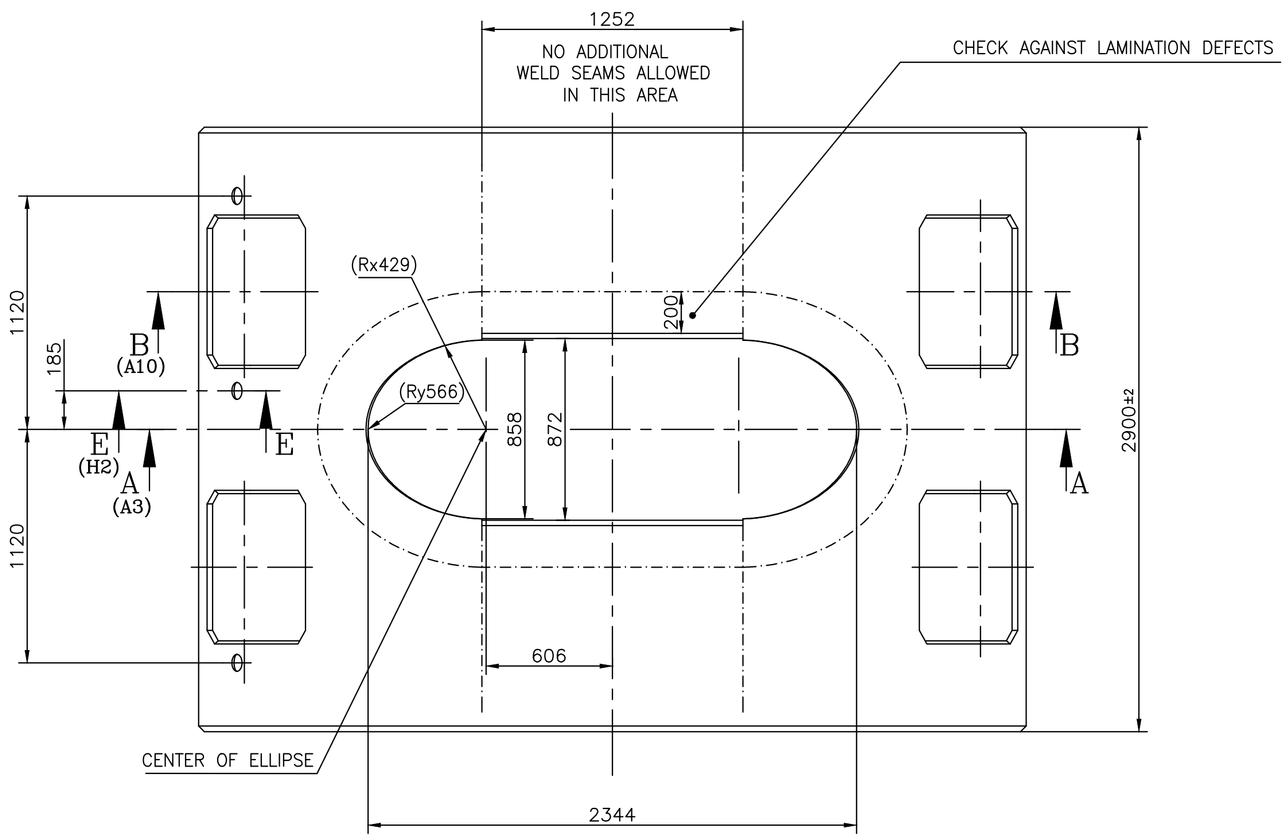

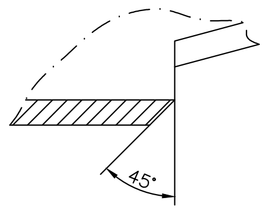

SECTION CC (D7)
SCALE 1.5

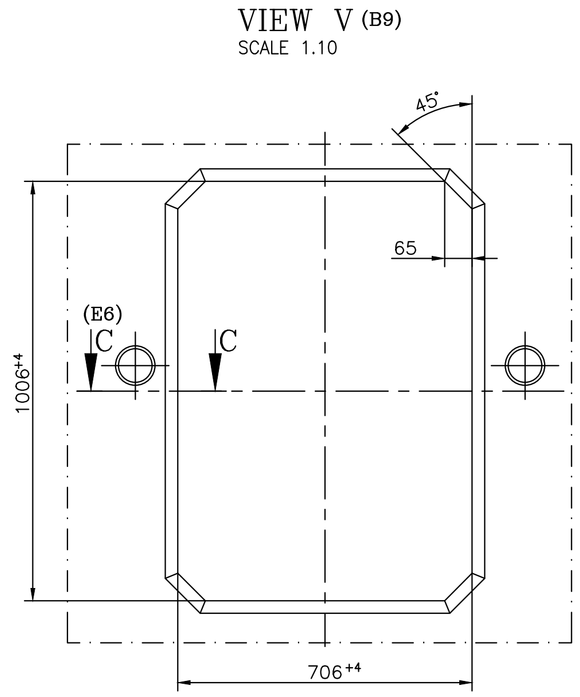

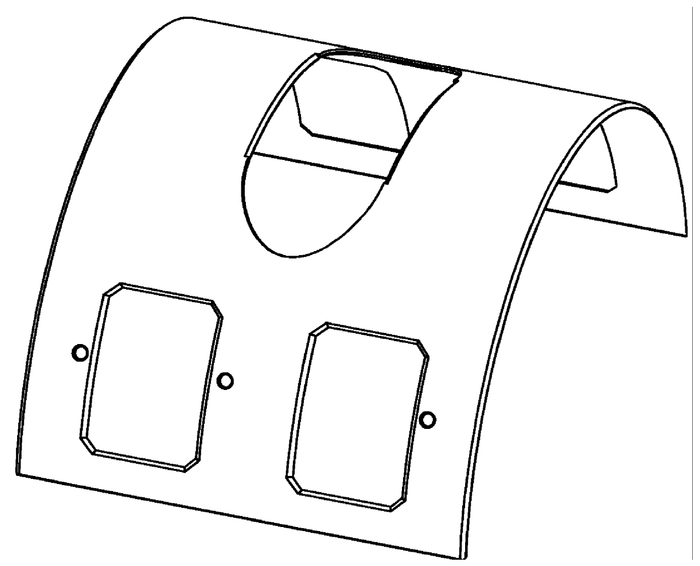

DIVIDED IN PARTS IF REQUIRED, ADDITIONAL LONGITUDINAL WELD SEAMS SHALL BE MADE AS FULL PENETRATION WELDS, PERFORMANCE DEPENDING ON WELD PROCEDURE OF SUPPLIER/SHOP.

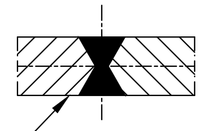

DETAIL: FULL PENETRATION WELD
WELD EDGE PREPARATION
ACC. TO ISO 9692-1/ISO 9692-2

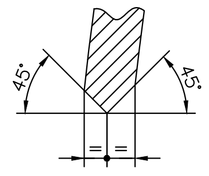

DETAIL X1 (B1)
SCALE 1.2.5

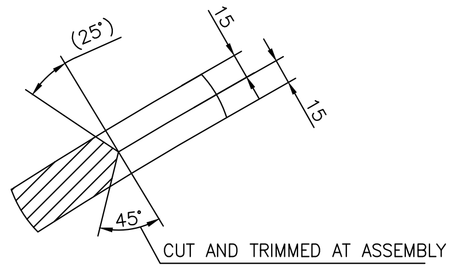

DETAIL X2 (A2)
SCALE 1.2.5

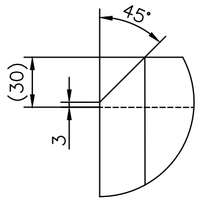

DETAIL X3 (A5)
SCALE 1.2.5

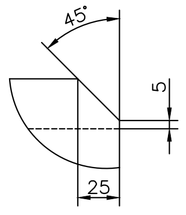

DETAIL X4 (A6)
SCALE 1.2.5

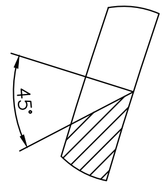

DETAIL X5 (B8)
SCALE 1.2.5

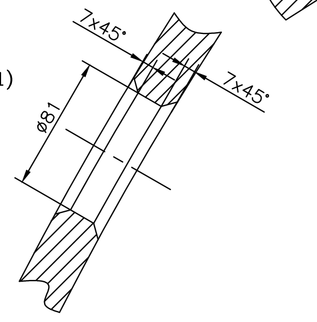

SECTION E-E (E1)
SCALE 1:5

→ DEPENDING ON SEMI-FNISHED PARTS THE NUMBER OF LONGITUDINAL WELD SEAMS SHALL BE MINIMIZED.

→ IN ACCORDANCE TO MAIN DRAWING OF DESIGN GROUP INTERSECTION OF WELD SEAMS SHALL BE AVOIDED.

TECHNICAL REQUIREMENTS:-

1. WELD CLASSIFICATION GROUP ACCORDING TO HW0620099:BS/BK.
2. WELDING TEST SCOPE ACCORDING TO HW0850199. CSR-1.
3. IDENTIFICATION ACCORDING TO HW0400397

GRADE OF UNTOL.DIM	
M/CG.-C/M/F	AA0230208
WELDING-A/B/C/D/	AA0621104
GAS CUTTING-'T3'	AA0621101

~~GMS No.~~ C.B.O.M.- NO. 9-10742-58000 — STATUS OF DRG U

AGREED DEPT	NAME	SIGN	DATE
WT	H. VERMA	SD/-	28.07.12

REV	DATE	ALTERED	REV	DATE	ALTERED	REV	DATE	ALTERED
		CHECKED	02	05.02.15	CHECKED DINESH	01	6.03.13	CHECKED DINESH
				1. IN SHEET NO.1 NO CHANGE. AS PER C\A.NO. STE-15-F0042.				ANOOP / MONIKA; SH2 ø 80 & DIM. 2079 GIVEN. AS PER C\A.NO. STE-13-F0139.

TYPE OF PRODUCT: STEAM TURBINE
OR
NAME OF CUSTOMER/PROJECT

BHARAT HEAVY ELECTRICALS LTD.
RANIPUR, HARDWAR

	NAME	SIGN	DATE
DRN	POONAM	SD/-	18.07.2012
CHD	DINESH	SD/-	19.07.2012
APPD	D.K.RAY	SD/-	23.08.2012

NO. OF VAR — 73 74

DEPT STE
CODE 4011

SCALE 1:20 | WEIGHT (KG) 2758.00 | REF. TO ASSY. DRG. 9-10742-58000 | ITEM No. 101 | NO. OF ITEMS — 75 77

TITLE: ENCLOSURE PLATE

CARD CODE

DRAWING NO. 1-10742-58101 — 22 23 24

SHEET No. 01 | No. OF SHEETS 02

AI SIZE

THE INFORMATION ON THIS DOCUMENT IS THE PROPERTY OF BHARAT HEAVY ELECTRICALS LIMITED.
IT MUST NOT BE USED DIRECTLY OR INDIRECTLY IN ANY WAY DETRIMENTAL TO THE INTREST OF THE COMPAY

TIN NO. PSK0046L645 | REF. DRG. NO. DSPPG-0127017 | SIGN. AND DATE | INVENTORY NO

FIRST ANGLE PROJECTION (ALL DIMENSIONS ARE IN mm) FORM DG 44(B)

DRAWING NO. 2-10742-58104

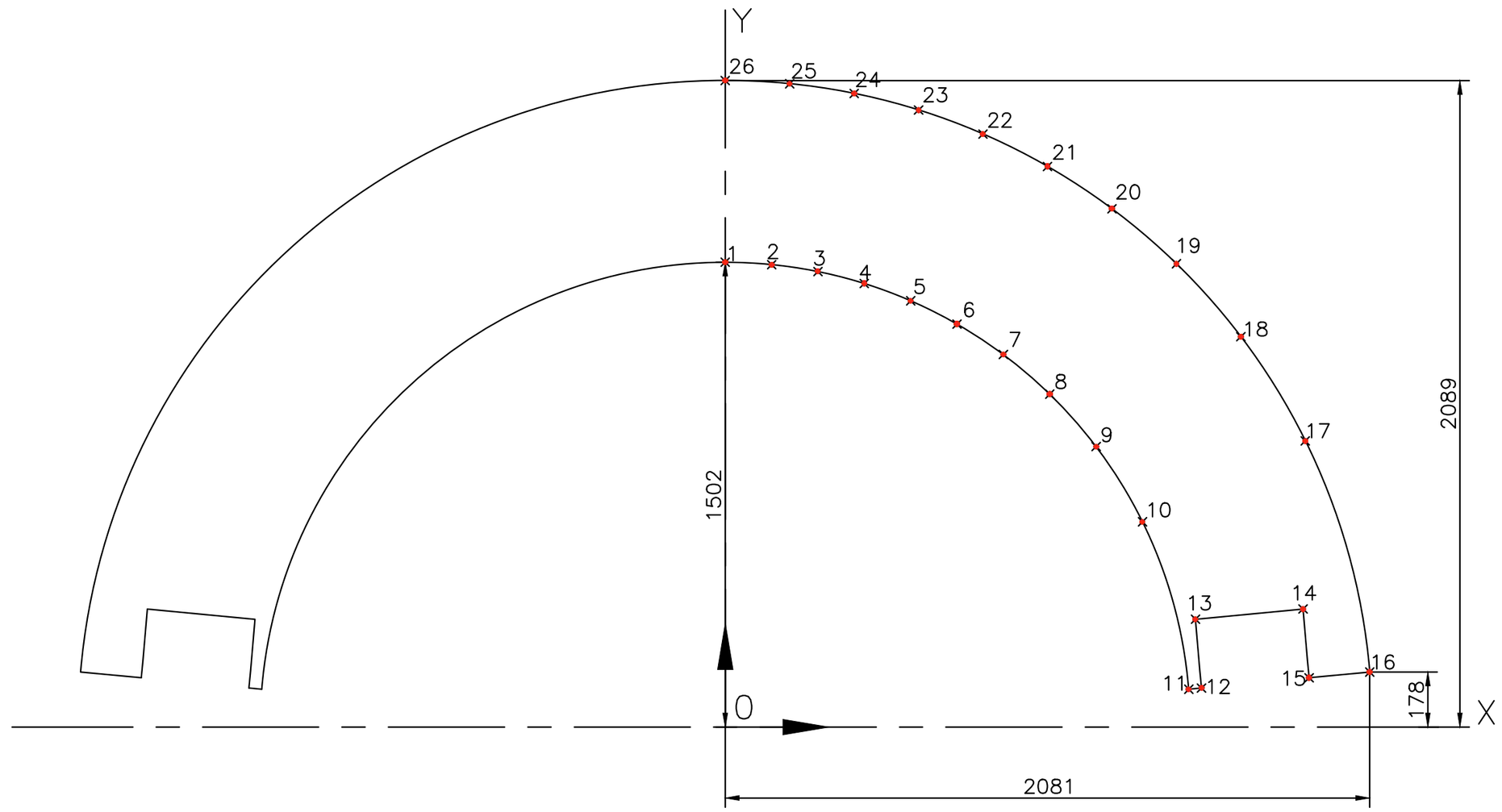

DEVELOPMENT OF CONE

SCALE 1:50

SL. NO.	CO-ORDINATES X	CO-ORDINATES Y
0	0	0
1	0	1502
2	151	1494
3	299	1471
4	449	1433
5	599	1377
6	749	1302
7	898	1203
8	1048	1075
9	1198	906
10	1347	663
11	1497	122
12	1538	126
13	1518	348
14	1866	381
15	1885	159
16	2081	178
17	1873	924
18	1665	1261
19	1457	1497
20	1249	1674
21	1040	1811
22	832	1915
23	624	1993
24	416	2047
25	208	2078
26	0	2089

COPYRIGHT AND CONFIDENTIAL
THE INFORMATION ON THIS DOCUMENT IS THE PROPERTY OF BHARAT HEAVY ELECTRICALS LIMITED. IT MUST NOT BE USED DIRECTLY OR INDIRECTLY IN ANY WAY DETRIMENTAL TO THE INTEREST OF THE COMPANY.

TIN NO. PSK046L652

Ref.Drawing No> DSPPG-0127020

Sign & Date

Inventory No. PSK046L652

GRADE OF UNTOL.DIM	
M/CG.-C/M/F AA0230208	
WELDING-A/B/C/D / / AA0621104	
GAS CUTTING-'T3'AA0621101	
REV 02	DATE 27.01.15 ALTERED ANOOP CHECKED DINESH
	NO CHANGE. AS PER C\A NO. STE-15-F0028.

~~GMS No./~~ CBOM No. 9-10742-58000			STATUS OF DRG U
AGREED DEPT	NAME	SIGN	DATE

REV	DATE	ALTERED / CHECKED
01	25.05.13	ALTERED MONIKA CHECKED DINESH

DATE & NO. OF SHEET UPDATED INSERT NEW SHEET. AS PER C\A NO. STE-13-F0205.

TYPE OF PRODUCT OR NAME OF CUSTOMER/PROJECT: STEAM TURBINE

BHARAT HEAVY ELECTRICALS LTD. RANIPUR, HARDWAR

	NAME	SIGN	DATE
DRN	AFZAL KHAN	SD/-	02.03.2013
CHD	DINESH	SD/-	04.03.2013
APPD	D.K.RAY	SD/-	05.03.2013

NO. OF VAR —

DEPT STE

CODE 4011

SCALE 1:15

WEIGHT (KG)

REF. TO ASSY. DRG. 9-10742-58000

ITEM No. 104

NO. OF ITEMS —

TITLE : HALF CONE

CARD CODE

DRAWING NO. 2-10742-58104

SHEET No. 02 No. OF SHEETS 02

SIZE A2

ANNEXURE- VI

(Quality Plan)

Manufacturer's Name & Address	QUALITY PLAN	Contractor:- BHEL Haridwar Indent no. 20170478 Rev 01 dated 04.12.17
BHEL, haridwar approved sub-contractors only	Item:- LP Inner casing (Fabrication) QAP No. :- QP/QA/170058 Rev. 00 Date: 05.12.17 Page 1 of 1	

Sl. No	Component Operation	Characteristics	Class	Type Of Check	Quantum Of Check	Reference Documents	Acceptance Norms	Format Of Record	Agency				Remarks
									D	S	B	C	
1	Material Receiving Inspection	Material Receiving Inspection	Major	Visual inspection	100%	As per Drg./ CBOM	As per Drg./ CBOM	Q.no.	✔	P	V	-	For BHEL material, transfer of identification to be ensured.
2	Welding Operation	Visual inspection of weld	Major	Visual	100%	As per Drg.	As per Drg.	Obs. sheet	✔	P	W	-	
3	Stress relieving	Stress relieving	Major	HT	100%	As per Drg.	As per Drg.	Report	✔	-	P	-	Stress relieving shall be done at BHEL haridwar
4	Non destructive testing	UT/RT of butt welds	Major	NDT	10%	As per Drg.	As per Drg.	Report	✔	P	W / V	-	1)NDT to be carried out by qualified personnel in line with ASNT/ISNT Level I/II. 2)V in case of RT' W in - case of UT.
5		DPT of fillet welds	Major	NDT	10%	As per Drg.	As per Drg.	Report	✔	P	W	-	
6		DPT of lifting lugs	Major	NDT	100%	As per Drg.	As per Drg.	Report	✔	P	W	-	
7	Final inspection	Verification of dimension and visual inspection	Major	Visual and measurement	100%	As per Drg.	As per Drg.	Obs. Sheet	✔	P	W	-	Item shall be dispatched to BHEL after acceptance by BHEL/BHEL nominated agency after duly identifying by punching P.O.No., drg no. and I.R.No.
		Check for Identification, cleanliness and completeness of job	Major	Visual	100%	As per Drg.	As per Drg.			P	V	-	

Remarks:All requirements of Standards, P.O., and drawing to be fulfilled

05.12.17

Legend :-
D: documents with tick mark shall be submitted by Vendor to BHEL, Haridwar. , B: BHEL/BHEL Nominated inspection agency, S: Sub-contractor
C: Customer
P: Perform, W: Witnessed V: Records Verification./Review

For BHEL, haridwar
इन्द्र भुषण कुमार/I.B. Kumar
अभियन्ता/Engineer
गुणता आश्वासन/QAX
बी. एच. ई. एल. हरिद्वार
BHEL, Haridwar

ANNEXURE-VII

Certificate by Chartered Accountant on letter head

This is to Certify that M/s ……,
(hereinafter referred to as 'company') having its registered office at ……is registered under MSMED Act 2006, (Entrepreneur Memorandum No (Part- II) ……..dtd:……..,
Category:……..(Micro/Small).(copy enclosed).

Further verified form the Books of Accounts that the investment of the company as on date ……..as per MSMED Act 2006 is as follows:

1. **For Manufacturing Enterprises**: Investment in plant and machinery (i.e. original cost excluding land and building and the items specified by the Ministry of Small Scale Industries vide its notification No. S.O.1722(E) dated October 5, 2006:
   Rs……..Lacs
2. **For Service Enterprises**: Investment in equipment (original cost excluding land and building and furniture, fittings and other items not directly related to the service rendered or as may be notified under the MSMED act, 2006:
   Rs……Lacs

(Strike off whichever is not applicable)

The above investment of Rs ……Lacs is within permissible limit of Rs……. Lacs for ……..micro / small (Strike off which is not applicable) Category under MSMED Act 2006.

Or

The company has been graduated from its original category (Micro / Small) (**Strike off whichever is not applicable)** and the date of graduation of such enterprises from its original category is ……. (dd/mm/yyyy) which is within the period of 3 years from the date of graduation of such enterprises from its original category as notified vide S.O. No. 3322(E) dated 01.11.2013 published in the gazette notification dated 04.11.2013 by Ministry of MSME.

Date:

(Signature)
Name-
Membership Number-
Seal of Chartered Accountant

ANNEXURE-VIII

Process Compliance Form
(The bidders are required to print this on their company's letterhead and sign, stamp before faxing)

To
Name & Address of Service Provider
For Reverse Auction (Will be informed
Later)

Sub: Agreement to the Process related Terms and Conditions

Dear Sir,

This has reference to the Terms & Conditions for the Reverse Auction mentioned in the RFQ document for {Items} against BHEL enquiry/ RFQ no. **X/6620/2017/0478/C**.

This letter is to confirm that:

1) The undersigned is authorized official/ representative of the company to participate in RA and to sign the related documents.
2) We have studied the Reverse Auction Terms & Conditions and the Business rules governing the Reverse Auction as mentioned in your letter and confirm our agreement to them.
3) We also confirm that we have taken the training on the auction tool and have understood the functionality of the same thoroughly.
4) We also confirm that, in case we become L1 bidder, we will email/ fax the price confirmation & break up of our quoted price (including that of line items) as per ***Annexure - IX*** within **two** working days (of BHEL) after completion of RA event, besides sending the same by registered post/ courier both to M/s. BHEL and Service provider of Reverse Auction

We, hereby confirm that we will honor the Bids placed by us during the auction process.

With regards

Signature with company seal

Name –
Company / Organization
Designation within Company / Organization
Address of Company / Organization

- Sign this document and Fax it to Service provider of Reverse Auction at 24 Hrs prior to start of the Event.
- Attach a signed copy of the RFQ document along with the Agreement Form/ Process Compliance form and send to Service provider of Reverse Auction.

ANNEXURE-IX

RA price confirmation and breakup

To

Name & Address of Service Provider
For Reverse Auction (Will be informed
Later)

CC: M/s BHEL
Heavy Electricals Equipment Plant, Haridwar

Sub: **Final price quoted during Reverse Auction and price breakup**

Dear Sir,

We confirm that we have quoted.

Rs.{_____} for item covered under tender enquiry No. X/6620/2017/0478/C.

Total price of the items covered under above cited enquiries is inclusive of {*Packing & forwarding,GST, freight and insurance charges up to BHEL Haridwar District Haridwar state-Uttarakhand and Type Test Charges etc., (exclusive of service tax)*, *other as per NIT*}

as our final landed prices as quoted during the Reverse Auction conducted today {*date*} which will be valid for a period of 60 days.

The price break-up including that of line items is as given below.

		========
Total	-Rs.	
		========

Thanking you and looking forward to the valuable order from BHEL.

Yours sincerely,

For _____

Name: Company:
Date:
Seal:

ANNEXURE- X

TERMS & CONDITIONS OF ENQUIRY
(Fabrication of LP Inner Casing -FAB- 800 MW)

1. <u>SCOPE OF WORK</u> :-

1.1 Complete Fabrication including Pre-Fabrication machining ***<u>as per BHEL drawings</u>*** and conforming to their technical requirements with BHEL Material for

1) LP Inner Casing-FAB – Drg. No. - 01074158700-00 Qty. - 3 nos.

Note: After placement of order no technical deviation will be given.

1.2 Supply Scope: Total material will be supplied by BHEL and

(i) Supplier shall fabricate diffuser drg no. -01076258001-00 (item no. 101-1), LP inner casing inlet part drg no. 91074258500-00 (item no. 102) of CBOM no. 01074158700-00.
(ii) All pre-fabrication machining will be done by supplier.
(iii) It may be noted that diffuser fabrication Drg. No. 01076258001-00 after machining will become Drg. No. 01076258000-00.
(iv) Total Fabrication Weight of one Diffuser = 10829.9 Kg
(v) Supplier will send fabricated diffuser Drg. No. 01076258001-00 for S/R to BHEL. Cleaning of diffuser after S/R will be done by supplier. Machining of diffuser will be done by BHEL. After machining diffuser shall be returned to supplier for NDT & final assembly.
(vi) LP Inner part (U/H), shall be delivered to BHEL within 20 days after receiving of both diffuser of a turbine at supplier's place.
(vii) LP Inner part (L/H) shall be delivered to BHEL within 30 days after receiving of both diffuser of a turbine at supplier's place.
(viii) Final S/R of LP Casing- FAB shall be done at BHEL.
(ix) Final cleaning & NDT of LP inner casing-FAB after S/R shall be done by supplier.
(x) Item no- 3 of drg 01076258001 & item no.-152 of drg 91074258500-00 are Not in suppliers' scope
(xi) Item No. 104, 105, 118, 206, 221 & 222 of CBOM 01076258001-00 shall be supplied in BLANK condition by BHEL to the supplier.
(xii) Item no. -102 & 202 of CBOM 91074258000-00 shall be supplied by BHEL to the supplier in BLANK condition.
(xiii) Item Nos. 204,205,206,207 & 208 shall be supplied by BHEL to supplier in finished machined condition.
(xiv) All other items (except above) as per CBOM/Drg. will be supplied in nested plates.

1.3 Final stress relieving, final painting and final machining are excluded from the Party's scope of work. However, a single coat of red oxide primer is to be applied wherever called for.

1.4 The fabricated items delivered to BHEL, requiring if any further assembly, welding and NDT work as per drawing/QP after SR/SB including customer clearance shall also be in the scope of supplier.

1.5 SR (Intermediate, if any & final) will be done by BHEL.

1.6 Cleaning of parts, removal of mill scale from components prior to assembly will also be in scope of supplier.

1.7 The rates shall include all consumables as stipulated in Drgs/WPS/QP/MP including D.P.Test.

1.8 Only BHEL approved qualified welders must be employed on the job.

1.9 Only BHEL approved Brands of Electrodes/consumables to be used.

For any work in supplier's scope which are done by BHEL Haridwar at supplier's request will be chargeable and suitable amount will be deducted after the said work is completed.

2. **TRANSPORTATION:-**

a) The material shall be supplied by BHEL at Party works on freight paid basis. Every supplier has to indicate its weekly off-day(s) and other holidays so that BHEL does not send the material on that particular day (s).

b) In case of intermediate stage if any like SR, Shot Blasting, the same will be done by BHEL free of cost. The transportation charges for sending the material to BHEL for intermediate stage shall be borne by supplier.

c) For any work in supplier's scope which are done by BHEL Haridwar at supplier's request will be chargeable and suitable amount will be deducted after the said work is completed. Supplier will have to send the material to BHEL Haridwar works and collect the same, after the said work is completed, at its own cost.

3. **DELIVERY: -** F.O.R.: HEEP, BHEL Hardwar.

4. **DELIVERY SCHEDULE & LD CLAUSE:-** Within 110 days after receipt of material from BHEL or as specified in P.O. Failure to delivery schedules, standard LD/Penalty Clause will be applicable (@1/2% per week or part there of subject to max. 10% of the value of unexecuted portion of the order). The entry date mentioned by CISF on the challan at BHEL material gate will be taken as material receipt date. (Time period taken by BHEL for intermediate operation of SR, machining of diffuser etc., which are in BHEL scope of work as per clause number 1 above, will not be considered for LD purpose. Relevant supportive documents to be submitted along with the bill). **Delivery date will be considered as the date of CISF gate entry date after Final IR.**

5. INSPECTION:-

5.1 For Yadadri-4, 5 project: Inspection by BHEL /BHEL nominated inspection agency as per drawing/ Standard and quality plan requirements.

Quality Plan no. QP/QA/170058 rev00 dated 05.12.2017 is attached, which is to be followed.

All facilities and equipments, calibrated instruments and standard gauges required for inspection shall be provided by the supplier during inspection. In some cases inspection

by customer's representatives like NTPC etc. (Excluding NPC) may also be carried out at Party's works and CHP clearance may be obtained. No additional charges will be paid on this account.

5.2 The supplier is to follow system for material control as per BHEL Quality Control system.

5.3 Identification marks shall be punched on each item by the supplier i.e. Purchase Order No., Drawing No., IR No. etc.

5.4 Aesthetic look is to be maintained as per drawing requirement.

6. GUARANTEE CERTIFICATE:-

The fabricator shall warrant that the fabrications comply fully with the drawings and other technical conditions. If the fabrications are found defective owing to faulty workmanship/incomplete work within a period of eighteen months from the date of dispatch, the fabricator shall make good of it/replace the same free of cost. ***If rework /repairing etc. is done by BHEL, the rectification charges shall be deducted from the Supplier***.

7. PAYMENT TERMS:-

7.1 In case of BHEL material: 90% against receipt & acceptance of material with SRIV and 10% after final accountal of material (i.e. after FTS).

7.2 No packing and forwarding charges will be paid extra.

7.3 In case of rejection, total cost of material will be recovered from the Supplier in case of BHEL Material and no labour cost will be paid.

8. BANK GUARANTEE:-

The supplier has to submit a suitable Bank Guarantee towards the cost of free issue of material. BHEL reserves the right to ask for the Bank Guarantee for increased amount depending upon the material availability with the fabricators from time to time.

9. REJECTION ALLOWANCE:-

No rejection allowance is allowed. BHEL would recover full value of the material damaged. In case of defect observed on material supplied by BHEL at any stage of operations and material stands rejected, then BHEL will pay for the part operations performed by the supplier and such payment shall be made after joint certification by the QC, Technology and Shop Planning Personnel.

10. SCRAP:-

10.1 Generated scrap is to be retained by the sub-contractor. This scrap is chargeable. The scrap rate will be calculated based on the monthly market scrap price Published in MSTC Bulletin under category of scrap MELTING SCRAP (Applicable for Delhi). The calculated monthly price for charging scrap will be rounded off to two decimal places of Rupee. The present monthly price applicable for December 2017 is Rs. 19.65 per Kg. GST & TCS on scrap shall also be applicable which will be chargeable.

10.2 The difference between raw material weight and finalized weight shall be considered for the calculation of scrap generation.

10.3 A 3% invisible cutting allowance shall be given on the finished weight. This may change as per CVC guidelines/Corporate circulars for outsourcing and will be informed accordingly to suppliers.

11. **RECTIFICATION: -** Any rectification (noticed at Shop) arising out of the fabrication done by the supplier, will have to be rectified within 7-10 days by the supplier at their own cost. However, in case the supplier fails to rectify or the defects are such that they are beyond rectification, the total material cost including labour would be recovered from the supplier.

12. **GST: -** As applicable against documentary proof. Mention HSN/SAC code & applicable %age of GST.

13. REVERSE AUCTIONING:-

"BHEL reserves the right to go for Reverse Auction (RA) (Guidelines as available on www.bhel.com) instead of opening the sealed envelope price bid, submitted by the bidder. This will be decided after techno-commercial evaluation. Bidders to give their acceptance with the offer for participation in RA. Non-acceptance to participate in RA may result in non-consideration of their bids, in case BHEL decides to go for RA.
Those bidders who have given their acceptance to participate in Reverse Auction will have to necessarily submit 'Process compliance form' (to the designated service provider) as well as 'Online sealed bid' in the Reverse Auction. Non-submission of 'Process compliance form' or 'Online sealed bid' by the agreed bidder(s) will be considered as tampering of the tender process and will invite action by BHEL as per extant guidelines for suspension of business dealings with suppliers/ contractors (as available on www.bhel.com).
The bidders have to necessarily submit online sealed bid less than or equal to their envelope sealed price bid already submitted to BHEL along with the offer. The envelope sealed price bid of successful L1 bidder in RA, if conducted, shall also be opened after RA and the order will be placed on lower of the two bids (RA closing price envelope sealed price) thus obtained. The bidder having submitted this offer specifically agrees to this condition and undertakes to execute the contract on thus awarded rates.
If it is found that L1 bidder has quoted higher in online sealed bid in comparison to envelope sealed bid for any item(s), the bidder will be issued a warning letter to this effect. However, if the same bidder again defaults on this count in any subsequent tender in the unit, it will be considered as fraud and will invite action by BHEL as per extant guidelines for suspension of business dealings with suppliers/ contractors (as available on www.bhel.com)."

Offer received without your consent is liable to be ignored. The detailed online training will be given by service provider arranged by BHEL.

The first two (L1 & L2) evaluated suppliers after Reverse Auction/Price Bid Opening based on their quoted rates shall only be considered for award against this OT enquiry in the ratio of 2:1 i.e. 2 qty. to L1 supplier and 1 qty . to L2 supplier.L2 supplier will be counter offered L1 rates and order will be placed on L2 supplier only after they accept L1 rate.

14. THE OFFER IS TO BE SUBMITTED IN TWO PARTS:-

14.1 A certificate is to be attached with Techno-Commercial offer (Part-I) for the following:-

(a) All terms & Condition of the enquiry have been fully read, understood and are acceptable.

14.2 Reply of all points of the enquiry in Part-I offer except rates to be submitted in separate sealed envelope, superscripting on the envelop "Techno-commercial offer" with enquiry reference Number and the date of opening of the tender.

14.3 Part-II offer will comprise of rates with BHEL material furnishing in the enclosed Annexure-A in separate sealed envelope super scribing **"Price *Bid*"** with Enquiry reference number.

14.4 BHEL is not responsible for any type of delay in receipt of tender.

14.5 Supplier has the quote rates in Rupees per piece as mentioned in Annexure "A" otherwise offer will be rejected.

14.6 Rate comparison will be on the basis of total cost to BHEL.

14.7 BHEL reserves the right to reject any or all the tenders either in full or part thereof without assigning any reason thereof.

15. GENERAL:-

15.1 The material issued to supplier as free issue material for Fabrication operations shall remain the property of BHEL, Hardwar. The supplier shall use the above materials only for BHEL contract and for no other purpose whatsoever. The supplier shall be liable for the loss or damage to above material from whatsoever cause happening while such material is in the possession or under the control of the supplier. All the materials of BHEL, Haridwar shall under no circumstances be hypothecated to any Bank or to any lending institution or to any Party whatsoever. It should not also be shown as the supplier's assets in any of the statements of supplier to any party.

The supplier shall produce document for the free issue material supplied to them to BHEL officials visiting the supplier's unit for verifications/inspection purposes at any time. If supplier fails to produce or properly account for the material so issued, BHEL, Haridwar will take further action as deemed fit including the recovery of the value of material as per BHEL norms from the supplier's running bills/invoke supplier's Bank Guarantee.

15.2 No further sub-contracting by the supplier is allowed without prior permission of BHEL. if found guilty, will be debarred.

15.3 BHEL reserves the right to:-

- Suspend/cancel the Purchase Order unilaterally without any financial repercussions, if supplier's performance is not found to be satisfactory.
- Any change of wt. the item in the CBOM after the placement of order. The prices in the purchase order will be amended according to revised CBOM.
- Reject any or all the tender either in full or part thereof without assigning any reason.

15.4 Supplier must indicate their `MSMED' status in their un-price bid for reference. Copy of MSMED certificate may also be enclosed for reference.

ANNEXURE –A

Enquiry Ref.No. X/6620/2017/0478/C/1

SL.NO.	**MATERIAL CATOGERY**	**RATE PER PC.**
1.	RATE WITH BHEL MATERIAL	

DATE: Authorised Signature

Name of Supplier

Affix Official Stamp