भारत हेवी इलेक्ट्रिकल्स लिमिटेड
(भारत सरकार का उपक्रम)
BHARAT HEAVY ELECTRICALS LIMITED
(A Govt. of India Undertaking)

Ref: PSER:SCT:RKL-C2004:7767 Date: 10-01-2020

NOTICE INVITING TENDER

NOTE: INTENDING BIDDER TO PARTICIPATE MAY DOWNLOAD FROM WEB SITES

Sealed offers in two part bid system are invited from reputed & experienced bidders meeting PRE QUALIFICATION CRITERIA as mentioned in Annexure-1 through E-Procurement Portal https://bhel.abcprocure.com only, for the subject job by the undersigned on the behalf of BHARAT HEAVY ELECTRICALS LIMITED as per the tender document. Issue/ forwarding intimation regarding tender to any bidder shall not construe that the bidder is considered to be qualified. Following points relevant to the tender may please be noted and complied with.

1.0 Salient Features of NIT

SL NO	ISSUE	DESCRIPTION	
i	TENDER NUMBER	PSER:SCT:RKL-C2004:20	
ii	Broad Scope of job	GEOTECHNICAL INVESTIGATION & TOPOGRAPHICAL SURVEY FOR ASH DYKE-E OF 1x250 MW ROURKELA NSPCL PROJECT.	
iii	DETAILS OF TENDER DOCUMENT		
a	Volume-IA	*General conditions of contract (Supply)*	*Not Applicable.*
b	Volume-IB	*General conditions of contract (Service)*	***Applicable.***
c	Volume-IC	*Special conditions of contract (Supply)*	*Not Applicable.*
d	Volume-ID	*Special conditions of contract (Service)*	***Applicable.***
e	Volume-IE	*Forms and Procedures etc.*	***Applicable.***
f	Volume-IF	*Technical Conditions of Contract (TCC)*	***Applicable.***
g	Volume-III	*Price Schedule (Absolute value) – Rev-00*	***Applicable.***
iv	ISSUE OF TENDER DOCUMENTS	*This is an E-tender floated online through our E-Procurement Site https://bhel.abcprocure.com.* *Start date of the tender: 10-01-2020*	***Applicable.***
v	DUE DATE & TIME OF OFFER SUBMISSION	*Date: 31-01-2020, Time: 15-00 Hrs.* *The bidder should respond by submitting their offer online in our e-Procurement platform at https://bhel.abcprocure.com only. Offers are invited in two-parts only.* *Hard copy bid or bids through email/fax shall not be accepted.*	*Applicable.*
vi	OPENING OF TENDER	*Date: 31-01-2020* *1 hour after the latest due date and time of Offer submission* *Notes:* *(1) In case the due date of opening of tender becomes a non-working day, tenders shall be opened on next working day at the same time.* *(2) Bidder may depute representative to witness the opening of tender.*	*Applicable.*
vii	EMD AMOUNT	Rs 28,260/-	*Applicable.*
viii	COST OF TENDER	*Rs.1,000/-.*	*Applicable.*

ix	LAST DATE FOR SEEKING CLARIFICATION	*Date: 27-01-2020* *Along with soft version also, addressing to undersigned & to others as per contact address given below*	*Applicable.*
x	SCHEDULE OF Pre Bid Discussion (PBD)	--	*Not Applicable (In case BHEL decides to conduct PBD, date, time & venue of PBD will be intimated suitably thru TCN.)*
xi	INTEGRITY PACT & DETAILS OF INDEPENDENT EXTERNAL MONITOR (IEM)	-	*Not applicable.*
xii	Latest updates	Latest updates on the important dates, Amendments, Correspondences, Corrigenda, Clarifications, Changes, Errata, Modifications, Revisions, etc to Tender Specifications will be hosted in BHEL webpage (www.bhel.com) ; CPP portal & E-Procurement Site https://bhel.abcprocure.com only. Bidders to keep themselves updated with all such information.	*Shall be intimated to bidder.*

2.0 The offer shall be submitted as per the instructions of tender document and as detailed in this NIT. Bidders to note specifically that all pages of tender document, including these NIT pages of this particular tender together with subsequent correspondences shall be submitted by them, duly digitally signed & stamped on each page, as part of offer. Rates/Price including discounts/rebates, if any, mentioned anywhere/ in any form in the techno-commercial offer other than the Price Bid, shall not be entertained.

3.0 Unless specifically stated otherwise, bidder shall remit cost of tender (non-refundable) and courier charges if applicable, in the form of Demand Draft drawn in favour of Bharat Heavy Electricals Ltd, payable at Kolkata, issuing the Tender, along with techno-commercial offer.

4.0 Unless specifically stated otherwise, bidder shall have to deposit EMD through Demand Draft/Pay Order in favour of Bharat Heavy Electricals Ltd, payable at Kolkata. For other details please refer General Conditions of Contract.
Bidders may please be noted that "OEMD" provision stands deleted. Hence, bidders who have deposited Rs. 2 Lakh as OEMD are also requested to submit fresh EMD as mentioned in sl no vii under clause no 1.0 of NIT.

5.0 Procedure for Submission of Tenders: The Tenderers must submit their Tenders as detailed below:

DOCUMENTS TO BE UPLOADED & MODALITY OF UPLOADING

Sl no	Description	Remarks
PART-I A	(TECHNO COMMERCIAL BID)	
	CONTAINING THE FOLLOWING:-	
i.	Covering letter/Offer forwarding letter of Tenderer. (**To be attached in relevant Attachment section**)	
ii.	Duly filled-in `No Deviation Certificate' as per prescribed format. (To be attached in relevant Attachment section)	

	Note: a. In case of any deviation, the same should be submitted separately for technical & commercial parts, indicating respective clauses of tender against which deviation is taken by bidder. The list of such deviation shall be attached in relevant attachment section of the e –procurement portal. It shall be specifically noted that deviation recorded elsewhere shall not be entertained. b. BHEL reserves the right to accept/reject the deviations without assigning any reasons, and BHEL decision is final and binding. i). In case of acceptance of the deviations, appropriate loading shall be done by BHEL ii). In case of unacceptable deviations, BHEL reserves the right to reject the tender	
iii.	Supporting documents/ annexures / schedules/ drawing etc as required in line with Pre-Qualification criteria. It shall be specifically noted that all documents as per above shall be attached in relevant attachment section and credential certificates issued by clients shall distinctly bear the name of organization, contact ph no, FAX no, etc.	
iv.	All Amendments/Correspondences/Corrigenda/Clarifications/Changes/ Errata etc pertinent to this NIT. (To be attached in relevant Attachment section)	
v.	Integrity Pact Agreement (Duly signed by the authorized signatory)	Not applicable.
vi.	Duly filled-in annexures, formats etc as required under this Tender Specification/NIT (To be attached in relevant Attachment section)	
vii.	Notice inviting Tender (NIT) (To be attached in relevant Attachment section)	
viii.	Volume – I F: Technical Conditions of Contract (TCC) (To be attached in relevant Attachment section)	
ix.	Volume – I D: Special Conditions of Contract (SCC)-Service (To be attached in relevant Attachment section)	
x.	Volume – I B : General Conditions of Contract (GCC)-Service (To be attached in relevant Attachment section)	
xii.	Volume – I E: Forms & Procedures etc. (To be attached in relevant Attachment section)	
xiii.	Volume–III - (UNPRICED – without disclosing rates/price, but mentioning only 'QUOTED' or 'UNQUOTED' against each item. (To be attached in Unpriced Bid Attachment section)	
xiv.	Any other details preferred by bidder with proper indexing. (To be attached in relevant Attachment section)	

PART-I B	EMD/ COST OF TENDER (To be submitted offline within due date of offer submission)	
	CONTAINING THE FOLLOWING:-	
i.	1. Earnest Money Deposit (EMD) in the form as indicated in this Tender 2. Cost of Tender (Demand Draft or copy of Cash Receipt as the case may be)	

PART-II	PRICE BID (TO BE ATTACHED IN PRICE BID ATTACHMENT SECTION)	
	CONTAINING THE FOLLOWING:-	
i	Covering letter/Offer forwarding letter of Tenderer enclosed in Part-I	
ii	Volume III – PRICE BID (Duly Filled in Schedule of Rates – rate/price to be entered in words as well as figures) Any other document uploaded in the price bid, apart from above tender format, shall not be taken into cognizance for evaluation of offer.	

SPECIAL NOTE:

A) Your offer & documents submitted along with offer shall be digitally signed & stamped in each page by your authorised representative. No overwriting/ correction in tender documents by bidders shall be allowed. However, if correction is unavoidable, the same may be signed by authorized signatory.
B) The credentials/ documents submitted towards compliance of Pre-qualification requirement shall be physically signed by the authorized signatory & stamped before uploading/submission with the offer in the e-procurement portal.
C) All documents/ annexures submitted with the offer shall be properly attached in the respective sections. BHEL shall not be responsible for any missing documents.

6.0 No Deviation with respect to tender clauses and no additional clauses/ suggestions/ in Techno-commercial bid/ Price bid shall normally be considered by BHEL. Bidders are requested to positively comply with the same.

7.0 BHEL reserves the right to accept or reject any or all Offers without assigning any reasons thereof. BHEL also reserves the right to cancel the Tender wholly or partly without assigning any reason thereof. Also BHEL shall not entertain any correspondence from bidders in this matter (except for the refund of EMD).

8.0 Assessment of Capacity of Bidders: - NOT APPLICABLE FOR THIS TENDER

Bidder's capacity for executing the job under tender shall be assessed 'LOAD' wise and 'PERFORMANCE' wise as per the following:

I. LOAD: Load takes into consideration ALL the contracts of the Bidder under execution with BHEL Regions, irrespective of whether they are similar to the tendered scope or not. The cut off month for reckoning 'Load' shall be the 3rd Month preceding the month corresponding to the 'latest date of bid submission', in the following manner -
(Note: For example, if latest bid submission is in Jan 2017, then the 'load' shall be calculated up to and inclusive of Oct 2016)

Total number of Packages in hand = Load (P)

Where 'P' is the sum of all unit wise identified packages (refer table-1) under execution with BHEL Regions as on the cut off month defined above, including packages yet to be commenced, excepting packages which are on Long Hold.

II. PERFORMANCE: Here 'Monthly Performance' of the bidder for all the packages (under execution/ executed during the 'Period of Assessment' in all Power Sector Regions of BHEL) SIMILAR to the packages covered under the tendered scope, excepting packages not commenced shall be taken into consideration. The 'Period of Assessment' shall be 6 months preceding and including the cut off month. The cut off month for reckoning 'Period of Assessment' shall be the 3rd Month preceding the month corresponding to 'latest date of bid submission', in the following manner:
(Note: For example, if 'latest date of bid submission' is in Jan 2017, then the 'performance' shall be assessed for a 6 months' period up to and inclusive of Oct 2016 (i.e. from May 2016 to Oct 2016), for all the unit wise identified packages (refer Table I))

i). Calculation of Overall 'Performance Rating' for 'Similar Package/Packages' for the tendered scope under execution at Power Sector Regions for the 'Period of Assessment':

This shall be obtained by summing up the 'Monthly Performance Evaluation' scores obtained by the bidder in all Regions for all the similar Package/packages', divided by the total number of Package months for which evaluation should have been done, as per procedure below:

a) P_1, P_2, P_3, P_4, P_5 , …. P_N etc. be the packages (under execution/ executed during the 'Period of Assessment' in all Regions of BHEL) SIMILAR to the packages covered under the tendered scope, excepting packages not commenced. Total number of similar packages for all Regions = P_T (i.e. $P_T = P_1 + P_2 + P_3 + P_4 + \ldots P_N$)

b) Number of Months 'T_1' for which 'Monthly Performance Evaluation' as per relevant formats, should have been done in the 'Period of Assessment' for the corresponding similar package P_1. Similarly T_2 for package P_2,T_3 for package P_3, etc. for the tendered scope. Now calculate cumulative total months 'T_T' for total similar Packages 'P_T' for all Regions (i.e. $T_T = T_1 + T_2 + T_3 + T_4 + .. T_N$)

c) Sum 'S_1 'of 'Monthly Performance Evaluation' Scores ($S_{1\text{-}1}$, $S_{1\text{-}2}$, $S_{1\text{-}3}$, $S_{1\text{-}4}$, $S_{1\text{-}5}$…. $S_{1\text{-}T1}$) for similar package P_1, for the 'period of assessment' 'T_1' (i.e. $S_1 = S_{1\text{-}1} + S_{1\text{-}2} + S_{1\text{-}3} + S_{1\text{-}4} + S_{1\text{-}5} + \ldots S_{1\text{-}T1}$). Similarly, S_2 for package P_2 for period T_2, S_3 for package P_3 for period T_3 etc. for the tendered scope for all Regions. Now calculate cumulative sum 'S_T' of 'Monthly Performance Evaluation' Scores for total similar Packages 'P_T' for all Regions (i.e. 'S_T '$= S_1 + S_2 + S_3 + S_4 + S_5 + \ldots S_N$.)

d) Overall Performance Rating 'R_{BHEL}' for the Similar Package/Packages (under execution/ executed during the 'Period of Assessment') in all the Power Sector Regions of BHEL

$$= \frac{\text{Aggregate of Performance scores for all similar packages in all the Regions}}{\text{Aggregate of months for each of the similar packages for which performance should have been evaluated in all the Regions}}$$

$$= \frac{S_T}{T_T}$$

e) Bidders to note that the risk of non-evaluation or non-availability of the 'Monthly Performance Evaluation' reports as per relevant formats is to be borne by the Bidder.

f) Table showing methodology for calculating 'a', 'b' and 'c' above

Sl. No.	Item Description	Details for all Regions							Total
(i)	(ii)	(iii)	(iv)	(v)	(vi)	(vii)	(viii)	(ix)	(x)
1	Similar Packages for all Regions → (under execution/ executed during period of assessment)	P_1	P_2	P_3	P_4	P_5	…	P_N	Total No. of similar packages for all Regions = P_T i.e. Sum (Σ) of columns (iii) to (ix)

Sl. No.	Item Description	Details for all Regions							Total
(i)	(ii)	(iii)	(iv)	(v)	(vi)	(vii)	(viii)	(ix)	(x)
2	Number of Months for which 'Monthly Performance Evaluation' as per relevant formats should have been done in the 'period of assessment' for corresponding Similar Packages (as in row 1)	T_1	T_2	T_3	T_4	T_5	…	T_N	Sum (Σ) of columns (iii) to (ix) = T_T
3	Monthly performance scores for the corresponding period (as in Row 2)	S_{1-1}, S_{1-2}, S_{1-3}, S_{1-4}, … S_{1-T1}	S_{2-1}, S_{2-2}, S_{2-3}, S_{2-4}, … S_{2-T2}	S_{3-1}, S_{3-2}, S_{3-3}, S_{3-4}, … S_{3-T3}	S_{4-1}, S_{4-2}, S_{4-3}, S_{4-4}, … S_{4-T4}	S_{5-1}, S_{5-2}, S_{5-3}, S_{5-4}, … S_{5-T5}	.. … … … …	S_{N-1}, S_{N-2}, S_{N-3}, S_{N-4}, … S_{N-TN}	--------
4	Sum of Monthly Performance scores of the corresponding Package for the corresponding period (as in row-3)	S_1	S_2	S_3	S_4	S_5	…	S_N	Sum (Σ) of columns (iii) to (ix) = S_T

ii). Calculation of Overall 'Performance Rating' (R_{BHEL}) in case at least 6 evaluation scores for 'similar Package/Packages' for the tendered scope ARE NOT AVAILABLE, during the 'Period of Assessment':

This shall be obtained by summing up the 'Monthly Performance Evaluation' scores obtained by the bidder in all Regions for ALL the packages, divided by the total number of Package months for which evaluation should have been done. 'R_{BHEL}' shall be calculated subject to availability of 'performance scores' for at least 6 'package months' in the order of precedence below:

a) 'Period of Assessment' i.e. 6 months preceding and including the cut-off month
b) 12 months preceding and including the cut-off month
c) 24 months preceding and including the cut-off month

In case, R_{BHEL} cannot be calculated as above, then Bidder shall be treated as 'NEW VENDOR'. Further eligibility and qualification of this bidder shall be as per definition of 'NEW VENDOR' described in 'Explanatory Notes'.

iii). Factor "L" assigned based on Overall Performance Rating (R_{BHEL}) at Power Sector Regions:

Sl. no.	Overall Performance Rating (R_{BHEL})	Corresponding value of 'L'
1	=60	NA
2	> 60 and ≤ 65	0.4
3	> 65 and ≤ 70	0.35
4	> 70 and ≤ 75	0.25
5	> 75 and < 80	0.2
6	≥ 80	NA

III. 'Assessment of Capacity of Bidder':

'Assessment of Capacity of Bidder' is based on the Maximum number of packages for which a vendor is eligible, considering the performance scores of similar packages, as below:

Max number of packages P_{Max}= (R_{BHEL} - 60) divided by corresponding value of 'L', i.e. (R_{BHEL}- 60)/L

Note:

i). In case the value of P_{Max} results in a fraction, the value of P_{Max} is to be rounded off to next whole number

ii). For R_{BHEL} = 60, P_{Max} = '1'

iii). For $R_{BHEL} \geq 80$, there will be no upper limit on P_{Max}

The Bidder shall be considered 'Qualified' as per 'Assessment of Capacity of Bidder' for the subject Tender if $P \leq P_{Max}$

(Where P is calculated as per clause 'I' above)

Note: For the transition period of 1 year (i.e. for all the NITs floated between 11th May 2019 to 10th May 2020), in addition to above, 'Assessment of Capacity of Bidder' shall also be calculated considering 'performance scores' till 36 months as per Sl. no II ii).

Higher of the results obtained out of both shall be considered for 'Assessment of Capacity of Bidder'.

IV. Explanatory note:

i). Similar package means Boiler or ESP or Piping or Turbine or Civil or Structure or Electrical or C&I etc. at the individual level irrespective of rating of Plant and irrespective of whether the subject tender is a single package or as part of combined/composite packages. Normally Boiler, ESP, Piping, Turbine, Electrical, C&I, Civil, Structure etc. is considered individual level of package. For example, in case the tendered scope is a Boiler Vertical Package comprising of Boiler, ESP and Power Cycle Piping (i.e. the 'identified packages as per Table-1 below), the 'PERFORMANCE' part against sl.no. II above, needs to be evaluated considering all the identified packages (i.e. Boiler, ESP and Power Cycle Piping) and finally the Bidder's capacity to execute the tendered scope is assessed in line with III above.

ii). Identified Packages (Unit wise)

Table-1

Civil	Electrical and C&I	Mechanical
i). Enabling works ii). Pile and Pile Caps iii). Civil Works including foundations iv). Structural Steel Fabrication & Erection v). Chimney vi). Cooling Tower vii). Others (Civil)	i). Electrical ii). C&I iii). Others (Elect. and C&I)	i). Boiler & Aux (All types including CW Piping if applicable) ii). Power Cycle Piping/Critical Piping iii). ESP iv). LP Piping v). Steam Turbine Generator set & Aux vi). Gas Turbine Generator set & Aux vii). Hydro Turbine Generator set & Aux viii). Turbo Blower (including Steam Turbine) ix). Material Management x). Others (Mechanical)

iii). Bidders who have not been evaluated for at least six package months in the last 24 months preceding and including the Cut-off month in the online BHEL system for contractor performance evaluation in BHEL PS Regions, shall be considered "NEW VENDOR".

A 'NEW VENDOR' shall be considered qualified subject to satisfying all other tender conditions.

A 'NEW VENDOR' if awarded a job (of package/packages identified under this clause) shall be tagged as "FIRST TIMER" on the date of first LOI from BHEL.

The "FIRST TIMER" tag shall remain till completion of all the contracts against which vendor has been tagged as First Timer or availability of 6 evaluation scores within last 24 months preceding and including the Cut-off month in the online BHEL system for contractor performance evaluation in BHEL PS Regions.

A Bidder shall not be eligible for the next job as long as the Bidder is tagged as "FIRST TIMER" excepting for the Tenders which have been opened on or before the date of the bidder being tagged as 'FIRST TIMER'.

After removal of 'FIRST TIMER' tag, the Bidder shall be considered 'QUALIFIED' for the future tenders subject to satisfying all other tender conditions including 'Assessment of Capacity of Bidders'.

iv). Consequent upon applying the criteria of 'Assessment of Capacity of Bidders' detailed above on all the bidders qualified against Technical and Financial Qualification criteria, if the number of qualified bidders reduces to less than four, then for further processing of the Tender, BHEL at its discretion reserves the right to also consider the bidders who are "not qualified" as per criteria of 'Assessment of Capacity of Bidders' and for this, procedure described in following three options shall be followed:

a) All the bidders having Overall Performance Rating ('R_{BHEL}') ≥60 shall be considered qualified against criteria of 'Assessment of Capacity of Bidders'.
b) If even after using option "a", the number of qualified bidders remains less than four, then in addition to bidders considered as per option "a", "First timer" bidders having average of available performance scores ≥60 upto and including the Cut Off month shall also be considered qualified against criteria of 'Assessment of Capacity of Bidders'.
c) If even after using option "a" and "b", the number of qualified bidders remains less than four, then in addition to bidders considered as per option "a" and "b", "First timer" bidders for whom no performance score is available in the system upto and including the Cut Off month, shall also be considered qualified against criteria of 'Assessment of Capacity of Bidders'.

Note:- In case, the number of bidders qualified against Technical and Financial Qualification criteria itself is less than four, then all bidders (a)- having Overall Performance Rating ('R_{BHEL}') ≥60, (b)- First timer" bidders having average of available performance scores ≥60 upto and including the Cut Off month, (c)- "First timer" bidders for whom no performance score is available in the system upto and including the Cut Off month, shall be considered qualified against criteria of 'Assessment of Capacity of Bidders' for further processing of tender.

v). 'Under execution' shall mean works in progress as per the following:

a. Up to execution of 90% of anticipated Contract Value in case of Civil, MM, Structural and Turbo Blower Packages
b. Up to Steam Blowing in case of Boiler/ESP/Piping Packages
c. Up to Synchronization in all Balance Packages

Note: BHEL at its discretion can extend (or reduce in exceptional cases in line with Contract conditions) the period defined against (a), (b) and (c) above, depending upon the balance scope of work to be completed.

vi). Contractor shall provide the latest contact details i.e. mail-ID and Correspondence Address to SCT Department, so that same can be entered in the Contractor Performance Evaluation System, and in case of any change/discrepancy same shall be informed immediately. Login Details for viewing scores in Contractor Performance Evaluation System shall be provided to the Contractor by SCT Department.

vii). Performance Evaluation for Activity Month shall be completed in Evaluation Month (i.e. month next to Activity Month) or in rare cases in Post Evaluation Month (i.e. month next to Evaluation Month) after approval from Competent Authority. In case scores are not acceptable, Contractor can submit Review Request to GM Site/ GM Project latest by 25th of Evaluation Month or 3 days after approval of score, whichever is later. However, acceptance/rejection of 'Review Request' solely depends on the discretion

of GM Site/GM Project. After acceptance of Review Request, evaluation score shall be reviewed at site and the score after completion of review process shall be acceptable and binding on the contractor.

viii). Project on Hold due to reasons not attributable to bidder -

a. Short hold: Evaluation shall not be applicable for this period, however Loading will be considered.

b. Long hold: Short hold for continuous six months and beyond or hold on account of Force Majeure shall be considered as Long Hold. Evaluation as well as Loading shall not be considered for this period.

ix). Performance evaluation in CL 8 above is applicable to Prime bidder and Consortium partner (or Technical tie up partner) for their respective scope of work.

9.0 Since the job shall be executed at site, bidders must visit site/ work area and study the job content, facilities available, availability of materials, prevailing site conditions including law & order situation, applicable wage structure, wage rules, etc before quoting for this tender. They may also consult this office before submitting their offers, for any clarifications regarding scope of work, facilities available at sites or on terms and conditions.

10.0 For any clarification on the tender document, the bidder may seek the same in writing, through e-mail or through E-Procurement Site https://bhel.abcprocure.com, as per specified format, within the scheduled date for seeking clarification, from the office of the undersigned. BHEL shall not be responsible for receipt of queries after due date of seeking clarification due to any delay. Any clarification / query received after last date for seeking clarification may not be normally entertained by BHEL and no time extension will be given.

11.0 BHEL may decide holding of pre-bid discussion [PBD] with all intending bidders as per date indicated in the NIT. The bidder shall ensure participation for the same at the appointed time, date and place as may be decided by BHEL. Bidders shall plan their visit accordingly. The outcome of pre-bid discussion (PBD) shall also form part of tender.

12.0 In the event of any conflict between requirement of any clause of this specification/ documents/drawings/data sheets etc or requirements of different codes/standards specified, the same to be brought to the knowledge of BHEL in writing for clarification before due date of seeking clarification (whichever is applicable), otherwise, interpretation by BHEL shall prevail. Any typing error/missing pages/ other clerical errors in the tender documents, noticed must be pointed out before pre-bid meeting/submission of offer else BHEL's interpretation shall prevail.

13.0 Unless specifically mentioned otherwise, bidder's quoted price shall deemed to be in compliance with tender including PBD.

14.0 Bidders shall submit Integrity Pact Agreement (Duly signed by authorized signatory who signs in the offer), if applicable, along with techno - commercial bid. This pact shall be considered as a preliminary qualification for further participation. The names and other details of Independent External Monitor (IEM) for the subject tender is as given at point (xi) of 1 above.

15.0 The Bidder has to satisfy the Pre Qualifying Requirements stipulated for this Tender in order to be qualified. The Price Bids of only those bidders will be opened who will be qualified for the subject job on the basis of satisfying the Pre Qualification Criteria specified in this NIT as per Annexure-1 (as applicable), past performance etc. and date of opening of price bids shall be intimated to only such bidders. BHEL reserves the right not to consider offers of parties under HOLD.

16.0 In case BHEL decides on a `Public Opening', the date & time of opening of the PRICE BID shall be intimated to the qualified bidders and in such as case, price bid (Volume-III) uploaded in E-procurement Site https://bhel.abcprocure.com will be opened.

17.0 Validity of the offer shall be for six months from the latest due date of offer submission (including extension, if any) unless specified otherwise.

18.0 BHEL reserves the right to go for Reverse Auction (RA) (Guidelines as available on www.bhel.com) instead of opening the sealed envelope price bid, submitted by the bidder. This will be decided after techno-commercial evaluation. Bidders to give their acceptance with the offer for participation in RA. Non-acceptance to participate in RA may result in non-consideration of their bids, in case BHEL decides to go for RA.

However, if reverse auction process is not adopted or is unsuccessful for whatsoever reason, absolute value price bid (Volume-III) uploaded in E-Procurement Site https://bhel.abcprocure.com will be opened for deciding the successful bidder. BHEL's decision in this regard will be final & binding on bidder.

Those bidders who have given their acceptance to participate in Reverse Auction will have to necessarily submit 'Process compliance form' (to the designated service provider) as well as 'Online sealed bid' in the Reverse Auction. Non-submission of 'Process compliance form' or 'Online sealed bid' by the agreed bidder(s) will be considered as tampering of the tender process and will invite action by BHEL as per extant guidelines for suspension of business dealings with suppliers/ contractors (as available on www.bhel.com).

The bidders have to necessarily submit online sealed bid less than or equal to their envelope sealed price bid already submitted to BHEL along with the offer. The envelope sealed price bid of successful L 1 bidder in RA, if conducted, shall also be opened after RA and the order will be placed on lower of the two bids (RA closing price & envelope sealed price) thus obtained. The bidder having submitted this offer specifically agrees to this condition and undertakes to execute the contract on thus awarded rates.

If it is found that L 1 bidder has quoted higher in online seal bid in comparison to envelope sealed bid for any item(s), the bidder will be issued a warning letter to this effect. However, if the same bidder again defaults on this count in any subsequent tender in the unit, it will be considered as fraud and will invite action by BHEL as per extant guidelines for suspension of business dealings with suppliers/ contractors (as available on www.bhel.com).

As a reminder to the bidders, system will flash following message (in Red Color) during the course of 'online sealed bid':
"Bidders to submit online sealed bid less than or equal to their envelope sealed bid already submitted to BHEL"

In case BHEL decides to go for reverse auction, the H1 bidder (whose quote is highest in online sealed bid) may not be allowed to participate in further RA process.

19.0 On submission of offer, further consideration will be subject to compliance to tender & qualifying requirement and customer's acceptance, as applicable.

20.0 In case the bidder is an "Indian Agent of Foreign Principals", 'Agency agreement has to be submitted along with Bid, detailing the role of the agent along with the terms of payment for agency commission in INR, along with supporting documents.

21.0 The bidders shall not enter into any undisclosed M.O.U. or any understanding amongst themselves with respect to tender.

22.0 Consortium Bidding (or Technical Tie up) shall be allowed only if specified in Pre Qualifying Requirement (PQR) criteria, and in such a case the details to be complied with is enclosed herewith as per Annexure-5 UNLESS SPECIFIED OTHERWISE IN PQR.

23.0 The bidder shall submit documents in support of possession of 'Qualifying Requirements' duly self certified and stamped/ digitally signed (as applicable) by the authorized signatory, indexed and properly linked in the format for PQR. In case BHEL requires any other documents/proofs, these shall be submitted immediately.

24.0 The bidder may have to produce original document for verification if so decided by BHEL.

25.0 The offers of the bidders who are on the banned list as also the offer of the bidders, who engage the services of the banned firms, shall be rejected. The list of banned firms is available on BHEL Website (www.bhel.com).

I) Integrity commitment, performance of the contract and punitive action thereof:

a) Commitment by BHEL:

BHEL commits to take all measures necessary to prevent corruption in connection with the tender process and execution of the contract. BHEL will during the tender process treat all Bidder(s) in a transparent and fair manner, and with equity.

b) Commitment by Bidder/ Supplier/ Contractor:

b.i) The bidder/ supplier/ contractor commit to take all measures to prevent corruption and will not directly or indirectly influence any decision or benefit which he is not legally entitled to nor will act or omit in any manner which tantamount to an offence punishable under any provision of the Indian Penal Code, 1860 or any other law in force in India.

b.ii) The bidder/ supplier/ contractor will, when presenting his bid, disclose any and all payments he has made, and is committed to or intends to make to agents, brokers or any other intermediaries in connection with the award of the contract and shall adhere to relevant guidelines issued from time to time by Govt. of India/ BHEL.

b.iii) The bidder/ supplier/ contractor will perform/ execute the contract as per the contract terms & conditions and will not default without any reasonable cause, which causes loss of business/ money/ reputation, to BHEL.

If any bidder/ supplier/ contractor during pre-tendering/ tendering/ post tendering/ award/ execution/ post-execution stage includes in mal-practices, cheating, bribery, fraud or and other misconduct or formation of cartel so as to influence the bidding process or influence the price or acts or omits in any manner which tantamount to an offence punishable under any provision of the Indian Penal code, 1860 or any other law in force in India, then, action may be taken against such bidder/ supplier/ contractor as per extant guidelines of the company available on www.bhel.com and/ or under applicable legal provisions.

26.0 It may please be noted that Guidelines/Rules in respect of Suspension of business dealings (Hold- 12 to 24 Months/ Banning – 3 years etc), Vendor Evaluation formats, quality, safety and HSE guidelines , standard T&P hire charges of BHEL etc may undergo change from time to time and the latest one shall be followed. Latest “Guidelines for Vendor Evaluation” is web based, quality, safety & HSE”; standard T&P hire charges shall be available at site and shall be given to the successful vendors/ subcontractors during execution.

27.0 MSE suppliers can avail the intended benefits in respect of the procurements related to the Goods and Services only (Definition of Goods and Services as enumerated by Govt. of India vide Office Memorandum F. No. 21(8)/2011-MA dtd. 09/11/2016 office of AS & DC, MSME) if they submit along with the offer, attested copies of either EM II certificate having deemed validity (five years from the date of issue of acknowledgement in EM II) or valid NSIC certificate or Udyog Aadhar Memorandum (UAM) & Acknowledgement or EM II certificate along with attested copy of a CA certificate (Format enclosed at Annexure – C where deemed validity of EM II certificate of five years has expired) applicable for the relevant financial year (latest audited). Date to be reckoned for determining the deemed validity will be the date of bid opening (Part 1 in case of two part bid). Non submission of such documents will lead to consideration of their bid at par with other bidders. No benefit shall be applicable for this enquiry if any deficiency in the above required documents are not submitted before price bid opening. If the tender is to be submitted through e-procurement portal, then the above required documents are to be uploaded on the portal. Documents should be notarized or attested by a Gazetted officer.

Any Bidder falling under MSME category, shall furnish the following details & submit documentary evidence/Govt. Certificate etc. in support of the same along with their techno-commercial offer: -

Type under MSME	SC/ST owned	Women owned	Others
Micro			
Small			
Medium			

Note: - If the bidder does not furnish the above, offer shall be processed construing that the bidder is not falling under MSME category.

28.0 The bidder along with its associates/collaborators/sub-contractors/sub-vendors/consultants/service providers shall strictly adhere to BHEL Fraud Prevention Policy displayed on BHEL website www.bhel.com and shall immediately bring to the notice of BHEL Management about any fraud or suspected fraud as soon as it comes to their notice.

29.0 Annexure-A -Amendment to GCC/SCC shall be read in conjunction with GCC-Volume-IB & SCC-Volume-ID. This Annexure-A (Amendment to GCC/SCC) of NIT shall not be considered as part of the NIT but addendum/corrigendum to the GCC/SCC only.

30.0 Annexure-B - Terms & conditions of Reverse Auction is enclosed herewith.

31.0 Annexure-D – Specific Clause w.r.t. BOCW Act & Cess Act is enclosed herewith.

32.0 Annexure-E- Statewise GST Registration nos. is enclosed herewith.

33.0 Duly filled & signed Annexure- CPP-GST/I to be submitted by bidders along with their techno-commercial offer.

34.0 Integrity Pact (IP) –

(a) IP is a tool to ensure that activities and transactions between the Company and its Bidders/ Contractors are handled in a fair, transparent and corruption free manner. Following Independent External Monitors (IEMs) on the present panel have been appointed by BHEL with the approval of CVC to oversee implementation of IP in BHEL.

Sl	IEM	Address	Phone & Email
NOT APPLICABLE FOR THIS TENDER.			

(b) The IP as enclosed with the tender is to be submitted (duly signed by authorized signatory) along with techno-commercial bid (Part-I, in case of two/three part bid). Only those bidders who have entered into such an IP with BHEL would be competent to participate in the bidding. In other words, entering into this Pact would be a preliminary qualification.

(c) Please refer Section-8 of IP for Role and Responsibilities of IEMs. In case of any complaint arising out of the tendering process, the matter may be referred to any of the above IEM(s). All correspondence with the IEMs shall be done through email only.

Note:

No routine correspondence shall be addressed to the IEM (phone/ post/ email) regarding the clarifications, time extensions or any other administrative queries, etc. on the tender issued. All such clarification/ issues

shall be addressed directly to the tender issuing (procurement) department's officials whose contact details are provided below:

Details of contact person(s):

Name	Aditya Kumar	Subrata Sen
Dept	SCT Dept, BHEL PSER, Kolkata	SCT Dept, BHEL PSER, Kolkata
Address	DJ-9/1, Sector – II, Salt Lake, Kolkata – 700091	DJ-9/1, Sector – II, Salt Lake, Kolkata – 700091
Phone	033-2339 8237/8235	033-2339 8226
Email	aditya.kr@bhel.in	subrata.sen@bhel.in
FAX	033-2321 1960	033-2321 1960

35.0 For this procurement, Public Procurement (Preference to Make in India), Order 2017 dated 15.06.2017 & 28.05.2018 and subsequent Orders issued by the respective Nodal Ministry shall be applicable even if issued after issue of this NIT but before finalization of contract/ PO/ WO against this NIT.
In the event of any Nodal Ministry prescribing higher or lower percentage of purchase preference and/ or local content in respect of this procurement, same shall be applicable.

36.0 Bidders are requested to submit their best price as per latest price schedule of the tender.

37.0 It may please be noted that Bid should be free from correction, overwriting, using corrective fluid, etc. Any interlineation, cutting, erasure or overwriting shall be valid only if they are attested under full signature(s) of person(s) signing the bid, else bid shall be liable for rejection.

All overwriting/ cutting, etc will be numbered by bid opening officials and announced during bid opening.

38.0 Order of Precedence
In the event of any ambiguity or conflict between the Tender Documents, the order of precedence shall be in the order below:

a. Amendments/Clarifications/Corrigenda/Errata etc issued in respect of the tender documents by BHEL
b. Notice Inviting Tender (NIT)
c. Price Bid-Volume-III
d. Technical Conditions of Contract (TCC) -- Volume-IF
e. Special Conditions of Contract (SCC) —Volume-ID
f. General Conditions of Contract (GCC) —Volume-IB
g. Forms and Procedures —Volume-IE

for BHARAT HEAVY ELECTRICALS LTD

Sr. Engr (SCT)

Agency	Contact details	
BHEL, PSER, Kolkata	Address	DJ-9/1, Sector – II, Salt Lake, Kolkata – 700 091
	Phone no	033-2339 8231/ 8237/ 8000
	FAX no	033-23211960
	E-mail	aditya.kr@bhel.in; subrata.sen@bhel.in, k.anish@bhel.in

Enclosure

01. Annexure-1: Pre Qualification Criteria.
02. Annexure-2: Format for No deviation Certificate.
03. Annexure-3: Format for seeking clarification.

04. Annexure-4: Check List.
05. Annexure-5: Conditions for consortium/tie up.
06. Annexure –A- Amendment to GCC/SCC.
07. Annexure -B- Terms & conditions of Reverse Auction.
08. Annexure –C- CA certificate Format.
09. Annexure-D – Specific Clause w.r.t. BOCW Act & Cess Act.
10. Annexure-E- Statewise GST Registration nos.
11. Annexure– CPP-GST/I.
12. Other Tender documents as per this NIT.

ANNEXURE-1

PRE QUALIFICATION CRITERIA

JOB	GEOTECHNICAL INVESTIGATION & TOPOGRAPHICAL SURVEY FOR ASH DYKE-E OF 1x250 MW ROURKELA NSPCL PROJECT
TENDER NO	PSER:SCT:RKL-C2004:20

SL NO	CRITERIA
1.0	FINANCIAL CRITERIA
1.0 (a)	BIDDER SHOULD HAVE AVERAGE MINIMUM ANNUAL FINANCIAL TURNOVER RS. 4.24 LAKHS DURING LAST 3 (THREE) YEARS, ENDING ON 31.03.2019 AND HAVING POSITIVE NET WORTH AS ON LATEST AUDITED ACCOUNTS AS SUBMITTED FOR PARA 1(C). (b) BIDDER MUST HAVE EARNED PROFIT IN ANY ONE OF THE LAST THREE FINANCIAL YEARS ENDING ON 31.03.2019. AUDITED BALANCE SHEET AND PROFIT & LOSS ACCOUNT OF THE COMPANY FOR LAST 3 (THREE) FINANCIAL YEARS, ENDING ON 31.03.2019 NEED TO BE SUBMITTED IN SUPPORT OF ABOVE. (c) IN CASE AUDITED BALANCE SHEET AND PROFIT & LOSS ACCOUNT HAS NOT BEEN SUBMITTED FOR ALL THREE YEARS INDICATED ABOVE THEN THE APPLICABLE FINANCIAL AUDITED STATEMENTS SUBMITTED BY THE BIDDERS AGAINST THE REQUISITE THREE YEARS WILL BE AVERAGED FOR THREE YEARS. (d) IF FINANCIAL STATEMENTS ARE NOT REQUIRED TO BE AUDITED STATUTORILY, THEN INSTEAD OF AUDITED FINANCIAL STATEMENTS, FINANCIAL STATEMENTS ARE REQUIRED TO BE CERTIFIED BY CHARTERED ACCOUNTANT.
2.0	TECHNICAL CRITERIA
2.1	BIDDER SHOULD HAVE EXECUTED SIMILAR WORKS (GEO-TECHNICAL INVESTIGATION / TOPOGRAPHICAL SURVEY AND GEO-TECHNICAL INVESTIGATION WORKS) FOR POWER PROJECT / INFRASTRUCTURES PROJECT / INDUSTRIAL PROJECT OR BUILDING PROJECT DURING LAST SEVEN YEARS, ENDING ON THE LAST DATE OF SUBMISSION OF BID, VALUE OF WHICH SHOULD BE ONE OF THE FOLLOWING: A) SINGLE SIMILAR WORK COSTING NOT LESS THAN RS. 11.30 LAKHS OR B) TWO SIMILAR WORKS COSTING NOT LESS THAN RS. 7.07 LAKHS EACH OR C) THREE SIMILAR WORKS COSTING NOT LESS THAN RS. 5.65 LAKHS EACH RELEVANT DOCUMENT IN SUPPORT OF ABOVE SHALL BE SUBMITTED.
3.0	BIDDER SHOULD HAVE VALID PAN RELEVANT SUPPORTING DOCUMENT SHALL BE SUBMITTED.
4.0	CONSORTIUM / JV BIDDING IS NOT ALLOWED.
	GENERAL
A	IN CASE THE JOB IS UNDER EXECUTION / ONGOING JOB, THE VALUE OF EXECUTED PORTION OF THE JOB SHALL BE AT LEAST CORRESPOND TO THE RESPECTIVE VALUES SPECIFIED ABOVE EVEN IF THE CONTRACT HAS NOT BEEN COMPLETED OR CLOSED.
B	BIDDER SHALL SUBMIT ABOVE PRE-QUALIFICATION CRITERIA FORMAT, DULY FILLED-IN, SPECIFYING RESPECTIVE ANNEXURE NUMBER AGAINST EACH CRITERIA AND FURNISH RELEVANT DOCUMENT IN THE RESPECTIVE ANNEXURES IN THEIR OFFER
C	AFTER SATISFACTORY COMPLIANCE TO ALL ABOVE CRITERIA, OFFER WILL BE EVALUATED AS PER NIT AND OTHER TERMS & CONDITIONS OF TENDER.

Explanatory Notes for the PQR (unless otherwise specified in the PQR):

1. Bidder to submit Audited Balance Sheet and Profit and Loss Account for the respective years as indicated along with all annexures.
2. In case audited Financial statements have not been submitted for all the three years as indicated, then the applicable audited statements submitted by the bidders against the requisite three years, will be averaged for three years i.e total divided by three.
3. NETWORTH : Shall be calculated based on the latest Audited Accounts as furnished. Net worth = Paid up share capital + Reserves. (Net worth is required to be evaluated in case of companies)
4. PROFIT : shall be NET profit (PAT + Non cash expenditure viz depreciation) earned during any one of the three financial years.
5. 'Additional' Criteria in respect of 'Technical' criteria of PQR for Civil, Electrical, CI, unless otherwise specified:

   i) 'Similar' work means
      a. Piling or Civil or Structure or 'Civil and Structural works' or RCC Chimney or RCC Cooling Tower or RCC Silo or Mill Bunker or any combination of these shall be considered similar works for all packages mentioned under 'CIVIL WORKS'
      b. Electrical or C&I or 'Electrical and C&I' shall be considered similar works for all packages mentioned under 'ELECTRICAL AND C&I WORKS'

6. Completion date for achievement of the 'Technical' criteria of PQR will be the last 7 years ending on the 'latest date of Bid submission' of Tender irrespective of date of the start of work
7. 'EXECUTED' means the bidder should have achieved the criteria specified in the Technical criteria of PQR even if the Contract has not been completed or closed
8. Unless otherwise specified, for the purpose of 'Technical' criteria of PQR, the word 'EXECUTED' means achievement of milestones as defined below:
   a. "ACHIEVEMENT OF PHYSICAL QUANTITIES" as per respective PQRs.
   b. "READINESS FOR COAL FILLING" in respect of Mill Bunker.
   c. "CHARGING" in respect of Power Transformers / Bus Ducts / "HT/LT Switchgears" / "HT / LT Cabling".
   d. For C&I works: "SYNCHRONISATION" in case of power project and "WORK COMPLETION of the value as defined in PQR" in case of industry.
   e. "BOILER LIGHT UP" in respect of Boiler / CFBC / ESP.
   f. "GAS IN" in respect of HRSG.
   g. "STEAM BLOWING COMPLETION" in respect of Power Cycle Piping.
   h. "HYDRAULIC TEST" of the system in respect of Pressure parts / LP Piping / CW Piping.
   i. "FULL LOAD OPERATION OF THE UNIT" in respect of Insulation work.
   j. "SYNCHRONISATION" in respect of STG / GTG.
   k. "SPINNING" in respect of HTG.
   l. "COMPLETION AND HANDING OVER FOR MECHANICAL ERECTION" in respect of STG Deck and Machine/Equipment foundation.
9. Boiler means HRSG or WHRB or any other types of Steam Generator
10. Power Cycle piping means Main Steam, Hot Reheat, Cold Reheat, HP Bypass
11. For the purpose of evaluation of the PQR, one MW shall be considered equivalent to 3.5TPH where ever rating of HRSG/BOILER is mentioned in MW. Similarly, where ever rating of Gas Turbine is mentioned in terms of Frame size, ISO rating in terms of MW shall be considered for evaluation.
12. In case the experience/PO/WO certificate enclosed by bidders do not have separate break up prices for the E&C portion of Electrical and CI Works, (i.e. the certificates enclosed are for composite order for supply and erection of Electrical & CI and other works if any), then value of Erection and Commissioning for the Electrical & CI portion shall be considered as 15% of the supply & erection of Electrical & CI, unless otherwise specifically indicated in the PQR.
13. Scope for capital overhaul of STG shall cover Bearing Inspection work and overhauling of all cylinders of the Turbine.
14. In case the tendered scope is not a Pulverised Fuel Boiler, experience of Oil/Gas Fired Boilers also can be considered.
15. Value of work is to be updated with indices for "All India Avg. Consumer Price index for industrial workers" and "Monthly Whole Sale Price Index for All Commodities" with base month as per last month of work execution and indexed up to three (3) months prior to the month of latest due date of bid submission as per following formula-

$$P = R + 0.425 \times R \times \frac{(X_N - X_0)}{X_0} + 0.425 \times R \times \frac{(Y_N - Y_0)}{Y_0}$$

Where

P = Updated value of work

R = Value of executed work

X_N = All India Avg. Consumer Price index for industrial workers for three months prior to the month of latest due date of bid submission (e.g. If latest bid submission date is 02-Mar-17, then bid submission month shall be reckoned as March'17

and index for Dec'2016 shall be considered).

X_0 = All India Avg. Consumer Price index for industrial workers for last month of work execution

Y_N = Monthly Whole Sale Price Index for All Commodities for three months prior to the month of latest due date of bid submission (e.g. If latest bid submission date is 02-Mar-17, then bid submission month shall be reckoned as March'17 and index for Dec'2016 shall be considered).

Y_0 = Monthly Whole Sale Price Index for All Commodities for last month of work execution

16. PROFIT shall be PBT earned during any one year of last three financial years as mentioned in PQR.
17. For evaluation of PQR, the credentials of the Bidder alone, and not that of the Group Company shall be considered.
18. "Executed" means the bidder should have achieved the criteria specified in the PQR even if the Contract has not been completed or closed.
19. Bidder must not be under Bankruptcy Code Proceedings (IBC) by NCLT or under Liquidation / BIFR, which will render him ineligible for participation in this tender, and shall submit undertaking to this effect.

ANNEXURE - 2

FORMAT FOR NO DEVIATION CERTIFICATE
(To be submitted in the bidder's letter head)

BHARAT HEAVY ELECTRICALS LIMITED,
Power Sector - Eastern Region,
Plot no 9/1, DJ Block, Sector – II, Salt Lake City,
Kolkata – 700 091

Sub	No Deviation Certificate.	
Job	GEOTECHNICAL INVESTIGATION & TOPOGRAPHICAL SURVEY FOR ASH DYKE-E OF 1x250 MW ROURKELA NSPCL PROJECT.	
Ref	1.0	Tender no PSER:SCT:RKL-C2004:20
	2.0	BHEL's NIT, vide reference no PSER:SCT:RKL-C2004:7767 Date: 10-01-2020
	3.0	All other pertinent issues till date.

Dear Sirs,

With reference to above, this is to confirm that as per tender conditions, we have visited site before submission of our offer and noted the job content & site conditions etc. We also confirm that we have not changed/ modified the tender documents as appeared in the website/ issued by you and in case of such observance at any stage, it shall be treated as null and void.

We hereby confirm that we have not taken any deviation from tender clauses together with other references as enumerated in the above referred NIT. We hereby confirm our unqualified acceptance to all terms & conditions, unqualified compliance to technical specification, integrity pact (if applicable) and acceptance to reverse auctioning process.

In the event of observance of any deviation in any part of our offer at a later date whether implicit or explicit, the deviations shall stand null & void.

We confirm to have submitted/uploaded offer/documents in accordance with tender instructions with acceptance of the terms & conditions of the tender by us and as per aforesaid references.

Thanking you,

Yours faithfully,

(Signature, date & seal of authorized
representative of the bidder)

ANNEXURE - 3

FORMAT FOR SEEKING CLARIFICATION

JOB	GEOTECHNICAL INVESTIGATION & TOPOGRAPHICAL SURVEY FOR ASH DYKE-E OF 1x250 MW ROURKELA NSPCL PROJECT
TENDER NO	PSER:SCT:RKL-C2004:20

Sl no	Reference clause of tender document	Existing provision	Bidder's query	BHEL's clarification

ANNEXURE - 4

CHECK LIST

NOTE:- Tenderers are required to fill in the following details and no column should be left blank

1	Name and Address of the Tenderer	
2	Details about type of the Firm/Company	
3.a	Details of Contact person for this Tender	Name : Mr/Ms Designation: Telephone No: Mobile No: Email ID: Fax No:
3.b	Details of alternate Contact person for this Tender	Name : Mr/Ms Designation: Telephone No: Mobile No: Email ID: Fax No:
4	EMD DETAILS	DD No: Date : Bank : Amount: Please tick (√) whichever applicable:- ONE TIME EMD / ONLY FOR THIS TENDER
5	Validity of Offer	TO BE VALID FOR SIX MONTHS FROM DUE DATE

		APPLICABILITY(BY BHEL)	ENCLOSED BY BIDDER
6	Whether the format for compliance with PRE QUALIFICATION CRITERIA (ANNEXURE-I) is understood and filled with proper supporting documents referenced in the specified format	Applicable	YES / NO
7	Audited profit and Loss Account for the last three years	Applicable/Not Applicable	YES/NO
8	Copy of PAN Card	Applicable/Not Applicable	YES/NO
9	Whether all pages of the Tender documents including annexures, appendices etc are read understood and signed	Applicable/Not Applicable	YES/NO
10	Integrity Pact	Applicable/Not Applicable	YES/NO
11	Declaration by Authorised Signatory	Applicable/Not Applicable	YES/NO
12	No Deviation Certificate	Applicable/Not Applicable	YES/NO
13	Declaration confirming knowledge about Site Conditions	Applicable/Not Applicable	YES/NO
14	Declaration for relation in BHEL	Applicable/Not Applicable	YES/NO
15	Non Disclosure Certificate	Applicable/Not Applicable	YES/NO
16	Bank Account Details for E-Payment	Applicable/Not Applicable	YES/NO
17	Capacity Evaluation of Bidder for current Tender	Applicable/Not Applicable	YES/NO
18	Tie Ups/Consortium Agreement are submitted as per format	Applicable/Not Applicable	YES/NO
19	Power of Attorney for Submission of Tender/Signing Contract Agreement	Applicable/Not Applicable	YES/NO
20	Analysis of Unit rates	Applicable/Not Applicable	YES/NO
21	Bankruptcy Code Proceedings (IBC) by NCLT or under Liquidation / BIFR (Undertaking to be enclosed if not applicable)	Applicable/Not Applicable	YES/NO

NOTE: STRIKE OFF 'YES' OR 'NO', AS APPLICABLE. TENDER NOT ACCOMPANIED BY THE PRESCRIBED ABOVE APPLICABLE DOCUMENTS ARE LIABLE TO BE SUMMARILY REJECTED.

DATE :

AUTHORISED SIGNATORY
(With Name, Designation and Company seal)

ANNEXURE-5

CONDITIONS TO BE COMPLIED WITH FOR CONSORTIUM BIDDING (TECHNICAL TIE UP)

1 Prime Bidder and Consortium Partner or partners are required to enter into a consortium agreement with a validity period of six months initially. In case the consortium is awarded the contract, then the Consortium Agreement between the Prime Bidder and Consortium Partner or partners shall be extended till contractual completion period including extension periods if any applicable. The Prime Bidder and Consortium Partner(s) shall certify to BHEL regarding existence and validity of their consortium agreement on six monthly basis.

2 Standalone' bidder cannot become a 'Prime Bidder' or a 'Consortium bidder' or 'Technical Tie up bidder' in a consortium (or Technical Tie up) bidding. Prime bidder shall neither be a consortium partner to other prime bidder nor take any other consortium partners. However, consortium partner may enter into consortium agreement with other prime bidders. In case of non compliance, consortium bids of such Prime bidders will be rejected.

3 Number of partners for a consortium Bidding (or Technical Tie up) shall be as specified in the PQR.

4 Prime Bidder shall be as specified in the Pre Qualification Requirement, else the bidder who has the major share of work.

5 In order to be qualified for the tender, Prime Bidder and Consortium partner or partners shall satisfy (i) the Technical 'Pre Qualifying Requirements' specified for the respective package, (ii) "Assessment of Capacity of Bidder' as specified in clause 8.0

6 Prime Bidder shall comply with additional 'Technical' criteria of PQR as defined in 'Explanatory Notes for the PQR'

7 Prime Bidder shall comply with all other Pre Qualifying criteria for the Tender unless otherwise specified

8 In case customer approval is required, then Prime Bidder and Consortium Partner or partners shall have to be individually approved by Customer for being considered for the tender.

9 Prime Bidder shall be responsible for the overall execution of the contract

10 In case of award of job, Performance shall be evaluated for Prime Bidder and Consortium Partner or partners for their respective scope of work(s) as per prescribed formats.

11 In case the Consortium partner or partners back out, their SDs shall be encashed by BHEL. In such a case, other consortium partner or partners meeting the PQR have to be engaged by the Prime Bidder, and if not, the respective work will be withdrawn and executed on risk and cost basis of the Prime Bidder. The new consortium partner or partners shall submit fresh SDs as applicable.

12 In case the prime Bidder withdraws, the whole contract shall be considered cancelled and short closed.

13 After successful execution of one work with a consortium partner under direct orders of BHEL, the Prime Bidder shall be eligible for becoming a 'standalone' bidder for works similar to that for which consortium partner was engaged, for subsequent tenders.

14 The consortium partner shall submit SD equivalent to 1% of the total contract value in addition to the SD to be submitted by the prime Bidder for the total contract value.

15 In case of a Technical Tie up, all the clauses applicable for the Consortium partner shall be applicable for the Technical Tie up partner also.

Annexure - A

Amendment to GCC/SCC

1. Introduction of Clause No 1.15.13 in GCC as below:

Clause No 1.15.13: Additional security deposit (SD) has to be submitted by the successful bidder with value as follows:

"If the final price of successful bidder is lesser by 'more than 20%' of BHEL's estimate - 'Additional Security Deposit' will be required to be submitted by the successful bidder with value as follows:

Additional Security Deposit = 30 % of (A-B) limited to a maximum of 10% of the 'Total Price/Contract Value', where,

A = 80% of BHEL estimate

B = The final offered price of successful bidder through RA (In case of RA)

OR

Sealed paper price bid of successful bidder (in case of paper bid)

This 'Additional Security Deposit' shall have the same validity as that of the 'Security Deposit' and shall be revalidated/released in the manner as spelt out for the 'Security Deposit' as per relevant clause of GCC.

The BHEL's estimated value shall be disclosed to the successful bidder (on their request) at appropriate juncture in case 'Additional Security Deposit' is applicable."

2. Clause no. 1.9.1(ii) of GCC shall be read as below:

The EMD may be accepted only in the following forms:

(a) Cash deposit as permissible under the extant Income Tax Act (before tender opening)

(b) Electronic Fund Transfer credited in BHEL account (before tender opening)

(c) Banker's cheque/ Pay order/ Demand draft, in favour of BHEL (along with offer)

(d) Fixed Deposit Receipt (FDR) issued by Scheduled Banks/ Public Financial Institutions as defined in the Companies Act (FDR should be in the name of the Contractor, a/c BHEL).

In addition to above, the EMD amount in excess of Rs. 2 Lakh may also be accepted in the form of Bank Guarantee from scheduled bank. The Bank Guarantee in such cases shall be valid for atleast six months. EMD of successful tenderer will be retained as part of Security Deposit.

Clause no. 1.9.1(iv) & (v) of GCC stands deleted.

3. Clause no. 1.10.1 of GCC shall be read as below:

The total amount of Security Deposit will be 5% of the contract value. EMD of the successful tenderer shall be converted and adjusted towards the required amount of Security Deposit.

4. Clause no. 1.10.2 of GCC shall be read as below:

At least 50% of the required Security Deposit, including the EMD, should be furnished before start of the work. Balance of the Security Deposit can be deposited by deducting 10% of the gross amount progressively from each of the running bills of the Contractor till the total amount of the required Security Deposit is collected.

The recoveries made from running bills (cash deduction towards balance SD amount) can be released against submission of equivalent Bank Guarantee in acceptable form, but only once, before completion of work, with the approval of competent authorities.

5. Clause no. 1.10.3 of GCC shall be read as below:

The balance amount to make up the required Security Deposit of 5% of the contract value may be accepted in the following forms:

a) Cash (as permissible under the extant Income Tax Act)
b) Local cheques of Scheduled Banks (subject to realization)/ Pay Order/ Demand Draft/ Electronic Fund Transfer in favour of BHEL
c) Bank Guarantee from Scheduled Banks/ Public Financial Institutions as defined in the Companies Act. The Bank Guarantee format should have the approval of BHEL
d) Fixed Deposit Receipt issued by Scheduled Banks/ Public Financial Institutions as defined in the Companies Act (FDR should be in the name of the Contractor, a/c BHEL)
e) Securities available from Indian Post offices such as National Savings Certificates, Kisan Vikas Patras etc. (held in the name of Contractor furnishing the security and duly endorsed/ hypothecated/ pledged, as applicable, in favour of BHEL)

(Note: BHEL will not be liable or responsible in any manner for the collection of interest or renewal of the documents or in any other matter connected therewith)

6. Introduction of Clause No. 1.10.8 in GCC as below:

Clause No 1.10.8: SDBG to be furnished by the vendor before start of work. No payment will be released till SDBG is submitted by the vendor.
If requested by the vendor, cash recovery equivalent to SDBG value to be made from bills submitted by the vendor.
Also recovery of interest calculated @SBI PLR +2% on amount equivalent to SDBG / PBG value to be made for the gap period (difference between date of start of work and date of submission of BG / cash recovery).
In case of delay in extension of SDBG, in case of validity expiry, SDBG shall be invoked. However if the vendor submits a new BG after invocation of the previous BG then, it shall be refunded and recovery for the gap period, i.e. the duration for which BG is not available shall be made as stated above.

7. Clause no. 1.11 of GCC shall be read as below:

Security Deposit shall be refunded/Bank Guarantee(s) released to the Contractor along with the 'Final Bill' after deducting all expenses / other amounts due to BHEL under the contract / other contracts entered into with them by BHEL upon fulfilment of contractual obligations as per terms of the contract.

8. Clause no. 2.8.3, 2.8.4 and 2.8.5 of GCC shall be read as below:

Clause no. 2.8.3: The contractor shall comply with all applicable State and Central Laws, Statutory Rules, Regulations, Notifications, etc. such as Payment of Wages Act, Minimum Wages Act, Workmen Compensation Act, Employer's Liability Act, Industrial Disputes Act, Employers Provident Act, Employees State Insurance Scheme, Contract Labour (Regulation and Abolition) Act, 1970, Payment of Bonus & Gratuity Act, Building and Other Construction Workers (Regulation of Employment and Conditions of Service) Act, 1996, The Building and Other Construction Workers' Welfare Cess Act, 1996 and other Acts, Rules, and Regulations for labour/workers as applicable and as may be enacted by the State Government and Central Govt. during the tenure of the Contract and having force or jurisdiction at Site. The Contractor shall also comply with provisions of and give all such notices to the local Governing Body, Police and other relevant Authorities as may be required by the Law.

Clause no. 2.8.4: The Contractor shall obtain independent License under the Contract Labour (Regulations and Abolition) Act, 1970 for engaging contract labour as required from the concerned Authorities based on the certificate (Form- V) issued by the Principal Employer/Customer.

Clause no. 2.8.5: The contractor shall pay and bear all taxes, fees, license charges, Cess, duties, deposits, tolls, royalties, commission or other charges which may be leviable on account of his operations in executing the contract.

9. Clause 2.12 of GCC (Overrun Compensation)

2.12 OVERRUN COMPENSATION (ORC)

2.12.1 ORC during original contract period: No ORC shall be applicable during the original contract period.

2.12.2 ORC during extended period for the reasons solely attributable to contractor: No ORC shall be applicable during the extended period granted for the reasons solely attributable to contractor and work executed during this period shall be paid as per original contract rates.

2.12.3 ORC during extended period for the reasons not attributable to contractor: ORC shall be payable as per following procedure:

2.12.3.1 For initial period of twelve months of extended period, ORC rate applicable over executed value shall be 5%. For every subsequent period of twelve months, ORC rate shall be further increased by 5% over the previous rate. For example, ORC rates applicable for initial period of 12 months and subsequent period of 12 months are given below.

Sl. No.	Extended Period for the reasons attributable to BHEL	ORC rate applicable over executed value
1	First 12 months	5%
2	13th-24th month and so on	10.25% {[(1.05 x 1.05)-1] x 100}

This process of increasing ORC rate for each subsequent period of 12 months shall continue till applicability of ORC.

2.12.3.2 On completion of original contract period as well as on completion of each subsequent period of twelve months i.e. at the time of change in applicable ORC rate, Delay Analysis shall be carried out and percentage shortfall attributable to both BHEL & Contractor shall be calculated.

2.12.3.3 For the purpose of calculation of ORC, executed value of work in the month shall be divided in Part-1 and Part-2 in proportion of percentage shortfall attributable to BHEL and contractor respectively, based on the last delay analysis as worked out in 2.12.3.2.
ORC shall be payable only on Part-1 and no ORC shall be payable on Part-2.

Value of Part-1 shall be further limited to the value of actual inputs provided by BHEL i.e. "Plan - Shortfall attributable to BHEL" for the month, as per Form-14 for calculation of ORC.

2.12.3.4 Payment of ORC amount shall be further regulated as follows:

(i) 50% of the ORC is allocated for deployment of matching resources (with weightages) agreed as per the joint programme drawn vide 2.11.4. ORC Payment against resources shall be calculated in proportion to percentage of resources actually deployed w.r.t. planned resources, as per Form-14.

(ii) 50% of ORC is allocated for achieving of planned progress agreed as per the joint programme drawn vide 2.11.4. ORC Payment shall be reduced in proportion to percentage

shortfall attributable to contractor w.r.t. "Plan - Shortfall attributable to BHEL" for the month, as per Form-14.

2.12.3.5 The maximum amount of ORC payable for the month shall be limited to Rs. 5,00,000/-.

2.12.3.6 In case, there is no shortfall attributable to contractor for the month and also contractor has deployed the resources as agreed in Form-14 but ORC amount payable for the month worked out as per procedure mentioned in clause 2.12.3.3, 2.12.3.4 and 2.12.3.5, is less than Rs.1,00,000/-, then ORC amount payable for the month shall be Rs.1,00,000/- otherwise ORC amount payable for the month shall remain same.

2.12.3.7 In case execution is on HOLD (Other than Force Majeure), ORC shall be payable as per following:

i). Contractor has not been permitted by BHEL to de-mobilize
   a) ORC amount of Rs. 1,00,000/- per month shall be applicable during the period of HOLD provided resources as planned are deployed (not demobilised) during the period of hold.
   b) Subsequent to lifting of HOLD, Period of HOLD shall not be excluded in calculation of period for deciding applicable ORC rate as per clause 2.12.3.1.

ii). Contractor has been permitted to demobilize and to remobilize after lifting of HOLD
   a) No ORC shall be payable to contractor for the period of HOLD.
   b) Subsequent to lifting of HOLD, Period of HOLD shall not be excluded in calculation of period for deciding applicable ORC rate as per clause 2.12.3.1.

2.12.3.8 In case Force Majeure is invoked:
   (i) No ORC shall be applicable during the period of Force Majeure.
   (ii) Subsequent to revocation of Force Majeure, period of Force Majeure shall be excluded in calculation of period for deciding applicable ORC rate as per clause 2.12.3.1.

2.12.4 Applicability of ORC: ORC shall not be applicable for following activities.
   (i) Area cleaning, removal of temporary structures and return of scrap.
   (ii) Punch list points / pending points liquidation pending due to reasons attributable to contractor
   (iii) Submission of "As built Drawing"
   (iv) Material Reconciliation
   (v) Completion of Contract Closure formalities like HR Clearance/ No dues from various dept./ Statutory Authorities etc.

2.12.5 Total Over Run Compensation shall be limited to 10% of the cumulatively executed contract value till the month (excluding Taxes and Duties if payable extra). For this purpose, executed contract value excludes PVC, ORC and Extra/Supplementary Works.

10. Clause 2.14 of GCC (Quantity Variation)

a) Existing Clause 2.14.1 of GCC stands revised as follows:

"The quantities given in the contract are tentative and may change to any extent (both in plus side and minus side). The quoted rates for individual items shall remain firm irrespective of any variations in the individual quantities No compensation becomes payable in case the variation of the final executed contract value is within the limit of Minus (-) 15% of awarded contract value"

b) Existing Clause 2.14.2 ii). of GCC stands revised as follows:

"In case the finally executed contract value increases above the awarded Contract Value due to quantity variation, there will be no upward revision in the rates for the individual items and also contractor is not eligible for any compensation."

11. Clause 2.15 of GCC (EXTRA WORKS)

a) Existing Clause 2.15.5 of GCC stands revised as follows:

"After eligibility of extra works is established and finally accepted by BHEL engineer/designer, payment will be released on competent authority's approval at the following rate.

MAN-HOUR RATE FOR ELIGIBLE EXTRA WORKS: Single composite average labour man-hour rate, including overtime if any, supervision, use of tools and tackles and other site expenses and incidentals, consumables for carrying out any major rework/ repairs/ rectification/ modification/ fabrication as certified by site as may arise during the course of erection, testing, commissioning or extra works arising out of transit, storage and erection damages, payment, if found due will be at Rs 108/- per man hour."

12. Clause 2.17 of GCC (Price Variation Compensation) stands revised as follows:

2.17 PRICE VARIATION COMPENSATION

2.17.1 In order to take care of variation in cost of execution of work on either side, due to variation in the index of LABOUR, HIGH SPEED DIESEL OIL, WELDING ROD, CEMENT, STEEL, MATERIALS,
Price Variation Formula as described herein shall be applicable (only for works executed during extended period, if any, subject to other conditions as described in this section)

2.17.2 85% component of Contract Value shall be considered for PVC calculations and remaining 15% shall be treated as fixed component. The basis for calculation of price variation in each category, their component, Base Index shall be as under:

SL NO	CATEGORY	BASE INDEX	PERCENTAGECOMPONENT('K')				
			CIVIL PACKAGES (See Note A/B/C)			MECHANICAL PACKAGES	Electrical, C&I Material Management/Handling and other labour oriented packages
			A	B	C		
i)	LABOUR (ALL CATEGORIES)	'MONTHLY ALL-INDIA AVERAGE CONSUMER PRICE INDEX NUMBERS FOR INDUSTRIAL WORKERS' published by Labour Bureau, Ministry of Labour and Employment, Government of India. (Website: labourbureau.nic.in)	40	25	30	65	80
ii)	HIGH SPEED DIESEL OIL	Name of Commodity: HSD Commodity Code: 1202000005 (See Note E)	5	3	5	5	5
iii)	WELDING ROD	Name of Commodity: MANUFACTURE OF BASIC METALS Commodity Code: 1314000000 (See Note E)				15	
iv)	CEMENT	Name of Commodity: ORDINARY PORTLAND CEMENT Commodity Code: 1313050003 (See Note E)		20	30		
v)	STEEL (Structural and Reinforcement Steel)	Name of Commodity: MILD STEEL: LONG PRODUCTS Commodity Code: 1314040000 (See Note E)		25			
vi)	All OTHER MATERIALS (Other than	Name of Commodity: ALL COMMODITIES Commodity Code:1000000000 (See Note E)	40	12	20		

	Cement & Steel)						

Note: A) Cement & Steel:Free Issue (BHEL Scope)
B) Cement & Steel :In Contractor Scope
C) Cement in Contractor Scope, and Steel is Free Issue (BHEL Scope)
D) For Composite packages (i.e. Civii+Mechanicai+Eiectrical and/or CI or Civil+Mechanical or Mechanicai+Eiectrical and/or CI}, the COMPONENT ('K') for various categories shall be as per respective packages as above.
E) As per the 'MONTHLY WHOLE SALE PRICE INDEX' for the respective Commodity and Type, published by Office of Economic Adviser, Ministry of Commerce and Industry, Government of India. (Website: http://eaindustry.nic.in/home.asp). Revisions in the index or commodity will be re adjusted accordingly.

2.17.3 #

2.17.4 Payment/recovery due to variation in index shall be determined on the basis of the following notional formula in respect of the identified COMPONENT ('K') viz LABOUR, HIGH SPEED DIESEL OIL, WELDING ROD, CEMENT, STEEL, MATERIALS.

$$P = K \times R \times \frac{(X_N - Xo)}{Xo}$$

Where
P =Amount to be paid/recovered due to variation in the Index for Labour, High Speed Diesel Oil, Welding Rod, Cement, Steel and Materials
K = Percentage COMPONENT ('K') applicable for Labour, High Speed Diesel Oil, Welding Rod, Cement, Steel and Materials
R=Value of work done for the billing month (Excluding Taxes and Duties if payable extra)
X_N = Revised Index for Labour, High Speed Diesel Oil, Welding Rod, Cement, Steel and Materials for the billing month under consideration
Xo = Index for Labour, High Speed Diesel Oil, Welding Rod, Cement, Steel and Materials as on the Base date

2.17.5 Base date shall be the calendar month of the schedule completion date (i.e. Actual start date+ Scheduled Contractual completion period as per Letter of Intent/award and/or work order).

2.17.6 PVC shall not be payable for the ORC amount, Supplementary/Additional Items, Extra works.
However, PVC will be payable for items executed under quantity variation of BOQ items under originally awarded contract.

2.17.7 The contractor shall furnish necessary monthly bulletins in support of the requisite indices from the relevant websites along with his Bills.

2.17.8 The contractor will be required to raise the bills for price variation payments on a monthly basis along with the running bills irrespective of the fact whether any increase/decrease in the index for relevant categories has taken place or not. In case there is delay in publication of bulletins (final figure), the provisional values as published can be considered for payments and arrears shall be paid/recovered on getting the final values.

2.17.9 PVC shall be applicable only, during the extended period of contract (if any) after the scheduled completion period and for the portion of work delayed / backlog for the reasons not attributable to the Contractor.

However total quantum of Price Variation amount payable/recoverable shall be regulated as follows:

i. For the portion of shortfall / backlog not attributable to contractor, PVC shall be worked out on the basis of indices applicable for the respective month in which work is done. Base index shall be applicable as defined in clause 2.17.5

ii. In case of Force majeure, PVC shall be regulated as per (a) or (b) below:

a) Force majeure is invoked before "base date"/ “revised base date" (as explained below) OR immediately after "base date"/ “revised base date" in continuation (i.e. during the period when PVC is not applicable):

1. Base date shall be revised: Revised base date =Previous base date+ duration of Force majeure. No PVC will be applicable for the work done till revised base date.

2. PVC will be applicable for the work done after "base date"/ “revised base date" as the case may be (during extended period when delay is not attributable to contractor). PVC shall be worked out on the basis of indices applicable for the respective month in which work is done with base index as on "base date"/"revised base date" as the case may be.

b) Force majeure is invoked after "base date"/ "revised base date" as the case may be (during extended period when delay is not attributable to contractor) -

1. PVC shall be applicable for the work done after revocation of force majeure.
2. PVC for the work done after revocation of force majeure shall be worked out on the basis of indices applicable for the respective month in which work is done excluding the effect of change in indices during total period of Force majeure(s) invoked after "base date"/ "revised base date" as the case may be. Base index shall be taken as on "base date"/ "revised base date" as the case may be.

iii. The total amount of PVC shall not exceed 15% of the cumulatively executed contract value. Executed contract value for this purpose is exclusive of PVC, ORC, Supplementary/Additional Items and Extra works except extra items due to quantity variation.

13. Clause 2.2 of GCC (Law governing the contract and court jurisdiction) stands revised as follows:

"The contract shall be governed by the Law for the time being in force in the Republic of India. Subject to Clause 2.21.1 or 2.21.2 of this Contract, the Civil Court having original Civil Jurisdiction at Delhi for PSNR, at Kolkata for PSER, at Nagpur for PSWR and at Chennai for PSSR, shall alone have exclusive jurisdiction in regard to all matters in respect of the Contract."

14. Existing Clause 2.21 “ARBITRATION” of GCC has been amended as follows:

2.21 ARBITRATION & CONCILIATION

2.21.1 ARBITRATION:

2.21.1.1 Except as provided elsewhere in this Contract, in case Parties are unable to reach amicable settlement (whether by Conciliation to be conducted as provided in Clause 2.21.2 herein below or otherwise) in respect of any dispute or difference; arising out of the formation, breach, termination, validity or execution of the Contract; or, the respective rights and liabilities of the Parties; or, in relation to interpretation of any provision of the Contract; or. in any manner touching upon the Contract (hereinafter referred to as the ‘Dispute’), then, either Party may, commence arbitration in respect of such Dispute by issuance of a notice in terms of section 21 of the Arbitration & Conciliation Act, 1996 (hereinafter referred to as the ‘Notice’). The Notice shall contain the particulars of all claims to be referred to arbitration in sufficient detail and shall also indicate the monetary amount of such claim. The arbitration shall be conducted by a sole arbitrator to be appointed by the Head of the BHEL Power Sector Region issuing the Contract within 60 days of receipt of the complete Notice. The language of arbitration shall be English.

The Arbitrator shall pass a reasoned award.

Subject as aforesaid, the provisions of Arbitration and Conciliation Act 1996 (India) or statutory modifications or re-enactments thereof and the rules made thereunder as in force from time to time

shall apply to the arbitration proceedings under this clause. The seat of arbitration shall be Kolkata (the place from where the contract is Issued). The Contract shall be governed by and be construed as per provisions of the laws of India. Subject to this provision 2.21.1.1 regarding ARBITRATION, the principal civil court exercising ordinary civil jurisdiction over the area where the seat of arbitration is located shall have exclusive jurisdiction over any DISPUTE to the exclusion of any other court.

2.21.1.2 In case of Contract with Public Sector Enterprise (PSE) or a Government Department, the following shall be applicable:

In the event of any dispute or difference relating to the interpretation and application of the provisions of commercial contract(s) between Central Public Sector Enterprises (CPSEs)/ Port Trusts inter se and also between CPSEs and Government Departments/Organizations (excluding disputes concerning Railways, Income Tax, Customs & Excise Departments), such dispute or difference shall be taken up by either party for resolution through AMRCD (Administrative Mechanism for Resolution of CPSEs Disputes) as mentioned in DPE OM No. 4(1)/2013-DPE(GM)/FTS-1835 dated 22-05-2018 as amended from time to time.

2.21.1.3 The cost of arbitration shall initially be borne equally by the Parties subject to the final allocation thereof as per the award/order passed by the Arbitrator.

2.21.1.4 Notwithstanding the existence of any dispute or differences and/or reference for the arbitration, the Contractor shall proceed with and continue without hindrance the performance of its obligations under this Contract with due diligence and expedition in a professional manner unless the dispute inter-alia relates to cancellation, termination or short-closure of the Contract by BHEL.

2.21.2 CONCILIATION:

If at any time (whether before, during or after the arbitral or judicial proceedings), any Disputes (which term shall mean and include any dispute, difference, question or disagreement arising in connection with construction, meaning, operation, effect, interpretation or breach of the agreement, contract), which the Parties are unable to settle mutually, arise inter-se the Parties, the same may, be referred by either party to Conciliation to be conducted through Independent Experts Committee (IEC) to be appointed by competent authority of BHEL from the BHEL Panel of Conciliators.

Notes:

1. No serving or a retired employee of BHEL/Administrative Ministry of BHEL shall be included in the BHEL Panel of Conciliators.

2. Any other person(s) can be appointed as Conciliator(s) who is/are mutually agreeable to both the parties from outside the BHEL Panel of Conciliators.

The proceedings of Conciliation shall broadly be governed by Part-III of the Arbitration and Conciliation Act 1996 or any statutory modification thereof and as provided in Procedure 2.3 to this GCC. The Procedure 2.3 together with its Formats will be treated as if the same is part and parcel hereof and shall be as effectual as if set out herein in this GCC.

The Contractor hereby agrees that BHEL may make any amendments or modifications to the provisions stipulated in the Procedure 2.3 to this GCC from time to time and confirms that it shall be bound by such amended or modified provisions of the Procedure 2.3 with effect from the date as intimated by BHEL to it.

2.21.3 No Interest payable to Contractor

Notwithstanding anything to the contrary contained in any other document comprising in the Contract, no interest shall be payable by BHEL to Contractor on any moneys or balances including but not limited to the Security Deposit, EMD, Retention Money, RA Bills or the Final Bill,

or any amount withheld and/or appropriated by BHEL etc., which becomes or as the case may be, is adjudged to be due from BHEL to Contractor whether under the Contract or otherwise.

15. Clause no. 2.7.2 and 2.7.3 of Volume-IB-GCC shall be revised as follows:

2.7.2.1 To terminate the contract or withdraw portion of work and get it done through other agency, at the risk and cost of the contractor after due notice of a period of 14 days' by BHEL in any of the following cases:

i). Contractor's poor progress of the work vis-à-vis execution timeline as stipulated in the Contract, backlog attributable to contractor including unexecuted portion of work does not appear to be executable within balance available period considering its performance of execution.
ii). Withdrawal from or abandonment of the work by contractor before completion of the work as per contract.
iii). Non-completion of work by the Contractor within scheduled completion period as per Contract or as extended from time to time, for the reasons attributable to the contractor.
iv). Termination of Contract on account of any other reason (s) attributable to Contractor.
v). Assignment, transfer, subletting of Contract without BHEL's written permission.
vi). Non-compliance to any contractual condition or any other default attributable to Contractor.

Risk & Cost Amount against Balance Work:

Risk & Cost amount against balance work shall be calculated as follows: Risk & Cost Amount= [(A-B) + (A x H/100)]
Where,
A= Value of Balance scope of Work (*) as per rates of new contract
B= Value of Balance scope of Work (*) as per rates of old contract being paid to the contractor at the time of termination of contract i.e. inclusive of PVC & ORC, if any.
H = Overhead Factor to be taken as 5

In case (A-B) is less than 0 (zero), value of (A-B) shall be taken as 0 (zero).

* Balance scope of work (in case of termination of contract):
Difference of Contract Quantities and Executed Quantities as on the date of issue of Letter for 'Termination of Contract', shall be taken as balance scope of Work for calculating risk & cost amount. Contract quantities are the quantities as per original contract. If, Contract has been amended, quantities as per amended Contract shall be considered as Contract Quantities.
Items for which total quantities to be executed have exceeded the Contract Quantities based on drawings issued to contractor from time to time till issue of Termination letter, then for these items total Quantities as per issued drawings would be deemed to be contract quantities.
Substitute/ extra items whose rates have already been approved would form part of contract quantities for this purpose. Substitute/ extra items which have been executed but rates have not been approved, would also form part of contract quantities for this purpose and rates of such items shall be determined in line with contractual provisions.
However, increase in quantities on account of additional scope in new tender shall not be considered for this purpose.

NOTE: Incase portion of work is being withdrawn at risk & cost of contractor instead of termination of contract, contract quantities pertaining to portion of work withdrawn shall be considered as 'Balance scope of work' for calculating Risk & Cost amount.

LD against delay in executed work in case of Termination of Contract:

LD against delay in executed work shall be calculated in line with LD clause no. 2.7.9 of GCC, for the delay attributable to contractor. For limiting the maximum value of LD, contract value shall be taken as Executed Value of work till termination of contract.

Method for calculation of "LD against delay in executed work in case of termination of contract" is given below.

i). Let the time period from scheduled date of start of work till termination of contract excluding the period of Hold (if any) not attributable to contractor = T1

ii) Let the value of executed work till the time of termination of contract= X

iii) Let the Total Executable Value of work for which inputs/fronts were made available to contractor and were planned for execution till termination of contract = Y

iv) Delay in executed work attributable to contractor i.e. T2=[1-(X/Y)] x T1

v) LD shall be calculated in line with LD clause (clause 2.7.9) of the Contract for the delay attributable to contractor taking "X" as Contract Value and "T2" as period of delay attributable to contractor.

2.7.2.2 In case Contractor fails to deploy the resources as per requirement, BHEL can deploy own/hired/otherwise arranged resources at the risk and cost of the contractor and recover the expenses incurred from the dues payable to contractor. Recoveries shall be actual expenses incurred plus 5% overheads or as defined in TCC.

2.7.3 Recoveries arising out of Risk & Cost and LD or any other recoveries due from Contractor

Following sequence shall be applicable for recoveries from contractor:

a) Dues available in the form of Bills payable to contractor, SD, BGs against the same contract.

b) Demand notice for deposit of balance recovery amount shall be sent to contractor, if funds are insufficient to effect complete recovery against dues indicated in (a) above.

c) If contractor fails to deposit the balance amount to be recovered within the period as prescribed in demand notice, following action shall be taken for balance recovery:

i) Dues payable to contractor against other contracts in the same Region shall be considered for recovery.

ii) If recovery cannot be made out of dues payable to the contractor as above, balance amount to be recovered, shall be informed to other Regions/Units for making recovery from the Unpaid Bills/Running Bills/SD/BGs/Final Bills of contractor.

iii) In-case recoveries are not possible with any of the above available options, Legal action shall be initiated for recovery against contractor.

16. Clause 2.24 of GCC (Performance Guarantee for Workmanship)

Term "Special Conditions of Contract" appearing in 3rdline of the current clause 2.24.1,is replaced by "Technical Conditions of Contract"

17. Clause 4.2.1.7 of Special Condition of Contract (SCC)

At the end of Clause 4.2.1.7 (i.e. after the line "Decision of BHEL shall be final and binding on the contractor") following para is to be added

"It is not obligatory on the part of BHEL to provide any tools and tackles or other materials other than those specifically agreed to do so by BHEL. However, depending upon the availability, BHEL /BHEL's Customer handling equipment and other plants may be made available to the contractor on payment of hire charges as fixed, subject to the conditions laid down by BHEL/Customer from time to time. Unless paid in advance, such hire charges, if applicable, shall be recovered from contractor's bill / security deposit or any other due payment in one installment."

18. Clause 9.61 of SCC (NON-COMPLIANCE)

Under NON-COMPLIANCE, at the end of Clause 9.61 (i.e. after the line "Also the amount will be spent for purchasing the safety appliances and supporting the safety activity at site.") following para is to be added:

"In case of any financial deduction made by Customer for lapses of safety other than what is provided above or elsewhere in the contract, the same shall be charged on back-to-back basis on the defaulting contractor without prejudice to any other right spelt anywhere in the tender / contract"

19. Clause 9.1 & 9.2 to 9.62 of SCC (HSE & OHSAS Obligations)

Cl. no. 9.0	No change
Cl. no. 9.1	HSE (Health, safety & Environment): Contractor will comply with HSE (Health, safety & Environment) requirements of BHEL as per "HSE Plan for Site Operations by Sub-contractors" (Document no. HSEP:14, Rev.00) attached with this tender.
Cl. no. 9.2 to 9.62	Deleted

Annexure -B

Terms & Conditions of Reverse Auction

Against this enquiry for the subject item/ system with detailed scope of supply/service as per tender specifications, BHEL may resort to "REVERSE AUCTION PROCEDURE" i.e., ON LINE BIDDING (THROUGH A SERVICE PROVIDER). The philosophy followed for reverse auction shall be English Reverse (No ties).

1. For the proposed reverse auction, technically and commercially acceptable bidders only shall be eligible to participate.
2. Those bidders who have given their acceptance for Reverse Auction (quoted against this tender enquiry) will have to necessarily submit "online sealed bid" in the Reverse Auction. Non-submission of "online sealed bid" by the bidder for any of the eligible items for which techno- commercially qualified, will be considered as tampering of the tender process and will invite action by BHEL as per extant guidelines in vogue.
3. BHEL will engage the services of a service provider who will provide all necessary training and assistance before commencement of on line bidding on internet.
4. In case of reverse auction, BHEL will inform the bidders the details of Service Provider to enable them to contact & get trained for participation in the reverse auction.
5. Business rules like event date, time, bid decrement, extension etc. also will be communicated through service provider for compliance.
6. Bidders have to fax the Compliance form (annexure III) before start of Reverse auction. Without this, the bidder will not be eligible to participate in the event.
7. In line with the NIT terms, BHEL will provide the calculation sheet (e.g., EXCEL sheet) which will help to arrive at "Total Cost to BHEL" which is inclusive of all cost elements in line with terms & conditions of the tender for each of the bidder to enable them to fill-in the price and keep it ready for keying in during the Auction.
8. Reverse auction will be conducted on scheduled date & time.
9. At the end of Reverse Auction event, the lowest bidder value will be known on auction portal.
10. The lowest bidder has to fax/e-mail the duly signed and filled-in prescribed format for price breakup including that of line items, if required, (Annexure IV) as provided on case-to-case basis to Service provider within two working days of Auction without fail.
11. In case BHEL decides not to go for Reverse Auction procedure for this tender enquiry, the Price bids and price impacts, if any, already submitted and available with BHEL shall be opened as per BHEL"s standard practice.
12. Bidders shall be required to read the "Terms and Conditions" section of the auctions site of Service provider, using the Login IDs and passwords given to them by the service provider before reverse auction event. Bidders should acquaint themselves of the "Business Rules of Reverse Auction", which will be communicated before the Reverse Auction.
13. If the Bidder or any of his representatives are found to be involved in Price manipulation/ cartel formation of any kind, directly or indirectly by communicating with other bidders, action *as per extant BHEL guidelines*, shall be initiated by BHEL and the results of the RA scrapped/ aborted.
14. The Bidder shall not divulge either his Bids or any other exclusive details of BHEL to any other party.
15. In case BHEL decides to go for reverse auction, the H1 bidder (whose quote is highest in online sealed bid) will not be allowed to participate in further RA process provided minimum three bidders are left after removal of H1 bidder. In case of tie for H1 bid (identical online sealed bids), 15 minutes' additional time shall be provided and all the participating bidders shall be informed by mail/message on bidding screen to enable bidders submit revised online sealed bids so as to break the tie.

Annexure -C

Certificate by Chartered Accountant on letter head

This is to to Certify that M/S ....., (hereinafter referred to as 'company') having its registered office at ..... is registered under MSMED Act 2006, (Entrepreneur Memorandum No (Part-II) ..... dtd:....., Category:..... (Micro/Small)). (Copy enclosed).

Further verified from the Books of Accounts that the investment of the company as per the latest audited financial year ..... as per MSMED Act 2006 is as follows:

1. **For Manufacturing Enterprises:** Investment in plant and machinery (i.e. original cost **excluding land and building and the items specified by the Ministry of Small Scale Industries vide its** notification No.S.0.1722(E) dated October 5, 2006 :
   Rs.....Lacs
2. **For Service Enterprises:** Investment in equipment (original cost excluding land and building and **furniture, fittings and other items not direCtly related to the service rendered or as may be notified under the MSMED** Act, 2006:
   Rs.....Lacs

(Strike off whichever is not applicable)

The above investment of Rs.....Lacs is within permissible limit of Rs.....Lacs for .....Micro / Small (Strike off which is not applicable) Category under MSMED Act 2006.

Or

The company has been graduated from its original category {Micro/ Small) (Strike off which is not applicable) and the date of graduation of such enterprise from its original category is ..... (dd/mm/yyyy) which is within the period of 3 years from the date of graduation of such enterprise from its original category as notified vide S.O. No. 3322(E) dated 01.11.2013 published in the gazette notification dated 04.11.2013 by Ministry of MSME.

Date:

(Signature)

Name-

Membership number-

Seal of Chartered Accountant

Annexure –D

Specific Clause w.r.t. BOCW Act & Cess Act

1. It shall be the sole responsibility of the contractor as employer to ensure compliance of all the statutory obligations under the Building and other Construction Workers' (Regulation of Employment and Conditions of Service) Act, 1996 and the Building and other Construction Workers' Welfare Cess Act, 1996 and the rules made thereunder.
2. It shall be sole responsibility of the contractor engaging Building Workers in connection with the building or other construction works in the capacity of employer to apply and obtain registration certificate specifying the scope of work under the relevant provisions of the Building and Other Construction Workers' (Regulation of Employment and Conditions of Service) Act, 1996 from the appropriate Authorities.
3. It shall be responsibility of the contractor to furnish a copy of such Registration Certificate within a period of one month from the date of commencement of Work.
4. It is responsibility of the contractor to register under the Building and other Construction Workers' Welfare Cess Act, 1996 and deposit the required Cess for the purposes of the Building and other Construction Workers' (Regulation of Employment and Conditions of Service) Act, 1996 at such rate as the Central Government may , by notification in the Official Gazette, from time to time specify. However, before registering and deposit of Cess under the Building and other Construction Workers' Welfare Cess Act, 1996, the contractor will seek written prior approval from the Construction Manager.
5. In case where the contractor has been accorded written approval by the Construction Manager and the contractor is required to furnish information in Form I and deposit the Cess under the Building and other Construction Workers' Welfare Cess Act, 1996, fails to do so, BHEL reserves right to impose penalty at the rate of 30% of Cess Amount.
6. It shall be sole responsibility of the contractor as employer to get registered every Building Worker, who is between the age of 18 to 60 years of age and who has been engaged in any building or other construction work for not less than ninety days during the preceding twelve months as Beneficiary under the Building and other Construction Workers' (Regulation of Employment and Conditions of Service) Act, 1996.
7. It shall be sole responsibility of the contractor as employer to maintain all the registers, records, notices and submit returns under the Building and other Construction Workers' (Regulation of Employment and Conditions of Service) Act, 1996 and the Building and other Construction Workers' Welfare Cess Act, 1996 and the rules made thereunder.
8. It shall be sole responsibility of the contractor as employer to provide notice of poisoning or occupation notifiable diseases, to report of accident and dangerous occurrences to the concerned authorities under the Building and other Construction Workers' (Regulation of Employment and Conditions of Service) Act, 1996 and the rules made thereunder and to make payment of all statutory payments & compensation under the Employees' Compensation Act, 1923.
9. It shall be responsibility of the Contractor to furnish BHEL on monthly basis, Receipts/ Challans towards Deposit of the Cess under the Building and other Construction Workers' Welfare Cess Act, 1996 and the rules made thereunder along with following statistics :
    (i) Number of Building Workers employed during preceding one month.
    (ii) Number of Building workers registered as Beneficiary during preceding one month.
    (iii) Disbursement of Wages made to the Building Workers for preceding wage month.
    (iv) Remittance of Contribution of Beneficiaries made during the preceding month
10. BHEL shall reimburse the contractor the Cess amount deposited for the purposes of the Building and other Construction Workers' (Regulation of Employment and Conditions of Service) Act, 1996 under the Building and other Construction Workers' Welfare Cess Act, 1996 and the rules made thereunder. However, BHEL shall not reimburse the Fee paid towards the registration of establishment, fees paid towards registration of Beneficiaries and Contribution of Beneficiaries remitted.
11. It shall be responsibility of the Building Worker engaged by the Contractor and registered as a beneficiary under the Building and other Construction Workers' (Regulation of Employment and Conditions of Service) Act, 1996 to contribute to the Fund at such rate per mensem as may be specified by the State government

by notification in the Official Gazette. Where such beneficiary authorizes the contractor being his employer to deduct his contribution from his monthly wages and to remit the same, the contractor shall remit such contribution to the Building and other construction Workers' Welfare Board in such manner as may be directed by the Board , within the fifteen days from such deduction.

12. If any point of time during the contract period, non-compliance of the provisions of the Building and other Construction Workers' (Regulation of Employment and Conditions of Service) Act, 1996 and the Building and other Construction Workers' Welfare Cess Act, 1996 and the rules made thereunder is observed, BHEL reserves the right to withhold a reasonable amount from the payables to discharge any obligations on behalf of Contractors. The reasonable amount shall be decided by the Construction Manager in consultation with Resident Accounts Officer & Head HR and shall be final.

13. The contractor shall declare to undertake any liability or claim arising out of employment of building workers and shall indemnify BHEL from all consequences / liabilities / penalties in case of non compliance of the provisions of the Building and other Construction Workers' (Regulation of Employment and Conditions of Service) Act, 1996 and the Building and other Construction Workers' Welfare Cess Act, 1996 and the rules made thereunder.

ANNEXURE-E

Statewise GST Registration nos.

Sl. No.	State / UT	GST Reg. No.
1	Andhra Pradesh	37AAACB4146P7Z8
2	Assam	18AAACB4146P1ZE
3	Bihar	10AAACB4146P1ZU
4	Chandigarh	04AAACB4146P1ZN
5	Chattishgarh	22AAACB4146P1ZP
6	Daman & Diu	25AAACB4146P1ZJ
7	Delhi	07AAACB4146P1ZH
8	Gujarat	24AAACB4146P1ZL
9	Haryana	06AAACB4146P1ZJ
10	HP	02AAACB4146P1ZR
11	Jharkhand	20AAACB4146P5ZP
12	Karnataka	29AAACB4146P1ZB
13	Kerala	32AAACB4146P1ZO
14	Maharashtra	27AAACB4146P1ZF
15	MP	23AAACB4146P1ZN
16	Punjab	03AAACB4146P2ZO
17	Rajasthan	08AAACB4146P1ZF
18	Tamil Nadu	33AAACB4146P2ZL
19	Telangana	36AAACB4146P1ZG
20	Tripura	16AAACB4146P1ZI
21	UP	09AAACB4146P2ZC
22	Uttarakhand	05AAACB4146P1ZL
23	West Bangal	19AAACB4146P1ZC
24	Mizoram	15AAACB4146P1ZK
25	Orissa	21AAACB4146P1ZR
26	Arunachal Pradesh	12AAACB4146P1ZQ

Annexure- CPP-GST/I

Please arrange to submit this filled-up format along with Tender

Name of the Company	
Address of Company*	
Company Registration Number*	
Name of Partners / Directors	
ALL THE STATES WHERE BIDDER HAS A PLACE OF BUSINESS*	
ALL ADDRESS OF VENDOR MENTIONING THEIR PIN AS PER THE LATEST GST REGISTRATION*	
GSTN OF ALL THE ABOVE NOTED PLACES OF VENDOR*	
Bidder Type: Indian/ Foreign*	
City*	
State*	
Country*	
Postal Code*	
PAN/TAN Number*	
Company's Establishment Year	
Company's Nature of Business*	
Company's Legal Status* {limited /undertaking/joint venture/partnership/other}	
Company Category* {micro unit as per MSME/small unit as per MSME/medium unit as per MSME/ UAN as per Udyog Aadhaar Memorandum/ Ancillary unit/project affected person of this company/ssi/ other} Relevant documents to be submitted as applicable.	
Enter Company's Contact Person Details	
Title(Mr. / Mrs. / Ms. / Dr. / Shri)*	
Contact Name*	
Date Of Birth*	
Correspondence Email*	
(Correspondence Email ID can be same	
as your Login ID. All the mail correspondence	
will be sent only to the Correspondence Email ID.)	
Designation	
Phone*	
Fax*	
Mobile*	

TABLE OF CONTENTS

1. Chapter-1 : General Instructions to Tenderers
   - 1.1. Despatch Instructions
   - 1.2. Submission of Tenders
   - 1.3. Language
   - 1.4. Price Discrepancy
   - 1.5. Qualification of Tenderers
   - 1.6. Evaluation of Bids
   - 1.7. Data to be enclosed
   - 1.8. Authorisation and Attestation
   - 1.9. Earnest Money Deposit
   - 1.10. Security Deposit
   - 1.11. Return of Security Deposit
   - 1.12. Bank Guarantee
   - 1.13. Validity of offer
   - 1.14. Execution of Contract Agreement
   - 1.15. Rejection of Tender and other Conditions

2. Chapter-2
   - 2.1. Definitions
   - 2.2. Law Governing Contract and Court Jurisdiction
   - 2.3. Issue of Notice
   - 2.4. Use of land
   - 2.5. Commencement of Work

2.6. Measurement of Work and Mode of Payment
2.7. Rights of BHEL
2.8. Responsibilities of Contractor in respect of Local Laws, Employment of Workers etc
2.9. Progress Monitoring, Monthly Review and Performance Evaluation
2.10. Time of Completion
2.11. Extension of Time for Completion
2.12. Over Run Compensation
2.13. Interest Bearing Recoverable Advances
2.14. Quantity Variation
2.15. Extra Works
2.16. Supplementary Items
2.17. Price Variation Clause
2.18. Insurance
2.19. Strikes & Lockout
2.20. Force Majeure
2.21. Arbitration and Reconciliation
2.22. Retention Amount
2.23. Payments
2.24. Performance Guarantee for Workmanship
2.25. Closing of Contracts
2.26. Reverse Auction
2.27. Suspension of Business Dealings
2.28. Other Issues

CHAPTER -1

1. GENERAL INSTRUCTION TO TENDERERS

1.1. DESPATCH INSTRUCTION

i) The General Conditions of Contract form part of the Tender specifications. All pages of the tender documents shall be duly signed, stamped and submitted along with the offer in token of complete acceptance thereof. The information furnished shall be complete by itself. The tenderer is required to furnish all the details and other documents as required in the following pages

ii) Tenderers are advised to study all the tender documents carefully. Any submission of tender by the tenderer shall be deemed to have been done after careful study and examination of the tender documents and with the full understanding of the implications thereof. Should the tenderers have any doubt about the meaning of any portion of the Tender Specification or find discrepancies or omissions in the drawings or the tender documents issued are incomplete or shall require clarification on any of the technical aspect, the scope of work etc., he shall at once, contact the authority inviting the tender well in time (so as not to affect last date of submission) for clarification before the submission of the tender. Tenderer's request for clarifications shall be with reference to Sections and Clause numbers given in the tender documents. The specifications and terms and conditions shall be deemed to have been accepted by the tenderer in his offer. Non compliance with any of the requirements and instructions of the tender enquiry may result in the rejection of the tender.

iii) Integrity pact (IP) shall be applicable for all tenders / contracts if indicated in NIT. This integrity pact shall be issued as part of the Tender documents and shall be returned by the bidder along with Techno-commercial bid duly filled, signed and stamped by the authorized signatory who signs the bid. Only those vendors / bidders who have entered into such an IP with BHEL shall be considered qualified to participate in the bidding. Entering into this pact shall be a preliminary qualification.

1.2. SUBMISSION OF TENDERS

1.2.1 The tenderers must submit their tenders to Officer inviting tender as per instructions in the NIT

1.2.2 Tenders submitted by post shall be sent by 'REGISTERED POST ACKNOWLEDGEMENT DUE / by COURIER' and shall be posted with due allowance for any postal/courier delays. BHEL takes no responsibility for delay, loss or non-receipt of tenders sent by post/courier. The tenders received after the specified time of their submission are treated as 'Late Tenders' and shall not be considered under any circumstances. Offers received by Fax/Email/Internet shall be considered as per terms of NIT.

1.2.3 Tenders shall be opened by authorised Officer of BHEL at his office at the time and date as specified in the NIT, in the presence of such of those tenderers or their authorised representatives who may be present

1.2.4 Tenderers whose bids are found techno commercially qualified shall be informed the date and time of opening of the Price Bids and such Tenderers may depute their representatives to witness the opening of the price bids. BHEL's decision in this regard shall be final and binding.

1.2.5 Before submission of Offer, the tenderers are advised to inspect the site of work and the environments and be well acquainted with the actual working and other prevalent conditions, facilities available, position of material and labour, means of transport and access to Site, accommodation, etc. No claim will be entertained later on the grounds of lack of knowledge of any of these conditions.

1.3. LANGUAGE

1.3.1 The tenderer shall quote the rates in English language and international numerals. These rates shall be entered in figures as well as in words. For the purpose of the tenders, the metric system of units shall be used.

1.3.2 All entries in the tender shall either be typed or written legibly in ink. Erasing and over-writing is not permitted and may render such tenders liable for rejection. All cancellations and insertions shall be duly attested by the tenderer.

1.4 PRICE DISCREPANCY:

1.4.1 Conventional (Manual) Price Bid opening : In the case of price bid opening without resorting to Reverse Auction, if there are differences between the rates given by the tenderer in words and figures or in amount worked out by him, the following procedure for evaluation and award shall be followed:

i) When there is a difference between the rates in figures and in words, the rates which corresponds to the amounts worked out by the contractor, shall be taken as correct

ii) When the amount of an item is not worked out by the contractor or it does not correspond with the rate written either in figure or in words, then the rate quoted by the contractor in words shall be taken as correct

iii) When the rate quoted by the contractor in figures and words tallies but the amount is not worked out correctly, the rate quoted by the contractor shall be taken as correct and not the amount.

iv) In case of lumpsum price, if there is any difference between the amount in figures and in words, the amount quoted by the bidder in words shall be taken as correct.

v) In case of omission in quoting any rate for one or more items, the evaluation shall be done considering the highest quoted rate obtained against the respective items by other tenderers for the subject tender. If the tenderer becomes L-1, the notional rates for the omission items shall be the lowest rates quoted for the respective items by the other tenderers against the respective omission items for the subject job and the 'Total quoted price (loaded for omissions)' shall be arrived at. However the overall price remaining the same as quoted originally, the rates for all the items in the 'Total quoted price (loaded for omissions)' shall be reduced item wise in proportion to the ratio of 'Original' total price and the 'Total quoted price (loaded for omissions)''.

vi) The 'Final Total Amount' shall be arrived at after considering the amounts worked out in line with 'i' to 'iv' above.

1.4.2 Reverse Auction: In case of Reverse Auction, the successful bidder shall undertake to execute

the work as per overall price offered by him during the Reverse Auction process. In case of omission of rates, the procedure shall be as per 'Guidelines for Reverse Auction' enclosed.

1.5. QUALIFICATION OF TENDERERS

i) Only tenderers who have previous experience in the work of the nature and description detailed in the Notice Inviting Tender and/or tender specification are expected to quote for this work duly detailing their experience along with offer.

ii) Offers from tenderers who do not have proven and established experience in the field shall not be considered

iii) .Offers from tenderers who are under suspension (banned) by any Unit/Region/Division of BHEL shall not be considered.

iv) Offers from tenderers who do not comply with the latest guidelines of Ministry/Commissions of Govt of India shall not be considered.

1.6. EVALUATION OF BIDS

i) Technical Bids submitted by the tenderer will be opened first and evaluated for fulfilling the Pre Qualification criteria and other conditions in NIT/Tender documents, based on documentary evidences submitted along with the offer

ii) In case the same qualifying experience is claimed by more than one agency, then the agency who has executed the work as per documentary evidence submitted shall only be qualified. Scope of qualifying work should be totally with the agency who has executed and in case it is only labour+consumables without T&P, then the responsibility of execution is assigned to the first agency and not to the agency who has executed only as labour supply contractor. Further, BHEL reserves the right to ask for further proofs including submission of TDS certificates for the said job

iii) In case the qualifying experience is claimed by private organizations based on Work Order and completion certificates from an other private organization, BHEL reserves the right to ask for further proofs including submission of TDS certificates for the said job

iv) Assessing Bidder Capacity for executing the current tender shall be as per Notice Inviting Tender

v) Price Bids of shortlisted bidders shall only be opened either through the conventional price bid opening or through electronic Reverse Auction, at the discretion of BHEL

vi) Price Bids of unqualified bidders shall not be opened. Reasons for rejection shall be intimated in due course after issue of LOI/LOA to successful bidder and receipt of unqualified acceptance from the successful bidder

vii) Bidders are advised to also refer to clause no 2.9.4 regarding evaluation of their performance in ongoing projects for the current tender

1.7. DATA TO BE ENCLOSED

Full information shall be given by the tenderer in respect of the following. Non-submission of this information may lead to rejection of the offer.

i) INCOME TAX PERMANENT ACCOUNT NUMBER

Certified copies of Permanent Account Numbers as allotted by Income Tax Department for the Company/Firm/Individual Partners, etc. shall be furnished along with tender.

ii) ORGANIZATION CHART

The organization chart of the tenderer's organization, including the names, addresses and contact

information of the Directors/Partners shall be furnished along with the offer.

iii) An attested copy of the Power of Attorney, in case the tender is signed by an individual other than the sole proprietor

iv) IN CASE OF INDIVIDUAL TENDERER:
His / her full name, address and place & nature of business.

v) IN CASE OF PARTNERSHIP FIRM
The names of all the partners and their addresses, A copy of the partnership deed/instrument of partnership dully certified by the Notary Public shall be enclosed.

vi) IN CASE OF COMPANIES:

a. Date and place of registration including date of commencement certificate in case of Public Companies (certified copies of Memorandum and articles of Association are also to be furnished).
b. Nature of business carried on by the Company and the provisions of the Memorandum relating thereof.

1.8 AUTHORISATION AND ATTESTATION
Tenders shall be signed by a person duly authorized/empowered to do so. An attested copy of the Power of Attorney, in case the tender is signed by an individual other than the sole proprietor shall be submitted along with the tenders

1.9 EARNEST MONEY DEPOSIT

1.9.1 Every tender must be accompanied by the prescribed amount of Earnest Money Deposit (EMD) in the manner described herein.

i) EMD shall be furnished along with the offer in full as per the amount indicated in the Special Conditions of Contract / NIT
ii) EMD is to be paid in cash (as permissible under Income Tax Act), Pay order or Demand Draft in favour of 'Bharat Heavy Electricals Limited' and payable at Regional HQ issuing the tender.
iii) No other form of EMD remittance shall be acceptable to BHEL
iv) Bidder may opt to deposit "One Time EMD" of Rs. 2.0 lakhs (Rupees Two lakhs only) with BHEL:Power Sector Region HQ issuing the tender, which will enable them to participate in all the future tender enquiries in respect of Erection and Commissioning services issued from the respective office. Interested bidders may clearly send their consent for converting the present EMD into a "One Time EMD" in their offer.
   - Note : The 'One Time EMD' cannot be withdrawn by the tenderers within 3 years from the date of deposit, under any circumstances. The Tenderer who wishes to withdraw after three years will not be allowed to submit 'One Time EMD' again.
v) Bidders who have already deposited such "One Time EMD" of Rs. 2.00 lakh are exempted from submission of EMD for this tender. However a copy of 'One Time EMD' certificate issued by BHEL Regional HQ issuing the tender shall be enclosed along with the offer.

1.9.2 EMD by the bidder will be forfeited as per Tender Documents if

i) After opening the tender, the bidder revokes his tender within the validity period or increases his

earlier quoted rates.

ii) The bidder does not commence the work within the period as per LOI/Contract. In case the LOI / contract is silent in this regard then within 15 days after award of contract.

1.9.3 EMD shall not carry any interest.

1.9.4 In the case of unsuccessful bidders, the Earnest Money will be refunded to them within a reasonable time after acceptance of award by successful tenderer.

1.10 SECURITY DEPOSIT

1.10.1 Upon acceptance of Tender, the successful Tenderer should deposit the required amount of Security Deposit for satisfactory completion of work, as per the rates given below:

SN	Contract Value	Security Deposit Amount
1	Up to Rs. 10 lakhs	10% of Contract Value
2	Above Rs. 10 lakhs upto Rs.50 lakhs	1 lakh + 7.5% of the Contract Value exceeding Rs. 10 lakhs.
3	Above Rs. 50 lakhs	Rs 4 lakhs + 5% of the Contract Value exceeding Rs. 50 lakhs.

1.10.2 The security Deposit should be furnished before start of the work by the contractor.

1.10.3 Security Deposit may be furnished in any one of the following forms

i) Cash (as permissible under the Income Tax Act)
ii) Pay Order / Demand Draft in favour of BHEL.
iii) Local cheques of scheduled banks, subject to realization.
iv) Securities available from Post Offices such as National Savings Certificates, Kisan Vikas Patras etc. (Certificates should be held in the name of Contractor furnishing the security and duly pledged in favour of BHEL and discharged on the back).
v) Bank Guarantee from Scheduled Banks / Public Financial Institutions as defined in the Companies Act. The Bank Guarantee format for Security Deposit shall be in the prescribed formats
vi) Fixed Deposit Receipt issued by Scheduled Banks / Public Financial Institutions as defined in the Companies Act. The FDR should be in the name of the contractor, A/C BHEL, duly discharged on the back.
vii) Security deposit can also be recovered at the rate of 10% from the running bills. However in such cases at least 50% of the Security Deposit should be deposited in any form as prescribed before start of the work and the balance 50% may be recovered from the running bills.
viii) EMD of the successful bidder can be converted and adjusted against the cash portion of Security Deposit excepting for such bidders who have remitted One Time EMD.

NOTE: Acceptance of Security Deposit against Sl. No. (iv) and (vi) above will be subject to hypothecation or endorsement on the documents in favour of BHEL. However, BHEL will not be liable or responsible in any manner for the collection of interest or renewal of the documents or in any other matter connected therewith.

1.10.4 The Security Deposit shall not carry any interest.

1.10.5 In case the value of work exceeds / reduces from the awarded / accepted value, the Security Deposit shall be correspondingly enhanced / reduced as given below:

i) The enhanced part of the Security Deposit shall be immediately deposited by the Contractor or adjusted against payments due to the Contractor.

ii) There will be no reduction in Security Deposit value in case of variation in contract value upto the lower limit specified in Quantity variation clause. In case of reduction of contract value beyond the lower limit specified in Quantity Variation clause, then the Security Deposit shall be re adjusted in proportion.

iii) In case of reduction, the reduced Contract value shall be certified by BHEL Construction Manager after ascertaining / freezing of BOQ / Drawings from the Design / Engineering Centre. The reduced Security Deposit value can only be considered after taking into account the adequacy of the securities held by BHEL to meet the liabilities of the contractor for the contract, and the performance of the contract in general. In such cases, the revised value of Security Deposit shall be worked out only after execution of not less than the lower limit of the revised scope of work/contract value as per quantity variation clause, and as certified by Construction Manager. This reduction in value of Security Deposit shall not entitle the contractor to any amendment of Contract and shall be operated at the discretion of BHEL

iv) Contract value for the purpose of operating the reduced/increased value of Security Deposit due to Quantity Variation, shall be exclusive of Price Variation Clause, Over Run Compensation and Extra works done on manday rates.

1.10.6 The validity of Bank Guarantees towards Security Deposit shall be initially upto the completion period as stipulated in the Letter of Intent/Award + 3 months, and the same shall be kept valid by proper renewal till the acceptance of Final Bills of the Contractor, by BHEL

1.10.7 BHEL reserves the right of forfeiture of Security Deposit in addition to other claims and penalties in the event of the Contractor's failure to fulfill any of the contractual obligations or in the event of termination of contract as per terms and conditions of contract. BHEL reserves the right to set off the Security Deposit against any claims of other contracts with BHEL.

1.11 RETURN OF SECURITY DEPOSIT

Security Deposit shall be refunded/Bank Guarantee(s) released to the Contractor along with the 'Final Bill' after deducting all expenses / other amounts due to BHEL under the contract / other contracts entered into with them by BHEL.

1.12 BANK GUARANTEES

Where ever Bank Guarantees are to be furnished/submitted by the contractor, the following shall be complied with

i) Bank Guarantees shall be from Scheduled Banks / Public Financial Institutions as defined in the Companies Act.

ii) The Bank Guarantees shall be as per prescribed formats.

iii) It is the responsibility of the bidder to get the Bank Guarantees revalidated/extended for the required period (subject to a minimum period of six months), as per the advice of BHEL Site Engineer / Construction Manager. BHEL shall not be liable for issue of any reminders regarding expiry of the

Bank Guarantees.

iv) In case extension/further extensions of any Bank Guarantees are not required, the bidders shall ensure that the same is explicitly endorsed by the Construction Manager and submitted to the Regional HQ issuing the LOI/LOA.

v) In case the Bank Guarantees are not extended before the expiry date, BHEL reserves the right to invoke the same by informing the concerned Bank in writing, without any advance notice/communication to the concerned bidder.

vi) Bidders to note that any corrections to Bank Guarantees shall be done by the issuing Bank, only through an amendment in an appropriate non judicial stamp paper.

vii) The Original Bank Guarantee shall be sent directly by the Bank to BHEL under Registered Post (Acknowledgement Due), addressed to the Subcontracting Department of the respective Region.

1.13 VALIDITY OF OFFER

The rates in the Tender shall be kept open for acceptance for a minimum period of SIX MONTHS from latest due date of offer submission (including extension, if any) . In case BHEL (Bharat Heavy Electricals Ltd) calls for negotiations, such negotiations shall not amount to cancellation or withdrawal of the original offer which shall be binding on the tenderers.

1.14 EXECUTION OF CONTRACT AGREEMENT

The successful tenderer's responsibility under this contract commences from the date of issue of the Letter of Intent by Bharat Heavy Electricals Limited. The Tenderer shall submit an unqualified acceptance to the Letter of Intent/Award within the period stipulated therein.

The successful tenderer shall be required to execute an agreement in the prescribed form, with BHEL, within a reasonable time after the acceptance of the Letter of Intent/Award, and in any case before releasing the first running bill. The contract agreement shall be signed by a person duly authorized/empowered by the tenderer. The expenses for preparation of agreement document shall be borne by BHEL

1.15 REJECTION OF TENDER AND OTHER CONDITIONS

1.15.1 The acceptance of tender will rest with BHEL which does not bind itself to accept the lowest tender or any tender and reserves to itself full rights for the following without assigning any reasons whatsoever:-

a. To reject any or all of the tenders.

b. To split up the work amongst two or more tenderers as per NIT

c. To award the work in part if specified in NIT

d. In case of either of the contingencies stated in (b) and (c) above, the time for completion as stipulated in the tender shall be applicable.

1.15.2 Conditional tenders, unsolicited tenders, tenders which are incomplete or not in the form specified or defective or have been materially altered or not in accordance with the tender

conditions, specifications etc., are liable to be rejected.

1.15.3 Tenders are liable to be rejected in case of unsatisfactory performance of the tenderer with BHEL, or tenderer under suspension (hold/banning /delisted) by any unit / region / division of BHEL or tenderers who do not comply with the latest guidelines of Ministry/Commissions of Govt of India. BHEL reserves the right to reject a bidder in case it is observed that they are overloaded and may not be in a position to execute this job as per the required schedule in line with clause no. 9.0 of the 'NIT'. The decision of BHEL will be final in this regard.

1.15.4 If a tenderer who is a proprietor expires after the submission of his tender or after the acceptance of his tender, BHEL may at their discretion, cancel such tender. If a partner of a firm expires after the submission of tender or after the acceptance of the tender, BHEL may then cancel such tender at their discretion, unless the firm retains its character.

1.15.5 BHEL will not be bound by any Power of Attorney granted by changes in the composition of the firm made subsequent to the execution of the contract. They may, however, recognise such power of Attorney and changes after obtaining proper legal advice, the cost of which will be chargeable to the contractor concerned.

1.15.6 If the tenderer deliberately gives wrong information in his tender, BHEL reserves the right to reject such tender at any stage or to cancel the contract if awarded and forfeit the Earnest Money/Security Deposit/any other money due.

1.15.7 Canvassing in any form in connection with the tenders submitted by the Tenderer shall make his offer liable to rejection.

1.15.8 In case the Proprietor, Partner or Director of the Company/Firm submitting the Tender, has any relative or relation employed in BHEL, the authority inviting the Tender shall be informed of the fact as per specified format, along with the Offer. Failing to do so, BHEL may, at its sole discretion, reject the tender or cancel the contract and forfeit the Earnest Money/Security Deposit.

1.15.9 The successful tenderer should not sub-contract part or complete work detailed in the tender specification undertaken by him without written permission of BHEL's Construction Manager/Site Incharge. The tenderer is solely responsible to BHEL for the work awarded to him.

1.15.10 The Tender submitted by a techno commercially qualified tenderer shall become the property of BHEL who shall be under no obligation to return the same to the bidder. However unopened price bids and late tenders shall be returned to the bidders

1.15.11 Unsolicited discount received after the due date and time of Bid Submission shall not be considered for evaluation. However, if the party who has submitted the unsolicited discount/rebate becomes the L-I party, then the awarded price i.e contract value shall be worked out after considering the discount so offered.

1.15.12 BHEL shall not be liable for any expenses incurred by the bidder in the preparation of the tender irrespective of whether the tender is accepted or not.

CHAPTER-2

2.1 DEFINITION: The following terms shall have the meaning hereby assigned to them except where the context otherwise requires

i) BHEL shall mean Bharat Heavy Electricals Limited (of the respective Power Sector Region inviting the Tender), a company registered under Indian Companies Act 1956, with its Registered Office at BHEL HOUSE, SIRI FORT, NEW DELHI – 110 049, or its Power Sector Regional Offices or its Authorised Officers or its Site Engineers or other employees authorised to deal with any matters with which these persons are concerned on its behalf.

ii) "EXECUTIVE DIRECTOR" or 'GROUP GENERAL MANAGER' or "GENERAL MANAGER (Incharge)" or "GENERAL MANAGER" shall mean the Officer in Administrative charge of the respective Power Sector Region.

iii) "COMPETENT AUTHORITY" shall mean Executive Director or Group General Manager or General Manager (Incharge) or General Manager or BHEL Officers who are empowered to act on behalf of the Executive Director or General Manager (Incharge) or General Manager of BHEL.

iv) "ENGINEER" or "ENGINEER IN CHARGE" shall mean an Officer of BHEL as may be duly appointed and authorized by BHEL to act as "Engineer" on his behalf for the purpose of the Contract, to perform the duty set forth in this General Conditions of Contract and other Contract documents. The term also includes 'CONSTRUCTION MANAGER' or 'SITE INCHARGE' as well as Officers at Site or at the Headquarters of the respective Power Sector Regions.

v) "SITE" shall mean the places or place at which the plants/equipments are to be erected and services are to be performed as per the specification of this Tender.

vi) "CLIENT OF BHEL" or "CUSTOMER" shall mean the project authorities with whom BHEL has entered into a contract for supply of equipments or provision of services.

vii) "CONTRACTOR" shall mean the successful Bidder/Tenderer who is awarded the Contract and shall include the Contractor's successors, heirs, executors, administrators and permitted assigns.

viii) "CONTRACT" or "CONTRACT DOCUMENT" shall mean and include the Agreement of Work Order, the accepted appendices of Rates, Schedules, Quantities if any, General Conditions of Contract, Special Conditions of Contract, Instructions to the Tenderers, Drawings, Technical Specifications, the Special Specifications if any, the Tender documents, subsequent amendments mutually agreed upon and the Letter of Intent/Acceptance issued by BHEL. Any conditions or terms stipulated by the contractor in the tender documents or subsequent letters shall not form part of the contract unless, specifically accepted in writing by BHEL in the Letter of Intent/Award and incorporated in the agreement.

ix) "GENERAL CONDITIONS OF CONTRACT" shall mean the 'Instructions to Tenderers' and 'General Conditions of Contract' pertaining to the work for which above tenders have been called for.

x)	"TENDER SPECIFICATION" or "TENDER" or " TENDER DOCUMENTS" shall mean G eneral Conditions, Common Conditions, Special Conditions, Price Bid, Rate Sch edule, Technical Specifications, Appendices, Annexures, Corrigendums, Amendments, Forms, procedures, Site information, etc and drawings/documents pertaining to the work for which the tenderers are required to submit their offers. Individual specification number will be assigned to each Tender Specification.
xi)	"LETTER OF INTENT" shall mean the intimation by a Letter/Fax/email to the tenderer that the tender has been accepted in accordance with provisions contained in the letter. The responsibility of the contractor commences from the date of issue of this letter and all terms and conditions of the contract are applicable from this date.
xii)	"COMPLETION TIME" sha ll mean the period by 'date/month' specified in the 'Letter of Intent/Award' or date mutually agreed u pon for ha nding over of t he intended scope of work, the erected equipment/plant which are found acceptable by the Engineer, being of required standard and conforming to the specifications of the Contract.
xiii)	"PLANT" shall mean and connote the entire assembly of the plant and equipments covered by the contract.
xiv)	"EQUIPMENT" shall mean equipment, machineries, materials, structural, electricals and other components of the plant covered by the contract.
xv)	"TESTS" shall mean and include such test or tests to be carried out on the part of the contractor as are prescribed in the contract or considered necessary by BHEL, in order to ascertain the quality, workmanship, performance and efficiency of the contractor or part thereof.
xvi)	"APPROVED", "DIRECTED" or "INSTRUCTE D" shall mean approved, directed or instructed by BHEL.
xvii)	"WORK or CONTRACT WORK" shall mean and include supply of all categories of labour, specified consumables, tools and tackles and Plants required for complete and satisfactory site transportation, handling, stacking, storing, erecting, testing and commissioning of the equipments to the entire satisfaction of BHEL.
xviii)	"SINGULAR AND PLURALS ETC" words carrying singular number shall also include plural and vice versa, where the context so requires. Words imparting the masculine Gender shall be taken to include the feminine Gender and wo rds imparting persons shall include any Comp any or Associations or Body of Individuals, whether incorporated or not.
xix)	"HEADING" – The heading in these General Conditions are solely for the purpose of facilitating reference and shall not be deemed to be part thereof or be taken as instructions thereof or of the contract.
xx)	"MONTH" shall mean calendar month unless otherwise specified in the Tender.

xxi) Day' or 'Days' unless herein otherwise expressly defined shall mean calendar day or days of twenty four (24) hours each. A week shall mean continuous period of seven (7) days.

xxii) "COMMISSIONING" shall mean the synchronisation testing and achieving functional operation of the Equipment with associated system after all initial adjustments, trials, cleaning, re-assembly required at site if any, have been completed and Equipment with associated system is ready for taking into service.

xxiii) "WRITING" shall include any manuscript type written or hand written or printed statement or electronically transmitted messages, under the signature or seal or transmittal of BHEL.

xxiv) "TEMPORARY WORK" shall mean all temporary works for every kind required in or for the execution, completion, maintenance of the work.

xxv) 'CONTRACT PRICE' or 'CONTRACT VALUE' shall mean the sum mentioned in the LOI/LOA/Contract Agreement subject to such additions thereto or deductions there from as may be made under provisions hereinafter contained

xxvi) "COMMENCEMENT DATE" or "START DATE" shall mean the commencement/start of work at Site as per terms defined in the Tenderl

xxvii) "SHORT CLOSING" or "FORE CLOSING" of Contract shall mean the premature closing of Contract, for reasons not attributable to the contractor and mutually agreed between BHEL and the contractor

xxviii) "TERMINATION" of Contract shall mean the pre mature closing of contract due to reasons as mentioned in the contract

xxix) "DE MOBILISATION" shall mean the temporary winding up of Site establishment by Contractor leading to suspension of works temporarily for reasons not attributable to the contractor

xxx) "RE MOBILISATION" shall mean the resumption of work with all resources required for the work after demobilization.

2.2 LAW GOVERNING THE CONTRACT AND COURT JURISDICTION

The contract shall be governed by the Law for the time being in force in the Republic of India. The Civil Court having original Civil Jurisdiction at Delhi for PSNR, at Kolkata for PSER, at Nagpur for PSWR and at Chennai for PSSR, shall alone have exclusive jurisdiction in regard to all claims in respect of the Contract. No other Civil Court sh all have jurisdiction in case of any dispute, under this contract

2.3 ISSUE OF NOTICE

2.3.1 Service of notice on contractor

Any notice to be given to the Contractor under the terms of the contract shall be served by sending the same by Registered Post / Speed Post to or leaving the same at the Contractor's last known address of the principal place of business (or in the event of the contractor being a company, to or at its Registered Office). In case of change of address, the no tice shall be served at changed address as notified in writing by the Contractor to BHEL. Such posting or leaving of the notice shall be deemed to be good service of such notice and the time mentioned to the condition for doing any act after notice shall be reckoned from the date so mentioned in such notice.

2.3.2 Service of notice on BHEL

Any notice to be given to BHEL in-charge/Region under the terms of the Contract shall be served by sending the same by post to or leaving the same at BHEL address or changed address as notified in writing by BHEL to the Contractor.

2.4 USE OF LAND

No land belonging to BHEL or their Customer under temporary possession of BHEL shall be occupied by the contractor without written permission of BHEL.

2.5 COMMENCEMENT OF WORK

2.5.1 The contractor shall commence the work as per the time indicated in the Letter of Intent from BHEL and shall proceed with the same with due expedition without delay.

2.5.2 If the contractor fails to start the work within stipulated time as per LOI or as intimated by BHEL, then BHEL at its sole discretion will have the right to cancel the contract. The Earnest Money and/or Security Deposit with BHEL will stand forfeited without any further reference to him without prejudice to any and all of BHEL's other rights and remedies in this regard.

2.5.3 All the work shall be carried out under the direction and to the satisfaction of BHEL.

2.6 MEASUREMENT OF WORK AND MODE OF PAYMENT:

2.6.1 All payments due to the contractors shall be made by e mode only, unless otherwise found operationally difficult for reasons to be recorded in writing
.

2.6.2 For progress running bill payments: - The Contractor shall present detailed measurement sheets in triplicate, duly indicating all relevant details based on technical documents and connected drawings for work done during the month/period under various categories in line with terms of payment as per contract. The basis of arriving at the quantities, weights shall be relevant documents and drawings released by BHEL. These measurement sheets shall be prepared jointly with BHEL Engineers and signed by both the parties.

2.6.3 These measurement sheets will be checked by BHEL Engineer and quantities and percentage eligible for payment under various groups shall be decided by BHEL Engineer. The abstract of quantities and percentage so arrived at based on the terms of payment shall be entered in Measurement Book and signed by both the parties.

2.6.4 Based on the above quantities, contractor shall prepare the bills in prescribed format and work out the financial value. These will be entered in Measurement Book and signed by both the parties. Payment shall be made by BHEL after effecting the recoveries due from the contractor.

2.6.5 All recoveries due from the contractor for the month/period shall be effected in full from the corresponding running bills unless specific approval from the competent authorities is obtained to the contrary.

2.6.6 Measurement shall be restricted to that portion of work for which it is required to ascertain the financial liability of BHEL under this contract.

2.6.7 The measurement shall be taken jointly by persons duly authorized on the part of BHEL and by the Contractor.

2.6.8 The Contractor shall bear the expenditure involved if any, in making the measurements and testing of materials to be used/used in the work. The contractor shall, without extra charges, provide all the assistance with appliances and other things necessary for measurement.

2.6.9 If at any time due to any reason whatsoever, it becomes necessary to re-measure the work done in full or in part, the expenses towards such re measurements shall be borne by the contractor unless such re measurements are warranted solely for reasons not attributable to contractor.

2.6.10 Passing of bills covered by such measurements does not amount to acceptance of the completion of the work measured. Any left out work has to be completed, if pointed out at a later date by BHEL.

2.6.11 Final measurement bill shall be prepared in the final bill format prescribed for the purpose based on the certificate issued by BHEL Engineer that entire works as stipulated in tender specification has been completed in all respects to the entire satisfaction of BHEL. Contractor shall give unqualified "No Claim" Certificate. All the tools and tackles loaned to him sho uld be returned in satisfactory condition to BHEL. The abstract of final quantities and financial values shall also be entered in the Measurement Books and signed by both parties to the contract. The Final Bill shall be prepared and paid within a reasonable time after completion of work.

2.7 RIGHTS OF BHEL

BHEL reserves the following rights in respect of this contract during the original contract period or its extensions if any, as per the provisions of the contract, without entitling the contractor for any compensation.

2.7.1 To withdraw any portion of work and/or to restrict/alter quantum of work as indicated in the contract during the progress of work and get it done through other agencies to suit BHEL's commitment to its customer or in case BHEL decides to advance the date of completion due to other emergent reasons/ BHEL's obligation to its customer.

2.7.2 To terminate the contract or get any part of the work done through other agency or deploy BHEL's own/hired/otherwise arranged resources , at the risk and cost of the contractor after due notice <u>of a period of two weeks by BHEL,</u> in the event of:-

i) Contractor's continued poor progress
ii) Withdrawal from or abandonment of the work before completion of the work
iii) Contractor's inability to progress the work for completion as stipulated in the contract
iv) Poor quality of work
v) Corrupt act of Contractor
vi) Insolvency of the Contractor
vii) Persistent disregard to the instructions of BHEL
viii) Assignment, transfer, sub-letting of contract without BHEL's written permission
ix) Non fulfillment of any contractual obligations
x) In the opinion of BHEL, the contractor is overloaded and is not in a position to execute the job as per required schedule

2.7.3 To meet the expenses including BHEL overheads on the differential cost at 5%, over and above the Liquidated damages/penalties arising out of "Risk & Cost" as explained above under Sl.No. 2.7.2. BHEL shall recover the amount from any money due from Contractor, or from any money due to the Contractor including Security Deposit, or by for feiting any T&P or material of the contractor under this contract or any other contract of B HEL or by any other mean s or any combination thereof

2.7.4 To terminate the contract or to restrict the quantum of work and pay for the portion of work executed in case BHEL's contract with their customer are terminated for any reason, as per mutual agreement.

2.7.5 To effect recovery from any amounts due to the contractor under this or any other contract or in any other form, the moneys BHEL is statutorily forced to pay to anybody, due to contractor's failure to fulfill any of his obligations. BHEL sh all levy overheads of 5% on all such payments along with interest as defined elsewhere in the GCC.

2.7.6 While every endeavour will be made by BHEL to this end, they cannot guarantee uninterrupted work due to conditions beyond their control. The Contractor will not be normally entitled for any compensation/extra payment on this account unless otherwise specified elsewhere in the contract.

2.7.7 In case the execution of works comes to a complete halt or reaches a stage wherein worthwhile works cannot be executed and there is no possibility of commencement of work for a period of not less than two mo nths, due to reasons not attributable to the contractor and other than Force Majeure conditions, BHEL may consider permitting the contractor to de mobilize forthwith and re mobilize at an agreed futur e date. Cost of such demobilization/remobilization shall be mutually agreed. OR C in such cases sha ll not be applicable for the period between the period of demobilization and re mobilisation. The duration of con tract/time extension shall accordingly get modified suitably. In case of any conflict, BHEL decision in this regard shall be final and binding on the contractor.

2.7.8 In the unforeseen event of ino rdinate delay in receipt of materials, drawings, fronts, etc, du e to which inordinate discontinuity of work is an ticipated, BHEL at its discretion may consid er contractor's request to short close the contract in following cases:

a) The balance works (including but not limited to Trial Operation, PG Test, etc) are minor vis a vis the scope of work envisaged as per the contract.
b) There has been no significant work in past 6 months OR no significant work is expected in next 6 months (example in Hydro projects or in projects where work has stopped due to reasons beyond the control of BHEL)
c) The balance works cannot be done within a reasonable period of time as they are dependent on unit shutdown or on other fa cilities of customer or a ny other reasons not attributable to the contractor

At the point of requesting for short closure, contractor shall establish that h e has completed all works possible of completion and he is not able to proceed with the balance works du e to constraints beyond his control. In such a case, the estimated value of the unexecuted portion of work (or estimated value of services to be provided for carrying out milestone/stage payments like

Trial Operation/PG Test, etc) as mutually agreed, shall however be reduced from the final contract value.

2.7.9 LIQUIDATED DAMAGES/PENALTY

If the contractor fails to maintain the required progress of work which results in delay in the completion of the work as per the contractual completion period, BHEL shall have the right to impose Liquidated Damage/Penalty at the rate of 0.5% of the contract value, per week of delay or part thereof subject to a maximum of 10% of the contract value. For this purpose, the period of delay shall be the delay attributable to the Contractor for the completion of work as per contract. Contract Value for this purpose, shall be the final executed value exclusive of ORC, Extra Works executed on Manday rate basis, Supplementary/Additional Items and PVC.

2.8 RESPONSIBILITIES OF THE CONTRACTOR IN RESPECT OF LOCAL LAWS, EMPLOYMENT OF WORKERS ETC.

The following are the responsibilities of the contractor in respect of observance of local laws, employment of personnel, payment of taxes etc. The subcontractor shall fully indemnify BHEL against any claims of whatsoever nature arising due to the failure of the contractor in discharging any of his responsibilities hereunder:

2.8.1 As far as possible, Unskilled Workers shall be engaged from the local areas in which the work is being executed.

2.8.2 The contractor at all times during the continuance of this contract shall, in all his dealings with local labour for the time being employed on or in connection with the work, have due regard to all local festivals and religious and other customs.

2.8.3 The contractor shall comply with all applicable State and Central Laws, Statutory Rules, Regulations etc. such as Payment of Wages Act, Minimum Wages Act, Workmen Compensation Act, Employer's Liability Act, Industrial Disputes Act, Employers Provident Act, Employees State Insurance Scheme, Contract Labour (Regulation and Abolition) Act 1970, Payment of Bonus & Gratuity Act and other Acts, Rules and Regulations for labour as may be enacted by the Government during the tenure of the Contract and having force or jurisdiction at Site. The Contractor shall also give to the local Governing Body, Police and other relevant Authorities all such notices as may be required by the Law.

2.8.4 The contractor shall obtain independent License under the Contract Labour (Regulations and Abolition Act, 1970)as required from the concerned Authorities based on the certificate (Form-V) issued by the Principal Employer/Customer

2.8.5 The contractor shall pay all taxes, fees, license charges, deposits, duties, tolls, royalties, commission or other charges which may be leviable on account of his operations in executing the contract.

2.8.6 While BHEL would pay the inspection fees and Registration fees of Boiler/Electrical Inspectorate,

all other arrangements for site visits periodically by the Inspectorate to site, Inspection certificate etc. will have to be made by contractor. However, BHEL will not make any payment to the Inspectorate in connection with contractor's Welders/Electricians qualification tests etc.

2.8.7 Contractor shall be responsible for provision of Health and Sanitary arrangements (more particularly described in Contract Labour Regulation & Abolition Act), Safety precautions etc. as may be required for safe and satisfactory execution of contract.

2.8.8 The contractor shall be responsible for proper accommodation including adequate medical facilities for personnel employed by him.

2.8.9 The contractor shall be responsible for the proper behavior and observance of all regulations by the staff employed by him.

2.8.10 The contractor shall ensure that no damage is caused to any person/property of other parties working at site. If any such damage is caused, it is responsibility of the contractor to make good the losses or compensate for the same.

2.8.11 All the properties/equipments/components of BHEL/their Client loaned with or without deposit to the contractor in connection with the contract shall remain properties of BHEL/their Client.

2.8.12 The contractor shall use such properties for the purpose of execution of this contract. All such properties/equipments/components shall be deemed to be in good condition when received by the contractor unless he notifies within 48 hours to the contrary. The contractor shall return them in good condition as and when required by BHEL/their Client. In case of non-return, loss, damage, repairs etc, the cost thereof as may be fixed by BHEL Engineer will be recovered from the contractor

2.8.13 In case the contractor is required to undertake any work outside the scope of this contract, the rates payable shall be those mutually agreed upon if the item rates are not mentioned in existing contract

2.8.14 Any delay in completion of works/or non achievement of periodical targets due to the reasons attributable to the contractor, the same may have to be compensated by the contractor either by increasing manpower and resources or by working extra hours and/or by working more than one shift. All these are to be carried out by the contractor at no extra cost.

2.8.15 The contractor shall arrange, coordinate his work in such a manner as to cause no hindrance to other agencies working in the same premises.

2.8.16 All safety rules and codes applied by the Client/BHEL at site shall be observed by the contractor without exception. The contractor shall be responsible for the safety of the equipment/material and works to be performed by him and shall maintain all light, fencing guards, slings etc. or other protection necessary for the purpose. Contractor shall also take such additional precautions as may be indicated from time to time by the Engineer with a view to prevent pilferage, accidents, fire hazards. Due precautions shall be taken against fire hazards and atmospheric conditions. Suitable number of Clerical staff, watch and ward, store keepers to take care of equipment/materials and construction tools and tackles shall be posted at site by the contractor till the completion of work

under this contract.

The contractor shall arrange for such safety devices as are necessary for such type of work and carry out the requisite site tests of handling equipment, lifting tools, tackles etc. as per prescribed standards and practices.

Contractor has to ensure the implementation of Health, Safety and Environment (HSE) requirements as per directions given by BHEL/Customer. The contractor has to assist in HSE audit by BHEL/Customer and submit compliance Report. The contractor has to generate and submit record/reports as per HSE plan/activities as per instruction of BHEL/Customer

2.8.17 The contractor will be directly responsible for payment of wages to his workmen. A pay roll sheet giving all the payments given to the workers and duly signed by the contractor's representative should be furnished to BHEL site for record purpose, if so called for.

2.8.18 In case of any class of work for which there is no such specification as laid down in the contract, such work shall be carried out in accordance with the instructions and requirements of the Engineer.

2.8.19 Also, no idle charges will be admissible in the event of any stoppage caused in the work resulting in contractor's labour and Tools & Plants being rendered idle due to any reason at any time.

2.8.20 The contractor shall take all reasonable care to protect the materials and work till such time the plant/equipment has been taken over by BHEL or their Client whichever is earlier.

2.8.21 The contractor shall not stop the work or abandon the site for whatsoever reason of dispute, excepting force majeure conditions. All such problems/disputes shall be separately discussed and settled without affecting the progress of work. Such stoppage or abandonment shall be treated as breach of contract and dealt with accordingly

2.8.22 The contractor shall keep the area of work clean and shall remove the debris etc. while executing day-to-day work. Upon completion of work, the contractor shall remove from the vicinity of work, all scrap, packing materials, rubbish, unused and other materials and deposit them in places specified by the Engineer. The contractor will also demolish all the hutments, sheds, offices, etc. constructed and used by him and shall clean the debris. In the event of his failure to do so, the same will be arranged to be done by the Engineer and the expenses recovered from the contractor.

2.8.23 The contractor shall execute the work in the most substantial and workman like manner in the stipulated time. Accuracy of work and timely execution shall be the essence of this contract. The contractor shall be responsible to ensure that the quality, assembly and workmanship conform to the dimensions and clearance given in the drawings and/ or as per the instructions of the Engineer.

2.8.24 The Contractor to note that some of BHEL's T&Ps/MMDs may not be insured. The Contractor will take necessary precautions and due care to protect the same while in his custody from any damage/ loss till the same is handed over back to BHEL. In case the damage / loss is due to carelessness/ negligence on the part of the contractor, the Contractor is liable to get them repair/

replaced immediately and in case of his failu re to do so within a reasonable time, BHE L will reserve the right to recover the loss from the contractor.

2.9 PROGRESS MONITORING, MONTHLY REVIEW AND PERFORMANCE EVALUATION

2.9.1 A detailed plan/programme for compl etion of the contractual scope of work as per the time schedule given in the contract shall be jointly agreed between BHEL and Contractor, before commencement of work . The above programme shall be supported by monthwise deployment of resources viz Manpower, T&P, Consumables, etc. Progress will be reviewed pe riodically (Daily/Weekly/Monthly) vis a vis this jointly agreed programme. The Contra ctor shall submit periodical progress reports (Daily/Weekly/Monthly) and other reports/information including manpower, consumables, T&P mobilization etc as desired by BHEL.

2.9.2 Monthly progress review between BHEL and Contractor shall be based on the agreed programme as above, availability of inputs/fronts etc, and constraints if an y, as per prescribed formats. Manpower, T&P and consumable reports as per prescribed formats shall be submi tted by contractor every month. Rele ase of RA Bi lls shall b e contingent upon certification by B HEL Site Engineer of the availability of the above prescribed formats duly filled in and signed.

2.9.3 The burden of proof that the causes leading to any shortfall is not due to any reasons attributable to the contractor is on the contractor himself. The monthly progress review shall record shortfalls attributable to (i) Contractor, (ii) Force Majeure Conditions, and (iii) BHEL

2.9.4 Performance of the Contractor shall be assessed as p er prescribed formats and sh all form the basis for 'Annual/Overall Performance Evaluation' of the Contractor and also for 'Assessment of Capacity of Bidder' for Tenders where the Contractor is a bidder. BHEL reserves the right to revise the evaluation formats during the course of execution of the works

2.10 TIME OF COMPLETION

2.10.1 The time schedule shall be as prescribed in the Contract. The time for completion shall be reckoned from the date of commencement of work at Site as certified by BHEL Engineers

2.10.2 The entire work sha ll be completed b y the contractor within the time schedule or withi n such extended periods of time as may be allowed by BHEL under clause 2.11

2.11 EXTENSION OF TIME FOR COMPLETION

2.11.1 If the completion of work as detailed in the scope of work gets delayed beyond the contract period, the contractor shall request for an extension of the contract and BHEL at its discretion may extend the Contract.

2.11.2 Based on the monthly reviews jointly sig ned, the works balance at the end of original contract period less the backlog attributable to the contractor shall be quantified, and the number of months of 'Time extens ion' required for completion of the same shall be jointly worked out. Within this period of 'Time extension', the contractor is bound to complete the portion of backlog attributable to the contractor. A ny further 'Time extension' or 'Time extensions' at the end of the previous extension shall be worked out similarly.

2.11.3 However if any 'Time extension' is granted to the contractor to facilitate continuation of work and completion of contract, due to backlog attributable to the contractor alone, then it shall be without prejudice to the rights of BHEL to impose penalty/LD for the delays attributable to the contractor, in addition to any other actions BHEL may wish to take at the risk and cost of contractor.

2.11.4 A joint programme shall be drawn for the balance amount of work to be completed during the period of 'Time Extension', along with matching resources (with weightages) to be deployed by the contractor as per specified format. Review of the programme and record of shortfall shall be done

every month of the 'Time extension' period in the same manner as is done for the regular contract period.

2.11.5 During the period of 'Time extension', contractor shall maintain their resources as per mutually agreed program

2.11.6 At the end of total work completion as certified by BHEL Engineer, and upon analysis of the total delay, the portion of time extensions attributable to (i) Contractor, (ii) Force majeure conditions, and (iii) BHEL, shall be worked out and shall be considered to be exhausted in the same order. The total period of time extensions shall be the sum of (i), (ii) and (iii) above and shall be equal to period between the scheduled date of completion and the actual date of completion of contract. LD shall be imposed/levied for the portion of time extensions attributable to contractor and recoverable from the dues payable to the contractor.

2.12 OVERRUN COMPENSATION

2.12.1 Over Run Compensation (ORC) is payable for works done during the extension period, by way of rate revisions for periods beyond original contract period subject to the following terms and conditions.

2.12.2 Rates shall be increased by 10% for the first twelve months of one or more extensions beyond original contract period. For the next twelve months of further extensions if any, rates shall be increased as above by 10% over the previous twelve months, and similarly for each subsequent twelve months extension.

2.12.3 The amount of increase payable per month due to rate revisions is subject to a minimum of Rs 1,00,000/- per month and a maximum of Rs 10,00,000/- per month.

2.12.4 Should there be any 'Time extension' for reasons attributable only to the contractor, then the work shall be executed by the contractor at the rates applicable for the period the work was planned

2.12.5 Payment of ORC shall be regulated as follows:

i) Contractor is entitled to Over Run Compensation (ORC) only for the portion of backlog attributable to BHEL.

ii) 50% of the compensation as per clause 2.12.3 is allocated for deployment of resources agreed as per the joint programme drawn vide 2.11.4. Payment shall however be based on the actual deployment of resources for the month as certified by BHEL, as per weightages assigned therein

iii) 50% of the compensation as per clause 2.12.3, is allocated for achieving of planned progress agreed as per the joint programme drawn vide 2.11.4. Payment shall be on pro rata basis for actual achieved quantities

iv) Total Over Run Compensation shall be limited to 10% of the executed contract value as certified in Final Bill. For this purpose executed contract value excludes PVC, ORC, Supplementary/Additional Items and Extra Works done on Manday rate basis

2.12.6 Contractor shall not be entitled for any Over Run Compensation (ORC) for the portion of backlog attributable to the contractor. Such works shall be executed at the rates applicable for the period the work was planned

2.13 INTEREST BEARING RECOVERABLE ADVANCES

2.13.1 Normally no advance is payable to the contractor. However, advance payment in exceptional circumstances shall be interest bearing and secured through a Bank Guarantee and shall be limited to a maximum of 5% of contract value. This 'Interest Bearing Recoverable Advance' shall be

payable in not less than two installments with any of the installment not exceeding 60% of the total eligible advance.

2.13.2 In exceptional circumstances, with due justification, Competent Authority of BHEL is empowered to approve proposals for payment of additional interim interest bearing advance against Bank Guarantee, for resource augmentation towards expediting work for project implementation.

2.13.3 Bank Guarantee towards 'Interest Bearing Recoverable Advance' shall be atleast 110% of the advance so as to enable recovery of not only principle amount but also the interest portion, if so required.

2.13.4 Contractor shall establish the utilization of advance drawn before the release of next installment.

2.13.5 Payment and recovery of Interest Bearing Recoverable advance shall be at the sole discretion of BHEL and shall not be a subject matter of arbitration.

2.13.6 The rate of interest applicable for the above advances shall be the prime lending rate of State Bank of India prevailing at the time of disbursement of the advance + 2%, and such rate will remain fixed till the total advance amount is recovered

2.13.7 Unadjusted amount of advances paid shall not exceed 5% of the total contract value at any point of time. Recovery of advances shall be made progressively from each Running Bill such that the advance amounts paid along with the interest is fully recovered by the time the contractor's billing reaches 80% of contract value.

2.13.8 Recovery rate per month shall be the sum of:
a. Not less than 10% of Running Bill amount
b. Simple interest up to the date of RA Bill on the outstanding Principle amount/amounts

2.13.9 Contractor to submit Bank Guarantee as per prescribed formats for each of the advance and shall be valid for at least one year or the recovery duration or the balance contract period which ever is later. In case the recovery of dues does not get completed within the aforesaid BG period, the contractor shall renew the BG or submit fresh BG for the outstanding amount and the remaining recovery period.

2.13.10 BHEL is entitled to make recovery of the entire outstanding amount in case the contractor fails to comply with the BG requirement

2.14 QUANTITY VARIATION

2.14.1 The quoted rates shall remain firm irrespective of any variations in the individual quantities. No compensation becomes payable in case the variation of the final executed contract value is within the limits of Plus (+) or Minus (-) 15% of awarded contract value

2.14.2 Compensation due to variation of final executed value in excess of the limits defined in clause above, shall be as follows:

i) In case the finally executed contract value reduces below the lower limit of Contract Value due to quantity variation specified above, the contractor will be eligible for compensation @ 15% of the difference between the lower limit of the contract value and the actual executed value.

ii) In case the finally executed contract value increases above the upper limit of Con tract Value

due to quantity variation specified above, there will be no revision in the rates within the contract period.

2.15 EXTRA WORKS

2.15.1 All rectifications/modifications, revamping, and reworks required for any reasons not due to the fault of the contractor, or needed due to any change in deviation from drawings and design of equipments, operation/maintenance requirements, mismatching, or due to damages in transit, storage and erection/commissioning, and other allied works which are not very specifically indicated in the drawings, but are found essential for satisfactory completion of the work, will be considered as extra works.

2.15.2 Extra works arising on account of the contractor's fault, irrespective of time consumed in rectification of the damage/loss, will have to be carried out by the contractor free of cost. Under such circumstances, any material and consumable required for this purpose will also have to be arranged by the contractor at his cost.

2.15.3 All the extra work should be carried out by a separately identifiable gang, without affecting routine activities. Daily log sheets in the pro-forma prescribed by BHEL should be maintained and shall be signed by the contractor's representative and BHEL engineer. No claim for extra work will be considered/entertained in the absence of the said supporting documents i.e. daily log sheets. Signing of log sheets by BHEL engineer does not necessarily mean the acceptance of such works as extra works.

2.15.4 BHEL retains the right to award or not to award any of the major repair/ rework/modification/rectification/fabrication works to the contractor, at their discretion without assigning any reason for the same

2.15.5 After eligibility of extra works is established and finally accepted by BHEL engineer/designer, payment will be released on competent authority's approval at the following rate.

MAN-HOUR RATE FOR ELIGIBLE EXTRA WORKS: Single composite average labour man-hour rate, including overtime if any, supervision, use of tools and tackles and other site expenses and incidentals, consumables for carrying out any major rework/ repairs/ rectification/ modification/ fabrication as certified by site as may arise during the course of erection, testing, commissioning or extra works arising out of transit, storage and erection damages, payment, if found due will be at Rs 60/- per man hour.

2.15.6 The above composite labour man hour rate towards extra works shall remain firm and not subject to any variation during execution of the work. PVC will not be applicable for extra works. Rate revision, Over Run Charges/compensation etc will not be applicable due to extra works.

2.15.7 Extra Works for Civil Packages shall be regulated as follows

i) Rates for Extra Works arising due to (1) non availability of BOQ (Rate Schedule), OR (2) change in Specifications of materials/works (3) rectification/modification/dismantling & re erecting etc due to no fault of Contractor, shall be in the order of the following:

a) Item rates are to be derived from similar nature of items in the BOQ (Rate Schedule) with applicable escalation derived from All India Consumer Price Index for Whole Sale Commodities.
b) As per CPWD-DSR-2007 (or latest edition) with applicable escalation derived from All India Consumer price Index for Whole Sale Commodities, OR, Notification issued by the office of CPWD for 'Cost Index' in that Region where the project is being executed, whichever is less
c) Item rates are to be worked out on the basis of prevailing market rates mutually agreed between BHEL and Contractor, plus 15% towards Contractor's overheads and profit.

ii) PVC and ORC will not applicable be for (i) above.

2.16 SUPPLEMENTARY ITEMS

2.16.1 For NON Civil Works

Supplementary items are items/works required for completion of entire work but not specified in the scope of work. Subject to certification of such items/works as supplementary items by BHEL Engineer, rates shall be derived on the basis of any one of the following on mutual agreement:

i) Based on percentage breakup/rates indicated for similar/nearby items

ii) In case (i) above does not exist, then BHEL/site may derive the percentage breakup/rates to suit the type of work

2.16.2 For Civil Works

i) Rates for Supplementary Works/Additional Works arising out due to additions/alterations in the original scope of works as per contract subject to certification of BHEL Engineer shall be worked out as under:

a) Item rates which are available in existing BOQ (Rate Schedule) shall be operated with applicable escalation derived from All India Consumer Price Index for Whole Sale Commodities
b) Items of works which are not available in existing BOQ shall be operated as an 'Extra Works' and rate shall be derived as per clause no 2.15.7

ii) Execution of Supplementary Works/Additional Works through the Contractor shall be at the sole discretion of BHEL, and shall be considered as part of executed contract value for the purpose of Quantity Variation as per clause 2.14

iii) BHEL Engineer's decision regarding fixing the rate as above is final and binding on the contractor.

iv) PVC and ORC will not be applicable for (i) above.

2.17 **PRICE VARIATION COMPENSATION**

2.17.1 In order to take care of variation in cost of execution of work on either side, due to variation in the index of LABOUR, HIGH SPEED DIESEL OIL, WELDING ROD, CEMENT, STEEL, MATERIALS, Price Variation Formula as described herein shall be applicable

2.17.2 85% component of Contract Value shall be permitted to be adjusted for variation in various relevant indices during execution of work. The remaining 15% shall be treated as fixed component

2.17.3 The basis for calculation of price variation in each category, their component, Base Index, shall be as under:

SL NO.	CATEGORY	BASE INDEX	COMPONENT ('K')		
			CIVIL PACKAGES (See Note A/B/C)	MECHANICAL PACKAGES	LABOUR ORIENTED

			A	B**	C		PACKAGES (See Note D)
i)	LABOUR (ALL CATEGORIES)	'MONTHLY ALL-INDIA AVERAGE CONSUMER PRICE INDEX NUMBERS FOR INDUSTRIAL WORKERS' published by Labour Bureau, Ministry of Labour and Employment, Government of India. (Website: labourbureau.nic.in)	40	25	30	65	80
ii)	HIGH SPEED DIESEL OIL	Name of Commodity : HSD OIL. Type : INDIVIDUAL COMMODITY (See Note F)	5	3	5	5	5
iii)	WELDING ROD	Name of Commodity : WELDING ROD Type: INDIVIDUAL COMMODITY (See Note F)				15	
iv)	CEMENT	Name of Commodity : GREY CEMENT Type: INDIVIDUAL COMMODITY (See Note F)		20	30		
v)	STEEL (Structural and Reinforcement Steel)	Name of Commodity : a1. IRON & SEMIS Type: GROUP ITEM (See Note F)		25			
vi)	MATERIALS (Other than Cement & Steel)	Name of Commodity: ALL COMMODITIES Type: GROUP ITEM (See Note F)	40	12	20		

Note: A) Cement & Steel : Free Issue (BHEL Scope)
B) Cement & Steel : In Contractor Scope {**: unless otherwise specified in Special Conditions of Contract (SCC) }
C) Cement in Contractor Scope, and Steel is Free Issue (BHEL Scope)
D) Predominantly 'Labour Oriented' packages including Material Handling & Management, Insulation, Painting, Electrical and CI or a combination thereof, which are separately tendered and awarded
E) For Composite packages (i.e. Civil+Mechanical+Electrical/CI or Civil+Mechanical or Mechanical+Electrical/CI), the components for various categories shall be as per respective packages
F) As per the 'MONTHLY WHOLE SALE PRICE INDEX' for the respective Commodity and Type, published by Office of Economic Adviser, Ministry of Commerce and Industry, Government of India. (Website : www.eaindustry.nic.in). Revisions in the index or commodity will be re adjusted accordingly.

2.17.4 Payment/recovery due to variation in index shall be determined on the basis of the following notional formula without any initial absorption, in respect of the identified components viz LABOUR, HIGH SPEED DIESEL OIL, WELDING ROD, CEMENT, STEEL, MATERIALS

$$P = K \times R \times \frac{(X_N - Xo)}{Xo}$$

Where

P = Amount to be paid/recovered due to variation in the Index for Labour, High Speed Diesel Oil, Welding Rod, Cement, Steel and Materials

K = Percentage component applicable for Labour, High Speed Diesel Oil, Welding Rod, Cement, Steel and Materials

R = Value of work done for the billing month (Excluding Taxes and Duties if payable extra)

XN = Revised Index No for Labour, High Speed Diesel Oil, Welding Rod, Cement, Steel and Materials for the billing month under consideration

Xo = Index no for Labour, High Speed Diesel Oil, Welding Rod, Cement, Steel and Materials as on the Base date.

2.17.5 Base date shall be calendar month of the latest date of submission of Tender.

2.17.6 PVC shall not be payable for the ORC amount, Supplementary/Additional Items, Extra works.

2.17.7 The contractor shall furnish necessary monthly bulletins for the necessary indices from the relevant websites along with his Bills.

2.17.8 The contractor will be required to raise the bills for price variation payments on a monthly basis along with the running bills irrespective of the fact whether any increase/decrease in the index for relevant categories has taken place or not. In case there is delay in publication of bulletins (final figure), the provisional values as published can be considered for payments and arrears shall be paid/recovered on getting the final values.

2.17.9 PVC shall be applicable for the entire original contract period plus the extended period. However the Total Quantum of Price Variation amount payable/recoverable shall be regulated as follows:

i) For the portion of backlog attributable to the contractor, the PVC will be based on the average of the indices for the period of the original contract period.
ii) For the period of Force Majeure, the PVC will be limited to the indices applicable at the beginning of the force majeure period.
iii) For the portion of backlog attributable to BHEL, the PVC will be as per the indices applicable for the respective months
iv) The total amount of PVC shall not exceed 20% of the cumulatively executed contract value. Executed contract value for this purpose is exclusive of PVC, ORC, Supplementary/Additional Items and Extra works.

2.18 INSURANCE

2.18.1 BHEL/their customer shall arrange for insuring the materials/properties of BHEL/customer covering the risks during transit, storage, erection and commissioning.

2.18.2 It is the sole responsibility of the contractor to insure his materials, equipments, workmen, etc. against accidents and injury while at work and to pay compensation, if any, to workmen as per Workmen's compensation Act. The work will be carried out in a protected area and all the rules and regulations of the client /BHEL in the area of project which are in force from time to time will have to be followed by the contractor.

2.18.3 If due to negligence and or non-observation of safety and other precautions by the contractors, any accident/injury occurs to the property / manpower belong to third party, the contractor shall have to pay necessary compensation and other expense, if so decided by the appropriate authorities.

2.18.4 The contractor will take necessary precautions and due care to protect the material, while in his custody from any damage/ loss due to theft or otherwise till the same is taken over by BHEL or customer. For lodging / processing of insurance claim the contractor will submit necessary documents. BHEL will recover the loss including the deductible franchise from the contractor, in case the damage / loss is due to carelessness / negligence on the part of the contractor. In case of any theft of material under contractor's custody , matter shall be reported to police by the contractor immediately and copy of FIR and subsequently police investigation report shall be submitted to BHEL for taking up with insurance. However this will not relieve the contractor of his

contractual obligation for the material in his custody.

2.19 STRIKES & LOCKOUT

2.19.1 The contractor will be fully responsible for all disputes and other issues connected with his labour. In the event of the contractor's labour resorting to strike or the Contractor resorting to lockout and if the strike or lockout declared is not settled within a period of one month, BHEL shall have the right to get the work executed through any other agencies and the cost so incurred by BHEL shall be deducted from the Contractor's bills.

2.19.2 For all purposes whatsoever, the employees of the contractor shall not be deemed to be in the employment of BHEL

2.20 FORCE MAJEURE

The following shall amount to Force Majeure:-

2.20.1 Acts of God, act of any Government, War, Sabotage, Riots, Civil commotion, Police action, Revolution, Flood, Fire, Cyclones, Earth quake and Epidemic and other similar causes over which the contractor has no control.

2.20.2 If the contractor suffers delay in the due execution of the contractual obligation due to delays caused by force majeure as defined above, the agreed time of completion of the job covered by this contract or the obligations of the contractor shall be extended by a period of time equal to period of delay, provided that on the occurrence of any such contingency, the contractor immediately reports to BHEL in writing the causes of delay and the contractor shall not be eligible for any compensation.

2.21 ARBITRATION & RECONCILIATION

2.21.1 In case amicable settlement is not reached in the event of any dispute or difference arising out of the execution of the Contract or the respective rights and liabilities of the parties or in relation to interpretation of any provision by the Contractor in any manner touching upon the Contract, such dispute or difference shall (except as to any matters, the decision of which is specifically provided for therein) be referred to the sole arbitration of the arbitrator appointed by BHEL/In charge(Region).

The award of the Arbitrator shall be binding upon the parties to the dispute

Subject as aforesaid, the provisions of Arbitration and Reconciliation Act 1996 (India) or statutory modifications or re enactments thereof and the rules made there under and for the time being in force shall apply to the arbitration proceedings under this clause. The venue of the arbitration shall be the place from which the contract is issued or such other place as the Arbitrator at his discretion may determine

2.21.2 In case of Contract with Public Sector Enterprise (PSE) or a Government Department, the following shall be applicable :

In the event of any dispute or difference relating to the interpretation and application of the provisions of the Contract, such dispute or difference shall be referred to by either party to the arbitration of one of the arbitrators in the department of public enterprises. The award of the arbitrator shall be binding upon the parties to the dispute, provided, however, any party aggrieved by such award may make further reference for setting aside or revision of the award to the Law Secretary, Department of Legal Affairs, Ministry of Law and Justice, Government of India. Upon such reference the dispute shall be decided by the Law Secretary or the Special Secretary or Additional Secretary when so authorized by the Law Secretary, whose decision shall bind the parties hereto finally and conclusively.

2.21.3 The cost of arbitration shall be borne equally by the parties.

2.21.4 Work under the contract shall be continued during the arbitration proceedings

2.22 RETENTION AMOUNT

2.22.1 Retention Amount shall be 5% of executed contract value and shall be recovered at the rate of 5% from each Running Bill admitted, including PVC Bills.

2.22.2 Refund of Retention Amount shall be as follows:

i) 50% of retention amount along with 'Final Bill'

ii) Balance 50% of retention amount shall be retained towards 'Performance Guarantee for Workmanship' and shall become refundable after expiry of Guarantee period, provided all the defects noticed during the guarantee period have been rectified to the satisfaction of BHEL Site Engineer/BHEL Construction Manager, and after deducting all expenses/other amounts due to BHEL under the contract/other contracts entered into by BHEL with them. This portion of the retention amount can be released on commencement of the Guarantee period, on submission of equivalent Bank Guarantee.

2.23 PAYMENTS

Payments to Contractors are made in any one of the following forms

2.23.1 Running Account Bills (RA Bills)

i) These are for interim payments when the contracts are in progress. The bills for such interim payments are to be prepared by Contractor in prescribed formats (RA Bill forms).

ii) Payments shall be made according to the extent of work done as per measurements taken up to the end of the calendar month and in line with the terms of payments described in the Tender documents

iii) Recoveries on account of electricity, water, statutory deductions, etc are made as per terms of contract

iv) Full rates for the work done shall be allowed only if the quantum of work has been done as per the specifications stipulated in the contract. If the work is not executed as per the stipulated specifications, BHEL may ask the contractor to redo the work according to the required specifications, without any extra cost. However, where this is not considered necessary 'OR' where the part work is done due to factors like non-availability of material to be supplied by BHEL 'OR' non availability of fronts 'OR' non availability of drawings, fraction payment against full rate, as is considered reasonable, may be allowed with due regard for the work remaining to be done. BHEL decision in this regard will be final and

binding on the contractor.

v) In order to facilitate part payment, BHEL Site Engineer at his discretion may further split the contracted rates/percentages to suit site conditions, cash flow requirements according to the progress of work

2.23.2 Final Bill

Final Bill' is used for final payment on closing of Running Account for works or for single payment after completion of works. 'Final Bill' shall be submitted as per prescribed format after completion of works as per scope and upon material reconciliation, along with the following.

i) 'No Claim Certificate' by contractor
ii) Clearance certificates where ever applicable viz Clearance Certificates from Customer, various Statutory Authorities like Labour department, PF Authorities, Commercial Tax Department, etc
iii) Indemnity bond as per prescribed format

BHEL shall settle the final bills after deducting all liabilities of Contractor to BHEL

2.24 PERFORMANCE GUARANTEE FOR WORKMANSHIP

2.24.1 Even though the work will be carried out under the supervision of BHEL Engineers the Contractor will be responsible for the quality of the workmanship and shall guarantee the work done for a period of twelve months from the date of commencement of guarantee period as defined in Special Conditions of Contract, for good workmanship and shall rectify free of cost all defects due to faulty erection detected during the guarantee period. In the event of the Contractor failing to repair the defective works within the time specified by the Engineer, BHEL may proceed to undertake the repairs of such defective works at the Contractor's risk and cost, without prejudice to any other rights and recover the same from the Guarantee money.

2.24.2 BHEL shall release the guarantee money subject to the following

i) Contractor has submitted 'Final Bill'
ii) Guarantee period as per contract has expired
iii) Contractor has furnished 'No Claim Certificate' in specified format
iv) BHEL Site Engineer/Construction Manager has furnished the 'No Demand Certificate' in specified format
v) Contractor has carried out the works required to be carried out by him during the period of Guarantee and all expenses incurred by BHEL on carrying out such works is included for adjustment from the Guarantee money refundable.

2.25 CLOSING OF CONTRACTS

The Contract shall be considered completed and closed upon completion of all contractual obligations and settlement of Final Bill or completion of Guarantee period whichever is later. Upon closing of Contract, BHEL shall issue a completion certificate as per standard format, based on specific request of Contractor.

2.26 REVERSE AUCTION:

BHEL reserves the right to go for Reverse Auction for Price Bid Opening by BHEL appointed service provider, instead of opening the submitted sealed price bid in the conventional way. The Business Rules for Reverse Auction shall be as per BHEL guidelines issued from time to time.

2.27 SUSPENSION OF BUSINESS DEALINGS

BHEL reserves the right to take action against Contractors who either fail to perform or Tenderers/Contractor who indulge in malpractices, by suspending business dealings with them in

	line with BHEL guidelines issued from time to time.
2.28	OTHER ISSUES
2.28.1	Value of Non judicial Stamp Paper for Bank Guarantees and for Contract Agreement shall be not less than Rs 100/- unless otherwise required under relevant statutes.
2.28.2	In case of any conflict between the General Conditions of Con tract and Special Conditions of Contract, provisions contained in the Special Conditions of Contract shall prevail.
2.28.3	Unless otherwise specified in NIT, offers from consortium/JVs shall not be considered.
2.28.4	BHEL may not insist for signing of Contract Agreements in respect of low value and short time period contracts like providing services for Hot water flushing, Chemical Cleaning, Transportation, etc

CONTENTS

SN	DESCRIPTION	Chapter	No. OF PAGES
1	General Intent of the Specifications	Chapter-I	
2	General Services to be rendered by the Bidder	Chapter-II	
3	General Technical Requirements (Codes and Standards)	Chapter-III	
4	Obligations of Contractor (In respect of Tools, Tack les, Consumables, etc employment of supervisory staff and workmen)	Chapter-IV	
5	Responsibilities of Contractor (In respect of employment of Labour, Supervisory staff, etc)	Chapter-V	
6	Material Handling, Storage, Preservation, etc	Chapter-VI	
7	Drawings and Documents	Chapter-VII	
8	Inspection and Quality	Chapter-VIII	
9	HSE & OHSAS Obligations	Chapter-IX	
10	RA Bill Payment	Chapter-X	
11	Performance Monitoring	Chapter-XI	
12	Suspension of Business Dealings	Chapter-XII	

1.0	INTENT OF THE SPECIFICATION
1.1	The intent of this erec tion specification is to provide services fo r execution of the project according to most modern and proven techniques and codes. The omission of specific reference to any method, eq uipment or material nec essary for the proper and effic ient services towards installation of the plant shall not relieve th e contractor of the responsibility of providing such services / facilities to complete the work or portion of work awarded to him. The quoted / accepted rates / price shall deem to be inclusive of all such contingencies.
1.2	The work s hall conform to dimensions and tolerances given in v arious drawings and documents that w ill be pr ovided during er ection. If any portion of works is found to be defective in workmanshi p and not conforming to draw ings / documents or other stipulat ions, the contractor shall dismantle and re-do the work duly replac ing the de fective materials at their own cost, failing w hich recoveries, as determined by BHEL, shall be effected from contractor's bills.
1.3	It is not the intent of th is specification to specify herein all the details of erection and commissioning. However, the system shal l conform in all respects to high standards of quality and wo rkmanship for performing t he required duties in a manner acceptable to purc haser who wi ll interpret the meaning of drawings and specifications and shall be entitled to reje ct any work or material, which in his judgments is not in full accordance herewith.
1.4	The omission of specific referenc e to an y fabrication / erecti on or other method, equipment or material necessary for proper and efficient working of the plant shall not relieve the tenderer of the responsibility of providing su ch facilities to complete the work at quoted rates. Any mismatch/ def ect found due to mistak e in fabrication / erection shall have to be re ctified by the vendor free of cost. Inspection by BHEL/Customer does not relieve vendor of his responsibility of executing quality erection.
1.5	The work covered under th is specification is of hi ghly sophisticated nature, requiring the best quality workmanship, supervision, engineering and construction management. The contractor should ens ure proper planning and s uccessful and timely completion of the work to meet the overall project sc hedule. The contractor must deploy adequate quantity of tools & plants, modern / latest construction aids etc. He must also deploy adequate train ed, qualified and exper ienced supervisory staff and skilled personnel.

1.6	Contractor shall erect and commission all the equipmen ts and auxiliaries as per the sequence & methodology prescribed by BHEL de pending upon the technical requirements. Availability of materials and fronts will decide this. BHEL Engineer 's decision regarding cor rectness of the work and method of working shall be final and binding on the contractor. No claims fo r extra payment from the contractor will be entertained on the ground of deviation from the methods / sequence adopted in erection of similar sets elsewhere.
1.7	Following shall be the minimum respons ibility of contract or and have to be provided within finally accepted rates / prices:
1.7.1	Provision as required of all types of labour, s upervisors, engineers, watch and ward, tools & tackles, c alibrated MMEs (Monitoring and Measuring Equipment) as specified and otherwi se required for the w ork, consumables for erection, testing and commissioning including material handling
1.7.2	Achieving Proper out-turn / Turn-over as per BHEL plan and commitment.
1.7.3	Completion of work as per BHEL Schedule
1.7.4	Good quality and accurate workmanship for proper performance of the equipment
1.7.5	Repair and rectification
1.7.6	Preservation / Re-conservation of all components during storage / erection / commissioning till handing over.

2.0	GENERAL SERVICES TO BE RENDERED BY THE BIDDER
2.1	Services for construction, fabrication, equipment erection testing as well as tr ial run & c ommissioning of various equipment and accessories under the contract shall include but not be limited to the following:
2.2	Issuing materials from stor e/open yard from time to ti me for erection as per the construction programme. The Contractor s hall be the custodian of all the materials issued till th e plant/equipment is officia lly taken over by the owner / BHEL after complete erection any successful trial run & commissioning.
2.3	Transport of material to their respective places of erec tion and erection of the complete plant & equipment as supplied under this specification.
2.4	Trial run and commissi oning of individual equipm ent / sub-systems to the satisfaction of Owner/BHEL.
2.5	Deployment of all skilled and un skilled manpower required for erec tion, supervision of erection, watch & ward, commissioning and other services to the rendered under this specification.
2.6	Deployment of all erec tion tools & tackle, constructi on machinery, tr ansportation vehicles and all other implements in ad equate number and s ize, appropriate for the erection work to be handled under scope of this specification except otherwise specified.
2.7	Supply of all consumable s, eg welding electrodes, cleaning agents, diesel oil, lubricant etc as well as materials required for temporary supports, scaffolding etc as necessary for such erection work, unless specified other wise.
2.8	Providing support services for the contractor's erection staff eg construction of site offices, temporary stores, res idential accommodation and transport to work site for erection personnel, watch and w ard for security and safety of the materials under the Contractor's custody etc. as required.
2.9	Maintaining proper docume ntation of all the site activities undertaken by the Contractor as per th e proforma mutuall y agreed w ith BH EL, Submission of monthly progress reports and any such document as and when desired by BHEL/owner, taking approval of all stat utory authorities i.e Boiler Inspector, Factory Inspector, Inspector of Explosiv es etc , as applicable for respective portions of work fall under the jurisdiction of such statutes of laws.
2.10	Any other service, although not specifically called for but required for a contr act of the size and nature indicated in the specification.

3.0	GENERAL TECHNICAL REQUIREMENTS (CODES AND STANDARDS)
3.1	Except where otherwise specified, the plant/equipment shall comply with the appropriate Indian Standard or an agreed internationally accepted Standard Specification as mentioned elsewhere in contract specifications, each incorporating the latest revisions at the time of tendering. Where no internationally accepted standard is applicable, the Bidder shall give all particulars and details as necessary, to enable BHEL to identify all of the plant/equipment in the same detail as would be possible had there been a Standard Specification.
3.2	Where the Bidder proposes alternative codes or standards he shall include in his tender one copy (in English) of each Standard Specification to which materials offered shall comply. In such case, the adopted alternative standard shall be equivalent or superior to the standards mentioned in the specification.
3.3	In the event of any conflict between the codes and standards referred above, and the requirements of this specification, the requirements which are more stringent shall govern.
3.4	Tools used during erection and commissioning shall not be accepted except with the specific approval of the Engineer.

4.0	OBLIGATIONS OF CONTRACTOR
4.1	CONSUMABLES & OTHER ITEMS
4.1.1	The contractor shall provide within finally accepted price / rates, all consumables (excepting those indicated in BH EL scope) like welding electrodes (including alloy steel and stainless steel), filler w ires, TIG filler wires (over & above as supplied by the unit along w ith the plant materials, w hich will be gi ven free of cost to bidder), gases (inert, welding, cutting), solderin g material, dy e penetrants, radiography films, etc. Other erection consumables su ch as tapes, jointi ng compound, grease, mobile oil, M-seal, Ar aldite, petrol, CTC / other cleaning agents, grinding and cutting wheels are to be provided by the contractor. Steel, packers, shims, wooden planks, scaffolding materials hardware it ems etc required for temporary works such as s upports, scaffoldings are to be arranged by the contr actor. Sealing compounds, gaskets, gland pack ing, wooden/concrete sleepers, for temporary work, required for completion of w ork except those which are specifically supplied by manufacturing unit are also to be arranged by the contractor.
4.1.2	All the shims, gaskets and packing, whic h go finally as part of plant equipment, shall be supplied by BHEL free of cost.
4.1.3	It shall be the resp onsibility of the contrac tor to pl an the activities and store sufficient quantity of consumables. Non-availability of any consumable materials or equivalent suggested by BHEL cannot be c onsidered as reason for not attaining the required progress or for additional claim.
4.1.4	<u>TIG Filler wire for Boiler and Filler wires for Electrodes for P91/T91 piping:</u> These shall be supplied by BHEL free of cost as suppli ed by BHEL Manufacturing Units as part of regular su pply. Required quantity as a rrived at by calculation / standards will only be supp lied. It would be the cont ractors' responsibility to account for the consumption of these filler wires. Addi tional consumption beyond standard / calculated quantit y will be at cost recovery basis only unless and otherwise accounted for. Su rplus quantity of TIG filler wire, if any, shall be properly stored and returned to BHEL stores.
4.1.5	It shall be the res ponsibility of the contr actor to obtai n prior approval of BHEL, regarding suppliers, type of electrodes etc befor e procurement of welding electrodes. On r eceipt of electrodes at site these shall be subjected to inspection and approval by BHEL. The contractor shall inform BHEL details regarding type of electrodes, batch number, dat e of expiry etc and produc e test certificate for eac h lot / batch with correlation of batch / lot number with r espective test certificate. No

	electrode without a valid test certificate will to be used.
4.1.6	BHEL reserves the right to reject the us e of any consumable including electrodes, gases, lubricants / special cons umables if it is not found to be of the requir ed standard / make / pur ity or when shelf life has expired. Contractor shall ensure display of shelf life on consumable wherever required and records maintained.
4.1.7	Storage of all consumables inc luding welding electrodes sh all be done as per requirement / instruction of the Engineer by the contractor at his cost.
4.1.8	In case of improper a rrangement for procurement of any consumable, BHEL reserves the right to pr ocure the same fr om any source and recover the cost fro m the Contractor's first subs equent bill at market va lue plus the departmental charges of BHEL from time to time. Postponement of such recovery is normally not permitted. The decision of Engineer in this regard shall be final and binding on the Contractor.
4.1.9	All lubricants and chemic als required for pre-comm issioning, commissioning, testing, preservation and lubricants for trial runs of the equipment shall be supplied by BHEL / BHEL's client. All services including labour and T&P will be provided by the contractor for handling, filling, empt ying, refilling etc. The consumption of lubricants / chemicals shall be properly accounted for. Surplus material if any shall be properly stacked/tagged and returned to BHEL/ CUSTOMER stores at no extra cost to BH EL. BHEL reserves the right to recover costs for wastage by the contractor.
4.1.10	Transportation of oil drums, fr om stores, filling of oil fo r flushing, first filling, subsequent changeover if any, topping/making up till the unit is fully commissioned and handed over to c ustomer is included in scope of this contract. The contractor shall have to return all the empty drums to BHEL / BHEL's client stor e at no extra cost. Any loss / damage to above drums shall be to contractor's account.
4.1.11	All charges on account of Octroi, termin al or sales tax and other duti es on materials obtained from any source for ca rrying out the works in the scope of the contractor shall be borne by the contractor.
4.2	TOOLS AND PLANTS / MONITORING AND MEASURING EQUIPMENT (MMEs)
4.2.1	T&Ps and MMEs to be provided by Contractor
4.2.1.1	All T&Ps and MMEs e xcepting those spec ifically indicated in BHEL scope are to be provided by the Contractor. Contractor has to make his own arrangement at his cost for completing the formalities (includi ng arrangement of Ro ad permits, if any) if required with Sales Tax/VAT authorities, for bringing their materials, plants and

	equipments at site for the execution of work under this contract.
4.2.1.2	All suitable cranes, lifting and transport equipments for material handling at stores/yard/siding of BHEL/Customer are included in scope. BHEL's cranes will not be available for this purpose unless otherwise specifically permitted as per contract conditions
4.2.1.3	All T&Ps to be deployed by the contractor shall have the approval of BHEL Engineer with regard to brand, quality and specification.
4.2.1.4	Indicative list of Major T&Ps in the scope of Contractor are given in the Technical Conditions of Contract. Bidders to note that these are only indicative and as such all other T&P necessary for timely and satisfactory completion of work in scope shall be mobilized by Contractor
4.2.1.5	Timely deployment of adequate T&Ps is the responsibility of the contractor. The contractor shall be prepared to augment the T&P at short notice to match the planned programme and to achieve the milestones.
4.2.1.6	Contractor shall maintain and operate his tools and plants in such a way that major breakdowns are avoided. In the event of major breakdown, contractor shall make alternative arrangements expeditiously so that the progress of work is not hampered.
4.2.1.7	In the event of contractor failing to arrange the required tools, plants, machinery, equipment, material or non-availability of the same owing to breakdown, BHEL will make alternative arrangement at the risk and cost of the contractor. Decision of BHEL shall be final and binding on the contractor
4.2.1.8	The T&P to be arranged by the contractor shall be in proper working condition and their operation shall not lead to unsafe condition. The movements of cranes, and other equipment should be such that no damage / breakage occurs to foundations, other equipments, material, property and men. All arrangements for the movement of the T&P etc shall be the contractor's responsibility.
4.2.1.9	Use of welding generators/ rectifiers only shall be permitted for welding. Use of welding transformers will be subject to specific approval of BHEL engineer.
4.2.1.10	The contractor at his cost shall carry out periodical testing of his construction equipments. Test certificates shall be furnished to BHEL.
4.2.1.11	Contractor shall ensure deployment of serviced and healthy T&Ps including cranes, lifting tackles, wire ropes, manila ropes, winches and slings etc. History card and maintenance records for major T&Ps will be maintained by the contractor and will be made available to BHEL Engineer for inspection as and when required.

	Fitness certificate / Test Certificates of T&P shall have to be subm itted before it is put in use. Identification for suc h T&Ps will be done as per BHEL Engineer's advice. BHEL reserves the right to permit only new slings up to 20 mm and lifting tackles up to 3 MT capacities.
4.2.1.12	Contractor shall ensur e deployment of reliable and calibrated MMEs (Inspectio n measuring and Monitoring equipment). The MMEs shall have test / calibr ation certificates from authorized / Govern ment approved / accredited agencies traceable to National / International standards. Each MME shall have a label indicating calibration status i.e. date of calibration, calibration agency and due date for calibration. A list of such instruments deployed by contractor at site w ith its calibration status is to be submitted to BHEL Engineer for control.
4.2.1.13	Re-testing / re-calibration shall also be arranged at regular interv als during the period of use as advised by BH EL Engineer within the contract price. T he contractor will also have alternate arrangements for su ch MME so that work does not suffer when the particular instrument is sent for ca libration. If any MMEs not found fit for use, BHEL shall have the righ t to stop the use of such item. It will be necessary for the contractor to deploy proper item. Any r eadings taken by the defective instrument will be rec alled and repeat the readings taken by that instrument with a proper one. In case he fails to do so, BH EL may deploy MMEs and retake the readings at contractor's cost.
4.2.1.14	BHEL shall have lien on all T &P, MMEs and other equipment of the contractor brought to the site for the purpose of er ection, testing and co mmissioning. BHEL shall continue to hold the lien on all such items throughout the period of contr act / extended period. The contractor and / or his sub-contractors, without the pr ior written approval of the Engineer, shall remove no material brought to the site.
4.2.1.15	The month wise T&P d eployment plan to execute the work is to be submitted as per relevant format as per the instruction of BHEL. It shall be the contractor's responsibility to deploy the required T&P, for timely and successful completion of the job, to any extent.
4.2.2	Obligations in respect of T&Ps and MMEs provided by BHEL
4.2.2.1	T&P / MMEs being provided by BHEL to sub-c ontractor free of hire charges shall be shared by other subcontractors working for BHEL at site and the allotment done by BHEL Engineer shall be final and binding.
4.2.2.2	BHEL T&P will be issued in basic asse mbled condition. Additional loos e components / sub-as semblies / attachme nts as and when necessary, will be

	issued by BHEL. Assembly of such additional loose components/sub-assemblies/ attachments is in contractor's scope.
4.2.2.3	In case of non-availability of the T&Ps to be provided by BHEL due to break down, major overhauls, distribution pattern or any other reason, the contractor shall plan / amend / alter his activities to meet erection / commissioning targets in consultation with BHEL.
4.2.2.4	void
4.2.2.5	The contractor shall engage trained and experienced operators for the operation of BHEL's T&Ps. Their skill / performance will be checked by BHEL Engineer before they are allowed to operate the same. However checking of skills by BHEL does not absolve the contractor of his responsibilities for proper and safe handling of equipment, consistent good performance of operators and regular performance evaluation of operators.
4.2.2.6	The day to day operation and maintenance of BHEL's T&Ps (Other than cranes) shall be carried out by contractor as per manufacturer's / BHEL's maintenance schedule at his cost. The contractor shall arrange, at his own cost, trained operators, fuel and other consumables for their operation.BHEL shall arrange all spares needed for upkeep of major T&Ps provided like Huck Bolting Machine*, DG Set, Induction Machine and Hydraulic Test pumps. The contractor has to arrange for fixing of the spares; supervision in specialized cases will be provided by BHEL. For upkeep of all other T&Ps supplied by BHEL, spares shall be arranged by the Contractor. BHEL supplied T&Ps shall be maintained in good working condition during the entire period of use. T&Ps in defective / damaged condition shall be rectified promptly to the full satisfaction of BHEL engineer. Contractor shall maintain records for maintenance of major T&Ps. These shall be made available for Inspection whenever required. In case of any lapses on the part of the contractor, BHEL at its own discretion shall get the servicing / repair of equipment done at the risk and cost of the contractor along with BHEL overheads. Further, if there are break downs / damages due to negligence of the contractor, the complete service / repair charges and cost of all the spares damaged with BHEL overheads shall be recovered from contractor's RA bills. *: for operation and maintenance of ESP Huck bolting machine, BHEL shall provide the basic power rig and hose. Balance toolingsie Guns, chuck jaws etc are to be arranged by contractor.
4.2.2.7	void

4.2.2.8	Increasing / shortening of the crane boom to suit work requirements shall have to be arranged by the indenting c ontractor at his cost inc luding restoration to a state as directed by BHEL. All neces sary manpower tools, supp ort, consumables, illumination etc. w ill have to be arrange d by contractor at his cost. If requir ed, contractor has to return the crane with original boom.
4.2.2.9	The area and infrastructure development of the area to be carried out by the customer. However in construc tion projects of this magn itude it is possible that all the areas / approaches may not be ready. In such cases backfilling of approac hes where ever necessary, cons olidation of grou nd and arr angement of sleepers / sand bag filling etc for safe operation / movement of equipment in cluding cranes / trailers etc shall be the responsibility of the cont ractor at his cost. No compensation on this account shall be payable.
4.2.2.10	In the event of contractor not usi ng and maintaining BHEL T&Ps according to BHEL's instructions. BHEL w ill have the right to withdraw su ch item without any notice and no c laim in this regard shall be entertai ned and c ontractor shall be responsible for delay in execution on this account.
4.2.2.11	The contractor shall furnish regular uti lization report of the BHEL T&Ps, as per requirement of BHEL.
4.2.2.12	Any loss / damage to any part of BH EL T&Ps and MMEs shal l be to the contractor's account and any ex penditure on thes e accounts by BHEL will be recovered from the contractor's bill in ca se the contractor fails to make good the loss.
4.2.2.13	It shall be responsibility of the contractor to take delivery of T&Ps and MMEs from stores or place of use by ot her contractor at project site, transport the same to site and return the same to BHEL store / place as intimated by Engineer in project site in good working conditions after use.
4.2.2.14	The contractor shall return BHEL T&Ps and MMEs issued to him in good wor king condition as and w hen desired by BHEL (on completion or reduction of workload). If contractor delays return of T &P and MME, hire charges as applicable shall be levied by BHEL from time, it was requisitioned till the time of actual return. T&Ps and MMEs r eturned in damaged / unserviceable condition shall be got repaired by BHEL at its own dis cretion and entire cos t of repair with BH EL overheads shall be recovered from the contractor.
4.2.2.15	Replacement cost includi ng BHEL overheads in res pect of irreparable / completely damaged / non retu rn of T&Ps and MMEs shall be recovered from the

	contractor's running / final bills
4.2.2.16	Obligations in respect of Cranes provided by BHEL
a)	BHEL will make available the cranes (as per Technical Conditions of Contract) free of charge to the contractor on shar ing basis mainly for the purpos es enumerated/indicated therein. BHEL cranes have to be shared with other agencies / contractors of BHEL. The alloc ation of cranes shall be the discretion of BHEL engineer, which shall be binding on the contractor.
b)	BHEL Cranes may be initially issued in basic assembl ed condition. Any alteration/addition like boom reduction / extension, a ssembly of components/sub-assemblies needed for modulating the capacit y/reach/other features of cranes and restoration to the state as directed by BHEL shall be the contractor's responsibility.
c)	In case the BHEL cranes are not covered under AMC of BHEL, then the day-to-day upkeep and running main tenance like filling / topp ing up of lubricants , changing filters, etc including repair of self starter and dynam o of these cranes shall be the responsibility of the contractor.If on checking it is found that the same is not followed, BHEL will exercise its right to get the job/ works done at the risk and cost of contactor. In case BHEL cranes are covered under AMC awarded by BHEL, then the day-to-day upkeep and running maintenance as described above are excluded fr om scope. However any additional he lpers if any required durin g Preventive/Breakdown Maintenance, Assembly/disassembly shall be provided by contractor at no extra cost. BHEL may also pr ovide cranes through cr ane hiring agencies in w hich case the day-to-day upkeep and runn ing maintenance shall be excluded fr om scope of contractor.
d)	Minor consumables like cotton cloth, co tton waste, etc is to be supplied by Contractor. All spares and lubricants/grease is exclud ed from scope. Contractor to give the requirements of these items well in advance in case the cr anes provided by BHEL are BHEL owned cranes.
e)	Unless otherwise s pecified, trained oper ators for BH EL owned cranes shall be provided by the contr actor. These operators should possess valid licens e for heavy vehicle.
f)	BHEL cranes will be withdrawn for regu lar and capital maintenance as per the respective schedule of main tenance. As far as possibl e such schedules will b e intimated to the contractor in advance and may be adjusted depending on the work

	requirements at site. However no claim whatsoever will be entertained on account of non-availability of cranes.
g)	Where the services of the cranes provided by BHEL are to be shared by other agencies/ contractors of BHEL, the contractor's responsibilities defined above will also be apportioned accordingly to the beneficiary agency. Working arrangements in this regard will be done at site by BHEL engineer and in any case his decision shall be final and binding.
h)	Major breakdowns will be attended to by BHEL. However, in case of breakdowns or damages due to negligence of the contractor, the complete service/repair charges including cost of spares shall be to the account of the contractor, along with BHEL overheads.
4.2.2.17	Obligations in respect of Construction Lift/Elevators provided by BHEL
a)	The total erection including commissioning, maintenance, statutory clearances shall be in included in scope of work. Supervision by the original equipment supplier or their authorized agency shall be arranged for by BHEL, in case found necessary.
b)	All day to day and routine maintenance and checking is to be carried out by the contractor as per the recommendations of the supplier. He should periodically check the brakes and carry out the all works to ensure the safety of all those using the lift/elevator. BHEL shall arrange spares required for upkeep of Construction lift/elevator
c)	The construction lift/elevator should never be overloaded as this can lead to serious accidents. Ensuring all safety aspects in operation of the lift shall be the responsibility of the contractor. Erection of all the required number of landing platforms is included in scope. Landing platforms are to be provided with proper barricades and hand railings.
d)	After completion of contractual scope of work or as per BHEL advice, the temporary elevator/lift shall be dismantled and handed over to BHEL neatly identified/tagged. Temporary structures/platforms etc erected for the elevators/lifts are also to be dismantled and materials to be returned to stores as applicable. The construction and dismantling of the foundations required for the construction/elevator lifts is includedin the scope of the contractor.

5.0	RESPONSIBILITIES OF CONTRACTOR IN RESPECT OF LABOUR, SUPERVISORY STAFF, ETC.
5.1	Refer relevant clauses of General Conditions of Contract (GCC) also in this regard
5.2	The contractor shall deploy all the necessary skilled/semiskilled/ unskilled labour including highly skilled workmen etc. These workmen should have previous experience on similar job. They shall hold valid certificates wherever necessary. BHEL reserves the right to insist on removal of any employee of the contractor at any time if he is found to be unsuitable and the contractor shall forthwith remove him.
5.3	Contractor shall also comply with the requirements of local authorities/ project authorities calling for police verification of antecedents of the workmen, staff etc.
5.4	It is the responsibility of the contractor to engage his workmen in shifts and or on overtime basis for achieving the targets set by BHEL. This target may be set to suit BHEL's commitments to its customer or to advance date of completion of events or due to other reasons. The decision of BHEL in regard to setting the erection and commissioning targets will be final and binding on the contractor.
5.5	Contractor shall provide at different elevation suitable arrangement for urinal and drinking water facility with necessary plumbing & disposal arrangement including construction of septic tank. These installations shall be maintained in hygienic condition at all times.
5.6	The Contractor in the event of engaging 20 or more workmen, shall obtain Independent license under the Contract labour (Regulation and Abolition) Act 1970 from the concerned authorities based on Form -V issued by the Principal Employer/Customer. In order to issue Form-V by Customer, Contractor shall fulfill all Statutory requirements like Insurance Policy, PF Code/PF Account number etc as per the requirement of BHEL/Customer
5.7	Contractor shall deduct the necessary amount towards Provident Fund and contribute equal amount as per Government of India laws. This amount will be deposited regularly to the provident Fund Commissioner. BHEL/Customer may insist for submission of the account code duly certified by PF Commissioner
5.8	Contractor may also be required to comply with provisions of ESI Act in vogue if applicable and submit evidence to BHEL.
5.9	BHEL / customer may insist for witnessing the regular payment to the labour. They may also like to verify the relevant records for compliance with statutory

	requirements. Contractor shall enable such facilities to BHEL / Customer.
5.10	Contractor shall deploy only qualified and experienced engineers/ supervisors. They shall have professional approach in executing the work.
5.11	The contractor's supervisory staff shall execute the work in the most professional manner in the stipulated time. Accuracy of work and aesthetic finish are essential part of this contract. They shall be responsible to ensure that the assembly and workmanship conform to dimensions and tolerances given in the drawings/instructions given by BHEL engineer from time to time.
5.12	The supervisory staff employed by the contractor shall ensure proper outturn of work and discipline on the part of the labour put on the job by the contractor. Also in general they should see that the works are carried out in a safe and proper manner and in coordination with other labour and staff employed directly by BHEL or other contractors of BHEL or BHEL's client.
5.13	It is the responsibility of the contractor to arrange gate pass for all his employees, T&P etc for entering the project premises. Necessary coordination with customer officials is the responsibility of the contractor. Contractor to follow all the procedures laid down by the customer for making gate passes. Where permitted, by customer / BHEL, to work beyond normal working hours, the contractor shall arrange necessary work permits for working beyond normal working hours.
5.14	The actual deployment will of Labour and Engineer/supervision staff shall be so as to satisfy the erection and commissioning targets set by BHEL. If at any time, it is found that the contractor is not in a position to deploy the required engineers/supervisors/workmen due to any reason, BHEL shall have the option to make alternate arrangements at the contractor's risk and cost.The expenditure incurred along with BHEL overheads thereon shall be recovered from the contractor
5.15	Contractor shall not deploy women labour at night.

6.0	MATERIAL HANDLING, STORAGE AND PRESERVATION ETC
6.1	MATERIAL HANDLING AND STORAGE
6.1.1	All the equipments/materials furnished under this contract shall be received from the project stores, sheds / storage yards and transported to pre assembly area / erection site and stored in the storage spaces in a manner so that they are easily retrievable till the contractor erects them. While drawing/lifting material from BHEL / customer stores, the contractor shall ensure that the balance / other materials are stacked back immediately. No claim is admissible on this account
6.1.2	While BHEL will endeavor to store / stack / identify materials properly in their open / close / semi closed / tarpaulins covered storage yard / shed, it shall be contractor's responsibility to assist BHEL in identifying materials well in time for erection. They should take the delivery of the same, following the procedure indicated by BHEL, and transport the material safely to pre-assembly yard / erection site in time, according to program.
6.1.3	The contractor shall take delivery of components, equipment / consumables from storage area after getting the approval of BHEL Engineer on standard indent forms.
6.1.4	The contractor shall identify and deploy necessary Engineers / supervisors / workmen for the above work in sufficient number as may be needed by BHEL, for areas covering their scope.
6.1.5	All the equipment shall be handled very carefully to prevent any damage or loss. No untested wire ropes / slings etc. shall be used for unloading / handling. The equipment shall be properly protected to prevent damage either to the equipment or to the floor where they are stored. The equipment from the stores shall be moved to the actual location at the appropriate time so as to avoid damage of such equipment at site.
6.1.6	Contractor shall ensure that while lifting slings shall be put over the points indicated on the equipment or as indicated in the manufacturer's drawings. Slings / shackles of proper size shall be used for all lifting and rigging purposes. All care shall be taken to safe guard the equipment against any damage. Dragging of piping / valves should be avoided. In case of any damage the cost shall be covered from the contractor.
6.1.7	Approach road conditions from the stores / yards to the erection site may not

	be equipped and ideal for smooth transpor tation of the equi pment. Contractor may have to be adequately prepared to transport the mater ials under the above circumstances without any extra co st. . The contractor may familiar himself with soil conditions at site.
6.1.8	Contractor shall be responsible for examining all the plant and materials issued to him and notify the Engineer im mediately of any damage, shortage, discrepancy etc befor e they are moved ou t of the stores / storage area. T he contractor shall be solely responsible for any shortages or damages in transit, handling, storage and erection of the equipment once re ceived by him. As the erection work will be spread in diff erent areas / locations of t he project, contractor has to arrange sufficient number of w atch / ward personal to avoid any pilferage of material
6.1.9	The contractor shall maintain an accura te and exhaustiv e record-detailing out the list of all equipment re ceived by him for the pur pose of er ection and keep such record open for the inspection of the engineer at any time.
6.1.10	All the material in the custody of cont ractor and stored in the open or dusty locations must be covered with suitable weather proof / fi re retardant covering material wherever applicable and shal l be blocked up on raised level above ground. All covering materials includi ng blocks and s leeper shall be arranged by the contractor at his cost.
6.1.11	If the materi al belonging to the contractor are stored in area other than thos e earmarked for his operation the engineer will have the right to get it moved to the area earmarked for the contractor at the contractors risk and cost.
6.1.12	The contractor shall be responsible for making suitable indoor storage facilities to store all equipment (drawn by the contractor from BHEL / customer stores), which require indoor storage till the time of their inst allation. The Engineer will direct the contractor in this regard, which item in his opinion will require indoor storage, and the contractor shall comply with Engineer's decision.
6.1.13	The contractor shall ens ure that all s urplus / damaged / scrap / unus ed material, packing wood / containers/ s pecial transporting frames etc are returned to BHEL at a plac e in pr oject area identified by the Engineer. The contractor will maintain an account for all items received and returned to BHEL. Any shortage in returning such items sh all be chargeable to the contractor except allowable wastage for packing wood only.
6.1.14	The contractor shall hand ov er all parts / materials remaining extra over the normal requirement with pr oper identification tags to th e stores as directed by

	the concerned BHEL engineer.
6.1.15	The contractor shall ensure that al l the packing materials and protectiv e devices installed on equipment during transit and storage are removed before installation.
6.1.16	It shall be the responsibility of the contractor to keep the work / storage areas in neat, tidy and work ing conditions. All surplus/ unusable packing and other materials shall be remove d and deposited at locati on(s) specified by BHEL within the project premises. If required weighing of the same within the project premises will have to be carried out.
6.2	PRESERVATION OF COMPONENTS
6.2.1	After taking delivery from BHEL / custom er's stores, plant materials storage shall be subjected to the following protection besides other provisions indicated in these specifications elsewhere.
6.2.1.1	Items stored outdoors shall be s tacked up at least six inches (6") off the ground.Items should not be stored in a low lying ar ea where water logging is a possibility. Contractor should hav e sufficient numbers of wooden / concrete / steel sleepers for the job.
6.2.1.2	Motors, valves, electrical equipment, c ontrol equipment and instruments, and special or precision items requiring spec ial care,etc shall be stored indoors. Motor windings shall be kept dry by use of external heat or space heaters.
6.2.1.3	Bearings and other w earing surfaces of plant materials shall be protected against corrosion and kept clean and should be regularly monitored.
6.2.1.4	Insulation materials shall be stored i ndoors or otherwise protected against getting wet/ damaged, using s uitable measures and should be protected from direct rain.
6.2.2	It shall be the responsibility of the contractor to apply preservatives / touch up paints (primer) on equipment handled and er ected by him till su ch time of final painting. It shall be contract or's responsibility to arrange for requir ed paints (primer), thinners, labour, scaffolding ma terials, cleaning materials like wire brush, emery sheets, etc, cleaning of surface and prov ide one coat of preservatives / paints (primer) from time to time as decided by BHEL engineer. The accepted rate shall includ e this w ork also. It is to be noted that suc h painting may have to be done as and when required till such time the final painting is carried out.
6.2.3	The contractor shall effectively protect t he finished work from action of weather

	and from damage or defacement and sha ll cover the finished parts then and there for their protection.
6.2.4	Any failure on the part of contrac tor to carry out works according to abov e clauses will entail BH EL to carry out th e job fr om any other party and recover the cost from contractor.

7.0	DRAWINGS AND DOCUMENTS
7.1	The detailed drawings, specifications available with BHEL engineers will be made available to the contractor during execution of work at site. The contractor will also ensure availability of all drawings / documents at work place.
7.2	Necessary drawings to carry out the erection work will be furnished to the contractor by BHEL on loan, which shall be returned to BHEL Engineer at site after completion of work. Contractor shall ensure safe storage and quick retrieval of these documents.
7.3	The contractor shall maintain a record of all drawings and documents available with him in a register as per format given by BHEL Engineer. Contractor shall ensure use of pertinent drawings / data / documents and removal of obsolete ones from work place and returning to BHEL.
7.4	The data furnished in various annexure enclosed with this tender specification are only approximate and for guidance. However, the change in the design and in the quantity may occur as is usual in any such large scale of work. The contractors quoted rates shall be inclusive of the above factor
7.5	Should any error or ambiguity be discovered in the specification or information the contractor shall forthwith bring the same to the notice of BHEL before commencement of work. BHEL's interpretation in such cases shall be final and binding on the contractor.
7.6	Deviation from design dimensions should not exceed permissible limit. The contractor shall not correct or alter any dimension / details, without specific approval of BHEL.

8.0	INSPECTION AND QUALITY
8.1	Inspection, Quality Assurance, Quality Control
8.1.1	Preparation of quality assurance log sheets and protocols with customer/ consultants/statutory authority, welding logs, NDE records, testing & calibration records and other quality control and quality assurance documentation as per BHEL engineer's instructions, is within the scope of work/specification. These records shall be submitted to BHEL/customer for approval from time to time.
8.1.2	The protocols between contractor and customer/ BHEL shall be made prior to installation for correctness of foundations, materials, procedures, at each stage of installation, generally as per the requirement of customer/ BHEL. This is necessary to ensure elimination of errors or keeping them within tolerable limits and to avoid accumulation and multiplication of errors.
8.1.3	A daily log book should be maintained by every supervisor/engineer of contractor on the job in duplicate (one for BHEL and one for contractor) for detailing and incorporating alignment/clearance / centering / leveling readings and inspection details of various equipments etc. High pressure welding details like serial number of weld joints, welders name, date of welding, details of repair, heat treatment etc. will be documented in welding log as per BHEL Engineer's instructions. Record of radiography containing details like serial number of weld joints, date of radiography, repairs, if any, re-shots etc shall also be maintained as per BHEL Engineer's instructions. Record of heat treatments performed shall be maintained as prescribed by BHEL
8.1.4	The performance of welders will be reviewed from time to time as per the BHEL standards. Welders' performance record shall be furnished periodically furnished for scrutiny of BHEL's Engineer. Corrective action as informed by BHEL shall be taken in respect of those welders not conforming to these standards. This may include removal/ discontinuance of concerned welder(s). Contractor shall arrange for the alternate welders immediately
8.1.5	All the welders shall carry identity cards as per the proforma prescribed by BHEL/Customer/Consultant. Only welders duly authorized by

	BHEL/customer/consultant shall be engaged on the work.
8.1.6	Contractor shall provide all the Measuring Monito ring Equipments (MMEs) required for completion of the w ork satisfactorily. These MMEs s hall be of brand, quality and accuracy specified by BHEL Engineer and should hav e necessary calibration and other certificat es as per the requi rement of BH EL Engineer. Decision of BH EL Engineer regarding acceptanc e or otherwise of the measuring instruments/gauges/tools for the work under this specification, is final and binding on the contractor. BH EL may give an indica tive list of MMEs required for this work and to be made available by the contractor. The list will be reviewed by BHEL and the contract or shall meet any augmentation needed wherever required.
8.1.7	It is the r esponsibility of the contra ctor to prove the accuracy of the testing/measuring/calibrating equipments brought by him based on the periodicity of calibration as called for in the BHEL's quality assurance standards/BHEL Engineer's instructions.
8.1.8	Any re-laying or r e-termination of cables/re-erection of instruments/ recalibration of instruments etc. requir ed due to contractor's mistake or design requirement and found at any stage in spection, shall be carried out by the contractor at no extra cost.
8.1.9	BHEL, Power Sector Regions (PSNR/PSER/PSWR/PSSR) have already been accredited with ISO 9001 certification and as such this work is subject to various audits to meet IS O 9001 requir ements. On e particular aspect which needs special mention is about arrangement of calibrat ion of instruments by the contractor. Contractor shallensure deployment of reliable andcalibratedMMEs (Measuring and Monitoring Equipments). The MMEs shall have test / calibration certificates from authorised / Government approved / Accredited agencies tr aceable to National / Internat ional Standards. Re-testing / re-cal ibration shall also be a rranged at regular intervals during the period of use as advised by BHEL Engineer wit hin the contract price. T he contractor will also have alternate arrangements for such MMEs so that work does not suffer when the particular equipment / ins trument is sent for calibration. Also if any MMEs not found fit for use, BHEL shall have the right to stop the use of such item an d instruct the contractor to deploy proper item and recall ie repeat the readin gs taken by that instrume nt, failing which BHEL may deploy MME and retake the readings at Contractor's cost.
8.1.10	Re-work necessitated on account of use of invalid MMEs shall be entirely to the

	contractor's account. He shall be responsible to ta ke all corrective actions, including resource augmentation if any, as specified by BHEL to make-up for the loss of time.
8.1.11	In the courses of erection, it may become necessary to carry repeated checks of the work with instruments recently calibrated, re-calibrated. BHEL may counter/ finally check the measurements with their own MMEs. Contractor shall render all assistance in conduct of such counter/final measurements.
8.1.12	Total Quality is the w atchword of the work and Cont ractor shall strive to achieve the Quality Standards, procedures laid down by BHEL. He shall follow all the instructions as per BHEL drawings and Quality Standards.
8.2	Stage Inspection By FES/QA Engineers
8.2.1	Apart fr om day-to-day insp ection by BH EL Engineers stationed at Site an d Customer's Engineers, st age ins pection of equipment s under er ection and commissioning at various sta ges shal l also be conducted b y teams of Engineers from F ield Engineering Services of BHEL's Manufacturin g Units, Quality Assurance teams from F ield Quality Assurance, Unit/Factory Quality Assurance and Commissionin g Engineers from Technic al Services etc . Contractor shall arrange all labour, to ols and tackles etcalong with proper access for such stage inspections free of cost.
8.2.2	Any modifications suggested by BHEL FES and QA Engineers' team shall be carried out. Claims of contra ctor, if any, shall be deal t as per Section 13, and provided such modi fications have not arisen for reasons at tributable tothe contractor.
8.3	Statutory Inspection of Work
8.3.1	The work to be exec uted under these specifications has to be offered for inspection, at appropriate stages of work completion, to various statutory authorities for compliance with applicable regulations. The work related statutory inspections, though not limited to, are as under: 1) Inspectorate of Steam Boilers and Smoke Nuisance 2) Electrical Inspector 3) Factory Inspector, Labour Commissioner, PF Commissioner and other authoritiy connected to this project work

	The scope includes getting the approvals from the st atutory authorities, which includes arranging for inspecti on visits of statutory author ity periodically as per BHEL Engineer's instructions, arranging materials for ground inspection, taking rub outs for the pr essure parts to be offered for inspecti on, submitting co-related inspection reports, documents, radiographs etc and following up the matter with them. C ontractor shall also make all arrangement s for offering the Products / Systems for inspection at loca tion, as applicable, to the concerned authority.
8.3.2	Contractor should be qualified to execute pressure parts & piping w ork coming under the purview of IBR, for which he sh ould register himself with C IB of state concerned. contractor al so should be aware of the latest IBR regulations and Electricity Act, including the amendments thereof.
8.3.3	Contractor shall comply with 'Qualification Tests for welders engaged in welding of Boilers and Steam Pipes under C onstruction, Erection and Fabrication at Site in India and in repairing Boilers and steam pipes by welding' in line with Chapter XIII of Indian Boil er Regulations-1950, for testing his welders / men / workers, including all associated fees, procedures, required instruments and equipments and their calibration there of. It shall b e contractor's respons ibility to obtain appr oval of Statutor y Au thorities, wherever applicable, for the conducting of any wo rk which comes under the purview of these authorities, at his cost.
8.3.4	The following fees shall be excluded from scope of Contractor: 1. Registration Fee as per Regulation 385 of Chapter IX of Indian Boiler Regulations-1950 2. Fees for inspection of Bo iler at the site of Cons truction as per Regulation 395 A, sl no 4 of Chapter IX of Indian Boiler Regulations-1950 However all other fees like vis it fees charged by the Boiler Inspector and other arrangements for his visit or visit s till sa tisfactory completion of w ork, shall be included in scope of Contractor
8.4	The Quality Management System of BHEL, Pow er Sector Regions (PSNR/PSER/PSWR/PSSR) have already been certified and accredited under ISO 9002 standards in this regard. The basic philos ophy of the Quality Management System is to define the organizational r esponsibility, work as per

	documented procedures, verify the output with respect to acceptance norms, identify the non-conforming product/ procedure and take corrective action for removal of non-conformance specifying the steps for avoiding recurrence of such non-conformities, & maintain the relevant quality records. The nonconformities are to be identified through the conduct of periodic al audit of implementation of quality systems at various locations/stages of work. Suppliers/vendors of various products/services contributing in the work are also considered as part of the quality management system. .as such the contractor is expected not only to conform to the quality management system of BHEL but also it is desirable that they themselves are accredited under any quality management system standard.
8.5	Field Quality Assurance
8.5.1	Contractor shall carry out all activities conforming to the approved Field Quality Plan (FQP) as revised from time to time. Total quality shall be the watchword of the work and contractor shall strive to achieve the quality standards, procedures laid down by BHEL. He shall follow all the instructions as per BHEL drawings and quality standards. Contractor shall provide the services of quality assurance engineer as per the relevant clauses.

9.0	OCCUPATIONAL HEALTH, SAFETY & ENVIRONMENT MANAGEMENT/ QUALITY ASSURANCE PROGRAMME: BHEL, Power Sector Regions (PSNR/ER/WR/SR) are each certified for ISO 9001. Quality of work to customer's satisfaction and fu lfillment of system requirements are the essenc e of ISO 9001 certificat ion. BHEL, PS Regions have HSE certification (ISO 14001 & OH SAS 18001) and ther efore Contractor also shall organis e/ plan/ perform all their activities to meet with the applicable requirements of these standards.
9.1	HSE (Health, safety & Environment): Contractor will comply with HSE (Health, safety & Environment) requirements of BHEL. HSE requirements in brief, are given below :-
9.1.1	Contractor will nominate one of their qualified an d experienced employees as Safety Officer, who will be respons ible for all HSE related iss ues of contractors work area. Saf ety Officer will h ave authority to stop a ny activity, in case h e observes that the activity is not being carried out in safe manner. He will conduct surprise inspection as well as periodic inspection/drill (at least once in a month) and submit such reports to BH EL. He will conduct periodic meetings with supervisors of different working gr oups and explain HSE issues and use of PPEs to them. Reports of such meetings will be submitted to BHEL. Contractor will develop suitable w ork procedures based upon HSE guidelines and OCPs and implement it. Such work procedures will consist of Area of work, T& P Details, Work Procedure, PP E requirements etc. Pleas e refer Schedule VIII of BOCW Rules for number of safety officers, qualification, duties etc. Contractor should highlight the requirement of safety to staff and labour through daily tool box meeting before start of the days job. Contractor to also submit monthly safety reports as per the format/procedure of BHEL.
9.1.2	The contractor shall arrange induction and regul ar health check of their employees as per s chedule VII of BOCW rules by aregistered medical practitioner. The contr actor shall take special care of the employees affected with occupational diseases under rule 230 and schedule II of BOCW Rules. The employees not meeting the fitness requi rement should not be engaged for such job
9.1.3	Following personnel pr otective equipments (PPEs), in adeq uate numbers, will

	be made available at site & their regular use by all concerned will be ensured :-
	- HELMET
	- SAFETY GOGGLES & WELDING FACE SHIELDS
	- SAFETY BELTS AND PROTECTIVE NET FOR WORKING AT HEIGHT
	- SAFETY SHOES
	- EAR PLUG
	- ANY OTHER SAFETY EQUIPMENT REQUIRED FOR SAFE COMPLETION OF THE WORK
	Contractor to also submit monthly reports on above as per the format/procedure of BHEL.
9.1.4	Providing appropriate First Aid facilities for prompt treatment of injuries and illness at work place. Arranging training to contractor workmen/ employees for giving first aid.
9.1.5	Arranging ambulance in case of any emergency situation .
9.1.6	Identification of nearest hospital and health check-up of workmen/employees
9.1.7	Providing filtered drinking water at work place in cool container.
9.1.8	Providing Canteen, Rest Room, Washing facilities to the contracted employees as per provisions of Contract Labour Regulation Act 1970 (Chapter V).
9.1.9	Providing appropriate fire fighting equipment at designated work place and nominate a fire officer/warden adequately trained for his job.
9.1.10	Identification of nearest fire station and display contact telephone nos. / person's name around work places for cases of emergencies .
9.1.11	Providing adequate no. of 24 V sources and ensure that no hand lamps are operating at voltage level above 24 Volts.
9.1.12	Fulfilling safety requirements at all power tapping points.
9.1.13	Red & White caution tape of proper width(1.5 to 2 inch) to be used for cordoning unsafe area such as open trench, excavation area etc.
9.1.14	Providing contractors company logo on cloths /uniform/ proper identity cards with photographs, for correct identification of people working at project site .
9.1.15	High/ Low pressure welders to be identified with separate colourclothings. No welders will be deployed without passing appropriate tests and holding valid welding certificates. Approved welding procedure should be displayed at work place.
9.1.16	Displaying safe handling procedures for all chemicals such as lube oil, acid, alkali, sealing compounds etc , at work place .

9.1.17	All scaffolding/ pla tforms should be made from materials of appropr iate quality/grade so that th ese are safe for use. It should be certified/declared safe for use by an exper ienced contractor person, before any scaffolding/platform is used. Please refer IS:3696 part 1&2 and 4014 part 1 & 2
9.1.18	All T&Ps/ MMEs should be of reputed brand/appropr iate quality & must h ave valid test/calibration certificates bearing endorsement from competent authority of BHEL.. Contractor to also submit monthly reports of T&Ps deployed and validity test certificates to BHEL safety Officer as per the format/pr ocedure of BHEL.
9.1.19	Ensure that the regula tory requirement of excessive weight limit (to carry/lift/ move weights beyond prescribed limits) for male and female w orkers are complied with.
9.1.20	Safety slogan, Safety/ Caution boards , wherever required to be displayed in consultation with BHEL.
9.1.21	Take suitable measures for w aste management and environment related laws/legislation as a part of normal c onstruction activities. Compliance with the legal requirements on storage/ di sposal of paint drums (including the empty ones), Lubricant c ontainers, Chemical Containers, and transportation and storage of hazardous chemicals will be strictly maintained. Ens ure proper cleanliness of work place, housek eeping and waste management (including proper waste disposal) on daily basis.
9.1.22	It is imperative on the part of the contractor to join and effectively contribute in joint measures such as tree plantati on, environment protection, c ontributing towards social upliftment, conversion of packin g woods to school furniture, keeping good relation with local populace etc.
9.1.23	The contractor s hall carry out periodic air and water quality c heck and illumination level chec king in his area of wor k place and take s uitable control measure.
9.1.24	The Contractor is required to pr ovide proper safety net systems (IS-11057) where ever the hazard of fall from height is present as per instruction of BH EL Engineer. The safety nets shall be fire resistant, duly tested and s hall be of ISI Mark and the nets shall be located as per site requir ements to arrest or to reduce the consequences of a possible fall of pers ons working at different heights.
9.1.25	All applicable OC Ps (Operational control procedur es) will be f ollowed by contractor as per BH EL instructions. Th is will be done as part of normal scope of work. List of such OCPs is giv en below . In case any other OC P is found to

	be applicable during the execution of work at site, then contractor will follow this as well, within quoted rate. These OCPs (applicable ones) will be made available to contractor dur ing work execution at site. Ho wever for reference purpose, these are kept with Safety O fficer of BH EL at the Pow er Sector Regional HQ, or available in downloadable format in the website, which may be refereed by contractor, if they so desire.
	■ OCP for safe handling of chemicals
	■ OCP for Electrical safety
	■ OCP for energy conservation
	■ OCP for safe welding and gas cutting operation
	■ OCP for fire safety
	■ OCP for safety in use of hand tools
	■ OCP for first aid
	■ OCP for food safety at canteen
	■ OCP for safety in use of cranes
	■ OCP for storage and handing of gas cylinders
	■ OCP for manual arc welding
	■ OCP for safe use of helmets
	■ OCP for good house keeping
	■ OCP for working at height
	■ OCP for safe excavation
	■ OCP for safe filling of Hydrogen in cylinder
	■ OCP for illumination
	■ OCP for handling and erection of heavy metals
	■ OCP for safe acid cleaning
	■ OCP for safe alkali boil out
	■ OCP for safe oil flushing
	■ OCP for steam blowing
	■ OCP for safe working in confined area
	■ OCP for safe operation of passenger lift, material hoists & cages
	■ OCP for Vehicle maintenance
	■ OCP for safe radiography
	■ OCP for waste disposal
	■ OCP for working at night
	■ OCP for blasting
	■ OCP for DG Set
	■ OCP for handling & storage of mineral wool

	■ OCP for drilling, reaming and grinding(machining) etc.
	■ OCP for hydraulic test
	■ OCP for spray insulation
	■ OCP for trial run of rotary equipment
	■ OCP for stress relieving
	■ OCP for material preservation
	■ OCP for cable laying/tray work
	■ OCP for electrical maintenance
	■ OCP for transformer charging
	■ OCP for safe handling of battery system
	■ OCP for computer operation
	■ OCP for storage in open yard
	■ OCP for sanitary maintenance
	■ OCP for batching
	■ OCP for piling rig operation
	■ OCP for gas distribution test
	■ OCP for cleaning of hotwell / deaerator
	■ OCP for electro-resistance heating
	■ OCP for compressor operation
	■ OCP for O&M of control of AC plant & system
	■ OCP for air compressor
	■ OCP for passivation
	■ OCP for Safe EDTA Cleaning
	■ OCP for Safe Chemical cleaning of Pre boiler system
	■ OCP for Safe Boiler Light up
	■ OCP for Safe Rolling and Synchronisation
	■ OCP for Safe Loading of Unit
9.2	SAFETY AND CLEANLINESS : The contractor shall take all nec essary safety precautions and arran ge for appropriate appliances as per discretion of BHEL or its authorised officials (Site Construction Manager) to prevent loss of human liv es, injuries, to personnel engaged and damage to pro perty. Before commencing the work, the contractor shall submit a " Safety Plan" to the ab ove authorised BHEL official and obtain approval on the same. The safety plan shall indicate in detail the measures that would be taken by the contractor to ens ure safety of men, equipment, materials and environment during exec ution of the work. This will also include an organization structure, role and re sponsibilities of the c oncerned key

	personnel, the safety practi ces that will be followed, PPEs deployed, plan for handling critical activities and emergencies.
9.3	If the contractor fails to take appropr iate safety prec autions or to provide necessary safety devices and equipment or to carry out instructions issued b y the authorised BHEL official, BHEL shall have the right to take corrective steps at the risk and cost of the contractor.
9.4	During the course of cons truction, alternation or repairs, scrap with protruding nail, sharp edge etc and all other debris shall be kept clean from working areas, passage, ways and stairs in and around site.
9.5	Combustible scrap and debris s hall be removed at regular intervals during the course of execution. Safe means shall be pr ovided to facilitate such removal. The combustible scrap should be stored in safe pl ace away from the plant materials to avoid fire accidents. The ar ea shall be chosen in cons ultation with the Engineer and to be cordoned off.
9.6	Rigging equipment for materials handlin g s hall be ins pected prior to use in each shift and as necessary during its use to ensure th at it is safe. Defective rigging equipment will be removed from service.
9.7	Rigging equipment shall not be load ed in excess of its recommended saf e working load. Rigging equipment, when not in use, shall be removed from t he original work area so as not to present a hazard to employees.
9.8	Contractor shall notify the engineer, of his intention to bring on to site any equipment or any container, with liquid or gaseous fuel or other substance which may create a hazard. The Engineer shall hav e the right to pr escribe the condition under w hich such equipment or container ma y be handle d and used during the performance of th e works and the contractor shall strictly adher e to such instructions. The Engineer s hall have the right to inspec t any construction tool and to forbid i ts use, if in his opinion it is unsaf e. No claim due to such prohibition will be entertained.
9.9	Where it is necessary to pr ovide and/or store petroleum pr oducts or petroleum mixture & explosives, the contractor sha ll be responsible fo r carrying out such provision / storage in accordance with t he rules & regulations laid down in the relevant petroleum act, explosive act and petroleum and carbide of calcium manual, published by the chief inspector of explosives of India. All such storage shall have prior approval if necessary from the chief in spector of explosives or any other s tatutory authority. The contractor s hall be responsible for obtaining

	the same.
9.10	Cylinders shall be moved by tilting and rolling them on their bottom edges. They shall not be intentionally dragged, struck or permitt ed to strike each other violently.
9.11	When cylinders are transported b y powered vehicle they shall be secured in a vertical position.
9.12	All workmen of the c ontractor working on construction area shall w ear safety shoes, hand gloves, safety helmets a nd safety belt as applicable. The contractor shall provide to its work force and ensur e the use of follow ing personnel protective equipment as found necessary and as directed by BHEL.
9.12.1	Safety Helmets conforming to IS-2925 : 1984
9.12.2	Safety Belts conforming to IS-3521:1983
9.12.3	Safety Shoes conforming to IS-1989 : 1978
9.12.4	Eye and face protection devices c onforming to IS – 1179 :1967, IS 5983:1980, IS 8521 Part 1:1977, IS 8521 Part 2: 1994.
9.12.5	Hand and body protection devices conforming to IS 4770:1991 and IS- 6994 : Part 1: 1973, IS – 8619 : 1977
9.12.6	Ear protection IS-9167:1979
9.12.7	Respiratory Protective Devices as per IS-9473:2002, i4746:1999 and 14166:1994
9.13	The contractor shall insure his wo rkmen against all a ccidents and the polic y shall be presented to BHEL Engineer on demand. Other wise, BHEL will arrange the same and the ex penditure towards this will be debited to the contractor. In case of a fatal or disabling injury accident to any person at construction site due to lapses by th e contractor, the victim and/or his/her dependants shall be compens ated by t he contractor as per statutory requirements. However, if considered nec essary BHEL shall have the r ight to impose appropriate financial penalty on contractor and r ecover the same from payments due to the contractor for su itably compensating the victim and/or his/her dependence before imposing any such penalty. Appropriate enquiry shall be held by BHEL givi ng opportunity to the contr actor for pres enting his case. Above safety conditions ar e not exhaustive but give s an idea for the contractor and contr actor shall adhere to all safety precaution given by the

	Engineer at site.
9.14	The contractor shall arrange at his co st adequate lighting fa cilities e.g. flood lighting, hand lamps, area lighting etc. at various levels for safe and proper working operations during ni ght hours at the work spot as well as at the pre-assembly area.
9.15	The contractor shall be responsible fo r provision of all t he safety notices and safety equipment as enjoined on him by the application of relevant statutory regulation / provisions and/or as called upon by BHEL from time to time. He shall be held responsible for any violation of statutory regulations (local, state or central) and BHEL instruction that may endanger safety of men, equipment and material.
9.16	The contractor shall provide temporar y fencing wherever required as a safety measure against accident and damage to properties. Suitable caution notices shall be displayed w here access to any part is found to be unsafe and hazardous.
9.17	Contractor shall ensure safety of all the w orkmen, material and equipment either belonging to him or to others working at site . He shall observe safety rules and codes applied by BHEL without exception.
9.18	It will be the respons ibility of the c ontractor to ens ure safe lifting of the equipment, taking due precaution to av oid any accident and damage to other equipment and personnel. All requis ite tests and inspec tion of handling equipment, tools & tackle shall be per iodically done by the contractor by engaging only the COMPETENT PERSONS as per law. Defective equipment or uncertifiedshall be removed from s ervice. Any equipment shall not be loaded in excess of its recommended safe working load.
9.19	The contractor shall pr ovide necessary first aid fac ilities as per schedule III. In addition, ambulance facili ties, OHC and CMO as per schedule IV, V, X and XI of BOCW Rules as applicable for all his employees, representatives and workmen at site and BHEL shall have no obligation in this regard. The first aid boxes should be placed at various elevations so as to make them available within the reach and at the quickest possible time . The contractor should conduct periodical first –aid clas ses to keep his supervi sor and Engineers properly trained for attending to any emergency.
9.20	Training

9.20.1	The contractor shall arrange induction safety training for all employees before assigning work. In addition, awareness programme, mock drill at regular intervals and daily tool box meetings shall be arranged. Monthly report of the above to be given to BHEL safety Officer as per prescribed BHEL formats
9.20.2	All the contractor's supervisory personnel and sufficient number of workers shall be trained for fire protection systems. Enough number of such trained personnel must be available during the tenure of contract. Contractor should nominate his supervisor to coordinate and implement the safety measures.
9.21	Contractor shall provide enough fire protecting equipment of the types and numbers at his office, stores, temporary structure in labour colony etc. Such fire protection equipment shall be easy and kept open at all times. The fire extinguishers shall be properly refilled and kept ready which should be certified at periodic intervals. The date of changing should be marked on the Cylinders. All other fire safety measures as laid down in the " codes for fire safety at construction site" issued by safety coordinator of BHEL shall be followed. Non-compliance of the above requirement under fire protection shall in no way relieve the contractor of any of his responsibility and liabilities to fire accident occurring either to his materials or equipment or those of others. Emergency contacts nos must be displayed at prominent locations
9.22	The contractor shall at his cost, remove from vicinity of work at least once each day all combustible waste, scrap, panting materials, rubbish, unused or other materials and deposit them in places specified by BHEL to keep the work site clear and tidy. Use of undercoated canvas paper, corrugated paper, fabricated carton, plastic or other flammable materials shall be restricted to the minimum and promptly removed.
9.23	The contractor shall not use any hand lamp energized by Electric power with supply voltage of more than 24 volts in confined spaces like inside water boxes, turbine casings, condensers etc.
9.24	All portable electric tools used by the contractor shall have safe plugging system to source of power and be appropriately earthed. Only electricians licensed by appropriate statutory authority shall be employed by the contractor to carry out all types of electrical works. Details of earth resource ad their test date to be given to BHEL safety officer as per the prescribed formats of BHEL
9.25	In case of any delay in completion of a job due to mishaps attributable to lapses by the contractor, BHEL shall have the right to recover cost of such delay from

	the payments due to the contractor, after notifying the contractor suitably.
9.26	Valve protection caps shall be kept in place and secured.
9.27	The contractor shall be responsible for the safe storage and handling of his radio-active sources as per BARC rules and regulations.
9.28	Tarpaulin being inflammable should not be used (i nstead, only non infusibl e covering materials shall be used) as protective cover while preheating, welding, stress relieving etc. at site.
9.29	If the contractor fails to improve the st andards of safety in its operation to the satisfaction of BHEL after being given reasonable opportunity to do so and/or if the contractor fails to take appropria te safety precautions or to provide necessary safety devices and equipment or to carry out instruction regarding safety issued by BHEL, BHEL shall have the right to take corrective steps at the risk and cost of the contractor after giving a notice of not less than 7 days indicating the steps that would be taken by BHEL.
9.30	If the contr actor succeeds in carr ying out its job in time with out any fatal or disabling injury accident and without any damage to pr operty BHEL may, at its sole discretion, favorably consider to reward the c ontractor suitably for the performance.
9.31	The contractor shall carefully follo w the s afety requirement of BHEL/ the purchaser with the regard to voltages used in critical areas.
9.32	The contractor shall use only pr operly insulated and ar mored cables which conform to the requir ement of Indian El ectricity Act and R ules for all w iring, electrical applications at site. BH EL reserves t he right to replace any unsafe electrical installations, wiri ng, cabling etc. at the c ost of the contractor. All electrical appliances used in the work shall be in good working condition and shall be properly earthed. No maintenance work shal l be carried out on liv e equipment. The c ontractor shall main tain adequate num ber of qualifie d electricians to maintain his temporar y electrical ins tallations. Area w ise Electrical safety inspecti on is to be c arried out on monthly basis as per "Electrical Safety Inspection checklist' and the report is to be submitted to BHEL safety officer
9.33	The contractor sha ll arrange adequate number of persons specifically for clearing any debris and for house keeping of the er ection area including restacking of components in the erection areas. Housekeeping to be carried out

	as per BHEL's checklistand report is to be submitted to BHEL safety officer
9.34	In case of any damage to property due to lapses by the contractor, BHEL shall have the right to recover the cos t of su ch damages fr om the c ontractor after holding an appropriate enquiry.
9.35	The contractor shall s ubmit report of all accidents, fires and property damage etc to the Engineer immediately after such occurrence, but in any case not later then 24 hours of the occurr ence. Such reports shall be furnished in the manner prescribed by BH EL. In addition per iodic reports on safety shall also be submitted by the cont ractor to BHEL from time to time as pr escribed by the Engineer.Compiled monthly reports of all kinds of accidents, fires and property damage to be submitted to BHEL safety officer as per prescribed formats
9.36	Before commencing the w ork, the contractor shall appoint/nominate a responsible person to supervise implemen tation of all safety measures and liaison with his counterpart of BHEL.
9.37	Suitable scaffolds shall be provided for workman for all works that cannot safely be done from the ground, or from solid construction e xcept in the case of short duration of work which can be done safely from ladders. When a ladder is used, it shall be of rigid construction made of steel. The steps shall have a minimum width of 45 cm and a ma ximum rise of 30 cm. Su itable handholds of go od quality wood or steel shal l be provided and the la dder shall be given an inclination not steeper then ¼ horizontal and 1 vertical.
9.38	Scaffolding or staging more th an 3.6 m above the gr ound floor, swung or suspended from an ov erhead support or er ected with stationery support shall have a guard rail pr operly bolted, braced or otherwise secured, at least 90 c m above the floor or platform of suc h scaffolding or staging and extending along the entire length of the out side and ends thereof wi th only such openings as may be necessary for the delivery of materials. Such scaffolding or staging shall be so fastened as to prevent it for m saver, from swaying, from the building or structure.
9.39	Working platforms, gangways and stairways shall be so constructed that they do not sag unduly or unequally and if the height of the platform gangways provided is more than 3.6 m above ground level or floo r level, th ey shall b e closely boarded and shall have adequate width which shall not be less than 750 mm and be suitably fenced as described above.

9.40	Every opening in the floor or a build ing or in a working platform shall be provided with suitable means to prevent the fall of per sons or materials by providing suitable fencing or railing whose minimum height shall be 90 cm.
9.41	Wherever there are open excavation in ground, they shall be fenced off by suitable railing and danger signals installe d at night so as to prevent persons slipping into the excavations.
9.42	Safe means of access shall be prov ided to all w orking places. Every ladder shall be securely fixed. No portable single ladder shall be over 9 m in the length while the width between side rails in ru ng ladder shall in no case be less than app. 29.2 cm for ladder upto and including 3 m in length. For longer ladders this width shall be increased at least ¼" for each additional foot of length.
9.43	A sketch of the ladder s and scaffolds proposed to be used shall be prepared and approval of the Engineer obtained prior to Construction.
9.44	All personnel of the C ontactor working within the pl ant site shall be provided with safety helmets. All welders shall w ear welding goggles while doing welding work and all metal worker shall be pr ovided with safety gloves. Persons employed on metal cutting and grinding shall wear safety glasses.
9.45	Adequate precautions shall be taken to prevent danger for electrical equipment. No materials on any of the sites of work shall be so stacked or placed as to cause danger or inconvenience to any person or the public.
9.46	All trenches, four feet or more in depth, shall at all times be supplied with at least one ladder for each 30 m in length or fraction th ereof. The ladder shall b e extended from bottom of the trench to at least 90 cm above the sur face of the ground. Sides of the trenc hes which are 1.50 m or more in depth shall be stepped back to give suitable s lope or securely held by timer bracing, so as to avoid the danger of sides collapsing. The excavated materials shall not be placed within 1.5 m of the edges of the trench or half of the depth of the trench whichever is more. C utting shall be do ne from top to bo ttom. Under no circumstances undermining or undercutting shall be done.
9.47.1	The contractor shall take permission of BHEL prior to risky jobs such as working at height, hot work, liftig activities, etc through permits. No job should be started without permits.
9.47.2	The Contactor shall take all measures at the sites of the work to protect all persons from accidents and shall be bound to bear the expenses of defense of

	every suit, action or other proceedi ng at law that may be brought by any persons for injury sustained or death ow ing to neglect of t he above precautions and to pay any such persons such compensation or which may with the consent of the Contractor be paid to compromise any claim by any such person should such claim proceeding be fi led against BHEL, the Co ntractor hereby agrees to indemnify BHEL against the same.
9.48	Before any demolition wo rk is commenced and also during the process of the work the following shall be ensured:
9.48.1	All roads and op en areas adjacent to the w ork site shall either be closed or suitably protected.
9.48.2	No electric cable or apparatus which is liable to be a source of danger nor a cable or an apparatus used by the operator shall remain electrically charged.
9.48.3	All practical steps shall be taken to prevent danger to persons employed from the risks of fire or explos ion or flooding. No floor, roof or other part of the building shall be so overloaded with debr is or ma terials as to render them unsafe.
9.49	All necessary personnel safety equipment as considered adequate by the Engineer should be kept available for the us e of th e persons employed in the Site and maintained in a condition suitable for immediate use and the Contactor should take adequate steps to ensure proper use of equ ipment by thos e concerned.
9.49.1	Workers employed on mixing asphal ted materials, cem ent and lime mortars shall be provided with protective foot wear and protective goggles.
9.49.2	Those engaged in white washing and mixing or st acking of cement bags or any materials which is injurious to the ey es shall be provided with protectiv e goggles.
9.49.3	Those engaged in w elding works shall be provided with welder's protective eyesight lids.
9.49.4	Stone breakers shall be provided with protective goggles and protective clothing and seated sufficient to safe intervals.
9.49.5	Where workers are em ployed in sewers an d manholes, which are in use, the Contractor shall ensure that the manh ole covers are opene d and v entilated at least for an hour befor e the w orkers are allowed to get into manhole, and the manholes so opened shall be cordoned o ff with suitable railing and provi ded

	with warning signals or boards to prevent accident to the public.
9.49.6	The Contractor shall not employ men below the age of 18 years and w omen on the wor k of painting with products containing l ead in any form. Wherever men above the age of 18 are employed on the work of lead pai nting, the following precautions should be taken.
9.49.6.1	No paint containing lead or lead pr oducts shall be us ed except in the form of paste or ready made paint.
9.49.6.2	Suitably face masks should be supplied for use by the workers where paints are applied in the form of spray or a surface having lead pa int dry rubbed and scrapped.
9.49.6.3	Overalls shall be supplied by the Cont ractor to the work men and adequate facilities shall be provided to enable the wor king painters to wash during the cessation of work.
9.50	When the work is being done near any place where there is risk of drowning all necessary equipment s hould be provided and kept ready for us e and all necessary steps taken for prompt rescue of any person in danger and adequate provision should be made for prompt first aid treatment of all injuries likely to be sustained during the course of the work.
9.51	Motors, gearing, transmission, elec tric wiring and other dangerous parts of hoisting appliances should be provided with effi cient safe guards. Hoisting appliance should be provid ed with such means as will reduce to the minimum the risk of any part of a suspended load becoming accidentally displaced. When workers employed on electrical inst allations which are already ener gized, insulting mats, wearing ap parel, such as gloves, sl eeves and boots as may be necessary should be provided. T he worker should not w ear any rings, watches and carry keys or other materials which are good conductor of electricity.
9.52	All scaffolds, ladders and other s afety devices mentioned or described herein shall be maintained in safe condition and no s caffold, ladder or equipment shall be altered or remov ed while it is in use. Adequate w ashing facilities should be provided at or near the places of work.
9.53	The contractor shall maintain and ensure necessa ry safety measures as required for inspection and tests HV test, Pneumatic test, Hydraulic test, Spr ing test, Bend test etc as applicable, to enable inspection Agency for performing Inspection. If any test equipment is fo und not comply ing with proper safety

	requirements then the Inspection Agency may withhold inspection, till such time the desired safety requirements are met.
9.54	The Contractor shall notify BHEL of his intention to bring to site any equipment or material which may create hazard. BHEL shall have the right to prescribe the conditions under which such equipment or materials may be handled and the contractor shall adhere to such instructions. BHEL may prohibit the use of any construction machinery, which according to him is unsafe. No claim for compensation due to such prohibition will be entertained by BHEL.
9.55	All safety precautions shall be taken for welding and cutting operations as per IS-818. All safety precautions shall be taken for foundation and other excavation marks as per IS-3764.
9.56	.All gas cylinders shall be stored in upright position. Suitable trolley shall be used. There shall be flash-back arrestors conforming to IS-11006 at both cylinder and burner ends. Damaged tube and regulators must be immediately replaced. No of cylinders shall not exceed the specified quantity as per OCP
9.57	These safety provisions should be brought to the notice of all concerned by display on a notice board at a prominent, place at work spot. The persons responsible for compliance of the safety code shall be named therein by the Contractor
9.58	To ensure effective enforcement of the rules and regulations relating to safety precautions the arrangement made by the contract shall be open to inspection by the Engineer of the Engineer's Representative.
9.59	Keeping the work area clean/ free from debris, removed scaffoldings, scraps, insulation/sheeting wastage /cut pieces, temporary structures, packing woods etc. will be in the scope of the contractor. Such cleanings has to be done by contractor within quoted rate, on daily basis by an identified group. If such activity is not carried out by contractor / BHEL is not satisfied, then BHEL may get it done by other agency and actual cost alongwith BHEL overheads will be deducted from contractor's bill. Such decisions of BHEL shall be binding on the contractor.
9.60	Notwithstanding the above clauses there is nothing to exit the Contractor from the operations of any other Act or Rule in force in area of work in this respect. Provided always that all safety measures apart from those specifically provided in this agreement which are brought to the notice of the Contractor from time to time by the Engineer shall be complied by the Contractor. Provided further that

all consequences, damages, or losses ar ising by reas on of any safety code shall be met with by the Contractor.

9.61 NON COMPLIANCE:-

NONCONFORMITY OF SAFETY RULES AN D SAFETY APPLIANCES WILL BE VIEWED SERIOU SLY AND BHEL HAS RIGHT TO IMPOSE FINES ON THE CONTRACTOR AS UNDER for every instance of violation noticed:

SN	Violation of Safety Norms	Fine (in Rs)
01	Not Wearing Safety Helmet	50/- *
02.	Not wearing Safety Belt or not anchoring life line	100/-*
03	Not wearing safety shoe	100/-*
04	Not keeping gas cylinders vertically	100/-
05	Not using flash back arrestors	50/-
06	Not wearing gloves	50/- *
07.	Grinding Without Goggles	50/- *
08.	Not using 24 V Supply For Internal Work	500/-
09.	Electrical Plugs Not used for hand Machine	100/-
10.	Not Slinging property	200/-
11.	Using Damaged Sling	200/-
12.	Lifting Cylinders Without Cage	500/-
13.	Not Using Proper Welding Cable With Lot of Joints And Not Insulated Property.	200/-
14.	Not Removing Small Scrap From Platforms	200/-
15.	Gas Cutting Without Taki ng Proper Prec aution or Not Using Sheet Below Gas Cutting	200/-
16.	Not Maintaining Electric Winches Which are Operated Dangerously	500/-
17.	Improper Earthing Of Electrical T&P	500/-
18	No or improper barricading	500/-
19.	Activity carried out wi thout Safety work permit (Height work, Lifting ac tivity, Hot work-each person/case)	1000/-
20.	Accident Resulting in Partial Loss in Earning Capacity	25,000/- per victim

	21.	Fatal Accident/Accidents Resulting in total loss in Earning Capacity	1,00,000/- per victim #

Legend:-*: per head,
#: or as deducted by Customer whichever is higher

Any other non-conformity noticed not listed above will also be fined as deemed fit by BHEL. The decision of BHEL engineer is final on the above. The amount will be deducted from running bills of the contractor. The amount collected above will be utilized for giving award to the employees who could avoid accident by following safety rules. Also the amount will be spent for purchasing the safety appliances and supporting the safety activity at site.

9.61 CITATION:-If safety record of the contractor in execution of the awarded job is to the satisfaction of safety department of BHEL, is sue of an appropriate certificate to recognize the safety performance of the contractor may be considered by BHEL after completion of the job

9.62 MEMORANDUM OF UNDERSTANDING

After Award Of Work, Contractors Are Required To Enter Into A Memorandum Of Understanding As Given Below:

Memorandum of Understanding

- BHEL, Power Sector _____ Region is committed to Health, Safety and Environment Policy (EHS Policy).
- M/s _____ do hereby also commit to the same EHS Policy while executing the Contract Number _____
- M/s _____ shall ensure that safe work practices not limited to the above are followed by all construction workers and supervisors. Spirit and content therein shall be reached to all workers and supervisors for compliance.
- BHEL will be carrying out EHS audits twice a year and M/s _____ shall ensure to close any non-conformity observed/reported within fifteen days.

Signed by authorized representative of M/s ----------

	Name : Place & Date:

10.0	RA Bill Payments
10.1	The contractor shall submit his monthly RA bills with all the details required by BHEL on specified date every month covering progress of work in all respects and areas for the previous calendar month.
10.2	Mode of payment and measurement of work completed shall be as per relevant clauses of General Conditions of Contract
10.3	Release of payment in each running bill including PVC Bills wherever applicable will be restricted to 95% of the value of work admitted as per stages of progressive pro rata payments.
10.4	The 5% thus remaining shall be treated as 'Retention Amount' and shall be released as per terms specified in the General Conditions of Contract.
10.5	The payment for running bills will normally be released within 30 days of submission of running bill complete in all respects with all documents. It is the responsibility of the contractor to make his own arrangements for making timely payments towards labour wages, statutory payments, outstanding dues etc and other dues in the meanwhile. In case of Civil works, 60% of RA Bills complete and correct in all respects and certified by BHEL Engineer, shall be paid within 15 days of receipt. Balance payment shall be within 30 days.
10.6	BHEL shall release payment through Electronic Fund Transfer (EFT)/RTGS. In order to implement this system, Contractor to furnish details pertaining to his Bank Accounts where proceeds will be transferred through BHEL's banker, as per prescribed formats: Note: BHEL may also choose to release payment by other alternative modes as applicable
10.7	Paying Authority shall be the Construction Manager of the Site. Any change in the paying Authority shall be intimated to the Contactor accordingly.

11.0	Performance Monitoring
11.1	Performance of the contractor is monitored through various reports/reviews and shall be jointly evaluated every month for unit wise identified packages as per prescribed formats. Based on the net weighted scores obtained, Contractors shall be rated 'Good' or 'Satisfactory' or 'Unsatisfactory'
11.2	In case of any dispute on performance rating and the contractor refuses to sign on the performance rating given by BHEL package Incharge, the same shall be reviewed by BHEL site Incharge/Construction Manager and his decision shall be final.
11.3	Release of RA Bills will be contingent upon joint evaluation of performance
11.4	Performance of the contractor will be taken into consideration for assessing the capacity of the bidder to execute future jobs under tender, as detailed in the Notice Inviting Tender. Risk of non evaluation or non availability of the Monthly performance evaluation reports is to be borne by the Bidder.
11.5	In case of 'Unsatisfactory performance' for a continuous period of three or more months for a package or packages, BHEL has the right to get the balance works executed at the risk and cost of the contractor.
11.6	In case of 'Unsatisfactory performance' in a financial year, BHEL reserves the right to put on hold such Contractors for a period of six months for similar package or similar packages

12.0	Suspension of Business dealings
12.1	BHEL reserves the right to take action against contractors who fail to perform or indulge in malpractices, by suspending business dealings with them.
12.2	Suspension could be in the form of 'Hold', 'De-listing' or 'Banning' a contractor.
12.3	A bidder may be put on HOLD for a period of 6 months, for future tenders for specific works on the basis of one or more of the following reasons: a) Bidder does not honour his own offer or any of its conditions within the validity period. b) Bidder fails to respond against three consecutive enquires of BHEL. c) After placement of order, Bidder fails to execute a contract. d) Bidder fails to settle sundry debt account, for which he is legitimately liable, within one year of its occurrence. e) Bidder's performance rating falls below 60% in specific category (more fully described in chapter 'Performance Monitoring') f) Bidder works are under strike/ lockout for a long period.
12.4	A Bidder may be de-listed from the list of registered Bidders of the region for a period of 1 year on the basis of one or more of the following reasons:- a) Bidder tampers with tendering procedure affecting ordering process or commits any misconduct which is contrary to business ethics. b) Bidder has substituted, damaged, failed to return, short returned or unauthorizedly disposedoff materials/ documents/ drawings/ tools etc of BHEL. c) Bidder no longer has the technical staff, equipment, financial resources etc. required to execute the orders/ contracts.
12.5	A Bidder can be banned from doing any business with all Units of BHEL for a period of 3 years on the basis of one or more of the following reasons: a) Bidder is found to be responsible for submitting fake/ false/ forged documents, certificates, or information prejudicial to BHEL's interest. b) In spite of warnings, the Bidder persistently violates or circumvents the provisions of labour laws/ regulations/ rules and other statutory requirements. c) Bidder is found to be involved in cartel formation

	d) The Bidder has indulged in malpra ctices or misconduct such as bribery, corruption and fraud, pilf erage etc which are contrary to business ethics. e) The Bidder is found guilty by any court of law for criminal activity / offences involving moral turpitude in relation to business dealings. f) The Bidder is declared bankrupt, insolvent, has wound up or been dissolved; i.e ceases to exist for all practical purposes. g) Bidder is found to ha ve obtained Official Company information/ documentation by questionable means. h) Communication is received from the administrative Ministry of BHEL to ban the Bidder from business dealings.
12.6	Contracts already entered with a contractor before the date of issue of order of 'HOLD' or 'DE-LISTING' shall not be affected.
12.7	All existing contracts with a 'BA NNED' contractor shall normally be short closed
12.8	Once the order for suspension is passed, existing offer s/new offers of the contractor shall not be entertained
12.9	The above guidelines are not exhausti ve but enunc iate broad principles governing action against contractors

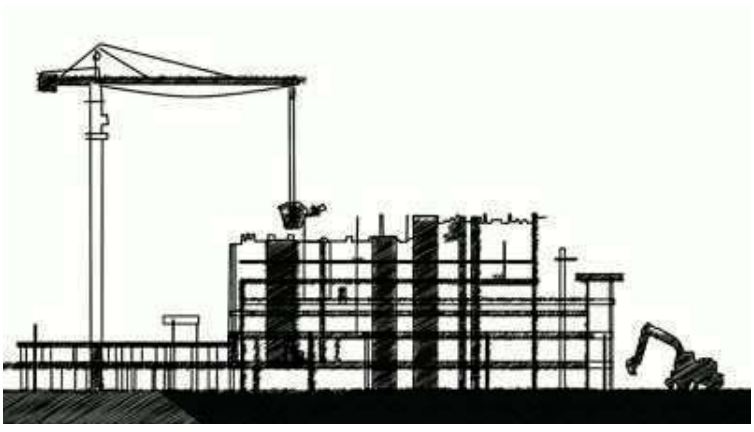

HEALTH, SAFETY and ENVIRONMENT PLAN

For

SITE OPERATIONS

By

SUB-CONTRACTORS

POWER SECTOR- EASTERN REGION

DOCUMENT ISSUE SHEET

	PREPARED BY	APPROVED BY
NAME	Saswajeet Rout	
DESIGNATION		
SIGNATURE		Pradip Ghosh Digitally signed by Pradip Ghosh DN: cn=Pradip Ghosh, o=BHEL, ou=HSE-PSER, email=pradipg@bhelpser.co.in, c=IN Date: 2019.06.15 13:02:14 +05'30'
ISSUED BY:		
ISSUED TO:		
COPY NO:		
DATE OF ISSUE:		

THIS PLAN SUPERSEDES THE STANDARD HSE PLAN

HSE PLAN FOR SITE OPRATIONS BY BHEL'S SUBCONTRACTORS AT A GLANCE

BEFORE START

SIGNING OF MOU	
Agree to comply to HSE requirement- Statutory and BHEL's	Agree to accept BHEL's decision on release of 1.5% (as specified in the contract) of Gross bill Amount or part thereof or otherwise (non-release), based on our HSE performance as evaluated by BHEL during the execution period

PLAN

HSE ORGANISATION	
Manpower • **1 (one) safety officer for every 300 workers or part thereof** • **1(one) safety-supervisor for every 150 workers** • **1(one) safety-steward/ supervisor for every 50 workers** As per Cl. 7.1	**HSE Roles and responsibilities** • All employees as per 7.2.1 • Site In-charge & Package In-charges- As per clause 7.2.2 • Safety officer- As per clause 7.2.3

HSE Planning
for Man, Machinery / Equipment/ Tools & Tackles

PROVIDE

HSE INFRASTUCTURE	
• PPEs • Drinking Water • Washing Facilities • Latrines and Urinals • Provision of shelter for rest • Medical facilities	• Canteen facilities • Labor Colony • Emergency Vehicle • Pest Control • Scrapyard • Illumination • Crèches (if required)

TRAIN

HSE TRAINING , AWARENESS & PROMOTION	
Training • Induction training • Height work and other critical areas • Tool Box talk & Pep Talk • Job Specific Training	**Awareness & Promotion** • Posters & Signage • Emergency Contact/Information Display • Banner • Competition & Awards

COMMUNICATE

HSE COMMUNICATION	
Incident Reporting • Accident- Fatal, Major & Minor • Property damage • Near Miss **Safety Performance Reporting**	**Event Reporting** • Celebrations • Training • Medical camp • Motivational Activities

EXECUTE SAFELY

SAFETY DURING WORK EXECUTION

PERMIT TO WORK

Height work (above 2 meters), Hot Work, Heavy Lifting, Confined Space, Radiography, Excavation (More than 1.22 meters), Lockout / Tag out

OPERATIONAL CONTROL

- Welding, Gas Cutting Grinding
- Rigging, Signaling
- Cylinder- Storage & Movement
- Demolition work
- T&Ps
- Chemical Handling
- Electrical works
- Painting
- Fire
- Scaffolding
- Height work
- Working Platform
- Excavation / Civil Work
- Ladder
- Lifting
- Hoisting appliance
- Hard Barricading

HOUSE KEEPING

WASTE MANGEMENT

TRAFFIC MANAGEMENT

ENVIRONMENTAL CONTROL

EMERGENCY PREPAREDNESS AND RESPONSE PLANNING

CHECKS

HSE AUDITS & INSPECTION

- Daily Checks
- Inspection of Height work
- Inspection of PPEs
- Inspection of T & Ps
- Inspection of Cranes & Winches
- Inspection of Welding and Gas cutting
- Inspection of elevators etc.

HSE PERFORMANCE EVALUATION PARAMETERS

NON CONFORMANCE

PENALTY for NON CONFORMANCE
Refer Clause 16 Incremental penalty

For repeated violation by the same person, the penalty would be double of the previous penalty

For repeated fatal incident in the same contract / package, incremental penalty to be imposed. The subcontractor will pay 2 times the penalty compared to the previously paid in case there are repeated cases of fatal incidents under the same subcontractor for the same package in the same unit.

COMPENSATION TO ACCIDENT VICTIMS
Refer Clause 17
Employee Compensation Act, 1922
Other Acts and Guidelines relevant to employee compensation

ORGANIZATION OF THIS DOCUMENT

- ***GENERAL SECTION***

- ***SECTION A:***

  MAIN REQUIREMENTS APPLICABLE IN FULL

- ***SECTION B:***

  SPECIAL REQUIREMENTS

- ***ANNEXES***

CONTENTS

S. No.	Description	Page No.
	GENERAL	
1	PURPOSE	9
2	SCOPE	9
3	OBJECTIVES AND TARGETS	10
4	REFERENCES	11
5	HEALTH, SAFETY & ENVIRONMENT POLICY	12
	MEMORANDUM OF UNDERSTANDING	**13**
6	TERMS & DEFINITIONS	14
	SECTION-A	
7	HSE ORGANIZATION	17
7.1	DEPLOYMENT (NUMBERS, QUALIFICATIONS & EXPERIENCE)	17
7.2	HSE RESPONSIBILITIES	19
8	PLANNING BY SUBCONTRACTOR	23
8.1	MOBILISATIONOF MACHINERY/EQUIPMENT/TOOLS	23
8.2	MOBILISATION OF MANPOWER BY SUBCONTRACTOR	24
8.3	PROVISION OF PPEs	25
8.4	ARRANGEMENT OF INFRASTRUCTURE	26
9	HSE TRAINING & AWARENESS	32
10	HSE PROMOTION – SIGNAGE,POSTERS, COMPETITIONS, AWARDS ETC	34
11	HSE COMMUNICATION & PARTICIPATION	35
12	INCIDENT INVESTIGATION & CORRECTIVE ACTION	36
13	SAFETY DURING WORK EXECUTION	37
13.1	HSE SYSTEMS & PROCEDURES	37
13.2	WORK PERMIT SYSTEM	39
13.3	ACTIVITY SPECIFIC SAFETY REQUIREMENTS	40
13.4	ENVIRONMENTAL CONTROL	46
13.5	HOUSEKEEPING	47

S. No.	Description	Page No.
13.6	WASTE MANAGEMENT	47
13.7	TRAFFIC MANAGEMENT	48
13.8	EMERGENCY PREPAREDNESS & RESPONSE	50
13.9	CONTROL OF DOCUMENTS	50
13.10	CONTROL OF RECORDS	50
14	HSE INSPECTION	51
15	HSE PERFORMANCE	54
16	HSE PENALTIES FOR NON-COMPLIANCE	55
17	OTHER REQUIREMENTS	56
18	INTERNAL & EXTERNAL HSE AUDITS	56
19	HSE REVIEW	57
20	FORMATS USE	58
	FORMATS	
	SECTION B	
	ESTABLISHMENT OF COMMON FACILITIES / INFRASTRUCTURE	
	SHARED FACILITIES	
	ANNEXES	
	ANNEXURE-1	
	ANNEXURE-2	
	ANNEXURE-3	
	ANNEXURE-A: ACTIVITY SPECIFIC REQUIREMENTS FOR SAFETY	
	ANNEXURE-B: HSE PRECAUTIONS FOR ADVERSE CLIMATES & WEATHER CONDITIONS	
	ANNEXURE-C: FIRE EXTINGUISHER REQUIREMENTS	
	ANNEXURE-D: SPECIFICATIONS	
	RECORD OF REVISIONS	

GENERAL

1. PURPOSE

1.0 The purpose of this HSE Plan is to provide for the systematic identification, evaluation, prevention and control of general workplace hazards, specific job hazards, potential hazards and environmental impacts that may arise from foreseeable conditions during installation and servicing of industrial projects and power plants.

1.1 This document shall be followed by BHEL's Sub-Contractors at all installation and servicing sites. In case BHEL has contractual HSE obligations towards customer, this document will be followed in conjunction with (BHEL's) customer specific requirements, ensuring that applicable systems, controls and checks of both are implemented in letter and spirit.

1.2 In case the customer has any specific requirement, the same is to be fulfilled but may not include financial inclusion.

1.3 This document shall be followed unless otherwise mentioned in TCC (technical condition of contract) or elsewhere in NIT or contract documents. This supersedes all HSE clauses in GCC.

1.4 Although every effort has been made to make the procedures and guidelines in line with statutory requirements, in case of any discrepancy relevant statutory guidelines must be followed.

2. SCOPE

The document is applicable on all activities and assets including managerial, supervisory, professional, technical, clerical and other workers including contract laborers; and equipment operating under the control of BHEL's Subcontractors at all installation / servicing activities of BHEL Power Sector as per the relevant contractual obligations.

3. OBJECTIVES

The HSE Plan reflects that BHEL places high priority upon the Occupational Health, Safety and Environment at workplaces. The Sub-contractor shall:

Health & Safety

- Prevent injury and ill health of all persons at site ('Persons' refers to all personnel including managerial, supervisory, professional, technical, clerical and other workers including contract laborers)

Environment

- Prevent pollution to environment and ensure protection of environment taking into account interested party concern and conservation of resources and reduction of wastage

Legal Requirements

- Comply at all times with the relevant statutory and contractual HSE requirements.

Planning & Resources

- Ensure that all work planning takes into account all persons that may be affected by the work.
- Ensure timely provision of resources to facilitate effective implementation of HSE requirements.

Competency, Training & Awareness

- Provide trained, experienced and competent personnel. Ensure medically fit personnel only are engaged at work.
- Provide all personnel with adequate information, instruction, training and supervision on the safety aspect of their work.

Maintenance of Equipment

- Ensure fitness testing of all T&Ps. Lifting appliances like cranes, chain pulley blocks etc. are certified by competent authority.

Safety during Operations

- Provide and maintain plant, places and systems of work that are safe and without risk to health and the environment.
- Effectively control, co-ordinate and monitor the activities of all personnel on the Project sites including subcontractors in respects of HSE.
- Establish effective communication on HSE matters with all relevant parties involved in the Project works.

HSE Improvement

- Capture the data of all incidents including near misses, process deviation etc. Investigate and analyze the same to find out the root cause
- Ensure timely implementation of correction, corrective action.
- Ensure continual improvement in HSE performance

GOALS AND TARGETS

- **To achieve "Zero Incident at Site" (LTI)**
- **100% compliance of all legal/statutory requirements related to HSE.**
- **100% Health, Safety and Environmental Induction training attendance for all workers.**
- **100% High Risk activities to be carried out only after approved Method Statement, HIRA / Aspect-Impact / JSA / OCP and Permit to Work are implemented.**
- **100% PPEs compliance in high and medium risk activities.**
- **100% monitoring of all Work Areas**
- **100% detection of non-conformities in work area and 100% closure within specified time**
- **100% incident (near miss, minor, major, other) reporting, recording and reviewing for corrective actions.**
- **Regular Safety Reviews to assess HSE program compliance and 100% closure of any recognized gaps to continually improve safety management and incident prevention.**

4. REFERENCES

1. ALL CONTRACTUAL HSE REQUIREMENTS INCLUDING THIS DOCUMENT
2. ALL APPLICABLE ACTS, RULES & REGULATIONS
3. BHEL POWER SECTOR HSE MANAGEMENT SYSTEM
   - I. HSE PROCEDURES (13.1.1)
   - II. WORK PERMITS (See Clause 13.1.2)
   - III. OPERATIONAL CONTROL PROCEDURES (See Clause 13.1.3)
   - IV. FORMATS (See Clause 21)
4. BHEL CORPORATE STANDARD PPE GUIDELINES
5. RELEVANT INDIAN STANDARDS FOR SAFETY (See Annexure 02)

(Note: Wherever, the date or revision number of a document is not mentioned, latest revision is implied)

5. BHEL HEALTH, SAFETY & ENVIRONMENT POLICY:

In BHEL, Health, Safety and Environment (HSE) responsibilities are driven by our commitment to protect our employees and people we work with, community and environment. BHEL believes in zero tolerance for unsafe work/non-conformance to safety and in minimizing environmental footprint associated with all its business activities. We commit to continually improve our HSE performance by:

- Developing safety and sustainability culture through active leadership and by ensuring availability of required resources.
- Ensuring compliance with applicable legislation, regulations and BHEL systems.
- Taking up activities for conservation of resources and adopting sound waste management by following Reduce/Recycle/Reuse approach.
- Continually identifying, assessing and managing environmental impacts and Occupational Health & Safety risks of all activities, products and services adopting approach based on elimination/ substitution/reduction/control.
- Incorporating appropriate Occupational Health, Safety and Environment criteria into business decisions, design of products & systems and for selection of plants, technologies and services.
- Imparting appropriate structured training to all persons at workplace and promoting awareness amongst customers, contractors and suppliers on HSE issues.
- Reviewing periodically this policy and HSE Management Systems to ensure its relevance, appropriateness and effectiveness.
- Communicating this policy within BHEL and making it available to interested parties.

Atul Sobti
Chairman & Managing Director

6. TERMS AND DEFINITIONS

6.0 INCIDENT

Work- related or natural event(s) in which an injury or ill health (regardless of severity) or fatality, damage to property/environment occurred, or could have occurred.

6.1 NEAR MISS

An incident where no ill health, injury, damage or other loss occurs, but it had a potential to cause, is referred to as “Near-Miss incident”.

6.2 MAN-HOURS WORKED

The total number of employee hours worked by all employees including subcontractors working in the premises.
It includes managerial, supervisory, professional, technical, clerical and other workers including contract laborers.
Man-hours worked shall be calculated from the payroll or time clock recorded including overtime. When this is not feasible, the same shall be estimated by multiplying the total man-days worked for the period covered by the number of hours worked per day. The total number of workday for a period is the sum of the number of men at work on each day of period. If the daily hours vary from department to department separate estimate shall be made for each department and the result added together.

6.3 FIRST AID CASES (FAC)

First aid cases include:

1. Visit to a physician or a licensed health care professional solely for observation or counselling
2. Conduct of diagnostic procedures like X rays, blood test including the prescription medications used solely for diagnostic purposes (e.g. eye drops to dilate eyes)
3. Using a non-prescription medicine at non-prescription strength (for medication available in both prescription and non-prescription form as recommendation by a physician or other licensed health care professional to use a non-prescription medication at prescription strength is considered medical treatment for record keeping purposes};
4. Administering tetanus immunizations (other immunizations, such as Hepatitis B vaccine or rabies vaccine, are considered medical treatment);
5. Cleaning, flushing or soaking wounds on the surface of the skin;
6. Using wound coverings such as bandages, Band-Aids TM, gauze pads, etc.; or using butterfly bandages or Steri-Strips TM (other wound closing devices such as sutures, staples, etc., are considered medical treatment);
7. Using hot or cold therapy;
8. Using any non-rigid means of support, such as elastic bandages, wraps, non-rigid back belts, etc. (devices with rigid stays or other systems designed to immobilize parts of the body are considered medical treatment for record-keeping purposes);

9. Using temporary immobilization devices while transporting an accident victim (e.g., splints, slings, neck collars, back boards, etc.).
10. Drilling of a fingernail or toenail to relieve pressure, or draining fluid from a blister;
11. Using eye patches;
12. Removing foreign bodies from the eye using only irrigation or a cotton swab;
13. Removing splinters or foreign material from areas other than the eye by irrigation, tweezers, cotton swabs or other simple means;
14. Using finger guards;
15. Using massages (physical therapy or chiropractic treatment are considered medical treatment for recordkeeping purposes); or
16. Drinking fluids for relief of heat stress.

No other treatments are considered first aid.

6.4 MEDICAL TREATMENT CASES (MTC)

An incident involved with an injury or illness that needs medical attention beyond First-aid as per 6.3 above.

6.5 **Dangerous Occurrence** is defined as:
(1) Collapse or failure of lifting appliances or hoist or conveyors or other similar equipment/machine;
(2) Collapse or failure of a crane, derrick, winch, hoist or other appliance used in raising or lowering persons or goods or any part thereof, or the overturning of a crane;
(3) Explosion or fire causing damage to the structure of any room or place in which persons are employed, or to any machine or plant, resulting in the complete suspension of ordinary work;
(4) Electrical short circuit or failure of electrical machinery, plant or apparatus, attended by explosion or fire, causing structural damage involving its stoppage or disuse;
(5) Explosion of a receiver or container used for the storage at a pressure greater than atmospheric pressure of any gas or gases (including air) or any liquid or solid resulting from the compression of gas;
(6) Collapse in whole or part from any cause whatsoever of any roof, wall, floor, Structure or foundation forming part of the construction site in which persons are employed;
(7) Total or partial collapse of any overburden, face, tip or embankment on the Construction site;
(8) The overturning of, or collision with any object by any bulldozer, dumper, excavator, grader, lorry or shovel loader, or any mobile machine used for the handling of any substance on the construction site.

6.6 **Fire**: Except Dangerous occurrence, any incident involving fire.
6.7 **Property Damage**: Except Dangerous Occurrences and Fire, any incident of property (materials, building, equipment etc) getting damaged.

6.8 TYPE OF INCIDENT / ACCIDENT & THEIR REPORTING:

The categories of Incident / accident are as follows:

Non-Reportable Cases or NON-LTI: (Including First-aid cases as per 6.3 and MTC as per 6.4)
Minor: In this case the injured person resumes duty within 48 hours of incident.

Reportable Cases (LTI or Loss Time Injury Cases):

Major: In this case the injured person is disable for 48 hours or more and is not able to perform his duty. (as per IS 3786). It includes fatality.

All incidents must be reported orally immediately and in writing within 24 hours of time of incident. However, in case of fatality, it shall be reported to the statutory authority within prescribed timeline through proper channel. Internal reporting shall be done within 6 hours of time of the incident

6.9 TOTAL REPORTABLE FREQUENCY RATE

Frequency rate is the number of Reportable Lost Time Injury (LTI) per one Million Man hours worked. Mathematically, the formula read as:

$$\frac{\text{Number of Reportable LTI}}{\text{Total Man Hours Worked}} \times 1{,}000{,}000$$

6.10 SEVERITY RATE

Severity rate is the Number of days lost due to Lost Time Injury (LTI) per one Million Man hours worked. Mathematically, the formula reads as:

$$\frac{\text{Days lost due to LTI}}{\text{Total Man Hours Worked}} \times 1{,}000{,}000$$

6.11 FREQUENCY SEVERITY INDEX (FSI)

Frequency Severity Index, $FSI = \sqrt{FR * SR / 1000}$

6.12 INCIDENCE RATE

Incidence Rate is the Number of LTI per one thousand manpower deployed. Mathematically, the formula reads as:

$$\frac{\text{Number of LTI} \times 1000}{\text{Average number of manpower deployed}}$$

6.13 JOB SAFETY ANALYSIS

A job safety analysis (JSA) is a procedure which helps integrate accepted safety and health principles and practices into a particular task or job operation. In a JSA, each basic step of the job is to identify potential hazards and to recommend the safest way to do the job. Other terms used to describe this procedure are job hazard analysis (JHA) and job hazard breakdown.

6.14 SAFETY WALK

It's a walk (conducted periodically) by an official through a portion or whole of a site as an HSE officer, noting down HSE observations, speaking to concerned workmen and supervisor on observation, recording and reporting to in charges of agencies, getting the same rectified with personal follow up - to send out a strong message on Management's commitment to safety.

6.15 HEAVY & COMPLEX LIFTING

A heavy and complex lifting activity includes:

1. Lifting above 50 Tons
2. Tandem Lifting using multiple cranes
3. Total load exceeding 75% of capacity of crane
4. Lift of unusual difficulty or geometry or rigging
5. Lift over operating units
6. Any other lift as decided by site HSE / Erection

In any case, Job Safety Analysis to be carried out for any lift above 5 Tons.

6.16 SAFETY COMMITTEE

As per the BOCW, Safety Committee shall be constituted if there are more than five hundred or more construction workers are employed at any site. As per the Factories Act, 1948 it is for 250 workers. It shall be represented by equal number of representatives of employer and construction workers.

6.17 NIGHT WORK

Work conducted after sunset when only a fraction of total manpower is available

Section-A

Main Requirements

(Applicable in Full)

7. HSE ORGANISATION

7.1 DEPLOYMENT

7.1.1 Minimum Number (Availability per contract / package per Working Shift)

7.1.1.1 HSE Officer	7.1.1.2 HSE Supervisor	7.1.1.3 HSE Steward / Observer
1 per 300 workers or part thereof as a minimum or as mandated by applicable legal requirements, whichever more stringent	1 per 150 workers or part thereof	1 per 50 workers or part thereof

7.1.1.4 The safety officers shall be engaged directly by the sub-contractor, whereas safety supervisors and safety stewards may be from the agencies engaged by the sub-contractor.

7.1.1.5 Deployment Plan:

7.1.1.5.1 These shall be minimum one HSE officer along with HSE supervisor and HSE steward in the aforesaid ratio for every shift for each unit of Boiler/ESP/Power House & TG/ Chimney/ Whole of Cooling Tower.

7.1.1.5.2 For Civil works and other BOP items, deployment shall be broadly as specified in the above table. But BHEL shall finally approve the deployment based on nature and volume of jobs, Risks and hazards associated etc.

7.1.1.5.3 The deployment plan of Safety manpower at various locations shall be submitted to BHEL for approval by subcontractor

BHEL reserves the right to demand more safety personnel than what is stipulated here and change the deployment pattern

7.1.2 QUALIFICATION & EXPERIENCE

All Degrees/ Diplomas shall be recognized by State Council for Technical Education & Vocational Training (SCTE & VT) / All India Council for Technical Education (AICTE) / University

7.1.2.1 HSE Officer	7.1.2.2 HSE Supervisor	7.1.2.3 HSE Steward / Observer
A. i. Recognized degree in any branch of Engg. or Tech. or Architecture with practical experience of working in a building or other construction work in supervisory capacity for a period of not less than two years, or Recognized diploma in any branch of Engg. or Tech with practical experience of working in a building or other construction work in supervisory capacity for a period of not less than five years. ii. Recognized degree or diploma in Industrial safety ii. (Preferably) have adequate knowledge of the language spoken by majority of the workers at the construction site. **Alternatively:** **B.** Graduation Degree in Science with Physics & Chemistry and degree or diploma in Industrial Safety (from any Indian institutes recognized by AICTE or State Council of Tech. Education of any Indian State) with practical experience of working in a building, plant or other construction works (as Safety Officer, in line with Indian Factories Act, 1958) for a period of not less than five years.	As a minimum, (s)he shall possess: A recognized graduation Degree in Science (with Physics & Chemistry) or a recognized diploma in Engg. or Tech. with: a. Minimum Two years of practical experience in construction work environment and b. Should possess requisite skills to deal with construction safety & fire related day-to-day issues.	As a minimum, (s)he shall possess: 1. Class XII pass certificate and 2. Trained in fire-fighting as well as in safety / occupational health related subjects, with: a. Minimum two year of practical experience in construction work environment and b. Should have adequate knowledge of the local language spoken by majority of the workers at the construction site.

7.1.3 HSE IN-CHARGE

In case there are more than one HSE Officers with any subcontractor, one of them, who is senior most by experience (in HSE discipline), may be designated a s HSE In-Charge. Duties & responsibilities of such person shall be commensurate with that of relevant statute and primarily to coordinate with top management of Client and subcontractors.

7.1.4 AVAILABILITY AND PENALTY FOR NON-DEPLOYMENT:

Subcontractor shall ensure physical availability of safety personnel at the place of specific work location including where Height Work Permit is required/granted. No work shall be started in any area until above safety personnel & concerned Site Engineer of subcontractor are physically deployed at site.
The Subcontractor shall prepare an organization chart identifying the areas of operations, responsibilities and reporting structure of all safety personnel and submit the same to BHEL.

The subcontractor shall deploy sufficient safety officers, supervisors and safety-stewards, as per numbers & qualifications mandated in this Section since mobilization of first batch of manpower and add more in proportion to the added strength in work force. Any delay in deployment will attract a penalty at following rates:

Non-deployment of HSE Officer	–	**Rs 50000 per man-month**
Non-deployment of HSE Supervisor	–	**Rs 30000 per man-month**
Non-deployment of HSE Steward	–	**Rs 20000 per man-month**

Penalty shall be collected for the period of non-availability of safety personnel after allowing a grace period of 15 days for finding a replacement.

7.1.5 QUALIFICATION OF CRANE & WINCH OPERATORS, DRIVERS etc.:

The Crane and Winch Operators, Drivers, Riggers and other professionals deployed shall be qualified and experienced, and have valid license for the class of vehicle / machinery as applicable. The sub-contractor shall certify competence of these persons.in writing as and when they join.
Crane/Winch operator should have certificate on subject course or owner experience certificate in letterhead.

7.1.6 In case the statutory requirements i.e. State or Central Acts and / or Rules as applicable like the Building and Other Construction Workers' Regulation of Employment and Conditions of Service- Act,1996 or State Rules (wherever notified), the Factories Act, 1948 or Rules (wherever notified), etc. are more stringent than above clarifications, the same shall be followed.

7.1.7 **BILLING:** Deployment of Safety manpower as per this clause **shall be** a billable item.

7.1.8 The Subcontractor shall verify & authenticate credentials of the HSE personnel detailed in this Section and furnish Bio-Data/Resume / Curriculum Vitae of the safety personnel as above for BHEL / Owner's approval, at least 1 month before the mobilization. The Subcontractor, whenever required, shall arrange submission of original testimonials / certificates of their Safety personnel, to BHEL / Owner (for verification/scrutiny, etc.)

7.1.9 Prior approval of CVs by BHEL for Safety Officer and Safety Supervisor is mandatory, however BHEL has right to check suitability of Safety Stewards as well.

7.2 HSE RESPONSIBILITIES

The subcontractors shall communicate the HSE responsibilities as indicated in this section to relevant employees in written Form and ensure awareness of the same

7.2.1 ALL EMPLOYEES

1. To be aware of, get involved in and ensure implementation of all HSE related Systems and Procedures including but not limited to:

    a) BHEL HSE Management System including HSE Procedures and OCPs
    b) Work Permit System
    c) Emergency Preparedness Response Plans
    d) Contractual HSE requirements
    e) Legal Requirements
    f) Penalty System
    g) Training requirements
2. To ensure that the persons engaged in respective area follow the safety rules like using appropriate PPEs.
3. To keep track of repetitive minor or major incident observation/ report and submit to BHEL.
4. To prepare HIRA / JSA as required and submit to BHEL for verification.
5. To record all incidents including near miss and report to BHEL.
6. To adopt safe working practices at all times and act as role model for Safety
7. To take immediate corrective action actions in case any non-conformity is observed on product / process / system with respect to Occupational Health, Safety and Environment.
8. In case any particular activity / work has extremely high consequential risk or high environmental impact, same shall be brought to the notice of BHEL Package In-charge before starting the work.
9. To interfere/ stop work as & when identified unsafe.
10. To maintain & promote improved level of house-keeping all the time at site.
11. To support/co-operate with audit team members as & when safety audits are carried out.
12. To involve in investigation, if any incident occurs in his work area.
13. To participate in safety promotional programmes.
14. To attend the safety committee meeting, if member/ invitee
15. To ensure that only fit T&Ps and qualified persons are engaged for all activities.
16. Shall ensure that person working above 2.0 meter should use Safety Harness tied to a life line/stable structure.
17. Shall ensure that materials are not thrown from height. Cautions to be exercised to

prevent fall of material from height.

18. Shall ensure that all T&Ps engaged are tested for fitness and have valid certificates from competent authorities.

7.2.2 SITE IN –CHARGE & PACKAGE IN-CHARGES OF SUBCONTRACTOR

1. All requirements as per 7.2.1
2. **Shall ensure fulfillment of HSE requirements of BHEL contract as given in this document.**
3. Shall engage qualified safety manpower as per this document at all times.
4. Shall adhere to the rules and regulations mentioned in this document, practice very strictly in his area of work in consultation with his concerned engineer and the safety coordinator.
5. Shall screen all workmen for health and competence requirement before engaging for the job and periodically thereafter as required.
6. Shall ensure that all the workers are engaged after undergoing induction training.
7. Shall arrange for all necessary PPEs like safety helmets, belts, full body harness, shoes, face shield, hand gloves etc. before starting the job. Shall ensure that no working men /women carry excessive weight more than stipulated in Factory Rule Regulation R57.
8. Shall ensure that provisions stipulated in contract Labor Regulation Act 1970, Chapter V C.9, canteen, rest rooms/washing facilities to contracted employees at site.
9. Shall report all incidents (Fatal/Major/Minor/Near Miss) to the Site engineer /HSE officer of BHEL.
10. Shall conduct Safety Walks and safety inspections, and act as a role model for Safety.
11. Shall ensure that Horseplay is strictly forbidden.
12. Shall ensure that adequate illumination is arranged during night work.
13. Shall ensure that all personnel working under subcontractor are working safely and do not create any Hazard to self and to others.
14. Shall ensure display of adequate signage/posters on HSE.
15. Shall ensure that mobile phone is not used by workers while working.
16. Shall ensure conductance of HSE audit, mock drill, medical camps, induction training and training on HSE at site.
17. Shall ensure full co-operation during Client/External /Customer HSE audits.
18. Shall ensure submission of look-ahead plan for procurement of HSE equipment’s and PPEs as per work schedule.
19. Shall ensure adequate valid fire extinguishers are provided at the work site.
20. Shall ensure availability of sufficient number of toilets /restrooms and adequate drinking water at work site and labor colony.
21. Shall ensure adequate emergency preparedness
22. Site In-charge also involve in the induction training so as to share knowledge of some incident and guide the worker to perform work safely.
23. Shall ensure power source for hand lamps shall be maximum of 24 v.
24. Shall ensure temporary fencing should be done for open edges if Hand – railings and Toe-

guards are not available.

25. Shall be responsible for the periodic testing of T&Ps (winches / crane /hydra/tools/equipment so on.) and Pressure Vessels as per applicable codes and submit report to BHEL
26. Shall be member of site HSE committee and attend all meetings of the committee

7.2.3 HSE OFFICER OF SUBCONTRACTOR

1. All requirements as per 7.2.1
2. Carry out safety inspection of Work Area, Work Method, Men, Machine & Material, P&M and other tools and tackles.
3. Facilitate HIRA and Aspect/Impact Study in the area and ensure control measures.
4. Highlight the requirements of safety through Tool-box / other meetings.
5. Help concerned HOS to prepare Job Specific instructions for critical jobs.
6. Maintain record and conduct investigation of all incident/dangerous occurrences & recommend appropriate safety measures.
7. Advice & co-ordinate for implementation of HSE permit systems, OCPs & MPs.
8. Convene HSE meeting & minute the proceeding for circulation & follow-up action.
9. Plan procurement of PPE & Safety devices and inspect their healthiness.
10. Report to BHEL on all matters pertaining to status of safety and promotional programmes at site level.
11. Encourage raising Near Miss Report on safety along with, improvement initiatives on safety.
12. Facilitate administration of First Aid
13. Facilitate screening of workmen and safety induction.
14. Conduct fire Drill and facilitate emergency preparedness
15. Design campaigns, competitions & other special programs to promote safety in the workplace.
16. Notify non-conformance to safety norms observed during site visits / site inspections.
17. Recommend to Site In-charge, immediate discontinuance of work until rectification, of such situations warranting immediate action in view of imminent danger to life or property or environment.
18. To decline acceptance of such PPE / safety equipment that do not conform to specified requirements.

7.2.4 HSE SUPERVISOR OF SUBCONTRACTOR

1. All requirements as per 7.2.1
2. To assist Safety officer

7.2.5 HSE STEWARD / OBSERVER OF SUBCONTRACTOR

1. All requirements as per 7.2.1
2. To monitor allotted area for Safety violations, take required action and inform the concerned Safety Supervisor / Officer

3. To assist Safety Officer and Safety Supervisor

7.2.6 HSE DOCUMENTS, SYSTEMS & PROCEDURES:

BHEL shall provide the subcontractor soft copies of all applicable HSE Procedures, Work Permits, Operational Control Procedures, Formats and any other instructions required for the implementation of HSE Management System before commencing operations at site. Subcontractor shall ensure the availability of the same.

7.2.7 IMPORTANT SITE EHS RULES RESULTING IN POSSIBLE EXPULSION FROM SITE

- Pre-employment Medical fitness is compulsory for all workers.
- EHS induction in mandatory for all new workers, supervisor and engineers, subcontractor managers etc.
- No visitors are allowed for site visit without safety induction.
- **Mandatory PPEs are**

  - ✓ *Safety helmet,*
  - ✓ *Hard toe safety shoes,*
  - ✓ *Safety glasses*
  - ✓ *Reflective vest*
  - ✓ *Full/half sleeve (at least 4-inch-long) shirt*
  - ✓ *Full length pant/trousers for male and preferably Salwar Kameez for female*

- **Zero Tolerance Safety Rules**

  - Violation of Fall protection / not anchoring & wearing safety harness above 6 feet,
  - Work without PTW
  - Child labor at site

- Restricted Use of cell phone in the working zone, operating vehicle/crane and at height. Encourage the people not to bring mobile phones inside the project premises.
- All vehicle being used at site to be in good condition in all respect.
- All electrical installations should have individual 30 mA ELCBs
- **Fighting**: Fighting anywhere on the Project site, including in parking areas, is strictly forbidden; violators will be barred from site and possibly subjected to legal action by local authorities.
- **Horseplay**: Running, pushing, practical jokes, and other horseplay are forbidden on the project site, including in parking areas.
- **Gambling**: Gambling on the Project site is not permitted
- **Alcohol & Drugs**: Intoxication or possession of alcohol or illegal drugs is strictly forbidden.
- **Weapons**: Possession of weapons on the Project site is strictly prohibited
- **Asbestos Material**: No asbestos material is allowed to use in Project Site
- **Hair**: Anyone working on site property with scalp hair longer than the top of his/her shoulders must tie-up and restrains the hair within the hard hat or coveralls, shirt or jacket collar.
- **Jewelry**: Loose necklaces, dangling earrings and bracelets shall not be worn when working on the Project site.

- **Contact Lens**: While the site does not prohibit the wearing of contact lens, BHEL Project does not recommend their use.

- **Use of Empty Drums**: Use of empty drums to climb up and work is banned. Proper stool/ ladder/ stage required to be used if intended to work at height.
- Projects must comply in full with all applicable EHS local and national legislation. In circumstances where there is a conflict between local or national legislation and client requirements, the higher (more protective) requirement must prevail.
- All persons working on suspended scaffolds/cradles/gondolas must wear and use appropriate fall prevention equipment so as to protect them effectively at all times when they are at risk from any failure of any part of the scaffold/cradle/gondola, including its suspension system

- **Construction Trucks/Vehicles**

  - ✓ Vehicles must be equipped with proper seat belts for driver and passengers. All persons riding in vehicles must be advised of the requirement that seat belts are to be used whenever the vehicles are being operated.
  - ✓ The subcontractor is responsible for assuring the overall safe condition of vehicles assigned to its projects.
  - ✓ The speed limit on the project site is a maximum of 20 Km/hr.
  - ✓ Any person found operating or driving in a reckless or careless manner without regard for the safety of other employees or the general public will be immediately removed for the equipment they were operating and permanently prohibited from operating or driving any equipment on the project.
  - ✓ Any mobile equipment found to be unsafe or defective must be immediately removed from service and sent for repair or replacement. The subcontractor must ensure that the proper repairs have been made prior to putting the equipment back into service.

- **Construction Material Handling Heavy Equipment**

  - ✓ No equipment may be modified without equipment manufacturer's authorization.
  - ✓ Rollover Protective Structures must be provided for all equipment as required.
  - ✓ Seat belts must be provided and used by operators of all equipment that has a Rollover Protective Structure.
  - ✓ All bi-directional equipment must be equipped with an operable horn that must be used as needed when the machinery is moving in either direction.
  - ✓ All bi-directional equipment must also have an operable alarm in addition to the horn.
  - ✓ All equipment must be provided with a multi-purpose (class A, B, and C) fire extinguisher mounted in an easily accessible location.
  - ✓ Braking systems, controls, safety devices must be maintained in effective operating condition.
  - ✓ The operator must inspect the equipment at the beginning of the shift and test for acceptable

- ✓ operation as per the equipment's manufacturer's instructions. Inspections must be documented and filed.
- ✓ Only qualified personnel must be allowed to operate equipment. Qualification must be documented and filed.

In case any worker violates any of the EHS rules identified by BHEL as above, following punitive action shall be taken:

First Offence	Second Offence	Third Offence	Fourth Offence
Oral warning	*Gate Pass Punched*	*Gate pass punched (second)*	*Gate Pass Punched(third) and person sent out of the gate* *Photo of concerned worker to be displayed on Notice boards and prominent locations.*

BHEL has the right to send out such person even earlier than fourth offence after considering the severity of the offence and/or the persons track record related to following general/EHS rules.

BHEL reserves right to expel even concerned supervisor or engineer as well in case of repeat of such cases of indiscipline.

Note:
The appellate authority in this case shall be the BHEL Site In-charge whose decision shall be final on the matter and binding on all parties.

8. PLANNING FOR HSE

A. Identifying Hazards / Risks & Aspects / Impacts and implementing control measures

1. Subcontractor shall identify all OHS Hazards and Risks applicable to all activities in scope as per *HSEP01: HSE Procedure for OHS Hazards and Risks*, and plan & implement the required control measures.

2. Subcontractor shall identify all Environmental Aspects and Impacts applicable to all activities in scope as per *HSEP02: HSE Procedure for Environmental Aspects and Impacts*, and plan & implement the control measures.

B. Register of Regulations:

Subcontractor shall prepare a register of applicable rules and regulations in the scope as per

HSEP03: HSE Procedure for Register of Regulations and plan to ensure compliance.

The detailed plans and registers in A and B to be submitted to BHEL for review and approval within 60 days of start of work at site.

Note: The plans above are dynamic and shall be periodically reviewed as per BHEL requirement.

8.1 MOBILISATION OF MACHINERY / EQUIPMENT / TOOLS

1. Subcontractor shall furnish to BHEL, the Test Certificates issued by the jurisdictional competent persons of machinery, equipment and other T&Ps to be deployed at site, before deployment. BHEL reserves the right to disallow the same if found non-conforming to HSE / legal requirements

2. As a further measure to ensure that machinery, equipment and tools being mobilized to the construction site are fit for purpose and are maintained in safe operating condition and comply with legislative and owner requirement, inspection shall be arranged by in-house expert / competent authority (preferable) for acceptance. (**Report Format: HSEP:14-F15)**

3. **The equipment considered for this purpose shall include all those in the T&P list in the tender document. Conventional Hydra crane with carriage in front shall not be permitted. Other models like FX or TRX series of Escorts or equivalent shall be permitted.**

4. In the course of work, the subcontractor shall notify the BHEL Engineer, of his intention to bring on to site any equipment or any container, with liquid or gaseous fuel or other substance which may create a hazard.

5. The Engineer shall have the right to prescribe the condition under which such equipment or container may be handled and used during the performance of the works and the subcontractor shall strictly adhere to such instructions.

6. The Engineer shall have the right to inspect any construction tool and to forbid its use, if in his opinion it is unsafe. No claim due to such prohibition will be entertained.

7. Following items should be only ISO certified and not more than 2 yr. of purchase
    i. Chain pulley block
    ii. Wire rope slings
    iii. Grinding machine and wheel and buffing wheel
    iv. Gas cutting equipment
8. Following equipment should not be more than 5 Yr. old
    1. Welding machine
    2. Vibrator Machine
    3. Concrete cutter
    4. DB/Electrical panel
9. **Office Infrastructure** - subcontractor shall arrange a computer / Laptop with Network

connection, chair and table for HSE Staff to facilitate HSE reporting and recordkeeping.

8.2 MOBILISATION OF MANPOWER

1. As a measure to ensure that manpower being mobilized to the construction site is fit and competent for safe working, screening arrangement shall be made by the sub-contractor to ensure fulfillment of contractual as well as legislative requirement by:

i. Ensuring the required qualification/ training/ certification/ license and experience for the job as per Section 7 of this document & applicable legal requirements

ii. **Medical Checkup:** Examination of medical fitness shall be conducted through qualified medical professional for all workers to be deployed. (Record: Format No. HSEP14:F02)**.** For height workers, height phobia test to be carried out as qualification criteria.

iii. **Induction Training:** Induction training of all workers to be ensured as per clause 9.1 and HSEP04: *HSE Procedure for Training & Awareness (Record:* Format No. HSEP14:F03)

Only on successfully meeting above criteria, permanent gate passes to be issued.

2. The subcontractor shall strictly adhere to the maximum daily working hours and other requirements as per applicable laws and shall not engage any employee below 18 years of age.
3. The subcontractor shall take special care of the employees affected with occupational diseases under rule 230 and schedule II of BOCW Rules. The employees not meeting the fitness requirement should not be engaged for such job.
4. Ensure that the regulatory requirements of excessive weight limit (to carry / lift / move weights beyond prescribed limits) for male and female workers are complied with.
5. System for Issue of Gate Passes to authorized personnel only shall be ensured at site
6. The subcontractor shall keep accurate and updated records of all manpower preferably in soft form
7. The subcontractor shall ensure appropriate infrastructure for workers as per Clause 8.4.

8.3 PROVISION OF PPEs

1. Adequate numbers of Personnel Protective Equipment (PPEs), will be made available at site & their effectiveness and regular use by all will be ensured

2. The PPEs shall conform to the relevant standards as listed in Annexure 02, and bear ISI mark.

3. The following matrix recommends usage of minimum PPEs against the respective job. For details, the respective OCPs to be referred.

Sl. No	Type of work	Suggested PPEs
1	Work at height	Double lanyard full body harness with rope grab (as applicable), retractable Fall arrestor (specific cases), Safety nets (single / double)
2	Concrete and asphalt mixing	Nose mask, hand glove, apron, gum boot, goggles
3	Welders/ Grinders/ Gas cutters	Welding/face screen, apron, hand gloves, nose mask and ear muffs if noise level exceeds 90dB. Helmet fitted with welding shield is preferred for welders, safety goggles
4	Stone/ concrete breakers	Ear muffs, safety goggles, hand gloves
5	Electrical Work	Rubber hand glove, Electrical Resistance shoes, Arc-flash resistant suit.
6	Insulation Work	Respiratory mask, Hand gloves, safety goggles
7	Grit/Sand blasting	Blast suit, blast helmet, respirator, leather gloves, safety goggles
8	Painting	Plastic gloves, Respirators (particularly for Spray painting)
9	Radiography	As per BARC guidelines
10	General	Helmets, Safety Shoes Reflective vests, ear plugs, nose masks, safety goggles

4. The exact PPEs required for a particular task shall be chosen to ensure there are multiple lines of defense against accident or injury. All applicable safety precautions for a job shall be ensured notwithstanding the duration or perceived importance of the task.
5. Additionally, the BHEL safety officer may demand additional PPEs based on specific requirement
6. The applicability of PPEs shall be as per the concept of Hierarchy of controls, i.e.: Elimination->Substitution->EngineeringControls->AdministrativeControls-PPEs
7. Relying solely on PPEs without other applicable controls to be strictly avoided.
8. The issuing agency shall maintain register for issue and receipt of PPEs (Format No. HSEP: 14-F06A). All the PPEs shall be checked for quality before issue and the shall be periodically re-checked. The users shall be advised to check the PPEs themselves for any defect before putting on. The defective ones shall be replaced.
9. The body harnesses shall be serial numbered.
10. All worker should wear reflecting Jacket during both shift Day/Night.
11. Where workers are employed in sewers and manholes, which are in use, the subcontractor shall ensure that the manhole covers are opened and ventilated at least for an hour before the workers are allowed to get into manhole, and the manholes so opened shall be cordoned off with suitable railing and provided with warning signals or boards to prevent incident to the public
12. Besides the PPEs mentioned above, the persons shall use helmet, safety shoe and reflective vest at all times. The visitors shall use Helmet and any other PPEs as

deemed appropriate for the area of work.

13. Following color scheme for Helmets to be maintained:
    a. Workmen: Yellow
    b. Safety staff: Green or white with green band
    c. Electrician: Red
    d. Others including visitors: White
14. The Helmets shall have logo or name (abbreviation of agency name permitted) affixed or printed on the front along with the person's gate pass no. & blood group. An awarded worker shall have reflective logo

8.4 ARRANGEMENT OF INFRASTRUCTURE

The subcontractor is responsible for ensuring and maintaining the required HSE infrastructure at site as described in this Section

8.4.1 DRINKING WATER

1. Drinking Water Storage Tanks shall be provided and maintained at suitable places at different elevations / locations to ensure easy accessibility. The tank/container shall be kept on a platform at an elevation of at least 2 feet and should be covered:

2. **Construction and Quantity:** The design of Drinking Water Storage Tank (DWST) shall be submitted to BHEL for approval prior to initiating construction. Provision of 5 liter water daily for each worker to be maintained.
3. **Labelling:** DWST should be labeled as "Drinking Water". Date of last cleaning, next due date shall be indicated on the container besides Date of source testing as per IS 10500.
4. Cleaning of the DWST shall be ensured at least once in a week. Mild cleaning detergents as used for cleaning vessels shall be applied and scrubbers (3M or equivalent) shall be used for removing scales and deposits on the inside surface. The tank shall be thoroughly cleaned with potable water only before it is refilled.
5. Suitability of the water source should be tested as per IS10500.
6. For all tanks containing water unsuitable for drinking, prominent "Do Not Drink" signage shall be pasted in English, Hindi and local language.
7. In Hot Work and other critical areas, drinking water shall be made available near the activity
8. Provision of supplying drinking water to height workers and those working in difficult to reach

areas shall be made available through dedicated personnel.

8.4.2 **PROVISION OF LATRINES AND URINALS AT SITE** (Ref: Interstate Migrant Workmen (Regulation & Employment and Act, 1979) read with The Inter-State Migrant Workmen (Regulation of employment and conditions of service) central rules, 1980 (PI refer rule no. 42)

LATRINES

1. Latrines shall be provided in every establishment on the following scale, namely: -

   a. Where females are employed, there shall be at least one latrine for every 25 females;
   b. Where males are employed, there shall be at least one latrine for every 25 males:

   Provided that where the number of males or females exceeds 190, it shall be sufficient if there is one latrine for 25 males or females, as the case may be, up to the first 100, and one for every 30 thereafter

2. Every latrine shall be under cover and so partitioned off as to secure privacy, and shall have a proper door and fastenings.
3. Where workers of both sexes are employed there shall be displayed outside each block of latrine and urinal a notice in the language understood by the majority of the workers **'For Men Only'**, or **For Women Ónly'**, as the case may be.
4. The notice shall also bear the figure of a man or of a woman, as the case may be.

URINALS

5. There shall be at least one urinal for male workers up to fifty and one for female up to fifty employed at a time:
6. Provided that where the number of male or female workmen, as the case may be, exceeds 500 it shall be sufficient if there is one urinal for every fifty females up to the first 500 and one for every 100 or part thereof thereafter.
7. The urinals shall be designed and located so as to ensure privacy.
8. In case a structure encompasses multiple floors, urinals shall be provided suitably for quick access
9. The latrines and urinals shall be conveniently situated and accessible to workers at all times at the establishment.
10. The latrines and urinals shall be adequately lighted and shall be maintained in a clean and sanitary condition at all times.
11. Latrines and urinals other than those connected with a flush sewage system shall comply with the requirements of the public health authorities.
12. Water shall be provided by the means of tap or otherwise so as to be conveniently accessible in or near the latrines and urinals.

8.4.3 WASHING FACILITIES

1. In every workplace, adequate and suitable facilities for washing shall be provided and maintained.
2. Separate and adequate cleaning facilities shall be provided for the use of male and female workers. Such facilities shall be conveniently accessible and shall be kept in clean and hygienic

condition and dully illuminated for night use.

3. Overalls shall be supplied by the subcontractor to the workmen and adequate facilities shall be provided to enable the painters and other workers to wash during the cessation of work.

8.4.4 PROVISION OF REST SHELTER FOR WOKERS

Proper Sheds & Shelters big enough to accommodate all possible workers shall be provided for workers to rest during break. Taking rest at height, in activity area and other hazardous locations shall not be allowed.

The drawing of such sheds shall be submitted to BHEL for approval before construction.

8.4.5 MEDICAL FACILITIES

Refer Section B for applicability of requirements pertaining to Clause 8.4.5.1

8.4.5.1 MEDICAL CUM FIRST-AID CENTER

a) A medical center shall be setup at site with basic facilities for handling medical emergencies. The medical center shall be developed independently by BHEL/an agency as specified in the contract and run jointly by all agencies on proportionate sharing basis as stipulated in the contract.
b) A qualified medical professional, not less than MBBS, shall be deployed at medical center as stipulated in the contract.(Part-time or full time as decided at the site).
c) There shall be a full-time trained first aider and a nurse. Depending upon the working hours at the site, First-aider shall be deployed accordingly.
d) The center shall have all articles as per Schedule IV of BOCW(Central) Rules'1998. In addition,, one Stokes basket stretcher shall be available.
e) An ambulance shall be deployed for every 1000 persons along with trained driver and accessories as per schedule V of Central BOCW Rules'1998. Depending upon the working hours at the site, First-aider shall be deployed accordingly.
f) The center shall be adequately equipped for Resuscitation, Immobilisation, Dressing, dealing with poisoning cases including snake and insect-bites and sufficient stock of emergency medicines as prescribed by the qualified medical professional as per point (b)

8.4.5.2 IMPORTANT

g) If there is no specific mention of responsibility of deployment or setting up of any of the above facilities and operating expenses thereof, BHEL site management shall have the liberty to give this responsibility to any of the contractors on cost sharing basis.
h) Medical waste shall be disposed as per prevailing legislation (Bio-Medical Waste –Management and Handling Rules, 1998)
i) Every injury shall be treated, recorded and reported.
j) All First Aid injuries shall be recorded as per Format No. HSEP:14-F17
k) List of qualified first aiders and their contact numbers to be displayed at conspicuous places.

8.4.5.3 FIRST AID

A. In addition to 8.4.5.1 &2, The subcontractor with Boiler&ESP, TG, Civil shall:

1. Provide necessary first aid facilities for every work place.
2. Ensure availability of qualified First-aider throughout the working hours.
3. Every injury shall be treated, recorded and reported.
4. Refresher course on first aid shall be conducted as necessary.
5. List of qualified first aiders and their contact numbers to be displayed at conspicuous places.
6. All First Aid injuries shall be recorded as per Format No. HSEP:14-F17

B. FIRST AID BOX

1. The first aid box shall be maintained by first aider who shall always be readily available during the working hours of the work place.
2. **Details of First Aid Box:**
   a) Details of contents of first aid box is given in **Annexure 03.** A slip of contents shall be pasted on the First Aid Box with following details:

      Name, Quantity, Expiry Date, Checked by…
   b) First Aider's name and contact no to be displayed on the box.
   c) The first aid box shall be distinctly marked with a Green Cross on white background.
   d) The box shall be properly secured with lock & key to avoid misuse
7. The first aid boxes should be placed at various locations so as to make them available within easy reach of hazardous activities and at the quickest possible time.
8. The subcontractor shall ensure that the Supervisors and Engineers are adequately trained for attending to any emergency.
9. Monthly inspection of First Aid Box to be conducted by the subcontractor as per Format no. HSEP:14-F01

8.4.5.4 HEALTH CHECK UP

The persons engaged at the site shall undergo health checkup as per the **Format no. HSEP:14-F02** before induction. The persons engaged in the following works shall additionally undergo regular health checkup using same Format at least once in a year:

Height workers	Drivers/crane operators/riggers	Confined space workers
Shot/sand blaster	Welding and NDE personnel	Any person referred by BHEL

8.4.5.4.1 HEIGHT PHOBIA TEST

1. The persons engaged in working at heights (above 2 meters) to be assessed for Height Phobia and associated conditions.
2. Such workers are to be allowed only on successful completion of this test, otherwise they shall be allocated ground based jobs. IDs / Height passes shall be issued to such workers.

8.4.6 PROVISION OF CANTEEN FACILITY

Minimum or better facilities to be ensured as per BOCW (Rule 244) / Factories Act, specially taking care of the following:

1. Canteen facilities shall be provided for the workmen of the subcontractor inside the project site.
2. Proper cleaning and hygienic condition shall be maintained.
3. Proper care should be taken to prevent biological contamination.
4. Adequate drinking water should be available at canteen.
5. Fire extinguisher shall be provided inside canteen.
6. Regular health check-up and medication to the canteen workers shall be ensured.
7. Canteen waste to be disposed of in compliance with law
8. Domestic LPG cylinder shall not be used
9. Canteen should be periodically inspected using standard checklist finalized along with BHEL

8.4.7 PROVISION OF ACCOMMODATION / LABOR COLONY

1. The subcontractor shall provide to every workman (within fifteen days of the commencement of the employment of migrant workmen):

a) In case he is accompanied by any other member of his family, a suitable barrack so as to accommodate one room having at least a floor area of 10 square meters, a verandah and adequate additional covered space for cooking food as well as one common sanitary latrine, one common bathroom for every three such quarters; and

b) In case he is unaccompanied by any other member of his family, a suitable barrack so as to accommodate not more than ten such migrant workmen, having at least a floor area of not less than 6.5 square meters for each such migrant workman making use of the barrack, a verandah and adequate additional covered space for cooking food as well as one common sanitary latrine and one common bathroom for every ten such migrant workmen

2. Every quarter and the barrack shall be so constructed as to afford adequate ventilation, protection against heat, wind, rain and shall have smooth, hard and impervious floor surface.
3. The quarters or the barracks, as the case may be, shall be at a convenient distance from the establishment and shall have adequate supply of wholesome drinking water.
4. The area in which the quarters and/or barracks are located as well as the latrines and bathrooms provided therein shall be kept in a clean and sanitary condition at all times.
5. Regular housekeeping of the labor colony shall be ensured.
6. Availability of Bathing/ washing bay to be ensured

7. Room ventilation and safe electrification to be ensured
8. MSDS of LPG shall be put up prominently and shall be included in the induction training also.
9. The labor colony shall be secure so that only authorized persons have access to it.
10. Availability of local market to be ensured by the Sub-contractor
11. A "Suggestion Register" shall be made available at the labor colony for workers. The feedback shall be reviewed on weekly basis and acted upon.
12. Labor colony shall be inspected fortnightly by Subcontractor Safety Officer & HR executive, and report submitted to BHEL as per Format No. HSEP:4-F16
13. **Facility of Crèches –** to be provided wherein more than fifty female workers are deployed
14. Provisions of Clause 8.4.1, 8.4.2 and 8.4.3 shall be applicable on labor colony as well

8.4.8 PROVISION OF EMERGENCY VEHICLE

Dedicated emergency vehicle shall be made available at workplace by subcontractor for evacuation of victim from site.
However, Ambulance shall be used exclusively for transporting victim to hospital

8.4.9 PEST CONTROL

Regular pest control should be carried out at all offices, mainly laboratories, canteen, labor colony and stores by the subcontractor.

8.4.10 SCRAPYARD

1. Scrapyard shall be developed by subcontractor to store metal scrap, wooden scrap, waste, hazardous waste.
2. Scrap/Waste shall be segregated as Bio-degradable and non-bio-degradable and stored separately.

8.4.11 ILLUMINATION

1. The subcontractor shall provide adequate lighting facilities e.g. flood lighting, hand lamps, area lights etc. to ensure adequate lighting at all work places & their approaches including passage ways as per IS: 3646 (Part-II) at all times. Indicative recommended values are given below:

S. No.	Location	Lux Level
A.	**Construction Site**	
1	Outdoor areas like store yards, entrance and exit roads	**20**
2	Platforms	**50**
3	Entrances, corridors and stairs	**100**
4	General illumination of work area	**150**
5	Rough work like fabrication, assembly of major items	**150**

6	Medium work like assembly of small machined parts	**300**
7	Fine work like precision assembly, precision measurements etc.	**700**
8	Sheet metal works	**200**
9	Electrical and instrument labs	**450**
B.	**Office**	
1	Outdoor area like entrance and exit roads	**20**
2	Entrance halls	**150**
3	Corridors and lift cars	**70**
4	Lift landing	**150**
5	Stairs	**100**
6	Office rooms, conference rooms, library reading tables	**300**
7	Drawing table	**450**
8	Manual telephone exchange	**200**

In case any area is not mentioned above, the applicable illumination for the same shall be specified by BHEL based on applicable standards and international norms

1. Level of illumination shall be checked periodically using a calibrated lux meter and recorded for each work area on minimum weekly basis as per Format No. HSEP:14-F21
2. Lamp (hand held) shall not be powered by mains supply but either by 24V or dry cells.
3. Lamps shall be protected by suitable guards where necessary to prevent danger, in case of breakage of lamp.
4. Emergency lighting provision for night work shall be made to minimize danger in case of main supply failure.

9. HSE TRAINING & AWARENESS

9.1 HSE INDUCTION TRAINING

1. All persons entering into project site shall be given HSE induction training before being assigned to work, which shall be imparted through audio-visual medium and shall be of minimum 2-hour duration.

2. Any single trainee batch size should not exceed 40.

3. Proper safety wear & gear must be issued to all the workers being registered for the induction (i.e., Shoes/Helmets/Goggles/Leg guard/Apron etc.)

i. They must arrive fully dressed in safety wear & gear to attend the induction.
ii. Any one failing to conform to this safety wear& gear requirement shall not qualify to attend.

4. In-house induction training subjects shall include but not limited to:

i. Briefing of the Project details and importance of employee for the project and for the nation.
ii. Safety related cardinal rules, objectives and targets.
iii. Site HSE rules.
iv. Site HSE hazards and aspects.
v. First aid facility.
vi. Emergency Contact No. and procedures
vii. Details of Fire prevention and emergency response systems & procedures at site.
viii. Requirement of incident / near miss reporting by all.
ix. Accident case studies
x. Rules to be followed in the labor colony (if applicable)

5. Evaluation to be carried out after training and induction training to be repeated in case of failure of participant in evaluation

6. On completing subcontractor's in-house HSE induction, each employee shall sign an induction training form (format no. HSEP: 14-F03) to declare that he had understood the content and shall abide to follow and comply with safe work practices. They may only then be qualified to be issued with a personal I.D. card, for access to the work site (provided Health Checkup is over).

9.2 HSE TOOLBOX TALK

1. HSE Tool Box talk shall be conducted by frontline foreman/supervisor of subcontractor to specific work groups daily prior to the start of work. The agenda shall consist of the following:

   i. Visual checkup of workers regarding health, any signs of fatigue, intoxication etc.
   ii. Details of the job being intended for immediate execution.
   iii. The relevant hazards and risks involved in executing the job and their control measures.
   iv. Specific site condition to be considered while executing the job like high temperature, humidity, unfavorable weather etc.
   v. Recent non-compliances observed.
   vi. Appreciation of good work and warning for any unsafe acts done by any person.
   vii. Any doubt clearing session at the end

2. Record of Tool box talk shall be maintained as per Format no. HSEP:14-F04

9.3 TRAINING ON HEIGHT WORK

Due to the large percentage of fall from height in incidents, training of minimum 2-hour duration on height work shall be imparted to all height workers by in- house / external faculty for every batch of new inductees. The training shall include following topics:

1. Inspection of work area, access and egress w.r.t height hazards
2. Use of PPEs; use of fall arrester, retractable fall arrester, life line, safety nets etc.
3. Safe climbing through monkey ladders.
4. Inspection of PPEs.
5. Medical fitness requirements.
6. Mock drill on rescue at height.
7. Dos & Don'ts during height work.

8. Accident case studies

In case, above is organized by BHEL, proportionate cost shall be borne by subcontractors

9.4 HSE TRAINING DURING PROJECT EXECUTION

1. HSE training shall be arranged by subcontractor as per the need of the project execution and recommendation of BHEL.
2. The topics of the HSE training shall be as follows but not limited to:

i. Hazards identification and risk analysis & Identification of Environmental Aspects / Impacts
ii. Work Permit System
iii. Learning from past incidents
iv. First aid, Firefighting & Fire-warden training
v. EMS and OHSMS
vi. T & Ps fitness and operation
vii. Electrical & Chemical safety
viii. Welding, NDE & Radiological safety
ix. Material handling.

3. Safety awareness and on-the-job training programmes shall be carried out at site for all workers periodically. Periodicity to be decided by BHEL but shall be minimum once in six months
4. Penalty Training – In case of any incident, the involved person, group or agency shall undergo a penalty HSE training for a minimum period of 2 hrs or as decided by BHEL.
5. In case it is not possible to provide training to all workers at once, same shall be imparted in Batch-wise manner so as to cover all workers with specified periodicity.
6. An up-to-date record to be maintained with attendance of participants and trainers preferably in soft copy as per Format No. HSEP:14-F03.
7. Every employee of agency should be provided at least 2 hr. safety training in every month.

In case, above is organized by BHEL, proportionate cost shall be borne by subcontractors

10. HSE PROMOTION: SIGNAGE, POSTERS, COMPETITION, AWARDS ETC

10.1 DISPLAY OF HSE POSTERS AND BANNERS

Site shall arrange appropriate posters, banners, slogans in local/Hindi/English languages at work place.

10.2 DISPLAY OF HSE SIGNAGE

Appropriate HSE signage shall be displayed at the work area to enhance awareness of HSE workmen and passersby about the work going on and do's and don'ts to be followed.

10.3 COMPETITIONS ON HSE, AWARDS & REWARDS

1. Subcontractor shall arrange competitions (slogan, poster, essay etc.) on HSE for workers and employees from time to time (Safety day, World Environment Day etc. minimum one such function each month) and winners will be suitably awarded during the functions.

2. Subcontractor shall identify workers following good HSE practices and reward them from time to time as encouragement to follow good HSE practices.

3. Alternatively, if a common monthly function is organized at site, subcontractor shall participate in the same so that a minimum frequency of one such function per month is maintained.

10.4 HSE AWARENESS PROGRAMMES

Subcontractor shall arrange HSE awareness programmes periodically on different topics including medical awareness for all personnel working at site from time to time including officials involved in execution.

11. HSE COMMUNICATION AND PARTICIPATION

11.1 MONTHLY HSE REPORTING

1. HSE activities shall be reported to BHEL monthly as per Format no. HSEP: 14-F05. The reporting medium can be hard/soft as per BHEL requirement.

2. The period of reporting shall be 25th of the preceding month to 24th of the present month and report shall be submitted by the end of the calendar month or as conveyed by BHEL.

3. BHEL can modify the reporting requirements as per requirement

11.2 HSE EVENT REPORTING

1. Important HSE events like HSE Training, Mock / Fire/Rescue Drills, Medical camp etc. organized by subcontractor shall be reported to BHEL in detail with photographs

2. Celebration of important days like National Safety Day, World Environment Day etc. shall also be reported likewise.

11.3 HSE INCIDENT REPORTING

All incidents (near misses, property damage, first-aid cases, minor, major and fatal incidents) shall be reported to BHEL as they happen through SMS and Hard/Soft copy as per Format No. HSEP: 14-F22

11.4 HSE SUGGESTIONS

All workers and employees to be encouraged to provide suggestions for improvement in

Health, Safety & Environment at site. The suggestions to be recorded in a "Suggestions Register". Suggestions to be reviewed and those having potential of significant beneficial effects are to be implemented, and recognition / award to be given to the individual.

11.5 CLIENT COMMUNICATON

All HSE related communication from BHEL, customer / external statutory and regulatory agencies to be handled on priority. The relevant issues to be resolved in expeditious manner

11.6 RECORDS OF COMMUNICATON

Records of all communication and their responses as detailed above shall be maintained by subcontractor in hard / soft copy and produced when required.

12. INCIDENT REPORTING, INVESTIGATION & CORRECTIVE ACTION

1. A conducive environment for reporting of near misses and other incidents shall be developed at site through system of rewards etc.
2. Priority to be given to ensure medical treatment of the victim. Victim to be given immediate First Aid and transported to Medical Facility in a well-equipped Ambulance
3. All incidents, as they happen, shall be reported to BHEL immediately over phone/SMS/Whatsapp/mail and then in Format No. HSEP:14-F22 within 24 hrs. of occurrence. Immediate SMS shall be sent to concerned Package In-charge with following Details:
    a. Project & Customer Name:
    b. Subcontractor Name & Scope:
    c. Incident Area:
    d. Number of Injured / Fatalities:
    e. Date & Time of Accident:
    f. Incident Description in few lines:

    No incident shall be hidden
4. Records of all incidents shall be maintained in hard / soft copy as per Format No. HSEP:14-F23.
5. For all incidents:
    a. The incident area, equipment / tools involved, documents & records etc. shall be maintained as-it-is pending investigation
    b. Root Cause Analysis (RCA) to be conducted and corresponding Corrective / Preventive Action (CAPA) ensured
    c. Responsibility shall be assigned and action to be taken against the erring individual
    d. In case presence of manufacturer of the equipment involved is required, subcontractor will arrange the same

e. All expenses pertaining to the RCA / CAPA shall be borne by the subcontractor

6. RCA and CAPA reports of all near misses and minor injuries shall be identified and report submitted to BHEL within 7 days of occurrence.
7. For incidents, where worker does not resume duty within 48 hours of occurrence, Joint investigation along with BHEL shall be conducted within 7 days, and CAPA ensured.
8. Corrective action shall be immediately implemented at the work place. Work shall be put on hold in the area till corrective actions are verified by BHEL
9. All incidents, their Root Cause Analyses and Corrective actions shall be recorded, and analyzed so as to identify weak areas and actions to be taken to reduce the incident trend.

13. SAFETY DURING WORK EXECUTION

13.1 HSE SYSTEMS AND PROCEDURES

BHEL Power Sector HSE Management System (HSEMS) shall be referred for controlling hazards, aspects, and carrying out HSE activities at site. Subcontractor shall get familiar with and follow the HSEMS documents provided by BHEL which include the follows:

13.1.1 HSE PROCEDURES:

All HSE Procedures defined in HSEMS, as referred in various sub-clauses of this Section as given in Annexure 01

13.1.2 PERMIT TO WORK (PTW) SYSTEM

1. The following activities shall be carried out by the subcontractor strictly after obtaining Permit to Work (PTW) from BHEL

   i. General Work Permit (**Format No. HSEP14-FP01)**
   ii. Height working (**Format No. HSEP14-FP02)**
   iii. Hot working (**Format No. HSEP14-FP03)**
   iv. Confined space Work (**Format No. HSEP14-FP04)**
   v. Excavation more than 2-meter depth (**Format No. HSEP14-FP05)**
   vi. Radiography / Radiation Work (**Format No. HSEP14-FP06)**
   vii. Heavy / Complex / Critical Lifting Activity (**Format No. HSEP14-FP07)**
   viii. Night / Holiday Work (**Format No. HSEP14-FP08)**
   ix. Material Loading / Unloading Permit (**Format No. HSEP14-FP09)**
   x. Grating / Safety Net / Safety Facility Removal Permit (**Format No. HSEP14-FP10)**
   xi. Live Electrical Maintenance etc. - Lockout / Tag (**Format No. HSEP14-FP07)**

2. The above list is not exhaustive. BHEL reserves right to introduce additional Permits or modify requirements for usage of existing Permits. The conditions for using the Permit are specified in the Format (General Requirements).

3. Where customer is having separate Work Permit System the same shall be followed in conjunction to ensure all activities and checks are covered in all systems.

4. Permit applicant shall apply for work permit of particular work activity at particular location before starting of the work along with Job Hazard Analysis.

5. All Permit signatories shall physically visit the work area and check that all the safety control measures necessary for the activity are in place. Only then the permit shall be issued.
   a. Signatory shall physically visit the area of work and ensure all required safeguards before signing the Permit
   b. Signatory shall periodically visit the area to confirm the availability of required safeguards throughout the currency of the permit
   c. In case any Permit requirement is not available, work will be stopped till it is made available

6. Permit holder shall implement and maintain all control measures during the period of permit. The permit will be closed after completion of the work and submitted to BHEL.

13.1.3 Operational Control Procedures

1. All applicable OCPs (Operational Control Procedures) as identified from outcomes of HIRA, Aspect / Impact studies and BHEL inputs will be followed by subcontractor. This will be done as part of normal scope of work.
2. Illustrative list of such OCPs is given in Table 13.1 and same will be made available to subcontractor by BHEL during work execution at site.
3. In case any other OCPs are required or existing ones need to be modified in order to control the risks / impacts associated with any activity during the execution of work subcontractor shall prepare / update and follow the same with information to BHEL.

Table 13.1 - LIST of Reference OCPs

No.	Topic	No.	Topic	No.	Topic
0	General Safety	20	Oil flushing	40	Gas distribution test
1	Handling of chemicals	21	Alkali boil out	41	Cleaning of Hotwell / Deaerator
2	Electrical safety	22	Steam blowing	42	Electrical maintenance
3	Energy conservation	23	Working in confined area	43	O&M of control of AC plant & system
4	Welding and gas cutting operation	24	Operation of passenger lift, material hoists & cages	44	Material preservation
5	Fire safety	25	Vehicle/ Crane maintenance	45	Electro-resistance heating
6	Use of hand tools	26	Radiography	46	Blasting
7	First aid	27	Waste disposal	47	Transformer charging

8	Food safety at canteen	28	Handling & storage of mineral wool	48	Handling of battery system
9	Use of cranes	29	Working at night	49	DG set
10	Storage and handling of gas cylinders	30	Computer operation	50	Sanitary maintenance
11	Manual arc welding	31	Storage in open yard	51	Piling rig operation
12	Use of helmets	32	Drilling, reaming and grinding(machining)	52	Passivation
13	Good house keeping	33	Stress relieving	53	EDTA Cleaning
14	Safe excavation	34	Hydraulic test	54	Chemical cleaning of Pre boiler system
15	Working at height	35	Trial run of rotary equipment	55	Boiler Light up
16	Filling of hydrogen in cylinder	36	Batching	56	Rolling and Synchronization
17	Illumination	37	Cable laying/tray work	57	Loading of Unit
18	Handling and erection of heavy metals	38	Spray insulation	58	Air compressor
19	Acid cleaning	39	Compressor operation	59	Hydra Operation

13.2 ACTIVITY SPECIFIC REQUIREMENTS FOR SAFETY:

All Work shall be commenced only after taking the respective Work Permits (as applicable) and precautions as per relevant codes, systems and OCPs in order to ensure safe conditions throughout the duration of work. Additionally, activity specific safeguards as per this section shall be followed.

13.2.1 WORK AT HEIGHT:

1. All work at height above 2 meter above ground level without complete platforms, handrails and other related fall protection shall require a work permit in the prescribed form. This shall require approval by the competent authority. The HSE officer of sub-contractors shall follow the checklist religiously by physically verifying the condition of the work area before recommending for approval.

2. Prior to the start of work at elevation, the HSE Officer involved with the work must meet the work supervisor to review the scope of work, and must review all the possible fall hazards and effective safety responses. The evaluation / analysis must be documented and kept on file and on site by the HSE Officer.

3. Whenever a fall hazard or other exposure exists for working at heights more than 2.0m/6ft, the nature and scope of work will be evaluated for conditions and environmental factors before selecting the appropriate fall protection system (active, passive or a combination of measures, as appropriate).

4. All Engineering and Administrative Controls including barricading, safe platform, Safety Nets etc. shall be made available at work location. Under no circumstances, there shall be total reliance on PPEs only

5. **Safety Nets**

   a. Contractor shall maintain sufficient stock of Safety Nets for deployment
   b. Safety Nets as per IS: 11057:1984 should be used extensively for prevention / arrest men and materials falling from height.
   c. The safety nets shall be fire resistant, duly tested and shall be of ISI marked.
   d. Safety Nets shall be deployed below all platforms where height work is envisaged. Duration of work, delay shall be no excuses for non-installation of Safety Net

6. Reaching beyond barricaded area without lifeline support, moving with support of bracings, walking on beams without support, jumping from one level to another, throwing objects and taking shortcut must be discouraged.
7. Monkey Ladder shall be fitted with cages. Rope ladder should be discouraged.
8. In case of pipe-rack, persons should not walk on pipes and walk on platforms only.
9. In case of roof work, walking ladder/ platform should be provided along with lifeline and/ or fall arrestor.
10. For chimney or structure painting, both hanging platform and men should be anchored separately to a firm structure along with separate fall arrestor.
11. The procedures for the safety response to identified fall hazards developed and rescue plans must be reviewed with all individuals exposed to the hazards.
12. The HSE Officer must establish an inspection process of fall protection systems. Some equipment requires documented inspections by its manufacture on a regular schedule. Such equipment must have evidence of the inspection and re-certification process on it. This information must be reviewed before the equipment is actually used. Individuals must visually inspect the fall protection equipment before each use. Failure to complete this inspection process could result in serious injury or death.
13. Immediately remove from service any fall protection equipment that is identified as defective, damaged, or has been subjected to an impact. Damaged fall protective equipment must be destroyed to prevent re-use and not be discarded into trash containers, as the worn or damaged equipment could be unintentionally re-used.
14. Aerial lifting devices, excluding scissor lifts require the use of full body harnesses and lanyards in any elevated position.

13.2.1.1 Personnel fall protection system must include:

a. Safety Harness

All height workers must use Safety harness with double lanyards. The primary lanyard is never unhooked until the secondary lanyard is secure. The design of the working platform should be such that u**nder no circumstances, worker should have both lanyards unhooked while at height.**

b. Lanyard

i. The type of work and the environment conditions determine lanyard and lifeline selection. If welding, chemical cleaning that may damage lanyards, connectors or lifelines, sandblasting, etc., either protect the components or use more appropriate type of system.

ii. Lanyards and lifelines must incorporate, or be used with, an appropriate deceleration (shock absorbing) device. Deceleration devices include rope grabs, rip-stitch lanyards, specially woven lanyards, tearing, or deforming lanyards, automatic self-retracting lifelines and lanyards which dissipate or limit the energy imposed on the employee during fall arrest.

iii. Once in use, the system's effectiveness is to be monitored. In some cases, a program for cleaning and maintaining the system may be necessary. Lanyard and lifelines must use locking snap hooks only and under no circumstances must two lanyard snap hooks be connected.

c. Lifeline

All lifelines in general are to be made of min 8mm dia steel rope (plastic coated) and tied to columns with 3 clamps at each end. Wherever columns are not available to tie the lifelines, the vertical posts as per the design below are to be provided after carrying out drop load test initially. A load of 240kg to be dropped off the mid-point of lifeline in this test.

d. Lifeline Post

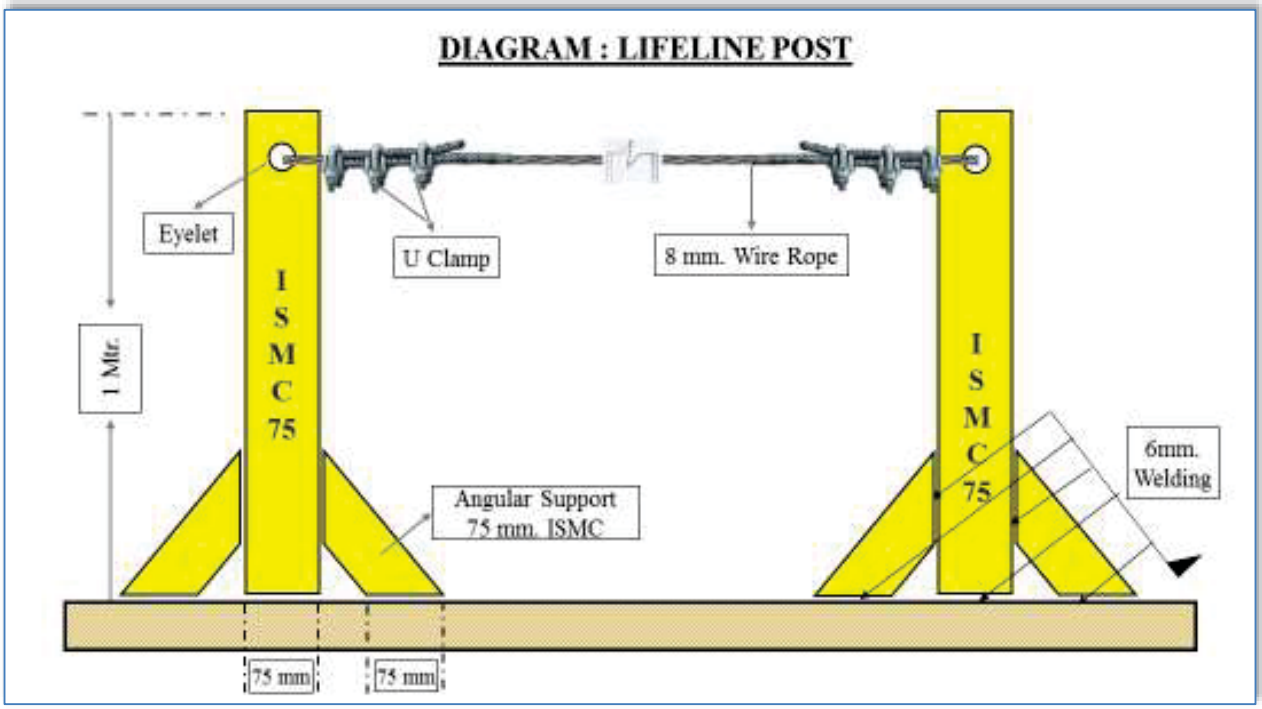

Fig. 13.2.1.1 Lifeline Post

i. The support at vertical post shall be fixed at end-to-end. The maximum length of one end to another end shall be 18 meters
ii. If the length of a lifeline is more than 18 meters, then intermediate vertical post(s) are to be used. Such intermediate post(s) will act as supports and the lifeline rope should simply pass through the eyelets (holes) of such supports without being anchored
iii. The lifeline need not be wrapped / clamped to any intermediate post
iv. Such intermediate posts must be used at an interval of every 18 meters
v. The post(s) in which the original lifeline is to be installed should be capable of sustaining a tensile stress of 2268 Kgs
vi. In a horizontal lifeline installation, maximum allowable sagging is 500-600 mm
vii. For a single spun lifeline, no more than 2 persons are allowed to work; for more than two workers, another lifeline should be installed
viii. Horizontal lifeline should be so installed that it does not impede safe movement of workers
ix. All the installation work must be carried out by competent person with adequate knowledge

13.2.1.2 Working Platform

1. Working platforms, gangways and stairways shall be so constructed that they do not sag unduly or unequally and if the height of the platform gangways provided is more than 3.6 m above ground level or floor level, they shall be closely boarded and shall have adequate width, which shall not be less than 750 mm and be suitably fenced.

2. Precautions against the fall of Materials, Persons and Collapse of Structures

i. Every opening in the floor or a building or in a working platform shall be suitably barricaded to prevent the fall of persons by providing suitable fencing or railing whose minimum height shall be 90 cm.

ii. Adequate precautions should be taken such as the provision of fencing, or barriers to protect any person who might be injured by the fall of materials, or tools or equipment being raised or lowered. Cradle may be used for lifting materials - however this shall be made of MS angles and flats only and duly certified by the HSE officer. Operators may also use designed containers for lifting small tools.

iii. Guardrails (including scaffolding) erected over/adjacent working areas must have the guardrails screened (opening < 0.5), to prevent material from falling outside the platform/decking.

iv. Guardrails must be able to withstand a 200-pound force exerted in any one direction.

v. Where necessary to prevent danger, guys, stays or supports should be used or other effective precautions should be taken to prevent the collapse of structures or parts of structures that are being erected, maintained, repaired, dismantled or demolished.

vi. All openings through which workers are liable to fall should be kept effectively covered or fenced and indicated in the most appropriate manner.

vii. Guardrails and toe-board/barricades and sound platform conforming to IS: 4912-1978 and other Indian laws and regulations as depicted below should be provided.

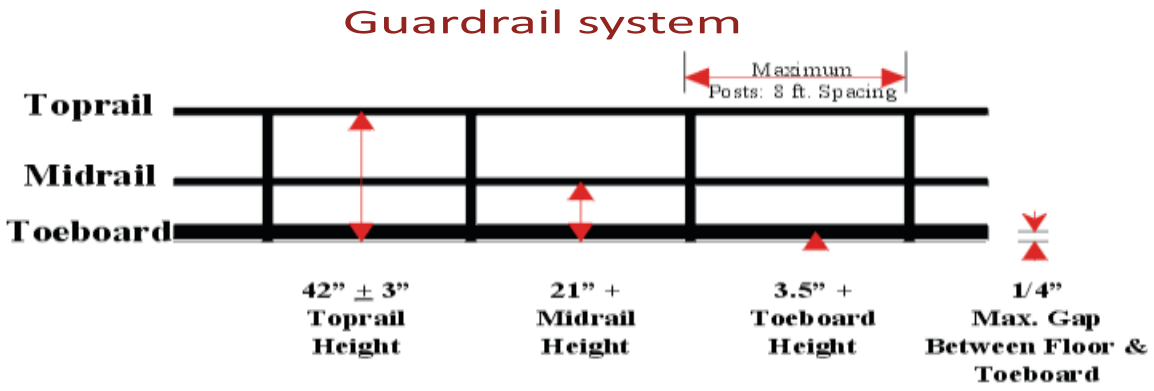

Fig. 13.2.1.2 Guard Rail System

viii. Guardrails shall be provided to protect workers from falling from elevated work places. The rails are generally made of MS pipes of suitable dia. Rebar shall not be used for any handrails, ladder or cover purpose. Wherever the guard-rails and toe-boards cannot be provided:

a. adequate safety nets or safety sheets shall be erected and maintained; or
b. adequate safety harnesses shall be provided and used and / or
c. adequate fall arrestor shall be provided and used.

As mentioned under PPE clause, all these PPEs shall be defect free and regularly inspected for any defect. The full body safety harness shall have double lanyard only with max 1.8m length.

ix. The monkey ladders shall have sufficient fall arrestors. Adequate lifelines of 8mm steel wire

rope shall be provided across the work area.

x. The HSE officer shall recommend appropriate PPEs after analyzing hazards and risks involved.

13.2.1.3 Scaffolding

All scaffolds shall be conformant to the relevant standards including IS 3696 and IS 4014 as applicable. A sketch of the scaffolds proposed to be used shall be prepared and approval of the BHEL Engineer obtained prior to construction / use.

General

1. The scaffolding work must be carried out by a competent person, who shall train the scaffold users on safety aspects
2. All scaffolds shall be erected / dismantled by scaffolding crew under direct supervision of competent scaffolding supervisors.
3. All scaffolds shall be capable of supporting 4 times maximum intended load and erected on sound, rigid footing, capable of carrying the maximum intended load without settling or displacement. Bamboo scaffolding is not permitted for use on site.
4. Each employee on the scaffold shall use an approved safety harness attached to an independent lifeline. The lifeline is to be securely attached to substantial members of the structure (not the scaffold itself) or to securely rigged lines, which shall safely suspend a worker in event of a fall.
5. Guard rails and toe boards shall be installed on all open sides and ends of platforms more than (2) meters above ground or floor
6. Scaffold planks must be at least 5 cm x 25 cm (2” x 10”) full thickness lumber scaffold grade or better.
7. Scaffold planks shall not span distances greater than 2.5 meters (8 feet).
8. Scaffold planks shall extend over end supports not less than 6 inches nor more than 12 inches and be secured to the scaffold. Scaffolding and accessories with defective parts shall be immediately repaired or replaced.
9. All scaffolding must be a minimum of two planks wide. No one may work from a single plank.
10. Scaffold planks must be inspected before use. Planks that have been damaged must be removed from the site.
11. Access ladders must be provided for each scaffold. Climbing the end frames is prohibited unless the design incorporates an approved ladder.
12. Adequate mudsills or other rigid footing capable of withstanding the maximum intended load must be provided.
13. Scaffolds more the 6 meters (20 feet) in height must be tied to the building or structure at intervals which do not exceed 4 meters (13 feet) vertically and 6 meters (20 feet) horizontally.
14. Do not overload scaffolds. Material should be brought up as needed. Scaffolding must not be loaded in excess of its rated capacity.
15. Barrels, boxes, kegs, blocks or similar unstable object must never be used as work platforms or to support scaffold.
16. Where persons must work under or pass under a scaffold then a 18 gauge wire mesh screen must be installed between the toe board and guard rail.
17. Employees exposed to overhead hazards while working on a scaffold will be protected by 5 cm (2”) thick planks.
18. Wooden/bamboo ladders shall not be allowed at any cost. Ladder’s rungs shall be fitted /welded properly. Before every use the rungs should be checked for safe use.

19. Wooden scaffolds shall not be used in areas where fire / fire products are expected
20. Ropes made of jute / Plastic and other fire prone material shall not be used to tie up scaffolding components together
21. The platform should have permanent hand rail and mid rail with Toe board without fail.
22. All platforms are to be tightly planked for the full width of the scaffold, except as may be necessary for entrance openings. Platforms shall be secured in place.
23. On suspension scaffolds designed for a working load of 500 pounds, no more than two workers are permitted to work on the scaffold simultaneously. On suspension scaffolds with a working load of 750 pounds, no more than three workers are permitted on the scaffold simultaneously.

24. Requirements for different types of Scaffolds:

A. Suspended Scaffold

i. Suspended scaffolds are platforms suspended by ropes, or other non-rigid means, from an overhead structure.
ii. Requirements for use are to be preapproved by HSE Head, under a specific Permit to Work.

B. Rolling Scaffolds

i. The height of rolling scaffolds shall not exceed three times the minimum base dimension.
ii. The minimum base dimension of rolling scaffold will be 1.25 meters (4 feet).
iii. Adequate help must be provided when moving a rolling scaffold.
iv. Secure or remove all loose materials, equipment and tools before moving a rolling scaffold.
v. No one is permitted to ride a rolling scaffold when it is being moved. Castor brakes must be locked-on when the scaffold is not being moved.

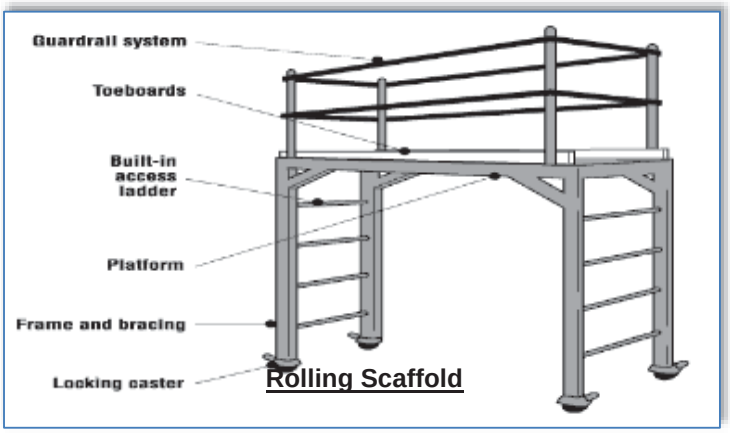

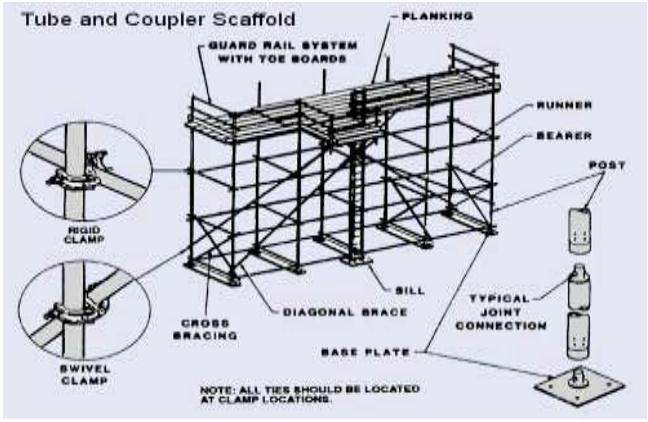

Fig. 13.2.1.3 Types of Scaffolds

25. Scaffold Tagging

Scaffolds being erected, modified or dismantled must be tagged as suitable for use. The scaffolds can only be accessed by those involved with the process.

GREEN scaffold tag- shall be fixed when scaffold is complete and safe for use, signed and dated by

the scaffolding competent person daily.

RED scaffold tag – to be fixed if scaffold is in some way defective and cannot be used or is still under erection.

Examples of scaffold tags:

Fig. 13.2.1.4 Scaffold Tagging

13.2.1.4 Ladder Safety

A sketch of the ladders proposed to be used shall be prepared and approval of the BHEL Engineer obtained prior to construction / use

Safe Use of Ladders:

1. Fall protection is required when working on a ladder above 2 meters and when climbing above nearby guardrails.
2. Ladders must be inspected prior to use and by a competent person quarterly, with documentation.
3. Use portable ladders for height up to 4 M only
4. Provide fixed ladders for height above 4 M
5. Place the ladder at an angle of 75 degrees (approx.) from the horizontal (1:4)
6. Extend ladder at least 1 M above the top landing
7. Secure top and bottom of the ladder firmly to prevent displacement- anti skid lining at the bottom
8. Ensure that the width of the ladder is not less than 300 mm and distance between rungs is not more than 300 mm
9. Provide landings of minimum size 600 x 600 mm at intervals not more than 6 M for fixed ladders. Check the ladders daily for any defects
10. Ensure that the areas around base and top of the ladder are clear. Getting on and off the ladder is more hazardous than using it. Use a mudsill if the ladder is to rest on soft, lose or rough soil
11. Do not use ladders of conducting material near power lines, and only use ladders near power line or other energize system with exposed parts if they are confirmed locked-out and de-

energized.

12. Stand no higher than the fourth rung from the top for carrying out any job standing on a ladder.
13. Never reach out from a ladder to perform work where your belt buckle protrudes past the ladder rung.
14. Always face the ladder while climbing up or down
15. Maintain three-point contact while climbing up or down a ladder i.e. two hands and one foot or two feet and one hand on the ladder at all the times.
16. Avoid climbing up or down a ladder while carrying anything in hands. Lift tools, equipment and materials with a rope.
17. Work from portable and extension ladders near guardrail where fall expose exists over the guardrail regardless of height, and above 2.0 mtr. heights from the working/walking surface will require the use of personal fall arrest equipment

13.2.2 EXCAVATION & CIVIL WORKS

All safety precautions shall be taken for foundation and other excavation marks as per IS-3764.

13.2.2.1 Excavation

The following safety measures are to be ensured before and during excavation:

1. All Excavation activities more than with depth of 1.22 meter or more shall require and Excavation Work Permit
2. Check for underground utilities like electrical / telephone cables, sewage, water lines and proper care has to be exercised to protect and prevent damage to it
3. Proper and adequate slope is maintained while excavating
4. Adequate shoring or sheeting is done wherever require to prevent soil sliding
5. Safe access through ladder or steps for exit & entry to excavation
6. No material /excavated soil is kept within one meter from the edge
7. Safe way is planned and provided for movement of HEM /transport equipment near excavation
8. Safety helmet and shoes/gum boots are provided and worn by the workmen at excavation works
9. Dewatering arrangement is made where water seepage is prevailed.
10. Stop blocks are provided to avoid vehicles reversing into the excavated trenches
11. Danger signs /Caution boards are displayed at work spot
12. Barricading is provided at excavated pits

Soil Type	Height/Depth ratio	Slope Angle
Stable Rock	Vertical	90 deg.
Type A	¾ : 1	53 deg.
Type B	1 : 1	45 deg.
Type C	1½ : 1	34 deg.

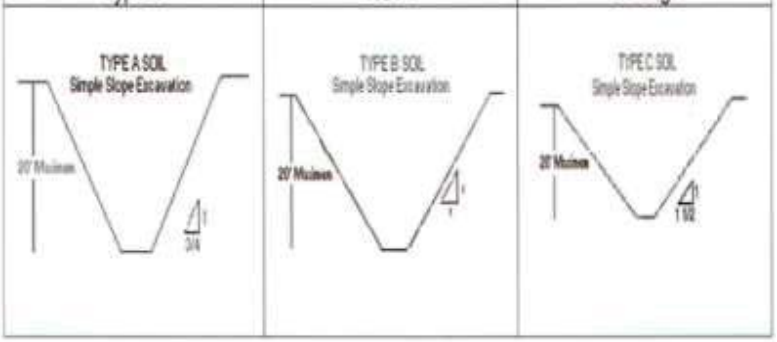

Determining Soil Type

Type	Description	Examples
A	Cohesive soils with an unconfined compressive strength of 1.5 tons per square foot or greater.	Clay, silty clay, sandy clay, clay loam and in some cases: silty clay loam and sandy clay loam.
B	Cohesive soils with unconfined compressive strength greater than 0.5 tsf but less than 1.5 tsf.	Angular gravel (similar to crushed rock), silt, silt loam, sandy loam and, in some cases silty clay loam and sandy clay loam.
C	Cohesive soils with unconfined compressive strength greater than 0.5 tsf or less.	Granular soils such as gravel, sand and loamy sand; submerged soil or soil from which water is freely seeping; submerged rock that is not stable.

Fig. 13.2.2.1 Excavation Reference

13.2.2.2 Piling

Ensure the following precautionary measures before starting piling works:

1. Inspection of piling equipment by responsible person for its condition before initiating piling operation.
2. Checklist and OCP for piling to be prepared using manufacturer's instructions and used
3. Testing and its certification wire ropes, slings, D-shackles, chain pulley blocks using in the process of piling work by competent person
4. Adequate support and secured foundation of the piling equipment to avoid toppling
5. Hoses should be lashed and adequately secured
6. Proper work platform is to be provided on piling frame
7. Safe work procedures and close supervision to prevent unsafe acts of operators/any unsafe conditions that may arise
8. Only experienced and trained operators are engaged for the piling operation
9. Provision of Personal Protective Equipment (PPE) like safety shoes/gumshoes/safety helmet/safety belt etc. and its use by their workmen.
10. Special care and precautions If work is near electrical live cables/ electrical equipment
11. Cordoning of work area to prevent un authorized entry
12. Guarding of revolving parts
13. Specific measures to prevent over turning of pile driver/missing of hammer/ hammer movement out of range

13.2.2.3 Batching

Following Safety considerations for batching plant are to be ensured:

1. Modern type batching plant should be used in which all the moving parts are protected and

emergency and safety features are incorporated.

2. Installation of external Electric moto-vibrators in the feeding hopper of all batching plants to reduce human intervention.
3. Installation of safety devices like pull-chord on both the sides of conveyor for stopping the conveyor in emergency
4. Workers carrying cement / sand to be given appropriate PPEs like respiratory masks & gloves.
5. Conveyor belt/rotating parts must be guarded properly.
6. Safety awareness shall be inculcated in workmen about the risk involved in rotating parts.
7. The agency shall ensure to erect the batching plant as per drawing including installation of all safety devices as provided by manufacturer and witnessed by BHEL Engineer in charge before starting of machine in future.
8. Safety audit to also focus on Batching plant.
9. The site shall impose penalty on the agency who has violated the safety norms as per contract.

13.2.2.4 Mobile Plant

Mobile plant includes tractors, trailers, dumpers, excavators, bulldozers, road rollers etc. for earthmoving purpose and concrete mixers, concrete transit mixtures, concrete pumps etc for concreting purpose. Due to the very nature of their function and movement in difficult terrains, congested areas, working in tandem with manual work and other operations the danger is inherent. Reverse horn is compulsory for all earth moving machineries.

Following Safety measures to be ensured for Mobile Plant:

1. Where movement around site is involved, routes should be planned, obstruction free and well maintained
2. Observe specified speed limits
3. Operating personnel should be aware of associated risks and its preventive measures
4. Only experienced, trained and authorized persons with valid license (wherever applicable) should operate the mobile equipment/vehicles
5. Provide and use Warning lights and reverse horn for cautioning the people around
6. Operation should be on level and stable ground with adequate working clearance.
7. Loading of out riggers/stabilizers should be well within safe ground bearing capacity
8. No person should be on equipment or vehicle during loading and unloading of material
9. Operators should be protected by warning barriers or switching off power when working in close proximity of overhead power lines
10. The equipment /vehicles should be well maintained and provided with effective brake system and other safety devices (wherever require)
11. Rotating parts of equipment should be adequately guarded
12. Provide necessary personal protective appliances and ensure its use by the operating personnel Ensure effective measures at source to control harmful emissions, dust, fumes contaminating atmosphere and cause health hazards to the operators and people in the vicinity.
13. No overloading/over stressing of vehicles/plant is allowed
14. Hoses, pipes, receivers, gauges and valves involved in carrying out hydraulic fluid/ compressed air should be checked for leaks and tested prior to operation.
15. Adequate safe clearance for swing and movement is to be judged during operation of Concrete mixer

16. Setting of machine on firm and level ground with wheel locked to prevent movement of machine
17. Proper instructions and Special precautions are to be ensured to prevent entry in to the danger zone of projectile of bucket while dropping bucket
18. Operator leaving work spot should ensure that the equipment/vehicle is kept in neutral position and place on firm and level ground.
19. The hand brake should be kept in position and block road wheels as additional safety measure
20. Blades/buckets should be kept low while moving
21. The dozer blades should not be used as brakes except in emergency
22. The ground should be examined for its bearing capacity and general safety especially when operating road roller at the edges of slopes, embankments.
23. The roller should not be moved downhill with the engine out of gear
24. If operating near excavations the following precautionary measures are to be ensured
25. Barricading, edge protection to prevent fall of persons/vehicles over running while reversing etc.
26. Suitable support system and adequate allowance to avoid the danger of side collapsing
27. Experienced signaler /attendant should be always accompanied with operator/driver for proper direction /signal and also to caution others in the working Zone during operation of mobile plant

13.2.2.5 Concrete Vibrators

1. Revolving parts/belt drives should be adequately guarded and Vibrating unit shall be completely enclosed and have suitable overload relays and effectively earthed
2. Ensure sufficient length of cable to the Vibrator.
3. Ensure electric starters and other accessories are firmly fixed adequately supported
4. Ensure locking of needle load while inserting needle in to the vibrator,
5. Ensure periodical lubrication and maintenance

13.2.2.6 Concrete Mixers

1. Setting of machine on firm and level ground with wheel locked to prevent movement of machine
2. Proper instructions and Special precautions are to be ensured to prevent entry in to the danger zone of projectile of bucket while dropping bucket

13.2.3 WELDING & GAS CUTTING SAFETY (HOT WORK)

1. All Hot Work shall require a Hot Work Permit
2. There shall be flash-back arrestors conforming to IS-11006 at both cylinder and burner ends. Damaged tube and regulators must be immediately replaced.
3. All safety precautions shall be taken for welding and cutting operations as per IS-818.
4. When possible, items to be welded, cut, heated, etc. shall be moved to a safe location free of combustible or flammable material. If this is not possible, then all combustibles/ flammables that can be removed from the area shall be removed within a 35-foot circumference and a positive means of confining arcs and sparks generated by the process shall be ensured and additional person(s) shall be stationed as fire-watch for the area(s)still exposed, along with obtaining the Hot Work Permit as applicable.
5. Appropriate fire-fighting equipment is to be available in close proximity of any welding and gas cutting operations at all times suitable for the type of Fire.
6. Drums, tanks, and similar containers that have contained flammable or toxic material shall not be welded, cut, or heated until they have been made safe by water filling, thorough cleansing or similar accepted practices. The container shall also be ventilated during the welding, cutting, or heating process.

7. Proper ventilation is required for any welding or torch operations performed in a confined space.
8. Any welding or gas cutting operations performed on metals of toxic compounds or coating such as zinc, stainless steel, lead, cadmium, chromium, and beryllium shall be properly ventilated and/or proper respiratory protection shall be worn by any person that could be exposed to fumes, vapors, and gasses created by the welding and gas cutting processes.
9. Wherever it is practical, all arc welding operations shall be shielded to prevent direct light rays or sparks from contacting persons in the vicinity or from reaching areas normally used to travel through or into the vicinity. Where this is not practical, persons who shall be in the area are to use proper eye and skin protection. Other persons who are not participating in the welding or gas cutting operations are not to be allowed into the hazard zone.
10. Welders and other employees who are exposed to arc welding radiation shall wear suitable clothing and protective apparel to prevent burns and other types of ultraviolet radiation damage to the skin.
11. Arc welding machines shall be shut down when being moved or when they are not in continuous use. Electrode holders left unattended shall have electrodes removed and shall not be left where they might contact employees or conducting objects.
12. Arc welding power supply cable shall be of proper rating and material, e.g. copper.
13. Welders shall guard against allowing materials adjacent to or behind them to reflect radiation back toward them or towards others in the area. Reflected radiation can cause skin burns and eye flash burns.
14. Valve caps shall be in place when cylinders are not in use. Valve caps shall never be used for lifting the cylinder vertically.
15. Torches shall only be lit by approved strikers; never with matches, cigarette lighters, or hot-work.
16. **Splatter / Slag Collector**

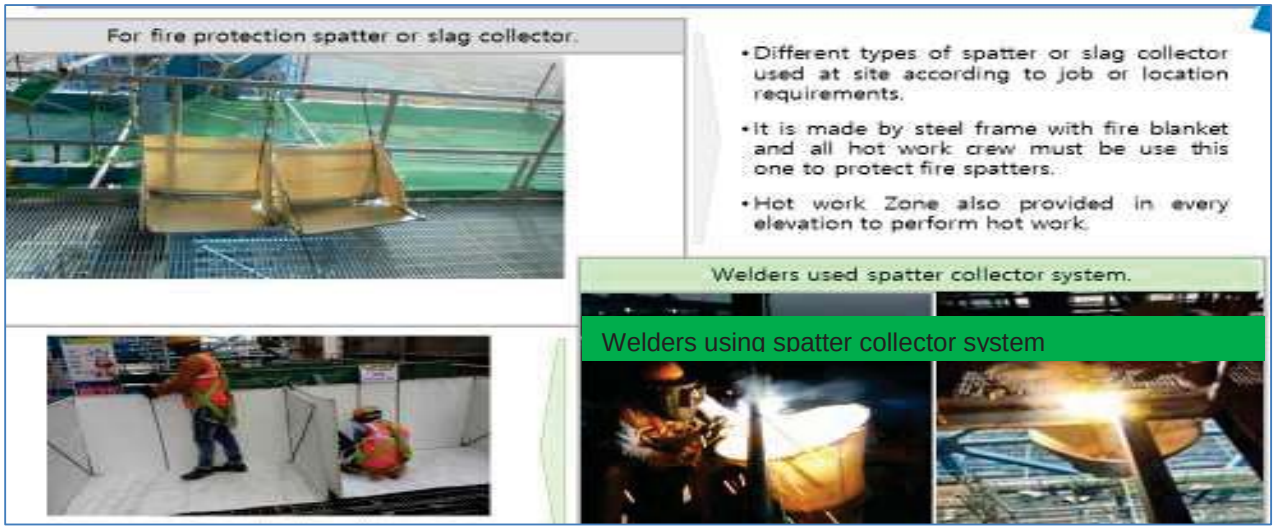

Fig. 13.2.3.1 Splatter / Slag Collector

While carrying out job at height, the sparks or molten slag shall be prevented from falling down by putting a fire-resistant (non-asbestos) sheet or patter/ slag collector or even MS Sheet. The passage of falling sparks or molten slag shall be barricaded till ground floor and any cable/ tubes/ any other objects interfering in the passages hall either be removed or covered with Fire-resistant sheet or MS Sheet.

13.2.3.1 COMPRESSED GAS

1. All cylinder valves shall be closed when any work is finished and when any Cylinders are empty or being moved. Valve protection caps shall be placed and secured properly before gas cylinders are transported, moved or stored.
1. Compressed gas cylinders shall be secured in an upright position with chain or appropriate means during storage & use. However, a trolley shall be used for transportation.
2. Compressed gas cylinders shall always be secured from tipping or falling, whether in use, in storage or in transit. The cylinders shall always be secured upright, except during times when actually being hoisted or carried.
3. When cylinders are transported by powered vehicle they shall be secured in a vertical position.
4. Regulators shall be removed when cylinders are not in use or are in transit, unless the cylinder is firmly secured on a special carrier designed for this purpose.
5. Gas cylinders are not allowed to be used in man-basket when occupied.
6. Cylinders containing oxygen or fuel gasses shall not be taken into confined spaces.
7. Oxygen cylinders shall be stored a minimum of 6 meters from fuel gas cylinders or shall have an approved firewall between them.
2. All cylinders shall be kept at a safe distance from welding or cutting operations or shielded from arc/ sparks / slag.
3. All cylinders shall be placed where they cannot become part of the electrical circuit.
4. Oxygen and acetylene shall not be stored together. Oxygen must be separated from acetylene (or ANY fuel gas) or combustible material by at least 20ft or a barrier with a 30 minute fire resistance rating.
5. All Cylinders should be stored upright in a designated area with labels for the type of gas. All applicable precautions to be ensured during storage
6. Oxygen and fuel gas regulators, hoses and associated equipment shall not be altered and shall be in proper working order while in use.
7. Compressed air can be extremely dangerous if allowed to penetrate the skin. As such, the use of compressed air to clean off yourself or other workers shall be strictly prohibited.
8. All gas cylinders shall be stored in upright position. Suitable trolley shall be used for cylinder movement, the design of which shall be submitted to BHEL Engineer for approval.
9. No of cylinders shall not exceed the specified quantity as per OCP
10. Cylinders shall be moved by tilting and rolling them on their bottom edges. They shall not be intentionally dragged, struck or permitted to strike each other violently.
11. All cylinder should be kept only in cylinder trolley.
12. Cylinder shall be transported in upright vertical position by suitable mean.

13.2.4 LIFTING & RIGGING SAFETY

1. All Heavy / Complex Lifting operations as defined in Clause 6.12 shall require a Lifting Work Permit.
2. All the cranes and lifting tools & tackles shall be inspected on daily / weekly basis as well as

monthly by expert as per applicable formats.

3. In addition, inspection / certification as mandated by law shall be carried out wherein these shall be tested and certificates of fitness shall be obtained from 3rd party State Govt. approved competent agency before deploying at site and later periodically. BHEL shall be given advance intimation of any such inspections
4. The last date of Third Party Inspection and the next Due date shall be conspicuously displayed on all cranes. A copy of certificate shall be pasted on operator's cabin of all the lifting equipment.
5. Following requirements shall be mandatorily followed, wherever applicable:
   a. The manufacturer's instruction for maintenance shall also be followed. All safety measures shall be followed.
   b. All tools tackles, lifting appliances; material-handling equipment etc. used by the subcontractor shall be of safe design and construction.
   c. The operators, slingers and signalers shall be qualified as per IS 13367 (part-1):2003 "Safe use of cranes- code of practices".
   d. There shall be a person responsible for co-ordination among cranes where multiple cranes are used, and lifting over 75% of the crane capacity to be avoided.
   e. Mobile phone should be banned for crane operator and lifting operation. Only walki talki shall be allowed in rigging/Lifting purpose.

13.2.4.1 Personnel Lifts (Man-Basket / Jhoola):

The design of personnel man basket shall be submitted to BHEL Engineer for approval before use. Relevant permit (Height work & others as applicable) shall be completed prior to lifting any people, along with a rigging plan.

a. A separate Lifeline / Fall arrestor anchored to a fixed structure outside of Jhoola shall be provided for the workers inside the basket. All occupants of the basket shall have Safety Harnesses equipped with rope grabs, which are to be hooked to the vertical lifeline.
b. Man-basket shall be used where access through ladders or scaffolding is not feasible.
c. Man-baskets shall be designed and engineered by a manufacturer (job made man-baskets are not allowed, unless designed and tested by a certified engineer), and built robust with MS Angles and flats or plates or channels only.
d. Guard rails top and mid, must be in place and screened-in to avoid material from falling out of basket. The factor of safety shall be 200%.
e. It shall have a door with double latches and shall open inside. Anchor points shall be identified within the man-basket.
f. The man-basket shall be thoroughly inspected and load tested and a trial run performed without personnel before being put to job.
g. It shall be treated as a lifting tool (T&P Item) and shall undergo same certification cycle and inspection as other lifting equipment.
h. An additional sling of required lifting capacity shall be fixed the man-basket main lifting point and attached to the crane above the ball or block.

i. While lifting man-basket, the crane shall maintain a uniform speed of lift without any swing.
j. Once man-basket reaches the destination, the lift brakes shall be locked as long as the basket remains at that point. The same care shall be taken in its descent.
k. As for hanging man-basket, the same shall be hung off a rigid structure with help U-shaped handle welded to man-basket. This shall be tested once in a year by a competent person.
l. Use of Rebar steel for making and monkey-ladder must be avoided.

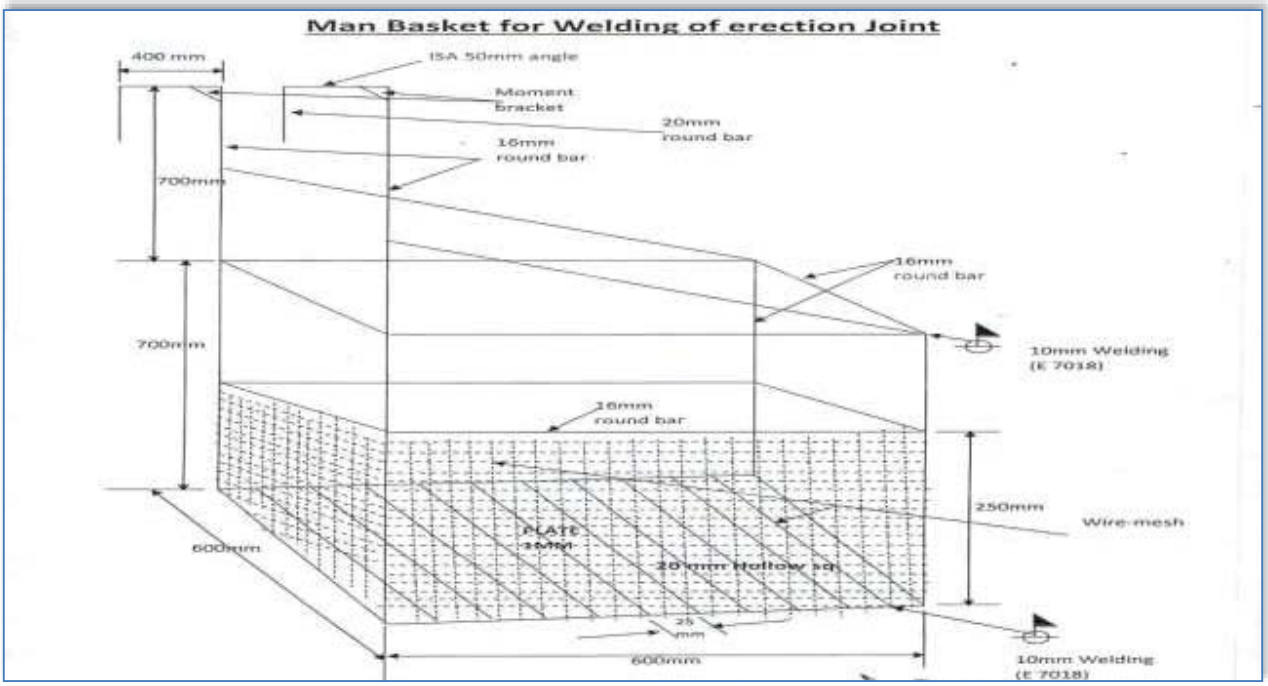

Fig. 13.2.4.1 Man Basket for Welding Erection Joint

13.2.4.2 **Cranes & Hoisting Equipment:**

This section provides the guidelines to ensure proper rigging and lifting activities are accomplished safely and in accordance with applicable specifications, codes, and regulations.

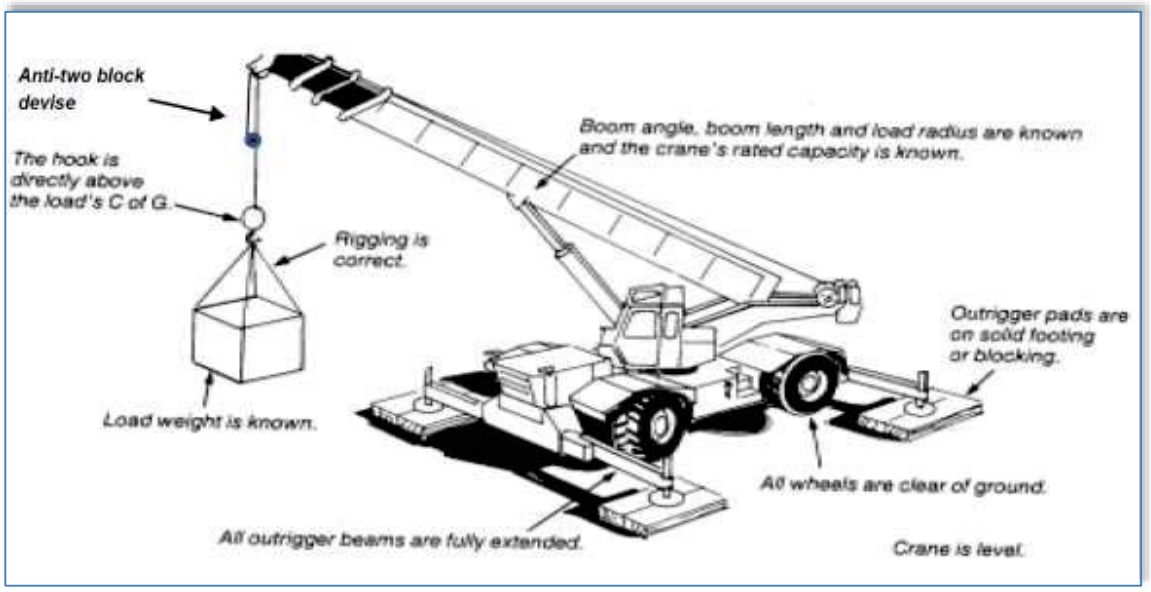

Fig. 13.2.4.2 Proper Crane Setup

a. On every crane or piece of hoisting equipment notices of all rated load capacities, recommended operating speeds, and any hazard warnings or special instructions shall be conspicuously posted. All instructions and warning shall be visible from the equipment operator ‘s station.
b. Cranes shall have an Anti-Two-block safety device installed
c. All mobile cranes shall have overload and backup alarms, load angle indicators and limit switches
d. All areas within swing radius of cranes that are potentially accessible by pedestrian, vehicular, or equipment movement shall be barricaded to prevent anyone or any vehicle or equipment from being struck by the crane or hoisting equipment, or its load(s).
e. No part of the lifting equipment or its load shall be within the distance as specified in the Indian Electricity Act from an energized power line
f. Cranes shall have annual certified third party inspection and be inspected before use by the operator. Any defects shall be corrected before use. Logs of crane inspection shall be kept with the crane.
g. Make certain that the rigging personnel, material, and equipment have the necessary capabilities for the job and are in safe condition.
h. Communicate with person(s) directly responsible for accomplishing the work and / or work area to establish requirements/responsibilities and make certain that all preparatory work is complete.
i. Mats/Pads must be used on all lifting equipment, equipped with out riggers.
j. Pick and carry must have the load secured to the rig in front.
k. Only BHEL Approved Plate Lifting Spreader Beam configuration shall be used (Sample in Fig. 13.2.4.2)

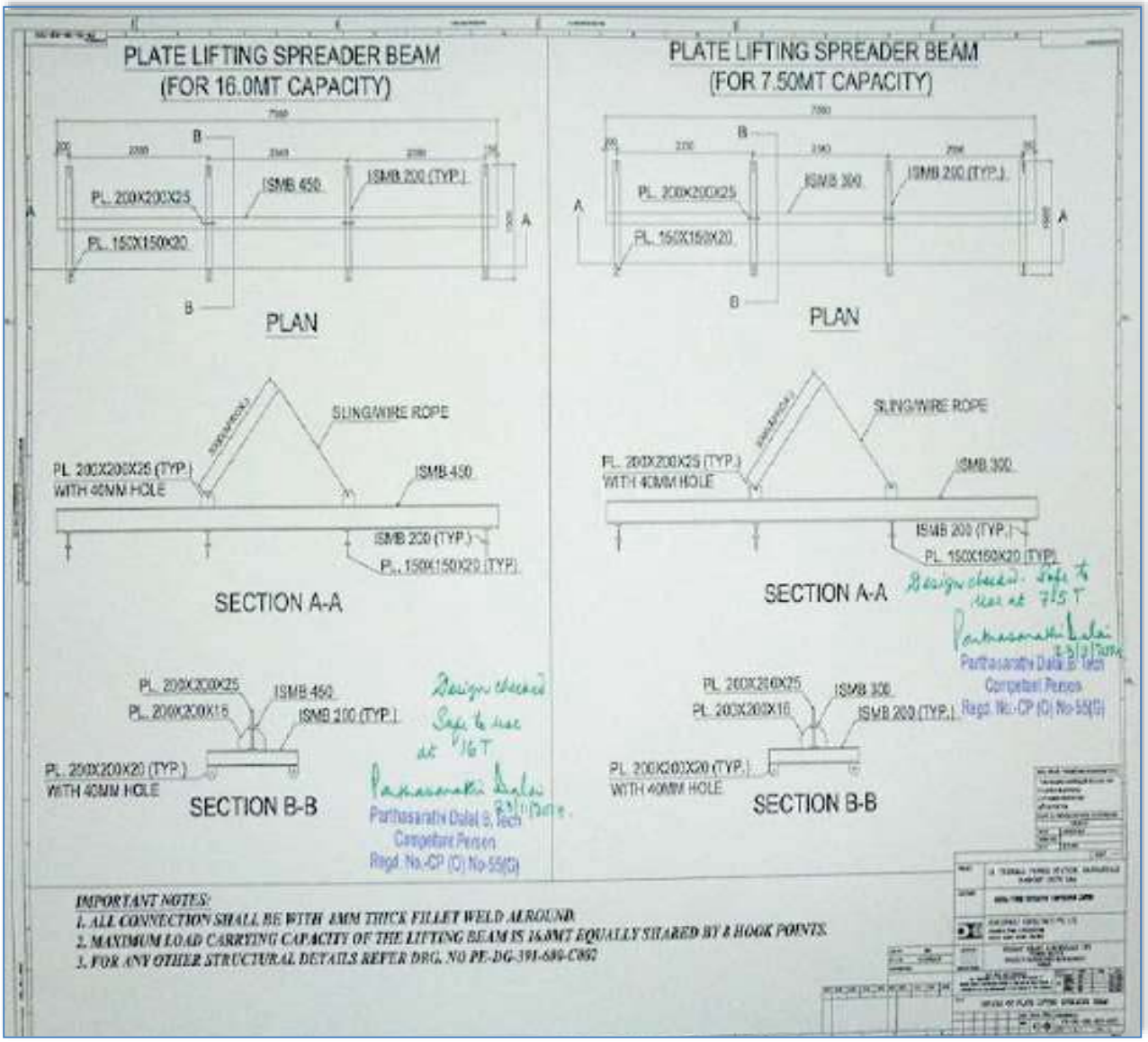

Fig. 13.2.4.3 Typical Plate Lifting Spreader Beam Configuration for 7.5 MT and 15 MT Loads

I. Crane operators must follow the following:

1. Pass an annual Operator's Physical examination
2. Carry a valid training certification card at all time while operating issued by the Govt. or other recognized institute.

13.2.4.3 SAFE RIGGING PRACTICES

13.2.4.4

a. Review the planned operation and requirements with the operator and rigging crew.
b. Ensure a pre-lift meeting is conducted with crane operator, tagline operator, signal personnel, and Safety Manager.
c. Designate a qualified person from the rigging crew to observe clearance of the equipment and give timely warning for all operations where it is difficult for the operator to maintain the desire clearance by visual means.
d. Clear the lift area of all unnecessary personnel.
e. Hydras shall only be allowed for loading & unloading works & shall not be allowed to move with load

13.2.4.4.1 RULES FOR SAFE RIGGING

1. Use loops, thimbles and corner pads to prevent damage to slings when used around corners or on cutting edges.
2. Never allow wire rope to lie on the ground for any length of time or on rusty steel or near solvents, chemicals or corrosive substances.
3. Slings must not be pulled from between or under loads with load resting on the sling.
4. Keep all rope away from flame cutting or welding operations.
5. Never use rope as sling material.
6. Never wrap a wire rope completely around a hook.
7. Do not bend wire rope near any attached fitting.
8. The sling must be selected to suite the most heavily loaded leg rather than the total weight when using multi-legged sling to lift loads in which one end is heavier than the other.
9. When using 3 and 4 legged sling configurations, any two legs must be capable of supporting the entire load.
10. Where possible, wire rope choker hitches must include a shackle with the eye around the shackle pin to prevent breaking wires of the choke. The choker hitch must be “snugged down” prior to lifting, not after tension is applied.
11. Unless authorized by the hook manufacturer when more than two rope eyes are placed over a hook, install a shackle, pin resting in the hook, and place the rope eyes in the bowl of the shackle.
12. Properly rig all loads to prevent dislodgment of any part.
13. Use guide ropes or tag lines to prevent the rotation or uncontrolled motion of the load when necessary.
14. Loads must be safely landed and properly blocked before being unhooked and unslung. Tag lines must not be used in situations that jeopardize the safety of the lift.
15. Lifting beams must be plainly marked with their weight and designed working load and must only be used in the manner for which they were designed.

16. The hoist rope or chain must never be wrapped around the load. The load must be attached to the hook by slings or other rigging devices that are adequate for the load being lifted.
17. Multiple part lines must not be twisted around each other.
18. The hook must be brought over the center of gravity of load before the lift is started.
19. If there has been a slack rope condition, determine that the rope is properly seated on the drum and in the sheaves prior to lifting.
20. Keep hands away from pinch points as the slack is being taken up.
21. Leather gloves are recommended when handling wire rope.
22. Avoid impact loading caused by sudden jerking when lifting or lowering. Lift the load gradually until the slack is eliminated.
23. Never ride on a load that is suspended.
24. Avoid allowing the load to be carried over the heads of any personnel.
25. Never work under a suspended load until the load has been adequately supported from the floor and all conditions have been approved by the supervisor in charge of the operation.
26. Never leave a load suspended unless emergency evacuation is required.
27. Never make temporary repairs to sling.
28. The capacity of a sling is determined by its angle, construction, type of hitch and size.
29. Never lift loads with one leg of a multi-leg sling until the unused legs are made secure.
30. Never point load a hook unless it is especially designed and rated for such use.
31. Make certain that the load is broken free before lifting and that all legs are taking the load.
32. When using two or more slings on a load make certain all slings are made from the same materials.
33. Lower the loads on to adequate blocking to prevent damage to the slings.
34. Materials and equipment being hoisted must be loaded and secured to prevent any movement which could create a hazard in transit.
35. The weight of the hook, load block and any material handling devices must be included when determining crane capacity.
36. Calculated weights cannot exceed 75% of the chart without written approval.
37. Personnel must be completely clear of loads being picked up or set down by crane. Tag lines will be used to control the loads. Loads must not be touched by hand while placing/ moving.

13.2.4.4.2 SLINGS

a. Synthetic Slings

The following are rules for safe use of synthetic slings:

i. Synthetic slings must be marked to show the rated capacity for each type of hitch and type of web material.
ii. Nylon web slings must not be used where fumes, vapors, sprays or mists or liquids of acids or phenolic are present. Web slings with aluminum fittings must apply in this category.
iii. Synthetic web slings must be removed from service and destroyed if any of the following conditions are present:

a. Acid or caustic burns
b. Melting or charring of any part of the sling surface
c. Snags, punctures, tears or cuts
d. Broken stitches
e. Distortion of fittings
f. Synthetic web slings of polyester or nylon must not be used at or come in contact with temperatures in excess of 82°C
g. Polypropylene web slings must not be used at or come in contact with temperatures in excess of 93°C
h. Insulated hooks must be tested yearly to insure insulation integrity to at least manufacturer's specifications.

iv. Wire Rope Slings must be removed from service and destroyed if any of the following conditions are present:

a. In (10) randomly distributed wires broken in one (1) rope lay, or five (5) broken wires in one (1) strand in one (1) rope lay.
b. Wear or scraping of one-third the original diameter of outside wires.
c. Kinking, crushing, bird caging or any other damage resulting in distortion of the wire rope structure such as:
d. Evidence of heat damage.
e. End attachments that are cracked, deformed worn.
f. Corrosion of the rope or end attachments.

v. Metal mesh slings must be immediately removed from service if any of the following conditions are present:

a. A broken weld or broken brazed joint along the sling edge.
b. Reduction in wire diameter of 25 percent due to abrasion or 15 percent due to corrosion.
c. Lack of flexibility due to distortion or corrosion.

vi. Synthetic web slings must be removed from service and destroyed if any of the following conditions are present:

a. Acid or caustic burns
b. Melting or charring of any part of the sling service
c. Snags, punctures, tears or cuts
d. Broken stitches
e. Distortion of fittings

vii. Requirements of Plate Clamps:

1. The rated load of the plate clamp must be marked on the main structure.
2. Care must be taken to make certain the load is correctly distributed for the plate clamp being used.
3. Do not allow load or plate clamp to come into contact with any obstruction.
4. The plate clamp must not be used for side pulls or sliding the load.
5. When lifting stainless steel or special alloys, ensure plate clamp is designed for use on

the specific metal.

13.2.4.4.3 SIGNALING PRACTICES:

- The "slinger" is responsible for attaching and detaching the load to and from the crane. He shall:
  - have received appropriate training on general safe lifting operations;
  - be capable of selectings lifting gears suitable for the loads;
  - liaise with the operator and direct the movement of the crane safely.
- The "signaller" is responsible for relaying the signal from the slinger to the crane operator. He shall:
  - have received appropriate training on general safe lifting operations;
  - be able to direct the movement of the crane and loads.

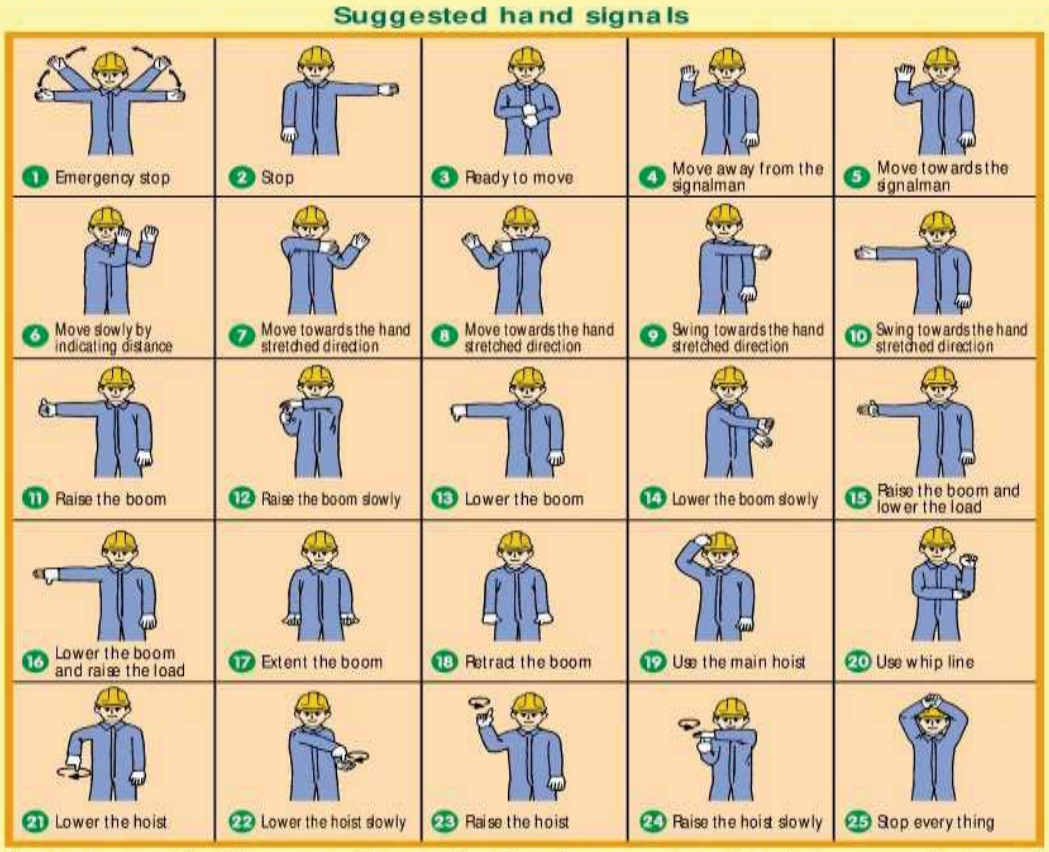

Note: During the lifting operation, either the slinger or signaller shall communicate with the operator. Other communication methods (e.g., wireless walkie-talkies, telephones, etc.) may also be used.

Fig. 13.2.4.4 Recommended Signalling Practices

13.2.5 DEMOLITION WORK

Before any demolition work is commenced and also during the process of the work the following shall be ensured, besides using the Work Permit:

1. All roads and open areas adjacent to the work site shall either be closed, suitably protected or restricted for movement
2. No electric cable or apparatus which is liable to be a source of danger nor a cable or an apparatus used by the operator shall remain electrically charged.
3. All practical steps shall be taken to prevent danger to persons employed from the risks of fire or explosion or flooding. No floor, roof or other part of the building shall be so overloaded with debris or materials as to render them unsafe.

13.2.6 T&Ps General

1. All T&Ps/ MMEs should be of reputed brand/appropriate quality & must have valid test /calibration certificates bearing endorsement from competent authority of BHEL.

2. Subcontractor to also submit monthly reports of T&Ps deployed and validity test certificates to BHEL safety Officer as per the format/procedure of BHEL.

3. Tagging and punching in all lifting tool is compulsory with SWL, sr. no. and due date.

4. All T&Ps shall be inspected by authorized Third Party agency as per applicable frequency. BHEL shall be kept informed of any such scheduled inspection

5. All T&Ps shall be internally inspected in each quarter and colour coded as below.

13.2.6.1 T&P Color Coding Procedure:

Inspections and tests shall be documented by means of color coding which shall verify that inspections or testing are current and that all receptacles, portable Power tools, Lifting Tools & Tackles have been inspected and tested as required. The color codes used on the project shall be:

GREEN	BLUE	YELLOW	RED
January February March	April May June	July August September	October November December

Table. 13.2.6.1 T&P Color Coding Procedure

i. The cycle of colors shall be Quarterly as a minimum or as decided by BHEL. The color code tape / Sticker shall be clearly visible to designate the period for which the inspections and tests were conducted.

ii. Following the initial inspection, the equipment must be color-coded quarterly as per color-coding instructions that will be issued by the subcontractor.

iii. Fire extinguisher with the current month color-coding inspection sticker must be provided and secured in the platform.

iv. All slings shall be regularly inspected in accordance with the requirement of the project for frequent and periodic inspections and discard immediately if they fail to meet the minimum requirements of the project.

v. The Subcontractor's Safety Officer shall ensure that all PPE is inspected prior to its issue. He is to ensure all subcontractor personnel are using safe and proper PPE equipment. Regular inspections on the PPE shall be carried out and personnel not adhering to those inspections shall be removed immediately from the site.

vi. A five (10) day interval period shall be given into each monthly color code change. During this five (10) day period either color shall be acceptable.

13.2.7 CHEMICAL HANDLING

1. Displaying safe handling procedures & MSDS for all chemicals such as lube oil, acid, alkali, sealing compounds etc, at work place.
2. Where it is necessary to provide and/or store petroleum products or petroleum mixture & explosives, the subcontractor shall be responsible for carrying out such provision / storage in accordance with the rules & regulations laid down in the relevant petroleum act, explosive act and petroleum and carbide of calcium manual, published by the chief inspector of explosives of India. All such storage shall have prior approval if necessary from the chief inspector of explosives or any other statutory authority. The subcontractor shall be responsible for obtaining the same.
3. The used containers of chemicals shall be segregated and disposed off suitably
4. In case the used containers need to be re-used, all traces of the chemical to be removed by thorough cleaning with detergents etc. under trained supervision

13.2.8 ELECTRICAL SAFETY

1. Only electricians licensed by appropriate statutory authority shall be employed by the subcontractor to carry out all types of electrical works. The subcontractor shall maintain adequate number of qualified electricians to maintain his temporary electrical installations.
2. Power supply to all equipment at site to be routed through MCBs of appropriate rating. A 'Power Supply Distribution Plan' shall be prepared and submitted to BHEL Engineer for approval

3. All power supplies through cables shall be underground or overhead with height > 3mtrs.
4. All distribution boxes shall be locked and the key controlled by site management of concerned subcontractor.
5. All individual equipment & tools at site shall be powered through Earth Leakage Circuit Breakers of 30 mA sensitivity.
6. These MCBs and ELCBs shall be regularly tested as per Clause 14
7. All fuses and fuse wires shall be of standard size and rating.
8. All electrical appliances used in the work shall be in good working condition and shall be properly double earthed other that armour earthling.
9. All extension boards shall have separate switches for all sockets / connections
10. All portable electric tools used by the subcontractor shall have safe plugging system to source of power and be appropriately earthed.
11. Providing adequate no. of 24 V sources and ensure that no hand lamps are operating at voltage level above 24 Volts especially in confined spaces like inside water boxes, turbine casings, condensers etc.
12. Electrical appliance shall have proper earthing and for appliances equal to & more than 415V shall have two separate earthing (as per IS-3043-1987)
13. Details of earth resource ad their test date to be given to BHEL safety officer as per the prescribed formats of BHEL
14. The subcontractor shall use only properly insulated and armoured cables and conform to the requirement of Indian Electricity Act and Rules for all wiring, electrical applications at site.
15. BHEL reserves the right to replace any unsafe electrical installations, wiring, cabling etc. at the risk & cost of the subcontractor.
16. No maintenance work shall be carried out on live equipment
17. Adequate precautions shall be taken to prevent danger for electrical equipment. No materials on any of the sites of work shall be so stacked or placed as to cause danger or inconvenience to any person or the public
18. The subcontractor shall carefully follow the safety requirement of BHEL/ the purchaser with the regard to voltages used in critical areas.
19. Wiring and Branch Circuits Must be protected by a proper amperage over-current device such as a HRC fuse or circuit breaker. Such installations must be located so as to prevent physical damage to the wire conductors & panels.

20. Portable Electric Lights

a. Portable electric lights used in wet or potentially wet locations must be either low voltage type (24 volts or less) or protected by a GFI (ground fault interrupter).
b. They must be visually checked before each use and periodically while in use to assure their original integrity is maintained.
c. Cords with cuts, breaks, deep abrasions, etc. shall be taken out of service immediately.
d. Repairs to extension cords shall only be performed by qualified/ licensed electricians.
e. Must not be allowed to lie in wet or potentially wet areas.

21. Underground Cables:

a. Every electric line or cable of unknown origin that is discovered or exposed during a digging, drilling, probing, or similar operation is to be considered as energized and life threatening.
b. The senior company employee on the site will ensure that all necessary safety precautions are taken in order to isolate the line from all workers and the public.
c. Such precautions may include halting the operation if appropriate.
d. The senior company employee on the site is to then contact the proper authorities to have the line identified and either confirmed to be abandoned and/or made safe for continuing the work.
e. Any and all underground lines that are discovered or become severed must be considered energized on both sides, and be treated accordingly.

22. In general, equipment or machinery being moved or transported must maintain minimum clearances of 25 ft. to all power lines.
23. TAG IN/ TAG OUT must be in force in Switch Room and all Distribution Boxes for live power line. The authorized person's name and contact no shall be displayed
24. Ensure "double insulated" three - core cables and three pin connectors are used and are properly ground "all insulated" types, all electrical tools and appliances must be manufactured for industrial use.
25. All connections shall be electrically and mechanically sound and properly insulated. Taped joints are not permitted. Connections to socket outlets must be made with proper plugs.
26. Splices in electrical cords are not permitted. Repairs must be made at the socket connection and retain the same mechanical and dielectric condition of the original connection.
27. Damaged or defective electric tools, equipment and extension cords, etc. must not be used and shall be tagged out of service, removed from the work area and taken back to stores.
28. Only licensed electricians are authorized to repair and work on electrical equipment. Tampering with electric tools or equipment by others could result in termination.
29. Temporary electric cabling should be elevated 2.2 meters above the floor/ground or covered for protection. It must be kept clear of walkways and other locations where it may be exposed to damage or create a tripping hazard.
30. Energized wiring in junction boxes, circuit breaker panels and similar places must be covered and locked at all times.
31. Areas with live high voltage wires or terminals must be barricaded against entry and warning signs posted Danger – High Voltage and Authorized Personnel Only.
32. Personnel should never work on energized equipment, de-energizing (lockout/tag out) the equipment is always the first requirement.
33. The lockout and tag out procedure will be used when testing or working on, or around, energized installation.
34. Working around energized equipment should never be done alone. A second electrician must always be available for assistance.

35. If lockout/tag out of the work is infeasible (must be demonstrated), work on energized electrical circuits must be approved by the Site In-charge. All safety precautions necessary must be taken, PPE use must be evaluated per the exposure and used, i.e high/low voltage gloves, insulated shoes, overcoats/aprons, face shields, and other protective equipment like insulated tools, blankets, mats, etc. must be used.
36. The welding machines earth leads shall be properly fixed without loose contacts. The earth cable only has to be used. No steel members shall be used as earth leads.
37. Electrical crews must be qualified for the equipment and tools they work on, including being trained in Cardio-Pulmonary Resuscitation (CPR) methods and First Aid for rendering help in the event of electric shock.

38. Qualified Persons for Electrical Works

One who is trained and wiremen licensed to Govt of State and familiar with the construction, operation and safety hazards of the equipment upon which they are permitted to work.

i. Qualified persons are intended to be only those who are well acquainted/experienced with and thoroughly conversant in the electric equipment and electrical hazards involved with work being performed.
ii. Only qualified persons may be permitted to work on or near exposed energized parts. Such persons are required to have been trained in three specific areas:
iii. Qualified persons must be capable of working safely on energized circuits;
iv. Must be familiar with the proper use of special precautionary techniques and procedures bases on equipment and exposure; and
v. Must be familiar with required personal protective equipment, insulating and shielding materials, and insulated tools.
vi. Qualified persons are expected to be able to evaluate unknown situations and adjust their activities in such a way that only safe work practices are used. Such behavior is the responsibility of the qualified person.
vii. It is possible and likely for an individual to be 'qualified' with regard to certain equipment in the work place, and unqualified on other equipment they must know their limitation and stop work if not qualified on what equipment they were to work on.
viii. An employee who is undergoing on-the-job training, who, in the course of such training, has demonstrated an ability to perform duties safely at his or her level of training, and who is under the direct supervision of a qualified person is considered to be a qualified person for the performance of those duties. The process must be documented as proof.

13.2.9 USE OF HAND TOOLS AND POWER-OPERATED TOOLS

13.2.9.1 General Provisions

a. All hands and power tools and similar equipment, shall be maintained in safe condition.
b. When power operated tools are designed to accommodate guards, they shall be equipped
c. with such guards, when in use;
d. Belts, gears, shafts, pulleys, sprockets, spindles, drums, fly wheels, chains and other reciprocating, rotating or moving parts of the equipment shall be similarly guarded;
e. Personnel using hand and power tools and exposed to the hazard of falling, flying, abrasive, and splashing objects, or exposed to harmful dusts, fumes, mists, vapors, or gases shall be

provided with the particular personal protective equipment necessary to protect them from the hazards;

f. All hand-held powered platen sanders, grinders, grinders with wheels of 5 cm or less, routers, planers, laminate trimmers, nibblers, shears, scroll saws and jigsaws with blade shanks of 0.5 cm wide or less shall be equipped with only a positive on-off control.
g. All hand-held powered drills, tappers, fastener drivers, horizontal, vertical or angle grinders with wheels greater than 5 cm in diameter, disc sanders, belt sanders, reciprocating saws, saber saws and other operating powered tools shall be equipped with a momentary contact on control provided that turnoff can be accomplished by a single motion of the same finger or fingers that turn it on.

13.2.9.2 Hand Tools

a. The subcontractor shall not issue or permit the use of unsafe hand tools;
b. Wrenches including adjustable pipe end and socket wrenches shall not be used when saws are sprung to the point that slippage occurs;
c. Impact tools such as drift pins, wedges and chisels shall be kept free of mushroomed heads;
d. The wooden handles of tools shall be kept free of splinters or cracks and shall be kept tight on the tools.

13.2.9.3 Power Operated Tools

a. Electric power operated tools shall be either of the approved double-insulated type or shall be grounded;
b. The use of electric cords for hoisting or lowering loads shall not be permitted;
c. Pneumatic power tools shall be secured to the hose or whip by some positive means to prevent the tool from becoming incidentally disconnected;
d. Safety clips or retainers shall be securely installed or maintained on pneumatic impact (percussion) tools to prevent attachments from being incidentally expelled;
e. All pneumatically riveting machine staplers and other similar equipment provided with automatic fastener feed, which operate at more than 7 kg/cm2 pressure at the tool a safety device on the muzzle to prevent the tool from ejecting the fasteners unless the muzzle is in contact with the work surface;
f. Compressed air shall not be used for cleaning purposes except when the pressure is reduced to less than 2 kg/cm2 and that too with effective chip guarding. The 2 kg/cm2 pressure requirement does not apply to concrete form, mill scale and similar cleaning purposes;
g. The manufacturer's safe operating for hoses, pipes, valves, filters and other fittings shall not be exceeded;
h. Only personnel who has been trained in the operation of the particular tool shall be allowed to operate power-actuated tools;
i. The tool shall be tested each day before loading to see that the safety devices are in proper working condition. The method of testing shall be accordance with the manufacturer's

recommended procedure;

j. Any tool found not in proper working order, or that which develops a defect during use, shall be immediately removed from service and not used until properly repaired;
k. Tools shall not be loaded until just prior to the intended firing time. Neither loaded nor empty tools are to be pointed at any other person. Hands shall be kept clear of the open barrel end;
l. Loaded tools shall not be left unattended;
m. Fasteners shall not be driven into very hard or brittle materials including, but not limited to, cast iron, glazed tiles, surface hardened steel, glass block, live rock, face brick or hollow tiles;
n. Driving into materials that can be easily penetrated shall be avoided unless backed by a
o. substance that will prevent the pin or fastener from passing completely through and creating a flying missile hazard on the other side;
p. No fastener shall be driven into a palled area caused by an unsatisfactory fastening;
q. Only non-sparking tools shall be used in an explosive or flammable atmosphere;
r. All tools shall be used with the correct shield, guard or attachment as recommended by the manufacturer.

13.2.9.4 Abrasive Wheels and Tools

a. All grinding wheel must be ISO certified only.
b. All grinding machines shall be supplied with sufficient power to maintain the spindle speed at safe levels under all conditions of normal operation;
c. Grinding machines shall be equipped with suitable safety guards;
d. The maximum angular exposure of the grinding wheel periphery and sides shall not be more than 900, except that when the work requires contact with the wheel below the horizontal plane of the spindle, the angular exposure shall not exceed 1200. In either case, the exposure shall begin not more than 8.650 above the horizontal plane of the spindle. Safety guards shall be strong enough to withstand the bursting of the wheel;
e. Floor and bench-mounted grinders shall be work-rests, which shall be rigidly supported and readily adjustable. Such work-rests shall be kept at a distance not to exceed 5 mm from the surface of the wheel;
f. Cup type wheels used for external grinding shall be protected by either revolving cup guard or a band type guard;
g. When safety guards are required, they shall be mounted as to maintain proper alignment with the wheel and the guard and the guard and its fastening shall be adequate strength to retain the fragments of the wheel in case of incidental breakage. The maximum angular exposure of the grinding wheel periphery and sides shall not exceed 1800;
h. Portable abrasive wheel used for internal grinding shall be provided with suitable safety flanges;
i. When safety flanges are required, they shall be used only with wheels designed to fit the flanges. Only safety flanges, of a type and design and properly assembled so as to ensure that the pieces of the wheel will be retained in case of incidental breakage, shall be used;
j. All abrasive wheels shall be closely inspected and ring tested before mounting to ensure that

they are free from cracks or defects;

k. Grinding wheels shall fit freely on the spindle and shall not be forced on. The spindle nut shall be tightened only enough to hold the wheel in place;
l. All employees using abrasive wheels shall be protected by suitable eye protection equipment.

13.2.9.5 Wood Working Tools

a. All fixed power driven woodworking tools shall be provided with a disconnect switch that can either be locked or tagged in the off-position;
b. The operating speed shall be attached or otherwise permanently marked on all circular saws over 0.5 m in diameter or operating at over 3000 peripheral rpm. Any saw so marked shall not be operated at a speed other than that marked on the blade. When a marked saw is re-tensioned for a different speed, the marking shall be corrected to show the new speed;
c. Automatic feeding devices shall be installed on machines wherever the nature of the work will permit. Feeder attachments shall have the feed rolls or other moving parts covered or guarded so as to protect the operator from hazardous points;
d. All portable power driven circular saws shall be equipped with guards above and below the base plate or shoe. The upper guard shall cover the saw to the depth of the teeth, except for the minimum arc required to permit the base to be tilted for bevel cuts. The lower guard shall cover the saw to the depth of the teeth, except for the minimum arc required to allow proper retraction and contact with the work. When the tool is withdrawn from the work, the lower guard shall automatically and instantly return to the covering position.

13.2.10 START UP, COMMISSIONING AND TESTING:

There are various activities involved prior to commissioning- the major ones are -Hydraulic Test, Steam Blowing, Transformers Charging, Boiler Light Up, Rolling and Synchronisation and Full loading of unit.

a. These activities shall be personally supervised by the site executive along with the commissioning engineer.
b. Appropriate Work Permits shall be taken as applicable
c. The readiness of upstream and downstream system shall be ensured before taking up.
d. These shall be handled strictly by the authorized persons only and the team shall be suitably briefed about the activity including hazards & risks involved and control plan by the concerned executive-in-charge before start.
e. Entry of persons to the area of activity shall be suitably restricted and the emergency functions like Ambulance, first aid center and Fire station shall be intimated about the plan well in advance.
f. Tag-in/ Tag-out shall be in place while charging transformer and whenever necessary.
g. Electricians with valid wiremen license only shall be permitted to work on power lines.
h. The area and the passage shall be adequately illuminated.

13.2.11 FIRE SAFETY

Numbers and types of Fire Extinguishers shall be ensured as follows:

Sl. No	Type of Fire Risk (Class of Fire)	Extinguishing Medium & Relevant Indian Standard	Scale of Equipment (Minimum recommended)
1.	**CLASS 'A'** Fires involving ordinary combustible materials like wood, paper, textiles, rubber etc. (Ordinary hazard or low fire load)	WATER Soda acid type, water type (gas pressure) and water type (constant air pressure) IS: 934 -1976; IS: 940 -1976; IS: 6234 -1971	For every 600 square meter floor area or part, one 9-litre capacity. Minimum 4 numbers per floor or room; should not be required to travel more than 15 meter to reach any extinguisher.
2.	**CLASS 'A'** (Extra hazard & high fire load)	-do	-do – (Also, consult local fire authority).
3.	**CLASS 'A'** (Special hazards)	-do	-do – Extra provision For every 100 square meter floor area or part, one 4.5 Kg. CO2; minimum 2 numbers per room; should not be required to travel more than 10 meter to reach any extinguisher.
4.	**CLASS 'B'** (Fires in flammable liquids like oils, solvents, petroleum, products, varnishes, paints, etc. where blanketing effect is essential) (Storage and handling in small quantities)	FOAM / CARBON DIOXIDE / DRY CHEMICAL POWDER IS: 933 -1976; IS: 2878 1976; IS: 2171 1976; IS: 4308 -1982	For every 50 square meter floor area or part, 2 numbers 9 -liters foam or 5 kg dry powder; should not be required to travel more than 10 m in the area of storage to reach any extinguisher.
5.	**CLASS 'B'** (Bulk storage other than in tank form)	-do -	-do- (but minimum 3 numbers per room)
6.	**CLASS 'C'** (Fires involving gaseous substances under pressure where it is necessary to dilute the burning gas at a very fast rate with an inert gas or powder) (locations of storage and handling of gas cylinders)	CARBON DIOXIDE / DRY CHEM. POWDER. The best way to extinguish such fire is by stopping the flow of fuel gas to the fire. Container is kept cool with water spray. IS: 2878 1976; IS: 2171 -1976; IS: 4308 -1982	For every 100 square meter floor area or part; 2 numbers, 10 kg powder extinguisher or 6 kg C02; minimum 3 nos. per room; should not be required to travel more than 10 meter to reach any extinguisher.
7.	**CLASS 'D'** Fires involving metals like magnesium, aluminum, zinc, potassium etc. where the burning metal is reactive to water and which require special extinguishing media or technique	SPECIAL DAY POWDER IS: 2171 -1976 IS: 4861 -1968	For every 50 square meter floor area or part, 2 nos. 5 kg special dry powder; minimum 3 nos. per room; should not be required to travel more than 10 meter to reach any extinguisher.
8.	**MIXED OCCUPANCY** (electrical); Generators; Transformers; etc.	CARBON DIOXIDE DRY POWDER, IS: 2878 -1976; IS: 2171 -1976	For every 100 square meter floor area or part one 10 kg C02. Minimum 2 numbers for every location should not be required to travel more than 10 meter to reach an extinguisher.
Note: Due to peculiarities of the power plant construction sites, there would be locations in the construction areas of Boiler, Turbine, Generator, Transformer, etc. where different types of fire risk (classes of fire) may co-exist. Special			

care shall be taken while selecting and installing portable fire extinguishers for such locations so that all types of fire risk that may co-exist, are adequately covered. Similar special care shall be taken for storage areas.

1. All Electrical welding booths shall be equipped with appropriate Fire Extinguisher
2. Appropriate Fire Extinguishers shall be made within easy reach of all welding operations
3. Fire extinguishers shall be regularly tested and last checked date to be indicated on each.
4. Providing appropriate firefighting equipment at designated work place and nominate a fire officer/warden adequately trained for his job.
5. Subcontractor shall provide enough fire protecting equipment of the types and numbers at his office, stores, temporary structure in labour colony etc. Such fire protection equipment shall be easy and kept open at all times.
6. The fire extinguishers shall be properly refilled and kept ready which should be certified at periodic intervals. The date of changing should be marked on the Cylinders.
7. All other fire safety measures as laid down in the “codes for fire safety at construction site” issued by safety coordinator of BHEL shall be followed.
8. Non-compliance of the above requirement under fire protection shall in no way relieve the subcontractor of any of his responsibility and liabilities to fire incident occurring either to his materials or equipment or those of others.
9. Emergency contacts nos. must be displayed at prominent locations
10. Tarpaulin being inflammable should not be used (instead, only non-infusible covering materials shall be used) as protective cover while preheating, welding, stress relieving etc. at site.

13.2.12 HSE PREPAREDNESS FOR ADVERSE CLIMATES AND WEATHER

Subcontractor to remain updated on possible adverse weather conditions through reliable sources and all precautions taken accordingly.

13.2.12.1 SUMMER

1. The Working Time and Lunch Hour will be as per instruction of Statutory Authorities (no work between 11am to 3:30pm). However, in case temp comes down due to rain/cloudy weather work will continue as per normal routine.
2. During long lunch break, worker will be allowed to go back home for rest. Those who will like to stay back will avail at the facility of rest shed or other designed area.
3. They will be allowed to take small break during work as per their need.
4. Water sprinkling will be done on roads to reduce dust concentration.
5. Workers will be provided with adequate cool drinking water and Butter milk/Lemon water etc.
6. Adequate ORS stock will be made available at the work location in the First-Aid Box for use as needed and at First-aid Center for emergency need.
7. Fire prevention shall be on high alert, with removal of dry grass and bushes, etc, inside and outside the surrounding work areas. No smoking, and control of open flame/sparks shall be maintained and monitored.
8. Worker will be informed about the Do’s and Don’ts to be followed during summer in the Pre Job Brief.

Do's & Don'ts

9. Drink plenty of cool water and other non-alcoholic fluid and keep body well hydrated.
10. Eat salt in food to replenish loss of salt through sweating.
11. Avoid over physical exercise.
12. Have adequate sleep at night.
13. Eat light and less spicy food
14. Avoid eating food which was cooked long time ago.
15. Nobody should use small water bodies such as pits, running rain water through crevices etc. for drinking and cleaning purpose as it may be unhygienic.

Emergency Handling

In case of emergency due to heat disorder:

16. Rescue the victim from workplace and place under shed.
17. If to be rescued from height, use stoke basket or rescue kit.
18. Inform Ambulance immediately.
19. If nearby any air conditioned room/shed is available, place him inside the room/shed.
20. Administer First aid by trained First aider for Heat Disorder
21. If conscious, give him ORS solution to drink.
22. If required send the victim hospital immediately.

13.2.12.2 Monsoon

A. Height Work & Structural Safety:

1. Ensure that all height work platforms are barricaded and avoid any highly hazardous
2. height work.
3. Ensure that all personnel have good quality and intact safety shoes
4. Stop all dangerous height work during rain
5. Explain Do's and Don'ts to workers during Tool Box Meetings
6. Ensure that there are no weak structures, boards etc. that can fall during high winds
7. Do not allow any loose material (e.g. GI sheet, Ply board, empty cement bag, aluminum foil, foam sheets etc.) on roof sheds or top of structures.
8. Do not permit any one to ride up or come down scaffolds frame work during heavy wind or rain.
9. Provide "anchor" of adequate strength to scaffolds and other high-rise structures.
10. All rest sheds and GI sheds will be anchored into the round and wall and roof panels will be secured with J hook to prevent shed from blowing over or parts/pieces becoming airborne. Proper earthing per IS standard is also to be installed.
11. Do not go alone nor permit anyone to stay at tower-tops, roof-tops, high structures or on electrical poles during the course of stormy weather or heavy rain.

B. Electrical:

1. All electrical connections / loads have to be routed through ELCB / RCCB (residual current circuit breaker) whose rating should be 30mA.
2. RCCB operational checks need to be done DAILY / WEEKLY during monsoon season.
3. Avoid joints on power cables which need to be laid over-head or under-ground, better not to have any joint at all. In case joints become essential, such cables must be housed rigidly and insulation must be provided as per approved standard. The joint shall be suitable for outdoor use.
4. All electrical distribution board shall be properly covered at top and sides to protect from rain water. Extension boards shall be protected from rain water.
5. Ensure proper “earthing” for each and every electrical appliance.
6. Double earthing need to be provided for 3-phase power supply and for voltage more than 220V.
7. Provide lightening arrestors at the top of Boiler 3 and boiler 4 and rest sheds which are not covered by existing lightening arrestor of other installation.

C. Others:

1. Maintain smooth flow on open drains. i.e. no obstruction or blockade shall be made on storm water drains. If required, make temporary drains.
2. Arrange back-filling of excavated pits on war-footing basis.
3. Arrange bringing down booms of all cranes, hydra machines during stormy weather (wind speed 40-50 kmph)
4. Confirm that all gantry cranes are effectively choked to prevent rolling and toppling.
5. Do not forget to deep ready a dew battery operated lights at site-offices during rainy season.
6. Avoid using wet damp clothes.
7. Barricade excavated zone filled with water.
8. Engage diesel operated water pump to dewater work area. For electrically operated water pump, the starter shall be protected from rain water. All rotating parts shall be guarded. Ensure availability of sufficient water pumps.

D. Health and hygiene:

1. Monsoon reduces the immunity of our body and makes us vulnerable to many diseases which are commonly associated with this season. It is time for us to keep our body challenging against disease by boosting our immunity and taking safety measures against these diseases.

2. The diseases associated with monsoon are Malaria, Jaundice, Gastro-intestinal infections, like typhoid, cholera etc. apart from these viral infections like cold and cough also make their presence felt. Majority of above said diseases are on account of:
3. Puddle of water formed due to rain become breeding grounds for mosquitoes which spread disease like, malaria and dengue fever. As a precautionary measure against mosquito-bite disease one can use mosquito net around the end which is better choice to mosquito repellants like mats and coils.
4. Pollution of drinking water during monsoon is very common. It is very necessary to drink clean and pure water when water-borne monsoon diseases like diarrhea and gastro-intestinal infections threaten us.
5. Walking in dirty water during rainy season leads of numerous fungal infection which affect toes and nails. Diabetic patients have to take a special care about their feet. Keeping feet always dry and clean is very necessary. Avoid walking in dirty water. Keep shoes socks and raincoats dry and clean.

E. Workmen will be made aware of following Do's and Don'ts:

1. Do not sleep in daytime.
2. Avoid over physical exertion.
3. During lightning and thunder storm, do not take shelter under tree. Take shelter inside rest shed or store room.
4. Wash vegetables with clean water and steam them well to kill germs.
5. Avoid eating un-cooked foods and salads should be washed properly before consumption.
6. Drink plenty of water and keep body well-hydrated.
7. Always keep the surrounding area dry and clean. Don't allow to get water accumulated around.
8. Keep body warm as viruses attack immediately when body temperature goes down.
9. Do not enter air conditioned room with wet hair and damp cloths.
10. Dry your feet and webs with soft dry cloth whenever they are wet.
11. Eat light and less spicy food.
12. Avoid eating food which was cooked long time ago.
13. Eat salt in food to replenish loss of salt through sweating.

13.2.12.3 Emergency Weather Conditions

A. Cyclone/Severe thunder storm

In the event of Cyclone/Severe thunder storm, alert will be issued by subcontractor on notification received by Govt. authorities/Metrological departments Customer or BHEL.

The actions required during cyclone/rough weather:

1. Check and advice subcontractors to cleanup work area. Pick up all loose and unused material of respective supervisor's area.
2. Tie to secure all gas cylinders to avoid displacement and unsafe conditions which could be due to wind pressure.

3. Secure portable electricity generating sets and other equipment, pumps, hoses etc.
4. Make preparation for removal of water logging.
5. Take review of work activity and make preparation for removal of equipment and material from vulnerable areas.
6. Isolate/turn off all electrical power form the main panel/switches. Secure and anchor panels properly.
7. Recheck anchorage/tie of all temporary structures/sheds, tall objects, cranes, rigs, scaffolds etc. to avoid toppling due to wind force.
8. Cranes boom shall be secured, either locked or lowered the booms as reasonably and practicably possible and rigs to safe position for the safety point of view.
9. Group up all trash barrels, wooden pallets, forms; wooden decks etc. and anchor properly.
10. Welding machines, air compressors and such equipment are to be grouped together and secured to the stable objects. Welding leads, electrical cables, hoses are to be rolled up and secured properly.
11. Set on site vehicles on high ground in the site area with brakes set firmly.
12. Anchor all tanks, vessels, gas cylinders that may be moved by high wind and water.
13. Evacuate job site.

Personnel Evacuation:

14. Personnel Evacuation will be required if predicted wind speed and storm surge heights are beyond acceptable limits as per the instructions from Govt. Authorities/ Metrological departments or Customer.
15. Once the warning is received for personnel evacuation, an emergency response team shall be formed. The team will work with local authorities and other agencies formed/deployed to evacuate and transport all personnel involved in the project to the cyclone shelter.
16. Cyclone may be followed by the calm “EYE”, be aware of it. If the wind suddenly drops, don’t assume the cyclone is over. Violent wind may resume from the opposite side direction. Wait for the official “All clear Signal”.
17. After the cyclone, do not go outside until officially communicated about safe situation outside. Use recommended routes for returning. Do not panic or rush while returning.
18. Checking of gas leaks and well being of electrical appliances is essential before leaving the site.
19. Follow local communications for official warning and advice. The construction Manager shall also obtain updates from customer/metrological departments and communicate to the personnel on project site.

13.2.12.4 Preparedness for Other Adverse Climates and Weather Conditions

All Preventive and Precautionary measures to ensure Health & Safety of workers in all possible adverse weather conditions based on the analysis of the local area conditions to be taken by the subcontractor

13.3 ENVIRONMENTAL CONTROL

1. Environment protection has always been given prime importance by BHEL. Environmental

damage is a major concern of the principal subcontractor and every effort shall be made, to have effective control measures in place to avoid pollution of Air, Water and Land and associated life.

2. Subcontractor shall list out all applicable environmental aspects and impacts, and ensure control measures to manage the same.
3. Chlorofluorocarbons such as carbon tetrachloride and trichloroethylene shall not be used.
4. Waste disposal shall be done in accordance with the guidelines laid down in the project specification.
5. Any chemical including solvents and paints, required for construction shall be stored in designated bonded areas around the site as per MSDS.
6. In the event of any spillage, the principle is to recover as much material as possible before it enters drainage system and to take all possible action to prevent spilled materials from running off the site. Subcontractor shall use appropriate MSDS for clean-up technique. Subcontractor shall be responsible for the cleanliness of their own areas.
7. Subcontractor shall ensure that noise levels generated by plant or machinery are as low as reasonably practicable. Where the subcontractor anticipates the generation of excessive noise levels from his operations the subcontractor shall inform BHEL accordingly so that reasonable & practicable precautions can be taken to protect other persons who may be affected.
8. It is imperative on the part of the subcontractor to join and effectively contribute to environmental protection measures such as tree plantation and towards social causes and maintaining good relations with local populace.
9. The subcontractor shall carry out periodic air and water quality check and illumination level checking in respective area of work place and take suitable control measure to maintain the same as per applicable laws / standards

13.3.1 WASTE MANAGEMENT

1. Subcontractor shall take suitable measures for waste management and fulfilling requirements of environment related laws/legislation as a part of normal construction activities.
2. Compliance with the legal requirements on storage/ disposal of paint drums (including the empty ones), Lubricant containers, Chemical Containers, and transportation and storage of hazardous chemicals will be strictly maintained.
3. Details of E-Waste, Hazardous Waste, shall be submitted to BHEL as per Format No. HSEP: 14-F18 and HSEP: 14-F19 respectively

13.3.1.1 BINS AT WORK PLACE

1. Sufficient rubbish bins shall be provided close to workplaces.
2. Bins should be painted yellow and numbered.
3. Sufficient nos. of drip trays shall be provided to collect oil and grease.
4. Sufficient qty. of broomsticks with handle shall be provided.
5. Adequate strength of employees should be deployed to ensure daily monitoring and service for waste management.

13.3.1.2 STORAGE AND COLLECTION

1. Different types of rubbish/waste should be collected and stored separately.

2. Paper, oily rags, smoking material, flammable, metal pieces should be collected in separate bins with close fitting lids.
3. Rubbish should not be left or allowed to accumulate on construction and other work places.
4. Do not burn construction rubbish near working site.

13.3.1.3 SEGREGATION

1. Earmark the scrap area for different types of waste.
2. Store wastes away from building.
3. Oil spill absorbed by non-combustible absorbent should be kept in separate bin.
4. Clinical and first aid waste stored and incinerated separately.

13.3.1.4 DISPOSAL

1. Sufficient containers and scrap disposal area should be allocated.
2. All scrap bin and containers should be conveniently located.
3. Provide self-closing containers for flammable/spontaneously combustible material.
4. Keep drainage channels free from choking.
5. Make schedule for collection and disposal of waste.

13.3.1.5 WARNING AND SIGNS

1. Appropriate signage to be displayed at scrap storage area
2. No toxic, corrosive or flammable substance to be discarded into public sewage system.
3. Waste disposal shall be in accordance with best practice.
4. Comply with all the requirements of Pollution Control Board (PCB) for storage and disposal of hazardous waste.

13.4 HOUSEKEEPING

1. Keeping the work area clean/ free from debris, removing unused scaffoldings, scraps, insulation/ sheeting wastage /cut pieces temporary structures, packing woods etc. will be in the scope of the subcontractor.
2. Such cleaning has to be done by subcontractor within quoted rate, on daily basis by dedicated identified groups equipped with all require PPEs and training. The details of housekeeping group shall be provided to BHEL.
3. If such activity is not carried out by subcontractor / BHEL is not satisfied, then BHEL may get it done by other agency and actual cost along with BHEL overheads will be deducted from subcontractor's bill. Such decisions of BHEL shall be binding on the subcontractor.
4. Pests, such as beehives etc. shall be periodically removed in a humane fashion
5. **Following are to be taken care of on daily basis.**

i. All surplus earth and debris are removed/disposed of from the working areas to identified locations.
ii. Unused/Surplus cables, steel items and steel scrap lying scattered at different places /elevation within the working areas are removed to identify locations.
iii. All wooden scrap, empty wooden cable drums and other combustible packing materials, shall

be removed from workplace to identified locations. Sufficient waste bins shall be provided at different work places for easy collection of scrap/waste. Scrap chute shall be installed to remove scrap from high locations

iv. Access and egress (stair case, gangways, ladders etc.) path should be free from all scrap and other hindrances.
v. Workmen shall be educated through tool box talk about the importance of housekeeping and encourage not to litter.
vi. Labor camp area shall be kept clear and materials like pipes, steel, sand, concrete, chips and bricks, etc. shall not be allowed in the camp to obstruct free movement of men and machineries.
vii. Fabricated steel structures, pipes & piping materials shall be stacked properly.
viii. No parking of trucks/trolleys, cranes and trailers etc. shall be allowed in the camp, which may obstruct the traffic movement as well as below LT/HT power line.
ix. Utmost care shall be taken to ensure over all cleanliness and proper upkeep of the working areas

13.5 TRAFFIC MANAGEMENT

13.5.1 SAFE WORKPLACE TRANSPORT SYSTEM

1. Traffic routes in a work place shall be suitable for the persons or vehicles using them.
2. Traffic routes for pedestrians and vehicles shall be clearly demarcated and indicated
3. Traffic routes shall never intersect the area of work and shall not endanger the site personnel
4. For internal traffic, lines marked on roads / access routes and between buildings shall clearly indicate where vehicles are to pass.
5. Temporary obstacles shall be brought to the attention of drivers by warning signs / hazard cones.
6. Power cables shall be maintained at a minimum height above ground as specified in Indian Electricity Act & Rules.
7. Sensible speed limits shall set and clearly displayed. Painted Speed ramps preceded by a warning signs or marker are necessary for stretches of roads exceeding 50 meters.
8. The traffic route should be wide enough to allow vehicles to pass and re-pass oncoming or parked traffic and it may be advisable to introduce on-way system or parking restrictions.
9. Safest route shall be provided between places where vehicles have to call or deliver.
10. Avoid vulnerable areas/items such as fuel or chemicals tanks or pipes, open or unprotected edges and structures likely to collapse
11. Safe areas shall be provided for loading and unloading of material. Loading / Unloading Permit shall be taken from BHEL prior to any significant loading / unloading activity
12. Avoid sharp or blind bends. If this is not possible hazards should be indicated e.g. blind corner.
13. Ensure road crossings are minimum and clearly signed.
14. Entrance and gateways shall be wide enough to accommodate a second vehicle without causing obstruction.
15. Forklift trucks shall not pass over road hump unless of a type capable of doing so.

16. Overhead electric cable, pipes containing flammable hazardous chemical shall be shielded by using goal posts height gauge posts or barriers.
17. The height of Power cables above areas of movement shall conform to Indian Electricity Rules
18. Road traffic signs shall be provided on prominent locations for prevention of accidents and hazards and for quick guidance and warning to employees and public.
19. Safety signs shall be displayed as per the project working requirement and guideline of the state in which project is done.
20. Vehicles hired or used shall not be parked within the 15m radius of any working area. Any vehicle, that is required to be at the immediate/near the vicinity, shall be approved by the person in-charge of the site.

13.5.2 TRAFFIC ROUTE FOR PEDESTRIANS

1. Where traffic routes are used by both pedestrians and vehicles road shall be wide enough to allow vehicles and pedestrians safely.
2. Separate routes shall be provided for pedestrians to keep them away from vehicles. Provide suitable barriers/guard at entrances/exit and the corners or buildings.
3. Where pedestrian and vehicle routes cross, appropriate crossing shall be provided.
4. Where crowd is likely to use roadway e.g. at the end of shift, stop vehicles from using them at such times.
5. Provide high visibility clothing for people permitted in delivery area.

13.5.3 WORK VEHICLES

Work vehicles shall be as safe stable efficient and roadworthy as private vehicles on public roads. Subcontractors shall ensure that drivers are suitably trained and have valid license and experience for the designated class of vehicle. All vehicle e.g. heavy motor vehicle forklift trucks dump trucks mobile cranes shall ensure that the work equipment conforms to the following:

1. A high level of stability.
2. A safe means of access/egress.
3. Suitable and effective service and parking brakes.
4. Windscreens with wipers and external mirrors giving optimum all round visibility.
5. Provision of horn, vehicle lights, reflectors, reversing lights, reversing alarms.
6. Provision of seat belts.
7. Guards on dangerous parts.
8. Driver protection - to prevent injury from overturning and from falling objects/materials.
9. Driver protection from adverse weather.
10. No vehicle shall be parked below HT/LT power lines in conformance to Indian Electricity Act & Rules.
11. Valid Pollution Under Control certification for all vehicles

13.5.4 DAILY CHECKS BY DRIVER

There should also be daily safety checks containing below mentioned points by the driver before the vehicle is used. Subcontractors should ensure that drivers carry out these checks as a minimum.

Brakes	Mirrors	Warning signals
Tires	Windscreen waters	Specific safety system i.e. control interlocks
Steering	Wipers	

13.5.5 TRANSPORTATION OF PERSONNEL AND MATERIALS BY VEHICLES

1. All drivers shall hold a valid driving License for the class of vehicle to be driven and be registered as an authorized BHEL driver with the Administration Department.
2. Securing of the load shall be by established and approved methods, i.e. chains with patented tightening equipment for steel/heavy loads. Sharp corners on loads shall be avoided when employing ropes for securing.
3. All overhangs shall be made clearly visible and restricted to acceptable limits
4. Load shall be checked before moving off and after traveling a suitable distance.
5. On no account is construction site to be blocked by parked vehicles Drivers of vehicles shall only stop or park in the areas designate by the stringing foreman.
6. Warning signs shall be displayed during transportation of material.
7. All vehicles used by Subcontractor shall be in worthy condition and in conformance to the Land Transport requirement

13.5.6 MAINTENANCE

All Vehicles used for transportation of man and material shall undergo scheduled inspections on frequent intervals to secure safe operation. Such inspections shall be conducted in particular for steering, brakes, lights, horn, doors etc. Site management shall ensure that work equipment is maintained in an efficient, working order and in good repair. Inspections and services carried out at regular intervals of time and or mileage. No maintenance shall be carried below HT/LT power lines.

13.6 EMERGENCY PREPAREDNESS AND RESPONSE

1. Subcontractor shall develop Emergency preparedness and response capability and Emergency Response Team as per HSEP06: HSE Procedure for Emergency Preparedness and Response
2. Availability of adequate number of first aiders and fire warden shall be ensured
3. All the subcontractor's supervisory personnel and sufficient number of workers shall be trained for fire protection systems. Enough number of such trained personnel must be available during the tenure of contract. Subcontractor should nominate his supervisor to coordinate and implement the safety measures and communicate the same to BHEL.
4. Assembly point shall be earmarked and access to the same from different location shall be shown
5. Fire exit shall be identified and pathway shall be clear for emergency escape.
6. Appropriate type and number of fire extinguisher shall be deployed as per Clause No. 13.2.11 and validity shall be ensured periodically through inspection
7. Adequate number of first aid boxes shall be strategically placed at different work places to cater

to all emergency needs. Holder of the first aid box shall be identified on the box itself who will have the responsibility to maintain the same.

8. First aid center shall be developed at site with trained medical personnel and ambulance
9. Emergency contact numbers of the site shall be displayed at prominent locations.
10. Tie up with fire brigade shall be done in case customer is not having fire station.
11. Tie up with hospital shall be ensured in order to ensure the availability of following services to victims quickly without wasting precious time:
    a. Intensive Care Unit with Ventilator and other necessary life support systems
    b. Facility of specialized Orthopedic Surgery – in case of fracture / amputation
    c. Facility of specialized brain / neuro surgery – in case of head trauma
    d. Facility of specialized burn unit / ward – in case of Fire / burn injury
    e. and other facilities as per requirement at site location

    In case tie up with multiple hospitals is required to cover all possible accidents, same shall be done. The list of facilities to be regularly checked and updated.
12. A detailed emergency services (Fire / Medical etc.) tie up plan shall be submitted to BHEL in monthly report Format No. HSEP:14-F05
13. Mock drill shall be conducted on different emergencies periodically to find out gaps in emergency preparedness and taking necessary corrective action

14 HSE INSPECTION

Inspection on HSE for different activities being carried out at site shall be done to ensure compliance to HSEMS requirements. The subcontractor shall maintain necessary safety equipment as applicable, to enable inspection personnel/agency perform Inspection. If any test equipment is found not complying with proper safety requirements then the Inspection Agency may withhold inspection, till such time the desired safety requirements are met.

The requirements of respective work permits are to be ensured by respective supervisors, safety personnel and area in-charges. In addition, the formats & checklists as per Clause 21 of this document provided by BHEL shall be used for inspection by Safety personnel (as a minimum), and records of inspection to be maintained. BHEL shall reserve the right to modify any Format in this document or introduce additional checklists / formats to ensure regular inspection of all equipment as per requirement.

14.1 DAILY HSE CHECKS

Both the Site Supervisors and HSE Supervisors are to conduct daily site Safety inspection around work activities and premises to ensure that work methods and the sites are maintained to an acceptable standard. The following are to form the common subjects of a daily safety inspection:

1. **Height Work:**
   a. Safe, barricaded platform
   b. PPEs
   c. Proper method
   d. Awareness
2. Personal Safety wears & gear compliance.
3. Complying with site safety rules and permit-to-work (PTW).
4. Positions and postures of workers.
5. Use of tools and equipment etc. by the workers.
6. The inspection shall be carried out just when work starts in beginning of the day, during peak activities period of the day and just before the day's work ends.

14.2 INSPECTION OF HEIGHT WORKING

1. Any kind of height work (above 2 meters) shall not be carried out without active physical supervision by concerned supervisor or safety personnel. All non-conformances related to height work shall be handled on priority and closed immediately after halting the work.
2. A roster of personnel deployed for inspection of height work and other critical activities shall be prepared and submitted to BHEL in monthly report Format No. HSEP:14-F05, in order to ensure effective supervision at all times
3. Inspection on height working shall be conducted **daily** by supervisors before start of work to ensure safe working condition including provision of:

a. Fall arrestor b. Lifelines c. Safety nets	d. Fencing and barricading e. Warning signage f. Covering of opening	g. Proper scaffolding with valid Tags, access and egress. h. Illumination

4. Inspection on height working shall be conducted once in a week by HSE officer as per
5. Format no. HSEP: 14-F10.
6. Medical fitness, including vertigo test of height worker shall be ensured.
7. Height working shall not be allowed during adverse weather.

14.3 INSPECTION OF PPE

PPEs shall be inspected by HSE officer at random once in a week as per Format no. HSEP: 14-F06 for compliance to standard and provisions and any adverse observation shall be recorded in the PPE register.

14.4 INSPECTION OF T&Ps

1. All T& Ps being used at site shall be inspected by HSE officer once in a month as per specific Formats in this document, or (if not available) general Format no. HSEP: 14-F07 for its healthiness and maintenance.
2. A master list of T&Ps and validity of their inspection certificates shall be maintained by each agency and details shall be submitted to BHEL in monthly format no. HSEP:14-F05.
3. The T&Ps which require third party inspection shall be checked for its validity during inspection.

The third party test certificate should be accompanied with a copy of the concerned competent person's valid qualification record. BHEL shall be given advance intimation of Third Party Inspection. BHEL shall associate with Inspection as per discretion.

14.5 INSPECTION OF CRANES AND WINCHES

1. Cranes and winches shall be inspected by the operator through a daily checklist for its safe condition (as provided by the equipment manufacturer) before first use of the day.
2. Cranes and Winches shall be inspected by HSE officer once in a month as per Format no. HSEP: 14-F08 & F09 for healthiness, maintenance and validity of third party inspection.
3. The date of third party inspection and next due date shall be painted on cranes and winches.
4. The operators/drivers shall be authorized by sub-contractor based on their competency and experience and shall carry the I-card.
5. The operator should be above 18 years of age and should be in possession of driving license of HMV man & goods), vision test certificate and should have minimum qualification so that he can read the instructions and check list.

14.6 INSPECTION ON WELDING AND GAS CUTTING OPERATION

1. Supervisor shall ensure that no flammable items are available in near vicinity during welding and gas cutting activity.
2. Gas cylinders shall be kept upright.
3. Use of Flash back arrestor shall be ensured at both ends.
4. Inspection during welding and gas cutting operations shall be carried out by HSE officer once a month as per Format no. HSEP: 14-F11.
5. Use of fire blanket to be ensured to avoid falling of splatters during welding or gas cutting operation at height.
6. Availability of fire extinguisher in vicinity shall be ensured.

14.7 INSPECTION ON ELECTRICAL INSTALLATION / APPLIANCES

1. Ensure proper earthing in electrical installation
2. Use of ELCB at electrical booth
3. Electrical installation shall be properly covered at top where required
4. Use appropriate PPEs while working
5. Use portable electrical light < 24 V in confined space and potentially wet area.
6. Monthly inspection shall be carried out as per Format no. HSEP: 14-F12.

14.8 INSPECTION OF ELEVATOR

1. Elevators shall be inspected by concerned supervisors once in a week as per Format no. HSEP: 14-F13.
2. All elevators shall be inspected by competent person and validity shall be ensured.
3. The date of third party inspection and next due date shall be painted on elevator.

14.9 MONTHLY SITE INSPECTION

Subcontractor shall carry out monthly HSE inspection of all work areas as per Format No. HSEP:14-F20 and submit to BHEL

14.10 NON-CONFORMITY HANDLING:

Any serious non-conformances identified during inspection observed shall be addressed immediately.

In case immediate closure of non-conformities is not possible:

a. work to be halted in the area
b. Non-conformance to be generated and submitted to responsible person and BHEL
c. non-conformance to be resolved through responsible agency / person
   Only after closure of serious non-conformances, work to be allowed to resume.

All non-conformances & safety violations to be recorded and closed in a time bound manner.

15 HSE PERFORMANCE

HSE performance of subcontractor shall be monitored as per BHEL criteria, based on which, marks will be awarded. Marks can be used to evaluate and rate the contractor as per BHEL internal systems

HSE performance of the subcontractor shall be monitored as per the following parameters: (For each contract-wise package). **Periodicity**: RA Bill period

Sl. No.	Parameters of measurement	Ref Clauses	Weightage	Actual
1	Availability of safety officers at site – absence up to 15% permissible. Score proportionately gets reduced with higher rate of absence. Availability to be reckoned from start date of manpower mobilization	7.1	10	
2	Attendance by the safety officer and site CM (as applicable) in the meeting convened by BHEL	20	5	
3	Level of compliance w.r.t decisions taken in previous meetings/audit/inspection/as reported.	-do-	5	
4	Timely submission of monthly report on safety in the prescribed format	11	3	
5	Timely reporting any incident including near–miss to BHEL /Customer/statutory authority (if required) and submission of investigation report of all LTIs/	12	10	

	Major Property Loss incident and HSE events			
6	Degree of PPE compliance, Fall protection arrangements and safety net coverage	8.3, 14	15	
7	Level of compliance w.r.t safety rules	13,14	25	
8	Availability of proper first-aid facility , ambulance, hygienic labor colony and other adequate labor welfare initiatives, conducting of health check-up as per BOCW requirements	8	6	
9	Conducting induction training, skill training, tool box meeting, mock-drills, HSE Promotion, Emergency Preparedness and Response. Participation in BHEL training also counted	9.0	6	
10	Level of House-keeping, Environmental Control	13.3, 13.5	10	
11	Level of general illumination	8.4.11	5	
A	**TOTAL Obtained**		100	

Penalty score:

i. For each fatality: -10
ii. For each Major Incident: -07

NET TOTAL score will be arrived after deducting penalty score from Total score.

Subcontractor shall make available all data required for evaluation to BHEL as and when demanded.

1. If safety record of the subcontractor in execution of the awarded job is to the satisfaction of safety department of BHEL, issue of an appropriate certificate to recognize the safety performance of the subcontractor may be considered by BHEL after completion of the job.

2. 1.5% of running bill shall be cleared subject to certification of desired safety performance by BHEL

16 HSE PENALTIES FOR NON-COMPLIANCE

1. Nonconformity of safety rules and safety appliances will be viewed seriously and BHEL has right to impose fines on the subcontractor for every instance of violation noticed.

2. The applicable penalties for HSE violations are given in Format No. HSEP14-F14 of this document

3. The list of non-compliances given in above format is not exhaustive. The BHEL site in-charge has liberty to impose a penalty for any other non-compliance and incidents of any nature.

4. If principal customer or statutory and regulatory bodies impose penalty on ground of statutory non-compliance or non-compliance of HSE rules by the subcontractor or any incident of any nature including fatality or permanent disability, the same shall be passed on to the subcontractor with appropriate overhead

5. The penalty amount shall be recovered from subcontractors from the RA Bill, otherwise Final bill.

17 COMPENSATION TO ACCIDENT VICTIMS

1. BHEL shall recover the amount of compensation paid to victim(s) by BHEL towards loss of life / permanent disability due to an accident which is attributable to the negligence of contractor, agency or firm or any of its employees as detailed below.

b. **Victim**: Any person who suffers permanent disablement or dies in an accident as defined below.

c. **Accident:** Any death or permanent disability resulting solely and directly from any unintended and unforeseen injurious occurrence caused during the manufacturing/ operation and works incidental thereto at BHEL factories/ offices and precincts thereof, project execution, erection and commissioning, services, repairs and maintenance, trouble shooting, serving, overhaul, renovation and retrofitting, trial operation, performance guarantee testing undertaken by the company or during any works / during working at BHEL Units/ Offices/ townships and premises! Project Sites.

d. Compensation in respect of each of the victims:

i. In the event of death or permanent disability resulting from Loss of both limbs: Rs. 10,00,000/- (Rs. Ten Lakh)

ii. (ii) In the event of other permanent disability: Rs. 7,00,0001- (Rs. Seven Lakh)

e. **Permanent Disability**: A disablement that is classified as a permanent total disablement under the proviso to Section 2 (I) of the Employee's Compensation Act, 1923. "

2. In addition to above, contractor shall provide appropriate compensation to victims of major and fatal incidents as per Employee Compensation Act, 1923, ESIC Act, 1948 or as per any existing Acts and guidelines

18 INTERNAL & EXTERNAL HSE AUDITS

1. Subcontractor shall extend full co-operation and maintain necessary documents & records as required by Internal & External HSE Audit carried out by BHEL. / Third Party
2. All non-conformities and observations on HSE shall be disposed of-by subcontractor in a time bound manner as detailed in Audit Report.
3. All required corrective actions shall be taken by the subcontractor in order to avoid recurrence

19 OTHER REQUIREMENTS

1. In case of any delay in completion of a job due to mishaps attributable to lapses by the subcontractor, BHEL shall have the right to recover cost of such delay from the payments due to the subcontractor, after holding an appropriate enquiry and notifying the subcontractor suitably.

2. **RISK & COST:**

   If the subcontractor fails to improve the standards of safety in its operation to the satisfaction of BHEL after being given reasonable opportunity to do so and/or if the subcontractor fails to take appropriate safety precautions or to provide necessary safety devices and equipment or to carry out instruction regarding safety as per contractual requirements, BHEL shall have the right to take corrective steps at the risk and cost of the subcontractor after giving a notice of not less than 7 days indicating the steps that would be taken by BHEL.

3. If the subcontractor succeeds in carrying out its job in time without any fatal or disabling injury incident and without any damage to property BHEL may, at its sole discretion, favourably consider to reward the subcontractor suitably for the performance.

4. The subcontractor shall take all measures at all the sites of work to protect all persons from incidents and shall be bound to bear the expenses of every suit, action or other proceeding of law that may be brought by any persons for injury sustained, death or damage to environment

owing to neglect of the HSE precautions by the subcontractor; and shall be liable to pay any such persons such compensation, should such claim proceeding be filed against BHEL.

The subcontractor hereby agrees to indemnify BHEL against the same.

20 HSE REVIEW

BHEL shall hold HSE review meeting every month or as per requirement in order to discuss and resolve HSE issues of site and improve HSE performance. It will also discuss the incidents occurred since previous meeting, its root cause and Corrective action. The indicative agenda is given below:

1. Implementation of earlier MOM
2. HSE performance review
3. HSE inspection review w.r.t non-conformances observed and their status
4. HSE audit and CAPA
5. HSE training conducted and requirement
6. Health check-up camp
7. HSE planning for the erection and commissioning and installation activities in the coming month
8. HSE reward and promotional activities
9. HSE data analysis and improvement – Data analyzed will include non-conformances closed and pending, incident data, training data etc.

Subcontractor shall ensure presence of site in-charge, all package in-charges and safety officers, as communicated by BHEL in the meeting.
Subcontractor shall take requisite actions as per record notes and as decided in the meeting, in a time bound manner and submit compliance report to BHEL.

21 FORMATS USED

This is minimum list of Formats to be used for reporting by the subcontractor. Other Formats are indicated in respective HSE Procedures, Work Permits, OCPs or as specified by BHEL. The medium of reporting can be hard / soft as indicated by BHEL.
BHEL can modify these Formats or introduce new Formats to the extent necessary to get the desired performance data of all HSE activities.

SN	Format Name	Format No.	Frequency of check	Rev
1	Work at Height Permit	HSEP:14-FP01	Before start of work and regularly thereafter as per Permit conditions	00
2	Hot Work Permit	HSEP:14-FP02		00
3	Confined Space Work Permit	HSEP:14-FP03		00
4	Excavation Work Permit	HSEP:14-FP04		00
5	Radiation Work Permit	HSEP:14-FP05		00
6	Lifting Activity Work Permit	HSEP:14-FP06		00
7	Lockout-Tagout Work Permit	HSEP:14-FP07		00
8	Inspection of First Aid Box	HSEP:14-F01	Weekly	00
9	Health Check Up	HSEP:14-F02	With new Induction & as per requirement thereafter	00
10	HSE Induction / Regular / On-the-Job Training	HSEP:14-F03	With new Induction & as per requirement thereafter	00
11	Tool Box Talk	HSEP:14-F04	Daily before job start	00
12	Site HSE Report	HSEP:14-F05	Monthly	00
13	PPE Inspection	HSEP:14-F06	Weekly	00
14	PPE Issue and Receipt	HSEP:14-F06A	With new Induction	
15	Inspection of T&Ps (General)	HSEP:14-F07	Monthly / As per requirement	00
16	Inspection of Cranes	HSEP:14-F08	Monthly / As per requirement	00
17	Inspection of Winches	HSEP:14-F09	Monthly / As per requirement	00
18	Inspection of Height Working	HSEP:14-F10	Daily / As per requirement	00
19	Inspection on Welding & Gas Cutting	HSEP:14-F11	Weekly / As per requirement	00
20	Inspection on Electrical Installation	HSEP:14-F12	Weekly / As per requirement	00
21	Inspection on Elevator	HSEP:14-F13	Weekly / As per requirement	00
22	HSE Penalty	HSEP:14-F14	-	00
23	Initial Verification of PPE's & Lifting Tools & Tackles	HSEP:14-F15	As and when new PPEs and T&Ps are received	00
24	Inspection of Labor Colony	HSEP:14-F16	Monthly / as per requirement	00
25	Recording of First Aid Injuries	HSEP:14-F17	As and when such injuries occur	00
26	E-waste Handled / Generated	HSEP:14-F18	Half Yearly	00
27	Hazardous Waste at the Facility	HSEP:14-F19	Half Yearly	00
28	HSE Checklist-cum-Compliance Report	HSEP:14-F20	As per Audit Calendar	00
29	Illumination Levels	HSEP:14-F21	Weekly / As per requirement	00
30	Incident Reporting	HSEP:14-F22	-	00
31	Incident Recording	HSEP:14-F23	-	00

HSEP:14-FP01

WORK AT HEIGHT PERMIT	Permit No. & Date
Project & Unit:	Emergency Contact Nos:
BHEL Sub-contractor:	

Exact Location of Work:_____

Nature / Description of Work:_____

Duration of Work Execution *: From Date:_____to Date:_____Daily from _____ hrs. to _____hrs.

Name of Sub-Contractor Performing the Work: _____

Name of Sub-Contractor's Site Engineer (Permit Requesting Authority):_____Sign:_____

Name of Sub-Contractor's Package In-charge:_____Sign:_____Date:_____

The above described work will be done under all the safety precautions mentioned as under during the currency of the Permit.

No.	Item	Yes	Not required / Remarks
1	All workers on job are competent and medically fit (No Height Phobia) for working at height		
2	Hazards in the vicinity are identified, controlled and communicated to the worker.		
3	Scaffolding soundness inspected is available for use with valid tag		
4	Work platform is not made of bamboo or weak material. Barricading is available with Top, Mid Rails and Toe Guard.		
5	Working platform is clean without any unwanted material. Floor openings are covered.		
6	Access and exit to workplace are safe, marked and without obstruction.		
7	Adequate lighting provided (for dark hours) as per applicable lux standards (Refer HSEP:13)		
8	Safety nets are provided below working area.		
9	Area below the working platform has been cleared of all activity		
10	Ladders have been secured, inspected and provided as per BHEL standard/contract.		
11	Horizontal life lines are provided to cater to design specification of 2300 kg per person.		
12	Safety harness with life line support/ fall arrester are checked and available in working condition		
13	Safety shoes (non-slip), Helmet with chin strip available with employees		
14	Visible Signboards provided on working platforms in workers' understandable language		
15	All lifting / tightening tools, hand tools/equipment checked and in good condition		
16	ELCB provided for Electrical connections individually. Electrical cable, welding Hose/Compressed air hose properly secured and laid down without obstruction. Earth resistance is OK.		
17	Crane / Winch / Hydra operator is qualified and experienced		
18	Emergency response team & Medical Facilities available. Work area is cordoned off.		
19	Job Safety Analysis Submitted		
20	Additional Permits to be taken (Please specify & attach):		

Declaration: ***All the points mentioned in the above checklist have been checked and found OK***

Permit Receiver:

Site Engineer (Sub- Contractor):		Site Safety Officer (Sub-Contractor):	
Signature:		Signature:	
Name:	Designation:	Name:	Designation:

Permit Issuer:

Engineer of Concerned Execution Department (BHEL):		Site Safety Officer (BHEL):	
Signature:		Signature:	
Name:	Designation:	Name:	Designation:

Package-in-charge (BHEL):	
Signature:	
Name:	Designation:

Verified by Customer Representative (if applicable), Name: _____***Sign:*** _____***Date:*** _____***Time:*** _____

(* Permit valid for 7 days, subject to daily renewal, and extension as per overleaf instructions / record formats)

Work at Height Permit No. & Date: _____

Daily Work Area Condition Endorsement

Sl. No.	Date	Signature with Date & Time		Remarks
		Agency Safety	BHEL Safety	
Day 2				
Day 3				
Day 4				
Day 5				
Day 6				
Day 7				

Permit Extension Beyond Initially Requested Hours

Sl. No.	Extension Period		Remarks	Signature with Date & Time			
	From……. (Date & Time)	To…… (Date &Time)		Agency Site Engineer	Agency Safety Officer	BHEL Site Engineer (PIA)	BHEL Safety Officer
1.							
2.							
3.							
4.							
5.							
6							

TO BE SIGNED BY THE BHEL HSE & EXECUTION AFTER THE WORK IS OVER	
Permit is here by returned after completing the job & ensuring safe removal of men and material.	
Site Engineer, BHEL	**Site HSE Engineer, BHEL**
Signature:	Signature:
Name:	Name:

General Instructions:

1	This Permit is required for working at height of 2 mtr. and above or above excavation of 2 mtr or deeper.
2	This permit must be available at the work site all the times of the work.
3	Location and description of the work must be clearly indicated by the permittee.
4	Terms applicable must be clearly indicated by the permittee.
5	This permit shall be endorsed each day only after checking all the compliance jointly by the contractor and BHEL safety.
6	Permit shall be issued for not more than **7 days** including the issue date.
7	Permit shall be returned to the HSE Department of BHEL after completion of the job.
8	Before engaging anybody to work at height, height phobia needs to be ascertained and proper fitness certificate to be ensured.
9	All safety precautions to be taken as per work site HSE plan.
10	**Distribution of copy:**
	Original- Permittee, Duplicate –Department HOS, Contractor, Triplicate - Site HSE Dept.,

To be printed on both sides of an A4 Sheet

HSEP:14-FP02

HOT WORK PERMIT	Permit No. & Date
Project & Unit:	Emergency Contact Nos:
BHEL Sub-contractor:	

Exact Location of Work:_____

Nature / Description of Work: _____

Duration of Work Execution *: From Date:_____to Date:_____Daily from _____ hrs. to _____hrs.

Name of Sub-Contractor Performing the Work: _____

Name of Sub-Contractor's Site Engineer (Permit Requesting Authority):_____Sign:_____

Name of Sub-Contractor's Package In-charge:_____Sign:_____Date:_____

The above described work will be done under all the safety precautions mentioned as under during the currency of the Permit.

No.	Item	Yes	Not required / Remarks
1.	Welder is trained and qualified with good attendance in on-the-job training		
2.	Area ensured safe and free from all hazards (explosives etc.) with barricading and safe inlet / exit		
3.	Proper ventilation and lighting provided (in case of dark hours).		
4.	Gas hoses are in good condition and not cut / leaking		
5.	Pressure gauges/Flash back arrestor (at both ends) provided and in working condition.		
6.	Gas pressure in cylinder is within limits and hydraulic test certificate is available		
7.	Gas cylinders are stacked vertically and not below the welding / cutting area. Regulator key is available with cylinder. Gas cylinders covered with shields to prevent falling splinters.		
8.	Power supply to welding machine is through ELCB of 30 mA rating, which is tested and found ok; Earthing is tested and found OK		
9.	Welding machine input/output cables, welding holder and weld return clamp (Holder) are insulated and in good condition.		
10.	In case of welding in enclosed / confined spaces, the integrity of the structure and supports are ensured, Gas Testing done and evacuation system ensured in place		
11.	Emergency STOP buttons are in working condition. Welder /Helper knows how to operate it.		
12.	Welder & Fitter trained to connect ground/work return clamps (Holder) to work place prior to energization of welding machine.		
13.	Personal Protective equipment Minimum applicable: safety helmet, safety goggles, welding helmet, safety (rubber) shoes, leather gloves, long sleeve and nose mask -provided		
14.	In case of pits, water removed from the pit and wood/rubber insulation provided.		
15.	Safety signboards / cautions are in place.		
16.	Adequate and Suitable nos. of applicable firefighting extinguisher provided.		
17.	Nearby combustible material removed. Housekeeping done.		
18.	All workers explained about the hazards		
19.	First aid in attendance.		
20.	Any other Precautions or Permits required (Height Work, Confined Space etc.), give details and attach		

Declaration: ***All the points mentioned in the above checklist have been checked and found OK***

Permit Receiver:

Site Engineer (Sub- Contractor):		Site Safety Officer (Sub-Contractor):	
Signature:		Signature:	
Name:	Designation:	Name:	Designation:

Permit Issuer:

Engineer of Concerned Execution Department (BHEL):		Site Safety Officer (BHEL):	
Signature:		Signature:	
Name:	Designation:	Name:	Designation:

Package-in-charge (BHEL):	
Signature:	
Name:	Designation:

Verified by Customer Representative (if applicable), Name: _____***Sign:*** _____***Date:*** _____***Time:*** _____

(* Permit valid for 7 days, subject to daily renewal, and extension as per overleaf instructions / record formats)

Hot Work Permit No. & Date: _____

Daily Work Area Condition Endorsement

Sl. No.	Date	Signature with Date & Time		Remarks
		Agency Safety	BHEL Safety	
Day 2				
Day 3				
Day 4				
Day 5				
Day 6				
Day 7				

Permit Extension Beyond Initially Requested Hours

Sl. No.	Extension Period		Remarks	Signature with Date & Time			
	From……. (Date & Time)	To…… (Date &Time)		Agency Site Engineer	Agency Safety Officer	BHEL Site Engineer (PIA)	BHEL Safety Officer
1.							
2.							
3.							
4.							
5.							
6							

TO BE SIGNED BY THE BHEL HSE & EXECUTION AFTER THE WORK IS OVER	
Permit is here by returned after completing the job & ensuring safe removal of men and material.	
Site Engineer, BHEL	**Site HSE Engineer, BHEL**
Signature:	Signature:
Name:	Name:

General Instructions:

1	This Permit is required for all kinds of Hot Work eg. Welding, cutting etc..
2	This permit must be available at the work site all the times of the work.
3	Location and description of the work must be clearly indicated by the permittee.
4	Terms applicable must be clearly indicated by the permittee.
5	This permit shall be endorsed each day only after checking all the compliance jointly by the contractor and BHEL safety.
6	Permit shall be issued for not more than **7 days** including the issue date.
7	Permit shall be returned to the HSE Department of BHEL after completion of the job.
8	Before engaging anybody to work, competency and fitness to be ensured.
9	All safety precautions to be taken as per work site HSE plan.
10	**Distribution of copy:**
	Original- Permittee, Duplicate –Department HOS, Contractor, Triplicate - Site HSE Dept.,

HSEP:14-FP03

CONFINED SPACE WORK PERMIT	Permit No. & Date
Project & Unit:	Emergency Contact Nos:
BHEL Sub-contractor:	

Exact Location of Work:_____

Nature / Description of Work:_____

Duration of Work Execution *: From Date:_____to Date:_____Daily from _____ hrs. to _____hrs.

Name of Sub-Contractor Performing the Work: _____

Name of Sub-Contractor's Site Engineer (Permit Requesting Authority):_____Sign:_____

Name of Sub-Contractor's Package In-charge:_____Sign:_____Date:_____

The above described work will be done under all the safety precautions mentioned as under during the currency of the Permit.

No.	Item	Yes	Not required / Remarks
1.	Has the equipment been Isolated from Power/Steam/Air?		
2.	Has the equipment been Isolated from liquid or gases?		
3.	Has the equipment been de-pressurized &/or drained?		
4.	Has the equipment been Blanked/blinded or disconnected?		
5.	Has the equipment been water flushed &/or steamed?		
6.	Whether man ways open and ventilated?		
7.	Whether constant Inert gas flow arranged?		
8.	Whether mechanically ventilated and adequately cooled?		
9.	Whether 24 V lighting provided inside the confined space?		
10.	Whether Radiation sources removed?		
11.	Whether training on confined space provided to the individual / group?		
12.	Whether required PPEs (hand gloves, goggles, face shield, ear plug/muff, protective clothing etc.) used?		
13.	Whether Safety harness and Lifeline used?		
14.	Whether Dust/Gas/Air Line mask used?		
15.	Whether attendant with SCBA/Air mask available?		
16.	Whether grounded air Exhaust/Blower/ AC provided?		
17.	Whether Personal Gas alarm provided?		
18.	Whether communication Equipment Provided?		
19.	Whether rescue equipment/team available?		
20.	Whether firefighting arrangement done		
21.	Any other Precautions or Permits required (Height Work, Confined Space etc.), give details and attach		

Declaration: ***All the points mentioned in the above checklist have been checked and found OK***

Permit Receiver:

Site Engineer (Sub- Contractor):	
Signature:	
Name:	Designation:

Site Safety Officer (Sub-Contractor):	
Signature:	
Name:	Designation:

Permit Issuer:

Engineer of Concerned Execution Department (BHEL):	
Signature:	
Name:	Designation:

Site Safety Officer (BHEL):	
Signature:	
Name:	Designation:

Package-in-charge (BHEL):	
Signature:	
Name:	Designation:

Verified by Customer Representative (if applicable), Name: _____***Sign:*** _____***Date:*** _____***Time:*** _____

(* Permit valid for 7 days, subject to daily renewal, and extension as per overleaf instructions / record formats)

Confined Space Work Permit No. & Date: _____

Daily Work Area Condition Endorsement

Sl. No.	Date	Signature with Date & Time		Remarks
		Agency Safety	BHEL Safety	
Day 2				
Day 3				
Day 4				
Day 5				
Day 6				
Day 7				

Permit Extension Beyond Initially Requested Hours

Sl. No.	Extension Period		Remarks	Signature with Date & Time			
	From……. (Date & Time)	To…… (Date &Time)		Agency Site Engineer	Agency Safety Officer	BHEL Site Engineer (PIA)	BHEL Safety Officer
1.							
2.							
3.							
4.							
5.							
6							

TO BE SIGNED BY THE BHEL HSE & EXECUTION AFTER THE WORK IS OVER	
Permit is here by returned after completing the job & ensuring safe removal of men and material.	
Site Engineer, BHEL	**Site HSE Engineer, BHEL**
Signature:	Signature:
Name:	Name:

General Instructions:

1	This Permit is required for all confined space tasks, where injury can happen due to lack of oxygen, or chances of fire are there due to gas accumulation.
2	This permit must be available at the work site all the times of the work.
3	Location and description of the work must be clearly indicated by the permittee.
4	Terms applicable must be clearly indicated by the permittee.
5	This permit shall be endorsed each day after checking all the compliance jointly by the contractor and BHEL safety.
6	Permit shall be issued for not more than **7 days** including the issue date.
7	Permit shall be returned to the HSE Department of BHEL after completion of the job.
8	Before engaging anybody to work, competency and fitness to be ensured.
9	All safety precautions to be taken as per work site HSE plan.
10	**Distribution of copy:**
	Original- Permittee, Duplicate –Department HOS, Contractor, Triplicate - Site HSE Dept.,

HSEP:14-FP04

EXCAVATION WORK PERMIT	Permit No. & Date
Project & Unit:	Emergency Contact Nos:
BHEL Sub-contractor:	

Exact Location of Work:_____

Nature / Description of Work:_____

Duration of Work Execution *: From Date:_____to Date:_____Daily from _____ hrs. to _____hrs.

Name of Sub-Contractor Performing the Work: _____

Name of Sub-Contractor's Site Engineer (Permit Requesting Authority):_____Sign:_____

Name of Sub-Contractor's Package In-charge:_____Sign:_____Date:_____

The above described work will be done under all the safety precautions mentioned as under during the currency of the Permit.

No.	Item	Yes	Not required / Remarks
1	Precautions taken for Underground Electrical Cable		
2	Precautions taken for Under / Above ground sewer/Drinking Water Line		
3	Precautions taken for Underground Telecommunication Line		
4	Precautions taken for Underground Product/Utility Line		
5	Precautions taken for Underground Fire Water Line		
6	Shoring / Shuttering / Sheet piling done to prevent collapse of excavation walls. Strength of Excavation wall ensured at all times		
7	Hard Barricading & Edge Protection provided		
8	Separate Safe Access for Man and Vehicle		
9	Lighting arrangement		
10	Banks Man Provided		
11	Required basic PPEs provided		
12	Slope Cutting/Benching Maintained		
13	Excavated soil / Construction Material / equipment kept away from the edge.		
14	First aid in attendance.		
15	Any other Precautions or Permits required (Height Work, Confined Space etc.), give details and attach		

Declaration: ***All the points mentioned in the above checklist have been checked and found OK***

Permit Receiver:

Site Engineer (Sub- Contractor):		**Site Safety Officer (Sub-Contractor):**	
Signature:		Signature:	
Name:	Designation:	Name:	Designation:

Permit Issuer:

Engineer of Concerned Execution Department (BHEL):		**Site Safety Officer (BHEL):**	
Signature:		Signature:	
Name:	Designation:	Name:	Designation:

Package-in-charge (BHEL):	
Signature:	
Name:	Designation:

Verified by Customer Representative (if applicable), Name: _____***Sign:*** _____***Date:*** _____***Time:*** _____

(* Permit valid for 7 days, subject to daily renewal, and extension as per overleaf instructions / record formats)

Excavation Work Permit No. & Date: _____

Daily Work Area Condition Endorsement

Sl. No.	Date	Signature with Date & Time		Remarks
		Agency Safety	BHEL Safety	
Day 2				
Day 3				
Day 4				
Day 5				
Day 6				
Day 7				

Permit Extension Beyond Initially Requested Hours

Sl. No.	Extension Period		Remarks	Signature with Date & Time			
	From……. (Date & Time)	To…… (Date &Time)		Agency Site Engineer	Agency Safety Officer	BHEL Site Engineer (PIA)	BHEL Safety Officer
1.							
2.							
3.							
4.							
5.							
6							

TO BE SIGNED BY THE BHEL HSE & EXECUTION AFTER THE WORK IS OVER	
Permit is here by returned after completing the job & ensuring safe removal of men and material.	
Site Engineer, BHEL	**Site HSE Engineer, BHEL**
Signature:	Signature:
Name:	Name:

General Instructions:

1	This Permit is required for all excavation tasks 1.22 mtr or deeper
2	This permit must be available at the work site all the times of the work.
3	Location and description of the work must be clearly indicated by the permittee.
4	Terms applicable must be clearly indicated by the permittee.
5	This permit shall be endorsed each day after checking all the compliance jointly by the contractor and BHEL safety.
6	Permit shall be issued for not more than **7 days** including the issue date.
7	Permit shall be returned to the HSE Department of BHEL after completion of the job.
8	Before engaging anybody to work, competency and fitness to be ensured.
9	All safety precautions to be taken as per work site HSE plan.
10	**Distribution of copy:**
	Original- Permittee, Duplicate –Department HOS, Contractor, Triplicate - Site HSE Dept.,

HSEP:14-FP05

RADIATION WORK PERMIT	Permit No. & Date
Project & Unit:	Emergency Contact Nos:
BHEL Sub-contractor:	

Exact Location of Work:_____

Nature / Description of Work:_____

Duration of Work Execution *: From Date:_____to Date:_____Daily from _____ hrs. to _____hrs.

Name of Sub-Contractor Performing the Work: _____

Name of Sub-Contractor's Site Engineer (Permit Requesting Authority):_____Sign:_____

Name of Sub-Contractor's Package In-charge:_____Sign:_____Date:_____

The above described work will be done under all the safety precautions mentioned as under during the currency of the Permit.

No.	Item	Yes	Not required / Remarks
1.	All the persons at the site informed/removed from the area.		
2.	Area around the source of radiation cordoned off with the rope/chord.		
3.	Radiation warning symbol/boards displayed around radiography work on rope/chord.		
4.	Radiographer worn radiation badges during testing and is within safe limits.		
5.	Radiography camera and carrying case box having radiation symbol.		
6.	Radiation Survey Meter is in working condition, calibrated & within validity period.		
7.	Radiographer has valid certificate from BARC.		
8.	Blinking light provided on road during radiography (in dark hours).		
9.	Proper required Illumination provided		
10.	Safe access and working platform provided to conduct RT work		
11.	All the persons involved in Radiography work are aware of the hazard of radiation		
12.	Any other Precautions or Permits required (Height Work, Confined Space etc.), give details and attach		

Declaration: ***All the points mentioned in the above checklist have been checked and found OK***

Permit Receiver:

Site Engineer (Sub- Contractor):	
Signature:	
Name:	Designation:

Site Safety Officer (Sub-Contractor):	
Signature:	
Name:	Designation:

Permit Issuer:

Engineer of Concerned Execution Department (BHEL):	
Signature:	
Name:	Designation:

Site Safety Officer (BHEL):	
Signature:	
Name:	Designation:

Package-in-charge (BHEL):	
Signature:	
Name:	Designation:

Verified by Customer Representative (if applicable), Name: Sign: Date: Time:

(* Permit valid for 7 days, subject to daily renewal, and extension as per overleaf instructions / record formats)

Radiation Work Permit No. & Date: _____

Daily Work Area Condition Endorsement

Sl. No.	Date	Signature with Date & Time		Remarks
		Agency Safety	BHEL Safety	
Day 2				
Day 3				
Day 4				
Day 5				
Day 6				
Day 7				

Permit Extension Beyond Initially Requested Hours

Sl. No.	Extension Period		Remarks	Signature with Date & Time			
	From……. (Date & Time)	To…… (Date &Time)		Agency Site Engineer	Agency Safety Officer	BHEL Site Engineer (PIA)	BHEL Safety Officer
1.							
2.							
3.							
4.							
5.							
6							

TO BE SIGNED BY THE BHEL HSE & EXECUTION AFTER THE WORK IS OVER	
Permit is here by returned after completing the job & ensuring safe removal of men and material.	
Site Engineer, BHEL	**Site HSE Engineer, BHEL**
Signature:	Signature:
Name:	Name:

General Instructions:

1	This Permit is required for all activities in which there is danger of exposure to harmful radiation
2	This permit must be available at the work site all the times of the work.
3	Location and description of the work must be clearly indicated by the permittee.
4	Terms applicable must be clearly indicated by the permittee.
5	This permit shall be endorsed each day after checking all the compliance jointly by the contractor and BHEL safety.
6	Permit shall be issued for not more than **7 days** including the issue date.
7	Permit shall be returned to the HSE Department of BHEL after completion of the job.
8	Before engaging anybody to work, competency and fitness to be ensured.
9	All safety precautions to be taken as per work site HSE plan.
10	**Distribution of copy:**
	Original- Permittee, Duplicate –Department HOS, Contractor, Triplicate - Site HSE Dept.,

HSEP:14-FP06

LIFTING ACTIVITY WORK PERMIT	Permit No. & Date
Project & Unit:	Emergency Contact Nos:
BHEL Sub-contractor:	

Exact Location of Work:_____

Nature / Description of Work:_____

Duration of Work Execution *: From Date:_____to Date:_____Daily from _____ hrs. to _____hrs.

Name of Sub-Contractor Performing the Work: _____

Name of Sub-Contractor's Site Engineer (Permit Requesting Authority):_____Sign:_____

Name of Sub-Contractor's Package In-charge:_____Sign:_____Date:_____

The above described work will be done under all the safety precautions mentioned as under during the currency of the Permit.

No.	Item	Yes	Not required / Remarks
1.	Crane used for lifting activity TPI tested, certified and approved for rated lifting		
2.	All lifting tackles, gears/appliances are tested and certified for lifting works.		
3.	Crane operator is trained and competent for lifting operation.		
4.	Lifting sling/ belt is protected against sharp edge of the jobs to be lifted.		
5.	Lifting hook is properly latched to prevent material falling over		
6.	Access and exit marked and without obstruction.		
7.	In case of lifting multiple materials at once, same are tied up with strong rope / material		
8.	Area below lifting activity barricaded to prevent movement		
9.	Minimum 2 guidelines have been provided for balancing and guiding jobs to be lifted.		
10.	Periphery area of crane booms as well as lifting job is barricaded and unauthorized/no-entry sign board posted.		
11.	Rigger and signal man is trained and competent for lifting work. Signal is clearly visible to the operator and understood		
12.	No lifting activity to be carried out during lightening, heavy wind/rain. No forecast of these conditions during work period		
13.	If scaffolding to be used during lift, scaffolding with valid tag available for use.		
14.	Add drawing /procedure etc. relevant for the lifting.		
15.	Any other Precautions or Permits required (Height Work, Confined Space etc.), give details and attach		

Declaration: ***All the points mentioned in the above checklist have been checked and found OK***

Permit Receiver:

Site Engineer (Sub- Contractor):	
Signature:	
Name:	Designation:

Site Safety Officer (Sub-Contractor):	
Signature:	
Name:	Designation:

Permit Issuer:

Engineer of Concerned Execution Department (BHEL):	
Signature:	
Name:	Designation:

Site Safety Officer (BHEL):	
Signature:	
Name:	Designation:

Package-in-charge (BHEL):	
Signature:	
Name:	Designation:

Verified by Customer Representative (if applicable), Name: _____***Sign:*** _____***Date:*** _____***Time:*** _____

(* Permit valid for 7 days, subject to daily renewal, and extension as per overleaf instructions / record formats)

Lifting Activity Work Permit No. & Date: _____

Daily Work Area Condition Endorsement

Sl. No.	Date	Signature with Date & Time		Remarks
		Agency Safety	BHEL Safety	
Day 2				
Day 3				
Day 4				
Day 5				
Day 6				
Day 7				

Permit Extension Beyond Initially Requested Hours

Sl. No.	Extension Period		Remarks	Signature with Date & Time			
	From……. (Date & Time)	To…… (Date &Time)		Agency Site Engineer	Agency Safety Officer	BHEL Site Engineer (PIA)	BHEL Safety Officer
1.							
2.							
3.							
4.							
5.							
6							

TO BE SIGNED BY THE BHEL HSE & EXECUTION AFTER THE WORK IS OVER	
Permit is here by returned after completing the job & ensuring safe removal of men and material.	
Site Engineer, BHEL	**Site HSE Engineer, BHEL**
Signature:	Signature:
Name:	Name:

General Instructions:

1	This Permit is required for all Heavy Lifting Activities that are either / all of the following: 1. Above 50 Tons; 2. Tandem Lifting; 3. Total Load exceeding 75%of capacity of crane; 4. Lift of unusual difficulty or geometry or rigging; 5. Lift over operating Units; 6. Any other Lift as decided by Site HSE / Erection
2	Job Safety Analysis (**JSA**) to be created for every Lift above 5 Tons.
3	This permit must be available at the work site all the times of the work.
4	Location and description of the work, and terms applicable must be clearly indicated by the permittee.
5	This permit shall be endorsed each day after checking all the compliance jointly by the contractor and BHEL safety.
6	Permit shall be issued for not more than **7 days** including the issue date.
7	Permit shall be returned to the HSE Department of BHEL after completion of the job.
8	Before engaging anybody to work, competency and fitness to be ensured.
9	All safety precautions to be taken as per work site HSE plan.
10	**Distribution of copy:** Original- Permittee, Duplicate –Department HOS, Contractor, Triplicate - Site HSE Dept.

HSEP:14-FP07

LOCKOUT/TAGOUT *(LIVE ELECTRICAL MAINTENANCE)* WORK PERMIT	Permit No. & Date
Project & Unit:	**Emergency Contact Nos:**
BHEL Sub-contractor:	

Exact Location of Work:_____

Nature / Description of Work:_____

Duration of Work Execution *: From Date:_____to Date: _____Daily from _____ hrs. to _____hrs.

Name of Sub-Contractor Performing the Work: _____

Name of Sub-Contractor's Site Engineer (Permit Requesting Authority):_____Sign:_____

Name of Sub-Contractor's Package In-charge:_____Sign:_____Date:_____

The above described work will be done under all the safety precautions mentioned as under during the currency of the Permit.

Tag No.	Device to be Tagged / Locked I.D. No.	Device Location	Device Position *OPEN / CLOSED - ON/OFF*	Lock No.	Tag Lock Placed by Name/Sign - Date/Time		Tag / Lock Removed by Name/Sign - Date/Time	

Declaration: ***All the points mentioned in the above checklist have been checked and found OK***

Permit Receiver:

Site Engineer (Sub- Contractor):	
Signature:	
Name:	Designation:

Site Safety Officer (Sub-Contractor):	
Signature:	
Name:	Designation:

Permit Issuer:

Engineer of Concerned Execution Department (BHEL):	
Signature:	
Name:	Designation:

Site Safety Officer (BHEL):	
Signature:	
Name:	Designation:

Package-in-charge (BHEL):	
Signature:	
Name:	Designation:

Verified by Customer Representative (if applicable), Name: _____***Sign:*** _____***Date:*** _____***Time:*** _____

(* Permit valid for 7 days, subject to daily renewal, and extension as per overleaf instructions / record formats)

Lockout/Tagout Work Permit No. & Date: _____

Daily Work Area Condition Endorsement

Sl. No.	Date	Signature with Date & Time		Remarks
		Agency Safety	BHEL Safety	
Day 2				
Day 3				
Day 4				
Day 5				
Day 6				
Day 7				

Permit Extension Beyond Initially Requested Hours

Sl. No.	Extension Period		Remarks	Signature with Date & Time			
	From……. (Date & Time)	To…… (Date &Time)		Agency Site Engineer	Agency Safety Officer	BHEL Site Engineer (PIA)	BHEL Safety Officer
1.							
2.							
3.							
4.							
5.							
6							

TO BE SIGNED BY THE BHEL HSE & EXECUTION AFTER THE WORK IS OVER	
Permit is here by returned after completing the job & ensuring safe removal of men and material.	
Site Engineer, BHEL	**Site HSE Engineer, BHEL**
Signature:	Signature:
Name:	Name:

General Instructions:

1	This Permit is required for all maintenance and erection activities with danger of electrocution from Live Electric Power
2	This permit must be available at the work site all the times of the work.
3	Location and description of the work, and terms applicable must be clearly indicated by the permittee.
4	This permit shall be endorsed each day after checking all the compliance jointly by the contractor and BHEL safety.
5	Permit shall be issued for not more than **7 days** including the issue date.
6	Permit shall be returned to the HSE Department of BHEL after completion of the job.
7	Before engaging anybody to work, competency and fitness to be ensured.
8	All safety precautions to be taken as per work site HSE plan.
9	**Distribution of copy:** Original- Permittee, Duplicate –Department HOS, Contractor, Triplicate - Site HSE Dept.

	POWER SECTOR	FORMAT NO: **HSEP:14-F01** REV NO.: 00 PAGE NO. 01 OF 02
	Inspection of First Aid Box	

Name of Site :	
Name of Sub-Contractor:	
Inspected by :	
Date of Inspection:	

Number of employees in the site: -_____

Sl. No.	Item	No. Available	Remarks
1	No. of small sterilized dressings		
2	No of medium sized sterilized dressings		
3	No of large sized sterilized dressings.		
4	No of large sized sterilized burn dressings		
5	No of (15 grams) packets sterilized cotton wool		
6	No of pieces of sterilized eye pads in separate sealed packets.		
7	No of roller bandages 10 cm wide.		
8	No of roller bandages 5 cm wide.		
9	Whether tourniquet available		
10	Whether supply of suitable splints available.		
11	No of packets of safety pins.		
12	Whether kidney tray available		
13	Whether sufficient number of eye wash bottles, filled with distilled water or suitable liquid, clearly indicated by a distinctive sign which shall be visible at all times, available.		
14	Whether 4%-xylocaine eye drops, and boric acid eye drops and soda by carbonate eye drops available.		
15	Whether (60ml) bottle containing a two percent alcoholic solution of iodine available		
16	Whether (two hundred ml) bottle of mercurochrome (2 per cent) solution in water available.		
17	Whether 120ml bottle containing Sal volatile having the dose and mode of administration indicated on the label,		
18	Whether roll of adhesive plaster (6 cm X 1 meter) available		

Sl. No.	Item	No. Available	Remarks
19	No of rolls of adhesive plaster (2 cm X 1 meter)		
20	Whether snake bite lancet available.		
21	Whether (30 grams) bottle of potassium permanganate crystals available.		
22	Whether a pair scissors available		
23	Whether copy of the First-Aid leaflet issued by the Director-General, Factory Advice service and labor Institutes, Government of India available.		
24	Whether bottle containing 100 tablets (each of 5 grains) of aspirin available		
25	Whether Ointment for burns available		
26	Whether bottle of a suitable surgical anti-septic solution available		
27	Whether List of Contents pasted on First Aid Box along with respective expiry dates		

Signature of Subcontractor's Site I/C **Date:**

	POWER SECTOR	FORMAT NO: **HSEP:14-F02**
	Health Check-Up	REV NO.: 00 PAGE NO. 01 OF 02

Name of Site :	
Name of Sub-Contractor:	
Name of Employee :	
Age:	

History Of Past Illness	H/O Epilepsy:
	H/O Drug Allergy:
	H/O Diabetics/ Hypertension:
	H/O Unconsciousness:
Personal History	

EXAMINATION	**OBSERVATION**	
General Physical Examination		
Height		
Weight		
BMI		
Built And nourishment		
Pallor		
Temperature		
Chest Expansion	Inspiration	Expansion
Lymph Node Enlargement		
Upper Limbs Strength & Function		
Lower Limbs Strength & function		
Spine Adequately flexible for the job concerned (Yes/No)		
Mental alertness and stability with good eye, hand and foot co-ordination.		
Ear, Nose, Throat		
Ear / Hearing		
Nose		
Throat		
Vision		
Left Eye	Right Eye	

EXAMINATION	OBSERVATION	
Cardiovascular System Examination		
Inspection		
Palpation	Pulse	BP
Auscultation (Heart Sounds)		
Respiratory System		
Inspection	Respiratory Rate	
Palpation:		
Percussion		
Auscultation (Breath Sounds)		
Examination of Abdomen		
Inspection		
Palpation		
Auscultation (Bowel Sounds)		
Any Other		
Clinical Impression		

Signature of the examining doctor **Date:**

	POWER SECTOR	FORMAT NO: **HSEP:14-F03**
	HSE Induction / Regular / On-the-Job Training Records	REV NO.: 02 PAGE NO. 01 OF 01

Name of Site :						
Name of Sub-Contractor :						
Date of Training (dd/mm/yyyy) :		**Duration (Hrs)**				
		From		**To**		
Name & Details of Trainer:						
Subject of Training	**Induction**		**On-The-Job Training (Give details)**			
Name of Training Co-ordinator:						

Sl. No.	Name	Designation	Organization	Signature

I certify that Training has been carried out as per HSEP04: HSE Procedure for Training & Awareness

Signature of Training Coordinator **Date:**

	POWER SECTOR	FORMAT NO: **HSEP:14-F04** REV NO.: 00 PAGE NO. 01 OF 01
	Toolbox Talk	

Name of Site :	
Sub-Contractors Name :	
Date :	

Topic	**Name of person delivered Tool Box Talk**	**No. of Participants attended**	**Remarks**

Signature of Site I/C of Subcontractor **Date:**

	POWER SECTOR	FORMAT NO: **HSEP:14-F05** REV NO.: 00 Page 01 of **6**
	Monthly Site HSE Report	

Name of subcontractor:	**Report Month:**

A) Accidents/Incidents Details: -

a	**Lost time in Accidents**	**No. of incidents**	**Man Hours Lost**	**No. of People Involved**	**No. of person reported to Govt.**		
	For the Month						
	Cumulative						
b	**Minor Injuries**						
	For the Month						
	Cumulative						
c	**Fires**	**No. of Near-Misses**	**No. of First- Aid cases**	**No. of persons injured**	**No. of equipment damaged**	**No. of Fire reported Outside**	
	For the Month						
	Cumulative						
d	**Other mishaps not covered in a, b, c.**	**No. of Near-Misses**	**No. of First- Aid cases**	**No. of persons injured**	**No. of equipment damaged**	**Total near misses and First-Aid**	
	For the Month						
	Cumulative						

B) Data for Man-hours worked:

Details	**Value**	**Remarks if any**
No. of people		
Man Hours worked		
O.T. Hours		
Total Man Hours		
Grand Total of man hours worked during the month(A+B)		
Cumulative man-hours (from_____to_____): **(Since commencing of operations)**		

Signature of Subcontractor Site In-charge **Signature of Subcontractor HSE Officer**

C) Status of Deployment of Work force, Safety Officers/Supervisors & Construction Medical Officer(s) & Electricians:

Description	Name	Qualification & Experience
Safety Officers		
Safety Supervisors		
Construction Medical Officer		
Nursing Staff.		
Electricians		
Scaffolding Inspectors		
T&P Inspectors		

D) Status of deployment of manpower for critical HSE activities:

(All height work and other hazardous activities to be actively supervised by trained personnel. Area to be divided in manageable sections to ensure effective supervision at all times. For example, multiple elevations in a structure can be divided among multiple supervisors)

Activity	Location	Shift Timings	Personnel deployed	Remarks
Height Work	Boiler Unit- (Level 1-3)			
	Boiler Unit- (Level 4-6)			
	ESP			
Housekeeping	Boiler Unit-			
	ESP Unit			
Others				

Signature of Subcontractor Site In-charge **Signature of Subcontractor HSE Officer**

E) Lifting Tools, Tackles, Equipment and Pressure Vessels:

Item	Nos. Deployed	Nos. Tested by competent person	Identification Nos. (Comma separated) (A)	Validities of Test Certificates (Comma separated – corresponding to column A)	Whether internal testing using Color Coding or similar system done
Winches					
Chain Blocks					
Wire Rope Slings					
Man Cages					
D-Shackles					
Air Compressors					
Crawler Cranes					
Mobile Cranes					
Hydra Cranes					
Hydraulic Jack					
Others					

F) Reverse Horns in Construction Vehicles:

Item	Nos. Deployed with serial numbers (Comma separated) (A)	Nos. Having Functional reverse horns	Inspection Dates (Comma separated corresponding to column A)
Transit Mixers			
Hydra Cranes			
Dumpers/Trippers			
Backhoes			
Other Vehicles			

G) ELCBs:

No. Of ELCBs provided with Serial Nos. (Comma separated) (A)	Nos. Functional	When They were last Tested (Comma separated corresponding to column A)

H) Electrical Earthing:

No. Of Earth resources with serial numbers and locations (Comma separated) (A)	Whether Double Earthing provided to all equipment	When they were last tested (Comma separated corresponding to column A)

I) Fire Extinguishers

Name & designation of person responsible for maintenance of Extinguishers at different locations :(Individual subcontractor's Safety Officers).

A. FIRE EXITINGUISHERS AT ERECTION SITE:

Type (Add more rows if required)	Sizes	Qty + Serial numbers (Comma separated) (A)	Healthiness – Last checked dates (Comma separated corresponding to column A)	Locations (Comma separated corresponding to column A)
FOAM TYPE				
SODA TYPE				
DRY TYPE (DCP)				
C02 TYPE				

B. FIRE EXTINGUISHERS AT SITE OFFICES & STORES:

Type	Size (Add more rows if required)	Qty + Serial numbers (Comma separated) (A)	Healthiness – Last checked dates (Comma separated corresponding to column A)	Locations (Comma separated corresponding to column A)
FOAM TYPE				
SODA TYPE				
DRY TYPE (DCP)				
C02 TYPE				

J) Tie-Ups with Emergency Services

Service (Add more rows if required)	Name, location & distance from site	Emergency contact details	Remarks
Hospital with ICU and facilities for orthopedic, neurological etc. trauma			
Fire services			
Others:			

K) Implementation of Checklist, Work Permits:

Item	Numbers During the Month	Major Deviations
Note:- Please attach photocopies of all filled Checklists & Work permits for that month.		

L) Personal Protective Equipment Issued (Extend table for each subcontractor):

Item	Issued this Month	Nos. Issued up to the Month	Percentage of usage at Site (as per physical verification)
Name of subcontractor:			
Safety Helmet			
Safety Shoes			
Full Body Harness			
Fall Arrestor			
Safety Nets			
Hand Gloves			
Face shield			
Welder shield			
Nose Mask			
Reflective Jacket			
Other PPEs.			

M) Safety Observations by Subcontractor Executives- Observations package wise:

Topic	Date Of Programme	No. Of Participants	Level Of Participants

- **Tool-Box talks on Safety:**

Date	Tool Box Talk - No of Participants	Topic	Remarks

- **Safety Induction Trainings:**

Date	Safety Induction No. of Participants	Topic	Remarks

Signature of Subcontractor Site In-charge **Signature of Subcontractor HSE Officer**

N) Progress of Management Programmes at Site

SL	Description Of MPs	Annual Plan	Achievement In This Month	Cumulative Achievement
A. Environment Improvement Programme				
1	Plantation of Trees			
2	Installation of Scrap Bins			
3	Chemical Storage & Handling system			
B. Improvement of Working Environment				
4	Increasing LTI free days			
5	Air Quality Monitoring			
6	Water Quality Monitoring			
7	Illumination level Monitoring			

O) HR Information:

Designation	Total No. Inducted	Total no. of Induction Balance	Total no. of Gate Pass Issued	Total no. of Gate Pass Balance	Total no. of Gate Pass Cancelled	Medical Checkup Completed	Medical Checkup Balance

P) Rewards on Account of Good Safety Performance

Serial Number	Reward Issued to	Details of Reward Issued (Amount etc.)	Brief Reason
Note: Photos of Reward Functions to be attached			

Q) Other Safety initiatives / Safety Activities conducted (with photos, if any):

Signature of Subcontractor Site In-charge **Signature of Subcontractor HSE Officer**

	POWER SECTOR	FORMAT NO: **HSEP:14-F06** REV NO.: 00 PAGE NO. 01 OF 01
	Personal Protective Equipment Inspection	

Name of Site :	
Name of Sub-Contractor :	
Inspected by :	
Date of Inspection:	

Item	Total Checked	Numbers Found in Order	Remarks
Safety Helmet			
Safety Shoes			
Full Body Harness			
Fall Arrestor			
Safety Nets			
Hand Gloves			
Face shield			
Welder shield			
Nose Mask			
Reflective Jacket			
Other PPEs (Specify)			

Signature of Site I/C of Subcontractor: **Date:**

	POWER SECTOR	FORMAT NO: **HSEP:14-F06** REV NO.: 00 PAGE NO. 01 OF 1
	Format for Register of Issue and Receipt of PPEs	

Site:

Subcontractor:

S.N	Name of Person	Details of PPE(s) Issued (with Serial Numbers)	Date Issued	Receiver's Signature	Issuer's Name & Designation	PPE's verified OK / Remarks	Issuer's Signature

	POWER SECTOR Inspection Of T&Ps	FORMAT NO: **HSEP:14-F07** REV NO.: 00 PAGE NO. 01 OF 01

Name of Site :	
Name of Sub-Contractor :	
Date of Inspection :	

Sl.No.	**Description**	**Remarks**
1.0	Name of equipment	
2.0	Basic Information of equipment	
2.1	Specification	
2.2	Sr. No. of equipment	
2.3	Make	
2.4	Year of manufacture	
3.0	Major repairs / overhauls(Furnish details of work carried out)	Date(s) of major repair/overhaul
3.1		
3.2		
3.3	Repairs carried out at site	
4.0	Any performance test conducted	Yes/No
5.0	Document Submitted	Yes/No
6.0	Manufacturer's test / guarantee certificate	Available/ Not available
7.0	Performance test	Done/ Not Done
8.0	Acceptance Norms	
9.0	Committee Observations	
10.0	Date of next review (if accepted)	

Signature-Subcontractor HSE Officer	**Signature-Subcontractor Site In-charge**

	POWER SECTOR	FORMAT NO: **HSEP:14-F08** REV NO.: 00 PAGE NO. 01 OF 01
	Inspection Of Cranes	

Name of Site :	
Name of Sub-Contractor :	
Inspected by :	
Date of Inspection:	

Crane Reg. No (Make/Model) _____

Name of Driver/Operator _____

Sl.no.	Description	Observation	Measures
1	Valid Driving license		
2	Hook & Hook Latch		
3	Over Hoist limit switch		
4	Boom limit switch		
5	Boom Angle Indicator		
6	Boom limit cutoff switch		
7	Condition of Boom		
8	Condition of ropes		
9	Number of load lines		
10	Size and condition of the slings		
11	Stability of the cranes		
12	Soil Condition		
13	Swing Break And Lock		
14	Proper Break And Lock		
15	Hoist Break And Lock		
16	Boom Break And Lock		
17	Main Clutch		
18	Leakage in Hydraulic Cylinders		
19	Out riggers filly extendable		
20	Tyre pressure		
21	Condition of Battery And Lamps		
22	Guards of moving and rotating parts		
23	Load chart provided		
24	Number and position of pedant ropes		
25	Reverse Horn		
26	Load Test Details		
27	Operator's fitness		
28	Pollution under control certificate		
29	Fire extinguisher of appropriate type.		
30	Training of the operator		

Signature of Site I/C of Subcontractor: **Date:**

	POWER SECTOR	FORMAT NO: **HSEP:14-F09** REV NO.: 00 PAGE NO. 01 OF 01
	Inspection Of Winches	

Name of Site :	
Name of Sub-Contractor :	
Inspected by :	
Date of Inspection:	

Winch Reg. No (Make/Model) _____

Name of Operator _____

Sl. No.	Description	YES	NO	NA	Remarks
1	Has the copy of Third Party Inspection certificate been provided in winch machine shed?				
2	Is safe operating instructions displayed near winch?				
3	Is winch machine operator experienced enough to operate the winch machine?				
4	Is the winch machine operated by someone other than the winch machine operator?				
5	Is there guard provided in all moving parts like wheel and motor's shaft?				
6	Will it protect against unforeseen operational contingencies?				
7	Are brakes, clutch and locking arrangement working properly?				
8	Has it been ensured that the guard does not constitute a hazard by itself?				
9	Are the cranks and the connecting rods protected by guardrails?				
10	Is there provision for fully covered shed with wooden plank roof?				
11	Is wire rope free from any kind of damage or wear and tear?				
12	Is split pin provided for the protection of clutch and brake locking arrangement?				
13	Is pulley inspected by competent person and certified before use?				
14	Is pulley free from any wear and tear visually?				
15	Is winch rope barricaded with clipsheet for the protection of rope and person?				
16	Is the wire rope lubricated by cardium oil?				
17	Is there any friction in wire rope which may damage the wire rope rather than the rolling parts?				
18	Is there any oil leakage in the hydraulic system of the winch machine?				
19	Has it been ensured that the guard will not cause discomfort or inconvenience to operator?				

Total NO		**Total NA**		**% Compliance**	

Signature of Site I/C of Subcontractor: **Date:**

	POWER SECTOR	FORMAT NO: **HSEP:14-F10** REV NO.: 00 PAGE NO. 01 OF 2
	Inspection of Height Working	

Name of Site :	
Name of Sub-Contractor :	
Inspected by :	
Date of Inspection:	

Sl. No.	Descriptions	Observation (Yes/No)	Remarks
	A. General		
1	All the workers have been explained safe work method?		
2	Adequate illumination has been ensured.		
3	Work area inspected prior to the start of the work.		
4	Is the work area barricaded to prevent fall and platforms are of adequate strength (bamboo, jute / plastic ropes not to be used).		
5	The temporary work platforms & structures for height work including those used in Boiler structures, water walls, ESP, Powerhouse are fully barricaded with railings (as per **IS 3696**)		
6	Fabricated makeshift arrangements are checked for quality and type of material welding, anchoring etc.		
7	Are floor gaps, permanently covered and barricaded		
8	Area below the work place barricaded, particularly below hot work.		
9	Workers provided with bags /box to carry bolts, nuts and hand tools		
10	Arrangement for fastening hand tools made.		
11	All work platforms ensured to be of adequate strength and ergonomically suitable.		
12	Work at more than one elevation at the same segment is restricted.		
13	An established communication system has been established and explained to the workers.		
	B. **Access/Egress**		
1	Walkways provided with handrail, mid-rail and toe guard?		
2	All checkered plates, gratings properly welded/ bolted?		
3	Are ladders inspected and they are in good condition?		
4	Are ladders spliced?		
5	Are ladders properly secured to prevent slipping, sliding or falling?		
6	Stairs erected above and below 1 tier column for safe access?		
7	Do side rails extend 36” above top landing?		

Sl. No.	Descriptions	Observation (Yes/No)	Remarks
8	Are built up ladders constructed of sound materials?		
9	Are rugs and cleats not over 12" on center?		
10	Metal ladders not used around electrical hazards.		
11	Proper maintenance and storage.		
12	Ladders placed at right slope.		
13	Ladders / staircases welded/ bolted properly.		
14	Any obstruction in the stairs.		
15	Are landing provided with handrails, knee rails, toe boards etc.?		
16	Whether ramp is provided with proper slope.		
17	Proper hand rails / guards provided in ramps.		
	C. **Housekeeping**		
1	Walkways, aisles & all overhead workplaces cleared of loose material.		
2	Is any nut bolt/scrap left on beam/column?		
3	Flammable materials, if any, are cleared.		
4	All the de shuttering materials are removed after de shuttering is done.		
5	Platforms and walkways free from oil/grease or other slippery material.		
6	Collected scrap are brought down or lowered down and not dropped from height.		
	D. **PPE And Safety Devices**		
1	Use of safety helmet, safety belts ensured for all workers		
2	Anchoring points provided at all places of work.		
3	Common lifeline provided wherever linear movement at height is required.		
4	Safety nets are use wherever required.		
5	Proper fall arrest system is deployed at critical workplaces.		
6	Crawler boards/Safety system or works on fragile roof are used.		
7	Is man-lift being used for personnel lifting?		
8	Does man basket / personnel lift system has an independent lifeline and all occupants safety harnesses connected to it with rope grab?		

Signature of Site I/C of Subcontractor: **Date:**

	POWER SECTOR	FORMAT NO: **HSEP:14-F11**
	Inspection of Welding and Gas Cutting	REV NO.: 00 PAGE NO. 01 OF 02

Name of Site :	
Name of Sub-Contractor :	
Inspected by :	
Date of Inspection :	

Welding				
Sl.no.	Description	Yes	No	Remarks
1	Is electric connection given through 30 mA ELCB/RCCB to welding m/c?			
2	Is welding machine more than 10 years old?			
3	Is there provision of fuse and is it bypassed?			
4	Is electric cable fitted properly in junction box on m/c?			
5	Is electrical cable free from joints?			
6	Are the joints attached firmly & insulated with tape?			
7	Is double earthing given to body of m/c?			
8	Is the physical condition of the m/c good?			
9	Is ON/OFF switch connected to the m/c is working and in good condition?			
10	Are indication lamps on m/c working?			
11	Is the electrode holder in good condition?			
12	Are the cables of the welding m/c lugged & tight properly?			
13	Is cable to welding machine terminal joint lose / burnt / glowing?			
14	Are return lead connected properly (Rod, Angle, Channels shall not be used)			
	Total No of NO			
	Total No of YES			

Signature of Site I/C of Subcontractor: **Date:**

	POWER SECTOR	FORMAT NO: **HSEP:14-F11** REV NO.: 00 PAGE NO. 02 OF 02
	Inspection of Welding and Gas Cutting	

Gas Cutting				
Sl.no	Description	Yes	No	Remarks
1	Are Cylinders kept on trolleys?			
2	Physical condition of Gas cylinders Good?			
3	Is there Oil/Grease on valve of the cylinder?			
4	Are pressure regulators in good condition?			
5	Condition of hose pipe OK?			
6	Are hose pipe clamped with hose clip?			
7	Is flash back arrestor & NRV fitted on torch both for O2 and LPG cylinder?			
8	Is nozzle of the torch cleaned?			
	Total Number of NO			
	Total No of YES			
	% Compliance			

Signature of Site I/C of Subcontractor: **Date:**

	POWER SECTOR **Inspection Of Electrical Installation**	FORMAT NO: **HSEP:14-F12** REV NO.: 00 PAGE NO. 01 OF 02

Name of Site :	
Name of Sub-Contractor :	
Inspected by :	
Date of Inspection :	

Sr. No.	**Contents**	**Yes/No**	**Remarks**
A	**Cable**		
1.	Whether the condition of cable is checked?		
2.	Are cables received from other sites checked for insulation resistance before putting them into use?		
3.	Are all main cables taken either underground / overhead?		
4.	Are welding cables routed properly above the ground?		
5.	Are welding and electrical cables overlapping?		
6.	Is any improper joining of cables/wires prevailing at site?		
B	**DBs/SDBs**		
1.	Is earth conductor continued up to DB / SDB?		
2.	Whether DBs and extension boards are protected from rain / water?		
3.	Whether DB and extension board have separate MCB/ELCB		
4.	Is there any overloading of DBs / SDBs?		
5.	Are correct / proper fuses & CBs provided at main boards and sub-boards?		
6.	Is energized wiring in junction boxes, CB panels & similar places covered all times?		
C	**ELCB**		
1.	Whether the connections to all equipment are routed through individual ELCBs?		
2.	Is sensitivity of each ELCB maintained at 30 mA?		

Sr. No.	Contents	Yes/No	Remarks
3.	Are the ELCB numbered and tested periodically & test results recorded in a logbook countersigned by a competent person?		
D	**Grounding**		
1.	Is natural earthing ensured at the source of power (main DB at Generator or Transformer)?		
2.	Whether the continuity and tightness of the earth conductor are checked?		
3.	Mention the gauge of the earth conductor used at the site.		
4.	Mention the value of Earth Resistance.		
E	**Electrically operated Machines or Accessories**.		
1.	Whether the plug top is provided everywhere.		
2.	Are all metal parts of electrical equipment and light fittings / accessories grounded / double earthed?		
3.	Is there any shed or cover for welding machines?		
4.	Are halogen lamps fixed at proper places?		
5.	Are portable power tools maintained as per norms?		
6.	Any other information:		

Signature of Site I/C of Subcontractor: **Date:**

	POWER SECTOR **Inspection of Elevator**	FORMAT NO: **HSEP:14-F13** REV NO.: 00 PAGE NO. 01 OF 01

Name of Site :	
Name of Sub-Contractor :	
Inspected by :	
Date of Inspection :	

Sr. No.	**Description**	**Remarks**
1.0	Name of equipment	
2.0	Basic Information of equipment	
2.1	Specification	
2.2	Sr. No. of equipment	
2.3	Make	
2.4	Year of manufacture	
3.0	Major repairs/overhauls(Furnish details of work carried out)	Date(s) of major repair/overhaul
3.1		
3.2		
3.3	Repairs carried out at site	
4.0	Any performance test conducted	Yes/No
5.0	Document Submitted	Yes/No
6.0	Manufacturer's test / guarantee certificate	Available/ Not available
7.0	Performance test	Done/ Not Done
8.0	Acceptance Norms	
9.0	Committee Observations	
10.0	Date of next review (if accepted)	

Signature-Subcontractor/ Subcontractor's Safety Officer **Signature-Site Safety Officer (BHEL)**

	POWER SECTOR HSE Penalty Format	FORMAT NO: **HSEP:14-F14** REV NO.: 00 PAGE NO. 01 OF 2

Sub: MEMO for Penalty for non-compliances in Safety and Fabrication Quality requirement

Following lapse (tick marked) was observed and penalty is imposed as stated at the bottom of this memo. It is requested that such occurrences may please be avoided in future.

S. No	Nature of Non - Compliance	Penalty (in Rs.)	Remarks
	A. PPEs		
1.	Not wearing safety helmet / wearing without chin straps	500	Per Person/ day
2.	Not Wearing safety shoes	500	Per Person/ day
3.	Not wearing gloves, nose masks where required	350	Per Person/ day
4.	Not using grinding goggles while doing grinding operations	500	Per Person/ day
	B. Height Work		
1.	Not providing Lifelines for height work	1000	Per location per day
2.	Not ensuring barricading of working platforms	1000	Per location per day
3.	Not using temporary platform during work at height	1000	Per case per day
4.	Not wearing safety belt while working at height (> 2 meters) or not anchoring to lifeline	2000	Per Person/ day
5.	Not providing proper barricades (caution tape at 2 elevations)	500	Per location per day
	Use of mobile phones by Height worker / Crane / Hydra Operator	1000	Per case per day
	C. Electrical		
1.	Not using 24 V supply for lighting in confined spaces	500	Per case per day
2.	Lack of Electrical Earthing	2000	Per case per day
3.	Improper earthing of welding & Other electrical Machines. Earth resistance not OK	500	Per Machine per incidence
4.	Electrical plug not used for connection/ hand machines	500	Per connection per incidence
5.	Unsafe electrical practice like not installing ELCB/ RCCB	500	Per case per day
6.	Using frayed/ broken welding cables	500	Per machine per week
	D. Lifting		
1.	Use of lifting equipment without having valid Third Party Test certificate	5000	Per equipment per seven days
2.	Lifting hooks without latches	500	Per hook per day
3.	Using damaged slings or not slinging properly	2000	Per event Per T&P
4.	Lifting cylinders without cage or rolling of cylinders	500	Per Event per incidence
5.	Non removal of scrap from platforms	1000	**Per Event Per location per 7 days**
	E. Hot Work / Cylinder Handling		
20.	Gas cutting without flash back arrestor	2000	Per machine per incidence
21.	Gas cutting at height without sheet below	500	Per event
22.	Not keeping gas cylinders vertically / in trolley on ground	500	Per event
23.	Gas cutting with damaged hose pipes	500	Per event
	Not covering welding cylinder with top cover	500	Per event
	F. Construction Vehicles		
24.	Not having valid driving license for the type of vehicle/ T&P	2000	Per driver per event
25.	Two wheeler entry in construction area	500	Per vehicle
26.	Using Hydra for material movement at site in unsafe manner	1000	Per case
27.	Using Two Hydra in Tandem for material movement	2000	Per case
28.	Vehicles, Hydras, Cranes, Dumpers and Earth Movers not having automatic back horns linked to gear	1000	Per Equipment per day
29.	Not using guide rope while moving material using Hydra or Crane	1000	Per event
30.	Violating speed limit during vehicle movement	1000	Per event

	Nature of Non - Compliance	Penalty in Rs.)	Remarks
Engineering / Administrative Controls / General			
31.	Major Accident – Victim not reporting for work within 48 hours – resulting in partial loss in earning capacity & termination / demotion in employment	200000	
32.	Fatal Accident/Accidents Resulting in total Loss in Earning Capacity #	500000	Per victim#
33.	Unsafe Act in violation of standards / clauses of this document	500-5000	Per case
34.	Activity carried out without safety work permit where applicable	2000	Per person per event
35.	Using untrained / unqualified personnel for hazardous work	2000	Per event
36.	Not maintaining proper hygiene in canteen as per BOCW	1000	Per event

 # or as deducted by customer, whichever is higher.

For repeated **major and** fatal incidents under the same subcontractor for the same package in the same Unit, the subcontractor will pay 2 times the penalty compared to previously paid

Details (if any) related to non- compliance (Name of persons, Nature of deficiency, etc.)

Penalty imposed: _____

1, Rate as per above chart_____

2. No. of Persons/ machine/ event/ labor_____

3. Total Penalty= 1. X 2. =_____

BHEL Personnel:

Signatures:

Name_____

Attachments: Photographs & Documentary proof (if available) for violation

Distribution: 1 Copy: to Sub- contractor Site In-charge,
1 Copy to Site Construction Manager (BHEL)

	POWER SECTOR Format for Initial Verification of PPE's & Lifting Tools & Tackles	FORMAT NO: **HSEP:14-F15** REV NO.: 00 PAGE NO. 01 OF 1

Name of Site :	
Name of Sub-Contractor :	
Inspected by :	
Date of Inspection :	

S. No	Particulars (Serial Number, make, model of PPE, T&P)	Accepted / Rejected	Remarks
Checked (Name & Sign. Of Subcontractor HSE Officer)		Verified (Name & Sign. Of Subcontractor Site In-charge)	

	POWER SECTOR **Format for Inspection of Labor Colony**	FORMAT NO: **HSEP:14-F16** REV NO.: 00 PAGE NO. 01 OF 1

Name of Site :	
Name of Sub-Contractor :	
Inspected by :	
Date of Inspection :	

S. No	Particulars	No	Yes	Comments
1	Sufficient living space ensured for each occupant with Kitchen area			
2	Area cleanliness ensured through regular cleaning			
3	Toilet facility sufficient for all occupants available, in order with adequate lighting, cleaned regularly and in hygienic condition			
4	Washing facilities available with adequate water supply			
5	Availability of sufficient drinking water in protected tanks with weekly tank cleaning and source tested annually as per IS10500 ensured			
6	Adequate drainage to remove waste and rain water, no flooding			
7	"Unsafe for Drinking" posted near accessible non-potable water and sources; posted in language of occupants or universal symbol			
8	Prevention of mosquitoes, flies, and rodents in immediate housing area through insecticide sprays if required			
9	Electricity provided & electrical connections safety ensured			
10	Fans, Coolers / Quilts, Heaters provided as required to cater to weather conditions along with adequate electricity supply			
11	Houses Walls and roof tight and solid; floors rigid and durable, with smooth, cleanable finish in good repair			
12	Availability of nominal rate ration / common use items shop within / nearby the colony			
13	Emergency medical plan developed: (A) Potential injuries determined (B) Local EMS response determined (C) Qualified first-aid person on site, if required			
14	Emergency plans posted where employees gather			
15	Transportation to nearest suitable facility			
Any other checks:				
Remarks:		**Name & Sign. Of Subcontractor** **HSE Officer**		

	POWER SECTOR **Format for Recording of First Aid Injuries**	FORMAT NO: **HSEP:14-F17** REV NO.: 00 PAGE NO. 01 OF 1

Name of Site:

Name of Subcontractor:

Date:	Time:	Name of patient:	Subcontractor	Description of injury:	How the injury occurred:	Treatment provided:	First Aider Name:	Initials:	Reportable: Yes/No

	POWER SECTOR	FORMAT NO: **HSEP:14-F18**
	Format for Maintaining Records of E-waste Handled / Generated	REV NO.: 00 PAGE NO. 01 OF 1

(Generated Quantity in Metric Tons (MT) per year)

Site		
Subcontractor		
Date		
Types & Quantity of e-waste handled/generated**	Category	Quantity
	Item Description	
Types & Quantity of e-waste stored	Category	Quantity
	Item Description	
Types & Quantity of e-waste sent to collection center authorized by producer/dismantler/recycler/refurbisher or authorized dismantler/ recycler or refurbisher **	Category	Quantity
	Item Description	
Types & Quantity of e-waste transported*	Category	Quantity
	Item Description	
Name, address and contact details of the destination		
Types & Quantity of e-waste refurbished*	Category	Quantity
	Item Description	
Name, address and contact details of the destination of refurbished materials		
Types & Quantity of e-waste dismantled*	Category	Quantity
Name, address and contact details of the destination	Item Description	
Types & Quantity of e-waste recycled*	Category	Quantity
Types & Quantity of materials recovered	Item Description	
	Quantity	
Name, address and contact details of the destination		
Types & Quantity of e-waste sent to recyclers by dismantlers	Category	Quantity
	Item Description	
Name, address and contact details of the destination		
Types and Quantity of other waste sent to respective recyclers by dismantlers / recyclers of e-waste	Category	Quantity
Name, address and contact details of the destination	Item Description	
Types and Quantity of e-waste treated & disposed	Category	Quantity
	Item Description	
Name, address and contact details of the destination		

Signature of Subcontractor Site In-charge: **Date**

	POWER SECTOR	FORMAT NO: **HSEP:14-F19** REV NO.: 00 PAGE NO. 01 OF 1
BHEL	**Format for Maintaining Records of Hazardous Waste at the Facility**	

1. Name of Site:
2. Name of the Subcontractor:
3. Date:
4. Description of hazardous waste:

Physical form with description	Chemical form	Total volume and weight (in kg.)

5. Description of storage and treatment of hazardous waste:

Date	Method of storage of hazardous wastes	Date	Method of treatment of hazardous wastes

6. Details of transportation of hazardous waste:

Name & address of consignee of package	Mode of packing/of the waste for transportation	Mode of transportation to site of disposal	Date of transportation

7. Details of disposal of hazardous waste:

Date of disposal	Concentration of hazardous material in the final waste form	Site of disposal (identify the location on the relevant layout drawing for reference)	Method of disposal	Persons involved in disposal

8. Data of environmental surveillance:

Date of measurement	Analysis of ground water			Analysis of soil samples			Analysis of air sampling			Analysis of any other samples (give details)
	Location of sampling	Depth of sampling	Data	Location of sampling	Depth of sampling	Data	Location of sampling	Data		

9. Details of the hazardous wastes reused and recycled:

Date	Total quantity of hazardous waste generated	Details of hazardous waste minimization activity	Material received	Final quantity of waste generated	Net reduction in waste generation quantity and percentage

Signature of Subcontractor Site In-charge: **Date:**

	POWER SECTOR	FORMAT NO: **HSEP:14-F20**
	HSE Audit / Inspection Checklist-cum-Compliance Report	REV NO.: 00 PAGE NO. 01 OF 3

PROJECT:_____ CONTRACTOR:_____

DATE:_____ OWNER :_____

INSPECTION BY:_____

Note : write 'NA' wherever the items is not applicable

Item	Yes	No	Remarks	Action
HOUSEKEEPING				
Waste containers provided and used				
Passageways and walkways clear				
General neatness of working area				
Other				
PERSONNEL PROTECTIVE EQUIPTMENT				
Goggles; shields				
Face protection				
Hearing protection				
Respiratory masks etc.				
Safety belts				
Other				
EXCAVATIONS / OPENINGS				
Openings properly covered or barricaded				
Excavations shored				
Excavations barricaded				
Overnight lighting provided				
Other				
WELDING, CUTTING				
Gas cylinders chained upright				
Cable and hoses not obstructing				
Fire extinguisher (s) accessible				
Others				
SCAFFOLDING				
Fully decked platforms				
Guard and intermediate rails in place				
Toe boards in place				
Adequate shoring				
Adequate access				
Others				
LADDER				
Extension side rails 1 m above				
Top of landing				
Properly secured				
Angle + 70^0 from horizontal				
Other				

HOISTS, CRANES AND DERRICKS				
Condition of cables and sheaf OK				
Condition of slings, chains, hooks OK				
Inspection & maintenance log maintained				
Outriggers used				
Signals observed and understood				
Qualified operators				
Others				
MACHINERY, TOOLS & EQUIPMENT				
Proper instruction				
Safety devices				
Proper cords				
Inspection and maintenance				
Other				
VEHICLE AND TRAFFIC				
Rules and regulations observed				
Inspection and maintenance				
Licensed drivers				
Other				
TEMPORARY FACILITIES				
Emergency instructions posted				
Fire extinguishers provided				
Fire-aid equipment available				
General neatness				
Others				
FIRE PREVENTION				
Personnel instructed				
Fire extinguishers checked				
No smoking in prohibited areas.				
Hydrants				
Clearance				
Others				
ELECTRICAL				
Proper wiring				
ELCB's provided				
Ground fault circuit interrupters				
Protection against damage				
Prevention of tripping hazards				
Other				
HANDLING & STORAGE OF MATERIALS				
Properly stored or stacked				
Passageways clear				
Other				
FLAMMABLE GASES AND LIQUIDS				
Containers clearly identified				
Proper storage				
Fire extinguisher nearby				
Other				

WORKING AT HEIGHT				
Safety nets				
Safety belts				
Safety helmets				
Anchoring of safety belt to the life line rope				
ENVIRONMENT				
Lubricant waste/engine oils properly dispose.				
Waste from Canteen, offices, sanitation etc. disposed properly.				
Disposal of surplus earth, stripping materials, expired batteries, oily rags and combustible materials done properly.				
HEALTH CHECKS				
Hygienic conditions at labor camps O.K.				
Availability of first-aid facilities				
Proper sanitation at site, office & labor camps.				
Arrangement of medical facilities.				
Measures for dealing with illness.				
Availability of potable drinking water for workmen & staff.				
Provision of crèches for children.				

Signature of Subcontractor Site In-charge: **Date:**

	POWER SECTOR **Format for Inspection of Illumination / Lux Levels**	FORMAT NO: **HSEP:14-F21** REV NO.: 00 PAGE NO. 01 OF 1

Name of Site :					
Name of Sub-Contractor :					
Inspected by :					
Date of Inspection :					
Details of Lux Meter Used for Illumination Checking					
Serial Number		**Last inspection Date**		**Inspection Due Date**	

S. No	Location	Applicable Lux Value	Measured Lux Value	Comments
1				
2				
3				
4				
5				
6				
7				
8				
9				
10				
11				
12				
13				
14				
15				
Any other checks:				
Remarks:		**Name & Sign. Of Subcontractor HSE Officer**		

	POWER SECTOR **Format for Incident Reporting**	FORMAT NO: **HSEP:14-F22** REV NO.: 00 PAGE NO. 01 OF 2

Type of incident: Fatal/Major//Fire/Property damage (Tick what is applicable)

1	**Name Of Site**			**3**	**Activity Area**		
2	**Scope Of Work**			**4**	**Name Of Contractor**		
				5	**NAME & DESIGNATION OF BHEL ACTIVITY I/C**		
6	**Date & Time Of Accident**			**7**	**Date Resumed**		
8	**No. Of Work-Days Lost by Victim (If Duty Not Resumed, Give Estimated Figure)**						
9	**No. Of Man-hours Lost By Others**						
10	**Personal Details Of Injured and/or Details Of Materials/Equipment/ Property Damaged**						
Name				**Name Of Material / Equipment / Property**			
Period Of Employment							
Age	Yrs.	**Sex**	Male/Female	**Estimated Cost**	**Actual Cost**		
Marital Status		Single/ Married					
Occupation				**Nature Of Damage**			
Part Of Body Injured							
Nature Of Injury							
Agency (Object / Equipment / Substance) Most Responsible For Causing Accident / Injury / Damage							
12	**Person (Name & Designation) With Most Control Over Agency (Object / Equipment / Substance) Causing Accident Injury / Damage**						
13	**Describe Clearly How the Accident Occurred (Use Additional Sheet, If Required)**						

Analysis		
14	**What Acts and/or Conditions Contributed Most Directly to This Accident**	
15	**What Are the Basic Reason for The Existence of These Acts and/or Condition?**	
16	**What Corrective Actions Have Been Taken to Prevent Accident Recurrence?**	
	Date:	**Signature Of Site HSE Coordinator**
17	**Comments of Head/Sox**	
	Date:	**Signature Of Head/SOX**

	POWER SECTOR **Format for Incident Recording**	FORMAT NO: **HSEP:14-F23** REV NO.: 00 PAGE NO. 01 OF 1

Name of the Site									
Name of the Subcontractor									
Sl. No.	**Date & Time**	**Incident Type** (Near Miss /Minor/Major/Fatal/Fire/ Property Damage)	**Incident Location & Details**	**Basic Reason**	**Numbers Injured (Types of Injuries)**	**Sign**	**RCA Done**	**CAPA Details**	**Sign**

SECTION-B

Special Requirements

(Applicable to this Contract Only)

1. **Establishment of Common Facilities for whole Project –** cost to be borne in full by subcontractor.

Table 1.1

S. No.	Item	Details as per Clause No. of this Section	Applicable / Not Applicable with Remarks	Package
1	Construction of Medical Centre	a	Applicable	Civil
2	Construction of Worker Training Centre (A part of safety park)	b	Applicable	Civil
3	Construction of Vertigo Test Structure (A part of safety park)	c	Applicable	Civil
4	Deployment of Specialists	d	Applicable	By concerned agencies
5	HSE Equipment	e	Applicable	By concerned agencies
6	HSE measurement devices	f	Applicable	By concerned agencies
7	Urinals in under-construction structures	g	Applicable	By concerned agencies
8	Safety Park	h	Applicable	Civil

a. MEDICAL CENTRE

i. A medical center shall be setup at site with basic facilities for handling medical emergencies

ii. Deployment of Medical Professional:

   1. **A qualified medical professional shall be deployed at site at all times.**
   2. **When total employee & worker strength at site crosses 500, medical professional with MBBS Degree from recognized institute shall necessarily be deployed**

iii. Ambulance shall be deployed along with a trained driver and accessories as per Schedule V of BOCW Central Rules, 1998. Ambulance shall be utilized exclusively for transporting the accident victim. Ambulance drivers shall be regularly trained in First Aid.

iv. Non deployment of Ambulance and First Aider as above shall invite a penalty of Rs. 30000 pm and Rs10000 PM respectively

v. Medical waste shall be disposed as per prevailing legislation (Bio-Medical Waste – Management and Handling Rules, 1998).

vi. Above are bare minimum requirements. Any legal requirements over and above these specifications shall supersede the above requirements

b. WORKER TRAINING CENTRE

i. Indoor Worker Training Center to be developed at site with seating capacity of at least 50 trainees

ii. Projector with following minimum specifications:

Native Resolution	XGA, 1024x768
Brightness (ANSI lumens)	3300
Contrast Ratio	13000:1
Display Color	30 Bits
Aspect Ratio	4:3

iii. A Laptop or Desktop PC with following minimum specifications:

Processor	Intel Celeron Dual Core
Memory (RAM)	2 GB
Graphics Card	2GB Video Memory
Hard Disk Capacity	60 GB
Monitor Size	14 inches
Keyboard	
Mouse	

iv. Stereo speakers with minimum 50W RMS sound output

v. PA system for Addressing Workers

vi. Seating arrangement

c. Development of Vertigo Test Structure:

Vertigo test Structure to be developed as per **Annexure 04**

d. Specialists:

Following specialists shall be deployed by the subcontractor, who shall cater to whole project as per BHEL requirements / instructions

I. **Qualified T&P Inspector: subcontractor** shall engage one qualified T&P inspector having undergone a certification course in the discipline.

II. **Qualified Scaffolding Erector and Inspector:** Subcontractor shall deploy one qualified Scaffolding Supervisor and Inspector having undergone a certification course in the discipline

e. **Tools & Equipment:** Following equipment conforming to relevant IS Codes for the job shall be ensured by subcontractor:

S. No.	Item
1	Lifelines
2	Retractable Fall Arrestors
3	Safety Nets (10m X 5m)
4	Sky Climbers
5	Fire Blanket
6	Honey Bee Removal Suit & Kit
7	Flashback Arrestors
8	Barricading Tape
9	Binoculars
10	Walkie-Talkies
11	LOTO kit
12	24-Volt light
13	Sand Buckets
14	Hard barricading planks
15	Standby Fire kits

S. No.	Item	Type of Job / Purpose	Remarks
1	Lifelines (Steel Rope) and posts	Height work	
2	Retractable Fall Arrestors	Height Work	
3	Safety Nets (for fall protection; railings also to be covered)	Height Work	
4	Sky Climbers	Height Work	
5	Fire Blanket, Spark/ slag collector	Hot Work	
6	Honey Bee Removal Suit & Kit	General	
7	Flashback Arrestors	Hot work	
8	Barricading –Hard (Scaffolding Pipes & Clamps or fabricated using structural/round	Height Work, Excavation, General Barricading	
9	Binoculars	HSE Inspection	
10	Walkie-Talkies	Lifting	
11	LOTO kit	Working on charged line	
12	24-Volt light	Confined Space/ temp work	
13	Sand and Water Buckets	Hot work/Electrical work	
15	Standby Fire kits Fire extinguisher stands	Hot work/Electrical work	

Above equipment are bare minimum to be essentially maintained at all times. Additional numbers to be deployed as and when required in order to ensure fulfillment of all Safety requirements

f. HSE Measurement Equipment & Tools

S. No	Device
1	ELCB Tester
2	Multi meter (Light cables)
3	Earth Resistance Meter
4	Lux Meter
5	Decibel Meter
6	Anemometer
7	Breath Analyzer (Alcohol)
8	Multi-gas analyzer
9	Gas leakage detector / alarm
10	Gas monitor (confined space)
11	Radiation meter & Badges
12	Blood pressure monitor
13	Fire detectors
14	Dust Particle Detector

g. Urinals in Under-construction structures:

Urinals for in under-construction structures for easy access eg. In case of Boiler elevations etc.

2. **Shared Facilities –** where part of operating cost is borne by subcontractor in proportion to contract value

The subcontractor shall bear running expenses of above facilities on a 'proportional to contract value sharing basis as finalized by BHEL.

S. No.	Facility
1.	Operation of Ambulance, Nurses, Medical Consumables
2.	Construction, Maintenance & Upkeep of Latrines and Urinals in Common spaces
3.	Drinking Water Provision in Common Spaces
4.	Dust Control / Water Sprinkling, Pest Control, Fumigation at Site

LIST OF REFERENCES

S. No	Code Name	Title
1	IS: 818-1888 (Reaffirmed 2003)	Code of Practice for Safety and Health requirements in Electric and Gas Welding and Cutting operations.
2	IS: 1179-1967 (Reaffirmed 2003)	Specification for Equipment for Eye & Face protection during welding.
3	IS: 1989 (Part 2):1986 (Reaffirmed 1997)	Specification for Leather Safety Boots & Shoes
4	IS:2925 – 1984 (Reaffirmed 2010)	Specification for Industrial Safety Helmets
5	IS:3521: 1999 (Reaffirmed 2002)	Industrial Safety Belts & Harnesses-Specification
6	IS:3646(Part II) – 1966(Reaffirmed 2003)	Code of Practice for Interior Illumination
7	IS:3696 (Part I) – 1987 (Reaffirmed 2002)	Safety Code for Scaffolds and Ladders
8	IS: 3696(Part 2) : 1991 (Reaffirmed 2002)	Scaffolds and Ladders-Code of Safety
9	IS: 3764:1992	Excavation Work – Code of Safety
10	IS:3786 – 1983 (Reaffirmed 2002)	Method for Computation of Frequency and Severity Rates for Industrial Injuries and Classification of Industrial Accidents
11	IS.4014.2.1967	Steel tubular Scaffolding
12	IS:4770: 1991 (Reaffirmed 2006)	Rubber Gloves Specification (Electricals Purposes)
13	IS:4912: 1978 (Reaffirmed 2002)	Safety Requirements for Floor and Wall Openings, Railings and Toe Boards
14	IS: 5557 – 1969	Industrial and Safety rubber knee boots.
15	IS: 5983 – 1980 (Reaffirmed 2002)	Specification for Eye-Protectors
16	IS:6519 – 1971 (Reaffirmed 1997)	Code of Practice for Selection, Care and Repair of Safety Footwear
17	IS.6549.1972	Glossary of terms used for Lifting tackles
18	IS:6994(Part I)-1973 (Re affirmed 1996)	Specification for Industrial Safety Gloves Leather and Cotton Gloves
19	IS.7215.1974	Steel Structure Fabrication
20	IS.7969.1975	Handling and storage of building material

21	IS:8519 – 1977 (Reaffirmed 1983)	Guide for Selection of Industrial Safety Equipment for Body Protection.
22	IS:8520 – 1977 (Reaffirmed 2002)	Guide for Selection of Industrial Safety Equipment for Eye, Face and Ear Protection.
23	IS:9167:1979	Specification for Ear-Protectors
24	IS:9473:2002	Respiratory Protective Devices-Filtering Half Masks to protect against Particles-Specification.
25	IS: 9944:1992 (Reaffirmed 2003)	Natural and Man-made Fiber Rope Slings- Recommendations on Safe working loads.
26	IS 11006 : 2011	Flash Back(Flame) Arrestor Specification
27	IS: 11226 – 1985	Leather Safety footwear having direct molding sole.
28	IS:11057 – 1884 (Reaffirmed 2001)	Specification for Industrial Safety Nets
29	IS: 12254:1993 (Reaffirmed 2002)	Polyvinyl Chloride (PVC) Industrial Boots Specification
30	IS:13367(Part 1):1992 (Reaffirmed 20030	Safe Use of Cranes-Code of Practice
31	IS: 14166:1994 (Reaffirmed 2002)	Respiratory Protective Devices-Full Face Masks Specification
32	IS:14746: 1999 (Reaffirmed 2003)	Respiratory Protective Devices-Half Masks and Quarter Masks - Specification
33	IS: 15397 :2003 (Reaffirmed 2008)	Portable Extinguisher Mechanical Foam Type(Stored Pressure)-Specification
34	IS: 19011:2002	Guidelines for Quality and/or Environmental Management Systems Auditing

As per Contract Labor (Regulation & Abolition Act), Central Rules, 1971,

(1) The first-aid box shall be distinctively marked with a Red Cross on a white background and shall contain the following items, namely:

(a) For establishments in which the number of contract laborers employed does not exceed fifty, each first aid box shall contain the following equipment:

(i)	6 small sterilized dressings
(ii)	3 medium size sterilized dressings
(iii)	3 large size sterilized dressings
(iv)	6 pieces of sterilized eye pads in separate sealed packets.
(v)	6 roller bandages 10 cm wide.
(vi)	6 roller bandages 5 cm wide.
(vii)	One tourniquet
(viii)	A supply of suitable splints
(ix)	Three packets of safety pins.
(x)	Kidney tray.
(xi)	3 large sterilized burn dressings.
(xii)	1 (30ml) bottle containing a two percent alcoholic solution of iodine
(xiii)	1 (30 ml) bottle containing Sal volatile having the dose and mode of administration indicated on the label
(xiv)	1 snake bite lancet
(xv)	1 (30gms) bottle of potassium permanganate crystals.
(xvi)	1 pair scissors
(xvii)	1 copy of the First-Aid leaflet issued by the Director General, Factory Advice Service and Labor Institutes, Government of India.
(xviii)	A bottle containing 100 tablets (each of 5 grains) of aspirin
(xix)	Ointment for burns
(xx)	A bottle of suitable surgical anti-septic solution

(b) For establishment in which the number of contract laborers exceeds fifty each first-aid box shall contain the following equipment:

(i)	12 small sterilized dressings
(ii)	6 medium size sterilized dressings
(iii)	6 large size sterilized dressings.
(iv)	6 large size sterilized burn dressings
(v)	6 (15 grams) packets sterilized cotton wool
(vi)	12 pieces of sterilized eye pads in separate sealed packets.
(vii)	12 roller bandages 10 cm wide.
(viii)	12 roller bandages 5 cm wide.
(ix)	One tourniquet.
(x)	A supply of suitable splints.
(xi)	Three packets of safety pins.
(xii)	Kidney tray.
(xiii)	Sufficient number of eye washes bottles filled with distilled water or suitable liquid clearly indicated by a distinctive sign which shall be visible at all times.
(xiv)	4 per cent Xylocaine eye drops, and boric acid eye drops and soda by carbonate eye drops.
(xv)	1 (60ml) bottle containing a two percent alcoholic solution of iodine
(xvi)	One (two hundred ml) bottle of mercurochrome (2 per cent) solution in water.
(xvii)	1 (120ml) bottle containing Sal volatile having the dose and mode of administration indicated on the label.
(xviii)	1 roll of adhesive plaster (6 cmX1 meter)
(xix)	2 rolls of adhesive plaster (2 cmX1 meter)
(xx)	A snake bite lancet.
(xxi)	1 (30 grams) bottle of potassium permanganate crystals.
(xxii)	1 pair scissors
(xxiii)	1 copy of the First-Aid leaflet issued by the Director-General, Factory Advice service and labor Institutes, Government of India.
(xxiv)	a bottle containing 100 tablets (each of 5 grains) of aspirin
(xxv)	Ointment for burns
(xxvi)	A bottle of a suitable surgical anti septic solution.

(2) Adequate arrangement shall be made for immediate recoupment of the equipment when necessary.

Table 1	
S. No.	**Topic**
1	**Vertigo / Height working Test Structure Layout**
2, 3	**Structure Layout Sketch**
3	**Actual Photo of a typical structure**
4	**Bill of Materials**
5	**Guidelines for Conducting the Test**

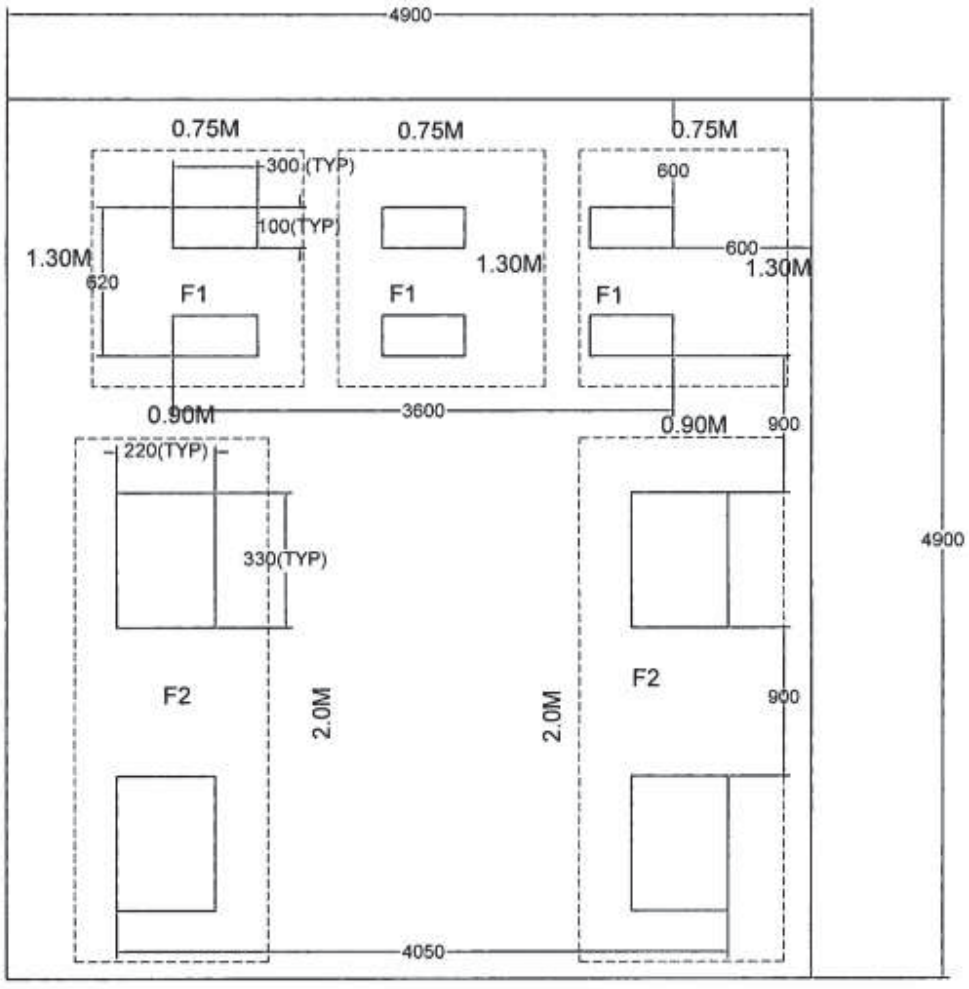

Note:

- All dimensions are in mm
- Drawing is not to scale
- Inside boundary area to be filled with sand to level with road (external)
- Details of F1 and F2 are shown below

Figure 1: Vertigo / Height Work Test Structure Layout

Vertigo Test Structure Specifications

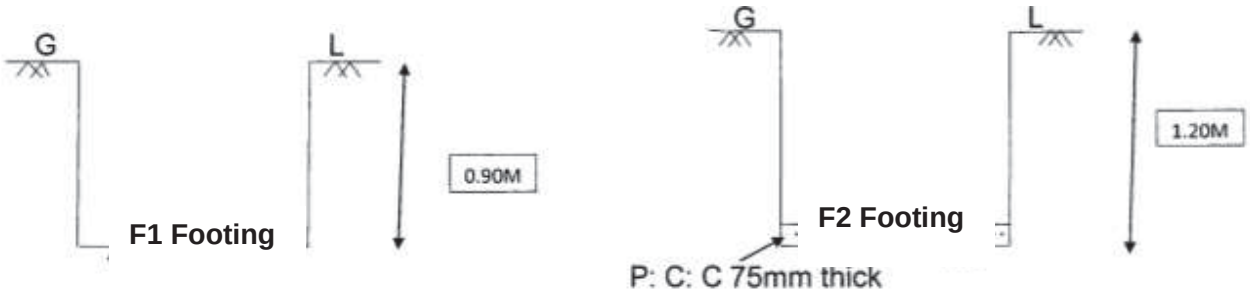

Note:

- Concrete Grade is M15
- Drawing is not to scale
- TOC is at Road Level
- G L refers to Ground Level

Figure 2

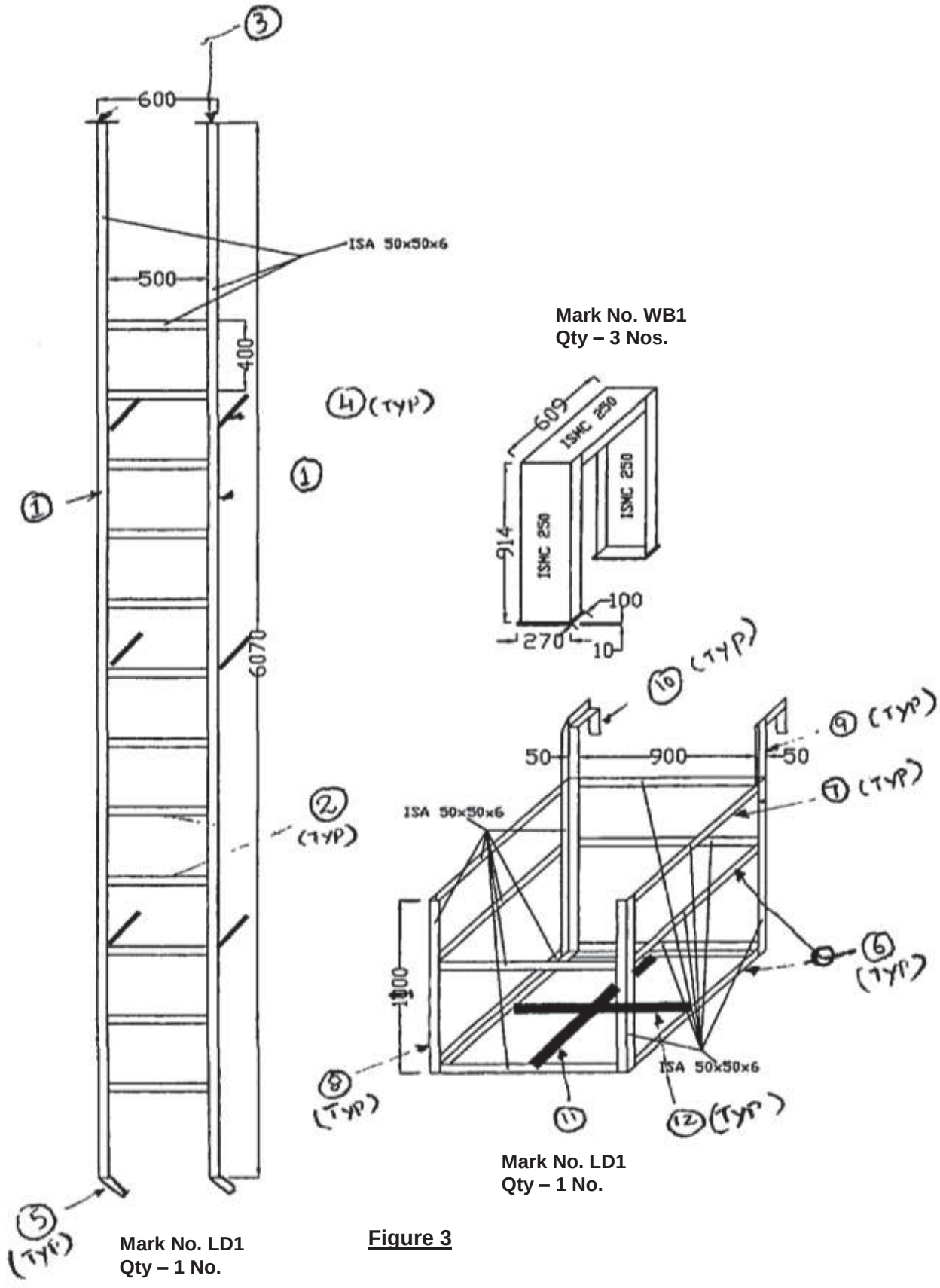

Mark No. LD1
Qty – 1 No.

Mark No. WB1
Qty – 3 Nos.

Mark No. LD1
Qty – 1 No.

Figure 3

Vertigo Test Structure Specifications

Figure 4

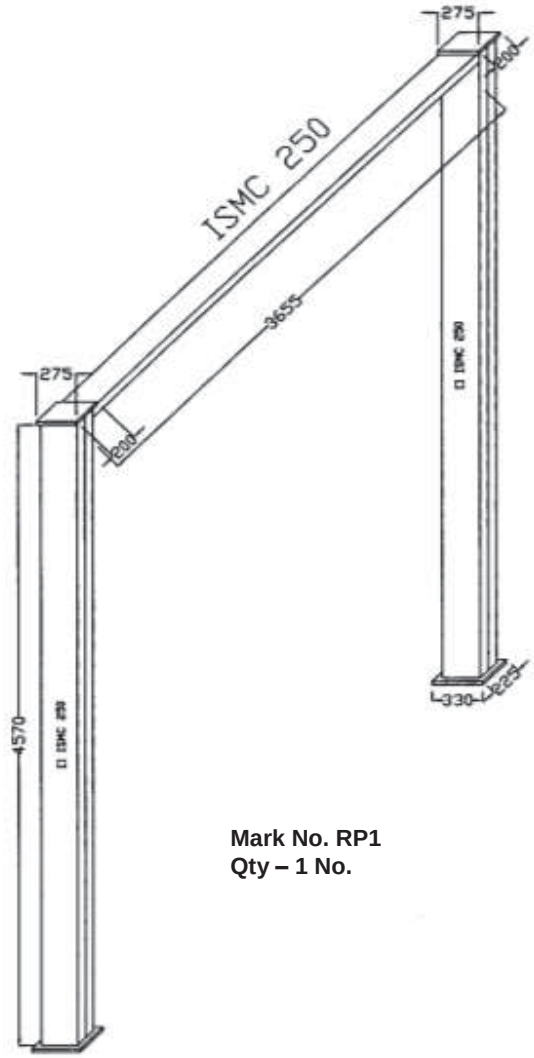

Mark No. RP1
Qty – 1 No.

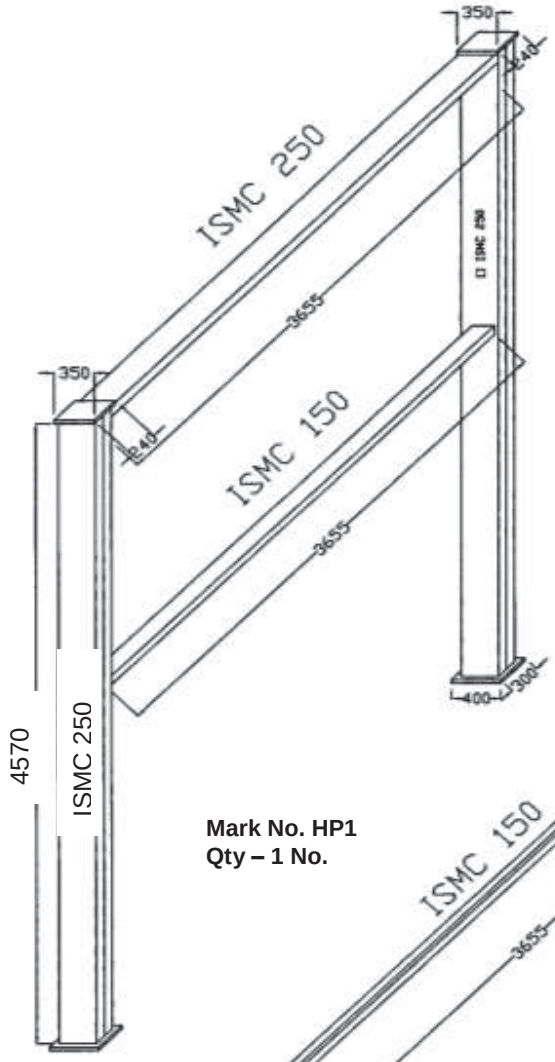

Mark No. HP1
Qty – 1 No.

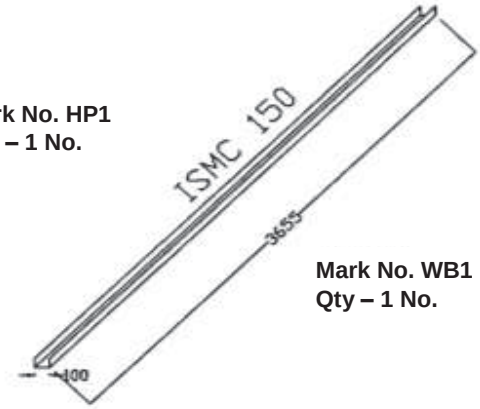

Mark No. WB1
Qty – 1 No.

Pic-1:Actual Photo of a Typical Vertigo Test

Table 2: BOM FOR HEIGHT WORK INDUCTION TRAINING MODULE						
Sl. No.	Description	Width (mm)	Length (mm)	Qty (No's)	Unit Wt (Kgs)	Total Wt. (Kgs)
MKD NO. WB1						
1	ISMC250		609	3	34.20	62.483
2	ISMC250		914	6	34.20	187.553
3	ISMC100		3655	1	9.56	34.942
4	PL10	100	270	6	78.50	12.717
			Total Weight (Kgs)			**297.695**
MKD NO. RP1						
1	ISMC250		4570	4	34.20	625.176
2	ISMC250		3655	1	34.20	125.001
3	PL25	225	330	2	196.25	29.143
4	PL25	200	275	2	196.25	21.588
			Total Weight (Kgs)			**800.908**
MKD NO. HP1						
1	ISMC250		4570	4	34.20	625.176
2	ISMC250		3655	1	34.20	125.001
3	ISMC150		3655	1	16.80	61.404
4	PL25	300	400	2	196.25	47.100
5	PL25	240	350	2	196.25	32.970
			Total Weight (Kgs)			**891.651**
MKD NO. LD1						
1	ISA50X50X6		6070	2	4.50	54.630
2	ISA50X50X6		500	12	4.50	27.000
3	PL12	75	75	2	94.20	1.060
4	ISA50X50X6		300	6	4.50	8.100
5	ISA50X50X6		255	2	4.50	2.295
6	ISA50X50X6		1000	8	4.50	36.000
7	ISA50X50X6		910	3	4.50	12.285
8	ISA50X50X6		1100	4	4.50	19.800
9	ISA50X50X6		650	2	4.50	5.850
10	ISA50X50X6		350	2	4.50	3.150
11	PL8	75	900	1	62.80	4.239
12	PL8	75	410	2	62.80	3.862
			Weight (Kgs)			**178.271**
			Total Weight (Kgs)			**2168.525**

A. Test Procedure / Guidelines

Fear of height may be physiological or psychological. Therefore, to rule out any possibility of physiological factor, detailed medical check-up of workers is carried out before vertigo test. Medical check-up of workers includes the following:
history of past illnesses (like epilepsy, drug allergy, diabetics/ hypertension, unconsciousness etc.), general physical examination (like height, weight, BMI, build and nourishment etc.), measurement of pulse rate, Blood Pressure, respiratory rate.
After this check-up, those who are found suitable for height work by examining doctor, are allowed to undergo vertigo test.
During this health check-up, psychology of workers is also studied. If any worker finds it extremely difficult/ frightening to climb the monkey ladder & walk on the beam, during/after performing vertigo test or even before performing, then he is treated as disqualified.
As per standard, during vertigo test, worker is allowed to climb on a foundation through monkey ladder, walk on a beam, then steps down at the other end of beam, through monkey ladder. Height of the beam should be at least six feet from ground level. All necessary safety precautions are taken during this test. Worker has to wear full body harness with double lanyard. A horizontal lifeline is run parallel to the beam and worker has to put his lanyards into the lifeline. Additionally, a safety net is also put below the beam for rescue of the victim in case of a fall from beam.
Following activities are generally carried during testing:

1. **Walking Bench Training:**
   a. Person should walk over the channel. He should maintain balance & walk without much problem.
   b. If the person has problem to balances himself on repeated chances, he may be having flat foot or some other problem. So, he may not be fit for height work.
2. **Rope Climb Training:**
   Person should be able to climb the rope up to the top channel for ensuring that in case of fall, a person hanging on the safety harness, will be able to safely climb back to the platform within minimum time period before the safety harness start breaking down under the load.
3. **Height Work Training:**
   Person should walk freely on the middle channel while holding the top channel with the help of safety harness.
4. **Ladder for Vertical fall arrestor Training:**
   Vertical fall arrestor rope is fixed from top to bottom of the ladder. It will ensure:
   - Usage of vertical fall arrestor.
   - Usage of two lanyards of a safety harness.
   - Ensure 3-point contact on the ladder while climb.
5. **Chair for work at height Training:**
   - Climb though vertical ladder with two lanyard ropes.
   - Hooking of two lanyard ropes to life line. With this safe arrangement, he can walk to chair.
   - Sits in the chair safely, comes out & walks back to the vertical ladder & come down from vertical ladder. After completion of vertigo test, blood pressure of worker is again measured. If it is not within acceptable limits for any worker, concerned worker is denied height pass.

   Only those who pass the above training are fit for height work.

Safety Park Requirements		
S.No	Training room(capacity 40 persons)	Qty.
1	Class room chair	25
2	Office Table	3
3	Rolling chair	3
4	Almirah	1
5	Visitor chair	10
6	Drawer	2
7	Single bed	1
8	Mattress	1
9	Projector	1
10	Projector screen	1
11	Sound speakers	1
12	Desktop Computer	3
13	Printer	1
14	White Board	1
15	Marker	5
16	Duster	1
17	Door Mat	9
18	Dustbin(Smaal + BIG)	7+1
19	Mannequin	1
20	Helmet	1
21	Face Shield	1
22	Safety Goggle	1
23	Welding sheild	1
24	Ear Muff	1
25	Ear Plug	1
26	Nose Mask	1
27	Breathing Apparatus	1
28	Hand Gloves(Cotton)	1
29	Hand Gloves for Electrician (Rubber)	1
30	Hand gloves Rubber	1
31	Hand Gloves Lather	1
32	Construction Safety Uniform(Boiler Suit)	1
33	Welding Apron	1
34	Safety Shoes	1
35	Leg Guard For Welder	1
36	Poster for Occupational Disease like Pneumoconosis,silicosis etc.	1
37	Gum Boot	1

38	Full Body Harness	1
39	8 MM Wire rope for life line. Length 20 Feet(FT).	1
40	Sfety Net for man & materials.Size 15 FT X 15FT.	1
41	MonkEy ladder 15 FT.	1
45	Fire Extingusher All types(DCP,CO2 & Foam)	1
46	Bed Sheet	1
47	Pillow	1
48	Curtain	12
49	curtain fittings	12
50	AC (1.5 TON)	3
51	AC (2 TON)	2
52	Rope pully.	1
53	PP Rope for pully 20 MTR.	
54	Ladder Clamps	6
55	Allumuniam ladder 6 MTR.	1
56	Carry Bag	
57	Scaffolding all Materilas for 5 Mtr. Height like.Sacffolding tubes,Sole plate,base plate,Right angle clamps,Swielclamps,beam clamps,Joint box/joint pin,toe guard/board,	

Health, Safety & Environment, Power Sector Headquarters

Bharat Heavy Electricals Limited

Regd. Office: BHEL House, Siri Fort, New Delhi – 110049, India

Website: www.bhel.com

1. ADDITIONAL HSE POINTS (TO BE READ ALONG WITH CHAPTER-IX OF SCC). IF THERE IS ANY CONFLICT OF CLAUSES, THE CLAUSES HEREIN WILL PREVAIL

A. The scaffoldings shall be erected under the control and supervision of an experienced and competent person.

B. The Vendor should ensure that scaffolding are designed by a competent person and it erection and repairs should be done under the expert supervision.

C. Vendor shall provide full harness safety belts fitted with fall arresting systems to all the employees working at higher elevations and life line of 8 mm diameter stainless steel wire rope with turn buckles for anchoring the safety belts while working or moving at higher elevations. Safety nets shall also be provided for saving them from fall from heights and such equipment should be in accordance with BIS standards.

D. The Vendor shall provide suitable personal protective equipments to the workers who are handling the hazardous and corrosive substances including alkalis and acids. As a precautionary measure the Vendor should keep the bottles filled with distilled water in cupboard / Boxes near work place for emergency eye wash by worker exposed to such hazardous chemicals.

E. The Vendor shall take all necessary measures during excavation to prevent the hazards of falling or sliding material or article from any bank or side of such excavation which is more than one and a half meter above his footing by providing adequate piling, shoring, bracing etc. against such bank or sides.

F. The Vendor should ensure use of single / double insulated hand tools or low voltage i.e., 110 volts hand tools.

G. The Vendor shall employ necessary number of qualified, full time electricians/ electrical supervisors to maintain his temporary electrical installations.

H. The Vendor employing more than 250 workmen whether temporary, casual, probationary, regular or permanent shall employ at least one full time safety officer exclusively to supervise safety aspects of the equipments and workmen, who will coordinate with the BHEL/ their authorised representative Safety Officer.

I. In case of Vendor deploying less than 250 workmen he should designate one of his Engineer / supervisor or the Vendor himself (if he is directly supervising the work) as safety officer in addition to his existing responsibilities. The Engineer/ supervisor should get at least 2days safety

training from any reputed organization or from BHEL/ their authorised representative before resuming the work. If already trained in past the declaration along with training. Certificate to be furnished to BHEL/ their authorised representative safety officer.

J. Reporting of Accident and Investigation

In case any accident occurs during the construction / erection or other associated activities undertaken by the Vendor thereby causing any near miss, minor or major or fatal injury to his employees due to any reason, whatsoever, it shall be the responsibility of the Vendor to promptly inform the same to the Engineer in-charge, BHEL/ their authorised representative, Safety Officer with a copy to BHEL/ their authorised representative, Head of Project in the prescribed form and also to all the authorities envisaged under the applicable laws

K. Right to stop Work

i) The BHEL officialshall have the right at his sole discretion to stop the work, if in his opinion the work is being carried out in such a -way that it may cause accidents and endanger the safety of the persons and / or property, and / or equipments. In such cases, the Vendor shall be informed in writing about the nature of hazards and possible injury / accident and he shall comply to remove shortcomings promptly. The Vendor after stopping the specific work can, if felt necessary appeal against the order of stoppage of work to the Project Manager within 3 days of such stoppage of work and decision of the Project Manager in this respect shall be conclusive and binding on the Vendor.

ii) The Vendor shall not be entitled for any damages / compensation for stoppage of work, {Sub-Clause K (I)} due to safety reasons and the period of such stoppage of work shall not be taken as an extension of time for Completion of the Facilities and will not be the ground for waiver of levy of liquidated damages.

2. Penalties: these supersede the corresponding clauses under Penalty in the Chapter-IX of SCC

i) If the Vendor fails in providing safe working environment as per the Safety Rules of BHEL or continues the work even after being instructed to stop the work by the BHEL officials provided in Clause K (1) above, the Vendor shall be penalized at the rate of Rs.25,000/- per day or part thereof till the instructions are complied with and so certified by the BHEL official- However, in case of accident, the provisions contained in Sub-Clause (II) below shall also apply in addition to the penalties mentioned in this sub-clause.

ii) If the Vendor does not take all safety precautions and / or fails to comply with the Safety Rules as prescribed by the Owner/his authorised representative or under the applicable law for the safety of the plant and equipment and for the safety of personnel and the Vendor does

not prevent hazardous conditions which cause injury to this own employees or employees of other Vendors, or BHEL/ their authorised representative's employees or any other person who are at the Site or adjacent thereto, the Vendor shall be responsible for payment of penalty to BHEL as per the following schedule; -

a) Fatal injury or accident causing Penalty @10% of contract value death or Rs. 5,00,000/- per person, which ever is less.

b) Major injuries or accident causing Penalty @2.5 % of contract 25% or more permanent value or Rs.1,00,000/- per disablement to workmen or person which-ever is less employees.

iii) Permanent disablement shall have the same meaning as indicated in The Workmen's Compensation Act' 1923. The penalty mentioned above shall be in addition to the compensation payable to the workmen / employees under the relevant provisions of the Workmen's Compensation Act' 1923 and rules framed there under or any other applicable laws as applicable from time to time.

iv) If any Vendor worker found working without using the safety equipment like safety helmet, safety shoes, safety belts, etc. or without anchoring the safety belts while working at height the Engineer in-charge / Safety Officer of BHEL/ their authorised representative shall have the right to penalize the Vendor for Rs. 200/- per person per day and such worker shall be sent out of the workplace immediately and shall not be allowed to work on that day. Engineer in-charge / Safety Officer of BHEL/ their authorised representative will also issue a notice in this regard to the Vendor

v) If two or more fatal accidents occur at same BHEL/ their authorised representative site under the control of Vendor during the period of contract and he has

(1) not complied with keeping adequate PPEs in stock

(2) defaulted in providing PPR's to his -workmen

(3) not followed statutory requirements /BHEL/ their authorised representative safety rules

(4) been issued warning notice/s by BHEL/ their authorised representative head of the project on non observance of safety norms

(5) not provided safety training to all his workmen, the Vendor can be debarred from getting tender documents in BHEL/ their authorised representative for two years from the date of last accident.

vi) The safety performance will also be one of the overriding criteria for evaluation of overall performance of the Vendors by BHEL/ their authorised representative.

INDEX

SN	Description	Form No	Remarks
1.0	**Forms**		
1.1	Offer forwarding Letter/Submission of Tender	F-1 (Rev 00)	
1.2	Declaration by Authorised Signatory	F-2 (Rev 00)	
1.3	No Deviation Certificate	F-3 (Rev 00)	
1.4	Declaration confirming knowledge about Site Conditions	F-4 (Rev 00)	
1.5	Declaration for relation in BHEL	F-5 (Rev 00)	
1.6	Non Disclosure Certificate	F-6 (Rev 00)	
1.7	Bank Account Details for E-Payment	F-7 (Rev 00)	
1.8	Form for seeking clarifications	F-8 (Rev 00)	
1.9	Capacity Evaluation of Bidder for current Tender	F-9 (Rev 00)	
1.10	Contract Agreement	F-10 (Rev 00)	
1.11	Bank Guarantee for Security Deposit	F-11 (Rev 00)	
1.12	Bank Guarantee for ~~Interest Bearing Refundable~~ Advance	F-12 (Rev 00)	
1.13	Extension of Validity of Bank Guarantee	F-13 (Rev 00)	
1.14	Monthly Plan & Review with Contractors	F-14 (Rev 00)	
1.15	Monthly Performance Evaluation of Contractor	F-15 (Rev 01)	Revised
1.16	~~Evaluation of Contractor Performance (Quarterly)~~	~~F-16 (Rev 00)~~	Deleted
1.17	Evaluation of Contractor Performance (Annual)	F-17 (Rev 01)	Under revision ##
1.18	Evaluation of Contractor Performance for the Contract (Overall)	F-18 (Rev 01)	Under revision ##

SN	Description	Form No	Remarks
1.19	Milestone Completion Certificate	F-19 (Rev 00)	
1.20	Completion Certificate	F-20 (Rev 01)	Revised
1.21	Indemnity Bond	F-21 (Rev 00)	
1.22	Consortium Agreement	F-22 (Rev 00)	
1.23	Refund of Security Deposit	F-23 (Rev 00)	
1.24	Refund of Guarantee Money	F-24 (WAM-11)	
1.25	Power of Attorney for Submission of Tender/Signing Contract Agreement	F-25 (Rev 00)	
1.26	Analysis of Unit Rates Quoted	F-26 (Rev 00)	
1.27	RA Bill Format	WAM-6	
1.28	Final Bill Submission format with No Claim Certificate and No Demand Certificate	WAM-7	
1.29	PROFORMA FOR PERFORMANCE BANK GUARANTEE		
1.30	BANK GUARANTEE FOR SD CUM PBG BOND		
2.0	**Procedures**		
2.1	Procedure and Business Rules for Reverse Auction	As per Company Policy	
2.2	Integrity Pact	As per Company Policy	
3.0	**Customer specific procedures**		
3.1			

• BANK GUARANTEE FORMATS FOR "RELEASE OF AMOUNTS WITHED/ LIQUIDATED DAMAGES AMOUNT", "SUPPLY FREE ISSUE MATERIAL" & "EARNEST MONEY" IS ALSO GIVEN.

: will be released later

Form No: F-01 (Rev 00)

OFFER FORWARDING LETTER / TENDER SUBMISSION LETTER

(To be typed and submitted in the Letter Head of the Company/Firm of Bidder)

Offer Reference No:……. Date:……

To,

(Write Name & Address of Officer of BHEL inviting the Tender)

Dear Sir,

Sub : Submission of Offer against Tender Specification No: ……

I/We hereby offer to carry out the work detailed in the Tender Specification issued by Bharat Heavy Electricals Limited, Power Sector-…… ……., in accordance with the terms and conditions thereof.

I/We have carefully perused the following listed doc uments connected with t he above work and agree to abide by the same.

1. Amendments/Clarifications/Corrigenda/Errata/etc issued in respect of the Tender documents by BHEL
2. Notice Inviting Tender (NIT)
3. Price Bid
4. Technical Conditions of Contract
5. Special Conditions of Contract
6. General Conditions of Contract
7. Forms and Procedures

Should our Offer be accepted by BHEL for Award, I/we further agree to furnish 'Security Deposit' for the work as provided for in the Tender Conditions within the stipulated time as may be indicated by BHEL.

I/We further agree to execute all the works referred to in the said Tender documents upon the terms and conditions contained or referred to therein and as detailed in the appendices annexed thereto.

I/We have deposited/depositing herewith the requisite Earnest Money Deposit (EMD) as per details furnished in the Check List.

Authorised Representative of Bidder
Signature :
Name :
Address :

Place:
Date:

Form No: F-02 (Rev 00)

DECLARATION BY AUTHORISED SIGNATORY OF BIDDER

(To be typed and submitted in the Letter Head of the Company/Firm of Bidder)

To,

(Write Name & Address of Officer of BHEL inviting the Tender)

Dear Sir,

Sub : **Declaration by Authorised Signatory**
Ref : 1) NIT/Tender Specification No: ……,
2) All other pertinent issues till date

I/We, hereby certify that all the information and data furnished by me with regard to the above Tender Specification are true and complete to the best of my knowledge. I have gone through the specifications, conditions, stipulations and all other pertinent issues till date, and agree to comply with the requirements and Intent of the specification.

I further certify that I am authorised to represent on behalf of my Company/Firm for the above mentioned tender and a valid Power of Attorney to this effect is also enclosed.

Yours faithfully,

(Signature, Date & Seal of Authorized Signatory of the Bidder)

Date:

Enclosed : Power of Attorney

Form No: F-03 (Rev 00)

NO DEVIATION CERTIFICATE

(To be typed and submitted in the Letter Head of the Company/Firm of Bidder)

To,

(Write Name & Address of Officer of BHEL inviting the Tender)

Dear Sir,

Sub : **No Deviation Certificate**
Ref : 1) NIT/Tender Specification No: ……,
2) All other pertinent issues till date

We hereby confirm that we have not changed/ modified/materially altered any of the tender documents as downloaded from the website/ issued by BHEL and in case of such observance at any stage, it shall be treated as null and void.

We also hereby confirm that we have neither set any Terms and Conditions and nor have we taken any deviation from the Tender conditions together with other references applicable for the above referred NIT/Tender Specification.

We further confirm our unqualified acceptance to all Terms and Conditions, unqualified compliance to Tender Conditions, Integrity Pact (if applicable) and acceptance to Reverse Auctioning process.

We confirm to have submitted offer in accordance with tender instructions and as per aforesaid references.

Thanking you,

Yours faithfully,

(Signature, date & seal of authorized representative of the bidder)

Form No: F-04 (Rev 00)

DECLARATION CONFIRMING KNOWLEDGE ABOUT SITE CONDITIONS

(To be typed and submitted in the Letter Head of the Company/Firm of Bidder)

To,

(Write Name & Address of Officer of BHEL inviting the Tender)

Dear Sir,

Sub : **Declaration confirming knowledge about Site conditions**
Ref : 1) NIT/Tender Specification No: ……,
2) All other pertinent issues till date

I/We, _____ hereby declare and confirm that we have visited the Pr oject Site as referred in BHEL Tender Specificat ions and acquired full knowledge and information about the Site conditions including Wage structure, Industrial Climate, the Law & Order and other conditions prevalent at and around the Site. We further confirm that the above information is true and correct and we shall not raise any claim of any nature due to lack of knowledge of Site conditions.

I/We, hereby offer to c arry out work as detailed in abov e mentioned Tender Specification, in accordance with Terms & Conditions thereof.

Yours faithfully,

(Signature, Date & Seal of Authorized
Representative of the Bidder)

Date :

Place:

Form No: F-05 (Rev 00)

DECLARATION FOR RELATION IN BHEL

(To be typed and submitted in the Letter Head of the Company/Firm of Bidder failing which the offer of Bidder is liable to be summarily rejected)

To,

(Write Name & Address of Officer of BHEL inviting the Tender)

Dear Sir,

Sub : **Declaration for relation in BHEL**
Ref : 1) NIT/Tender Specification No: ……,

I/We hereby submit the followi ng information pertaining to relation/relatives of Proprieter/Partner(s)/Director(s) employed in BHEL

Tick(√) any one as applicable:

1. The Proprieter, Partner(s), Director(s) of our Company/F irm DO NOT have any relation or relatives employed in BHEL

   OR

2. The Proprieter, Partner(s), or Director(s) of our Company/Firm HAVE relation/relatives employed in BHEL and their particulars are as below:
   (i)

   (ii)

Signature of the Authorised Signatory

Note:

1. Attach separate sheet, if necessary.
2. If BHEL Management comes to know at a later date that the information furnished by the Bidder is false, BHEL reserves the right to take suitable against the Bidder/Contractor.

Form No: F-06 (Rev 00)

NON DISCLOSURE CERTIFICATE
(To be typed and submitted in the Letter Head of the Company/Firm of Bidder)

NON DISCLOSURE CERTIFICATE

I/We understand that BHEL PS __ is committed to Information Security Management System as per their Information Security Policy.

Hence, I/We M/s…….. who are subm itting offer for providing services to BHEL PS __ against Tender Specification No:_____ _____, hereby undertake to comply with the following in line with Information Security Policy of BHEL PS ___, _____

- To maintain confidentiality of documents & information which shall be used during the execution of the Contract.
- The documents & information shall not be revealed to or shared with third party which shall not be in the business interest of BHEL PS__.

(Signature, date & seal of Authorized Signatory of the bidder)

Date:

Form No: F-07 (Rev 00)

BANK ACCOUNT DETAILS FOR E-PAYMENT

(To be given on Letter head of the Company /Firm of Bidder, and **ENDORSED (SIGNED & STAMPED) BY THE BANK** to enable BHEL release payments through Electronic Fund Transfer (EFT/RTGS)

---

1. Beneficiary Name :

2. Beneficiary Account No. :

3. Bank Name & Branch :

4. City/Place :

5. 9 digit M ICR Code of Bank Branch :

6. IFSC Code of Bank Branch :

7. Beneficiary E-mail ID :
   (for payment confirmation)

NOTE: In case Bank endorsed certificate regarding above has already been submitted earlier, Kindly submit photocopy of the same

Form No: F-08 (Rev 00)

FORMAT FOR SEEKING CLARIFICATION

(To be typed and submitted in the Letter Head of the Company/Firm of Bidder)

To,

(Write Name & Address of Officer of BHEL inviting the Tender)

Dear Sir,

Sub : **Request for Clarification**
Ref : 1) NIT/Tender Specification No: ……,
2) All other pertinent issues till date

Sl no	Reference clause of Tender Document	Existing provision	Bidder's query	BHEL's clarification
1				
2				
3				

Yours faithfully,

(Signature, date & seal of Authorized Representative of the Bidder)

Form No: F-09 (Rev 00)

CAPACITY EVALUATION OF BIDDERS FOR CURRENT TENDER

SL NO.	DESCRIPTION OF WORK (Similar to Tendered Scope)	WORK ORDER REF & DATE	CONTRACT VALUE (Rs. LACS)	CUSTOMER NAME & ADDRESS	CURRENT STATUS OF THE JOB ALONG WITH LATEST MILE STONE COMPLETED	%AGE OF WORK COMPLETED	VALUE OF BALANCE WORK (Rs. Lacs)
1							
2							
3							
4							
5							

NOTES:

1. BIDDERS ARE REQUIRED TO FURNISH ALL THE JOBS OF SIMILAR NATURE WHICH THEY ARE EXECUTING (IN PROGRESS) AT THE TIME OF SUBMISSION OF TENDER, AS PER ABOVE FORMAT.
2. BIDDERS HEREBY UNDERTAKE THAT THEY HAVE FURNISHED THE DETAILS SOUGHT AS PER POINT NO. 1 IN TOTALITY AND THAT THE DETAILS FURNISHED IS COMPLETE IN ALL RESPECT.
3. BHEL WILL TAKE APPROPRIATE ACTION AS DEEMED FIT , IN CASE, IT IS FOUND AT A LATER DATE THAT THE CONTRACTOR HAD SUPPRESSED THE FACTS AND HAVE NOT FURNISHED THE CORRECT & COMPLETE INFORMATIONS.

Signature

DATE :
PLACE:

Name, Designation & Seal of Bidder

CONTRACT AGREEMENT Form No: F-10 (Rev 00)

BHARAT HEAVY ELECTRICALS LIMITED
(A Government of India Undertaking)
Power Sector – ..... Region

CONTRACT AGREEMENT

AGREEMENT NO._____ _____

NAME OF WORK	
NAME OF THE CONTRACTOR WITH FULL ADDRESS	
VALUE OF WORK AWARDED	
LETTER OF INTENT NO.	
TIME ALLOTTED FOR COMPLETING THE WORK (DATE OF COMPLETION)	

_____ _____

SIGNATURE OF CONTRACTOR **(SIGNATURE OF BHEL OFFICER)**

CONTRACT AGREEMENT

THIS AGREEMENT MADE THIS _____DAY OF_____ between BHARAT HEAVY ELECTRICALS LIMITED (A Government of India Enterprise) a Company incorporated under the Companies Act, 1956, having its Registered Office at BHEL House, Siri Fort New Delhi- 110049 (herein after called BHEL) of the ONE PART.

AND

M/S _____
_____ (hereinafter called the `Contractor') of the SECOND PART.

WHEREAS M/s ----------state that they have acquired and possess extensive experience in the field of ----------

And Whereas in response to an Invitation to Tender No. ---------- issued by BHEL for execution of ---------- the contractor submitted their offer No.----------dated ----------And whereas BHEL has accepted the offer of the Contractor on terms and conditions specified in the Letter of Intent No.---------- ---------- dated ----------read with the references cited therein.

THIS AGREEMENT WITNESSES AND it is hereby agreed by and between the parties as follows:

1. That the contractor shall execute the work of ---------- ----------and more particularly described in Tender Specification No ----------including Drawings and Specifications (hereinafter called the said works) in accordance with and subject to terms and conditions contained in these presents, instructions to Tenderers, General Conditions of Contract, Special Conditions, Annexures, Letter of Intent dated ----------and such other instructions, Drawings, Specifications given to him from time to time by BHEL.

2. The Contractor is required to furnish to BHEL Security deposit in the form of cash/ approved securities/ Bank Guarantee valid upto ---------- for a sum of Rs.---------- towards satisfactory performance and completion of the Contract.

3. The Contractor has furnished a Bank Guarantee bearing no.----------dated ----------for a sum of Rs.----------executed by ---------- ---------- in favour of BHEL towards Security Deposit valid upto ---------

OR

The Contractor has furnished to BHEL an initial Security Deposit of Rs.----------in the form of cash / approved Securities/ B.G No.---------- dated ---------- for Rs.---------- executed by ---------- ---------- in favour of BHEL valid upto --- ---------- and has agreed for recovery of the balance security deposit by BHEL @ 10% of the value of work done from each running bill till the entire Security Deposit is recovered.

OR

The contractor has furnished to BHEL an init ial Security Deposit of Rs.-----(Rs.----------- vide Bank draft No.--- ----------dated ----------and by adjusting EMD of Rs.---------- submitted vide Bank dr aft No.---------- dt.---------) and has agreed for recovery of balance Security Deposit by BHEL @ 10% of the value of work done from each running bill till the entire security deposit is recovered.

4. The Contractor hereby agrees to extend the validity of th e Bank Gua rantee for such further period or periods as may be required by BHEL and if the Contractor fails to obtain such extension(s) from the Bank, th e Contractor, shall pay forthwith or accept reco very of Rs.---------- from the bills in one installment and the contractor further agrees that failure to e xtend the validity of th e Bank Guarantee or failure to p ay the aforesaid amount in the manner specified above shall constitute breach of contract. In addition to above, BHEL shall be entitled to take such action as deemed fi t and prop er for recovering the said sum of Rs.----------

OR

In case the contractor furnishes the bank guarantee at a later date the contractor hereby agrees to extend the validity of bank guarantee for such further period or periods as may be required by BHEL and if the cont ractor fails to obtain such extension(s) from the bank, the contractor shall pay forthwith o r accept recovery of the amount of bank guar antee given in lieu of security deposit from the bill s in one installment and the contractor further agrees that failure to extend the validity of bank guarantee or failure to pay the aforesaid amount in t he manner specified above shall constitute bre ach of contract. In addition to above, BHEL shall be entitled to take such action as deemed fit and pro per for recovering the said sum.

5. That in consideration of the payments to be made to the Contractor by BHEL in accordance with this Agreement the Contractor hereby covenants and undertakes with BHEL that they shall execute, construct, complete the works in conformity, in all respe cts, with the terms and conditions specified in this Agreement and the documents governing the same.

6. That the Contractor sha ll be deemed to have carefully exa mined this Agreement and the documents governing the same an d also to h ave satisfied himself a s to the nature and character of the Works to be executed by him.

7. That t he Contractor shall carr y out and c omplete the execution of the said works to the entire satisfaction of the Engineer or such ot her officer a uthorised by BHEL, wit hin the agreed time schedule, the time of completion being the essence of the Contract.

8. That BHEL shall, after proper scrutiny of the bills submitted by the Contractor, pay to hi m during the progress of the said works such su m as determined by BHEL in accordance with this Agreement.

9. That this Agreement shall be deemed to have come into force from -------- the d ate on which the letter of intent has been issued to the Contractor.

10. That whenever under this contract or otherwise, any sum of money shall be recoverable from or payable by the Contractor, the same may be deducted in the manner as set out in the General Conditions of Contract or other conditions governing this Agreement.

11. That all charges on account of Octroi, Terminal and other taxes including sales tax or other duties on material obtained for execution of the said works shall be borne and paid by the Contractor.

12. That BHEL shall be entitled to deduct from the Contractor's running bills or otherwise Income Tax under Section 194 (C) of the Income Tax Act, 1961.

13. That BHEL shall be further entitled to recover from the running bills of the Contractor or otherwise such sum as may be determined by BHEL from time to time in respect of consumables supplied by BHEL, hire charges for tools and plants issued (Where applicable) and any other dues owed by the Contractor.

14. That it is hereby agreed by and between the parties that non- exercise, forbearance or omission of any of the powers conferred on BHEL and /or any of its authorities will not in any manner constitute waiver of the conditions hereto contained in these presents and the liability of the Contractor with respect to compensation payable to BHEL or Contractor's obligations shall remain unaffected.

15. It is clearly understood by and between the parties that in the event of any conflict between the Letter of Intent and other documents governing this Agreement, the provisions in the Letter of Intent shall prevail.

16. The following documents

1. Invitation to Tender No----------
   and the documents specified therein.
2. Contractor's Offer No----------
   dated----------.
3. _____
4. _____
5. _____
6. Letter of Intent No_____ dated_____.
7. _____

shall also form part of and govern this Agreement.

IN WITNESS HEREOF, the parties hereto have respectively set their signatures in the presence of

WITNESS (CONTRACTOR)

(to be signed by a person holding
1. a valid Power of Attorney)

2.

WITNESS (For and on behalf of BHEL)

1.

2.

PROFORMA OF BANK GUARANTEE (in lieu of SECURITY DEPOSIT)

In consideration of the Bharat Heavy Electricals Limited (hereinafter referred to as the 'Employer' which expression shall unless repugnant to the context or meaning thereof, include its successors and permitted assigns) incorporated under the Companies Act, 1956 and having its registered office at BHEL House, Siri Fort, Asiad, New Delhi – 110049 through its Unit at Bharat Heavy Electricals Limited, Power Sector Eastern Region, BHEL Bhawan, Plot No 9/1, DJ Block, Sector-II, Salt lake City, Kolkata – 700091 having agreed to exempt (Name of the Vendor / Contractor / Supplier) having its registered office at_____ [1] (hereinafter called the said Contractor which term includes supplier), from demand under the terms and conditions of the Contract reference No._____ [2] dated _____[2] valued at Rs……[2] (Rupees ----------)[2] for <Nature of the Work>[3] (hereinafter called the said Contract) of Security Deposit for the due fulfilment by the said contractor of the terms and conditions contained in the said Contract, on production of a Bank Guarantee for Rs._____ [4] (Rupees _____ only), we ____(indicate the name and address of the Bank) having its Head Office at _____(address of the head Office) (hereinafter referred to as the Bank) at the request of _____ [Name of Contractor(s)] do hereby undertake to pay to the Employer an amount not exceeding Rs._____ in the event of any breach by the said Contractor(s) of any of the terms and conditions contained in the said Contract.

We, _____(indicate the name of the Bank), do hereby undertake to pay the amounts due and payable under this guarantee without any demur, merely on a demand from the Employer. Any such demand made on the bank, shall be conclusive as regards the amount due and payable by the Bank under this guarantee. However, our liability under this guarantee shall be restricted to an amount not exceeding Rs._____.

We undertake to pay to the Employer any money so demanded notwithstanding any dispute or disputes raised by the Contractor(s) in any suit or proceeding pending before any Court or Tribunal relating thereto our liability under this present being absolute and unequivocal.

The payment so made by us under this guarantee shall be a valid discharge of our liability for payment hereunder and the Contractor(s) shall have no claim against us for making such payment.

We, further agree that the guarantee herein contained shall remain in full force and effect during the period that would be taken for the performance of the said Contract and that it shall continue to be enforceable till all the dues of the Employer under or by virtue of the said Contract have been fully paid and its claim satisfied or discharged or till _____ [5] or till the office/Department/Division of Bharat Heavy Electricals Limited certifies that the terms and conditions of the said Contract have been fully and properly carried out by the said contractor(s) and also including the satisfactory performance of the equipment during guarantee period and accordingly discharges this guarantee. Unless a demand or claim under this guarantee is made on us in writing on or before the _____[6], (3 months more than the present date of validity of Bank Guarantee) we shall be discharged from all the liability under this guarantee thereafter.

We, ____(indicate the name of the Bank)_____further agree with the Employer that the Employer shall have the fullest liberty without our consent and without affecting in any manner our obligations hereunder to vary any of the terms and conditions of the said Contract or to extend time of performance by the said contractor(s) from time to time or to postpone for any time or from time to time any of the powers exercisable by the Employer against the said contractor(s) and to forbear or enforce any of the terms and conditions relating to the said Contract and we shall not be relieved from our liability by any reason of any such variation or extension being granted to the said contractor(s) or for any forbearance, act or omission on the part of the Employer or any indulgence by the Employer to the said contractor(s) or by any such matter or thing whatsoever which under the law relating to sureties would but for this provision have effect of so relieving us.

This guarantee will not be discharged due to the change in the constitution of the Bank or the Contractor(s).

We,……. BANK lastly undertake not to revoke this guarantee during its currency except with the previous consent of the Employer in writing.

Notwithstanding anything to the contrary contained hereinabove:

a) The liability of the Bank under this Guarantee shall not exceed…… [7]

b) This Guarantee shall be valid up to ……[8]

c) Unless the Bank is served a written claim or demand on or before _____[9] (3 months more than the present date of validity of Bank Guarantee) all rights under this guarantee shall be forfeited and the Bank shall be relieved and discharged from all liabilities under this guarantee irrespective of whether or not the original bank guarantee is returned to the Bank.

We, ____(indicate the name of the Bank)____ lastly undertake not to revoke this guarantee during its currency except with the previous consent of the Employer in writing.

Any claim or dispute arising under the terms of this document shall only be enforced or settled in the courts of at Kolkata only.

Date _____ Day of _____

for____(indicate the name of the Bank)__

(Signature of Authorised signatory)

[1] *NAME AND ADDRESS OF THE VENDOR /CONTRACTOR / SUPPLIER .*

[2] *DETAILS ABOUT THE NOTICE OF AWARD/CONTRACT REFERENCE*

[3] *PROJECT/SUPPLY DETAILS*

[4] *BG AMOUNT IN FIGURES AND WORDS*

[5] *VALIDITY DATE*

[6] *DATE OF EXPIRY OF CLAIM PERIOD*

[7] *BG AMOUNT IN FIGURES AND WORDS.*

[8] *VALIDITY DATE*

[9] *DATE OF EXPIRY OF CLAIM PERIOD*

Note:

1. **Units are advised that expiry of claim period may be kept 2/3 months after validity date.**
2. **In Case of Bank Guarantees submitted by Foreign Vendors-**
   - **a.** **From Nationalized/Public Sector / Private Sector/ Foreign Banks (BG issued by Branches in India)** can be accepted subject to the condition that the Bank Guarantee should be enforceable in the town/city or at nearest branch where the Unit is located i.e. Demand can be presented at the Branch located in the town/city or at nearest branch where the Unit is located.
   - **b.** **From Foreign Banks (wherein Foreign Vendors intend to provide BG from local branch of the Vendor country's Bank)**
   - **b.1** In such cases, in the Tender Enquiry/ Contract itself, it may be clearly specified that Bank Guarantee issued by **any of the Consortium Banks only** will be accepted by BHEL. As such, Foreign Vendor needs to make necessary arrangements for issuance of Counter-Guarantee by Foreign Bank in favour of the Indian Bank (BHEL's Consortium Bank). It is advisable that all charges for issuance of Bank Guarantee/ counter- Guarantee should be borne by the Foreign Vendor. The tender stipulation should clearly specify these requirements.

b.2 **In case, Foreign Vendors intend to provide BG from** Overseas Branch of our Consortium Bank (e.g. if a BG is to be issued by SBI Frankfurt), the same is acceptable. However, the procedure at **sl.no. b.1** will required to be followed.

b.3 The BG issued may preferably be subject to Uniform Rules for Demand Guarantees (URDG) 758 (as amended from time to time). In case, of Foreign Vendors, the BG Format provided to them should clearly specify the same.

b.4 The BG should clearly specify that the demand or other document can be presented in electronic form.

BANK GUARANTEE FOR ADVANCE

Bank Guarantee No:

Date:

To

NAME

& ADDRESSES OF THE BENEFICIARY

Dear Sirs,

In consideration of the Bharat Heavy Electricals Limited (hereinafter referred to as the 'Employer' which expression shall unless repugnant to the context or meaning thereof, include its successors and permitted assigns) incorporated under the Companies Act, 1956 and having its registered office at BHEL House, Siri Fort, Asiad, New Delhi – 110049 through its Unit at Bharat Heavy Electricals Limited, Power Sector Eastern Region, BHEL Bhawan, Plot No 9/1, DJ Block, Sector-II, Salt lake City, Kolkata – 700091 having awarded to (Name of the Vendor / Contractor / Supplier) having its registered office at_____ [1] (hereinafter called "the Contractor" which expression shall include its successors and permitted assigns) a contract Ref No……dated ……[2]valued at Rs……(Rupees ----------) for <Nature of Work> [3](hereinafter called the 'Contract')

AND WHEREAS the Employer has agreed to advance to the Contractor, a sum of Rs…….. (Rupees…….. only), equivalent to _____% of the said value of the Contract (hereinafter called "the said Advance"), upon the condition, that the said Advance shall be secured by undertaking guarantee for Rs ---------- (Rupees ----------)[4] from a Bank as hereinafter appearing.

We, ……, (hereinafter referred to as the Bank), having registered/Head office at ……. and a branch at …… being the Guarantor under this Guarantee, hereby irrevocably and unconditionally undertake to forthwith and immediately pay to the Employer without any demur, merely on your first demand any sum or sums upto a maximum amount but not exceeding Rs ---------- (Rupees ----------).

Any such demand made on the Bank shall be conclusive as regards the amount due and payable by the Bank under this guarantee. However, our liability under this guarantee shall be restricted to an amount not exceeding Rs. _____

We undertake to pay to the Employer any money so demanded notwithstanding any dispute or disputes raised by the Contractor/ Supplier in any suit or proceeding pending before any Court or Tribunal relating thereto our liability under this present being absolute and unequivocal.

The payment so made by us under this Guarantee shall be a valid discharge of our liability for payment hereunder and the Contractors/Supplier shall have no claim against us for making such payment.

We the ……Bank further agree that the guarantee herein contained shall remain in full force and effect during the period that would be taken for the performance of the said Contract and that it shall continue to be enforceable till all the dues of the Employer under or by virtue of the said Contract have been fully paid and its claims satisfied or discharged.

We …….. Bank further agree that the Employer shall have the fullest liberty without our consent and without affecting in any manner our obligations hereunder to vary any of the terms and conditions of the said Contract or to extend time of performance by the said Contractor/Supplier from time to time or to postpone for any time or from time to time any of the powers exercisable by the Employer against the said Contractor/Supplier and to forbear or enforce any of the terms and conditions relating to the said Agreement and we shall not be relieved from our liability by reason of any such variation, or extension being granted to the said Contractor/Supplier or for any forbearance, act or omission on the part of the Employer or any indulgence by the Employer to the said Contractor/Supplier or by any such matter or thing whatsoever which under the law relating to sureties would but for this provision have effect of so relieving us.

The Bank also agrees that the Employer at its option shall be entitled to enforce this Guarantee against the Bank as a principal debtor, in the first instance without proceeding against the Contractor and notwithstanding any security or other guarantee that the Employer may have in relation to the Contractor's liabilities.

This Guarantee shall remain in force upto and including…….. [5] and shall be extended from time to time on the request of the Employer for such period as may be desired by the Employer.

This Guarantee shall not be determined or affected by liquidation or winding up, dissolution or change of constitution or insolvency of the Contractor/Supplier but shall in all respects and for all purposes be binding and operative until payment of all money payable to the Employer in terms hereof. However, unless a demand or claim under this Guarantee is made on us in writing on or before the ……[6] (3 months more than the present date of validity of Bank Guarantee) we shall be discharged from all liabilities under this Guarantee.

We, …… BANK lastly undertake not to revoke this guarantee during its currency except with the previous consent of the Employer in writing.

Notwithstanding anything to the contrary contained hereinabove:

a) The liability of the Bank under this Guarantee shall not exceed…… [7]
b) This Guarantee shall be valid up to ……[8]
c) Unless the Bank is served a written claim or demand on or before _____ [9] (3 months more than the present date of validity of Bank Guarantee) all rights under this guarantee shall be forfeited and the Bank shall be relieved and discharged from all liabilities under this guarantee irrespective of whether or not the original bank guarantee is returned to the Bank

We, _____ Bank, have power to issue this Guarantee under law and the undersigned as a duly authorized person has full powers to sign this Guarantee on behalf of the Bank.

Any claim or dispute arising under the terms of this document shall only be enforced or settled in the courts of at Kolkata only.

For and on behalf of
(Name of the Bank)

Date…….
Place of Issue…….

[1] *NAME OF VENDOR /CONTRACTOR / SUPPLIER*

[2] *DETAILS ABOUT THE NOTICE OF AWARD/CONTRACT REFERENCE*

[3] *PROJECT/SUPPLY DETAILS*

[4] *BG AMOUNT IN FIGURES AND WORDS*

[5] *VALIDITY DATE*

[6] *DATE OF EXPIRY OF CLAIM PERIOD*

[7] *BG AMOUNT IN FIGURES AND WORDS*

[8] *VALIDITY DATE*

[9] *DATE OF EXPIRY OF CLAIM PERIOD*

Note:

1. **Units are advised that expiry of claim period may be kept 2/3 months after validity date.**

2. **In Case of Bank Guarantees submitted by Foreign Vendors-**

   a. **From Nationalized/Public Sector / Private Sector/ Foreign Banks (BG issued by Branches in India)** can be accepted subject to the condition that the Bank Guarantee should be enforceable in the town/city or at nearest branch where the Unit is located i.e. Demand can be presented at the Branch located in the town/city or at nearest branch where the Unit is located.

   b. **From Foreign Banks (wherein Foreign Vendors intend to provide BG from local branch of the Vendor country's Bank)**

   b.1 In such cases, in the Tender Enquiry/ Contract itself, it may be clearly specified that Bank Guarantee issued by **any of the Consortium Banks only** will be accepted by BHEL. As such, Foreign Vendor needs to make necessary arrangements for issuance of Counter- Guarantee by Foreign Bank in favour of the Indian Bank (BHEL's Consortium Bank). It is advisable that all charges for issuance of Bank Guarantee/ counter- Guarantee should be borne by the Foreign Vendor. The tender stipulation should clearly specify these requirements.

   b.2 **In case, Foreign Vendors intend to provide BG from** Overseas Branch of our Consortium Bank (e.g. if a BG is to be issued by SBI Frankfurt), the same is acceptable. However, the procedure at **sl.no. b.1** will required to be followed.

   b.3 The BG issued may preferably be subject to Uniform Rules for Demand Guarantees (URDG) 758 (as amended from time to time). In case, of Foreign Vendors, the BG Format provided to them should clearly specify the same.

   b.4 The BG should clearly specify that the demand or other document can be presented in electronic form.

Form No: F-13 (Rev 00)

FORM for EXTENSION OF VALIDITY OF BANK GUARANTEE

1. **To be typed on non judicial Stamp Papers of value as applicable in the State of India from where the BG has been issued or the State of India where the BG shall be operated**
2. **The non judicial stamp papers shall be purchased in the name of the Party on whose behalf the BG is being issued or the BG issuing Bank**

BANK GUARANTEE No: Date:……..

To

(Write Designation and Address of Officer of BHEL inviting the Tender)

Dear Sir

Sub : Validity of Bank Guarantee No:……. Dated ……. for ……. Rs …… in favour of yourself, expiry date ……., on account of M/s …… in respect of Contract Number..……., (herein after called the Original bank Guarantee)

At the request of M/s……., we …….. Bank, having its branch Office at …….. and having Head office at ……, do hereby extend our liability under the above mentioned Bank Guarantee number…….. dated …… for a further period of ……..Months/years from …… to expire on ……..

Except as provided above, all other terms and conditions of the Original Bank Guarantee No ……. Dated…… shall remain unaltered and binding on us.

Kindly treat this extension as an integral part of the original Bank Guarantee to which it would be attached.

Yours faithfully

Signature…….
Name & Designation……..
Power of Attorney/Signing Power No
Seal of Bank

MONTHLY PERFORMANCE EVALUATION OF CONTRACTOR

Project		**Vendor**			**Package/Unit**	
Sl. No.	**Parameter for Measurement**	**Classification**	**Max Score**	**Score Obtained**	**Measurement Key/Scheduled date**	**Supporting Documents**
#1.01	Cumulative number of days in the month, the nominated Quality Officer or his authorised nominee was not available	QUALITY	1.5		Quality Officer or his authorised nominee should be available for all the days of working at site	Daily Log Book entry/Incident Registers/letter references
#1.02	Number of instances of non- compliance wrt FQP, Standard Drawings, Specifications, E&C Manuals etc.	QUALITY	1.5		No deviation from FQP, Standard Drawings, Specifications, E&C Manuals etc. is allowed without BHEL Engineer's approval.	Daily Log Book entry/Incident Registers/letter references
#1.03	Percentage submission of test certificates for batches of welding electrodes, cement, sand, aggregate, consumable, Paints etc. as applicable for this month OR In case of MM & MH package, monthly checks for Storage/Preservation of material.	QUALITY	1		Submission of 100% Test certificates for materials as per FQP is mandatory. MM & MH package: Storage/Preservation as per manual/procedure.	Daily Log Book entry/Incident Registers/letter references
#1.04	Number of incidences of improper storage & preservation (not in accordance to the guidelines of BHEL MUs or approved FQP) of materials, consumables (viz. gases, welding electrodes & fluxes, fuel etc.) & bought-out items (paints, fasteners etc.) under the custody of the contractor	QUALITY	1		Total number of non-compliances	Daily Log Book entry/Incident Registers/letter references
#1.05	Rework/ Rejection instances in a month necessitated due to deviation from Standard Drawings /Specifications /Manuals /E&C procedures /FQPs or due to Poor Workmanship by contractor	QUALITY	2		Reworks/ Rejection should be as minimum as possible. Total number of reworks/ rejections due to reasons attributable to contractor.	Daily Log Book entry/Incident Registers/letter references
#1.06	Delay in preparation & submission of signed protocols / log sheets / site register / NDT test reports as per approved FQP/ Qualified Welder List along with photocopies of Welder ID cards / Welder Performance Evaluation records etc. in the month OR in case of MM / MH package reconciliation statement / verification report.	QUALITY	1		Within 2 days of measurements taken or within first 3 working days of next month, as advised by BHEL Engineer	Daily Log Book entry/Incident Registers/letter references
#1.07	Number of instances for Major equipment/product failure due to negligence/improper work/poor workmanship by contractor	QUALITY	1		No such event should happen	Daily Log Book entry/Incident Registers/letter references
#1.08	Total number of complaints received in the month on the quality of finish / aesthetics	QUALITY	1		Total number of non-compliances	Daily Log Book entry/Incident Registers/letter references

MONTHLY PERFORMANCE EVALUATION OF CONTRACTOR

Project		**Vendor**			**Package/Unit**	
Sl. No.	**Parameter for Measurement**	**Classification**	**Max Score**	**Score Obtained**	**Measurement Key/Scheduled date**	**Supporting Documents**
#2.01	Cumulative number of days of delay in submission of Plan FOR THE MONTH supported by deployment plan of Major T&Ps and Manpower (as per Form F-14) and relevant construction/layout drawings - like A4 plan / elevation views of plan status for structures / pressure parts/Civil Works, Piping isometrics for piping, Layout / PID / System reference sketch, Unloading / storage plans etc.as applicable.	PERFORMANCE	5		Number of days delayed from second working day of the month	Daily Log Book entry/Incident Registers/letter references
#2.02	Percentage of timely submission of Daily Reports for Progress of work, Resources, Consumables etc.	PERFORMANCE	1.5		Percentage of timely submission of daily reports/ Scheduled date is successive next day for each day	Daily Log Book entry/Incident Registers/letter references
#2.03	Number of days delayed for submission of FQP log sheets / protocols / Monthly Progress Reports for the work executed during the month under measurement	PERFORMANCE	1.5		Number of days delayed/Scheduled date is first 2 working days of next month	Daily Log Book entry/Incident Registers/letter references
#2.04	Percentage Shortfall attributable to contractor w.r.t. “Plan - Shortfall attributable to BHEL” for the month as per Form-14	PERFORMANCE	35		As per Part-A of Form-14	Progress review formats
#2.05	Number of days delayed in submission of Running bills with complete supporting documents (including updated reconciliation statement of BHEL issued material) for the month	PERFORMANCE	2		Number of days delayed / Scheduled date is 7th day of next month	Daily Log Book entry/Incident Registers/letter references
#2.06	Number of times the Top Management of contractor did not respond to critical issues of site, for the month	PERFORMANCE	1		Total number of instances	Daily Log Book entry/Incident Registers/letter references
#2.07	Cumulative number of days in the month the works were stopped / refused on interpretation of contract clauses/scope due to tendency of taking undue advantage by interpreting contract clauses in their favour	PERFORMANCE	2		Cumulative number of days lost	Daily Log Book entry/Incident Registers/letter references
#2.08	Number of times rework was refused by contractor	PERFORMANCE	1		Total number of non-compliances	Daily Log Book entry/Incident Registers/letter references

Project		**Vendor**			**Package/Unit**	
Sl. No.	**Parameter for Measurement**	**Classification**	**Max Score**	**Score Obtained**	**Measurement Key/Scheduled date**	**Supporting Documents**
#2.09	Cumulative number of days in the month recording / logging was not done in daily log / history register / hindrance register / soft form in a PC maintained at BHEL Site Office	PERFORMANCE	1		Cumulative number of days recording or logging was not done / all days of the month	Daily Log Book entry/Incident Registers/letter references
#3.01	Percentage of Manpower Deployed w.r.t. Plan for the month as per Form-14.	RESOURCES	7		As per Part-B2 of Form-14	Daily Log Book entry/Incident Registers/letter references
#3.02	Percentage of T&P Deployed w.r.t. Plan for the month as per Form-14.	RESOURCES	7		As per Part-B1 of Form-14	Daily Log Book entry/Incident Registers/letter references
#3.03	Cumulative number of major instances in the month hampering / affecting progress of work due to breakdown or non-availability of major T&P and MME for the work, under the scope of Contractor	RESOURCES	3		Cumulative number of instances	Daily Log Book entry/Incident Registers/letter references
#3.04	Cumulative number of major instances in the month hampering / affecting progress of work due to non-availability of Consumables/ use of improper consumables under the scope of contractor	RESOURCES	3		Cumulative number of instances	Daily Log Book entry/Incident Registers/letter references
#4.01	Number of non-compliances during the month for Statutory requirements like validity of Labour Licence, Insurance Policy, Labour Insurance, PF, BOCW Compliance etc. and any other applicable laws/ Regulation, Electrical Licence, T&P fitness certificate, Contractors' All Risk Policy etc. as applicable	SITE INFRASTRUCTURE & SERVICE	1		Total number of non-compliances	Daily Log Book entry/Incident Registers/letter references
#4.02	Cumulative number of days in a month poor illumination is reported at storage area, erection area, pre-assembly area and other designated areas by BHEL site.	SITE INFRASTRUCTURE & SERVICE	0.5		Total number of non-compliances/random checks	Daily Log Book entry/Incident Registers/letter references
#4.03	Cumulative number of days of non-availability of well-maintained toilets facilities for workers (separate for men and women) and non-availability of potable drinking water stations for workers in specified areas.	SITE INFRASTRUCTURE & SERVICE	1		Total number of non-compliances/random checks	Daily Log Book entry/Incident Registers/letter references

Project		**Vendor**			**Package/Unit**	
Sl. No.	**Parameter for Measurement**	**Classification**	**Max Score**	**Score Obtained**	**Measurement Key/Scheduled date**	**Supporting Documents**
#4.04	Total number of instances in the month, Housekeeping NOT attended to in spite of instructions by BHEL -i.e. removal / disposal of surplus earth / debris / scrap / unused / surplus cable drums / other electrical items / surplus steel items / packing materials, thrown out scrap like weld butts, cotton waste etc. from the working area to identified locations	SITE INFRASTRUCTURE & SERVICE	2		Total number of non-compliances/random checks	Daily Log Book entry/Incident Registers/letter references
#4.05	Total number of instances in a month, Site Office with reasonably good facilities including enough nos. of computers and printers etc. for use by office and supporting staff was not made available/maintained.	SITE INFRASTRUCTURE & SERVICE	0.5		No discrepancy during regular or surprise visits	Photograph and report of the Engineer
#5.01	Number of days delayed in making labour payments for the last month	SITE FINANCE	2		Number of days delayed / Scheduled date is 7th day of next month	Daily Log Book entry/Incident Registers/letter references
#5.02	Number of complaints from labour/ sub supplier/ sub-contractor for non-receipt of payments from contractor	SITE FINANCE	1.5		Total number of complaints or reporting	Daily Log Book entry/Incident Registers/letter references
#5.03	Number of times the site operations were hampered for want of funds at the disposal of site-in-charge.	SITE FINANCE	1.5		Total number of non-compliances	Daily Log Book entry/Incident Registers/letter references
#6.01	Cumulative number of days in a month the nominated Safety Officer was not available	HSE & SA	1		Safety Officer should be available for all the days	Daily Log Book entry/Incident Registers/letter references
#6.02	Shortfall in number of weekly safety meetings in the month conducted or attended by the Safety Officer	HSE & SA	0.5		Safety meetings to be held every week	Copy of Minutes of meeting
#6.03	Level of compliance w.r.t decisions taken in previous Safety meetings	HSE & SA	0.5		Number of consolidated issues discussed in Safety meetings	Copy of Minutes of meeting, Non-compliance intimation documents from BHEL site
#6.04	Delay in submission of monthly report on safety (including electrical safety for equipment & personnel etc.) in the prescribed form	HSE & SA	1		Number of days delayed/Scheduled date is third working day of next month	Daily Log Book entry/Incident Registers/letter references
#6.05	Number of days taken for lodging FIRs from date of occurrence/notice of incident of theft / accident etc.	HSE & SA	0.5		Number of days delayed/Scheduled date is within 24 Hrs of occurrence/notice of incidence	Copy of FIR lodged by Contractor

Project		**Vendor**			**Package/Unit**	
Sl. No.	**Parameter for Measurement**	**Classification**	**Max Score**	**Score Obtained**	**Measurement Key/Scheduled date**	**Supporting Documents**
#6.06	Number of times written(email, letters etc.) warning issued for non-availability/ use of improper Fall protection and rescue arrangement as lifeline, fall arrestors, safety net, hand-railings, covered floors, man-basket, rescue basket & kit etc. by the contractor	HSE & SA	2		Total number of non-compliances	Daily Log Book entry/Incident Registers/letter references
#6.07	Number of times punitive fines imposed for unsafe practices as per contract like non-availability/use of PPEs as safety shoes, helmets, goggles, gloves, lifeline, safety belts etc.	HSE & SA	1		Total number of non-compliances	Non-compliance intimation documents from BHEL site
#6.08	Percentage compliance to Emergency preparedness and response plan: Portable Fire-extinguishers, Buckets, Fire-wardens, display of emergency numbers, mock-drills, Hazard Identification and Risk Assessment(HIRA) etc.	HSE & SA	1		Compliance should be 100% as per HSE Plan or as finalized in Safety Meetings	Non-compliance intimation documents from BHEL site
#6.09	Number of times the agency has defaulted on display of safety posters / safety slogans / safety barriers/emergency numbers etc. in identified areas	HSE & SA	0.5		Total number of instances	Non-compliance intimation documents from BHEL site
#6.10	Non compliances observed during HSE and Safety Audit	HSE & SA	0.5		Total number of non-compliances	Non-compliance intimation documents from BHEL site, Audit Reports
#6.11	Cumulative number of days in the month, non-availability of First Aid Kit, First Aider & Emergency Vehicles/Ambulance.	HSE & SA	0.5		Cumulative number of days	Non-compliance intimation documents from BHEL site
#6.12	Number of days taken for submission of Root Cause analysis (RCA) for the accident from the cut-off date intimated by BHEL for submission of RCA	HSE & SA	0.5		Number of days delayed/Scheduled date is cut-off date intimated by BHEL	Daily Log Book entry/Incident Registers/letter references
#6.13	Non conductance of training (induction, job specific, height work etc.), tool box meeting and health check-up as per Contract requirements	HSE & SA	0.5		Number of incidences of non-conductance during the month	Daily Log Book entry/Incident Registers/letter references
		Total	**100**			

MONTHLY PERFORMANCE EVALUATION OF CONTRACTOR

Project		**Vendor**			**Package/Unit**	
Sl. No.	**Parameter for Measurement**	**Classification**	**Max Score**	**Score Obtained**	**Measurement Key/Scheduled date**	**Supporting Documents**
Less Deduction in Score Due to Major Accidents (Fatal, Permanent Disability or bodily injury by which person injured is prevented to resume to work within 48 hours or more after accident,, Major Damage to Equipment etc.) attributable to the contractor @ 3 points/ accident						
Less Deduction in Score Due to Minor Accidents attributable to the contractor @ 1 point/ accident						
Less Deduction in Score Due to not Maintaining of Labour Colony (if applicable) as per BHEL HSE policy @2 points in a month on verification any day						
				Final Score		

Performance Score Summary for the Month	**Total Score**	**Score Obtained**
QUALITY	10	
PERFORMANCE	50	
RESOURCES	20	
SITE INFRASTRUCTURE & SERVICE	5	
SITE FINANCE	5	
HSE & SA	10	
OTHERS (deductions if any)	0	
TOTAL	**100**	

Note:

1) It is only indicative and shall be as per the online format issued by BHEL time to time.
2) No request will be entertained after specified date of current month w.r.t. changes requested in the scores of immediate previous month.

Form No: F-19 (Rev 00)

MILESTONE COMPLETION CERTIFICATE
(issued by BHEL on the specific request of Contractor)

Ref :
Date:

To,

(Name & address of Contractor)

Dear Sir,

References
1. Contract No:
2. Job Description:

This is to hereby confirm that the following Milestone Activity has been achieved in respect of the Contract /Job under reference

Sl No	Milestone Activity	Remarks

This certificate is issued as per your request vide letter no …… without any prejudice to the rights of BHEL in line with the terms and conditions of the above referred Contract

Yours faithfully,

For and on behalf of Bharat Heavy Electricals Limited

Construction Manager/Head (Subcontracts)

Form No: F-20 (Rev 01)

CONTRACT COMPLETION CERTIFICATE
(Issued by BHEL/HQ on the specific request of Contractor)

Ref :
Date:

To Whom so ever it may concern

1	DESCRIPTION OF WORK	
2	NAME AND ADDRESS OF THE CONTRACTOR	
3	CONTRACT NO	
4	CONTRACT VALUE	
5	LETTER OF INTENT NO & DATE	
6	CONTRACT PERIOD//CONTRACT DURATION	
7	DATE OF START/COMPLETION	
8	FINAL EXECUTED VALUE	
9	PERFORMANCE	GOOD SATISFACTORY UNSATISFACTORY

This certificate is issued as per your request vide letter no …….
without any prejudice to the rights of BHEL to use this certificate for evaluation of your offers for future tenders

Yours faithfully,

For and on behalf of Bharat Heavy Electricals Limited

Head (Subcontracts)

Form No: F-21 (Rev 00)

INDEMNITY BOND

(To be executed on a Non Judicial Stamp Paper of the requisite value as per Stamp Duty prevalent in the respective State)

This Indemnity Bond executed by <name of company> having their Registered Office at <xxxxxxxxxx> in favour of M/s Bharat Heavy Electricals Limited, a Company incorporated under the Companies Act, 1956, hav ing its R egistered Office at BH EL House, Siri Fort, Asiad, Ne w Delhi - 110049 through its U nit at Power Secto r-_____ Region, ____ _____, _____ State. (Hereinafter referred to as the Company)

And whereas the Company has entered into a Contract with M/s xxxxxxxxx, th e executants of this D eed (hereinafter refe rred to as the Contractor) as it s contractor in respect of the work of "xxxxxxxxxxxxxxxxxxxxxxxxxx".

AND WHEREAS under the provisions of G CC further stipulates that the Contractor shall indemnify the Company against all claims of w hatever nature aris ing during the course of execution of Contract including defects liability period of <xx Months > i.e till <xx xx xxxx>

Now this deed witnes s that in case the Company is made liable by any Authority including Court to pay any claim or compensation etc. in respect of all labour ers or other matters at any stage under or relating to the Contract with the C ontractor , the Contractor hereby covenants and agrees with the C ompany that they shall indemnify and reimburse the Company to the extent of such payments and for any fee, including litigation charges, lawyers' fees, etc, penalty or damages claimed against t he Company by reason of th e Contractor falling to comply with Central/States Laws, Rules etc, or his failure to comply with Contract (including all expenses and charges incurred by the Company).

The Contractor further indemnifies the Company for the amount which the Company may be liable to pay by way of penalty for not mak ing deductions from the Bills of the Contractor towards such amount and depositing the same in the Government Treasury.

The Contractor further agree that the Company shall be entitled to with hold and adjust the Security Deposit and/or with ho ld and adjust payment of Bills of Contractor pertaining to this Contract against any payme nt which the Company has made or is required to mak e for which the Contractor is liab le under the Contract and that such amount can be withheld, adjusted by the Company till satisfactory and final settlement of all pending matters and the Contractor hereby gives his consent for the same.

The Contractor further agrees that the terms of indemnity shall s urvive the ter mination or completion of this contract.

The contractor further agrees that the liability of the contractor shall be extended on actual basis notwithstanding the limitations of liability clause, in respect of :

1. breach of terms of contract by the contractor
2. breach of laws by the contractor
3. breach of Intellectual property rights by the contractor
4. breach of confidentiality by the contractor

Nothing contained in this deed, shall be construed as absolving or limiting the liability of the Contractor under said Contract between the Company and the Contractor . That this Indemnity Bond is irrevocable and the condition of the bond is that the Contractor shall duly and punctually c omply with the terms and the conditions of this deed and contractu al provisions to the satisfaction of the Company.

In witness where of M/s xxxxxxxxxxxxx these presents on the day, month and year first, above written at xxxxxxxx by the hand of its signatory Mr. xxxxxxxxxx.

Signed for and on behalf of
M/s xxxxxxxxxxxxxx

Witness:
1
2

Form No: F-22 (Rev 00)

CONSORTIUM AGREEMENT

(To be executed on Rs. 50/- Non – Judicial Stamp Paper)

THIS AGREEMENT is made and executed on this _____ day of _____, by and between (1) M/s _____ , (The First Party, i.e, the Bidder) a company incorporated under the Company's Act 1956, having its registered office at _____ _____(herein after called the "Bidder", which expression shall incl ude its' successors, administrators, executors and permitted assigns) and (2) M/s _____ _____, (The Second Party, i.e, the associates), a company incorporated under th e Company's Act 1956, having its registered office at _____ (herein after called the " Associates", whic h expression shall include its' successors, administrators, executors and permitted assigns).

WHEAEAS the Owner, Bharat Heavy Electr icals Ltd, a Government of India Undertaking, proposes to issue / issued an NIT (herein after referred to as the said NIT) inviting bids from t he individual Bidders for undertaking the work of _____, at _____ (herein after referred to as the said works).

WHEREAS the said NIT enables submis sion of a bid by a Consortium subject to fulfillment of the stipulations specified in the said NIT.

AND WHEREAS M/s _____ _____ (The F irst Party, i.e, the Bidder) will submit its proposal in response to the aforesaid invitation to bid by the Owner for _____ as detailed in the Bid doc. no. < TENDER REF-------->

AND WHEREAS M/s _____ _____ (The First Party, i.e the Bidder) itself is meeting all the qualifying requirements except the qualifying requirements of _____ _____ (as detailed in the NIT) and in order to fully meet the qualifying requirements of NIT, this tie-up agreement is being entered into with M/s _____ (The Second Party, the Associates), who fully meet the balance part of the said works (_____).

WHEREAS the First Party and the Second Party are contractors engaged in the business of carrying out various items of works. WHEREAS the two parties have agreed to constitute themselves into a consortium for the purpose of carrying out the said works, and that the consortium will be continued till the completion of the works in all respects.

WHEREAS the parties have agreed to certain terms and conditions in this regard:

NOW THEREFORE THIS AGREEMENT WITNESSETH AS FOLLOWS :

1. First and Second parties hereby constitute themselves into a Consortium for the purpose of bidding and undertaking the said works pursuant to the said NIT as hereinafter stated.

2. The First Party will be the leader (Lead Partner) and will be responsible for the entire works.

CONSORTIUM AGREEMENT

3. The First Party shall undertake the following part(s) of work detailed in the NIT namely

_____
_____
__

4. The Second Party shall undertak e the following part(s) o f work detailed in the said NIT namely

_____
_____
__

5. The parties hereby d eclare and confirm that each of them will fulfill the required minimum qualifying requi rements as prescribed in the said NIT for the wor ks agreed to be undertaken by them as stated here-in-above.

6. It is also agreed between the parties hereto that all of them shall be individually and severally responsibl e for the completion of the said works as per the schedule. Further, if the Employ er/Owner sustains any loss or damage on a ccount of any breac h of the C ontracts, we the, Consortium partners individually and severally undertake to promptly indemnify and pay such losse s / damages caused to the Employer/Owner on it s written dem and with out any demur , reservation, contest or protest in any manner whatsoever.

7. The parties hereby agree and under take that they shall provide adequate finances, suitable Tools, Plan ts, Tractors, Trailers, other transportation equipment, other Tools & Plant s, Measuring & Monitoring Equipments (MME s), Men and Machinery etc. for the proper and effective execution of the works to be undertaken by them as specified here-in-above.

8. It is agreed interse between t he parties hereto that all the consequences liabilities etc., arising out of any default in the due execution of the said works shall be borne by the party in default, that is by party in whose area of works default has occurred, provided however, so far as M/s Bharat Hea vy Electricals Limited is concer ned, all the parties shall be liable jointly and severally.

IN WITNESS HEREOF the parties above named have signed this agreement on the day month and year first above written at _____(Place) .

WITNESS For

1. NAME (FIRST PARTY)

2. OFFICIAL ADDRESS

WITNESS For

1. NAME (SECOND PARTY)

2. OFFICIAL ADDRESS

[The successful bidder shall have to execute the " JOINT DEED OF UNDERTAKING " in the format to be made available by BHEL at the time of awarding].

Form No: F-23 (Rev 00)

REFUND OF SECURITY DEPOSIT

To,
The Construction Manager
BHEL Site Office

Dear Sir,

Sub : **Refund of Security Deposit**
Ref : Contract No: ……,
Work:……..
I/We have submitted Final Bill in respect of the above Contract/Work vide our letter no:…… dated …….. . In line wit h Tender c onditions (GCC clause no 1.11), kindly arrange to release/refund the Security Deposit along with Final Bill payments.

The details of Security Deposit are as below:

1. Cash Portion :
2. BG Portion :

Thanking You

Date: _____ Authorised representative of Contractor

==========

To be filled up by BHEL

1. Security Deposit to be refunded:
    a. Cash Portion:
    b. BG Portion :
2. Less
    a. Amount spent by BHEL on behalf of Contractor:
    b. Payments made by BHEL on behalf of Contractor:
    c. Other recoveries for Services etc
    d. Any other recoveries
    e. Total of 'a' to 'd':
3. Net Amount to be released (1-2) :
4. Certified that
    a. The payment recommended for release is in order and there are no demands other than those included in the claim outstanding from the Contractor
    b. Contract Guarantee period of ……. Months commenced wef :_____
    c. All objections raised so far have been settled
    d. A note for refund of Security Deposit has been made in the Measurement Book

Signature of BHEL Engineer

Construction Manager

Date:----------

Form No: F-24 (Rev 00)

REFUND OF GUARANTEE MONEY

BHARAT HEAVY ELECTRICALS LIMITED
POWER SECTOR, _____ REGION

Ref No: Date:

1. Name and Address of Contractor :
2. Contract Agreement/LOI No :
3. Date of Contract Agreement/LOI :
4. Name of the Work undertaken :
5. Date of commencement of the Work :
6. Date of Completion of the Work :
7. Period of Maintenance : (Guarantee Period)
8. Date on which the Final Bill was paid :
9. Last date of making good the defect : during Maintenance Period
10. Expenditure incurred by BHEL during : Maintenance Period, if any, recoverable
11. Date on which Guarantee Money refund: falls due as per Contract
12. Amount of Guarantee Money to be refunded:
13. Less Amounts recoverable (with details)
    a. Amount spent by BHEL on maintenance :
    b. Payments made by BHEL on behalf of Contractor:
    c. Court dues/penalties/compensation :
    d. Other recoveries for Services, etc :
    e. Total of 'a' to 'd' :
14. Net Amount recommended for release (12-13) :

Signature of BHEL Engineer

Date: _____

CERTIFICATE TO BE FURNISHED BY THE CONTRACTOR

I/We have no claim or demand outstanding against BHEL_____, for the work done or for labour or material supplied or any other account arising out of or connected with the Contract Agreement/LOI (No_____ dated _____) and the payment of this bill shall be in full and final settlement of all my/our claims and demands including the 'Deposits' of the Contract Agreement/LOI referred to.

Signature of Contractor

Date:

CERTIFICATE TO BE FURNISHED BY SENIOR ENGINEER/CONSTRUCTION MANAGER

1. Certified that
   a. The payment recommended for release is in order and there are no demands other than those included in the claim outstanding from the Contractor
   b. Maintenance period (Contract Guarantee period) is over and the Contractor has carried out the works required to be carried out by him during the period of maintenanc e (Guarantee) to our satisfaction, and all expens es incurred by the Company on carrying out such works have been included for adjustment
   c. All objections raised so far have been settled
   d. A note for refund of Guarantee Amount has been made in the Meas urement Book and Contract Agreement/Work Order

Signature of BHEL Engineer

Construction Manager

Date:----------

FOR USE IN ACCOUNTS DEPARTMENT

Passed for Rs_____ (Rupees _____ only)

Accountant Accounts Officer

ACKNOWLEDGE BY THE CONTRACTOR

Received Rs _____ in full and final settlement of my/our claim

Signature of Contractor

Date:

Form No: F-25 (Rev 00)

POWER OF ATTORNEY for SUBMISSION OF TENDER/SIGNING CONTRACT AGREEMENT

(To be typed on non judicial Stamp Papers of appropriate value as applicable and Notarised)

KNOW ALL MEN BY THESE PRESENTS, that I/We do hereby make, nominate, constitute and appoint Mr …… …….. , whose signature given below herewith to be true and lawful Attorney of M/s…… hereinafter called 'Company', for submitting Tender/entering into Contract and inter alia, sign, execute all papers and to do necessary lawful acts on behalf of Company with M/s Bharat Heavy Electricals Ltd, Power Sector _____ Region, _____, in connection with …… …… …… vide Tender Specification No : _____, dated _____.

And the Company do hereby agree to ratify and confirm all acts, deeds, things or proceedings as may be lawfully done by the said attorney and by or on behalf of the company and in the name of the company, by virtue of the powers conferred herein and the same shall be binding on the company and shall have full force and effect.

IN WITNESS WHEREOF the common seal of the company has been hereunto affixed in the manner hereinafter appearing on the document.

Dated at _____, this _____ day of _____

Director/CMD/Partner/Proprietor

Signature of Mr……(Attorney)

Attested by: Director/CMD/Partner/Proprietor

Witness

Notary Public

Form No: F-26 (Rev 00)

ANALYSIS OF UNIT RATES QUOTED

(To be typed and submitted in the Letter Head of the Company/Firm of Bidder)

Offer Reference No:…… Date:……

To,
(Write Name & Address of Officer of BHEL inviting the Tender)

Dear Sir,

Sub : Analysis of Unit Rates Quoted
Ref : Tender Specification No: ……

Analysis of Unit Rates quoted by us in respect of above Tender is as detailed

SN	DESCRIPTION	% OF QUOTED RATE	REMARKS
01	SITE FACILITIES VIZ., ELECTRICITY, WATER OTHER INFRASTRUCTURE.		
02	SALARY AND WAGES + RETRENCHMENT BENEFITS		
03	CONSUMABLES		
04	T&P DEPRECIATION & MAINTENANCE		
05	ESTABLISHMENT & ADMINISTRATIVE EXPENSES		
06	OVERHEADS		
07	PROFIT		
	TOTAL	100%	

Yours faithfully,

(Signature, Date & Seal of Authorized Representative of the Bidder)

Form WAM 6

BHARAT HEAVY ELECTRICALS LIMITED
DIVISION.....
Running Account Bill
(Para 4.31.1 of Works Accounts Manual)

Name of the Contractor: Departmental Bill no: Date:
Name of the Work: Division: Sub-Division:
Sanctioned Estimate: Date of written order to commence the work :
Code No: Date of commencement of the Work:
Contract Agreement No : Dated: Due date of completion as per Agreement:

1. ACCOUNT OF WORK EXECUTED

On account payment for work not previously previously measured**			Item No of	Description of Work	Quantity as per agree-ment	Quantity executed up to date	Rate	Unit	Payment on the basis of actual measure-ment up to date	Quantity since last running account bill	Payment on the basis of actual measurement since last running account bill		Remarks
Total As per Running Account bill	since last running account bill	Total up to date											
Rs.	Rs.	Rs.					Rs.	P.	Rs.	P.	Rs.	P.	
1	2	3	4	5	6	7	8	9	10	11	12		13

* *1. Whenever payment is made on 'on account' basis without actual measurements the amount in whole rupees should be entered in columns 1 to 3 only and not in columns 7 to 12.
2. whenever there is an entry in column 12 on the basis of actual measurement, the whole of the amount previously paid without detailed measurement should be adjusted by a minus entry in column 2 equivalent to the amount shown in column 1, so that the total up to date in column 4 may become nil.

Form WAM 6 (contd…)

1	2	3	4	5	6	7	8	9	10	11	12	13

	Total value of work done up to date	(A) …
Running Account Bill	Deduct value of work shown on the last (B) …	
	Net value of work done since last	(C) …

Rupees (in words)
…….only.

Form WAM 6 (contd…)

II.MEMORANDUM OF PAYMENTS

		Rs. P.	I Rs. P.	II Rs. P.
1.Total value of work actually measured as per Account No. I. Column 10	(A)	……		……
2.Total up to date 'on account' payment for work covered by approximate Or plan measurements as per Account No. I, Column 3	(B)	……		……
3.Total up to date secured advances on security of materials as per column 8 Of the enclosed Account (Form WAM 10)	(C)	……		……
4.Total up to date payments [(A) + (B) + (C)]	(D)	……		……
5.Total amount of payments already made as per Entry (D) of last Running Account Bill No…….. Dated……..forwarde to the Accounts Office on …….	(E)			
6.Balance [(D)-(E)]		…….……		
7.Payments now to be made:				
a) by cash/cheque			……	
b) by deduction for value of materials supplied				
c) by BHEL vide Annexure A attached			……	
d) by deduction for hire of tools and plant vide				

Annexure B attached ……

e) by deduction for other charges vide Annexure C

Attached ……

f)by deduction on account of security deposit ……

h) by deduction on account of Income Tax …… ……

Note: Amounts relating to items 4 to 6 above should be entere in column II and those relating to item 7 in column I. The amount shownagainst item 6 and the total of item 7 should agree with each other.

III.CERTIFICATE OF THE ENGINEER IN CHARGE **Form WAM 6 (contd…)**

1. The measurements on which the entries in column 7 to 12 of Part I of this Bill (Account of work executed) are based were made by……and are recorded at pages……..of
(Name and Designation)

Measurement Book No ……..

2. Certified that the methods of measurement are correct and the work has been carried out in accordance with the terms and conditions, schedules, specifications and drawings etc, forming part of the contract agreement, subject to deviations included in the deviation statement (Annexure D).
3. Certified that in addition to and quite apart from the quantities of work actually executed as shown in column 10 of Part I, some work has actually been done in connection with several items and the value of the such work is, in no case, less than 'on account' payments as per column 3 of Part I, made or proposed to be made, for the convenience of the contractor in anticipation of, and subject to the results of, detailed measurement which will be made as soon as possible.

Signature of Contractor Signature of Engineer in charge

Date: Designation:

Date:

IV. CERTIFICATE OF THE SENIOR ENGINEER

1. Certified that measurements have been check measured to the prescribed extent by ……... ……at site and also by the undersigned and the relevant entries have been intialled in the Measurement book. (vide pages……)
(Name and Designation)
2. Certified that all the measurements recorded in the measurement book have been correctly billed for
3. Certified that all recoberable amounts in respect of materials tools and plant etc, and other charges have been correctly made vide Annexures A to C attached.

Certified for payment * of Rs…….(Rupees…….only)
To be paid in cash/by cheque in the presence of …….

ALLOCATION

The expenditure is chargeable as under and to be included in the accounts for……20……

Ledger Head	Debit (Gross amount) Rs. P.	Credit (Deductions) Rs. P.
_____	_____	_____
Total	_____	_____
	_____	_____

* Here specify the net amount payable.

Signature of Senior Engineer
Date:

Form WAM 6 (contd…)

V.ENTRIES TO BE MADE IN THE ACCOUNTS OFFICE

Accounts Bill No ……Dated……..
Entered in Journal Book vide entry No…….Dated…….
Passed for……Rs……
Less Deductions……..Rs……
Net Amount Payable……Rs……...
(Rupees…….only)
Payable to Shri/M/s……by cheque/cash
Entered in Contractor's Ledger No……Page……..

ALLOCATION

Estimate No: Code no:
Name of the Work:

Ledger Head	Debit (Gross amount) Rs. P.	Credit (Deductions) Rs. P.
_ _ _ _ _ _ _ _	_ _ _ _ _ _ _ _	_ _ _ _ _ _ _ _ _ _
	_ _ _ _ _ _ _ _	_ _ _ _ _ _ _ _ _ _

Total _ _ _ _ _ _ _ _ _ _ _ _ _ _ _ _

Assistant Accountant Account Officer
Date: Date: Date:

VI. Received Rs.....(Rupees.....only) as per Memorandum of Payments on account of this work.

Signature of witness Revenue
Address :

Stamp
Signature of Contractor
Date: Date:

VII. ENTRIES TO BE MADE BY TREASURY SECTION

Cash Book entry No. and date: Amount paid Rs.....

Amount unpaid Rs.....

Total Rs.....

Signature of Cashier
Date:

Form WAM 6 (contd...)

ANNEXURE A

Statement showing details of materials issued to the contractor Shri/M/s……

In respect of Contract Agreement No ……..Dated……

Sl. No.	Stores issue Voucher No. and date	Issue voucher No. and date allotted by stores to the SIV	Description of material issued to the contractor	Quantity issued	Quantity actually incorp-rated in the work	Whether recover-able from the contrac-tor or supplied free	If recoverable from the contractor				REMARKS
							Rate at which recover-able	Amount recover-able	Amount recover-ed up to previous bill	Balance now recover-ed	
							Rs. P.	Rs. P.	Rs. P.	Rs. P.	
1	2	3	4	5	6	7	8	9	10	11	12
			Total								

Signature of contractor — Signature of Engineer in Charge — Signature of Senior Engineer

Date: — Date: — Date:

Form WAM 6 (contd…)

ANNEXURE B

Statement showing tools and plant issued to the contractor Shri/M/s……

In respect of Contract Agreement No ……..Dated……

Sl. No	Description of tools and plant issued	Period for which Issued	Rate at which recovery Is to be Made Rs. P.	Amount recover-able Rs. P.	Amount recovered upto previous bill Rs. P.	Balance now recovered Rs. P.	Remarks
1	2	3	4	5	6	7	8
			Total				

Signature of contractor — Signature of Engineer in Charge — Signature of Senior Engineer

Date: — Date: — Date:

Form WAM 6 (contd…)

ANNEXURE C

Statement showing details of other recoveries to be made from the contractor Shri/M/s……..……

In respect of Contract Agreement No ……..Dated……

Sl. No	Particulars	Unit	Quantity	Rate	Amount recover-able	Amount recovered upto pre-vious bill	Amount now recovered	Remarks
				Rs. P.	Rs. P.	Rs. P.	Rs. P.	
1	2	3	4	5	6	7	8	9
1.				Water Charges				
2.				Electricity charges				
3.				Seignorage charges				
4.				Medical charges				
5.				Cost of empty gunny bags and Empty containers not returned				
6.								
7.								
8.								
9.								

10.

Total

Signature of contractor | Signature of Engineer in Charge | Signature of Senior Engineer

Date: | Date: | Date:

Form WAM 6 (contd…)

ANNEXURE D

Name of the Contractor: Contract Agreement No:
Name of the Work: Date:

Sl. No.	Description of item	Unit	Quantity as per Agreement	Quantity as executed	Quantity further anticipated	Total quantity anticipated on completion	Rate as per agreement Rs. P.
1	2	3	4	5	6	7	8

Rate as the executed with any Rs. P.	Amount as per agreement Rs. P.	Amount as executed Rs. P.	Amount further anticipated Rs. P.	Total amount anticipated on completion Rs. P.	Difference _ _ _ _ _ _ _ _ _ _ _ Excess Rs. P.	savings Rs. P.	Reason for deviation authority, if
9	10	11	12	13	14	15	16

Signature of Engineer in Charge
Date:

Signature of Senior Engineer
Date:

BHARAT HEAVY ELECTRICALS LIMITED
DIVISION…………………
……………………And Final bill
(Para 4.3.2 Of Works Accounts Manual)

Name of Contractor		Departmental Bill no		Date	
Name of the Work		Division		Division	
Sanctioned Estimate		Date of written order to commence the work			
Contract Agreement/work Order No		Date of commencement of work			
		Due date of completion as per agreement			
		Date of actual completion of the work			

I. ACCOUNT OF WORK EXECUTED

On Account payment for the work not previously measured **												
Total as per last running account bill Rs.	Since last running account bill Rs	Total up to date Rs	Item No of the agreement/ work order	Description of work	Quantity as per agreement	Quantity executed up to date	Rate Rs. P	Unit	Payment on the basis of actual measurement up to date Rs P	Quantity since last running account bill	Payment on the basis of actual measurement since last running account bill Rs P	Remarks
1	2	3	4	5	6	7	8	9	10	11	12	13

BHARAT HEAVY ELECTRICALS LIMITED,
POWER SECTOR - EASTERN REGION, KOLKATA
TENDER NO. PSER:SCT:RKL-C2004:20

1	2	3	4	5	6	7	8	9	10	11	12	13
Total Value of Work Done up to date (A)												
Deduct Value of work shown on the last running account bill (B)												
Net value of work done since last running account bill (C)												
Rupees (In Words)………Only												

II MEMORANDUM OF PAYMENT												
										Rs.	P	
1	Total Value of work actually measured as per Account no I coloumn 10								(A)			
2	Deduct amount of paym,ents already made as per last running account bill No ……. Dated……. Forwarded to the Accounts Office on …….								(B)			
3	Payments now to be made { (A) - (B)}								(C)			
4	Deduct ammounts recoverable from the contractor on account of :								Rs	P		
	a	Material suplied by BHEL vide annexure A attached										
	b	Hire of Tools & Plants vide Annexure B attached										
	c	Other charges vide Annexure C attached										
	d	Income Tax										
		Total deduction										
5	Balance											
6	Refund of 50% of security deposite on completion of work											
7	Net amount to be paid to the Contractor											
III. CERTIFICATE OF THE ENGINEER IN CHARGE												
1	The measurement on which the entries in coulmns 7 to 12 of Part I of this bill (Account of work executed) are based were made by …….. (Name and designation)											
2	A statement showing the quantities of stores issued to the contractor (whether free or on recovery basis) and their disposal is attached.											
	Date:								Signature of Engineer in charge			
									Designation			

IV CERTIFICATE OF THE SENIOR ENGINEER

1 Certified that I have personally inspected the work and that the work has been physically completed on the due date in accordance with the terms and

2 Cretified that the measurements have been check measured to the prescribed extent by …….. …….. (Name & designation). And by the the undersigned at site and relevent entries have been initiated in the measurement book (vide pages…… ….)

3 Certified that the methods of measurement are correct

4 Certified that the measurements have been technically checked with reference to contract drawings, deviations etc

5 Certified that all the measurements recorded in the measurement book have been correctly billed for at the contract rates or approved rates.

6 Certified that all the recoverable amounts in respect of stores, tools and pa\lant, e\water, electricity charges etc, have been correctly made vide Annexures A

7 Certified that the issues of all stores as per statement atytached (whether charged to the contractor or direct to the work) have been technically checked and

Certified for payment of * Rs …… (Rupees…… (Only). To be paid in cash/by cheque in the presence of ……..

ALLOCATION

The expenditure as under and to be included in the accounts for ……..19

Ledger Head ……	Debit (Gross Amount) Rs. P ……	Credit (Deduction) Rs. P ……
Total	……	……

* Here specify the net amount payable

Signature of Senior Engineer

Date

V. ENTRIES TO BE MADE IN THE ACCOUNTS OFFICE

Account Bill no…… Dated ……

Entered in Journal book vide entry No……Dated……

Passed for……Rs……..

Less Deductions……..Rs……

(Rupees…….Only)

Payable to Shri/M/s…….... by cheque/cash

Entered in contractors' Ledger no..... Page

Assistant Accountant Accounts officer

Date: Date: Date:

ALLOCATION

Estimate No: Code No

Name of the Work ……

Ledger Head	Debit (Gross Amount) Rs P	Credit (Deduction) Rs
……	.....	.....
Total	.....	.....

VI. Received Rs……..(Rupees……..Only) in full and final settlement of all moneys due under this contract and I / we have no further claims of this contract.

Signature of Witness
Address

Revenue Stamp
Signature of Contractor
Date:

VII . ENTRIES TO BE MADE BY TREASURY SECTION

Cash book entry no and date :

Amount Paid Rs…….
Amount unpaid Rs……..
Total Rs……..

Signature of Cashier
Date:

ANNEXURE A

Part I

Statement showing details of material issued to the contractor Shri/M/s…….. In respect of Contract Agreement/Work Order No…….. Dated ……

Sl No	Stores Issue voucher No and date	Issue voucher No and date alloted by stores to the SIV	description of material issued to the contractor	Quantity issued	Quantity actually incorporated in the work	Whether recoverable from the contractor or supplied free	If recoverable from contractor				Remarks
							Rate at which recoverable Rs P	Amount Recoverable Rs P	Amount recoverable upto previous bill Rs P	Balance Now recovered Rs P	
1	2	3	4	5	6	7	8	9	10	11	12
						Total	……				
	Signature of Contractor					Signature of Engineer in charge				Signature of Senior Engineer	
	Date					Date				Date	

ANNEXURE A

Part II

Statement showing details of material issued to the contractor Shri/M/s…….. in respect of Contract Agreement/Work Order No…….. Dated ……..……and not covered by the agreement

Sl No	Stores Issue voucher No and date	Issue voucher No and date alloted by stores to the SIV	description of material issued to the contractor	Quantity issued	Quantity actually incorporated in the work	Issue Rate Rs P	Amount Recoverable Rs P	Amount recoverable upto previous bill Rs P	Balance Now recovered Rs P	Remarks
1	2	3	4	5	6	7	8	9	10	11
						Total	……			
						Add Departmental Charges Add Sales Tax (wherever applicable)	……..			
						Total	……..			
	Signature of Contractor					Signature of Engineer in charge				Signature of Senior Engineer
	Date					Date				Date

ANNEXURE B

Statement showing TOOLS & PLANTS issued to the contractor Shri/M/s…….. in respect of Contract Agreement/Work Order No…….. Dated ……and not covered by the agreement

Sl No	Description of tools & plants issued	Period for which issued	Rate at which Recivery is to be made	Amount recoverable Rs P	Amount recoverable upto previous bill Rs P	Balance Now recovered Rs P	Remarks
1	2	3	4	5	6	7	8
				Total	……		
	Signature of Contractor			Signature of Engineer in charge			Signature of Senior Engineer
	Date			Date			Date
ANNEXURE C							

howing detail of other recoveries to be made from the contractor Shri/M/s……
ent/Work Order No……Dated……

Sr.No	Particulars	Unit	Quantity	Rate Rs. P.	Amount recoverable Rs. P	Amount recovered upto previous bill Rs. P.	Amount now recovered Rs. P.	Remarks
1	2	3	4	5	6	7	8	9
1	Water Charges							
2	Electricity Charges							
3	Seignorage Charges							
4	Medical Charges							
5	Cost of empty gunny bags and empty containers not returned							
6								
7								
8								
9								
10								
		Total						

Signature of Contractor — Signature of Engineer Incharge — Signature of Sr. Engineer
Date — Date — Date

ANNEXURE F

Statement showing detail of materials issued to the contractor Shri/M/s……

t of Contract Agreement/Work Order No……Dated……

Name of work; **FREE OF COST**

Sr.No	Stores issue voucher No.	ription of ma	Unit	Quantity issued	Quantity requried as per data	Quantity consumed in the work	Balance(If any)	Nature of disposal for the balance	Rate chargeable for material not returned Rs.P.	Amount recoverable for material not returned Rs. P	Remarks
1	2	3	4	5	6	7	8	9	10	11	12
			Total								

Signature of Contractor — Signature of Engineer Incharge — Signature of Sr. Engineer

Date — Date — Date

Note:Data statement of therotical consumption should be attached in support of the quantity specified in coloumn 6

BHARAT HEAVY ELECTRICALS LIMITED
DIVISION……
……And Final bill
(Para 4.3.2 Of Works Accounts Manual)

Name of Contractor		Departmental Bill no		Date	
Name of the Work		Division		Division	
Sanctioned Estimate		Date of written order to commence the work			
Contract Agreement/work Order No		Date of commencement of work			
		Due date of completion as per agreement			
		Date of actual completion of the work			

I. ACCOUNT OF WORK EXECUTED

On Account payment for the work not previously measured **			Item No of the agreement/ work order	Description of work	Quantity as per agreement	Quantity executed up to date	Rate Rs. P	Unit	Payment on the basis of actual measurement up to date Rs P	Quantity since last running account bill	Payment on the basis of actual measurement since last running account bill Rs P	Remarks
Total as per last running account bill Rs.	Since last running account bill Rs	Total up to date Rs										
1	2	3	4	5	6	7	8	9	10	11	12	13

BHARAT HEAVY ELECTRICALS LIMITED,
POWER SECTOR - EASTERN REGION, KOLKATA
TENDER NO. PSER:SCT:RKL-C2004:20

1	2	3	4	5	6	7	8	9	10	11	12	13

Total Value of Work Done up to date (A)	
Deduct Value of work shown on the last running account bill (B)	
Net value of work done since last running account bill (C)	

Rupees (In Words).....Only

II MEMORANDUM OF PAYMENT

		Rs.	P
1	Total Value of work actually measured as per Account no I coloumn 10 (A)		
	Deduct amount of paym,ents already made as per last running account bill No ……. Dated…….		
2	Forwarded to the Accounts Office on ……. (B)		
3	Payments now to be made { (A) - (B)} (C)		
4	Deduct ammounts recoverable from the contractor on account of :	Rs	P
	a Material suplied by BHEL vide annexure A attached		
	b Hire of Tools & Plants vide Annexure B attached		
	c Other charges vide Annexure C attached		
	d Income Tax		
	Total deduction		
5	Balance		
6	Refund of 50% of security deposite on completion of work		
7	Net amount to be paid to the Contractor		

III. CERTIFICATE OF THE ENGINEER IN CHARGE

The measurement on which the entries in coulmns 7 to 12 of Part I of this bill (Account of work executed) are based were made by ……..

1 (Name and designation)

2 A statement showing the quantities of stores issued to the contractor (whether free or on recovery basis) and their disposal is attached.

Date:

Signature of Engineer in charge
Designation

IV CERTIFICATE OF THE SENIOR ENGINEER

1 Certified that I have personally inspected the work and that the work has been physically completed on the due date in accordance with the terms and
Cretified that the measurements have been check measured to the prescribed extent by …….
…… (Name & designation). And by the the undersigned at site and relevent entries have been initiated in the measurement book (vide
2 pages…… ….)
3 Certified that the methods of measurement are correct
4 Certified that the measurements have been technically checked with reference to contract drawings, deviations etc
5 Certified that all the measurements recorded in the measurement book have been correctly billed for at the contract rates or approved rates.
6 Certified that all the recoverable amounts in respect of stores, tools and pa\lant, e\water, electricity charges etc, have been correctly made vide Annexures A
7 Certified that the issues of all stores as per statement atytached (whether charged to the contractor or direct to the work) have been technically checked and

Certified for payment of * Rs ……. (Rupees…… (Only). To be paid in cash/by cheque in the presence of ……..

ALLOCATION

The expenditure as under and to be included in the accounts for ……..19

Ledger Head	Debit (Gross Amount) Rs. P	Credit (Deduction) Rs. P
……	……	……
Total	……	……

* Here specify the net amount payable

Signature of Senior Engineer
Date

V. ENTRIES TO BE MADE IN THE ACCOUNTS OFFICE

Account Bill no…… Dated …….
Entered in Journal book vide entry No……Dated……
Passed for……Rs……..
Less Deductions……..Rs……
(Rupees…….Only)
Payable to Shri/M/s…….... by cheque/cash
Entered in contractors' Ledger no..... Page

Assistant Accountant Accounts officer
Date: Date: Date:

ALLOCATION

Estimate No: Code No
Name of the Work ……

Ledger Head	Debit (Gross Amount) Rs P	Credit (Deduction) Rs
…….	.....	.....
Total	.....	.....

VI. Received Rs……..(Rupees……..Only) in full and final settlement of all moneys due under this contract and I / we have no further claims of this contract.

Signature of Witness
Address

Revenue Stamp
Signature of Contractor
Date:

VII . ENTRIES TO BE MADE BY TREASURY SECTION

Cash book entry no and date :

Amount Paid Rs……
Amount unpaid Rs……..
Total Rs……..

Signature of Cashier
Date:

ANNEXURE A

Part I

Statement showing details of material issued to the contractor Shri/M/s…….. In respect of Contract Agreement/Work Order No…….. Dated …….

Sl No	Stores Issue voucher No and date	Issue voucher No and date alloted by stores to the SIV	description of material issued to the contractor	Quantity issued	Quantity actually incorporated in the work	Whether recoverable from the contractor or supplied free	If recoverable from contractor						Remarks
							Rate at which recoverable		Amount Recoverable		Amount recoverable upto previous bill		Balance Now recovered		
							Rs	P	Rs	P	Rs	P	Rs	P	
1	2	3	4	5	6	7	8		9		10		11		12

Total ……

Signature of Contractor
Date

Signature of Engineer in charge
Date

Signature of Senior Engineer
Date

ANNEXURE A

Part II

Statement showing details of material issued to the contractor Shri/M/s…….. in respect of Contract Agreement/Work Order No…….. Dated ……and not covered by the agreement

Sl No	Stores Issue voucher No and date	Issue voucher No and date alloted by stores to the SIV	description of material issued to the contractor	Quantity issued	Quantity actually incorporated in the work	Issue Rate Rs P	Amount Recoverable Rs P	Amount recoverable upto previous bill Rs P	Balance Now recovered Rs P	Remarks
1	2	3	4	5	6	7	8	9	10	11

Total ……

Add Departmental Charges

Add Sales Tax (wherever applicable) ……..

Total ……..

Signature of Contractor
Date

Signature of Engineer in charge
Date

Signature of Senior Engineer
Date

ANNEXURE B

Statement showing TOOLS & PLANTS issued to the contractor Shri/M/s…….. in respect of Contract Agreement/Work Order No…….. Dated …….and not covered by the agreement

Sl No	Description of tools & plants issued	Period for which issued	Rate at which Recivery is to be made	Amount recoverable Rs P	Amount recoverable upto previous bill Rs P	Balance Now recovered Rs P	Remarks
1	2	3	4	5	6	7	8

Total ……

Signature of Contractor
Date

Signature of Engineer in charge
Date

Signature of Senior Engineer
Date

ANNEXURE C

showing detail of other recoveries to be made from the contractor Shri/M/s……
nent/Work Order No……Dated……

Sr.No	Particulars	Unit	Quantity	Rate Rs. P.	Amount recoverable Rs. P	Amount recovered upto previous bill Rs. P.	Amount now recovered Rs. P.	Remarks
1	2	3	4	5	6	7	8	9
1	Water Charges							
2	Electricity Charges							
3	Seignorage Charges							
4	Medical Charges							
5	Cost of empty gunny bags and empty containers not returned							
6								
7								
8								
9								
10								
	Total							

Signature of Contractor
Date

Signature of Engineer Incharge
Date

Signature of Sr. Engineer
Date

Form WAM 7 (Contd.)

ANNEXURE D

DEVIATION STATEMENT

Name of the Contractor :
Name of the Work :

Contract Agreement/Work Order No. :
Date :

Sl. No.	Description of item	Unit	Quantity as per agreement	Quantity as executed	Rate as per agreement Rs. P.	Rate as executed Rs. P.	Amount as per agreement Rs. P.	Amount as executed Rs. P.	Difference		Reason for the deviation with authority, if any
									Excess Rs. P.	Savings Rs. P.	
1	2	3	4	5	6	7	8	9	10	11	12

Signature of Engineer in Charge
Date :

Signature of Senior Engineer
Date :

Form WAM 7 (Contd.)

ANNEXURE E

Statement showing the consumption of materials issued to the contractor Shri/M/s.....
in respect of Contract Agreement/Work Order No..... Dated.....

Name of the Work :

ON RECOVERY BASIS

Sl. No.	Description of material	Unit	Quantity actually issued	Quantity actually incorporated in the work	Balance	Particulars of disposal of balance	Quantity to be issued as per approved data for work actually done	Variation in consumption (Difference between column 5 and 8)		Rate chargeable for excess/ short consumption, if any	Amount recoverable for excess/ short consumption, including materials not returned	REMARKS
								More	Less	Rs. P.	Rs. P.	
1	2	3	4	5	6	7	8	9	10	11	12	13
1.	Cement											
2.	Bricks											
3.	Wood.....											
4.	Asbestos Sheet											
5.	Iron Materials											
6.												
7.												
8.												
9.												
10.												

Signature of Contractor
Date :

Signature of Engineer in Charge
Date :

Signature of Senior Engineer
Date :

Note : 1. The quantities shown in columns 4 and 5 above should tally with those shown in columns 5 and 6 respectively of Annexure A (Part I and II).

2. Data statement of theoretical consumption should be attached in support of quantity specified in column 8.

ANNEXURE F

Statement showing detail of materials issued to the contractor Shri/M/s……
ct of Contract Agreement/Work Order No……Dated……

Name of work; **FREE OF COST**

Sr.No	Stores issue voucher No.	ription of ma	Unit	Quantity issued	Quantity requried as per data	Quantity consumed in the work	Balance(If any)	Nature of disposal for the balance	Rate chargeable for material not returned Rs.P.	Amount recoverable for material not returned Rs. P	Remarks
1	2	3	4	5	6	7	8	9	10	11	12
		Total									

Signature of Contractor
Date

Signature of Engineer Incharge
Date

Signature of Sr. Engineer
Date

Note:Data statement of therotical consumption should be attached in support of the quantity specified in coloumn 6

ANNEXURE G

QUESTIONNAIRE TO BE ANSWERED BY ENGINEER IN CHARGE AND SENIOR ENGINEER	
(Correct particulers and answers to be recorded)	
Name of the work :	
Name of the Contractor :	
Date of commencement of the work:	
Contract agreement/work ordered no. and date:	
Reference to supplementary agreement no,if any :	
Whether adminstrative approval and techanical sanction has been accorded by the cmpetent authority ? If so ,citc reference	
Whether sanction of the competent authority and financial concurrencr of the Accounts Departnment for award of the work has been accorded ? If so,cite reference.	
Wheter the work has been completed in time ? If not ,wheter penalty has been levied or sanction of the competent authority for extension of time granted and communicated to the Accounts Department with reasons for grant of extension? (Due and actual date of completion of the work and reference to letter no. and date granting the extension of time should be given)	
(a) Wheter the rates allowed in the bill have been checked with the contract agreement ? (b) Wheter the rates for extra/supplemental items have been approved by the competent authority and the sanction communicated to the accounts Department together wiht rate analysis? If so,cite reference.	
Wheter deviations have been approved by the competent authority? If yes, give reference to the approval; if not, give reasons.	
Whether the rates of recovery of stores issued to the contractor which are not provided for in the Contract Agreement have been settled in counsultation with Finance?	
Whether discrepancies pointed out by the Accounts Department in the store statement have been reconciled and accepted by the Accounts Department?	

ANNEXURE G

QUESTIONNAIRE TO BE ANSWERED BY ENGINEER IN CHARGE AND SENIOR ENGINEER	
(Correct particulers and answers to be recorded)	
Whether materials issued to the contractor in excess of the theoretical requirements have been returned to the Stores Department and the no. and date of such retuened stores vouchers have been shown in stores statement? If not ,whether the cost of such excess material has been recovered at the prescribed rate? Whethre consumption statements in respect of materials chargeabale to the work have been attached to the bill?	
Whether consumption of materials shown has been technicaly checked by Senior Engineer?	
Whether materials isshued and used in the work is not less then that required for consumption in work accroding to our specification? If comsumption is less, whether necessary recovery has been made in the bill?	
Whether mesurments have been checked by the Engineer and Sr. Engineer to the extent required and certificates of check recorded in the mesurments books?	
Whether contractor has signed the bill and the mesurments books without reservations? If not; whether resones have been intimated to the Accounts Department?	
Whethet arithmatical calculations have been checked and certificate recorded in the mesurment books by a person other than the one who calculated initially	
Whether any work was done at the risk and cost of the contractor and whether such cost has been recovered from him? Give particulers.	
Whether all advance payments on running Accounts have been recovered?	
Whether tall the recovries due to services given to the contractor like rent of accommodation, water charges, electricity charges etc. have been recovered and wheather payments made by the company on behalf of the contractor have been adjusted?	
Whether the files containing abstracts from mesurments books/ standared mesurment books have been completed/ updated?	
Whether hire charges of tools and plant have been recovered and the statement of hire charges with full details attached?	

ANNEXURE G

QUESTIONNAIRE TO BE ANSWERED BY ENGINEER IN CHARGE AND SENIOR ENGINEER	
(Correct particulers and answers to be recorded)	
Whether the certificate of workmanship and completion of work according to specifications, drawings etc. is recorded by Engineer/ Sr. Engineer and whether recoveries have been made for defective works, if any?	
Whether all corrections in the bill/measurement books etc. have been neatly made and attasted and there are no overwriting?	
Whether final measurments have been taken as soon as possibal after completion of work and the cretificate of complition issued? If not, whether resons for delay have been recorded and communicated to Accounts?	
In respect of Quintites reduced in the final bill as compare to the running payment, whether adequate reasons have been recorded and communicated to Accounts	
Whether the Expeinditure has been classified correctly according to heads of Account recorded in the sanctioned estimate?	
Whether the work has been completed within the estimated cost? If not, what is the percentage of excess over thw sanctioned estimate/ addministrative approval? In case the excess is beyond the competency of Sr. Engineer, what action has been taken for the obtaining the approval of the authority complent to sanction the excess?	
(a) If the contractor has furnished bank guarantee in lieu of cash sequrity deposit towards proper exicuation of works and guarantee against defectsduring the maintenance period, whether the period of currency of the bank guarantee cover the entire maintenance period? (b) If not, whether sequrity deposite has been proposed to be recovred from the final bill?	
Whether all the previous audit objections raised on running Account bills have been settled? If so, cite refrence.	
Signature of Engineer in Charge	Signature of Engineer in Charge
Date:	Date:

Form No: F-14 (Rev 01)

PS-	MONTHLY PLAN & REVIEW WITH CONTRACTOR	Page **1** of **6**

Name of Project		Contract No.	
Name of Work		Name of Contractor	

PART- A: PLAN/ REVIEW OF WORK FOR THE MONTH OF ……..…….. Date of Plan/ Review……

SN.	Description of Work	Unit of Measur-ement	Unit Rate	Planned (QTY Planned for the month as per Part –C of last month)		Cumulative Shortfall attributable to contractor upto last month (Refer Note 1)		Achieved		Shortfall attributable to BHEL w.r.t Plan (as per Col. 3 of Part-D)		Cumulative Shortfall attributable to Contractor upto & including this month		REMARKS (Reasons for Shortfall attributable to Contractor. Supporting documents to be kept as record.)
(a)	(b)	(c)	(d)	A		B		C		D		E=A+B-C-D		
				Phy.	Financial	Phy	Financial	Phy.	Financial	Phy.	Financial	Phy.	Financial	
	Value of Other Items not mentioned above but planned to be executed in this month													
Total					ΣA		ΣB		ΣC		ΣD		ΣE	

BHEL
(Sign with name, designation and date)

CONTRACTOR
(Sign with name, designation and date)

PS-	MONTHLY PLAN & REVIEW WITH CONTRACTOR	Page **2** of **6**

Name of Project		Contract No.	
Name of Work		Name of Contractor	

PART- A: Contd…….

Note 1: **In addition to the work planned as per Col. 'A', Contractor shall also make full efforts to minimize the 'Cumulative shortfall attributable to contractor upto the month' as mentioned in Col. 'B' by enhancing its resources, so as to achieve the completion of activities as per agreed schedule. In case contractor is not able to execute the entire shortfall, then BHEL 'Engineer in-charge', shall decide the priority of work to be executed and it shall be binding on the contractor.**

Note 2: Percentage Shortfall attributable to contractor w.r.t. **"**Plan - Shortfall attributable to BHEL**"** for the month = [(ΣE-ΣB)/(ΣA-ΣD)]x100
In case, (ΣE-ΣB) is negative, then it shall be treated as zero percent."

Note 3: Form 14 should include all items being planned in the current month, and all items against which shortfall was attributable to contractor till previous month. However, for practical reason, if it is not possible to mention some of the items in Form-14 being planned to be executed in this month, then also value of such items shall necessarily be included in calculation of Total Value.

Note 4: In case reason for shortfall attributable to contractor is w.r.t. T&P and Manpower, it should be in conformity with Part B1 and B2.

BHEL
(Sign with name, designation and date)

CONTRACTOR
(Sign with name, designation and date)

Form No: F-14 (Rev 01)

PS-	MONTHLY PLAN & REVIEW WITH CONTRACTOR	Page **3** of **6**

Name of Project		Contract No.	
Name of Work		Name of Contractor	

PART – B-1: PLAN/REVIEW OF DEPLOYMENT OF MAJOR T&Ps FOR THE MONTH OF ……..…….. Date of Plan/ Review……

CONTRACTOR'S SCOPE: -

SN.	PLAN				DEPLOYMENT STATUS			
	Major T&P to be deployed as per work planned for the month	QTY	Deployment Period (in days)	Weightage assigned to planned T&P (in fraction such that ΣC =1)	Actual Deployed Quantity	Actual Deployment Period (in days)	Weighted T&P Deployed	REMARKS (Works affected due to non-deployment of T&Ps)
		A	B	C	D	E	F=(C x D x E) / (A x B)	

Note: In case, E>B, it shall be considered as E=B. Similarly, in case D>A, it shall be considered as D=A.
Percentage of T&P Deployed = ΣF x 100

BHEL SCOPE: -

SN.	PLAN			DEPLOYMENT STATUS		
	Major T&P to be deployed as per work planned for the month	QTY	Deployment Period (in days)	Actual Deployed Quantity	Actual Deployment Period (in days)	REMARKS (Works affected due to non-deployment of T&Ps)

BHEL
(Sign with name, designation and date)

CONTRACTOR
(Sign with name, designation and date)

Form No: F-14 (Rev 01)

PS-	MONTHLY PLAN & REVIEW WITH CONTRACTOR	Page **4** of **6**

Name of Project		Contract No.	
Name of Work		Name of Contractor	

PART – B-2: PLAN/ REVIEW OF DEPLOYMENT OF MANPOWER FOR THE MONTH OF ……..…….. Date of Plan/ Review……

CONTRACTOR'S SCOPE: -

SN.	Area of Work	Category of Labour	No. of Labour required as per category	Deployment Period (in days)	No. of Labour actually deployed	Actual Deployment Period (in days)	REMARKS **(**Works affected due to non-availability of labour)
			A	B	C	D	

Percentage of Manpower Deployed=100 x Σ(CxD)/Σ(AxB)

BHEL
(Sign with name, designation and date)

CONTRACTOR
(Sign with name, designation and date)

Form No: F-14 (Rev 01)

PS-	MONTHLY PLAN & REVIEW WITH CONTRACTOR	Page **5** of **6**

Name of Project		Contract No.	
Name of Work		Name of Contractor	

PART – C: PLAN(PHYSICAL) FOR THE NEXT MONTH i.e. ……..…….. Date of Plan ……

SN.	Description of work	Original Planned Quantity	Planned Quantity (excluding shortfalls attributable to contractor till date)	Unit of Measu-rement	T&Ps Required				Manpower Required		REMARKS (Reasons for difference in Original Planned Quantity w.r.t. Planned quantity to be given)
					Contractor Scope		BHEL Scope		Category of Labour	No. of Labour required as per Category	
					Major T&P to be deployed as per work planned for the month	Quantity	Major T&P to be deployed as per work planned for the month	Quantity			

Note 1: Planned quantity should be based on available/ expected fronts/ inputs in the next month

Note 2: "Original Planned Quantity" shall be as per latest jointly agreed programme between BHEL and Contractor before commencement of work or at the time of latest Time Extension, as the case may be.

BHEL
(Sign with name, designation and date)

CONTRACTOR
(Sign with name, designation and date)

Form No: F-14 (Rev 01)

PS-	MONTHLY PLAN & REVIEW WITH CONTRACTOR	Page **6** of **6**

Name of Project		Contract No.	
Name of Work		Name of Contractor	

PART – D: REASONS FOR SHORTFALL ATTRIBUTABLE TO BHEL IN RESPECT OF PLAN FOR THE MONTH……

SN.	Description of Work (from Part-A)	Quantities Affected		Reasons for Shortfall attributable to BHEL	Agency responsible for reasons for Shortfall	Remarks (Supporting Documents in respect of agency responsible)
		(Physical Quantity)	Unit of Measu-rement			
1	2	3	4	5	6	7

Note1: Reasons for shortfall shall include non-availability of fronts/ drawings/ materials/ T&P (BHEL Scope)/ clearances etc. and other hindrances for which contractor is not responsible.

Note2: Agency responsible may be BHEL Site/ MUs/ Design Centre/ BHEL Customer/ other Contractors etc.

BHEL
(Sign with name, designation and date)

BANK GUARANTEE FOR PERFORMANCE SECURITY

Bank Guarantee No:

Date:

To

NAME

& ADDRESSES OF THE BENEFICIARY

Dear Sirs,

In consideration of the Bharat Heavy Electricals Limited (hereinafter referred to as the 'Employer' which expression shall unless repugnant to the context or meaning thereof, include its successors and permitted assigns) incorporated under the Companies Act, 1956 and having its registered office at BHEL House, Siri Fort, Asiad, New Delhi – 110049 through its Unit at Bharat Heavy Electricals Limited, Power Sector Eastern Region, BHEL Bhawan, Plot No 9/1, DJ Block, Sector-II, Salt lake City, Kolkata – 700091 having awarded to (Name of the Vendor / Contractor / Supplier) having its registered office at_____[1] hereinafter referred to as the 'Contractor/Supplier', which expression shall unless repugnant to the context or meaning thereof, include its successors and permitted assigns), a contract Ref No……dated ……[2] valued at Rs……[2] (Rupees ----------)for <Nature of Work>[3] (hereinafter called the 'Contract') and the Contractor having agreed to provide a Contract Performance Guarantee, equivalent to ……% (…. Percent) of the said value of the Contract to the Employer for the faithful performance of the Contract,

we, ……, (hereinafter referred to as the Bank), having registered/Head office at …….. and inter alia a branch at …… being the Guarantor under this Guarantee, hereby, irrevocably and unconditionally undertake to forthwith and immediately pay to the Employer a maximum amount Rs ---------- (Rupees ----------)[4] without any demur, immediately on a demand from the Employer, .

Any such demand made on the Bank shall be conclusive as regards the amount due and payable by the Bank under this guarantee. However, our liability under this guarantee shall be restricted to an amount not exceeding Rs. _____ _____.

We undertake to pay to the Employer any money so demanded notwithstanding any dispute or disputes raised by the Contractor/ Supplier in any suit or proceeding pending before any Court or Tribunal relating thereto our liability under this present being absolute and unequivocal.

The payment so made by us under this Guarantee shall be a valid discharge of our liability for payment thereunder and the contractors/supplier shall have no claim against us for making such payment.

We the ……bank further agree that the guarantee herein contained shall remain in full force and effect during the period that would be taken for the performance of the said Contract and that it shall continue to be enforceable till all the dues of the Employer under or by virtue of the said Contract have been fully paid and its claims satisfied or discharged.

We …….. BANK further agree with the Employer that the Employer shall have the fullest liberty without our consent and without affecting in any manner our obligations hereunder to vary any of the terms and conditions of the said Contract or to extend time of performance by the said Contractor/Supplier from time to time or to postpone for any time or from time to time any of the powers exercisable by the Employer against the said Contractor/Supplier and to forbear or enforce any of the terms and conditions relating to the said Agreement and we shall not be relieved from our liability by reason of any such variation, or extension being granted to the said Contractor/Supplier or for any forbearance, act or omission on the part of the Employer or any indulgence by the Employer to the said Contractor/Supplier or by any such matter or thing whatsoever which under the law relating to sureties would but for this provision have effect of so relieving us.

The Bank also agrees that the Employer at its option shall be entitled to enforce this Guarantee against the Bank as a principal debtor, in the first instance without proceeding against the Contractor and notwithstanding any security or other guarantee that the Employer may have in relation to the Contractor's liabilities.

This Guarantee shall remain in force upto and including…….. [5] and shall be extended from time to time for such period as may be desired by Employer.
This Guarantee shall not be determined or affected by liquidation or winding up, dissolution or change of constitution or insolvency of the Contractor/Supplier but shall in all respects and for all purposes be binding and operative until payment of all money payable to the Employer in terms thereof.

Unless a demand or claim under this guarantee is made on us in writing on or before the ……[6] (3 months more than the present date of validity of Bank Guarantee) we shall be discharged from all liabilities under this guarantee thereafter.

We, …… BANK lastly undertake not to revoke this guarantee during its currency except with the previous consent of the Employer in writing.
Notwithstanding anything to the contrary contained hereinabove:

a) The liability of the Bank under this Guarantee shall not exceed…… [7]

b) This Guarantee shall be valid up to ……[8]

c) Unless the Bank is served a written claim or demand on or before _____[9] (3 months more than the present date of validity of Bank Guarantee) all rights under this guarantee shall be forfeited and the Bank shall be relieved and discharged from all liabilities under this guarantee irrespective of whether or not the original bank guarantee is returned to the Bank.

We, _____ Bank, have power to issue this Guarantee under law and the undersigned as a duly authorized person has full powers to sign this Guarantee on behalf of the Bank.

Any claim or dispute arising under the terms of this document shall only be enforced or settled in the courts of at Kolkata only.

For and on behalf of
(Name of the Bank)

Dated…….

Place of Issue…….

[1] NAME AND ADDRESS OF THE VENDOR /CONTRACTOR / SUPPLIER.

[2] DETAILS ABOUT THE NOTICE OF AWARD/CONTRACT REFERENCE

[3] PROJECT/SUPPLY DETAILS

[4] BG AMOUNT IN FIGURES AND WORDS

[5] VALIDITY DATE

[6] DATE OF EXPIRY OF CLAIM PERIOD

[7] BG AMOUNT IN FIGURES AND WORDS.

[8] VALIDITY DATE

[9] DATE OF EXPIRY OF CLAIM PERIOD

Note:

1. **Units are advised that expiry of claim period may be kept 2/3 months after validity date.**

2. **In Case of Bank Guarantees submitted by Foreign Vendors-**

   a. **From Nationalized/Public Sector / Private Sector/ Foreign Banks (BG issued by Branches in India)** can be accepted subject to the condition that the Bank Guarantee should be enforceable in the town/city or at nearest branch where the Unit is located i.e. Demand can be presented at the Branch located in the town/city or at nearest branch where the Unit is located.

b. From Foreign Banks (wherein Foreign Vendors intend to provide BG from local branch of the Vendor country's Bank)

b.1 In such cases, in the Tender Enquiry/ Contract itself, it may be clearly specified that Bank Guarantee issued by **any of the Consortium Banks only** will be accepted by BHEL. As such, Foreign Vendor needs to make necessary arrangements for issuance of Counter- Guarantee by Foreign Bank in favour of the Indian Bank (BHEL's Consortium Bank). It is advisable that all charges for issuance of Bank Guarantee/ counter- Guarantee should be borne by the Foreign Vendor. The tender stipulation should clearly specify these requirements.

b.2 **In case, Foreign Vendors intend to provide BG from** Overseas Branch of our Consortium Bank (e.g. if a BG is to be issued by SBI Frankfurt), the same is acceptable. However, the procedure at **sl.no. b.1** will required to be followed.

b.3 The BG issued may preferably be subject to Uniform Rules for Demand Guarantees (URDG) 758 (as amended from time to time). In case, of Foreign Vendors, the BG Format provided to them should clearly specify the same.

b.4 The BG should clearly specify that the demand or other document can be presented in electronic form.

BANK GUARANTEE FOR SECURITY DEPOSIT CUM PERFORMANCE BANK GUARANTEE BOND

B.G. NO. Date

This deed of Guarantee made this ---------- day of ----------two thousand ----- by <Name and Address of Bank> hereinafter called the "The Guarantor" (which expression shall unless repugnant to the context or meaning thereof be deemed to include its successors and assigns) in favour of M/s Bharat Heavy Electrical Limited (A Govt. of India Undertaking) a company incorporated under the Companies Act, 1956, having its registered office at BHEL House, Siri Fort, Asiad, New Delhi – 110049 through its unit at <**Address of Power Sector Region**[1]> hereinafter called "The Company" (which expression shall unless repugnant to the context or meaning thereof be deemed to include its successors and assigns)

WHEREAS < Contractor's Name and Address> (hereinafter referred to as the Contractor) have entered into a contract arising out of Letter of Intent no. < LOI REF & Date > (hereinafter referred to as "the contract") for < Name of Work > with the company.

AND WHEREAS the contract inter-alia provides that the contractor shall furnish to the company a sum of Rs.---------- (Rupees----------) towards security deposit for due and faithful performance of the contract in the form and manner specified therein.

AND WHEREAS the contractor has approached the Guarantor and in consideration of the arrangement arrived at between the contractor and the Guarantor, the Guarantor has agreed to give the Guarantee as hereinafter mentioned in favour of the company.

The Guarantor do hereby guarantee to the company the due and faithful performance, observance or discharge of the Contract by the contractor and further unconditionally and irrevocably undertake to pay to the Company without demur and merely on a demand, to the extent of Rs.----------(Rupees----------) against any claim by the company on them for any loss, damage, costs, charges and expenses caused to or suffered by the company by reasons of the contractor making any default in the performance, observance or discharge of the terms, conditions, stipulations or undertakings or any of them as contained in the contract.

The decision of the company whether any default has occurred or has been committed by the contractor in the performance, observance or discharge of any of the terms, conditions, stipulations or undertakings or any one of them as contained in the contract and / or as to the extent of loss, damage, costs, charges and expenses caused to or suffered by the company by reason of the contractor making any default in the performance, observance or discharge of any of the terms, conditions, stipulations or undertakings or any one of them shall be conclusive and binding on the Guarantor irrespective of the fact whether the contractor admits or denies the default or questions the correctness of any demand made by the company in any Court, Tribunal or Arbitration proceedings or before any other Authority.

The company shall have the fullest liberty without affecting in any way the liability of the Guarantor under this Guarantee, from time to time to vary any of the terms and conditions of the contract or extend time of performance by the contractor or to postpone for any time and from time to time any of the powers exercisable by it against the contractor and either enforce or forebear from enforcing any of the terms and conditions governing the contract or securities available to the company and the Guarantor shall not be released from its liability under these presents by any exercise by the company of the liberty with reference to the matters aforesaid or by reasons of time being given to the contractor or any other forbearance, act or commission on the part of the company or any indulgence by the company to the contractor or any other matter or thing whatsoever which under the law relating to sureties would, but for this provision have the effect of so releasing the Guarantor from its liability under this guarantee.

The Guarantor further agrees that the Guarantee herein contained shall remain in full force and effect during the period that would be taken for the performance of the contract and its claim satisfied or discharged and till the company certifies that the terms and conditions of the contract have been fully and properly carried out by the contractor and accordingly discharges this Guarantee, subject however, that the company shall have no claim under this Guarantee after ---------- i.e. (3 months more than the present date of validity of Bank Guarantee unless the date of validity of this Bank Guarantee is further extended from time to time, as the case may be) unless a notice of the claim under this Guarantee has been served on the Guarantor before the expiry of the said period in which case the same shall be enforceable against the Guarantor not withstanding the fact that the same is enforced after the expiry of the said period.

BANK GUARANTEE FOR SECURITY DEPOSIT CUM PERFORMANCE BANK GUARANTEE BOND

The Guarantor undertakes not to revoke this Guarantee during the period it is in force except with the previous consent of the Company in writing and agrees that any liquidation or winding up or insolvency or dissolution or any change in the constitution of the contractor or the Guarantor shall not discharge the Guarantor's liability hereunder.

It shall not be necessary for the company to proceed against the contractor before proceeding against the Guarantor and the Guarantee herein contained shall be enforceable against them notwithstanding any security which the Company may have obtained or obtain from the Contractor shall at the time when proceedings are taken against the Guarantor hereunder be outstanding or unrealized.

Notwithstanding anything contained herein before, our liability under the Guarantee is restricted to Rs.---------- (Rupees----------). Our guarantee shall remain inforce until ----------, i.e. (the present date of validity of Bank Guarantee unless the date of validity of this Bank Guarantee is further extended from time to time) unless a claim or demand under this guarantee is made against us on or before ---------- (3 Months more than the validity date) we shall be discharged from our liabilities under this Guarantee thereafter.

Any claim or dispute arising under the terms of this documents shall only be enforced or settled in the courts of at < **Name of place[2]** > only.

The Guarantor hereby declares that it has power to execute this guarantee and the executant has full powers to do so on behalf of the Guarantor.

IN WITNESS whereof the ---------- (Bank) has hereunto set and subscribed its hand the day, month and year first, above written.

(Name of the Bank)

Signed for and on behalf of the Bank
(Designation of the Authorized Person Signing the Guarantee)

(Signatory No.----------)

DATED:

SEAL

==========

Notes :

1. **Address of Power Sector Regions (inviting the Tender)** is as below:
   - PSNR : Bharat Heavy Electricals Limited, Power Sector Northern Region, HRDI & PSNR Complex, Plot No 25, Sector 16-A, Noida – 201 301 (Uttar Pradesh)
   - PSER : Bharat Heavy Electricals Limited, Power Sector Eastern Region, BHEL Bhawan, Plot No 9/1, DJ Block, Sector-II, Salt lake City, Kolkata – 700 091
   - PSWR: Bharat Heavy Electricals Limited, Power Sector Western Region, Shree Mohini Complex, 345 Kingsway, Nagpur 440 001
   - PSSR: Bharat Heavy Electricals Limited, Power Sector Southern Region, 690, Anna Salai, Nandanam, Chennai 600 035

2. **Name of place (for jurisdiction of Courts)** is as below:
   - PSNR : Delhi
   - PSER : Kolkata
   - PSWR: Nagpur
   - PSSR : Chennai

3. The BG shall be executed on non-judicial stamp papers of adequate value procured in the name of the Bank in the State where the Bank is located.

4. The BG is required to be sent by the executing Bank directly to BHEL at the address where tender is submitted / accepted under sealed cover.

BANK GUARANTEE FOR RELEASE OF AMOUNTS WITHHED/LIQUIDATED DAMAGES AMOUNT

Bank Guarantee No:

Date:

To

NAME

& ADDRESSES OF THE BENEFICIARY

Dear Sirs,

In consideration of the Bharat Heavy Electricals Limited [1](hereinafter referred to as the 'Employer' which expression shall unless repugnant to the context or meaning thereof, include its successors and permitted assigns) incorporated under the Companies Act, 1956 and having its registered office at BHEL House, Siri Fort, Asiad, New Delhi – 110049 through its Unit at Bharat Heavy Electricals Limited, Power Sector Eastern Region, BHEL Bhawan, Plot No 9/1, DJ Block, Sector-II, Salt lake City, Kolkata – 700091 having awarded to (Name of the Vendor / Contractor / Supplier) incorporated under the ……..having its registered office at_____ [1](hereinafter referred to as the 'Contractor', which expression shall unless repugnant to the context or meaning thereof, include its successors and permitted assigns), a contract Ref No……dated ……..[2]valued at Rs……(Rupees ----------) for <Nature of Work>[3](hereinafter called the 'Contract')

The Contractor as per Contract should have completed the work/ supplies under the contract by……..(date). As per terms and conditions of the Contract, the Employer is entitled to levy Liquidated Damages (LD) for delays and the Employer has withheld an amount of Rs ……..by way of LD as per the Contract. Now, on the request of the Contractor, the Employer having agreed to release the amount of Rs……..withheld from the Contractor's invoices as Liquidated damages under the terms and conditions of the Contract on production of a Bank Guarantee for Rs._____ (Rupees……only) [4]

We, ……, (hereinafter referred to as the Bank), having registered/Head office at …….. and inter alia a branch at ……. being the Guarantor under this Guarantee, hereby irrevocably and unconditionally undertake to forthwith and immediately pay to the Employer a maximum amount of Rs ---------- (Rupees ----------) without any demur, merely on a demand from the Employer

Any such demand made on the Bank shall be conclusive as regards the amount due and payable by the Bank under this guarantee. However, our liability under this guarantee shall be restricted to an amount not exceeding Rs. _____

We undertake to pay to the Employer any money so demanded notwithstanding any dispute or disputes raised by the Contractor/ Supplier in any suit or proceeding pending before any Court or Tribunal relating thereto our liability under this present being absolute and unequivocal.

The payment so made by us under this Guarantee shall be a valid discharge of our liability for payment thereunder and the contractors/supplier shall have no claim against us for making such payment.

We the ……bank further agree that the guarantee herein contained shall remain in full force and effect during the period that would be taken for the performance of the said Contract and that it shall continue to be enforceable till all the dues of the Employer under or by virtue of the said Contract have been fully paid and its claims satisfied or discharged.

We …….. BANK further agree with the Employer that the Employer shall have the fullest liberty without our consent and without affecting in any manner our obligations hereunder to vary any of the terms and conditions of the said Contract or to extend time of performance by the said Contractor/Supplier from time to time or to postpone for any time or from time to time any of the powers exercisable by the Employer against the said Contractor/Supplier and to forbear or enforce any of the terms and conditions relating to the said Agreement and we shall not be relieved from our liability by reason of any such variation, or extension being granted to the said Contractor/Supplier or for any forbearance, act or omission on the part of the Employer or any indulgence by the Employer to the said Contractor/Supplier or by any such matter or thing whatsoever which under the law relating to sureties would but for this provision have effect of so relieving us.
The Bank also agrees that the Employer at its option shall be entitled to enforce this Guarantee against the Bank as a principal debtor, in the first instance without proceeding against the Contractor and notwithstanding any security or other guarantee that the Employer may have in relation to the Contractor's/ Supplier's liabilities.

This Guarantee shall remain in force upto and including…….. [5] and shall be extended from time to time for such period as may be desired by Employer.
This Guarantee shall not be determined or affected by liquidation or winding up, dissolution or change of constitution or insolvency of the Contractor/Supplier but shall in all respects and for all purposes be binding and operative until payment of all money payable to the Employer in terms thereof.

Unless a demand or claim under this guarantee is made on us in writingon or before the ……[6] (3 months more than the present date of validity of Bank Guarantee) we shall be discharged from all liabilities under this guarantee thereafter.

We, …… BANK lastly undertake not to revoke this guarantee during its currency except with the previous consent of the Employer in writing.

Notwithstanding anything to the contrary contained hereinabove:

a) The liability of the Bank under this Guarantee shall not exceed…… [7]
b) This Guarantee shall be valid up to ……[8]
c) Unless the Bank is served a written claim or demand on or before _____[9] (3 months more than the present date of validity of Bank Guarantee) all rights under this guarantee shall be forfeited and the Bank shall be relieved and discharged from all liabilities under this guarantee irrespective of whether or not the original bank guarantee is returned to the Bank.

We, _____ Bank, have power to issue this Guarantee under law and the undersigned as a duly authorized person has full powers to sign this Guarantee on behalf of the Bank.

Any claim or dispute arising under the terms of this document shall only be enforced or settled in the courts of at Kolkata only.

For and on behalf of
(Name of the Bank)

Dated…….

Place of Issue…….

[1] *NAME AND ADDRESS OF THE VENDOR /CONTRACTOR / SUPPLIER.*

[2] *DETAILS ABOUT THE NOTICE OF AWARD/CONTRACT REFERENCE*

[3] *PROJECT/SUPPLY DETAILS*

[4] *BG AMOUNT IN FIGURES AND WORDS*

[5] *VALIDITY DATE*

[6] *DATE OF EXPIRY OF CLAIM PERIOD*

[7] *BG AMOUNT IN FIGURES AND WORDS.*

[8] *VALIDITY DATE*

[9] *DATE OF EXPIRY OF CLAIM PERIOD*

Note:

1. **Units are advised that expiry of claim period may be kept 2/3 months after validity date.**

2. **In Case of Bank Guarantees submitted by Foreign Vendors-**

   a. **From Nationalized/Public Sector / Private Sector/ Foreign Banks (BG issued by Branches in India)** can be accepted subject to the condition that the Bank Guarantee should be enforceable in the town/city or at nearest branch where the Unit is located i.e. Demand can be presented at the Branch located in the town/city or at nearest branch where the Unit is located.

   b. **From Foreign Banks (wherein Foreign Vendors intend to provide BG from local branch of the Vendor country's Bank)**

   b.1 In such cases, in the Tender Enquiry/ Contract itself, it may be clearly specified that Bank Guarantee issued by **any of the Consortium Banks only** will be accepted by BHEL. As such, Foreign Vendor needs to make necessary arrangements for issuance of Counter- Guarantee by Foreign Bank in favour of the Indian Bank (BHEL's Consortium Bank). It is advisable that all charges for issuance of Bank Guarantee/ counter- Guarantee should be borne by the Foreign Vendor. The tender stipulation should clearly specify these requirements.

   b.2 **In case, Foreign Vendors intend to provide BG from** Overseas Branch of our Consortium Bank (e.g. if a BG is to be issued by SBI Frankfurt), the same is acceptable. However, the procedure at **sl.no. b.1** will required to be followed.

   b.3 The BG issued may preferably be subject to Uniform Rules for Demand Guarantees (URDG) 758 (as amended from time to time). In case, of Foreign Vendors, the BG Format provided to them should clearly specify the same.

   b.4 The BG should clearly specify that the demand or other document can be presented in electronic form.

BANK GUARANTEE FOR SUPPLY FREE ISSUE MATERIAL.

Bank Guarantee No:

Date:

To

NAME

& ADDRESSES OF THE BENEFICIARY

Dear Sirs,

In consideration of the Bharat Heavy Electricals Limited (hereinafter referred to as the 'Employer' which expression shall unless repugnant to the context or meaning thereof, include its successors and permitted assigns) incorporated under the Companies Act, 1956 and having its registered office at BHEL House, Siri Fort, Asiad, New Delhi – 110049 through its Unit at Bharat Heavy Electricals Limited, Power Sector Eastern Region, BHEL Bhawan, Plot No 9/1, DJ Block, Sector-II, Salt lake City, Kolkata – 700091 having awarded to (Name of the Vendor / Contractor / Supplier).having its registered office at_____ [1] (hereinafter referred to as the 'Contractor/Supplier/Fabricator' which expression shall unless repugnant to the context or meaning thereof, include its successors and permitted assigns), a contract Ref. No.……dated ……[2] valued at Rs.……(Rupees ----------) for <Nature of Work>[3] (hereinafter called the 'Contract')

and, the Employer having agreed as per the terms and conditions of the Contract to supply free issue material costing Rs._____ for the manufacture/fabrication of the equipment at the Contractor's site on on furnishing a Bank Guarantee for Rs._____ (Rupees……..)[4] in the manner hereinafter specified for the due safeguard of the free issue material,

we, ……, (hereinafter referred to as the Bank), having registered/Head office at …… and inter alia a branch at …… being the Guarantor under this Guarantee, hereby irrevocably and unconditionally undertake to forthwith and immediately pay to the Employer a maximum amount of Rs ---------- (Rupees ----------) without any demur, merely on a demand from the Employer, .

Any such demand made on the Bank shall be conclusive as regards the amount due and payable by the Bank under this guarantee. However, our liability under this guarantee shall be restricted to an amount not exceeding Rs. _____

We undertake to pay to the Employer any money so demanded notwithstanding any dispute or disputes raised by the Contractor/ Supplier in any suit or proceeding pending before any Court or Tribunal relating thereto our liability under this present being absolute and unequivocal.

The payment so made by us under this Guarantee shall be a valid discharge of our liability for payment hereunder and the Contractors/Supplier shall have no claim against us for making such payment.

We the ……Bank further agree that the guarantee herein contained shall remain in full force and effect during the period that would be taken for the performance of the said Contract and that it shall continue to be enforceable till all the dues of the Employer under or by virtue of the said Contract have been fully paid and its claims satisfied or discharged.

We …….. Bank further agree that the Employer shall have the fullest liberty without our consent and without affecting in any manner our obligations hereunder to vary any of the terms and conditions of the said Contract or to extend time of performance by the said Contractor/Supplier from time to time or to postpone for any time or from time to time any of the powers exercisable by the Employer against the said Contractor/Supplier and to forbear or enforce any of the terms and conditions relating to the said Agreement and we shall not be relieved from our liability by reason of any such variation, or extension being granted to the said Contractor/Supplier or for any forbearance, act or omission on the part of the Employer or any indulgence by the Employer to the said Contractor/Supplier or by any such matter or thing whatsoever which under the law relating to sureties would but for this provision have effect of so relieving us.

The Bank also agrees that the Employer at its option shall be entitled to enforce this Guarantee against the Bank as a principal debtor, in the first instance without proceeding against the Contractor/Supplier/ Fabricator and notwithstanding any security or other guarantee that the Employer may have in relation to the Contractor's/Supplier's/ Fabricator's liabilities.

This Guarantee shall remain in force upto and including…….. [5] and shall be extended from time to time for such period as may be desired by Employer.

This Guarantee shall not be determined or affected by liquidation or winding up, dissolution or change of constitution or insolvency of the Contractor/ Supplier/ Fabricator but shall in all respects and for all purposes be binding and operative until payment of all money payable to the Employer in terms thereof.

Unless a demand or claim under this guarantee is made on us in writing on or before the ……[6] (3 months more than the present date of validity of Bank Guarantee) we shall be discharged from all liabilities under this guarantee thereafter.

We, …… BANK lastly undertake not to revoke this guarantee during its currency except with the previous consent of the Employer in writing.

Notwithstanding anything to the contrary contained hereinabove:

a) The liability of the Bank under this Guarantee shall not exceed…… [7]
b) This Guarantee shall be valid up to ……[8]
c) Unless the Bank is served a written claim or demand on or before _____[9] (3 months more than the present date of validity of Bank Guarantee) all rights under this guarantee shall be forfeited and the Bank shall be relieved and discharged from all liabilities under this guarantee irrespective of whether or not the original bank guarantee is returned to the Bank.

We, _____ Bank, have power to issue this Guarantee under law and the undersigned as a duly authorized person has full powers to sign this Guarantee on behalf of the Bank.

Any claim or dispute arising under the terms of this document shall only be enforced or settled in the courts of at Kolkata only.

For and on behalf of
(Name of the Bank)

Dated…….

Place of Issue…….

[1] NAME AND ADDRESS OF THE VENDOR /CONTRACTOR / SUPPLIER .

[2] DETAILS ABOUT THE NOTICE OF AWARD/CONTRACT REFERENCE

[3] PROJECT/SUPPLY DETAILS

[4] BG AMOUNT IN FIGURES AND WORDS

[5] VALIDITY DATE

[6] DATE OF EXPIRY OF CLAIM PERIOD

[7] BG AMOUNT IN FIGURES AND WORDS.

[8] VALIDITY DATE

[9] DATE OF EXPIRY OF CLAIM PERIOD

Note:

1. **Units are advised that expiry of claim period may be kept 2/3 months after validity date.**

2. **In Case of Bank Guarantees submitted by Foreign Vendors-**

   a. **From Nationalized/Public Sector / Private Sector/ Foreign Banks (BG issued by Branches in India)** can be accepted subject to the condition that the Bank Guarantee should be enforceable in the town/city or at nearest branch where the Unit is located i.e. Demand can be presented at the Branch located in the town/city or at nearest branch where the Unit is located.

   b. **From Foreign Banks (wherein Foreign Vendors intend to provide BG from local branch of the Vendor country's Bank)**

   b.1 In such cases, in the Tender Enquiry/ Contract itself, it may be clearly specified that Bank Guarantee issued by **any of the Consortium Banks only** will be accepted by BHEL. As such, Foreign Vendor needs to make necessary arrangements for issuance of Counter- Guarantee by Foreign Bank in favour of the Indian Bank (BHEL's Consortium Bank). It is advisable that all charges for issuance of Bank Guarantee/ counter- Guarantee should be borne by the Foreign Vendor. The tender stipulation should clearly specify these requirements.

   b.2 **In case, Foreign Vendors intend to provide BG from** Overseas Branch of our Consortium Bank (e.g. if a BG is to be issued by SBI Frankfurt), the same is acceptable. However, the procedure at **sl.no. b.1** will required to be followed.

   b.3 The BG issued may preferably be subject to Uniform Rules for Demand Guarantees (URDG) 758 (as amended from time to time). In case, of Foreign Vendors, the BG Format provided to them should clearly specify the same.

   b.4 The BG should clearly specify that the demand or other document can be presented in electronic form.

PROFORMA OF BANK GUARANTEE FOR EARNEST MONEY
(On non-Judicial paper of appropriate value)

Bank Guarantee No……..

Date……..

To

(Employer's Name and Address)
……..

Dear Sirs,

In accordance with the terms and conditions of your Invitation for Bids/Notice Inviting Tender No……[1](Tender Conditions) M/s. ……. having its registered office at ……[2] (hereinafter referred to as the '**Tenderer**'), is submitting its bid for the work of**……..** for……[3]. at Bharat Heavy Electricals Limited, Power Sector Eastern Region, BHEL Bhawan, Plot No 9/1, DJ Block, Sector-II, Salt lake City, Kolkata – 700091.[4](name of the Employer)
The Tender Conditions provide that the **Tenderer** shall pay a sum of Rs **……..** as Earnest Money Deposit in the form therein mentioned. The form of payment of Earnest Money Deposit includes Bank Guarantee executed by a Scheduled Bank.

In lieu of the stipulations contained in the aforesaid Tender Conditions that an irrevocable and unconditional Bank Guarantee against Earnest Money Deposit for an amount of .....[5] ..... is required to be submitted by the Tenderer as a condition precedent for participation in the said Tender and the Tenderer having approached us for giving the said Guarantee,,

we, the .....*[Name & address of the Bank]* ..... having our Head Office at ……..(hereinafter referred to as the Bank) being the Guarantor under this Guarantee, hereby irrevocably and unconditionally undertake to forthwith and immediately pay to the Employer without any demur, merely on your first demand any sum or sums of Rs. [5] .....(*).....without any reservation, protest, and recourse and without the beneficiary needing to prove or demonstrate reasons for its such demand. Any such demand made by the 'Employer' shall be

conclusive and binding on us irrespective of any dispute or difference raised by the Tenderer.

The payment so made by us under this Guarantee shall be a valid discharge of our liability for payment hereunder and the Tenderer shall have no claim against us for making such payment.

We …….. Bank further agree that the Employer shall have the fullest liberty without our consent and without affecting in any manner our obligations hereunder to vary any of the terms and conditions of the said Tender or to extend the time of submission of bids from time to time or to postpone for any time or from time to time any of the powers exercisable by the Employer against the said Tenderer and we shall not be relieved from our liability by reason of any such variation, or extension being granted to the said Tendered or for any forbearance, act or omission on the part of the Employer or any indulgence by the Employer to the said Tenderer or by any such matter or thing whatsoever which under the law relating to sureties would but for this provision have effect of so relieving us.

The Bank also agrees that the Employer at its option shall be entitled to enforce this Guarantee against the Bank as a principal debtor, in the first instance without proceeding against the Tenderer and notwithstanding any security or other guarantee that the Employer may have in relation to the Tenderer's liabilities.

This Guarantee shall be irrevocable and shall remain in force upto and including……[6] and shall be extended from time to time for such period as may be desired by the Employer.

This Guarantee shall not be determined or affected by liquidation or winding up, dissolution or change of constitution or insolvency of the Tenderer but shall in all respects and for all purposes be binding and operative until payment of all money payable to the Employer in terms hereof. However, unless a demand or claim under this Guarantee is made on us in writing on or before the ……[7] we shall be discharged from all liabilities under this Guarantee.

We, ……. Bank lastly undertake not to revoke this guarantee during its currency except with the previous consent of the Employer in writing.

Notwithstanding anything to the contrary contained hereinabove:

a) The liability of the Bank under this Guarantee shall not exceed……[5]…..

b) This Guarantee shall be valid up to ……[6]

c) Unless the Bank is served a written claim or demand on or before _____[7] all rights under this guarantee shall be forfeited and the Bank shall be relieved and discharged from all liabilities under this guarantee irrespective of whether or not the original bank guarantee is returned to the Bank

We, _____ Bank, have power to issue this Guarantee under law and the undersigned as a duly authorized person has full powers to sign this Guarantee on behalf of the Bank.

For and on behalf of

(Name of the Bank)

Date……

Place of Issue……

[1] *Details of the Invitation to Bid/Notice Inviting Tender*

[2] *Name and Address of the Tenderer*

[3] *Details of the Work*

[4] *Name and Address of BHEL Unit/Division/Region (Already filled up)*

[5] *BG Amount in words and Figures*

[6] *Validity Date*

[7] *Date of Expiry of Claim Period*

Note:

1. **Units are advised that expiry of claim period may be kept 2/3 months after validity date. As per Works Policy, the Bank Guarantee shall be valid for at least six months.**

2. **In Case of Bank Guarantees submitted by Foreign Vendors-**

a. **From Nationalized/Public Sector / Private Sector/ Foreign Banks (BG issued by Branches in India)** can be accepted subject to the condition that the Bank Guarantee should be enforceable in the town/city or at nearest branch where the Unit is located i.e. Demand can be presented at the Branch located in the town/city or at nearest branch where the Unit is located.

b. **From Foreign Banks (wherein Foreign Vendors intend to provide BG from local branch of the Vendor country's Bank)**

b.1 In such cases, in the Tender Enquiry/ Contract itself, it may be clearly specified that Bank Guarantee issued by **any of the Consortium Banks only** will be accepted by BHEL. As such, Foreign Vendor needs to make necessary arrangements for issuance of Counter- Guarantee by Foreign Bank in favour of the Indian Bank (BHEL's Consortium Bank). It is advisable that all charges for issuance of Bank Guarantee/ counter-Guarantee should be borne by the Foreign Vendor. The tender stipulation should clearly specify these requirements.

b.2 **In case, Foreign Vendors intend to provide BG from** Overseas Branch of our Consortium Bank (e.g. if a BG is to be issued by SBI Frankfurt), the same is acceptable. However, the procedure at **sl.no. b.1** will required to be followed.

b.3 The BG issued may preferably be subject to Uniform Rules for Demand Guarantees (URDG) 758 (as amended from time to time). In case, of Foreign Vendors, the BG Format provided to them should clearly specify the same.

b.4 The BG should clearly specify that the demand or other document can be presented in electronic form.

CONTENTS

CLAUSE NO	DESCRIPTION
1.0	PROJECT INFORMATION
2.0	SCOPE
3.0	NAME OF WORK
4.0	SPLITTING
5.0	DEWATERING
6.0	GENERAL
7.0	SITE VISIT
8.0	QUALITY ASSURANCE PROGRAMME/ OCCUPATIONAL HEALTH, SAFETY & ENVIRONMENT MANAGEMENT
9.0	EXECUTION OF WORK
10.0	IMTE
11.0	TEST CERTIFICATE FOR T&P
12.0	INSURANCE
13.0	TOOLS & PLANTS
14.0	WATER, POWER & OTHER FACILITIES
15.0	PERFORMANCE BOND/ SECURITY DEPOSIT
16.0	TIME SCHEDULE
17.0	CONSTRUCTION SCHEDULE
18.0	TAXES, DUTIES ETC
19.0	TERMS OF PAYMENT
20.0	MOBILISATION ADVANCE/IBRA
21.0	PRICE VARIATION CLAUSE
22.0	OVER RUN CHARGES/ RATE REVISION
23.0	LIQUIDATED DAMAGE/ PENALTY
24.0	IDLE CHARGES/ EXTRA WORK
25.0	GUARANTEE
26.0	CONTRACT PRICE
27.0	OTHERS

This section of Technical conditions of contract (TCC) is applicable for service part of contract. The conditions mentioned inscribed hereunder shall be read along with other volumes of tender, i.e. general conditions of contract (GCC, Volume-IB), Volume-III etc and in case of any conflict or inconsistency, the provision of the TCC, Volume-IF shall prevail.

CLAUSE NO	DESCRIPTION
1.0	**PROJECT INFORMATION**
1.1	INTRODUCTION
	1X250 MW NSPCL ROURKELA TPP-III, is located in district Sundargarh,Odisha state, India. The Bidder shall acquaint himself by a visit to the site, if felt necessary, with the conditions prevailing at site before submission of the bid. The information given here in under is for general guidance and shall not be contractually binding on the Owner. All relevant site data/information as may be necessary shall have to be obtained / collected by the Bidder.
1..2	APPROACH TO SITE
	The nearest town is Rourkela. The site is well Connected through Road . Nearest railway station is Rourkela on Howrah-Mumbai main line (Electrified Double track, Broad Gauge) from the plant site. Nearest airport is Ranchi Airport, Odisha .
1.3	Owner: NSPCL(NTPC SAIL POWER COMPANY PRIVATE LIMITED)
2.0	**SCOPE**
	Scope of work and technical specification shall be as per technical specification of geo–technical investigation & technical specification of topographical survey. Rates/ prices are to be quoted as per description of work in Price schedule. The successful bidder will be issued necessary drawing at site for execution. The scope covers broadly the following.
2.1	Preparation and submission of preliminary/draft report (in duplicate) as per specification/instruction of BHEL containing firm recommendation on the type of foundation to be adopted. This report shall include details of bore logs, trial pits plate load tests, cone penetration test, relevant laboratory test etc based on which the recommendations were arrived at. The recommendation shall be supported by necessary calculations. The bidder may have to visit BHEL/ PEM/ Noida for finalisation of report.
2.2	Preparation and submission of final report incorporating the comments of BHEL on the draft report, six copies of the final report along with one reproducible of all annexures to the report (bore logs, graphs, tables, charts etc) shall be submitted.
3.0	**NAME OF WORK**
	The scope covers providing labour, supervision, materials, T&Ps etc for topographical survey & geotechnical investigation work for Ash Dyke-E as per specification and tender terms & conditions for 1X250 MW NSPCL ROURKELA TPP-III.
4.0	**SPLITTING**
	BHEL reserves the right to split the work and award any part of the work to any agency without assigning any reasons whatsoever.
5.0	**DEWATERING**
	Contractor shall ensure at all times that his work area and approach / access roads are free from accumulation of water, so that the work areas & materials are safe and the erection work as well as progress schedule are not affected. No separate claim in this regards shall be admitted.
6.0	**GENERAL**
6.1	Bidders will have to submit "no deviation certificate" as per enclosed format. They

	may please note that, in case of bidders taking any deviation from the tender terms, bids are likely to be rejected. Bidders are also required to fill all annexures of tender.
6.2	The contractor shall comply with all the rules and regulations of the local authorities, all statutory laws including minimum wages, workmen compensation etc. All registration and statutory inspection fees, if any, in respect of the work executed by the contractor shall be to his account.
6.3	Contractor's engineer & supervisors shall be adequately qualified and also inclined to do a quality job.
6.4	BHEL will not provide any T&P/ instruments/ consumables to the party. The work under the scope of the contractor will be deemed to be completed, in all respects, only when so certified by BHEL.
6.5	Review of preliminary report at BHEL/ PEM/ Noida: After submission of preliminary report by contractor, they will have to visit PEM/BHEL office at Delhi, to explain/ clarify/discuss the issues connected with the work/report and submit the final report accordingly. Such visits will be part of scope of work.
6.6	The Contractor shall have total responsibility for all equipment and materials in his custody stores, loose, semi-assembled and/or erected by him at Site. The Contractor shall make suitable security arrangements including employment of security personnel to ensure the protection of all materials, equipment and works from theft, fire, pilferage and any other damages and loss. All materials of the Contractor shall enter and leave the Employer Site only with the written permission of the BHEL/Employer in the prescribed manner.
7.0	**SITE VISIT**
	The bidder must visit the actual site of 1X250 MW NSPCL ROURKELA TPP-III, to acquire full knowledge and information about the conditions prevailing at site as well as, in and around the project site, together with the statutory, obligatory, mandatory requirements of various authorities before submission of the bid.
8.0	**QUALITY ASSURANCE PROGRAMME/ OCCUPATIONAL HEALTH, SAFETY & ENVIRONMENT MANAGEMENT**
8.1	BHEL, Power Sector (ER) is ISO-9001:2015 certified company. Quality of work to customer's satisfaction and system requirements are the essence of ISO-9001:2015 certification. BHEL, PSER has also obtained HSE certification (ISO-14001:2015 & OHSAS-18001;2007). Contractor will organize/ plan/ perform, all their activities to meet with these standards.
8.2	The contractor shall adopt suitable quality assurance program to control activities as necessary. Such program shall be outlined by the contractor and shall be finally accepted by the BHEL/ owner. A quality assurance program of the contractor shall generally cover the following.
8.2.1	His organization structure and qualification data of key personnel for the management and implementation of the proposed quality assurance program.
8.2.2	System for site erection control including process controls and fabrication and assembly controls.
8.2.3	Control of non-conforming items and system for corrective actions.
8.2.4	Inspection and test procedure for all site related works.
8.2.5	Calibration and testing of measuring and testing equipment (IMTEs) at required intervals as per standards, specifications and direction of BHEL.
8.2.6	System for quality audit.
8.2.7	System for indication and appraisal of inspection status.
8.2.8	System for maintenance of records.
8.3	Contractor will comply with HSE (Health, safety & environment) requirements of BHEL. All applicable OCPs (Operational control procedures) will be followed by contractor as per BHEL instructions. This will be done as part of normal scope of work. Applicable OCPs will be made available to the contractor during work execution at site. Contractor will follow these, within quoted rates. Suitable measures will be taken by contractor for waste management and environment related laws/ legislation as a part of normal construction activities.

8.4	The Contractor shall provide necessary first-aid facilities for all his employees, representatives and workmen working at the Site. Enough number of Contractor's personnel shall be trained in administering first aid.
8.5	It is imperative on the part of the contractor to join and effectively contribute in joint measures such as tree plantation, environment protection, contributing towards social upliftment, keeping good relation with local populace etc.
9.0	**EXECUTION OF WORK**
9.1	The contractor shall obtain the approval for the field and laboratory testing scheme proposed by him from BHEL before undertaking the geotechnical investigation work and shall submit the report containing the findings and recommendations.
9.2	Only one bench mark and one corner grid point will be furnished to the contractor. The location of bore holes and other tests, their demarcation, alignment, level etc. shall be the responsibility of the contractor and no extra payment shall be made to the contractor by BHEL on such account.
9.3	Bidder to note that survey work is to be carried as per drawing of the area that will be given to the vendor during execution stage.
9.4	Dewatering the surface as well as subsoil water during execution of the work shall be carried out by the contractor at his own cost.
9.5	Surplus excavated earth, materials and muck shall be disposed off by the contractor at his own cost and to the places as directed by the engineer. The site shall be cleared of all bentonite slurry, muck etc. after execution of work as directed by the Engineer, Backfilling wherever specified in the specification shall be watered, rammed and compacted.
9.6	The contractor shall make his own arrangement for accommodating his personnel, equipment and materials at site and his quoted rates shall be inclusive of the same. The contractor shall arrange accommodation for their staff and employees, required for the project work, outside the plant premises, at their own cost. However, successful contractor's security personnel, shall be allowed to be stationed at the work place subject to prior approval from BHEL / NSPCL
9.7	Any hutment/temporary structure/old foundations/ grass/trees/bushes etc. or buried pipe/cable coming in the working fronts (Existing, if any) are to be removed safely without extra cost to BHEL. Bidders must inspect the actual work site before submission of their offer.
9.8	Contractor shall ensure arrangement of work beyond normal working hours in order to meet the time schedule. However work during extended hours shall be allowed only on specific request from the contractor, subject to approval of BHEL/ customer.
9.9	The contractor shall arrange for transportation of all his materials and equipment, required for successful completion of the works under this contract. BHEL shall not, in anyway, be responsible for transportation of such materials or equipment and shall not issue any permit etc. for the purpose.
9.10	In addition to the local laws and regulations the Contractor shall also comply with the Minimum Wages Act and the Payment of Wages Act (both of the Government of India) and the rules made there under in respect of its labour and the labour of its sub-contractors currently employed on or connected with the contract.
9.11	All registration and statutory inspection fees, if any, in respect of his work pursuant to this Contract shall be to the account of the Contractor.
9.12	However, any registration, statutory inspection fees lawfully payable under the provisions of any statutory laws and its amendments from time to time during erection in respect of the plant equipment ultimately to be owned by the Employer, shall be to the account of the Employer. Should any such inspection or registration need to be re-arranged due to the fault of the Contractor or his Sub-Contractor, the additional fees to such inspection and/or registration shall be borne by the Contractor.
9.13	The Contractor upon signing of the Contract shall, in addition to a Project Co-ordinator, nominate another responsible officer as his representative at Site suitably designated for the purpose of overall responsibility and coordination of the Works to

	be performed at Site. Such person shall function from the Site office of the contractor during the currency of Contract.
9.14	All the Works shall be performed to the lines, grades and elevations indicated on the drawings. The Contractor shall be responsible to locate and layout the Works. Basic horizontal and vertical control points will be established and marked by the Employer at Site at suitable points. These points shall be used as datum for the works under the Contract. The Contractor shall inform the Employer well in advance of the times and places at which he wishes to do work in the area allotted to him so that suitable datum points may be established and checked by the Employer to enable the Contractor to proceed with his works. Any work done without being properly located may be removed and/or dismantled by the Employer at Contractor's expense.
9.15	The Contractor shall bring to Site all equipment, components, parts, materials, including construction equipment, tools and tackles for the purpose of the Works under intimation to the BHEL/Employer. These equipment, components, parts, materials, including construction equipment, tools and tackles shall not on any account be removed or taken away by the Contractor without the written permission of the BHEL/Employer. The Contractor shall be solely liable and responsible for any loss or destruction thereof and damage thereto of these materials. The Employer shall have a lien on such goods for any sum or sums which may at any time be due or owing to him by the Contractor, under, in respect of or by reasons of the Contract. After giving a fifteen (15) days notice in writing of his intention to do so, the Employer shall be at liberty to sell and dispose off any such goods, in such manner as he shall think fit including public auction or private treaty and to apply the proceeds in or towards the satisfaction of such sum or sums due as aforesaid. After the completion of the Works, the Contractor shall remove from the Site under the direction of the Employer the materials such as construction equipment, erection tools and tackles, scaffolding etc. with the written permission of the Employer. If the Contractor fails to remove such materials, within fifteen (15) days of issue of a notice by the Employer to do so then the Employer shall have the liberty to dispose off such materials and credit the proceeds thereto to the account of the Contractor.
10.0	**IMTE**
	Contractor shall ensure deployment of reliable and calibrated instrument, measuring and test equipments (IMTEs). The IMTE shall have test/calibration certificate from authorised/ Govt approved agencies. The contractor shall also keep provision of alternate arrangement for such IMTEs, so that the work does not suffer when a particular IMTE is sent for calibration. Re-testing/ re-calibration shall also be arranged by the contractor at their own cost at regular intervals during the period of use as advised by BHEL.
11.0	**TEST CERTIFICATE FOR T&P**
	All T&Ps, lifting tackles, pulling devices, wire rope and slings to be deployed by the contractor, must bear valid/latest test certificates for their suitability, and the documents shall be preserved at site.
12.0	**INSURANCE**
	The contractor shall make available the original insurance cover(s) taken by him, against his T&P, assets and workmen compensation and any other cover as may be pertinent to his works and obligatory in terms of law, to BHEL for necessary verification in regard to their adequacy, before commencement of work. However, irrespective of such verification/ acceptance, the responsibility to maintain adequate insurance coverage at all times during the period of the contract shall be of the contractor alone. The contractor shall deal directly with the Insurance company(s) and shall be responsible in regard to maintenance of such insurance covers.
13.0	**TOOLS & PLANTS**
13.1	The minimum tools and plants that are required to be deployed by the contractor is furnished below.
13.1.1	Shell and auger boring set - 01 set.
13.1.2	Equipment for bore hole (rotary core drilling unit - hydraulic feed) - 01 sets.

13.1.3	Diamond bit drill - 02 nos.	
13.1.4	Dynamic cone penetration test equipment - 01 set.	
13.1.5	Dewatering pump 2 HP/ 4 HP - 04 nos.	
13.2	The above list is indicative only and the contractor shall ensure mobilization of adequate resources to complete the work under this contract within the specified contract period.	
13.3	Any addition, deletion or modification required, as considered by BHEL on the above listed tools & plants to meet the schedule at any point of time, shall be deployed by the contractor immediately at no extra cost to BHEL.	
14.0	**WATER, POWER & OTHER FACILITIES**	
14.1	Contractor has to make his own arrangement for water and power supply, as shall be required to carry out the entire scope of work under this tender specification at his own cost. BHEL shall not be responsible, for providing any source of water or power to the contractor. The contractor may have to carry out the boring jobs even during the night. Hence all necessary arrangements may be deployed to ensure 24 hour working to ensure timely completion of the job.	
14.2	All resources including T&P, manpower, consumables etc, required for survey, investigation, testing & successful completion of job are to be arranged by the contractor within the quoted/ accepted rates.	
14.3	Contractor has to make his own arrangement at his cost for completing the formalities with the all authorities/ customer, if required, for bringing their material, plant, equipment at site for execution of the work.	
14.4	Contractor has to make his own arrangement for accommodation, transportation & other facilities of their workmen/ employees at their own cost. Contractor has to make his own arrangement for computer facilities (including stationary), to carry out their portion of work and for preparation of reports etc., at their own cost. Providing watch & ward for security and safety of their scope of materials will be the responsibility of contractor at their cost. BHEL may call for weekly/ monthly meeting for reviewing the progress of the work and the contractor will comply with it.	
15.0	**PERFORMANCE BOND/ SECURITY DEPOSIT**	
15.1	Performance bond is not applicable.	
15.2	Security deposit shall be governed by provision of GCC.	
16.0	**TIME SCHEDULE**	
16.1	The entire scope of the work under this tender shall be completed within the stipulated time of 60 days from date of intimation by BHEL.	
16.2	The contractor shall mobilise resources for start of work within the days stipulated in construction schedule.	
17.0	**CONSTRUCTION SCHEDULE**	
	The bidder shall strictly adhere to the time schedule furnished below and mobilise resources accordingly so as to complete the entire scope of the work under this contract within the stipulated time of 60 days from date of intimation by BHEL.	
	Milestone	Time
17.1	Site mobilisation & starting of soil Investigation work.	Within 10 (ten) days from the date of intimation by BHEL
17.2	Submission of topographical survey report.	Within 40 days.
17.3	Completion of soil investigation jobs and submission of preliminary report.	Within 45 days.
17.4	Completion of all balance jobs and submission of final report for review and approval.	Within 60 days.
17.5	Soil investigation work can be commenced simultaneously as parallel activities after receipt of LOI/ handing over of site.	
18.0	**TAXES, DUTIES ETC**	
18.1	All taxes excluding GST & BOCW Cess (as specified elsewhere in the tender) but including, Charges, Royalties, any State or Central Levy and other taxes for materials if any obtained for the work and for execution of the contract shall be borne	

	by successful bidder and shall not be payable extra by BHEL. Any increase of above at any stage during execution of contract, including extension of the contract, shall have to be borne by successful bidder contractor. Bidder's quoted/ accepted rates/ price shall be inclusive of all such requirements.
18.2	GST along with Cess (as applicable) legally leviable & payable by successful bidder as per GST Law shall be paid by BHEL, extra. Hence, bidder shall not include GST along with Cess (as applicable) in their quoted rates/ price.
18.3	Successful bidder shall furnish proof of GST registration with GSTN Portal covering the services under this contract. Registration should also bear endorsement for the premises from where the billing shall be done by successful bidder on BHEL for this project / work.
18.4	Since GST on output will be paid by BHEL separately as enumerated above, bidder's your quoted rates / price should be after considering the Input Credit under GST law at bidder's end.
18.5	TDS under Income Tax shall be deducted at prevailing rates on gross invoice value from the running bills (RA bills) unless exemption certificate from the appropriate authority / authorities is furnished.
18.6	TDS under GST shall be deducted at applicable rates on gross invoice value from the running bills (RA bills).
18.7	Bidder shall note that GST Tax Invoice complying with GST Invoice Rules (Section 31 of GST Act & Rules referred thereunder) wherein the 'Bill To' details shall encompass following. BHEL GSTN – Refer attached GSTN code table of BHEL. Name - BHARAT HEAVY ELECTRICALS LIMITED Address - Shall be intimated later. Specific details of BHEL GSTN, Name and Address as stated above, have been specified elsewhere in the tender.
18.8	Successful bidder to intimate immediately on the day of removal of goods (in case of any supply of goods) to BHEL along with all relevant details and send a scanned copy of Tax Invoice to BHEL through following communication mode for enabling BHEL to meet its GST related compliances. Portal address. and Email address – Shall be intimated later. Specific details of above shall be intimated to successful bidder by BHEL at appropriate juncture.
18.9	In case of delay in submission of above mentioned documents on the date of despatch, BHEL may incur penalty / interest for not adhering to Invoicing Rules under GST Law. The same will be liable to be recovered from successful bidder, in case such delay is not attributable to BHEL.
18.10	In case of raising any Supplementary Tax Invoice (Debit / Credit Note), successful bidder shall issue the same containing all the details as referred to in Section 34 read with Section 31 of GST Act & Rules referred there under.
18.11	Successful bidder shall comply with the Time Limit prescribed under the GST Law and rules thereof for raising of the Tax Invoice. If any supply of goods is applicable, successful bidder shall also ensure prompt delivery of goods after despatch.
18.12	Bidder shall note that in case GST credit is delayed / denied to BHEL due to delayed / non receipt of goods and / or Tax Invoice or expiry of the timeline prescribed in GST Law for availing such ITC, or any other reasons, not attributable to BHEL, GST amount shall be recoverable from successful bidder along with interest levied/ leviable on BHEL, as the case may be.
18.13	Successful bidder shall upload the invoices raised on BHEL in GSTR-1 within the prescribed time as given in the GST Act. Bidder shall note that in case of delay in declaring such invoice in your return and GST credit availed by BHEL is denied or reversed subsequently as per GST Law, GST amount paid by BHEL towards such ITC reversal as per GST law shall be recoverable from the successful bidder along with interest levied / leviable on BHEL.
18.14	Way Bill: Successful bidder to arrange for way bill / e-waybill for any transfer of goods for the execution of the contract. Successful bidder has to make their own arrangement at their cost for completing the formalities, if required, with Issuing Authorities, for bringing materials, plants & machinery at site for execution of the

	works under this contract, Road Permit / Way Bill, if required, shall be arranged by successful bidder and BHEL will not supply any Road Permit/ Way Bill for this purpose.
18.15	Any new taxes & duties, if imposed subsequent to due date of offer submission as per NIT & TCN, by statutory authority during contract period (including extension, if the same is not attributable to you), shall be reimbursed by BHEL on production of relevant supporting document to the satisfaction of BHEL. However, you shall obtain prior approval from BHEL before depositing new taxes and duties.
18.16	Benefits and / or abolition of all existing taxes must be passed on to BHEL against new taxes, if any, proposed to be introduced at a later date.
19.0	**TERMS OF PAYMENT**
19.1	Subject to any deduction which BHEL may be authorised to make under the contract, the contractor on the certificate of the Engineer at site shall be entitled for payments of his running bills as explained hereunder.
19.1.1	90 % of item wise unit rate will be payable on completion of site/ lab investigations.
19.1.2	5 % of item wise unit rate will be payable on submission of preliminary report.
19.1.3	5 % of item wise unit rate will be payable on submission of final report.
19.2	The contractor shall submit his running bill, once in a month at the end of each month. The RA bill complete in all respect, accompanied by BHEL engineers certified measurement sheets, jointly signed, will be paid after 30 days of submission of bill, subject to completeness and correctness. Income Tax at the prevailing rates on gross value of work done & applicable surcharge shall be deducted from contractor's bill, unless exempted by Income Tax Authority.
20.0	**MOBILISATION ADVANCE/IBRA**
	No mobilization advance/interest bearing recoverable advance will be paid to the contractor.
21.0	**PRICE VARIATION CLAUSE**
	The price shall remain firm throughout the contract period including extension period, if any.
22.0	**OVER RUN CHARGES/ RATE REVISION**
	Over run charges/ rate revision will not be admissible/ applicable for this contract.
23.0	**LIQUIDATED DAMAGE/ PENALTY**
	Shall be as per the provision of GCC.
24.0	**IDLE CHARGES/ EXTRA WORK**
	Not applicable.
25.0	**GUARANTEE**
	Guarantee period shall be 12 months from the date start of guarantee period as per relevant clause of GCC. Commencement of guarantee period shall be from the date completion of work under the contract as certified by BHEL
26.0	**CONTRACT PRICE**
26.1	Bidder shall quote their rates strictly in accordance with prescribed Price Schedule, Volume-III (latest revision).
26.2	The quantities of various items mentioned in the price schedule, Volume-III are approximate, based on very preliminary information and may vary to any extent or to be deleted altogether. The quoted rates of each item will remain firm throughout the period of execution including extension, for reasons whatsoever, as long as variation in the total value of the work executed under any part of the this contract including extra items, if any, but excluding any price variation remains, if any, remains within (+/-) 15% (plus/ minus fifteen percent) of the awarded price of LOI.
27.0	**OTHERS**
27.1	BHEL does not contemplate to split the job.
27.2	All other terms & conditions shall be as per provision of Volume-IB (GCC).

BHARAT HEAVY ELECTRICALS LTD

STANDARD SPECIFICATION
FOR
GEOTECHNICAL INVESTIGATION

SPECIFICATION NO. PE-TS-999-603-002

JUNE, 2009

POWER SECTOR
PROJECT ENGINEERING MANAGEMENT
PPEI BUILDING, PLOT NO. 25
SECTOR-16A
NOIDA (U.P.)-201301

STANDARD SPECIFICATION FOR GEOTECHNICAL INVESTIGATION

1.0 GENERAL

1.1 This specification covers the technical requirements for a detailed "geotechnical investigation and submission of a detailed geotechnical report". The detailed geotechnical investigation shall be carried out onshore to provide the designer with sufficiently accurate information both general and specific about the sub-strata profile and relevant soil and rock parameters at site on the basis of which the foundation for various structures and equipments of the power station can be designed rationally. Such structures would include main power house, chimney, boiler foundation, turbo-generator foundation, foundation for vibratory equipments, deep pits, reservoir, ash pond, pipe supports and all other related structures of the power station etc. The above list is indicative and not exhaustive. The range of load intensities from the various structures are expected to be between 50 kN/sqm and 500 kN/sqm.

2.0 SCOPE

2.1 The work shall include mobilization of all necessary equipments, providing necessary engineering supervision and technical personnel, skilled and unskilled labours, arranging water for drilling etc as required to carry out the entire field as well as laboratory investigation, analysis and interpretation of test data collected and preparation of a geotechnical report. The entire field as well as laboratory investigation work shall be supervised by a graduate/post graduate in civil engineering with atleast 5 years of site experience in respective areas of geotechnical investigation work. A geologist shall also be deputed at site during investigation whenever rock drilling is undertaken. The scheduling of laboratory tests, analysis and interpretation of test results, drafting of report and recommendations shall be carried out by a post graduate in geotechnical engineering with atleast 5 years of experience.

2.2 The contractor shall make his own arrangements for locating the co-ordinates and position of bore holes, trial pits and other field tests as per the drawings/sketches supplied to him and for determining the reduced levels at these locations with respect to a single bench mark indicated by the engineer-in-charge. Two established reference lines will be indicated to him. The contractor has to provide at the site all the required survey instruments to the satisfaction of the engineer-in-charge so that the work can be carried out accurately according to the specification and drawings.

2.3 All the field data shall be recorded in the proforma recommended in Indian Standard Codes and the field records shall be countersigned by the engineer-in-charge. The contractor shall submit two copies of the field borelogs to the engineer-in-charge soon after the completion of each bore hole. All the investigations are to be carried out by the contractor as per the priority requirements of the engineer-in-charge.

2.4 The contractor shall intimate the engineer-in-charge giving reasons if any additional specific tests he consider necessary to be carried out duly considering local sub-soil conditions. In case the proposal for conducting additional specific tests is approved by the engineer-in-charge then same shall also be carried out.

2.5 Whenever the contractor is unable to extract undisturbed samples he should immediately inform the engineer-in-charge. In such a case payment for boring charges shall be subject to the engineer-in-charge being satisfied that adequate effort has been made to extract undisturbed samples.

2.6 All the laboratory test data shall be recorded in the proforma recommended in the Indian Standard Codes and a copy of these shall be sent to the engineer-in-charge every week during the progress of laboratory testing. Whenever desired during the progress of work the owner/engineer-in-charge may be present at the laboratory where the contractor is arranging for execution of the laboratory tests.

2.7 The contractor shall interact with the engineer-in-charge to get acquainted with the different type of structures envisaged and in assessing the load intensities on the foundation for the various structures of the power project in order to enable him/her to make

specific recommendation for the depth & type of foundation and the allowable bearing pressure. The contractor shall submit detailed geotechnical report after incorporating the comments (if any) on the draft report.

2.8 The "Standard Specification for Geotechnical Investigation" shall be read in conjunction with the document titled "Schedule of Quantities for Geotechnical Investigation" and amendments (if any) which shall be furnished specific project wise separately.

3.0 TENDER DRAWING

3.1 A tender drawing titled "DYKE-E Location Google Map" & other related drawings indicating the location of the Ash DYKE-E to be investigated for locating the project shall be furnished. The location, extent and other details indicated in the drawing including field tests/area(s) are subject to change that may be necessary during actual execution of the work. No claim whatsoever shall be entertained for differences between the location, extent and depth/area(s) etc of tests indicated on the construction drawings and those shown on the tender drawings. The work shall be carried out as per the instructions of the engineer-in-charge.

3.2 The bidder must visit the site prior to submitting his/her quotations to acquaint himself/herself fully with the nature, type, scope of work and involvement therein. The rates quoted shall remain firm during the entire period of execution till completion of the work and any additional claim for lack of knowledge shall not be entertained.

4.0 GENERAL REQUIREMENTS

4.1 In areas which have already been developed, the contractor shall take advantage of existing local knowledge, record of trial pits, bore holes etc in the vicinity and the type of foundations adopted and behaviour of existing structures particularly those of similar nature to the ones proposed for this project.

4.2 The contractor shall make use of information gathered from quarries, unlined wells, cuttings from nearby areas etc. The general

topography of the near by areas will often give some indication about the variation of the soil conditions which are likely to exist.

4.3 The contractor shall gather data regarding the removal of overburden by excavation, erosion or land slides in the areas which may give an idea of the amount of reconsolidation that the soil strata has undergone. Similarly data regarding recent fills shall also be studied to determine the characteristics of the fill as well as the original strata.

4.4 The water level in streams and water courses if any in the neighbourhood shall be noted. Reliable information regarding ground water level shall also be gathered from water level in the near by wells.

4.5 The contractor shall make enquiries and verify regarding earlier use of the site which can have important bearing on its suitability for the proposed structures. This is important particularly in areas where there have been underground works e.g. worked out ballast pits, quarries, old brick fields, mines, mineral workings etc. The possibility of damage to the structures, sewers, conduits and drainage system by subsidence shall also be investigated.

4.6 It is essential that the equipments/instruments are properly calibrated at the commencement of the work so that they represent true values and submit the test reports to the engineer-in-charge. If the engineer-in-charge so desires, the contractor shall arrange for having the instruments tested in presence of the engineer at an approved laboratory at the contractor's cost and the test reports shall be submitted to the engineer-in-charge.

4.7 When blasting with explosives is involved, agency/contractor shall arrange statutory clearances and also the portable magazine for storing/carrying the explosives.

5.0 CODES AND STANDARDS

5 .1 All standards, specification and codes of practice referred to herein shall be the latest editions including all applicable official amendments and revisions.

5.2 In case of conflict between this specification and those (IS codes and standards etc) referred to herein, the former shall prevail.

5.3 All work shall be carried out as per the specification and the following standards and codes.

IS: 1080 Code of practice for design and construction of simple spread foundations

IS: 1498 Classification and identification of soils for general engineering purposes

IS: 1888 Method of load test on soils

IS: 1892 Code of practice for subsurface Investigation for foundation

IS: 1904 Code of practice for design and construction of foundations in soils: General requirements

IS: 2131 Method of standard penetration test for soils

IS: 2132 Code of practice for thin walled tube sampling of soils

IS: 2470 Part-I Code of practice for design and construction of septic tanks

IS: 2720 Method of test for soils (Relevant parts)

IS: 2809 Glossary of terms and symbols relating to soil engineering

IS: 2810 Glossary of terms relating to soil dynamics

IS: 2911 Code of practice for design and construction of pile foundations (Relevant parts)

IS: 2950 Part- I Code of practice for design and construction of raft foundation

IS: 3025 Methods of sampling and testing (Physical and chemical) for water used in Industry

IS: 3043 Code of practice for earthing

IS: 4078 Code of practice for indexing and storage of drill cores

IS: 4434 Code of practice for in-situ vane shear test for soils

IS: 4453 Code of practice for exploration by pits, trenches, drifts and shafts

IS: 4464 Code of practice for presentation of drilling information and core description in foundation investigation

IS: 4968 Part -II Method for subsurface sounding for soils- Dynamic method using cone and bentonite slurry

IS: 4968 Part-III Method for subsurface sounding for soils-Static cone penetration test

IS: 5249 Method of test for determination of in-situ dynamic properties of soil

IS: 5313 Guide for core drilling observations

IS: 5529 Part-I Code of practice for in-situ permeability test – Test in overburden

IS: 5529 Part-II Code of practice for in-situ permeability test - Test in bed rock

IS: 6065 Recommendation for the preparation of geological and geotechnical maps for river valley project

IS: 6403 Code of practice for determination of allowable bearing pressure on shallow foundation

IS: 6926 Code of practice for diamond core drilling for site investigation of river valley projects

IS: 6935 Method of determination of water level in a bore hole

IS: 6955 Code of practice of subsurface exploration for earth and rockfill dams

IS: 7422 Symbols and abbreviations for use in geological maps, sections and subsurface exploratory logs (Relevant parts)

IS: 8009 Part-I Code of practice for calculation of settlement of foundation subjected to symmetrical vertical loads - Shallow foundations

IS: 8009 Part-II Code of practice for calculation of settlement of foundation subjected to symmetrical vertical loads – Deep foundations

IS: 8763 Guide for undisturbed sampling of sands

IS: 8764 Method for determination of point load strength index of rocks

IS: 9143 Method for the determination of unconfined compressive strength of rock materials

IS: 9179 Method for preparation of rock specimen for laboratory testing

IS: 9198 Compaction rammer for soil testing

IS: 9214 Determination of modulus of sub-grade reaction in field

IS: 9259 Specifications for liquid limit apparatus

IS: 9640 Specifications for split spoon sampler

IS: 9669 Specifications for CBR mould and its accessories

IS: 10050 Method for determination of slake durability index of rocks

IS: 10060 Code of practice for subsurface investigation for power house sites

IS: 10074 Specification for compaction mould assembly for light and heavy compaction

IS: 10108 Code of practice for sampling by thin wall sampler with stationary piston

IS: 10589 Equipment for determination of subsurface sounding of soils

IS: 10837 Specifications of moulds for determination of relative density and its accessories

IS: 11229 Specifications for shear box testing of soils

IS: 11315 Part-II Description of discontinuities in rock mass - Core recovery and rock quality

IS: 12070 Code of practice for design and construction of shallow foundations on rocks

IS:13372 (Part I & II) Seismic testing of rock mass – Code of practice

6.0 FIELD INVESTIGATION - SOIL

6.1 Boring

6.1.1 General Requirements

a) Bore holes shall be drilled at specified locations to obtain information about the sub-soil profile, its nature, strength and to collect soil samples for strata identification and conducting laboratory tests. The minimum diameter of the bore hole shall be 150 mm and boring shall be carried out in accordance with the provisions of IS: 1892 and as per this specification.

b) All bore holes shall extend up to the depths shown on the construction drawings or as directed by the engineer-in-charge. If the strata with standard penetration test (SPT) 'N' value greater than 100 with characteristics of rock is met with earlier, the bore hole shall be advanced further by chiselling. Chiselling shall be continued for a maximum depth of 20cm or upto 2 hours whichever is earlier. During chiselling rock fragments/rock cores shall be collected. Identification of rock strata shall be on the basis of visual examination of SPT sample and rock fragments. After it is established that rock is met with, the borehole shall be advanced further by drilling in rock as specified in Clause-7.0 and cores shall be collected. When the bore hole is terminated in soil strata, an additional standard penetration test shall be carried out at the termination depth.

c) Casing pipe shall be used in the borehole to support its sides when side fall is suspected to occur inside the borehole. When casing pipe is used, it shall be ensured that its bottom end is at all times 15 cm above the bottom of the bore hole. In case of cohesionless soils the advancement of the casing pipe shall be such that it does not disturb the soil to be tested or sampled. The casing shall be advanced by slowly turning the casing pipe and not by driving.

d) In-situ tests and collection of undisturbed samples (UDS) shall be carried out at regular intervals and at change of strata or as decided by the engineer-in-charge. Representative disturbed and undisturbed samples shall be preserved for conducting various tests in the laboratory. Water table in the borehole shall be carefully recorded and reported. No water/drilling mud shall be added while boring above ground water table. For cohesionless soil below water table, the water level in the borehole shall all times be maintained at slightly above the water table.

e) The bore hole shall be cleaned using suitable tools up to the depth of testing or sampling ensuring that there is minimum disturbance of soil at the bottom of the bore hole. The process of jetting through an open tube sampler shall not be permitted. In cohesive soils, the borehole may be cleaned using a bailer with a flap valve. Gentle circulation of drilling fluid shall be done when rotary mud circulation boring is adopted.

f) On completion of the borehole, the portion drilled in soil shall be backfilled with sand unless otherwise specified and as directed by the engineer-in-charge.

g) Wash boring shall not be adopted.

6.1 .2 Auger Boring

Auger boring can be adopted in soft to stiff cohesive soils above water table. Augers shall be of helical or post hole type which may be manually or power operated. While boring care shall be taken to minimise the disturbance to the deposits below the bottom of the borehole. The cuttings brought up by the auger shall be carefully examined in the field and the description of all the strata shall be duly recorded in the field borelog as per IS:1498. No water shall be used while auger boring.

6.1.3 Shell and Auger Boring

Shell and Auger boring can be used in all types of soil free from boulders. For cohesionless soil below ground water table, the water level in the bore hole shall always be maintained at or above the ground water level. The use of chisel bit shall be permitted in hard strata with SPT 'N' value greater than 100. Chisel bits may also be used to extend the borehole through local obstruction such as old construction, boulders, rocky formations etc. All other requirements in clause 6.1.2 shall apply for this type of boring also.

6.1.4 Percussion Drilling

This method can be adopted in soil with gravel and boulders when the boring has to be done at a faster rate. This method consists of breaking of the strata by repeated blows from a chisel or drilling bit and bailing out the debris at intervals by adding water into the bore hole. This method is not suitable for careful and very reliable sampling operation because of the disturbance caused during boring. This method shall not be adopted unless otherwise specified or permitted by the engineer-in-charge.

6.1.5 Rotary Mud Circulation Drilling

This method can be used in all types of soil below water table. In this method boring shall be done by rotating the bit fixed at the bottom of the drill rod. Proper care shall be taken to keep a firm contact between the bit and the bottom of the borehole. Bentonite or mud laden fluids shall be used as the drilling fluid to serve as the protective surface inside the borehole.

6.2 Standard Penetration Test (SPT)

This test shall be conducted in all types of soil deposits met within the bore hole to find the variation in the soil stratification by correlating with the number of blows required for unit penetration of a standard penetrometer. This test shall be conducted at every 1m interval alternate to collection of UDS upto 10m depth below ground level and at every 1.5m interval alternate to collection of UDS beyond 10m depth, at every change of strata, at depths wherever undisturbed soil samples could not be collected and as per the directions of the engineer-in-charge. The starting depth of performing SPT shall be 1m below ground level unless otherwise specified. The depth interval between the top level of standard penetration test and to that of (next) undisturbed sampling shall not be less than 1m. The specification for equipments and other accessories, procedure for conducting the test, presentation of test results and collection of disturbed soil samples etc shall conform to IS: 2131.

This test shall be carried out by driving a standard split spoon sampler in the borehole by means of a 63.5 kg hammer having a free fall of 0.75m. The sampler shall be driven using the hammer for 450 mm penetration. While driving, the number of blows for every 150 mm penetration and the penetration for every 50 blows shall be recorded. The number of blows for the last 300 mm drive shall be reported as 'N' value. This test shall be discontinued when the blow count is equal to 100 and the penetration shall be recorded. Refusal shall be considered to be met with when the blow count is equal to 100. At the location where the test is discontinued, the penetration and the corresponding number of blows shall be reported. Sufficient quantity of disturbed soil samples shall be collected from the split spoon

sampler for identification and laboratory testing. The samples shall be visually classified & recorded at the site and shall be properly preserved and labelled for future identification & testing.

6.3 Sampling

6.3.1 General

a) Sufficient number of soil samples shall be collected for reliable estimation of soil properties. The samples collected shall be either disturbed or undisturbed. Disturbed soil samples shall be collected for field identification and conducting laboratory tests such as sieve analysis, index properties, specific gravity, chemical analysis etc. Undisturbed samples shall be collected to estimate physical, strength and settlement properties of the soil.

b) All the accessories required for sampling and the method of sampling shall conform to IS:2132. All disturbed and undisturbed samples collected in the field shall be classified at site as per IS: 1498.

c) All the samples shall be identified with date, bore hole or trial pit number, depth of sampling etc. It is also essential to mark an arrow pointing towards the top surface of the undisturbed sample as the soil was in-situ. Care shall be taken to keep the undisturbed soil samples and box samples vertically with the arrow directing upwards. The tube samples shall be properly trimmed at both ends and suitably sealed with molten paraffin wax at both ends immediately after extracting the samples from the bore hole/trial pit and suitably capped on both sides.

d) When the contractor fails to collect undisturbed soil sample at a specified depth, the borehole shall be advanced by 0.50m and shall be performed with a standard penetration test. The reason for not obtaining the undisturbed soil sample shall be indicated in the borelog.

e) Precaution shall be taken to ensure that there shall not be any change in moisture content and disturbance of the soil samples and they shall be placed in a temporary store at the end of the day's work.

All the samples shall be kept over a bed of sand, jute bags, saw dust etc and covered over the top with similar material. The bed and top cover shall be kept moist till they are properly packed in wooden boxes. The contractor shall be responsible for packing and transporting of all the samples from site to the laboratory within seven days after sampling with proper protection against loss and damage.

f) All the samples shall be suitably packed in wooden boxes using sand, saw dust etc all around the samples before transporting to the laboratory for testing.

6.3.2 Disturbed Samples

a) Disturbed soil samples shall be collected from cuttings and from split spoon sampler in boreholes at regular intervals to provide complete description of soil profile and its variation. The samples shall be immediately stored in airtight jars or polythene bags and labelled with borehole/trial pit number and depth.

b) In elevated areas, if superficial material is available in plenty, then bulk samples from a depth of about 0.5m below ground level shall be collected to establish all required properties to use it as a fill material. Disturbed samples weighing about 250N shall be collected at shallow depths and immediately stored in polythene bags as per IS: 1892. The bags shall be sealed properly and shall be kept in wooden boxes.

6.3.3 Undisturbed Samples

In each borehole UDS shall be collected at regular interval of 1m alternate to conducting SPT upto 10m depth below ground level and at every 1.5m interval alternate to conducting SPT beyond 10m depth and as directed by the engineer-in-charge. The starting depth of collecting UDS shall be 2m below ground level unless otherwise specified and as directed by the engineer-in-charge. Undisturbed samples shall be of 100mm diameter and 450mm length. Samples shall be collected in such a manner that the structure of soil and its moisture content do not get altered. The specification for the accessories required for sampling and the sampling procedure shall

conform to IS:1892 and IS:2132. Undisturbed sampling in sand shall be done using compressed air technique as mentioned in IS:8763. Thin walled sampler shall be used to collect undisturbed samples by pushing the tube into the soil. The sampling tube shall have a smooth finish on both surfaces and minimum effective length of 450mm. The area ratio of sampling tubes shall be less than 12.5%. However in case of very stiff soils area ratio upto 20% shall be permitted.

a) Undisturbed Sampling in Cohesive Soil

Undisturbed samples in soft to stiff cohesive soils shall be obtained using a thin walled sampler. In order to reduce wall friction, suitable precautions such as oiling the surfaces shall be taken. The bore hole shall be cleaned and the depth of sampling below ground level shall be noted. The sampler shall then be attached to the bottom of boring rods and lowered into the borehole. The sampler shall be pushed into the clay layer by hand or by jacking and soil sample of specified length shall be collected without disturbing the soil. The distance by which the sampler penetrates into the soil strata shall be checked. Care shall be taken to ensure that the sampler is not driven too far as this will compress the soil. The sampler shall be rotated to break the core at bottom of the sampler and then steadily drawn up.

b) Undisturbed Sampling using Piston Sampler

Undisturbed samples in very loose saturated sandy & silty soils and very soft clays shall be obtained by using a piston sampler consisting of a sampling cylinder and piston system. In soft clays and silty clays with water standing in the casing pipe, piston sampler shall be used to collect undisturbed samples. During this method of sampling expert supervision is called for.

The interior surface of the sampler shall be smooth, clean and corrosion resistant. Its cutting edge and the ring seals shall be inspected for wear and rejected if worn. Check shall be done to ensure that the moving parts of the sampler function freely before the sampler is lowered into the borehole. While pushing the system into the soil and till the beginning of the sampling operations, the bottom of the piston shall be flushed with the cutting edge of the sampler. At the depth of sampling, the piston should be fixed relative to the

ground and the sampler cylinder shall be independently pressed down smoothly and continuously into the ground. If an obstruction is met, the sampler shall be withdrawn and another sample be taken after the obstruction is removed.

Accurate measurements of the depth of sampling, height of sampler, stroke and length of sample recovery shall be noted and recorded. After the sampler is pushed to the required depth, both the sampler cylinder and the piston system shall be drawn up together ensuring that there shall not be any disturbance to the sample which shall then be protected from changes in moisture content.

c) Undisturbed Sampling in Cohesionless Soils

Undisturbed samples in cohesionless soils shall be obtained as per the procedure given in IS:8763. Compressed air sampler shall be used to take the samples of cohesionless soil below water table. Precautions shall be taken to clean the borehole before sampling. Thin walled tube samplers of 60mm internal diameter shall be used. The height and other dimensions of the sampler shall be recorded before use. Proper care shall be taken to maintain the water level in the bore hole slightly above the ground water table before and during sampling operations. Immediately after the sample is obtained, the ends of the sample shall be waxed and capped to avoid moisture content changes.

6.3.4 Relaxation During Sampling

a) The sampler shall be pushed into the soil and driving of sampler shall be resorted to only when it cannot be pushed into the soil. This shall be done only with the permission of the engineer-in-charge and all the details about the same shall be recorded in the bore logs.

b) In clays when 'N' value is greater than 50, the undisturbed sampling may be replaced by standard penetration test.

6.4 Ground Water

6.4.1 One of the following methods shall be adopted for determining the ground water table in bore holes as per IS:6935 and as per the instructions of the engineer-in-charge.

a) In permeable soils, the water level in borehole shall be allowed to stabilize after lowering it adequately by bailing. When water level inside the borehole is found to be stable, the depth of water level below ground level shall be measured. Stability of sides and bottom of the borehole shall be ensured at all times.

b) For both permeable and impermeable soils, the following method shall be suitable. The borehole shall be filled with water and then bailed out to various depths. Observation on the rise or fall of water level shall be made at each depth. The level at which neither a fall nor a rise is observed shall be considered as the water table elevation. This shall be established by three successive readings of water level taken at an interval of two hours.

6.4.2 In case any variation in the ground water level is observed in any specific boreholes then the water level in these bore holes shall be recorded daily during the course of field investigation. Levels in nearby wells, streams etc if any shall also be noted whenever these readings are taken. If so called for, observation wells shall be drilled for the purpose of long term studies on the fluctuation in ground water levels and pressure. Either stand pipe or piezometer shall be installed at the specified depths in the selected previously drilled bore holes or specially drilled bore holes for this purpose as per the specification and instructions of the engineer-in-charge. Daily water level readings shall be recorded immediately following the installation upto the time of leaving the site. At the end of field work, these installations shall be handed over in satisfactory working condition to the engineer-in-charge without disturbing their position so that the owner can continue further observations.

6.4.3 Stand pipes and piezometers shall consist of 19mm internal diameter rigid unplasticised (UPVC) tubing. All the joints in the tubing shall be made of coupling sleeves. The top of UPVC tubing shall be enclosed in a 75mm diameter galvanised steel pipe of 1.5m length

having a galvanised steel screw cap with well greased threads and the caps shall be tightened such that it would be impossible to loosen by hand. The lower end of the pipe shall have four legs of 6mm thick and 100mm long and welded to have projection of 25mm. The pipe shall be sealed into the ground with cement grout so that it does not rotate. The top end of the pipe shall project about 300mm above ground level unless otherwise specified by the engineer-in-charge. The perforated tubing for the porous element shall be surrounded by a response zone of well graded sand from 500mm below to 150mm above the lower end of the stand pipe or piezometer and the bore hole above the response zone shall be back filled with natural soil or well graded sand.

a) Stand pipe

Stand pipes shall be installed to measure the water level in soils with high permeability such as sand and gravel. The stand pipe shall consist of a perforated tubing attached to the bottom of the UPVC tubing. The perforated tube shall be 150mm long having perforations of diameter not greater than 1mm.

b) Piezometers

Piezometers shall be installed to measure the pore pressures in soil with medium to low permeability. Piezometer shall consist of a porous filter attached to the bottom of the UPVC tubing. The filter shall be 300mm in length and shall be placed in the bore hole and sealed at top and bottom by grouting. Hydraulic piezometers with double line are to be used to remove the air trapped in the system.

6.4.4 Sub-Soil Water Samples

a) Sub-soil water samples shall be collected for carrying out chemical analysis. Representative samples of ground water shall be collected when it is first encountered in boreholes before the addition of water to aid boring or drilling. Water samples shall not be collected when bentonite slurry or mud has been used for drilling operations. If water has been added for drilling purposes or if ground water has been diluted by surface rain water then the bore hole shall be

dewatered and water be allowed to rise from which the sample may be taken.

b) The sampling apparatus shall be such that the water at the desired depth can be collected directly without any disturbance and any change in concentration of constituents like dissolved gases etc. Undue agitation shall be avoided. An ordinary suction pump with its suction end inserted upto the required depth in the borehole shall be used for this purpose.

c) The sample shall be collected in a clean vessel and allowed to settle so that the supernatural liquid can be poured into a clean well rinsed glass or polythene bottle. Sufficient quantity and number of samples shall be collected to carry out the chemical analysis and sent to a laboratory in airtight bottles with proper labelling. Chemical analysis of water samples shall include determination of pH value, turbidity, sulphate, carbonate, nitrate & chloride contents, presence of organic matter and suspended solids etc.

d) In some cases constituents may be mixed and analysed later as specified in the specific test methods. Chemical preservatives may be added to the sample for cases as specified in the test method/IS codes. This shall only be done if analysis cannot be conducted within an hour of collection and shall have the prior written permission and approval of the engineer-in-charge.

6.5 In-situ Permeability Test

6.5.1 In-situ permeability test shall be conducted to determine the water percolation capacity of overburden soil. This test shall be performed inside the bore hole/trial pit at specified depths or in each layer or as per the directions of the engineer-in-charge. The type of test shall be either pump-in or pump-out test depending on the subsoil and ground water conditions. Pump-in test shall be conducted whether ground water in borehole exists or not. Pump-out test shall be conducted to obtain data for dewatering purposes when ground water is met in the borehole. The specification for equipments required for the test and the procedure of testing shall be in accordance with IS: 5529, Part-1. When it is required to carry out the permeability test for a particular section of the soil strata above ground water table, bentonite slurry shall not be used while boring.

6.5.2 Pump-in-Test

Pump-in test shall be conducted in the bore hole/trial pit by allowing water to percolate into the soil. Choice of the method of testing shall depend on the soil permeability and prevailing ground water level.

Only clear water shall be used for conducting the test. Before conducting the test, the borehole shall be cleaned as specified in clause 6.1.1 (e). Water shall be allowed to percolate through the test section for sufficient period of time to saturate the soil before starting the observation.

a) Constant Head Method (In Bore Hole)

This test shall be conducted in boreholes where soil has a high permeability. Water shall be allowed into the borehole through a metering system ensuring gravity flow at constant head so as to maintain a steady water level in the borehole. A reference mark shall be made at a convenient level which can be easily seen in the casing pipe to note down the fluctuations of water level. The fluctuations shall be counteracted by varying the quantity of water flowing into the borehole. The elevation of water shall be observed at every 5 minute interval. When three consecutive readings show constant value, the necessary observations such as flow rate, elevation of water surface above test depth, diameter of casing pipe etc shall be made and recorded as per the proforma recommended in IS: 5529, Part-1, Appendix-A.

b) Falling Head Method (In Bore Hole)

This method shall be adopted for soils of low permeability and which can stand without casing. The test section shall be sealed at the bottom of the borehole and a packer at the top of the test section. If the test has to be conducted at an intermediate section of a pre-bored hole then double packers shall be used. Access to the test section through the packer shall be by means of a pipe which shall extend above the ground level. Water shall be filled into the pipe upto the level marked just below the top of the pipe and water be allowed to drain into the test section. The water level in the pipe shall be

recorded at regular intervals as mentioned in IS: 5529, Part-1, Appendix-B. The test shall be repeated till constant records of water level are achieved.

c) Percolation Test (In Trial Pit)

Percolation test shall be conducted in trial pit in areas where water/effluent is stored/discharged in ground level tanks. The loss of water due to percolation into the soil shall be estimated by the soil absorption capacity.

6.5.3 Pump-Out Test

This test shall be carried out at site to determine the co-efficient of permeability of soil below water table. This test shall be conducted by continuous pumping out of water from a well so as to maintain a steady water level at the desired depth in the well. The fluctuations in the water level shall be counteracted by varying the quantity of water pumped out of the well. The specification for the equipments & accessories required for performing the test, the procedure of testing, field observations and reporting of results shall conform to IS: 5529, Part-1. The well shall be of 400mm in diameter to be installed with a 250mm diameter perforated GI/MS pipe. Observation pipes of 50mm diameter shall be installed at regular intervals along three radial lines extending from the well at 120 degrees to each other. Length of these pipes shall depend upon the ground level, estimated depth of lowering the ground water and the distance from the well. Sufficient number of observation pipes shall be installed along each of the radial lines so as to assess the zones of influence due to dewatering. Draw down depth in the well shall be as specified in the drawing.

6.6 TRIAL PIT

6.6.1 Trial pits shall be of 3m x 3m size so as to permit easy access for visual examination of walls of the pit and to facilitate sampling and in-situ testing operations. Pits shall be excavated upto a maximum depth of 4m below ground level or as per the directions of the engineer-in-charge. Precautions shall be taken to ensure the stability of pit walls including provision of shoring if necessary as per IS:

4453. Precautions shall be taken to prevent surface water draining into the pit. Arrangements shall be made for dewatering if the pit is extended below water table. Trial pits shall be kept dry and a ladder shall be provided for easy access to the bottom of the pit. ln-situ tests shall be conducted and undisturbed samples shall be collected immediately on reaching the specified depth so as to avoid substantial changes in moisture content of the subsoil. Arrangements shall be made for barriers, protective measures and lighting necessary for the period the pits remain open.

6.6.2 A note on the visual examination of soil strata shall be prepared. This should include the nature, colour, consistency and visual classification of the soil, thickness of soil strata, thickness of expansive soil & ground water table if any etc.

6.6.3 Undisturbed samples shall be collected at 1m, 2m, 3m depth and at the termination depth in all the pits.

a) Chunk Samples

In cohesive soils, undisturbed samples of regular shapes shall be collected. The samples shall be cut and trimmed to a size of 0.3m x 0.3m x 0.3m. A square area of 0.35m x 0.35m shall be marked at the centre of the levelled surface at the bottom of the pit. Without disturbing the soil inside the marked area, the soil around this marking shall be carefully removed upto a depth of 0.35m. The four vertical faces of the soil block protruding at the centre shall be trimmed slowly so that its size reduces to 0.3m x 0.3m. Wax paper cut to suitable size shall be wrapped uniformly and covered with two layers of thin cloth over all the five exposed surfaces of the soil block and sealed properly using molten wax. A firmly constructed wooden box of size 0.35m x 0.35m x 0.35m (internal dimensions) with the top and bottom open shall be placed around the soil block and held such that its top edge protrudes just above the surface of the block. The space between the soil block and the box shall be filled uniformly and tightly with moist saw dust. The top surface shall also be covered with saw dust before nailing the wooden lid to cover the box firmly taking care that the soil block is not disturbed. The area of contact between the bottom portion of the block and the ground shall be reduced slowly by removing soil in small quantities using

small rods so that the block can be separated from the ground slowly without disturbance. After inverting the wooden box along with the soil block, the bottom portion shall be trimmed and covered with wax paper, cloth and to be sealed with molten wax. A wooden lid shall be nailed to the box after providing proper saw dust cushion below it. An arrow mark shall be made on the vertical face of the wooden box to indicate the top surface of the sample along with the location, date and depth of sampling.

b) Tube Samples

Undisturbed tube samples may also be obtained by means of 100mm diameter sampling tubes with a cutting edge. The sampler shall be slightly oiled or greased inside and outside to reduce friction. The sampler shall be pushed into the soil and while doing so soil around the tube shall be carefully removed. In case it is not possible to push the sampler it may be driven by light blows from a "monkey".

6.6.4 In case it is not possible to collect undisturbed samples in the pit, in-situ density of soil shall be determined by sand replacement method. The specification, equipments, accessories etc required for the test and the procedure of testing shall be in accordance with IS: 2720, Part-XXVIII. No separate payment shall be made for this test.

6.6.5 After the completion of the test, sampling and visual examination, the pit shall be suitably backfilled as directed by the engineer-in-charge. Unless otherwise specified excavated soil shall be used for this purpose.

6.7 Vane Shear Test

Field vane shear test shall be performed inside the borehole to determine the shear strength of cohesive soils, especially of soft and sensitive clays which are highly susceptible to sampling disturbance. This test shall be conducted by advancing a four winged vane of suitable size (75mm or 100mm diameter as per the soil condition) into the soil upto desired depth and measuring the torque required to rotate the vane. The specification for equipments & accessories required, the test procedure and field observations etc shall be as per IS: 4434. This test may also be conducted by direct penetration from

the ground surface. If the cuttings at the test depth in the bore hole show any presence of gravel, sand, shells, decomposed wood etc which are likely to influence the test results substantially, the test at that particular depth may be omitted with the permission of the engineer-in-charge. However the test shall be conducted at a depth where these obstructions cease to occur. On completion of the test the results shall be reported in an approved proforma as specified in IS: 4434, Appendix-A.

6.8 Static Cone Penetration Test

Static cone penetration test shall be conducted to know the soil stratification and to estimate the various physical and engineering properties of soil. The cone penetrometer shall be advanced by pushing and the static force required for unit penetration shall be determined. The test shall be conducted using a 200kN capacity mechanically operated equipment upto the specified depth or refusal whichever is earlier. For this test, 'refusal' means meeting a very hard strata which cannot be penetrated at the rate of at least 0.3cm/sec even when the equipment is loaded to its full capacity. The specification for the equipment and accessories required for performing the test, test procedure, field observation and reporting of results shall conform to IS : 4968, Part-III. At the ground level, preboring upto 0.5m depth shall be permitted if the overlying strata is very hard. No extra payment shall be made on account of this preboring. Continuous record of the penetration resistance shall be maintained.

6.9 Dynamic Cone Penetration Test

Dynamic cone penetration test shall be conducted using bentonite slurry by driving a standard size cone attached to the bottom of a string of drill rods. The test shall be conducted upto the specified depth or refusal whichever is earlier. Refusal shall be considered when the blow count exceeds 150 for 300mm penetration. The specification for the equipment and accessories required for performing the test, test procedure, field observations and reporting of results shall conform to IS:4968, Part-II. The driving system shall comprise of a 65 kg weight having a free fall of 0.75m. The cone

shall be of 65mm diameter provided with vents for continuous flow of bentonite slurry through the cone and rods in order to avoid friction between the rods and soil. On completion of the test, the results shall be presented as a continuous record of number of blows required for every 300mm penetration of the cone into the soil in a suitable chart supplemented by a graphical plot.

6.10 Plate Load Test

6.10.1 Plate load test shall be conducted to determine the bearing capacity and load/settlement characteristics of soil at shallow depth by loading a plane and levelled steel plate kept at the desired depth and measuring the settlement under different loads until a desired settlement takes place or failure occurs. The specification for equipment and accessories required for conducting the test, the test procedure, field observations and reporting of results etc shall conform to IS: 1888. The location and depth of the test shall be as given in the drawing or as indicated by the engineer-in-charge. Undisturbed tube samples as specified in clause 6.6.3 (b) shall be collected at 1m and 2.5m depths from the ground level for carrying out laboratory tests.

6.10.2 The size of pit shall not be less than five times the plate size and the depth shall be as specified. All provisions regarding excavation and visual examination of pit under clause 6.6.1 and 6.6.2 shall apply here also.

6.10.3 If the ground water table is at a depth higher than the specified test depth, the ground water table shall be lowered and maintained at the test depth for the entire duration of the test. Dewatering shall be at the cost of the contractor.

6.10.4 Unless otherwise specified the reaction method of loading shall be adopted. Settlement shall be recorded from dial gauges placed at four diametrically opposite ends of the test plate. The test plate shall be of 600mm x 600mm size and atleast 25mm thick. The bottom of the pit shall be levelled before placing the plate in position for conducting the test.

6.10.5 A seating load of 7kN/sqm shall be applied and after the dial gauge readings are stabilized, the load shall be released and the initial readings of the dial gauges be recorded after they indicate constant reading. The load shall be increased in stages. These stages shall be 20, 40, 70, 100, 150, 200, 250, 300, 400, 500, 600 and 800kN per sqm or as directed by the engineer-in-charge. Under each loading stage, record of 'time vs settlement' shall be kept as specified in IS:1888.

6.10.6 In case of cohesive soils, each load increment shall be maintained until the settlement is less than 0.02mm/minute or 6 hours whichever is later. Dial gauge readings for settlement shall generally be taken at 1, 2.25, 4, 6.25, 9, 16, 25, 60, 90 and 120 minutes from the start of each stage of loading. Thereafter the readings shall be taken at hourly interval upto a further 4 hours and at two hours interval thereafter for another 6 hours.

6.10.7 Other than cohesive soils (for all other type of soils), each stage loading shall be maintained for a minimum duration of one hour or till the settlement rate reduces to 0.02mm/minute whichever is later. No extrapolation of settlement rate from periods less than one hour shall be permitted. The final loading shall be maintained for 24 hours. During unloading, reading of dial gauge shall be recorded for each stage of unloading.

6.10.8 Loading shall be carried out in stages as specified above till one of the following conditions occur.

a) Failure of soil under the plate i.e. the settlement of the plate at constant load becomes progressive and reaches a value of 40 mm or more.

b) Load intensity of 800 kN/sqm is reached without failure of the soil.

6.10.9 Backfilling of the pit shall be carried out as per the directions of the engineer-in-charge. Unless otherwise specified the excavated soil shall be used for this purpose.

6.11 Cyclic Plate Load Test

This test shall be carried out to determine the dynamic soil properties required for the analysis of foundation subjected to dynamic loads. This test shall be conducted on similar lines as the ordinary plate load test with an addition that unloading shall also be done before each stage of loading. Test set up, load increment and maximum load intensity etc shall be as per Clause- 6.10.

6.11.1 After each stage of loading, the load shall be removed in a minimum of two stages and as directed by the engineer-in-charge. After each stage of reduction of load, dial gauge readings and settlements shall be taken for atleast one hour until the readings stabilize. Thereafter the next loading stage shall commence. Recording and analysis of test data shall be as per IS: 5249.

6.12 Field California Bearing Ratio Test

This test shall be carried out to obtain the properties of soil required for the design of roads. The equipments and accessories required for carrying out the test, test procedure, recording of observations and presentation of results shall conform to IS: 2720 part XXXI. The test locations and depth shall be as specified in the drawings or as directed by the engineer-in-charge.

6.13 Electrical Resistivity Test

This test shall be conducted to determine the electrical resistivity of soil required for designing safety grounding system for the entire power plant area. The specification for the equipments and other accessories required for performing the test, test procedure and reporting of field observations shall conform to IS:3043. The test shall be conducted using Wenner's four electrode method as specified in IS:1892, Appendix-B2. Unless otherwise specified, at each test location the test shall be conducted along two perpendicular lines parallel to the co-ordinate axes. On each line, the spacing of electrodes shall be kept at 1m, 2m, 5m and 10m. Testing shall be done during the driest season prevalent in the area to the extent possible. In no circumstances shall the testing be done during or

immediately after the rainy season or persistent rains or in the vicinity of any existing water body such as ponds, streams etc.

6.14 Seismic Refraction Test

6.14.1 This test shall be carried out to establish the rock and soil profiles of varying density. The dynamic shear modulus of the soil shall also be obtained from the results of this test. The specification for the equipments and other accessories, procedure for carrying out the test, recording and analysis of results and their presentation shall conform to IS: 1892.

6.14. 2 This test shall be carried out by inducing shock waves into the soil by striking a plate placed on the ground surface with a hammer. The shock waves shall be picked up through geophones placed on the ground surface at regular intervals in line with the plate along a straight line. The time elapsed before the waves reach the geophones shall be recorded to an accuracy of one millisecond or better.

6.14.3 The distance between the shock point and the geophones shall be increased to cover a wider area. Alternatively, multiple geophones shall be used simultaneously using multiple channel seismograph to record the arrival time and intensity of waves reaching the geophones. The spacing of geophones shall be 5m. As the distance between geophones and the shock producing point are increased, the time lapse for the waves passing through different underlying strata and reaching the geophone shall be recorded. The wave forms shall be recorded for each test using multiple channel seismograph.

6.14.4 The test shall be conducted along traverses in two orthogonal directions as specified in the drawing or as directed by the engineer-in-charge. During testing, proper care shall be taken to avoid disturbance caused due to the movement of vehicles or other working operations around the test location. The type of wave (compression or shear) shall be analysed properly using the data recorded during the test.

6.15 Cross Hole Shear Test

This test shall be generally carried out in accordance with IS: 13372 to establish the dynamic elastic properties of soil and rock. In this test, the seismic waves are to be picked up in two adjacent receiver boreholes. The spacing of boreholes shall be determined so as to obtain good results. The boreholes shall be uncased in the portion carrying the geophones. However it should be kept filled with water or drilling mud in order to ensure perfect contact between the borehole wall and the geophone. In case of cased hole preferably a low velocity material such as a high impact PVC should be used for casing and it is essential that it should be well grouted behind in order to make an intimate contact with the soil. The charge shall be installed within the depth as specified and the waves shall be picked up from the geophones installed at required depths in receiver boreholes. Knowing the travel time from shot hole to receiver hole and corresponding distance, the velocity of the waves is determined which enables to estimate dynamic elastic modulus, shear modulus and Poisson's ratio. In each receiver borehole multiple geophones shall be provided at 2m interval (with starting depth as 3m below ground level) to cover the depth and various strata as specified. Intensity of the waves shall be recorded by multiple channel seismograph.

6.16 Pressuremeter Test

6.16.1 This test shall be conducted in bore holes at desired depth to obtain the in-situ stress-strain characteristics and strength parameters of soil/rock layer by measuring the deformation of the probe at different pressures of the volumemeter. The location and depth of the test shall be as given in the drawing or as per the directions of the engineer-in-charge.

6.16.2 All precautions shall be taken to ensure a smooth bore hole of required diameter with minimum disturbance to the surrounding soil. In soft, loose and sensitive soils, the bore hole shall be predrilled deeper than the testing depth for enough so that the cuttings settling at the bottom of the bore hole shall not interfere with the test.

6.16.3 The equipment shall be calibrated for pressure losses (membrane correction/air calibration) and volume or radius changes (line calibration/thick wall rigid steel cylinder test) before starting of test and at regular intervals as per the manufacturer's specification.

6.16.4 Maximum value of pressure correction shall not be more than 50% of limit pressure. The total volume loses in the system shall not exceed 0.5% of the static probe volume per 100kPa. Volume correction may he neglected in soil if it is less than 0.1% of probe volume per 100 kPa.

6.16.5 The test shall be performed by expanding a cylindrical probe to obtain a pressure vs volume or pressure vs radius curve as specified in IS:1892. The probe may be of Ax, Bx or Nx size. However the size of the borehole shall be compatible to the size of pressuremeter probe. Hose pipe connecting the probe with the surface unit shall be of flexible tubing of single or coaxial type. The equipment should be able to reach a maximum pressure of 5000kPa for testing in soil and 8000kPa for testing in rock. The accuracy of measuring device shall be such that a change of 0.2% of static probe volume or 0.1% of probe radius is measurable as specified in IS:1892.

6.16.6 The probe shall be lowered down to the required depth as soon as the boring is completed so as to limit the expansion of soil due to release of stresses. The probe shall be held by a clamping device ensuring that it is not located at the interface of two different soil/rock layers.

6.16.7 The pressure shall be increased in atleast 20 equal stages as directed by the engineer-in-charge. At each stage the pressure shall be maintained for a period of atleast 60 seconds and volume reading shall be taken for 7 to 14 minutes. The volume of water sent into the probe during this period shall be measured upto an accuracy of 0.01cum. In case the water level in the volumemeter drops rapidly, it is necessary to close the volumemeter valve quickly so that the reservoir does not empty and allow air or gas into the tubing.

6.16.8 The test shall be carried out in stages till one of the following conditions occur.

a) The volume of the probe is doubled
b) Ultimate failure of soil/rock occurs
c) Load intensity of 5000kPa for soil and 8000kPa for rock is reached without failure.

6.16.9 If the shape of uncorrected pressure vs volume curve drastically varies from the ideal test curve, the test shall be repeated at no extra cost to the owner/BHEL at a different depth as decided by the engineer-in-charge.

6.16.9 On completion of the test, all results mentioned in Clause- 9.2 shall be reported.

7.0 FIELD INVESTIGATION - ROCK

7.1 Rock Drilling

Drilling in rock shall be done at specified locations or as per the directions of the engineer-in-charge. Before commencing drilling, it shall be proved that characteristics of rock has been met with as mentioned in clause 6.1.1(b). The starting depth of drilling in rock as mentioned in clause 6.1.1(b) shall be certified by the engineer-in-charge. The portion drilled in rock shall be backfilled with 1part of cement : 3 part of sand (1:3) grout unless otherwise specified and as directed by the engineer-in-charge.

7.1.1 Equipment

a) Core drilling shall be done by rotary motion using diamond bit. The feed or thrust to the drilling bit shall be actuated by hydraulic system. The rotary core drilling equipment and procedure for drilling shall conform to IS: 6926. The equipment shall be provided with necessary facilities to regulate the spindle speed, bit pressure and water pressure during core drilling to get a good core recovery.

b) Drilling shall be carried out with Nx size diamond tipped drill bits or impregnated diamond bits depending on the type of rock encountered. Double tube swivel core barrel of Type B conforming to IS: 6926 shall be used to ensure a good core recovery and to pick

up cores from all layers of rock. Suitable core catchers shall be used to ensure continuous and good core recovery.

7.1.2 Procedure

a) The drilling fluid shall be clean water. Circulation of drilling fluid shall be started before the core barrel reaches the bottom of the hole to prevent cuttings or sludge from entering the core barrel at the start of coring. Drilling fluid shall be circulated continuously down the hollow rods and the sludge conveying the rock cuttings to the surface shall be collected.

b) When drilling through soft/weathered/fractured rock, water circulation must be reduced so as to avoid shattering/breaking of core.

c) The rotational speed of the bit (spindle speed), the amount of downward pressure applied on the bit (bit pressure) and water pressure shall be suitably adjusted and properly monitored so that the core is collected with least disturbance and to avoid shearing of the core from its base. Bit speed, bit pressure, water pressure for the type of bit for various rock types shall be as per Appendix A of IS:6926.

d) No drill run shall exceed 0.75m in length. This can be increased to 1.5m provided the core recovery observed is more than 80% in two successive 0.75m drill runs and on approval from the engineer-in-charge. If the core recovery is less than 20% then SPT shall be performed before commencing the next drill run as explained in Clause- 6.2.

e) If at any time blocking of the bit or grinding of the core is observed, the core barrel shall be immediately withdrawn from the borehole regardless of the length of drill run completed.

7.1.3 Observations

a) The colour of return water at regular intervals, the depth at which any change of colour of return water is observed, the depth of

occurrence and amount of flow of hot water if encountered shall be recorded.

b) The depths through which a uniform rate of penetration was maintained, the depth at which a marked change in rate of penetration or sudden fall of drill rod occurs, the depth at which any blockage of drill bit causing core loss if any etc shall be recorded.

c) Any heavy vibration or torque noticed during drilling should be recorded together with the depth of occurrence.

d) Special conditions like the depth at which grouting was done during drilling, presence of artesian conditions, loss of drilling fluid, observation of gas discharge with return water etc shall also be observed and recorded.

e) During drilling operation, observation on return water, rate of penetration etc shall be recorded in a proforma as given in IS: 5313, Appendix-A.

7.1.4 Core Samples

a) Core samples shall be extracted by the application of a continuous pressure at one end of the core with the barrel held horizontally without vibration. Friable cores shall be extracted from the barrel directly into a suitable sized half round plastic channel section. Care shall be taken to maintain the direction of extrusion of sample same as that while coring to avoid stress reversal.

b) Immediately after withdrawal from the core barrel, the cores shall be placed in a tray and transferred into boxes specially prepared for the purpose. The boxes shall be made from seasoned timber or any other durable material and shall be indexed on top of the lid as per IS:4078. The cores shall be numbered serially and arranged in the boxes in a sequential order. The description of the core samples shall be recorded as per IS: 4464. Where no core is recovered, it shall be recorded as specified in the continuous record of core recovery and RQD in the corelog as per IS:11315, Part-II.

c) The basic information for the description of rocks shall cover i) degree of weathering ii) discontinuity spacing iii) strength iv) colour v) grain size vi) structural condition, the mineralogy of the grains and cementing material vii) rock name, special features like major joint planes, features/laminations, faults etc.

7.2 Standard Penetration Test

The relevant hardness of rocks shall be tested in boreholes after every drill run of 0.75m in rock if core recovery observed is less than 20% or as directed by the engineer-in-charge. The testing equipment and arrangement shall be conforming to IS: 2131. The number of blows for each 75mm penetration to a total penetration of 450mm shall be recorded. Penetration for every 50 blows shall be recorded and the test shall be stopped at a total of 100 blows.

7.3 Plate Load Test

The test shall be conducted as described under Clause- 6.10 for soil subject to the following changes.

The test plate shall be of size 45cm x 45cm and at least 25mm thick. The maximum load shall be 1500 kN/sqm to be applied in stages of 25, 50, 100,150,200, 300, 400, 600, 800, 1000, 1200, 1400 and 1500 kN per sqm. Under each load the time Vs settlement shall be recorded and plotted.

7.4 Pressuremeter Test

This test shall be conducted as described under Clause- 6.16 for soil subject to the following changes. The test shall be carried out till one of the following condition occurs.

a) The volume of the probe is doubled
b) Ultimate failure of rock
c) Load intensity of 8000 kN/sqm is reached without failure.

7.5 Cross Hole Shear Test

This test shall be conducted as described under Clause- 6.15 for soil.

7.6 Permeability Test

Permeability test shall be conducted in bed rock inside the bore hole by pumping in water under pressure to determine the percolation capacity of the rock strata. This test shall be conducted in uncased and ungrouted sections of the drill hole. Clear and clean water shall be used for the purpose of both drilling and testing. The specification for the equipments and other accessories, test procedure etc shall conform to IS: 5529, Part-II. The length of the test section shall be either 1.5m or 3m as per field conditions and as per the directions of the engineer-in-charge. The level of water table (if any) in the bore hole shall be recorded and the drill hole shall be cleaned before the start of the test. Depending upon the depth of the test section, single or double packer method shall be adopted. Care shall be taken to maintain water tightness of all the joints and connections during testing.

a) Single Packer method

This method shall be adopted when the bottom elevation of the test section is the same as the bottom of the drill hole. The packer shall be fixed at the top level of test section such that only the test section lies below the packer. Water shall then be pumped through a pipe into the test section under a required pressure and maintaining it till a constant quantity of water intake is observed. The amount of water percolating through the hole shall be recorded at every 5 minute interval. The test shall be repeated by increasing the pressure at regular intervals upto a pressure limit as specified in IS: 5529, Part-II. The details and observations shall be recorded in a proforma as recommended in IS: 5529, Part-II, Appendix-B.

b) Double Packer method

This method shall be adopted when the permeability of an isolated section inside a drill hole is to be determined. Packers shall be fixed both at the top and bottom of the test section such that their spacing is exactly equal to the length of the test section. The test shall then be conducted as specified in Clause- 7.6(a).

8.0 LABORATORY INVESTIGATION

8.1 Essential Requirements

a) All laboratory tests shall be conducted in an approved laboratory using approved apparatus complying with the requirements and specifications of Indian standards or other approved standards for this class of work. It shall be checked that the apparatus are in good working condition before starting the laboratory tests. Calibration of all the instruments and their accessories shall be done carefully and precisely.

b) Depending on the type of sub strata encountered, appropriate laboratory tests shall be conducted on soil and rock samples collected in the field. Laboratory tests shall be scheduled and performed by a qualified and experienced personnel who are thoroughly conversant with the work. Tests indicated in the schedule of items shall be performed on soil, rock and water samples as per relevant IS codes. One copy of all the laboratory test data records shall be submitted to the owner progressively every week. Laboratory tests shall be carried out concurrently with field investigation since initial laboratory test results could be useful in planning the later part of field work. **A schedule of laboratory tests shall be established by the contractor and the same shall be submitted and got approved by the engineer-in-charge before starting of laboratory tests.**

c) All samples whether undisturbed or disturbed shall be extracted, prepared and examined by a competent personnel properly trained and experienced in soil sampling, examination, testing and in using the apparatus as per the specified standards.

d) Undisturbed soil samples retained in liners or seamless tube samplers shall be taken out without causing any disturbance to the samples using suitably designed extruder just prior to actual testing. If the extruder is horizontal, proper support shall be provided to prevent the sample from breaking. For screw type extruders the pushing head shall be free from the screw shaft so that no torque is applied to the soil sample in contact with the pushing head. For soft clay samples, the sample tube shall be cut by means of a high speed

hacksaw to specified test length and placed over the mould before pushing the sample into it with a suitable piston.

e) While extracting a sample from a liner or tube care shall be taken to see that its direction of movement is the same as that during sampling to avoid stress reversal.

f) On all undisturbed soil samples tested for bulk density, water content, grain size distribution, liquid limit and plastic limit tests shall also be performed.

g) On all rock samples tested for unconfined compression test, bulk density and water content tests shall also be performed.

h) After completion of all tests, a summary of test results for each soil and rock sample shall be presented in a proforma as enclosed in **Annexure-A & B** respectively. Chemical test results on soil and water samples shall be furnished in a tabular form separately.

8.2 Tests

Tests as indicated in this specification and as called for by the engineer-in-charge shall be conducted. The tests shall include the following.

a) Tests on Undisturbed and Disturbed Soil Samples

- Visual and engineering classification
- Sieve analysis and hydrometer analysis
- Liquid, plastic and shrinkage limits
- Specific gravity
- Chemical analysis
- Swell pressure and free swell index determination
- Proctor compaction
- California bearing ratio

b) Test on Undisturbed Soil Samples

- Bulk density and moisture content

- Relative density (for sand)

- Unconfined compression test

- Box shear test

- Triaxial shear tests (depending on the type of soil and field conditions on undisturbed or remoulded samples)

  i)Unconsolidated undrained

  ii) Consolidated undrained test with the measurement of pore water pressure

  iii)Consolidated drained

- One dimensional consolidation test

c) Test on Rock Samples

- Visual classification

- Water absorption, porosity and density

- Specific gravity

- Hardness

- Slake durability

- Unconfined compression test (both at saturated and at in-situ water content)

- Point load strength index

- Deformability test (both on saturated and dry samples)

c) Chemical Analysis of Sub-soil and Ground Water

8.3 Salient Test Requirements

a) Remoulded soil specimen whenever desired shall be fully reworked at field density and natural moisture content. For conducting CBR test and triaxial test for dyke/road material the sample shall be remoulded to 95% of standard proctor density.

b)Triaxial shear test shall be conducted on undisturbed soil samples saturated by the application of backpressure. Only if the water table is at sufficient depth such that chances of its rising to the base of the footing are meagre or nil, the triaxial tests shall be performed on the specimens at natural moisture content. Each test shall be carried out on a set of three test specimens from one sample at cell pressures equal to 100, 200 and 300kN/sqm or as required depending on the soil conditions.

c) Effective stress triaxial shear test shall be consolidated undrained with pore water pressure measurement. The test shall be conducted at cell pressures of 100, 200 and 300kN/sqm ensuring complete consolidation at each stage.

d) Direct shear test shall be conducted on undisturbed soil samples. The three normal vertical stresses for each test shall be 100, 200 and 300 kN/sqm or as required depending on the soil conditions.

e) Consolidation test shall have loading stages of 10, 25, 50, 75, 100, 200, 400 and 800 kN/sqm. Rebound curve shall be recorded for all the samples by unloading the specimen at the in-situ stress of the specimen. Additional rebound curves shall also be recorded whenever desired by the engineer-in-charge.

f) Chemical analysis of sub-soil shall include determination of pH value, carbonate, sulphate (both SO_3 and SO_4), chloride and nitrate contents, organic matter, salinity and any other chemicals harmful to the foundation material. The contents in soil shall be indicated as percentage.

g) Chemical analysis of sub-soil water sample shall include the determination of the properties such as colour, odour, turbidity, pH value and chemical contents such as carbonate, sulphate (both SO_3 and SO_4), chloride, nitrate, organic matter and any other chemicals harmful to the foundation material. The contents such as sulphate etc shall be indicated as ppm by weight.

h) The laboratory CBR test shall be performed on undisturbed or on remoulded sample as per the drawing or as directed by the engineer-in-charge in soaked and unsoaked conditions.

9.0 REPORT

9.1 General

a) On completion of all the field and laboratory works, the contractor shall submit a draft report containing geological information of the region, procedure adopted for investigation, field observations, summarised test data, conclusion and recommendations. The report shall include detailed borelogs, sub-soil sections, field test results, laboratory observations and test results in both tabular as well as graphical forms, practical and theoretical considerations for the interpretation of test results, the supporting calculations for the conclusions drawn etc. Initially, the contractor shall submit three copies of the report in draft form for the owner/BHEL's review.

b) After review of the draft report, the employer’s comments will be intimated to the contractor. The contractor shall incorporate the comments and after getting the amended draft report approved, five copies of the detailed final report shall be submitted alongwith one set of reproducible of the graphs, tables etc. Any expenditure on account of redrafting, finalising the report etc shall be deemed to have been included in the quoted rates.

c) The detailed final report based on field observations, in-situ and laboratory tests shall encompass theoretical as well as practical considerations for foundation of different type of structures envisaged in the area under investigation. The contractor shall acquaint himself about the type of structures, foundation loads and other information required from the engineer-in-charge.

9.2 Data to be Furnished

The report shall also include but not be limited to the following.

a) A Plot Plan/Geotechnical Investigation Layout showing the location and reduced levels of all field tests e.g. bore holes, trial pits, plate load tests etc properly drawn to scale and dimensioned with reference to the established grid lines.

b) Geological information of the area such as geomorphology, geological structure, lithology, stratigraphy and tectonic faults, seismicity of the region and site, core recovery and rock quality designation etc.

c) Past observations and historical data if available for the area or for other areas with similar soil profile for similar structures in the surrounding areas.

d) A true cross section of all individual boreholes and trial pits with reduced levels and co-ordinates showing the classification and thickness of individual stratum, position of ground water table, various in-situ tests conducted and samples collected at different depths and the rock stratum if met with.

e) A set of longitudinal and transverse soil/rock profiles connecting various bore holes in order to give a clear picture of the variation of the subsoil strata as per IS: 6065.

f) Water level contours and rock level contours

g) Plot of standard penetration test 'N' values (both uncorrected and corrected) with depth for identified areas.

h) Results of all field tests in tabular as well as in graphical forms.

i) Results of all laboratory tests summarised (i) for each sample as well as (ii) a consolidated table giving the layer-wise soil and rock properties . All the relevant charts, tables, graphs, figures, supporting

calculations, conclusions and photographs of representative rock cores and trial pits shall be furnished.

j) For all triaxial shear tests, stress vs strain diagrams as well as Mohr's circle envelopes shall be furnished. If back pressure is applied for saturation, the magnitude of the same shall be indicated. The value of modulus of elasticity 'E' shall be furnished for all tests along with relevant calculations.

k) For all consolidation tests the following curves shall be furnished.

e vs log P
e vs P and
Compression vs log t or square root of t (depending upon shape of the plot for proper determination of coefficient of consolidation)

The point showing initial condition (eo, Po) of the soil shall be marked on the curves.

l) Values of compression index, coefficient of volume compressibility etc shall be furnished. The procedure adopted for calculating the compression index from the field curve and settlement of soil strata shall be clearly specified. The time required for 50% and 90% primary consolidation along with secondary settlement if significant shall also be calculated.

m) For pressuremeter tests, the following shall be furnished.

Calibration record including description of membrane and sheath on probes, dimensions of thick walled cylinder, length of flexible tubing, calibration curves and temperature etc.

Drilling record including borehole number, method of making borehole, log with soil type and condition, depth of water table in the borehole, weather and temperature etc.

Test record including type of test, date and time, depth of centre point of probe, volume readings at 30 and 60 second elapsed time and corresponding pressure readings and notes on any deviation from standard test procedure etc.

Field pressuremeter, creep and air calibration curves indicating Po, Pf and Pl. Corrected pressuremeter and creep curves indicating Po, Pf, Pl along with calculation for the corrections.

n) Values of cohesion, angle of internal friction, pressuremeter modulus, shear modulus and co-efficient of sub-grade reaction along with sample calculations. Calculation for allowable bearing pressures and corresponding total settlements for shallow foundations and load carrying capacity calculation of piles in various modes etc.

o) Analysis and discussion of test results.

9.3 Recommendations

Recommendations shall be given areawise duly considering the type of soil/rock, structure, foundation type and ground water table etc in the area. The recommendations shall include but not be limited to the following.

a) Type of foundation to be adopted for various structures duly considering the sub strata characteristics, water table, total settlement permissible for the structures and equipments, minimum depth and width of foundation etc.

b) For shallow foundations the following shall be furnished with comprehensive supporting calculations.

i) Net safe bearing pressure for isolated square/rectangular footings and continuous strip footings of sizes 1, 2, 3, 4 & 5m at different founding depths of 1, 2, 3, 4 & 5m below ground level considering both shear failure and settlement criteria giving reasons for the type of shear failure adopted in the calculation.

ii) Net safe bearing pressure for raft foundation of widths greater than 6m at 2 , 3, 4 & 5m below ground level considering both shear failure and settlement criteria.

iii) Modulus of sub-grade reaction and modulus of elasticity from plate load test results along with time-settlement curves and load-settlement curves in both natural and log-log graph.

c) If piling is envisaged the following shall be furnished with comprehensive supporting calculations.

i) Type of pile and reasons for recommending the same duly considering the sub strata characteristics.

ii) Suitable founding strata for the pile.

iii) Estimated length of pile for 800kN (450mm dia.), 1050kN (500mm dia.), 1500kN (600mm dia.) and 4500kN (1070mm dia.) capacities. End bearing and frictional resistance shall be indicated separately. Safe lateral and tensile load carrying capacities of pile with supporting calculations.

iv) Magnitude of negative skin friction if any.

d) Coefficient of permeability of various sub-soil and rock strata based on in-situ permeability tests.

e) Cone resistance, frictional resistance, total resistance and settlement analysis for different size of foundations.

f) Electrical resistivity of sub-soil based on electrical resistivity tests including electrode spacing vs cumulative resistivity curves.

g) Dynamic soil properties such as dynamic shear modulus and Poisson's ratio etc from cross-hole shear and seismic refraction tests and coefficient of elastic uniform compression from cyclic plate load tests.

h) Suitability of the soil for construction of roads and embankments, their stable slopes for shallow and deep excavations, active and passive earth pressures, earth pressure at rest and modulus of elasticity as a function of depths for the design of underground structures etc.

i) Suitability of locally available soils at site for filling and back filling purposes.

j) If expansive soil is met with, then recommendation on removal or retainment of the same under the structures/roads etc shall be given. In the latter case, detailed specifications of any special treatment required including specification for materials to be used, construction method, equipments to be deployed etc shall be furnished.

k) Protective measures based on chemical nature of soil and ground water with due regard to the potential deleterious effects on concrete, steel and other building materials etc. Remedial measures for sulphate attack and acidity shall be dealt in detail.

l) Susceptibility of sub soil strata to liquefaction in the event of earthquake. If so, recommendation for remedial measures.

m) Identification of any other potential geotechnical problems and their remedial measures.

n) Description of measures required for erosion control.

o) Identification of corrective measures required for the improvement of sub surface conditions such as removal of poor sub soil/material and in-situ densification etc. If ground improvement is recommended then its detailed specification, specification for the materials to be used, construction method, equipments to be deployed etc shall be furnished.

10.0 RATES & MEASUREMENTS

10.1 RATES

a) The item of work in the schedule of quantities describes the work very briefly. The various items of the schedule of quantities shall be read in conjunction with the corresponding sections in the technical specification including amendments and additions if any. For each item in the schedule of quantities, the bidder's rates shall include all the activities covered in the description of the items as well as for

all necessary operations in details described in the technical specification.

b) No claims shall be entertained if the details shown on the released for construction drawings differ in any way (e.g. location and depth of tests, number of tests etc) from those shown on the tender drawings.

c) The unit rates quoted shall include minor details which are obviously and fairly intended and which may not have been included in these documents but are essential for the satisfactory completion of the work.

d) The bidders quoted rates shall be inclusive of providing all equipments, men, materials, skilled and unskilled labours, making observations, establishing the ground level and coordinates at location of each bore hole, test pit etc by carrying levels from one established bench mark and distances from one set of grid lines furnished by the engineer-in-charge. Also no extra payments shall be made for conducting the standard penetration tests, collection, packing and transportation of all the samples and cores, recording of all results and submitting them in approved formats etc.

e) The quoted rates for trial pits/plate load tests/ cyclic plate load tests shall be inclusive of dewatering and backfilling etc.

f) The quoted rates for drilling in rock shall satisfy the requirements as furnished in specification.

g) The rates quoted for conducting pump out test shall be inclusive of boring a well of 400mm diameter, providing and installation of perforated GI/MS pipes and observation pipes etc .

h)The rates quoted for conducting cross hole shear test shall be inclusive of necessary boring, providing PVC pipes, grouting, geo-phones, backfilling the holes after completion of testing etc.

i)The rates quoted for laboratory tests shall include preparation of samples, performing tests, recording, analysis and submission of data etc.

j) The bidder shall submit a scheme showing the arrangement and equipment proposed to be used for conducting the site work along with rates. However the minimum number of staff and equipments to be deployed/mobilised for site works shall be as per **Annexure-C & D** respectively.

10.2 MEASUREMENTS

a) All measurements shall be in SI Units.

b) Length shall be measured in metres (m) correct to two places of decimals. Areas shall be worked out in square meters(Sqm) and volume in cubic meters(Cum) rounded off to two decimals.

c) Certain tests have to be conducted in the bore holes and trial pits etc. Such bore holes and trails pits etc shall be measured once only and not again just because the tests are conducted therein.

d) The depth of penetration due to SPT at the bottom of bore hole shall not be considered for the measurement of bore hole depth.

e) Pits shall be measured in Cum.

f) Coring in rock with diamond bit shall be measured in length(metre) correct to two places of decimal for the actual cored length satisfying the criteria of specification.

	STANDARD SPECIFICATION FOR GEOTECHNICAL INVESTIGATION	SPEC. NO. PE-TS-999-603-002
		VOLUME II
		SECTION D
		REV. NO. 0 DATE 11.06.2009
		SHEET 47 OF 50

ANNEXURE - A SUMMARY OF LABORATORY TEST RESULTS ON SOIL SAMPLES

			DENSITY (kN/Cum)			PARTICLE SIZE (%)				ATTERBERG'S LIMITS				SOIL			STRENGTH TEST			CONSOLIDATION TEST						SWELL TEST		COMPACTION TEST					
BORE HOLE/ TRIAL PIT NO.	DEPTH (m)	TYPE OF SAMPLE	BULK	DRY	WATER CONTENT (%)	GRAVEL	SAND	SILT	CLAY	LL	PL	PI	SL	IS CLASSIFICATION	DESCRIPTION	SPECIFIC GRAVITY	TYPE	C	Φ	e_o	Pc	Cc	p	m_v	Cv	S.Pr	FSI	MDD	OMC	CBR	RELATIVE DENSITY	PERMEABILITY(m/hr)	REMARKS

For type of sample

DS	Disturbed soil sample
UDS	Undisturbed soil sample
RMS	Remoulded soil sample
WS	Water sample

For strength test

UCC	Unconfined compression test
VST	Vane shear test
Tuu	Unconsolidated undrained triaxial test
Tcu	Consolidated Undrained Triaxial test with pore pressure
Tcd	Consolidated drained triaxial test

(Note: Replace T by D for Direct Shear test)

For others tests

LL	Liquid Limit (%)
PL	Plastic Limit (%)
PI	Plasticity Index (%)
SL	Shrinkage limit (%)
C	Cohesion (kN/Sq.m)
φ	Angle of internal friction (degrees)
S.Pr	Swelling pressure (kN/Sq.m)
FSI	Free swell index (%)
e_o	Initial Void ratio
Pc	Preconsolidation pressure (kN/Sq.m)
Cc	Compression index
p	Pressure range (kN/Sq.m)
m_v	Coefficient of volume compressibility (Sq.m/kN)
Cv	Coefficient of consolidation (Sq.m/hr)
MDD	Maximum Dry Density (kN/Cum)
OMC	Optimum moisture content (%)
CBR	California Bearing Ratio (%)

ANNEXURE-B

SUMMARY OF LABORATORY TEST RESULTS ON ROCK CORE SAMPLES

BORE HOLE NO.	
DEPTH	
CORE PIECE NO.	
MOISTURE CONTENT	
SPECIFIC GRAVITY	
HARDNESS	
POROSITY DRY	
DENSITY SLAKE	
DURABILITY	
POINT LOAD STRENGTH INDEX	
DEFORMABILITY (DRY /SATURATED)	
UNCONFINED COMPRESSIVE STRENGTH (INSITU/SATURATED)	
CORE DESCRIPTION	
REMARKS	

ANNEXURE-C

MINIMUM STAFF TO BE DEPLOYED

S.No.	Description	No. of persons
1.	Geotechnical Engineer	To be required considering the project schedule and actual scope of work.
2.	Engineering Geologist	
3.	Supervisor	
4.	Qualified Surveyor	
5.	Rig Operators	
6.	Mechanic	

ANNEXURE-D

LIST OF EQUIPMENTS TO BE MOBILISED TO SITE (MINIMUM)

S.No.	Description	Quantity
1	Shell and auger boring set	To be required considering the project schedule and actual scope of work.
2.	Rotary core drilling unit	
3.	Diamond bit drill	
4.	Dynamic cone penetration test equipment	
5.	Menard pressure meter or equivalent set up with limit pressure of 80kg/sq.cm.	

Note:

Additional equipments shall be mobilized if required as per the directions of the engineer-in-charge to match the work schedule.

1X250 MW NSPCL ROURKELA TPP-III

TECHNICAL SPECIFICATION FOR TOPOGRAPHICAL SURVEY

SPECIFICATION NO PE-DC-K26-601-C001

VOL - II

PROJECT ENGINEERING MANAGEMENT
POWER PROJECT ENGINEERING INSTITUTE,
HRD & ESI COMPLEX,
PLOT NO.: 25, SECTOR-16A,
NODIA, - 201 301, (UP)

STANDARD SPECIFICATION FOR TOPOGRAPHICAL SURVEY

1.0 GENERAL

1.1 This specification covers the technical requirements for carrying out **"Topographical Survey and Allied Works"** for the entire area/areas indicated for locating the power plant and its other systems. The work shall be executed in accordance with the specification and good standard of practice necessary to fulfil the objectives of the survey work strictly in accordance with the instruction and satisfaction of the engineer-in-charge.

2.0 SCOPE

2.1 The scope of work includes the following.

2.1.1 Carrying out topographical survey and preparation of plans (maps) and report of the entire area/areas indicated for locating the power plant and its other systems.

2.1.2 Carrying out bench mark (GTS / any other reference bench mark approved by the engineer-in-charge) to site/sites under survey by parallel levelling, establishing and constructing bench mark, grid and reference pillars in the field.

2.1.3 Spot level survey of the entire area/areas at specified intervals and development of contours.

2.1.4 Carrying out cross-section of canal/nallah as specified in the schedule of quantities by taking spot levels at 5m interval or less depending upon the site conditions and instructions of the engineer-in-charge.

2.1.5 Providing survey instruments, construction equipments, tools & plants, materials, labours, qualified surveyors, clearance of jungles, cutting of trees, earth work, scaffoldings, transport, supervision by competent engineers/surveyors, testing of materials, full insurance and all other incidental items as may be necessary for successful completion of the surveying , mapping and construction works etc.

2.1.6 Furnishing all field data and drawings on floppies apart from hard copies.

2.1.7 Furnishing survey report as described in details in the succeeding paragraphs is also included in the scope of work.

3.0 TENDER DRAWING

3.1 The enclosed Topographical Survey & Geotechnical Investigation Location Map for Ash Dyke-E (**DYKE-E Location Google Map**) indicate the tentative location of the area/areas to be surveyed for locating the project. The location/area(s) indicated in the drawing is subject to change that may be necessary during actual execution of the work. The work shall be carried out as per the instructions of the engineer-in-charge.

3.2 The bidder must visit the site prior to submitting his quotations to acquaint himself fully with the nature, type, scope of work and involvement therein. The rates quoted shall remain firm during the entire period of execution till completion of the work and any additional claim for lack of knowledge shall not be entertained.

4.0 SPECIFICATION

4.1 The work shall be executed according to the specification and good standard of practice necessary to fulfil the objectives of the survey work strictly in accordance with the instruction and satisfaction of the engineer-in-charge.

4.2 The specification shall be read in conjunction with the description of items in the schedule of quantities. The bidder shall refer to the employer for any discrepancy which may exist between the drawings, specification and corresponding items of the schedule for clarification before submission of quotation and the employer's decision as to the clarity of the point raised shall be final and binding on the bidder.

4.3 The work at site shall be carried out under the full time supervision by a qualified engineer or a senior surveyor. The engineer or senior surveyor shall be responsible for and capable of co-ordinating the work of the surveying teams, setting out the work accurately, identifying immediately and positively the type of instruments to be deployed and the

methodology of surveying to achieve speed and accuracy in the work and shall be fully conversant with the theory and techniques of traversing, triangulation, spot levelling survey work etc covered by this contract.

4.4 The contractor shall be responsible for the proper execution of the work to such lines and grades as specified in the specification, drawings or as directed by the engineer-in-charge from time to time.

4.5 After arrival of the instruments to site, these shall not be moved out of the site by the contractor without the prior written permission and approval of the engineer-in-charge. In case the instruments are moved out of the site without the prior written permission and approval, the engineer-in-charge/owner reserves the right to deduct from the contractor's bill(s) the amount as considered reasonable and or to withheld the payments for the work done. The decision of the engineer-in-charge in this regard shall be final and binding on the contractor.

5.0 CARRYING OUT AND SETTING UP OF BENCH MARK & REFERENCE PILLARS

5.1 The contractor shall carry out bench mark by fly-levelling from the nearest GTS bench mark or available source as approved by the engineer-in-charge and establish the same on a permanent bench mark to be constructed as per **Fig.1** at a convenient location(s) at site as per the instructions of the engineer-in-charge. All subsequent transfer of levels shall be carried out with respect to this bench mark.

5.2 The work shall also include constructing permanent reference pillars as per **Fig.2** at suitable locations as approved by the engineer-in-charge. These reference pillars shall be labelled permanently with their respective co-ordinates and reduced levels for future use. The bench mark and reference pillars shall be shown on the survey drawings.

5.3 The fly levelling should be carried out using two good quality levels simultaneously. The levelling instruments should always be kept free of collimation error which should be checked and adjusted before start of the work every day. A record of adjustments should be kept in the field book.

5.4 While carrying bench mark to the project site, levels shall be established on the permanent objects like culverts etc at least on one object in every 500m along the route with adequate description about the objects and levels to be mentioned in the level book/survey report to facilitate locating these objects later on. The route for transferring levels shall follow the existing roads as for as possible and this route shall require the approval of the engineer-in-charge before the commencement of work.

5.5 Closing error in levelling should be limited to l2 √ L mm, where L is the length of the route in km.

5.6 Payment shall be made on the basis of shortest length of the said route measured between the original reference bench mark and the bench mark to be established at site.

6.0 TOPOGRAPHICAL SURVEY AND MAPPING

6.1 Positions both in plan and elevation of all natural and artificial features of the area like waterways, railway tracks, trees, cultivation, houses/any structure, fences, pucca and kutcha roads including culverts and crossings, foot tracks, other permanent objects like telephone posts and transmission towers etc are to be established and subsequently be shown on survey maps by means of conventional symbols (preferably symbols of Survey of India maps). All earth deposits, depressions, hills and valleys within the area/areas are to be surveyed and plotted on maps by contours. Necessary levelling work of the entire area/ areas are to be surveyed and plotted on maps by establishing horizontal location so that location and sketching of contours for the area/ areas can be done at specified intervals and in specified scales on maps. In case of steep slopes and dense jungle etc where griding is not possible, the method of survey, contour intervals etc shall be decided by the engineer-in-charge at site. Any unusual condition or formations on the ground, location of rock outcrops and springs/falls etc shall also be noted and plotted on the maps.

6.2 The field work shall be done with total station equipment in the following steps.

i) Establishing horizontal and vertical controls and locating reference grids and bench mark in the area.

ii) Surveying for establishing spot levels and plotting contours.

iii) Surveying for locating natural and man made details as described earlier.

6.3 The grids for the survey work shall be established in N-S & E-W direction corresponding to magnetic north or the plant north as directed by the engineer-in-charge.

7.0 TRAVERSING

7.1 Triangulation or traversing or a combination of both shall be adopted for the purpose of establishing horizontal control and in order to determine the exact relationship between various existing points on the ground so that surveys required under the present scope of work and in future may be co-related and tied together.

7.2 Total intelligent station instruments should be deployed to achieve the specified accuracy of the work. Proper precautions for avoiding graduation errors, instrumental and personal errors should be scrupulously observed.

7.3 From main traverse/triangulation station, subsidiary stations shall be established at suitable interval to cover the entire area. Level of these stations shall be based on the bench mark established in the survey area. Occupying the main & subsidiary stations, all major details shall be surveyed by total station equipment. Further classification of details if necessary shall be carried out by plane table method.

7.4 The closing error in traverse shall not exceed one in twenty five thousand (1 in 25000) in terms of length or $L\sqrt{N}$ seconds (total in angular measurement) whichever is less (where L is the least count of the instrument and N is the number of stations).

8.0 CONTOURING

8.1 Contractor shall carry out spot level surveying at an interval of 25m for contouring the area/areas. Levels shall also be taken on all traverse stations and on salient points located at random over the area (ground points). Contours are to be interpolated at 0.5m intervals after the above

points are plotted. The contours shall not be just interpolated but properly surveyed on the ground so that features falling between the two successive levels are also picked up. Sufficient points properly distributed over the entire area shall be located and levels taken so that accurate contouring can be done. At places of sharp curvature or abrupt change in direction and elevation, points selected shall be close to each other. Salient points on ridge lines and valley lines shall also be measured.

8.2 Cross-section of canal/nallah if any shall be prepared by taking spot levels at 5m interval or less depending upon the site conditions and instructions of the engineer-in-charge. For contouring within reservoirs /ponds sounding technique shall be adopted.

8.3 Levelling operation shall always start from main/subsidiary stations whose levels are based on the bench mark established in the survey area and end on the same.

8.4 Closing error in levelling shall not exceed the limit mentioned in clause 5.5.

9.0 CONSTRUCTION OF BENCH MARK, REFERENCE & GRID PILLARS

9.1 Bench marks shall be constructed as per the sketch at **Fig - 1** for each isolated area as per the directions of the engineer-in-charge. The reduced level of the top of hemispherical ball and co-ordinates with respect to survey grid shall be engraved clearly on the top of the bench mark pillar. The top surface of MS plate alongwith the hemisherical ball shall be painted with anticorrosive paint.

9.2 There shall be one reference pillar constructed within one meter of each bench mark pillar as per the sketch at **Fig - 2**. The relation of these pillars with respect to the bench mark pillar and survey grids should be established and indicated in the drawings. The reduced levels and co-ordinates should be transferred & punched on the top of the steel plate of reference pillars. The top surface of MS plate shall be painted with anticorrosive paint.

9.3 Grid pillars as per the enclosed sketch at **Fig - 2** shall be constructed at the intersection of the 200m grid lines which should be established at site in N-S and E-W direction corresponding to magnetic north or plant north or as directed by the engineer-in-charge and their co-ordinates with reference to the survey grids shall be engraved on the top of the pillars. The top surface of MS plate shall be painted with anticorrosive paint. The pillars should be white washed.

9.4 The payment shall be made on the number of bench mark and reference/grid pillars actually constructed at site as per the directions of the engineer-in-charge.

10.0 Route Survey

10.1 Route Survey shall be conducted along a narrow strip/belt of the terrain selected after field reconnaissance or as directed by Owner/Engineer at Site. Topographical survey for existing storm drainage lines as well as for routing pipe lines, transportation and communication lines, etc. shall be conducted. Longitudinal profiles as well as cross-sections shall be taken at 50 m intervals or less in nearly flat/undulating terrains and at 20 m intervals in hilly terrains, as per direction of the Owner/Engineer. All cross-sections shall be with reference to centre line of corridor showing levels at every 2 - 5 metre intervals and all breaks in the profile. The width of strip/corridor shall be as specified in the drawing or as directed by Owner/Engineer.

11.0 PROGRESS REPORT

11.1 The contractor shall prepare and submit progress report in three copies every week to the engineer-in-charge without fail indicating status of setting out of the grids, total area surveyed, grid pillars constructed, methodology adopted for surveying and instruments deployed including staff working on the site and difficulties encountered during execution of the work etc.

11.2 The submission of such reports and review thereof by the engineer-in-charge shall not be deemed to absolve the contractor of his responsibility of timely completion of the assignment as per the time schedule indicated.

12.0 PREPARATION & SUBMISSION OF SURVEY MAPS

12.1 The contractor shall submit survey maps of the site in 1:1000 scale indicating grid lines and contour lines, demarcating all permanent features like roads, railways, waterways, buildings, power lines, natural streams, trees etc. Project area should have two originals, one showing spot levels and contours (with contour line interval of 0.5m) with grid lines and other with grid lines, contour lines and permanent features.

12.2 All the maps should be prepared in digitised forms using Inkjet/Pen plotter and standard computer software like Autocad - 12/13/14 or auto civil on standard A-0 size polyester base film. The block of name plate of all the drawings should be as per BHEL standard.

12.3 The contractor shall submit three copies of all the maps for review and approval of the engineer-in-charge. After approval, 6(six) prints of all the final maps alongwith a set of the originals on polyester base film and a floppy shall be submitted. Copies of the maps shall be submitted in proper flappers and original polyester base drawings should be handed over in proper card board covers indicating index of drawings.

12.4 Payment shall be made on the area actually surveyed as covered by the plan.

13.0 SUBMISSION OF FIELD DATA AND REPORT

13.1 Contractor shall submit all data pertaining to the survey in original to the engineer-in-charge.

13.2 All field data shall be submitted to the engineer-in-charge from time to time as per progress of the work.

13.3 Three copies of draft report shall be submitted on the completion of the field work for review and approval of the engineer-in-charge. The report should give the introduction of the site, methodology adopted for surveying the areas, calculation of errors, transfer of bench mark and any other calculation required for surveying and preparation of the survey maps.

13.4 Details of trees with their name, numbers and girths shall also form part of the survey report.

13.5 The survey report should also cover the following.

- General site observation such as location of access roads, river and nallah courses, irrigation canals etc.
- Presence of any well and /or tube well in the site and water level in them shall also be indicated.
- Whether there is any rock outcrops in the site.
- Existing drainage pattern of the site, possibility of water logging and high flood level of the area.

13.6 Final survey report shall be submitted in 6 copies of standard A4 size sheets properly bound and printed using good quality paper and material.

14.0 CLEARANCE OF JUNGLES AND CUTTING OF TREES

Clearance of jungles and cutting of trees as required to facilitate the survey work also form part of the contract. Necessary permission of concerned public bodies shall be secured by the owner. The contractor shall ensure that minimum amount of jungles are cleared and trees are properly cut under the direction of public bodies. The trees and jungles as cleared shall be stacked and handed over to the engineer-in-charge/owner. No extra payment is admissible under this account.

15.0 INSPECTION

The contractor shall make all arrangements of men, material, instruments, surveyors, necessary records and field data etc at the work site for checking of the work to the satisfaction of the engineer-in-charge or his authorised representative during the progress and on successful completion of the work. The contractor shall intimate well in advance before final decamping from work site so that the final work can be inspected by the engineer-in-charge. This will form a part of acceptance of the work for release of payments.

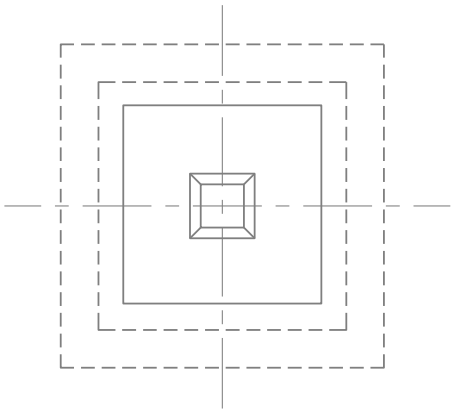

VIEW 1-1

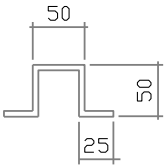

LUG DETAILS

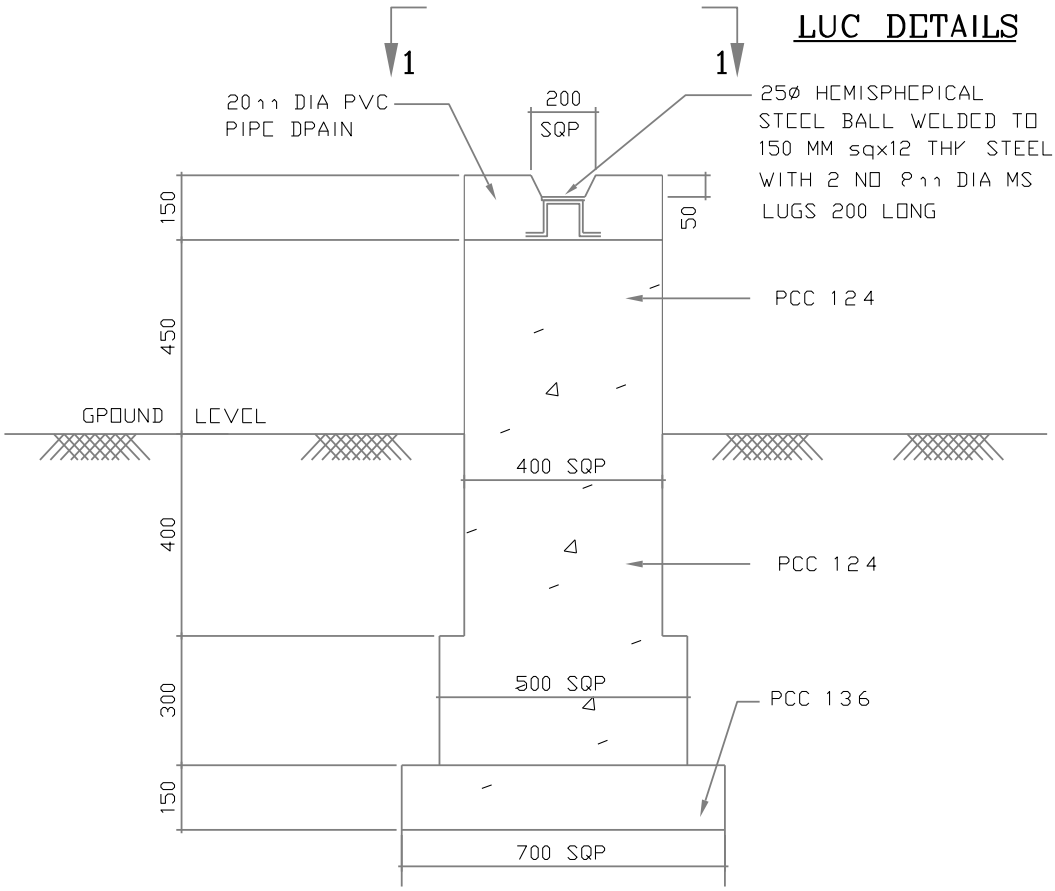

FIG 1
BENCH MARK PILLAR

NOTES

1. ALL DIMENSIONS ARE IN MM
2. ALL MATERIALS AND WORKMANSHIP SHALL BE AS PER SPECIFICATION & RELEVANT IS CODES

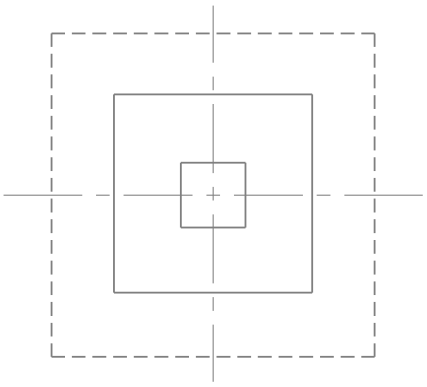

VIEW 2-2

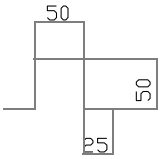

LUG DETAILS

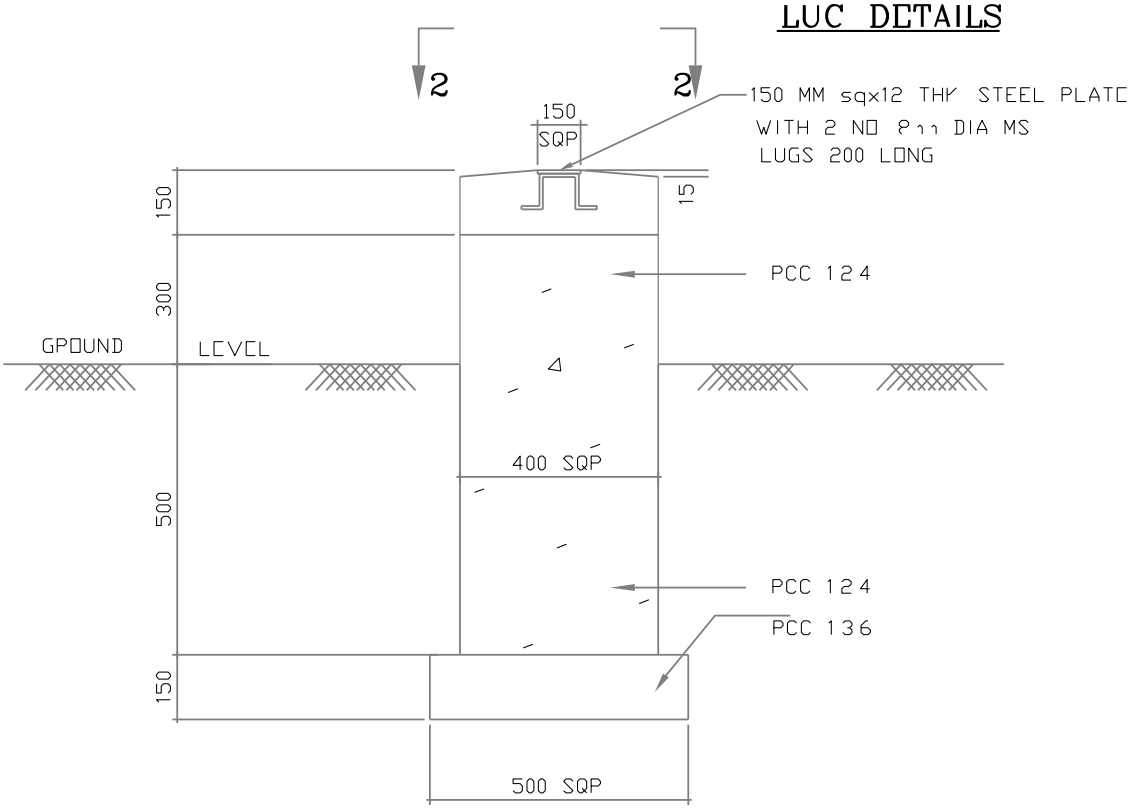

FIG 2

GRID PILLAR/REFERENCE PILLAR

NOTES

1 ALL DIMENSIONS ARE IN MM

2 ALL MATERIALS AND WORKMANSHIP SHALL BE AS PER SPECIFICATION & RELEVANT IS CODES

ROURKELA TOWN UNIT No. 32 BANDOMUNDA

TO BISRA

FROM ROURKELA

SHEET No. 1

RAURKELA TOWN UNIT No. 45

RAURKELA TOWN UNIT No. 51 "KA" BARKANI "KA"

'D' DYKE

SHEET No. 2

PLANT BOUNDARY WALL

ROURKE - TOWN LIMIT

PROPOSED SITE FOR PELLET PLANT

'E' DYKE

SHEET No. 3

TO JOIN SHEET No. 4

RESERVED FOREST

240/569, 240/570, 262/571, 228/610, 281/611, 228/617

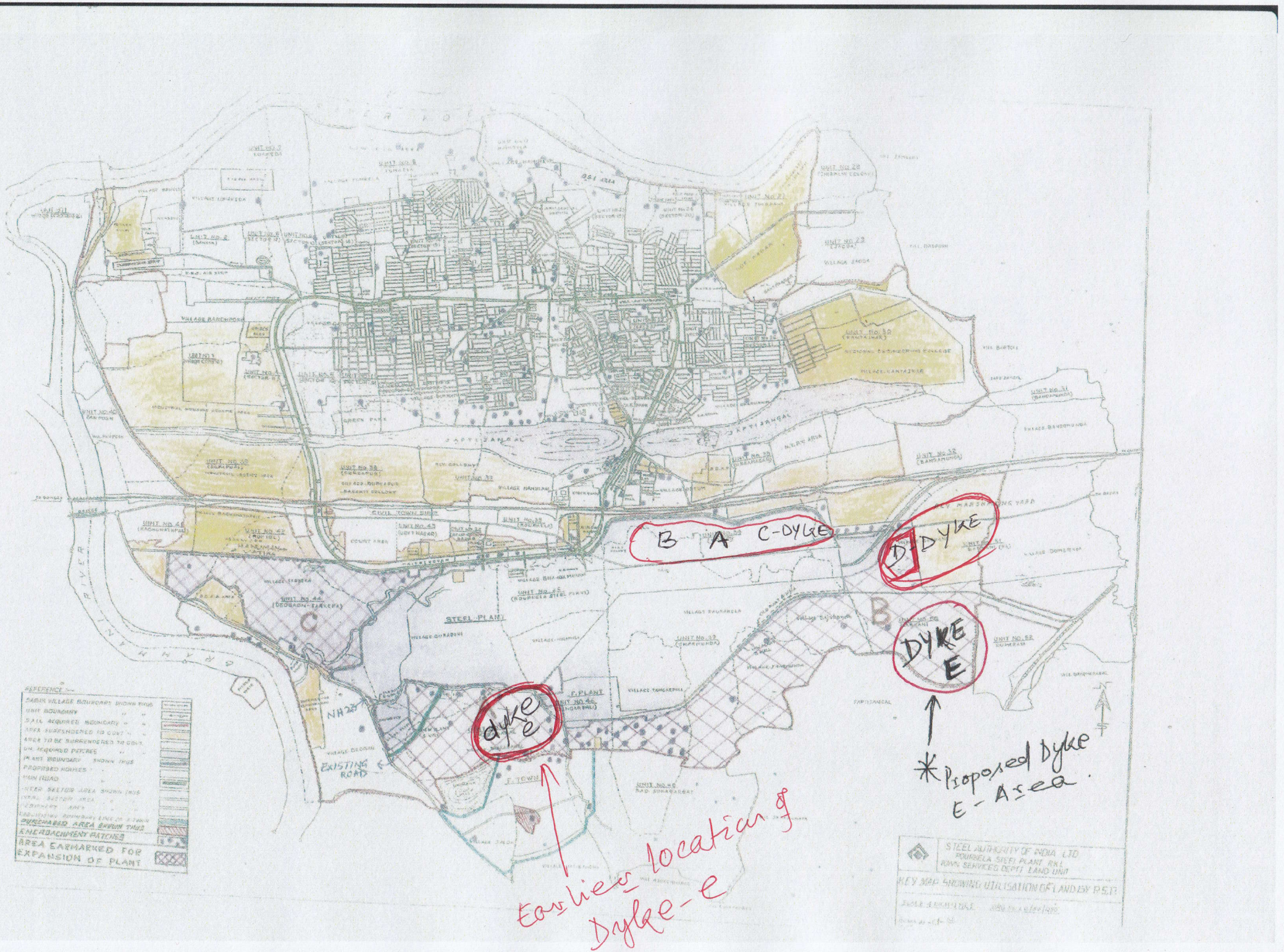

B A C-DYKE
D DYKE
DYKE E
dyke e
STEEL PLANT
EXISTING ROAD
* Proposed Dyke E-Area.
Earlier location of Dyke-e
STEEL AUTHORITY OF INDIA LTD
ENCROACHMENT PATCHES
AREA EARMARKED FOR EXPANSION OF PLANT

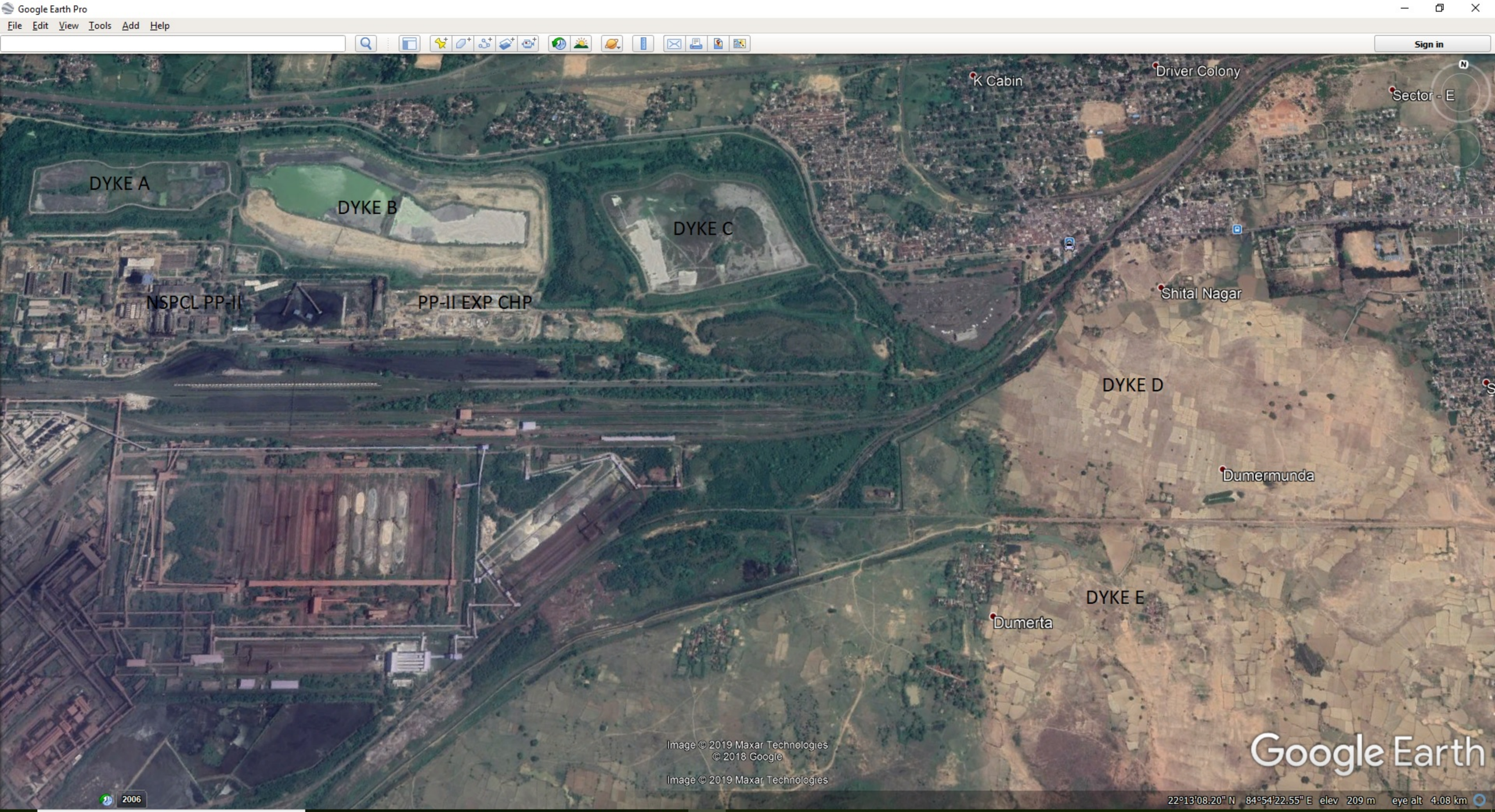
Google Earth Pro
File Edit View Tools Add Help
Sign in
K Cabin
Driver Colony
Sector - E
DYKE A
DYKE B
DYKE C
NSPCL PP-II
PP-II EXP CHP
Shital Nagar
DYKE D
Dumermunda
DYKE E
Dumerta
Image © 2019 Maxar Technologies
© 2018 Google
Image © 2019 Maxar Technologies
Google Earth
2006
22°13'08.20" N 84°54'22.55" E elev 209 m eye alt 4.08 km
Type here to search
ENG
IN
10:52
16-09-2019

VOLUME-III PRICE SCHEDULE, REV-00	
Topographical Survey and Geo-Technical Investigation Work For Ash Dyke-E at 1X250 MW NSPCL ROURKELA TPP-III	
TENDER NO - PSER:SCT:RKL-C2004:20	
PREAMBLE	
1	This preamble forms part of tender document and schedule of items. The tenderer should read this preamble carefully before filling in rates for various items. Clauses under this preamble shall be read in conjunction with various volumes of tender and other tender sections as applicable and shall have precedence over any contrary statement mentioned any where in this document.
2	The work shall be carried out strictly as per specifications, description of the items in these schedule and / or engineer's instructions. Drawings enclosd with the tender are only preliminary and for guidence/tender purposes giving some idea of the work involved. The work is to be executed as per terms & conditions of the tender and actual drawings/documents, which shall be furnished during execution.
3	Items of work provided in this schedule but not covered in this specification shall be executed strictly as per instruction of the engineer.
4	Unless specifically mentioned otherwise in the tender document, the tenderer shall quote for the finished items and shall provide for the complete cost towards power, fuel, tools, tackles, equipment, constructional plants, temporary works, labour, dismantling of all temporary piping, structures, valves, pumps, tanks & other misc. equipment, strengthening of roads/culverts/bridges etc. including arranging all clearances etc. required for carrying out different activities & tests, materials, levies, transport, layout, repairs, rectification, maintenance till handing over, supervisions, colonies, shops, establishments, overheads, profits and all incidental items not specifically mentioned but reasonably implied and necessary to complete the work according to the complete tender document and this schedule.
5	The quantities of the various items mentioned in this schedule of items are approximate, based on very preliminary information and may vary to any extent or be deleted altogether. The quoted rates of each item will remain firm throughout the period of execution including extension, for reasons whatsoever, as long as variation in the total value of work executed under any part of this contract including extra items, if any but excluding any price variation remains, within fifteen percent (± 15%) of the awarded price as per LOI.
6	Prior written approval of BHEL shall be sought by the contractor in case quantity variation of any item crosses +50% (plus fify percent) limit during execution and approval to be obtained before execution of further quantity for this item.
7	In case Sealed /Paper Price Bids are opened for finalisation of the tender, for any Item Rate/BOQ based service contract, possibility of variation of quantity/ addition/deletion of items can not be ruled out. Under such circumstances, after execution of work, if it is observed that standing as L-1 is changed based on actual quantity executed, the bidder shall give suitable rebate to maintain your standing as L-1. Since this aspect can be assessed at the end of execution, necessary adjustment will be effected at the end of execution in final bill.This condition shall not be applicable where the tender is finalised through Reverse Auction.
8	BHEL reserve the right to rationalize the rates, quoted by L-1 bidder against unit rate items and/ or other optional items with respect to item-wise lowest rates (amongst the participating bidders), before placement of order.The rates of unit rate/optional items shall remain valid till execution of the order, if the job/work is awarded to the bidder.
9	The rates quoted shall be inclusive of cleaning of site of any vegetation, dressing , clearing of old structures and leveling etc. including fixing of grid pillars, benchmarks etc. required for commencement of site activities. No separate payment will be made towards the same.However, if separate rate for such item is avalable in the rate schedule, the same shall be considered.
10	Rates shall be quoted in figures and in words in clear legible writing. No overwriting is allowed. All scoring and cancellations should be countersigned and in case of illegibility the interpretation of engineer shall be final. All entries shall be in English language.
11	All works item wise shall be measured upon completion and paid for at the rates quoted and accepted as per BHEL approved payment schedule/billing break-up.
12	The tenderer shall be deemed to have visited site and made himself aware of all the site conditions, studied the specifications and details of work to the done within the time schedule attached and to have acquainted himself of the conditions prevailing at site before submission of his bid/offer. No claim whatsoever due to lack of knowledge of site conditions shall be entertained after award of the work.
13	No splitting of the job is envisaged unless the same is specifically indicated in the TCC/Vol-1F. Decision of BHEL in this regard shall be final and binding to the bidders.
14	Bidders are not allowed to alter the Price Schedule format including item description,quantity etc. and the offer is liable for rejection if the bidders submit their prices in Price Schedules modified by them.BHEL reserves the right to reject the offers of bidders who submit offers in Price Formats which are modiified/altered by them. Also putting any comments instead of rates/price in the designated column of the rate schedule shall make the offer liable for rejection.
15	Bidders to note that for Civil &/Structural packages, against a particular item against a ST No. appearing in more than one schedule of the BOQ, same rate must be quoted in all schedules for that particular items with same descriptions. If by error, different rates are quoted in different schedules for same ST No.(i.e. item with same description), then the higher of the rates shall be considered for evaluation but awarding shall be done with the lower rate ,if the bidder becomes L-1. The same modality shall be applicable for other item rate sevice contracts where item with same decription is repeated in different schedules.
16	For Lumpsum Service Contract : The items/components indicated in the tender is indicative and may vary to any extent. No compensation shall be payable in case of any variation in the items/components listed in the bill of quantities if the executed weight remains within the variation limit. However, in case of deletion of any item or addition of new items over and above the items listed or variation of existing quantity beyond variation limit specified, adjustment (i.e. Payment or recovery as the case may be) shall be done on pro-rata basis based on the Rate per MT worked out from the quoted lump-sum Price and the total weight of components listed /indicated in price schedule plus 15% weight variation limit.
17	Engineer's decision shall be final and binding on the contractor regarding clarification of items in the schedule with respect to the other sections/volumes of the contract.
18	In case of tender for Civil and/or Structural works,if the Non-schedule items are not quoted by the bidder, it will be treated at par with rate of corresponding item of CPWD/PWD/DSR schedule as prescribed in the tender/BOQ cum Rate Schedule. PVC/escalation is not payable for these Non-scheduled items.
19	No interest, whatsoever, shall be payable by BHEL on the security deposit, any bank guarantee submitted or any amount due to successful bidder/contractor. No idling charge whatsoever (either for labour or any other resources) is payable by BHEL for any reason whatsoever.
20	Size and weights of various items are mentioned in the attached BOQ cum rate/price schedule for reference purpose only & these shall not be taken into consideration for quoting/calculating amount in the rate schedule. These shall be utilised as per relevant sections of tender. Bidders shall quote for each item in the rate column, taking unit as mentioned in the quantity column. Rates shall be filled in both figures and words. Amount shall be calculated based upon these rates multiplied by the mentioned quantity for the respective items.
21	Bidder's Total price shall be considered for evaluation unless stated otherwise.
22	In case of BOP packages, if Bidder does not quote/indicate the price for freight chagses against indicated rate schedule, the same shall be considered as 2% of basic price and adjusted with the total quoted price against each item keeping the total quoted price unaltered.

VOLUME-III PRICE SCHEDULE, REV-00			
Topographical Survey and Geo-Technical Investigation Work For Ash Dyke-E at 1X250 MW NSPCL ROURKELA TPP-III			
TENDER NO - PSER:SCT:RKL-C2004:20			
SCH-1 : TOTAL PRICE			
SL NO	DESCRIPTION	PRICE SCHEDULE REF	TOTAL QUOTED PRICE (IN INR)
1.0	TOTAL PRICE FOR GEOTECHNICAL INVESTIGATION & TOPOGRAPHICAL SURVEY WORK FOR ASH DYKE-E AT 1 X 250 MW NSPCL ROURKELA TPP-III AS PER TENDER SPECIFICATION.	SCH 2 - BREAK UP OF TOTAL PRICE	*IN FIGURES:-* *IN WORDS:-*

NOTE	
1.0	Bidder shall quote total price for total price of SCH-1- Part only at Sl No. 1 above. All other amounts / rates of each item of works in respective schedules / parts will be derived based on allocated percentages. As such, any uncalled figure/ amount noted at any other place / schedule of Volume-III will not be recknoed & will stand null & void.
2.0	Bidder to note that total price at Sl No. 1 above shall be considered for evaluation & awarding. As such total price should be complete in all respect for the full scope defined and considering all terms and conditions.
3.0	Bidder's quoted total price of SCH-3 & SCH-4 at Sl. No 1 above, respectively shall be apportioned into amount of various items of works based on allocated percentages against respective item, in respective schedules / parts. As such, bidder shall not indicate / quote any amount / rate in these schedules / parts and any amount / rate quoted against any item shall not be taken into cognizance / account and offer may be liable for rejection.
4.0	Based on the itemwise percentage allocations, the amount for the individual items of the Bill of Quantity shall be arrived at. The rates of individual items shall be derived from the amount against each items after rounding off .
5.0	Bidders to note that this is an item rate contract. Payment shall be made for the actual quantities of work executed at the unit rate arrived at as per Sl No. 6 below.
6.0	Based on the itemwise percentage allocations, the amount for the individual items of the Bill of Quantity shall be arrived at. The rates of individual items shall be derived from the amount against each items and its quantity after rounding off to upto 8 decimal places. However, RA bill payment shall be done after rounding off the gross amount to two decimal points. Any adjustment, if required, due to such methodology, will be effected / adjusted in final bill.
7.0	Any item as per scope of work, if not included in the price quoted above and shown separately will not be taken cognizance of and the offer shall be liable for rejection.
8.0	Price format shall not be changed by bidder in any case and it may lead to cancellation of their offer.
9.0	The quantity of items may vary during execution mainly due to actual requirement etc. The unit rates work out from the overall amount quoted & accepted by BHEL shall be considered and no separate unit rates shall be allowed. Unit rates shall be valid throughout the contract period.

VOLUME-III
PRICE SCHEDULE, REV-00

Topographical Survey and Geo-Technical Investigation Work For Ash Dyke-E at 1X250 MW NSPCL ROURKELA TPP-III,ODISHA

TENDER NO - PSER:SCT:RKL-C2004:20

SCH-2: BREAK-UP OF TOTAL PRICE

SL NO	DESCRIPTION	WEIGHTAGE
1.0	TOTAL PRICE FOR TOPOGRAPHICAL SURVEY (SCH -3)	0.49596796
2.0	TOTAL PRICE FOR GEOTECHNICAL INVESTIGATION (SCH- 4)	0.50403204
3.0	GRAND TOTAL	1.00000000

VOLUME-III PRICE SCHEDULE, REV-00				
Topographical Survey and Geo-Technical Investigation Work For Ash Dyke-E at 1X250 MW NSPCL ROURKELA TPP-III				
TENDER NO - PSER:SCT:RKL-C2004:20				
SCH-3: TOPOGRAPHICAL SURVEY				
SL NO	**ITEM**	**UNIT**	**QUANTITY**	**WEIGHTAGE**
1.0	Carrying out bench mark from the nearest GTS bench mark or any other available source as approved by the engineer-in-charge to different locations in the project area including clearing of jungles and/or cutting trees and any other works required for completion of the said item etc all complete as per specification and instructions of the engineer-in-charge. (Construction of bench mark pillar to be paid separately)	km	5	0.01909151
2.0	Carrying out topographical survey of plant and allied areas showing all permanent & general features and detailed contour survey by taking spot levels at 25m interval, carrying out cross section of canal/nallah/pipe corridor by taking spot levels at 5m interval or less including clearance of jungles and cutting of trees etc which are interfering with the survey works and any other field works necessary for the completion of the said item, preparation and submission of all plans (maps), reports, floppy and originals etc all complete as per specification and instructions of the engineer-in-charge.	Hectare	35	0.29027795
3.0	Construction of bench mark pillar/reference pillar/grid pillar at different locations including clearing of jungles, excavation, supply of materials, pillar marking, backfilling, white washing, painting on MS plate etc all complete as per specification, drawings and instructions of the engineer-in- charge.			
3.1	a) Bench mark pillar	Each	4	0.02424037
3.2	b) Grid/reference pillar	Each	30	0.16235813
4.0	TOTAL			0.49596796

VOLUME-III PRICE SCHEDULE, REV-00				
Topographical Survey and Geo-Technical Investigation Work For Ash Dyke-E at 1X250 MW NSPCL ROURKELA TPP-III				
TENDER NO - PSER:SCT:RKL-C2004:20				
SCH-4: GEO-TECHNICAL INVESTIGATION				
SL NO	**ITEM**	**UNIT**	**QTY.**	**WEIGHTAGE**
1.0	Making 150mm nominal diameter bore hole up to a maximum depth of 25 m below ground level at various locations in all types of soil including soft rock using suitable approved method of boring including chiselling, cleaning, providing casing pipes as required or as directed; performing standard penetration test at every 1.0m interval alternate to collection of undisturbed soil samples up to 5m depth below ground level and at every 1.5m interval alternate to collection of undisturbed soil samples beyond 5 m depth, at change of strata and at depths wherever undisturbed soil samples could not be collected; collection of undisturbed sample (UDS) at every 1.0m interval alternate to conducting standard penetration test up to 5 m depth below ground level and at every 1.5m interval alternate to conducting standard penetration test beyond 5 m depth; collection of disturbed soil samples and water samples, sealing and packing of samples, observation such as ground water table etc; transportation of all the collected samples to the laboratory and back filling of boreholes with sand on completion of the same etc all complete as per specification and as directed by the engineer-in-charge.	M	60	0.03466338
2.0	Core drilling (Nx size) in rock using hydraulic feed rotary drill and double tube core barrel with diamond bit including collection of core samples, performing SPT at locations where core recovery is less than 20%, maintaining continuous record of core recovery and RQD, keeping the cores in wooden core boxes, transporting the cores to laboratory, back filling the holes with 1 part of cement : 3 part of sand grout on completion of the same etc all complete as per specification, drawings and as directed by the engineer-in-charge.	M	100	0.16463496
3.0	Excavating trial pit of size 3m x 3m at various locations upto a maximum depth of 4m below ground level in all types of soil/softrock/rock which can be excavated with pick axe/crow bar etc including sheeting or shoring the sides for the purpose of stability, dewatering and maintaining the pit dry at all times, collecting disturbed/undisturbed samples and conducting field density test at 1m interval, starting from 1m depth below ground level and transporting all the collected samples to the laboratory; backfilling of the pit with excavated material etc all complete as per specification and as directed by the engineer-in-charge.	CUM	220	0.04749627
4.0	Performing Static cone penetration test at various locations all complete as per specification, drawings and as directed by the engineer-in-charge.	Each	2	0.00691328
5.0	Performing dynamic cone penetration test at various locations using 65mm cone with circulation of bentonite slurry etc all complete as per specification, drawings and as directed by the engineer-in-charge.	Each	9	0.02809052
6.0	Conducting pressure meter test in bore hole at 1m, 3m, 5m, 7m, 9m, 12m, 15m, 18m, 20m, 22m & 25m depth below ground level in all type of strata including drilling and preparation of bore hole of required size etc all complete as per specification, drawings and as directed by the engineer-in-charge.	Each	3	0.11796038
7.0	Conducting laboratory test on soil samples/ Ash/ Slag at an approved laboratory including preparation of samples to determine the following properties etc all complete as per specification.			
a	Bulk density and moisture content	Each	15	0.00093069
b	Sieve analysis	Each	15	0.0012973
c	Hydrometer analysis	Each	10	0.00079905
d	Liquid limit and plastic limit	Each	10	0.00084717
e	Shrinkage limit	Each	10	0.00071978
f	Specific gravity	Each	10	0.0009498
g	Swell pressure	Each	10	0.00165472
h	Free swell index	Each	10	0.00108427
i	Relative density	Each	25	0.01390442
j	Unconfined compressive strength	Each	25	0.00271068
k	Direct shear test	Each	25	0.00331014
l	Triaxial shear test			
(i)	unconsolidated undrained test	Each	12	0.00184581
m	One dimensional consolidation test	Each	5	0.00112178
n	Standard Proctor compaction test	Each	25	0.01861448
o	Permeability test	Each	20	0.01415496
p	Chemical analysis	Each	10	0.00456214
8.0	Conducting laboratory test on rock samples including preparation of the samples to determine the following properties etc all complete as per specification.			

VOLUME-III PRICE SCHEDULE, REV-00				
Topographical Survey and Geo-Technical Investigation Work For Ash Dyke-E at 1X250 MW NSPCL ROURKELA TPP-III				
TENDER NO - PSER:SCT:RKL-C2004:20				
SCH-4: GEO-TECHNICAL INVESTIGATION				
SL NO	**ITEM**	**UNIT**	**QTY.**	**WEIGHTAGE**
A)	Point load strength	Each	4	0.00096608
9.0	Conducting chemical test on water samples to determine the carbonate, sulphate, chloride and nitrate contents, pH value, turbidity, organic matter and any other chemicals harmful to foundation material etc all complete as per specification.	Each	2	0.00164693
10.0	Preparation and submission of draft report in 3 copies and final report in 5 hard copies and 2 soft copies on CD after the approval of draft report including all field records, laboratory test results, graphs, analysis of test results, photo graphs showing details of field tests/soil/rock samples/Trail pits and recommendation etc all complete as per specification.	LS	1	0.03315305
	TOTAL			0.50403204