Project
Engineering
Management

Bharat Heavy Electricals Limited

(A Govt. Of India Undertaking)

Ref. Enquiry No.: PE/PG/RTC/E-6229/2019

Dated: 12.06.2019

TENDER ENQUIRY THROUGH E-PROCUREMENT

DUE DATE
22.06.2019
BY 02:00PM

SUBJECT: TENDER ENQUIRY FOR RATE CONTRACT OF SELF CLEANING STRAINERS (RC3) AS PER TECHNICAL SPECIFICATION NO. PE-TS-RC3-165-N004

OUR REF: TENDER ENQUIRY NO: PE/PG/RTC/E-6229/2019, DTD-12.06.2019

Dear Sir/ Ma'am,

We are pleased to invite your offer for subject package in two parts strictly as per Clause-2.0 of the enclosed **"Instructions to Bidders"**. Please upload your best quotation/ offer on https://bhel.abcprocure.com for the requirement strictly as per schedule of price format before above mentioned due date & time. The details of the tender enquiry are as mentioned below:

Sl. No	Description for which Rate Contract is desired	Tentative Quantity	Delivery required
1	**SELF CLEANING STRAINERS-** Refer Technical Specification no. PE-TS-RC3-165-N004 for detailed description.	As per BOQ cum price schedule in Annexure-I & IA) cumulative for the Prospective Projects as per Annexure-IV	**For Main Supply**- "Four (04) months from drgs. /docs. approval in CAT-I issued by BHEL. Successful bidder to make 1st submission of drawing/docs as per list mentioned in clause 10.0, Sub-Section IA of Technical Specification- PE-TS-RC3-165-N004. In case there are delays in drawing/docs submission and resubmission, that much delay would be reduced from delivery period" **For Services at Site (Installation Check, Commissioning, Trail Run and PG Testing):** Vendor to depute their representative to site for carrying out above activities within two weeks of intimation by BHEL, subject to site readiness, failing which LD @ 0.5% per week or part thereof of total contract value for Services at Site for that project shall be levied limited to 10% of contract value for Services at Site. **For Mandatory Spares**: Mandatory Spares to be delivered within 04 months from manufacturing clearance. Separate dispatch/ manufacturing clearance will be issued for Mandatory Spares.

Your best quotation/offer for the above requirement, in line with our terms and conditions, should be submitted online via e-procurement system. It shall be the responsibility of the bidder to ensure that the Tender is submitted on or before the due date by 2 p.m. Part-I bids shall be opened at 3 p.m. on the due date in the presence of authorized representatives of the bidders, who may like to be present.

Note: -

1. ***Please note that Part Supplies offered for tender BOQ shall disqualify the bidder's offer.***
2. ***Documents and Credential as per Technical PQR, Techno Commercial Bids and Price Bids should be uploaded on the e-procurement portal.***

MR N C SHARMA
DY MANAGER/CMM
BHEL/PS-PEM
POWER PROJECT ENGINEERING INSTITUTE,
PLOT NO. 25, SECTOR - 16A, NOIDA (UP)
(OFF) 0120-4213591, 9911170053

Regd. Office:
BHEL House
Siri Fort
New Delhi-110049

Ref. Enquiry No.: PE/PG/RTC/E-6229/2019 Dated: 12.06.2019

TENDER ENQUIRY THROUGH E-PROCUREMENT

DUE DATE
22.06.2019
BY 02:00PM

Please refer GCC Rev-06 & Corrigenda to GCC Rev 06 which is available on www.bhelpem.com. You are requested to kindly download the same.

1. **Rate contract is proposed for two (2) years (with a provision for further extension after review on mutual consent) in the ratio of 70:30 value wise at L1 FOR SITE price for this package. Splitting of RC among 2 vendors may be changed during project ordering process if any vendor in RC is not approved by customer (i.e. BHEL may place order on any of the vendor in RC up to total applicable RC value in case of non-availability of customer approval for other vendor in RC). However, order for a project shall not be split and the same shall be informed to bidders through NIT.**

2. L1 Rates shall be counter offered to all bidders who participated in Price Bid Opening/RA for 30% value and in case acceptance of counter offer received from more than one vendor then **acceptance shall be considered as per FINAL Price Bid Opening / Reverse Auction Ranking (as applicable)**. If none accepts L1 rates, RC shall be done with L1 vendor for 100% value.

3. **Evaluation will be done on overall L1 (Total cost to BHEL excluding GST) basis with necessary loading as applicable.**

4. **Rate Contract is proposed to be finalized on total lump sum basis. However, there is % allocation weightage against BOQ quantity of each item which shall be used for arriving at price break up and same will also ensure that item rates of L1 bidder will be lowest for each items compared with other bidders' rate.**

5. Bidders to note the following: -
   i) Rate contract shall be decided on the basis of grand Total Ex works price & Freight Charges of Total BOQ of Self Cleaning Strainers as listed in Annexure-I.
   ii) Bidder to give single % of freight charges considering anywhere in India in the freight column. Bidders have to give same % of freight for each line item of Price Schedule.
   iii) Bidders have to quote freight charges in terms of percentage of their quoted total Ex-Works prices. If any bidder will quote freight as Nil/Included, Freight@ 4.1% shall be added to BHEL estimates for evaluating offer of such bidders.
   iv) Bidders to mention applicable GST rate on (total Ex. works + freight) in the specified cells of price schedule. However, may please note that GST shall not be considered in evaluation.
   v) Though evaluation is proposed on Ex Works + Freight, but there is % allocation weightage against BOQ quantity of each item (refer Annexure-I) which shall be used for arriving at price break up. Bidders need to give only their Total ex-works price for given BOQ of Main Supply at the specific cells ("X") that has been kept opened in the price schedule available in the e-procurement portal (i.e. sl. no. A.4 column no. 8 for Annexure I).
   vi) Rest of the prices shall be derived by BHEL in line with allocation fixed for each item. There is formula applied in price schedule form available in e-procurement portal. As soon as bidder fills the cells for Total Ex works, freight percentage and GST percentage, rest values for e.g. unit ex works – item wise, total ex works – item wise, FOR site price – item wise will filled automatically. Bidders can also validate and cross check the same by using Check Formula button.
   vii) For better clarity to the bidders where value is to be filled is noted as "to be quoted" and for other columns it will be noted as "derived" which denotes shall be derived by BHEL as per allocation fixed against each item.

MR N C SHARMA
DY MANAGER/CMM
BHEL/PS-PEM
POWER PROJECT ENGINEERING INSTITUTE,
PLOT NO. 25, SECTOR - 16A, NOIDA (UP)
(OFF) 0120-4213591, 9911170053

TENDER ENQUIRY THROUGH E-PROCUREMENT

DUE DATE
22.06.2019
BY 02:00PM

viii) HSN code for tendered item (Main supply & spares) is 8421 and HSN code for services at site is 998335. Incomplete offer shall be summarily rejected.

ix) Pre-Qualifying Requirements (PQR): All the bidders (registered/ non-registered) will be asked to submit documents fulfilling PQR requirements along with the bid & their further evaluation shall be done accordingly.

x) Bidders to note that their bid shall be conditional subject to qualify PQR by registered vendors & non-registered vendors have to qualify PQR & get registered with PEM for the package.

xi) Additional overhead charges shall be 5% instead of 30% as mentioned in clause no 26.2 of GCC Rev 06

xii) **Quantity variation shall be +30% of the contract value.** Project list is indicative only, BHEL may ask for delivery anywhere in India for any of the project added in the prospective project/ existing projects during RC period.

xiii) CIF is not applicable for the package.

xiv) Integrity pact is not applicable for this tender.

xv) Bidders to note Model Conciliation Clause under BHEL Conciliation Scheme, 2018 as per Annexure-VI.

xvi) In case of joint bidding, Bidders shall be required to furnish scope matrix which should be clearly defined between foreign bidder and their Indian representative along with the offer for the Main Supply and Erection & Commissioning.

xvii)

Bidders are requested to refer following clause regarding Public Procurement (Preference to Make in India) - PPP-MII.

"For this procurement, Public Procurement (Preference to Make in India), Order 2017 dated 15.06.2017 & 28.05.2018 and subsequent orders issued by the respective Nodal Ministry shall be applicable even if issued after issue of this NIT but before finalization of contract/PO/WO against this NIT.

In the event of any Nodal Ministry prescribing higher or lower percentage of purchase preference and / or local content in respect of this procurement, same shall be applicable. Vendors are requested to go through the above mentioned orders and confirm the following:"

- The local supplier at the time of tender, bidding or solicitation shall be required to provide self-certification that the item offered meets the minimum local content as per above mentioned orders and shall give details of the location(s) at which the local value addition is made.

xviii)

MSME/Start up Vendors to submit applicable documents along with their offer for availing the benefits as per GOI guidelines. Further PEM is already registered with RXIL(TReDS) Platform. You are requested to get registered with RXIL(TReDS) Platform to avail the facility as per GOI guidelines.

TERMS AND CONDITIONS:

1. Procurement of the subject package shall be done through e-procurement
2. Enquiry No., due date etc. must be legibly super scribed on the offers as per clause no. 2.0 of "Instructions to Bidders".
3. Offers should be uploaded in two parts online at https://bhel.abcprocure.com as follows:
   a) Part-I Bid: - Documents and Credential as per Technical PQR and Techno-Commercial offer (along with un-priced copy of un-priced bid and un-priced schedule of Technical-Commercial Deviation, Annexure I & II)
   b) Part II Bid: - Price Bid and Priced schedule of Technical-Commercial Deviation

MR N C SHARMA
DY MANAGER/CMM
BHEL/PS-PEM
POWER PROJECT ENGINEERING INSTITUTE,
PLOT NO. 25, SECTOR - 16A, NOIDA (UP)
(OFF) 0120-4213591, 9911170053

Ref. Enquiry No.: PE/PG/RTC/E-6229/2019 **Dated: 12.06.2019**

TENDER ENQUIRY THROUGH E-PROCUREMENT

DUE DATE
22.06.2019
BY 02:00PM

4. Bidder to note that this is a conditional Tender enquiry and the price bid (Part-II) opening/RA participation shall be subject to following condition:
   a) Techno-commercial qualification/recommendation of bidder by the BHEL-PEM

5. Terms and conditions: -
   a) Part I bid will be opened on date & time mentioned in the NIT or subsequent corrigenda/amendments, if any.
   b) **Techno-commercial offer of only those bidders shall be evaluated who will meet the Technical pre-qualifying requirement of the tender.**
6. **Bidders shall submit their offers meeting the requirements of the following tender documents and other Terms and Conditions included in this Enquiry Letter:**
   - **ANNEXURE-I of GCC Rev. 06**: Letter to be furnished by the Bidders.
   - **ANNEXURE-II: DEVIATION SHEET (COST OF WITHDRAWL)** - To be furnished by the Bidders

   All the above Tender Documents shall automatically become a part of the Order/Contract after its finalisation.
7. Vendors shall quote in accordance with the requirements mentioned in the tender documents. In case of deviations (Technical/ Commercial), the same shall be highlighted separately giving Clause references along with the Cost of withdrawal of Deviations as per **Annexure-II to GCC Rev 06 of "DEVIATION SHEET (COST OF WITHDRAWL)"** along with reasons for taking such deviations

   Bidder to note all the points mentioned in "Notes" of Annexure-II to GCC Rev 06
8. ***Please note the following:***
   a. Price format is enclosed for compliance.
   b. SCC enclosed for compliance.
   c. GCC enclosed for compliance. GCC Rev-06 is available on www.bhelpem.com. You are requested to kindly download the same. GST related corrigenda to GCC Rev.06 is enclosed.
9. Tenders shall be submitted strictly in accordance with the requirements of the above tender documents.
10. Standard pre-printed terms & conditions of the tenderers shall not be considered valid.
11. Validity of offer shall be as per **Clause No. 7.0, "Instructions to Bidders" of GCC Rev 06.**
12. Unsolicited fresh/revised Price Bids shall not be entertained.
13. Purchaser shall be under no obligation to accept the lowest or any other tender and shall be entitled to accept or reject any/all tender(s) in part or full without assigning any reason whatsoever.
14. Late tenders will be rejected.
15. Tenders and all correspondence thereof, shall be addressed to the undersigned by name & designation and sent at the following address:

Mr. I P SINGH, DGM/CMM **M/s Bharat Heavy Electricals Ltd.,** **Project Engineering Management,** Power Project Engineering Institute, HRD & ESI Complex, Plot No 25, Sector-16 A, Noida-201301 **Kind Attn: I P SINGH/ CMM**	**Mr. N C SHARMA, DY MGR/CMM** **M/s Bharat Heavy Electricals Ltd.,** **Project Engineering Management,** Power Project Engineering Institute, HRD & ESI Complex, Plot No 25, Sector-16 A, Noida-201301 **Kind Attn: N C SHARMA/ CMM**

MR N C SHARMA
DY MANAGER/CMM
BHEL/PS-PEM
POWER PROJECT ENGINEERING INSTITUTE,
PLOT NO. 25, SECTOR - 16A, NOIDA (UP)
(OFF) 0120-4213591, 9911170053

Regd. Office:
BHEL House
Siri Fort
New Delhi-110049

Ref. Enquiry No.: PE/PG/RTC/E-6229/2019 **Dated: 12.06.2019**

TENDER ENQUIRY THROUGH E-PROCUREMENT

DUE DATE
22.06.2019
BY 02:00PM

E-MAIL: indra.pal.singh@bhel.in Ph. No. 0120-4368749 ,9818989654	E-MAIL: ncsharma@bhel.in Ph. No. 0120-4213591 ,9911170053

16. Definition of Terms is also enclosed. These definitions will apply to all the tender documents including this Enquiry Letter.
17. **PRE-QUALIFICATION REQUIREMENT: -**
Bidders is requested to fill up the details in "TECHNICAL PRE-QUALIFYING REQUIREMENT" as per the conditions mentioned in the PQR and also to submit the credentials.
Bids of only those bidders shall be evaluated who meet the Technical pre-qualifying requirements (if applicable).
18. Bidders to note that their bid shall be conditional subject to qualify PQR by registered vendors & non-registered vendors have to qualify PQR & get registered with PEM for the package.
For registration in PEM "Bidders needs to apply & get registered for subject package with PEM before P-2 (price bid opening) & **hence you need to apply online for registration on PEM web portal & have to enclose acknowledgement with this effect with the bid documents**"
19. Bidder has to submit "NO DEVIATION CERTIFICATE FOR COMMERCIAL TERMS AND CONDITIONS AS PER GCC (06), SCC AND NIT". In case of deviations, bidder to clearly mention the same with their techno-commercial offer as per Point No-5 of NIT.
20. All the above Tender Documents shall automatically become a part of the Order/Contract after its finalization.
21. **The offers of the bidders who are on the banned list as also the offer of the bidders, who engage the services of the banned firms, shall be rejected. The list of banned firms is available on BHEL website www.bhel.com.**
22. **"The Bidder along with its associate/ collaborators/ sub-contractors/ sub-vendors/ consultants/ service providers shall strictly adhere to BHEL Fraud Prevention Policy displayed on BHEL website http://www.bhel.com and shall immediately bring to the notice of BHEL Management about any fraud or suspected fraud as soon as it comes to their notice."**
BHEL Fraud prevention policy is also uploaded in vendor's section on www.bhelpem.com.
23. **Bidders are requested to visit constantly our website to update them self for any technical or commercial change in the NIT.**
24. **All** corrigenda, addenda, amendments, time extensions, clarifications etc. to the tender will be hosted on BHEL websites only (www.bhelpem.com., www.bhel.com & https://bhel.abcprocure.com under subject tender reference. Bidders are requested to visit our websites from time to time to keep themselves updated. **Bidders may go through the Sellers' manual & Help documents provided on E-Procurement Portal website & obtain required Digital Signature Certificate for participating in the subject Tender.**
25. Bidders to submit their offers strictly in line with the enclosed price format.
26. Inspection shall be done by BHEL/ END CUSTOMER/Third party Agency (finalized by BHEL).
27. Any other taxes & duties applicable on the date of bid but not quoted by the bidders shall be to bidder account.
28. Delivery terms for dispatches shall be FOR Dispatch Station.
29. This enquiry is subject to Conditions/ limits if any imposed in PMD / Vendor registration.

MR N C SHARMA
DY MANAGER/CMM
BHEL/PS-PEM
POWER PROJECT ENGINEERING INSTITUTE,
PLOT NO. 25, SECTOR - 16A, NOIDA (UP)
(OFF) 0120-4213591, 9911170053

Regd. Office:
BHEL House
Siri Fort
New Delhi-110049

TENDER ENQUIRY THROUGH E-PROCUREMENT

DUE DATE
22.06.2019
BY 02:00PM

30. Foreign & indigenous bidders participating through open/limited tender will necessarily have to but class III DSCs issued by the certifying authorities in India. Basic procedure/ checklist is uploaded on www.bhel.com.

31. Non- registered bidder to submit the credentials required for Registration in BHEL PEM: -
"Online Registration Portal is operational in BHEL. Non-registered Vendors, who wish to apply for registration with BHEL-PEM, have to apply through Online Registration Portal available at www.bhelpem.com - vendor section - Online Supplier Registration. All credentials and/or documents duly signed and stamped related to registration has to be uploaded on the website and submit the application for registration. One set of hard copy of the filled-up SRF downloaded from Online Registration Portal duly signed and stamped has to be submitted."

32. Purchaser reserves the right to split up the scope of the tender enquiry and place the orders for different scope/ items with different bidders and also increase or decrease the quantity.

33. BHEL reserves the right to go for Reverse Auction (RA) (Guidelines as available on www.bhel.com) instead of opening the sealed envelope price bid, submitted by the bidder. This will be decided after techno-commercial evaluation. Bidders to give their acceptance with the offer for participation in RA. Non-acceptance to participate in RA may result in non-consideration of their bids, in case BHEL decides to go for RA.
Those bidders who have given their acceptance to participate in Reverse Auction will have to necessarily submit 'Process compliance form' (to the designated service provider) as well as 'Online sealed bid' in the Reverse Auction. Non-submission of 'Process compliance form' or 'Online sealed bid' by the agreed bidder(s) will be considered as tampering of the tender process and will invite action by BHEL as per extant guidelines for suspension of business dealings with suppliers/ contractors (as available on www.bhel.com).

The bidders have to necessarily submit online sealed bid less than or equal to their envelope sealed price bid already submitted to BHEL along with the offer. The envelope sealed price bid of successful L1 bidder in RA, if conducted, shall also be opened after RA and the order will be placed on lower of the two bids (RA closing price & envelope sealed price) thus obtained. The bidder having submitted this offer specifically agrees to this condition and undertakes to execute the contract on thus awarded rates.

If it is found that L1 bidder has quoted higher in online sealed bid in comparison to envelope sealed bid for any item(s), the bidder will be issued a warning letter to this effect. However, if the same bidder again defaults on this count in any subsequent tender in the unit, it will be considered as fraud and will invite action by BHEL as per extant guidelines for suspension of business dealings with suppliers/ contractors (as available on www.bhel.com)."

As a reminder to the bidders, system will flash following message (in RED Color) during the course of 'online sealed bid':

"Bidders to submit online sealed bid less than or equal to their envelope sealed bid already submitted to BHEL"

Detailed guidelines of reverse auction 2016 are available in "information section" of www. bhelpem.com, same are applicable for subject tender.

IMPORTANT INSTRUCTION TO BIDDERS IN CASE OF REVERSE AUCTION

The Bidders have to quote the Single Price (i.e. Total Ex-works + Freight) (excl. GST) in Reverse Auction i.e. Price mentioned in at sl. no. A.4 column no. 8 of Annexure-I plus freight amount with loading/de loading (if any). Price

MR N C SHARMA
DY MANAGER/CMM
BHEL/PS-PEM
POWER PROJECT ENGINEERING INSTITUTE,
PLOT NO. 25, SECTOR - 16A, NOIDA (UP)
(OFF) 0120-4213591, 9911170053

are to be inclusive of Packing & Forwarding charges, all the routine & type tests as per tender scope, Freight as applicable, including loading (if any). De-loading (if any) shall be done in line with NIT terms"

34. If any bidder has mentioned the term Not Applicable / Not required / Not Quoted in BHEL price format. The bidder needs to substantiate the same. If the same item will be required in future for the system same will be supplied free of cost.

35. L1 bidder will have to submit Bank Guarantee for each POs (irrespective of value) which will be placed under the Rate Contract finalised through this tender considering RC as original contract as per format mentioned in **Annexure-VII** to NIT instead of format mentioned in GCC Rev 06

36. All other terms and conditions shall be as per GCC Rev 06 and Special Conditions of Rate Contract as per attached Annexure-III. In the event of any contradiction in the terms and conditions mentioned, the order of preference shall be NIT / corrigenda related to GCC Rev.06/ Rate contract SCC / GCC Rev. 06

Thanking you,
Yours faithfully,
For and on behalf of BHEL

नरेश चन्द्र शर्मा / Naresh Chandra Sharma
उप प्रबंधक (सी एम एम) / Dy. Manager (C.M.M.)
भारत हेवी इलेक्ट्रिकल्स लिमिटेड / Bharat Heavy Electricals Ltd.
पावर सेक्टर–परियोजना इंजीनियरिंग प्रबंधन
Power Sector-Project Engineering Management
पीपीईआई भवन, एच.आर.डी.आई. एवं ईएसआई कॉम्पलेक्स
PPEI Bldg, H.R.D.I. & ESI Complex,
प्लाट नं. 25, सेक्टर
Plot No. 25, Sec.

N C Sharma/Dy. Mgr.
(Name & Signature of official)

Enclosure:

1. Enquiry Terms & Conditions
2. Price Format– Annexure I & Annexure IA
3. Techno-Commercial Deviation Sheet (Annexure-II to GCC Rev 06) – Annexure II
4. RC-SCC – ANNEXURE III
5. Prospective Project List – Annexure IV
6. Annexure V - Technical PQR
7. Annexure-VI- Model Conciliation Clause under BHEL Conciliation Scheme, 2018
8. Annexure VII - BG Format
9. BOQ & Technical Specifications
10. Corrigenda to GCC Rev 06

MR N C SHARMA
DY MANAGER/CMM
BHEL/PS-PEM
POWER PROJECT ENGINEERING INSTITUTE,
PLOT NO. 25, SECTOR - 16A, NOIDA (UP)
(OFF) 0120-4213591, 9911170053

Regd. Office:
BHEL House
Siri Fort
New Delhi-110049

ANNEXURE- I

RATE CONTRACT - NIT REF NO-PE/PG/RTC/E-6229/2019 dtd 12/06/2019

PRICE SCHEDULE FOR SELF CLEANING STRAINERS (RC-03)

NAME OF VENDOR-

SL NO	ITEM DESCRIPTION	UOM	ORDERED QUANTITY	HSN CODE	UNIT EX-WORKS PRICE (DULY PACKED) IN PERCENTAGE OF TOTAL EX WORKS PRICE OF SELF CLEANING STRAINERS GIVEN AT SL NO-A.4 OF COUMN 8	UNIT EX-WORKS PRICE (DULY PACKED) (INR)	TOTAL EX-WORKS PRICE (DULY PACKED) IN PERCENTAGE OF TOTAL EX WORKS PRICE OF SELF CLEANING STRAINERS GIVEN AT SL NO-A.4 OF COUMN 8	TOTAL EX- WORKS PRICE (DULY PACKED) (INR)	FREIGHT CHARGES WITHOUT GST @ % OF TOTAL EX WORKS (INR)	APPLICABLE GST RATE % ON (TOTAL EX WORKS + FREIGHT) (INR)	TOTAL F.O.R SITE PRICE (INR)
1	2	3		4	5	6	7	8	9	10	11
A	SELF CLEANING STRAINERS- MAIN SUPPLY										
A.1	TYPE I	NOS.	4	8421	12.03	Derived	48.10	Derived	% TO BE QUOTED	% TO BE QUOTED	Derived
A.2	TYPE II	NOS.	2	8421	12.74	Derived	25.48	Derived			Derived
A.3	TYPE III	NOS.	2	8421	13.22	Derived	26.43	Derived			Derived
A.4	TOTAL (A.1 TO A.3)						100.00	TO BE QUOTED = Rs X	Derived	Derived	Derived
B	CHARGES OF SITE ACTIVITIES (INSTALLATION CHECK, COMMISSIONING, TRAIL RUN AND PG TESTING)			Refer Annexure-IA for BOQ & % weightage Type wise (ex-works value of services at site component is 4.56% of "X" at sl. No. A.4 col. 8)							
C	MANDATORY SPARES			Refer Annexure-IA for BOQ & % weightage type wise (ex-works value of mandatory spares component is 57.03% of "X" at sl. No. A.4 col. 8)							
D	SERVICES AT SITE (OPTIONAL)- Per Day Charge for staying extra/ less number of days at site for each type of SCS			Refer Annexure-IA for BOQ & % weightage type wise (ex-works value of services at site (optional) component is 6.74% of "X" at sl. No. A.4 col. 8)							
E	GRAND TOTAL (A.4+B+C+D)										Derived = Rs Y

Note:-

1. Bidder to note that evaluation shall be on Grand Total Ex works price + Freight charges, however, Bidder to quote total Ex works value of the SELF CLEANING STRAINERS mentioned at A.1 to A.3 (Rs X) only as per the BOQ above. The item wise break up of Ex works prices (unit as well as total) for all the items in the BOQ shall be derived as per the formulae indicated above by BHEL. Indigenous bidder also need to indicate taxes percentage in the respective column and freight percentage of Ex works value considering delivery anywhere in India in the freight column.		
2. Rate contract shall be decided on the basis of grand Total Ex works price + Freight charges of Total BOQ		
3. % Freight as quoted for Main Supply items, same shall also be considered for mandatory spares items.		
4. Value is to be filled only where "to be quoted" is mentioned and for other columns where "derived" is mentioned same shall be derived by BHEL as per % allocation fixed against each item		
5. Bidder to note that total price indicated above at 'E' shall be considered for evaluation and hence should be complete in all respect for the full scope defined and considering all terms and conditions agreed.		
6. Prices shall remain firm during contract execution.		
7. For any clarification please refer Technical Specification No-PE-TS- RC3-165-N004 Rev 00		
9. Price of all accessories, commissioning spares, special Tools & tackle and other accessories not listed above shall be included in the price of SELF CLEANING STRAINERS & shall be supplied with the SELF CLEANING STRAINERS.		
10. One site visits of four (4) days each has been considered in for installation check, commissioning, trail run and pg testing for one (1) nos scs. the prices shall be inclusive of charges of travelling, boarding/lodging, medical, insurance etc.		
11. Site certification shall be required in calculation of "cost of service at site" mentioned whether extra stay/ less stay.		
12.In case of non-completion of installation check, commissioning, trail run and PG testing in site visits stipulated at note no. 10 above, for any reasons not attributable to vendor (to be certified by BHEL site), vendor shall complete above activities in subsequent site visits for which cost shall be borne by BHEL on pro-rata basis on price of site visit quoted by bidder.		
13. BOQ mentioned in the spares list (annexure- 1A) is tentative and may vary during the project execution.		

SUGGESTIVE PRICE SCHEDULE:- RATE CONTRACT OF SELF CLEANING STRAINERS (SCS)

BREAK UP FOR SUPPLY, SERVICES AND MANDATORY SPARES — ANNEXURE-1A

Sl. No.		ITEM DESCRIPTION		UOM =DESCRIPTION	UOM	TYPE-1		TYPE-2		TYPE-3	
						QTY.	PRICE	QTY.	PRICE	QTY.	PRICE
1		2		3	4	5	6	7	8	9	10
1.0	MAIN SUPPLY	1.1	Unit Ex-Works Price (for 1 Set of SCS)				Derived		Derived		Derived
		1.2	Quantity (Total Sets of SCS)	Numbers=Nos.	Nos.	4		2		2	
		1.3	Total Ex-Work Price (as per Sl. No 1.1 x 1.2)				Derived		Derived		Derived
		Percentage wise (%) Breakup w.r.t. to Total Ex- works Cost of SCS		PERCENT=%	%		48.10		25.48		26.43
		Total Ex- works Cost of SCS			RS.						
				PERCENT=%	%	100					
2.0	SERVICES AT SITE	CHARGES OF SITE ACTIVITIES (INSTALLATION CHECK, COMMISSIONING, TRAIL RUN AND PG TESTING)									
		2.1	Unit Ex-Works Price (for 1 Set of SCS)				Derived		Derived		Derived
		2.2	Quantity (Total Sets of SCS)			4		2		2	
		2.3	Total Ex-Work Price (as per Sl. No 2.1 x 2.2)				Derived		Derived		Derived
		Percentage wise (%) Breakup wrt to Unit Ex- works Cost of SCS		PERCENT=%	%	4.74		4.48		4.32	
3.0		MANDATORY SPARES		Percentage wise (%) Breakup w.r.t. to Unit Ex- works Cost of SCS (main supply)							
1	MANDATORY SPARES	MEASURING INSTRUMENTS									
1.1		Transmitters of all types and model no. (for measurement of pressure, differential pressure, flow, level, temp, etc.). This shall		10% or 1 no. of each type and model, whichever is more.	LOT	2	75.89				
1.2		PROCESS CONNECTION PIPING (For Impulse Piping / Tubing and Air Supply Piping as Applicable)		5% or 1 no. of each type, model and range, whichever is more.	LOT	2	5.06				
2		PROCESS CONNECTION PIPING (For Impulse Piping / Tubing and Air Supply Piping as Applicable)									
2.1		Valves of all types and models		10% or 1 no. of each type, class, size and model whichever is more.	LOT	2	1.58				
2.2		2 way, 3way, 5way valve manifolds		10% or 1 no. of each type, class, size and model whichever is more.	LOT	2	3.16				
2.3		Fittings		10% or 1 packet of each type, class, size and model whichever is more.	LOT	2	1.58				
2.4		Purge meters		5% of each model or 1 no. whichever is more.	LOT	2	1.58				
2.5		Filter regulators		20% of each model or 2 nos. whichever is more.	LOT	2	1.58				
3		ELECTRICAL ACTUATORS									
3.1		Actuators		1 no of each type and rating	LOT	2	39.53				
3.2		Electronic PCB of all types		10% of each type & model	LOT	2	3.16				
3.3		Absolute Encoder (replaceable part)		5% of each type & model	LOT	2	6.32				
3.4		Electronic Torque sensor		5% of each type & model	LOT	2	15.81				
4		CONTROL PANEL / STARTER PANEL									
4.1		Control supply transformers		2 no. of each type & rating	LOT	2	9.49				
4.2		Ammeters		4 nos. of each type & rating	LOT	2	0.79				
4.3		Voltmeters		2 no. of each type & rating	LOT	2	0.95				
4.4		LEDs		5 nos. of each type & rating	LOT	2	1.58				
4.5		Control switches		2 nos. of each type	LOT	2	0.63				
4.6		Selector switches		2 nos. of each type	LOT	2	0.63				
4.7		Push button (complete with contact elements)		2 nos. of each type & colour	LOT	2	3.16				
4.8		Auxiliary contactors		2 complete sets	LOT	2	3.16				
4.9		Control fuse base with carrier complete set for panel		1 complete sets	LOT	2	0.32				
4.10		Bi-metallic overload relays		2 complete sets of the	LOT	2	1.58				
5		MEASURING INSTRUMENTS									
5.1		All types of local indicators		1 no. of each make, model and type	LOT			1	1.49	1	1.44
5.2		Process Actuated Switch Devices : (All types of Pressure, diff. pressure, flow, temperature, level switch devices).		1 no. of each type and model	LOT			1	2.99	1	2.88
5.3		All type of Electronic Transmitters and Ultrasonic Transmitters including sensors.		10% or 1 no. of each type and model whichever is more.	LOT			1	35.82	1	34.53
5.4		Limit switches for isolation valves		1 no. of each type	LOT			1	0.75	1	0.72
6		PROCESS CONNECTION PIPING (For Impulse Piping / Tubing and Air Supply Piping as Applicable)									
6.1		Valves		1 no. of each type, class, size and model.	LOT			1	0.75	1	0.72
6.2		2 way, 3 way, 5 way valve manifolds		1 no. of each type, class, size and model.	LOT			1	1.49	1	1.44
6.3		Fittings		5% or 1 no. of each type, class, size and model whichever is more.	LOT			1	0.75	1	0.72
7		ELECTRIC ACTUATORS									

7.1		Actuators	1 no of each type and rating	LOT			1	18.66	1	17.99
7.2		Electronic PCB of all types	10% of each type & model	LOT			1	1.49	1	1.44
7.3		Absolute Encoder (replaceable part)	5% of each type & model	LOT			1	2.99	1	2.88
7.4		Electronic Torque sensor	5% of each type & model	LOT			1	5.97	1	5.76
										0.00
8		Filter element		SET	2	18.38	1	10.07	1	10.61
9		Actuators along with motors		SET	2	31.62	1	14.93	1	14.39
10		Debris discharge and other valves		SET	2	15.81	1	7.46	1	7.19
11		Gaskets etc.		SET	2	0.32	1	0.15	1	0.14
12		Nuts and bolts etc		SET	2	1.58	1	0.75	1	0.72
4.0	SERVICES AT SITE (OPTIONAL)	**Per Day Charge for staying extra/ less number of days at site for each type of SCS (in percentage w.r.t Total Ex-Works price of SCS of main supply).**	PERCENT=% (wrt S.No. 1.3)	%	0.3953		0.7463		0.7194	
				Rs.	Derived		Derived		Derived	

ANNEXURE-II: DEVIATION SHEET (COST OF WITHDRAWL)

PACKAGE:- SELF CLEANING STRAINERS- RATE CONTRACT (RC-03)

TENDER ENQUIRY REF NO-RATE CONTRACT - NIT REF NO-PE/PG/RTC/E-6229/2019 dtd 12/06/2019

NAME OF VENDOR:-

SL NO	VOLUME/ SECTION	PAGE NO.	CLAUSE NO.	TECHNICAL SPECIFICATION/ TENDER DOCUMENT	COMPLETE DESCRIPTION OF DEVIATION	COST OF WITHDRAWL OF DEVIATION	REFERENCE OF PRICE SCHEDULE ON WHICH COST OF WITHDRAWL OF DEVIATION IS APPLICABLE	NATURE OF COST OF WITHDRAWL OF DEVIATION (POSITIVE/ NEGATIVE)	REASONS FOR QUOTING DEVIATION
TECHNICAL DEVIATIONS									
COMMERCIAL DEVIATIONS									

PARTICULARS OF BIDDERS/ AUTHORISED REPRESENTATIVE

NAME	**DESIGNATIONS**	**SIGN & DATE**	

NOTES:

1. For self manufactured items of bidder, cost of withdrawl of deviation will be applicable on the basic price (i.e. excluding taxes, duties & freight) only.
2. For directly dispatchable items, cost of withdrawl of deviation will be applicable on the basic price including taxes, duties & freight.
3. All the bidders have to list out all their Technical & Commercial Deviations (if any) in detail in the above format.
4. Any deviation not mentioned above and shown separately or found hidden in offer, will not be taken cognizance of.
5. Bidder shall submit duly filled unpriced copy of above format indicating "quoted" in "cost of withdrawl of deviation" column of the schedule above along with their Techno-commercial offer, wherever applicable
6. Bidder shall furnish price copy of above format along with price bid.
7. The final decision of acceptance/ rejection of the deviations quoted by the bidder shall be at discretion of the Purchaser.
8. Bidders to note that any deviation (technical/commercial) not listed in above and asked after Part-I opening shall not be considered
9. For deviations w.r.t. Payment terms, Liquidated damages, Firm prices and submission of E1/ E2 forms before claiming 10% payment, if a bidder chooses not to give any cost of withdrawl of deviation loading as per Annexure-VIII of GCC, Rev-06 will apply. For any other deviation mentioned in un-priced copy of this format submitted with Part-I bid but not mentioned in priced copy of this format submitted with Priced bid, the cost of withdrawl of deviation shall be taken as NIL.
10. Any deviation mentioned in priced copy of this format, but not mentioned in the un-priced copy, shall not be accepted.
11. All techno-commercial terms and conditions of NIT shall be deemed to have been accepted by the bidder, other than those listed in unpriced copy of this format.
12. Cost of withdrawl is to be given seperately for each deviation. In no event bidder should club cost of withdrawl of more than one deviation else cost of withdrawl of such deviations which have been clubbed together shall be considered as NIL.
13. In case nature of cost of withdrawl (positive/negative) is not specified it shall be assumed as positive.
14. In case of descrepancy in the nature of impact (positive/ negative), positive will be considered for evaluation and negative for ordering.

BHEL / PEM / CMM
SPECIAL CONDITIONS OF RATE CONTRACT

ANNEXURE III TO ENQ. NO. PE/PG/RTC/E-6229/2019 dtd 12/06/2019

SPECIAL CONDITION OF RATE CONTRACT FOR SELF CLEANING STRAINERS

1. BHEL/PEM intends to enter into Rate Contract for supply of the tendered items for a period of two years. The Rate Contract shall come into force from the date of issue of Purchase order for Rate Contract. Validity for ordering shall be two years from the purchase order for Rate Contract.

2. Details of consignee and project site information for dispatch of material shall be intimated at the time of placement of PO for specific project after finalization of RC.

3. Transit Insurance is in BHEL scope.

4. The items will be required against respective projects. Exact quantities and Project information shall be intimated while placing order for a specific project based on the Rate Contract.

5. The prices shall remain firm during the RC period.

6. Items have to be manufactured as per specification and supplied strictly in accordance with the approved BHEL / Customer's Drawings & Quality Plan. The items/ test certificate of items, which for any reason are not acceptable to BHEL / Customer, shall be required to be retested. No extra charge shall be payable on those account by BHEL.

7. Inspection of materials shall be carried out by BHEL/CQA and or by Customer or by an authorized agency at manufacture's works before dispatch, if required. Dispatch of material to be done, only after receipt of BHEL/Customer MDCC. It is responsibility of vendor to for obtain Material Dispatch Clearance Certificate (MDCC) from BHEL or Customer as required before dispatch of material.
   Vendor shall give inspection call on BHEL-CQS web site to applicable inspection agency with a copy of inspection call to BHEL-PEM for arranging Customer participation (if applicable) in inspection / Joint inspection on the proposed date with an advance notice of 15 working days. Inspection charges shall be paid by BHEL-PEM.
   Items have to be manufactured as per specification and supplied strictly in accordance with the approved BHEL / Customer's Drawings & Quality Plan. The items/ test certificate of items, which for any reason are not acceptable to BHEL / Customer, shall be required to be retested. No extra charge shall be payable on those account by BHEL.

8. Mode of dispatch shall be by road through Schedule Bank/BHEL (PEM) approved transporters.

9. Other terms and conditions shall be as per Standard Technical specification, GCC Rev 06 & Corrigenda to GCC Rev 06, Enquiry letter.

10. This enquiry is subject to Conditions/ limits if any imposed in PMD/ Vendor registration.

11. Tentative quantity is given in enquiry.

12. Bidders to submit offer for RC of said items ONLINE via e-Procurement System only. Bidder to upload tender documents complete in all respects duly signed & stamped on each and every page by the authorized signatory of the bidder as a token of acceptance of all the terms and conditions of tender.

13. The Bidder along with its associate/ collaborators/ sub-contractors/ sub-vendor/ consultants/ service providers shall strictly adhere to BHEL Fraud Prevention Policy displayed on BHEL web site http://www.bhel.com and shall immediately bring to the notice of BHEL Management about any fraud as soon as it comes to their notice.

ANNEX-IV TO ENQ. NO. PE/PG/RTC/E-6229/2019 dtd 12/06/2019 TENTATIVE PROJECT LIST	
SL NO.	**TENTATIVE PROJECT LIST**
1	NORTH KARANPURA 3X660 MW
2	MAUDA , 2X500 MW
3	BARH STAGE-II 2X660 MW
4	BARH STAGE-I 3X660 MW
Note- ***Project list is indicative only, BHEL may ask for delivery anywhere in India for any of the project added in the prospective project/ existing projects during RC period.***	

	PRE-QUALIFYING REQUIREMENTS (TECHNICAL) – SELF CLEANING STRAINERS	DOCUMENT NO: PE-TS-RC3-165-N004 REVISION NO: 02 DATE:03/06/2019 SHEET: **1** of **2**

FORM NO. PEM 6100-0

ENQUIRY NO.:

PROJECT: RATE CONTRACT OF SCS TECH SPEC NO: PE-TS-RC3-165-N004 (REV-00)

PACKAGE: SCS

1. The bidder should have designed, manufactured, tested, inspected & supplied the SCS with minimum flow of 300 Cum/hr, which have been successfully in use for at least 1 year in thermal power plant or similar industry/ application and bidder is in business of SCS on continuous basis.

1. The Bidders shall furnish following support documents for assessment of Bidder w.r.t. PQR as indicated at Sl. No. 1 above:

   A. Bidder's Experience list of SCS for last 5 years (as on the enquiry/NIT date) for assessment of bidder for supplying the SCS on regular basis for establishing business continuity in enclosed format- Annexure-1.

      Bidder shall furnish the PO copy of at least one executed Contract as indicated in the experience list.

   B. Bidder shall furnish any one from below in support of successful performance of SCS for one year:

      i. Satisfactory Performance feedback certificates from End Customer (Owner) (in English) for at least one successfully executed contract which has been in use for at least One year indicating salient features like year of commissioning of SCS, rating of project, Size of SCS, project name etc., date of issue of certificate and name/ designation of the certificate issuer for power plant/similar application industry. The date of satisfactory performance feedback certificate should not be later than the date of subject enquiry/NIT.

      OR

      ii. The bidder has been awarded One repeat contract for SCS from End Customer (Owner) / Purchaser (in English) for power plant/similar application industry. Repeat contract shall be considered when the second contract is given by the same purchaser/ owner after lapse of minimum 1 year from execution (viz. commissioning) of first contract. Supporting documents for execution of the first contract like commissioning report or PG test report along with the PO Copy to be furnished, if bidder intends to submit the documents for Repeat Contracts. The date of repeat contract order should not be later than the date of subject enquiry/NIT.

Notes:-

N1 - Purchase order copy, supporting drgs/technical data sheets etc. are to be submitted along with the bid for which the bidder intends to furnish the performance feedbacks / repeat contracts for reference purpose only.

Any additional document required in support of above documents to establish the co-relation between the above documents and the supplied item shall be provided by the bidder.

PREPARED BY:	**REVIEWED BY:**	**APPROVED BY:**
NAME: NISHANT SHEKHAR **DESIGNATION / DEPT.:**	**NAME:AJAY JAIN/ V YADAV** **DESIGNATION / DEPT.:**	**NAME: CHANDAN MAITI** **DESIGNATION / DEPT.:**

	2. Bidder to submit all supporting documents in English, If documents submitted by bidder are in language other than English, a self-attested English translated document should also be submitted.
	3. Notwithstanding anything stated above, BHEL reserves the right to assess the capabilities and capacity of the bidder/collaborators to perform the contract, should the circumstances warrant such assessment in the overall interest of BHEL.
	4. After satisfactory fulfilment of all the above criteria/ requirement, offer shall be considered for further evaluation as per NIT and all the other terms of the tender.

Annexure – A-1

EXPERIENCE LIST

EQUIPMENT/PACAKAGES : SELF CLEANING STRAINER **Vendor :**

.

SL. NO.	PROJECT	CUSTOMER/ CONSULTANTS	YEAR OF SUPPLY	SIZE (MM)	CAPACITY (Cub. M/ Hr)	QTY	MATERIAL OF CONSTRUCTION (HOUSING/STRAINER ELEMENT)	QUALITY OF WATER HANDLED	Performance feedback certificate from end user (enclosed/not enclosed)	

COMPANY SEAL

Annexure-VI

ANNEXURE TO MODEL CONCILIATION CLAUSE FOR CONDUCT OF CONCILIATION UNDER THE BHEL CONCILIATION SCHEME, 2018

BRIEF PROCEDURE FOR CONDUCT OF CONCILIATION PROCEEDINGS

1. The proceedings of Conciliation shall broadly be governed by Part-III of the Arbitration and Conciliation Act 1996 or any statutory modification thereof and as provided herein:

2. The party desirous of resorting to Conciliation shall send an invitation/notice in writing to the other party to conciliate specifying all points of Disputes with details of the amount claimed. The party concerned shall not raise any new issue thereafter. Parties shall also not claim any interest on claims/counter-claims from the date of notice invoking Conciliation till the conclusion of the Conciliation proceedings. If BHEL is to initiate Conciliation, then, the invitation to Conciliate shall be extended to the concerned Stakeholder in **Format 7** hereto. Where the stakeholder is to initiate the Conciliation, the notice for initiation of Conciliation shall be sent in **Format-8** hereto.

3. The party receiving the invitation/notice for Conciliation shall within 30 days of receipt of the notice of Conciliation intimate its consent for Conciliation along with its counter-claims, if any.

4. The Conciliation in a matter involving claim or counter-claim (whichever is higher) up to Rs 5 crores shall be carried out by sole Conciliator nominated by BHEL while in a matter involving claim or counter-claim (whichever is higher) of more than Rs 5 crores Conciliation shall be carried out by 3 Conciliators nominated by BHEL. The appointment of Conciliator(s) shall be completed and communicated by the concerned Department/Group of BHEL Unit/Division/Region/Business Group to the other party and the Conciliator(s) within 30 days from the date of acceptance of the invitation to conciliate by the concerned party in the **Format-9**. The details of the Claim, and counter-claim, if any, shall be intimated to the Conciliator(s) simultaneously in **Format-5**.

5. The Parties shall be represented by only their duly authorized in-house executives/officers and neither Party shall be represented by a Lawyer.

6. The first meeting of the IEC shall be convened by the IEC by sending appropriate communication/notice to both the parties as soon as possible but not later than 30 days from the date of his/their appointment. The hearings in the Conciliation proceeding shall ordinarily be concluded within two (2) months and, in exceptional cases where parties have expressed willingness to settle the matter or there exists possibility of settlement in the matter, the

proceedings may be extended by the IEC by a maximum of further 2 months with the consent of the Parties subject to cogent reasons being recorded in writing.

7. The IEC shall thereafter formulate recommendations for settlement of the Disputes supported by reasons at the earliest but in any case within 15 days from the date of conclusion of the last hearing. The recommendations so formulated along with the reasons shall be furnished by the IEC to both the Parties at the earliest but in any case within 1 month from the date of conclusion of the last hearing.

8. Response/modifications/suggestions of the Parties on the recommendations of the IEC are to be submitted to the IEC within time limit stipulated by the IEC but not more than 15 days from the date of receipt of the recommendations from the IEC.

9. In the event, upon consideration, further review of the recommendations is considered necessary, whether by BHEL or by the other Party, then, the matter can be remitted back to the IEC with request to reconsider the same in light of the issues projected by either/both the Parties and to submit its recommendations thereon within the following 15 days from the date of remitting of the case by either of the Parties.

10. Upon the recommendations by the Parties, with or without modifications, as considered necessary, the IEC shall be called upon to draw up the Draft Settlement Agreement in terms of the recommendations.

11. When a consensus can be arrived at between the parties only in regard to any one or some of the issues referred for Conciliation the draft Settlement Agreement shall be accordingly formulated in regard to the said Issue(s), and the said Settlement Agreement, if signed, by the parties, shall be valid only for the said issues. As regards the balance issues not settled, the parties may seek to resolve them further as per terms and conditions provided in the contract.

12. In case no settlement can be reached between the parties, the IEC shall by a written declaration, pronounce that the Conciliation between the parties has failed and is accordingly terminated.

13. Unless the Conciliation proceedings are terminated in terms of para 22 (b), (c) & (d) herein below, the IEC shall forward his/its recommendations as to possible terms of settlement within one (1) month from the date of last hearing. The date of first hearing of Conciliation shall be the starting date for calculating the period of 2 months.

14. In case of 3 members IEC, 2 members of IEC present will constitute a valid quorum for IEC and meeting can take place to proceed in the matter after seeking consent from the member who is not available. If necessary, videoconferencing may be arranged for facilitating participation of the members. However, the IEC recommendations will be signed by all members. Where there is more than one (1) Conciliator, as a general rule they shall act jointly. In the event of differences between the Members of IEC, the decision/recommendations of the majority of the Members of IEC shall prevail and be construed as the recommendation of the IEC.

15. The Draft Settlement Agreement prepared by the IEC in terms of the consensus arrived at during the Conciliation proceedings between the Parties shall be given by the IEC to both the parties for putting up for approval of their respective Competent Authority.

16. Before submitting the draft settlement agreement to BHEL's Competent Authority viz. the Board Level Committee on Alternative Dispute Resolution (BLCADR) for approval, concurrence of the other party's Competent Authority to the draft settlement agreement shall be obtained by the other party and informed to BHEL within 15 days of receipt of the final draft settlement agreement by it. Upon approval by the Competent Authority, the Settlement Agreement would thereafter be signed by the authorized representatives of both the Parties and authenticated by the members of the IEC.

17. In case the Draft Settlement Agreement is rejected by the Competent Authority of BHEL or the other Party, the Conciliation proceedings would stand terminated.

18. A Settlement Agreement shall contain a statement to the effect that each of the person(s) signing thereto (i) is fully authorized by the respective Party(ies) he/she represents, (ii) has fully understood the contents of the same and (iii) is signing on the same out of complete freewill and consent, without any pressure, undue influence.

19. The Settlement Agreement shall thereafter have the same legal status and effect as an arbitration award on agreed terms on the substance of the dispute rendered by an arbitral tribunal passed under section 30 of the Arbitration and Conciliation Act, 1996.

20. Acceptance of the Draft Settlement Agreement/recommendations of the Conciliator and/or signing of the Settlement Agreement by BHEL shall however, be subject to withdrawal/closure of any arbitral and/or judicial proceedings initiated by the concerned Party in regard to such settled issues.

21. Unless otherwise provided for in the agreement, contract or the Memorandum of Understanding, as the case may be, in the event of likelihood of prolonged absence of the Conciliator or any member of IEC, for any reason/incapacity, the Competent Authority/Head of Unit/Division/Region/Business Group of BHEL may substitute the Conciliator or such member at any stage of the proceedings. Upon appointment of the substitute Conciliator(s), such reconstituted IEC may, with the consent of the Parties, proceed with further Conciliation into the matter either de-novo or from the stage already reached by the previous IEC before the substitution.

22. The proceedings of Conciliation under this Scheme may be terminated as follows:

a. On the date of signing of the Settlement agreement by the Parties; or,

b. By a written declaration of the IEC, after consultation with the parties, to the effect that further efforts at conciliation are no longer justified, on the date of the declaration; or,

c. By a written declaration of the Parties addressed to the IEC to the effect that the Conciliation proceedings are terminated, on the date of the declaration; or,

d. By a written declaration of a Party to the other Party and the IEC, if appointed, to the effect that the Conciliation proceedings are terminated, on the date of the declaration; or,

e. On rejection of the Draft Settlement Agreement by the Competent Authority of BHEL or the other Party.

23. The Conciliator(s) shall be entitled to following fees and facilities:

Sl No	**Particulars**	**Amount**
1	Sitting fees	Each Member shall be paid a Lump Sum fee of Rs 75,000/- for the whole case payable in terms of paragraph No. 27 herein below.
2	Towards drafting of settlement agreement	In cases involving claim and/or counter-claim of up to Rs 5crores. Rs 50,000/- (Sole Conciliator) In cases involving claim and/or counter-claim of exceeding Rs 5 crores but less than Rs 10 crores.

Sl No	Particulars	Amount
		Rs 75,000 (per Conciliator) In cases involving claim and/or counter-claim of more than Rs 10 crores. Rs 1,00,000/- (per Conciliator) Note: The aforesaid fees for the drafting of the Settlement Agreement shall be paid on the, Signing of the Settlement Agreement after approval of the Competent Authority or Rejection of the proposed Settlement Agreement by the Competent Authority of BHEL.
3	Secretarial expenses	Rs 10,000/- (one time) for the whole case for Conciliation by a Sole Member IEC. Where Conciliation is by multi member Conciliators –Rs 30,000/- (one time)- to be paid to the IEC
4	Travel and transportation and stay at outstation Retired Senior Officials of other Public Sector Undertakings (pay scale wise equivalent to or more than E-8 level of BHEL)	As per entitlement of the equivalent officer (pay scale wise) in BHEL.
	Others	As per the extant entitlement of whole time Functional Directors in BHEL. Ordinarily, the IEC Member(s) would be entitled to travel by air Economy Class.
5	Venue for meeting	Unless otherwise agreed in the agreement, contract or the Memorandum of Understanding, as the case may be, the venue/seat of proceedings shall be the location of the

Sl No	Particulars	Amount
		concerned Unit / Division / Region / Business Group of BHEL. Without prejudice to the seat/venue of the Conciliation being at the location of concerned BHEL Unit / Division / Region / Business Group, the IEC after consulting the Parties may decide to hold the proceedings at any other place/venue to facilitate the proceedings. Unless, Parties agree to conduct Conciliation at BHEL premises, the venue is to be arranged by either Party alternately.

24. The parties will bear their own costs including cost of presenting their cases/evidence/witness(es)/expert(s) on their behalf. The parties agree to rely upon documentary evidence in support of their claims and not to bring any oral evidence in IEC proceedings.

25. If any witness(es) or expert(s) is/are, with the consent of the parties, called upon to appear at the instance of the IEC in connection with the matter, then, the costs towards such witness(es)/expert(s) shall be determined by the IEC with the consent of the Parties and the cost so determined shall be borne equally by the Parties.

26. The other expenditures/costs in connection with the Conciliation proceedings as well as the IEC's fees and expenses shall be shared by the Parties equally.

27. Out of the lump sum fees of Rs 75,000/- for Sitting Fees, 50% shall be payable after the first meeting of the IEC and the remaining 50% of the Sitting Fees shall be payable only after termination of the conciliation proceedings in terms of para 22 hereinabove.

28. The travelling, transportation and stay at outstation shall be arranged by concerned Unit as per entitlements as per Serial No. 4 of the Table at para 23 above, and in case such arrangements are not made by the BHEL Unit, the same shall be reimbursed to the IEC on actuals limited to their entitlement as per Serial No. 4 of the Table at Para 23 above against supporting documents. The IEC Member(s) shall submit necessary invoice for claiming the fees/reimbursements.

29. The Parties shall keep confidential all matters relating to the conciliation proceedings. Confidentiality shall extend also to the settlement agreement, except where its disclosure is necessary for purposes of its implementation and enforcement or as required by or under a law or as per directions of a Court/Governmental authority/ regulatory body, as the case may be.

30. The Parties shall not rely upon or introduce as evidence in any further arbitral or judicial proceedings, whether or not such proceedings relate to the Disputes that is the subject of the Conciliation proceedings:

a. Views expressed or suggestions made by the other party in respect of a possible settlement of the Disputes;

b. admissions made by the other party in the course of the Conciliator proceedings;

c. proposals made by the Conciliator;

d. The fact that the other Party had indicated his willingness to accept a proposal for settlement made by the Conciliator.

31. The Parties shall not present the Conciliator(s) as witness in any Alternative Dispute Resolution or Judicial proceedings in respect of a Disputes that is/was the subject of that particular Conciliation proceeding.

32. None of the Conciliators shall act as an arbitrator or as a representative or counsel of a Party in any arbitral or judicial proceeding in respect of a Disputes that is/was the subject of that particular Conciliation proceeding.

33. The Parties shall not initiate, during the Conciliation proceedings, any arbitral or judicial proceedings in respect of a Disputes that is the subject matter of the Conciliation proceedings except that a Party may initiate arbitral or judicial proceedings where, in his opinion, such proceedings are necessary for preserving his rights including for preventing expiry of period of limitation. Unless terminated as per the provisions of this Scheme, the Conciliation proceedings shall continue notwithstanding the commencement of the arbitral or judicial proceedings and the arbitral or judicial proceedings shall be primarily for the purpose of preserving rights including preventing expiry of period of limitation.

34. The official language of Conciliation proceedings under this Scheme shall be English unless the Parties agree to some other language.

Format 5 to BHEL Conciliation Scheme, 2018

STATEMENT OF CLAIMS/COUNTER CLAIMS TO BE SUBMITTED TO THE IEC BY BOTH THE PARTIES

1. Chronology of the Disputes

2. Brief of the Contract/MoU/Agreement/LOI/LOA

3. Brief history of the Disputes:

4. Issues:

5. Details of Clam(s)/Counter Claim(s):

SI. No.	**Description of claim(s)/Counter Claim**	**Amount (in INR)Or currency applicable in the contract**	**Relevant contract clause**

6. Basis/Ground of claim(s)/counter claim(s) (along with relevant clause of contract)

Note– *The Statement of Claims/Counter Claims may ideally be restricted to maximum limit of 20 pages. Relevant documents may be compiled and submitted along with the statement of Claims/Counter Claims. The statement of Claims/Counter Claims is to be submitted to all IEC members and to the other party by post as well as by email.*

FORMAT-7

FORMAT FOR NOTICE INVOKING CONCILIATION CLAUSE BY BHEL FOR REFERRING THE DISPUTES TO CONCILIATION THROUGH IEC

To,

M/s. (Stakeholder's name)

Subject: **NOTICE FOR INVOCATION OF THE CONCILIATION CLAUSE OF THE CONTRACT BY BHEL**

Ref: Contract No/MoU/Agreement/LOI/LOA& date _____.

Dear Sir/Madam,

As you are aware, with reference to above referred Contract/MoU/Agreement/LOI/LOA, certain disputes have arisen, which, in-spite of several rounds of mutual discussions and various correspondences have remained unresolved. The brief particulars of our claims which arise out of the above- referred Contract/MoU/Agreement/LOI/LOA are reproduced hereunder:

Sl. No.	Claim description	Amount involved

As you are aware, there is a provision in the captioned Contract/MoU/Agreement/LOI/ LOA for referring disputes to conciliation.

In terms of Clause ---------of Procedure i.e., Annexure ------ to the Contract/MoU /Agreement / LOI / LOA, we hereby seek your consent to refer the matter to Conciliation by Independent Experts Committee to be appointed by BHEL. You are invited to provide your consent in writing to proceed with conciliation into the above mentioned disputes within a period of 30 days from the date of this letter along with details of counter-claims, if any, which you might have with regard to the subject Contract/ MoU/ Agreement/ LOI/ LOA.

Please note that upon receipt of your consent in writing within 30 days of the date of receipt of this letter by you, BHEL shall appoint suitable person(s) from the BHEL Panel of Conciliators.

This letter is being issued without prejudice to our rights and contentions available under the contract and law.

Thanking you
Yours faithfully

Representative of BHEL

Note: The Format may be suitably modified, as required, based on facts and circumstances of the case.

FORMAT-8

FORMAT FOR NOTICE INVOKING CONCILIATION CLAUSE BY A STAKEHOLDER FOR REFERRING THE DISPUTES TO CONCILIATION THROUGH IEC

To,
BHEL (Head of the Unit/Division/Region/Business Group)

Subject: **NOTICE FOR INVOCATION OF THE CONCILIATION CLAUSE OF THE CONTRACT BY A STAKEHOLDER**

Ref: Contract No/MoU/Agreement/LOI/LOA& date _____.

Dear Sir/Madam,

As you are aware, with reference to above referred Contract/MoU/Agreement/LOI/LOA, certain disputes have arisen, which, in-spite of several rounds of mutual discussions and various correspondences have remained unresolved. The brief particulars of our claims which have arisen out of the above-referred Contract/MoU/Agreement/LOI/LOA are enumerated hereunder:

Sl. No.	Claim description	Amount involved

As you are aware, there is a provision in the captioned Contract/MoU/Agreement/LOI/ LOA for referring inter-se disputes of the Parties to conciliation.

We wish to refer the above-said disputes to Conciliation as per the said Clause of the captioned Contract/MoU/Agreement/LOI/ LOA. In terms of Clause ---------of Procedure i.e., Annexure ------ to the Contract/MoU /Agreement / LOI / LOA, we hereby invite BHEL to provide its consent in writing to proceed with conciliation into the above mentioned disputes within a period of 30 days from the date of this letter along with details of counter-claims, if any, which it might have with regard to the subject Contract/ MoU/ Agreement/ LOI/ LOA and to appoint suitable person(s) as Conciliator(s) from the BHEL Panel of Conciliators.

This letter is being issued without prejudice to our rights and contentions available under the contract and law.

Thanking you
Yours faithfully

Representative of the Stakeholder

Note: The Format may be suitably modified, as required, based on facts and circumstances of the case.

FORMAT-9

FORMAT FOR INTIMATION TO THE STAKEHOLDER ABOUT APPOINTMENT OF CONCILIATOR/IEC

To,

M/s. (Stakeholder's name)

Subject: **INTIMATION BY BHEL TO THE STAKEHOLDER AND CONCILIATOR(S) ABOUT APPOINTMENT OF CONCILIATOR/IEC**

Ref: Contract No/MoU/Agreement/LOI/LOA& date _____.

Sir,

This is with reference to letter dated ---------- regarding reference of the disputes arising in connection with the subject Contract No /MoU/Agreement/LOI/LOA to conciliation and appointment of Conciliator(s).

In pursuance of the said letter, the said disputes are assigned to conciliation and the following persons are nominated as Conciliator(s) for conciliating and assisting the Parties to amicably resolve the disputes in terms of the Arbitration & Conciliation Act, 1996 and the Procedure ---- to the subject Contract ...../MoU/Agreement/LOI/LOA, if possible.

Name and contact details of Conciliator(s)

a) .....

b) .....

c) .....

You are requested to submit the Statement of Claims or Counter-Claims (strike off whichever is inapplicable) before the Conciliator(s) in Format 5 (enclosed herewith) as per the time limit as prescribed by the Conciliator(s).

Yours faithfully,

Representative of BHEL

CC: To Conciliator(s)... for Kind Information please.
Encl: As above

Note: The Format may be suitably modified, as required, based on facts and circumstances of the case.

BANK GUARANTEE FOR PERFORMANCE SECURITY

Bank Guarantee No:

Date:

To

NAME

& ADDRESSES OF THE BENEFICIARY

Dear Sirs,

In consideration of the Bharat Heavy Electricals Limited [1] (hereinafter referred to as the 'Employer' which expression shall unless repugnant to the context or meaning thereof, include its successors and permitted assigns) incorporated under the Companies Act, 1956 and having its registered office at _____ through its Unit at.....(name of the Unit) having awarded to (Name of the Vendor / Contractor / Supplier) having its registered office at_____[2] hereinafter referred to as the 'Contractor/Supplier', which expression shall unless repugnant to the context or meaning thereof, include its successors and permitted assigns), a contract Ref No.....dated .....[3] valued at Rs.....[4] (Rupees ----------)/FC.....(in words.....) for .....[5] (hereinafter called the 'Contract') and the Contractor having agreed to provide a Contract Performance Guarantee, equivalent to .....% (.... Percent) of the said value of the Contract to the Employer for the faithful performance of the Contract,

we, ..., (hereinafter referred to as the Bank), having registered/Head office at ..... and inter alia a branch at ..... being the Guarantor under this Guarantee, hereby, irrevocably and unconditionally undertake to forthwith and immediately pay to the Employer a maximum amount Rs ---------- (Rupees ----------) without any demur, immediately on a demand from the Employer, .
Any such demand made on the Bank shall be conclusive as regards the amount due and payable by the Bank under this guarantee. However, our liability under this guarantee shall be restricted to an amount not exceeding Rs. _____ _____.

We undertake to pay to the Employer any money so demanded notwithstanding any dispute or disputes raised by the Contractor/ Supplier in any suit or proceeding pending before any Court or Tribunal relating thereto our liability under this present being absolute and unequivocal.

The payment so made by us under this Guarantee shall be a valid discharge of our liability for payment thereunder and the contractors/supplier shall have no claim against us for making such payment.

We the .....bank further agree that the guarantee herein contained shall remain in full force and effect during the period that would be taken for the performance of the said Contract and that it shall continue to be enforceable till all the dues of the Employer under or by virtue of the said Contract have been fully paid and its claims satisfied or discharged.

We ..... BANK further agree with the Employer that the Employer shall have the fullest liberty without our consent and without affecting in any manner our obligations hereunder to vary any of the terms and conditions of the said Contract or to extend time of performance by the said Contractor/Supplier from time to time or to postpone for any time or from time to time any of the powers exercisable by the Employer against the said Contractor/Supplier and to forbear or enforce any of the terms and conditions relating to the said Agreement and we shall not be relieved from our liability by reason of any such variation, or extension being granted to the said Contractor/Supplier or for any forbearance, act or omission on the part of the Employer or any indulgence by the Employer to the said Contractor/Supplier or by any such matter or thing whatsoever which under the law relating to sureties would but for this provision have effect of so relieving us.

The Bank also agrees that the Employer at its option shall be entitled to enforce this Guarantee against the Bank as a principal debtor, in the first instance without proceeding against the Contractor and notwithstanding any security or other guarantee that the Employer may have in relation to the Contractor's liabilities.

This Guarantee shall remain in force upto and including..... [6] and shall be extended from time to time for such period as may be desired by Employer.
This Guarantee shall not be determined or affected by liquidation or winding up, dissolution or change of constitution or insolvency of the Contractor/Supplier but shall in all respects and for all purposes be binding and operative until payment of all money payable to the Employer in terms thereof.

Unless a demand or claim under this guarantee is made on us in writing on or before the .....[7]we shall be discharged from all liabilities under this guarantee thereafter.

We, ... BANK lastly undertake not to revoke this guarantee during its currency except with the previous consent of the Employer in writing.
Notwithstanding anything to the contrary contained hereinabove:

a) The liability of the Bank under this Guarantee shall not exceed..... [8]
b) This Guarantee shall be valid up to .....[9]
c) Unless the Bank is served a written claim or demand on or before _____[10] all rights under this guarantee shall be forfeited and the Bank shall be relieved and discharged from all liabilities under this guarantee irrespective of whether or not the original bank guarantee is returned to the Bank.

We, _____ Bank, have power to issue this Guarantee under law and the undersigned as a duly authorized person has full powers to sign this Guarantee on behalf of the Bank.

For and on behalf of
(Name of the Bank)

Dated.....

Place of Issue.....

[1] *NAME AND ADDRESS OF EMPLOYER I.e Bharat Heavy Electricals Limited*

[2] *NAME AND ADDRESS OF THE VENDOR /CONTRACTOR / SUPPLIER.*

[3] *DETAILS ABOUT THE NOTICE OF AWARD/CONTRACT REFERENCE*

[4] *PROJECT/SUPPLY DETAILS*

[5] *BG AMOUNT IN FIGURES AND WORDS*

[6] *VALIDITY DATE*

[7] *DATE OF EXPIRY OF CLAIM PERIOD*

[8] *BG AMOUNT IN FIGURES AND WORDS.*

[9] *VALIDITY DATE*

[10] *DATE OF EXPIRY OF CLAIM PERIOD*

Note:

1. **Units are advised that expiry of claim period may be kept 2/3 months after validity date.**
2. **In Case of Bank Guarantees submitted by Foreign Vendors-**

   a. **From Nationalized/Public Sector / Private Sector/ Foreign Banks (BG issued by Branches in India)** can be accepted subject to the condition that the Bank Guarantee should be enforceable in the town/city or at nearest branch where the Unit is located i.e. Demand can be presented at the Branch located in the town/city or at nearest branch where the Unit is located.

   b. **From Foreign Banks (wherein Foreign Vendors intend to provide BG from local branch of the Vendor country's Bank)**

   b.1 In such cases, in the Tender Enquiry/ Contract itself, it may be clearly specified that Bank Guarantee issued by **any of the Consortium Banks only** will be accepted by BHEL. As such, Foreign Vendor needs to make necessary arrangements for issuance of Counter- Guarantee by Foreign Bank in favour of the Indian Bank (BHEL's Consortium Bank). It is advisable that all charges for issuance of Bank Guarantee/ counter- Guarantee should be borne by the Foreign Vendor. The tender stipulation should clearly specify these requirements.

   b.2 **In case, Foreign Vendors intend to provide BG from** Overseas Branch of our Consortium Bank (e.g. if a BG is to be issued by SBI Frankfurt), the same is acceptable. However, the procedure at **sl.no. b.1** will required to be followed.

   b.3 The BG issued may preferably be subject to Uniform Rules for Demand Guarantees (URDG) 758 (as amended from time to time). In case, of Foreign Vendors, the BG Format provided to them should clearly specify the same.

   b.4 The BG should clearly specify that the demand or other document can be presented in electronic form.

GST related Corrigendum to GCC Rev 06

Clause Ref:	Existing Clause as:	Replaced/ New Clause as:
Clause No.4 of GCTC (General commercial terms and conditions)	**TAXES AND DUTIES** **4.1 EXCISE DUTY** 4.1.1 Seller/ Contractor is required to ensure that excise duty including cess, if any, is quoted as per the existing tariff on the date of the offer and all benefits as per existing rules have been considered. 4.1.2 Excise duty actually incurred by Seller/ Contractor on self-manufactured items alone shall be reimbursed against documentary evidence. Excise duty paid by Purchaser on inputs, bought out items, raw materials and components consigned directly to site from sources other than Seller/ Contractor's factory/ works shall be included by the bidder in the quoted basic price. 4.1.3 If excise duty is paid under protest or dispute, it shall not be reimbursed till the dispute is settled. If the Seller/ Contractor claims/ obtains any refund of the excise duty paid, the same shall be refunded to the Purchaser immediately 4.1.4 Invoice cum Excise duty gate pass (Excise Invoice) should contain the name of the ultimate consignee as per Order/ Contract/ Special Conditions of Contract. 4.1.5 If required by Purchaser, the Seller / Contractor will provide a certificate stating that CENVAT benefit has been availed of on the inputs and the same has been passed on to the Purchaser. 4.1.6 Excise duty shall be paid at actuals against documentary evidence but restricted to the amount and percentage indicated in the Order/ Contract. **4.2 SALES TAX / VALUE ADDED TAX (VAT)** 4.2.1 Central Sales Tax / Value Added Tax shall be reimbursed only if the same is paid by the Seller / Contractor to the respective Govt. authorities on direct sales by the Seller/ Contractor to the Purchaser, meeting all statutory requirements and availing all exemptions/ concessions under the respective Central Sales Tax / Value Added Tax Acts. The offer should clearly indicate CST/ VAT percentage and the total	**TAXES AND DUTIES** **4.1 CGST/SGST/UTGST/IGST** 4.1.1 Seller/ Contractor is required to ensure that CGST/SGST/UTGST/IGST (whichever is applicable) is quoted as per the existing tariff on the date of the offer and all benefits as per existing laws have been considered. 4.1.2 It is the responsibility of the seller/contractor to issue the Tax Invoice strictly as per the format prescribed under the relevant applicable GST law (CGST Act/SGST Act/UTGST Act/IGST Act). Vendor to indicate the proper GSTN Registration/ HSN code in their tax invoice. 4.1.3 The purchaser is registered in the State of Uttar Pradesh vide following GST registration number: **09AAACB4146P2ZC** 4.1.4 Seller/contractor is required to mention the above registration number in their tax invoice unless stated otherwise in NIT/SCC. 4.1.5 CGST/SGST/UTGST/IGST shall be paid at actuals against Tax Invoice but restricted to the amount and percentage in the order/contract

	amount along with concessional form(s), if any. 4.2.2 Purchaser is registered in NOIDA, U.P. vide following Registration Numbers: Central Sales Tax Registration No. : ND – 5341151 w.e.f. 01-07-2006 UP Trade Tax Registration No. : ND – 0345307 w.e.f. 01-07-2006 UP TIN No. : 09765702874 4.2.3 Central Sales Tax/ Value Added Tax shall be reimbursed, as per tariff applicable, but restricted to the percentage and amount shown in the Order/ Contract. If it is shown as included in the quoted price/ not applicable, it will not be reimbursed by the Purchaser. 4.2.4 Purchaser proposes to make sale-in-transit under section 6 (2) (b) of Central Sales Tax Act where goods movement is inter-state. Form-C shall be issued and exchanged against Form-E1/E2 based on quarterly transactions. Seller/Contractor is required to submit his request in the format enclosed at Annexure-VI within 30 days from end of the Quarter, giving State-wise invoice details. 4.2.5 VAT invoices, in format prescribed by the respective State Sales Tax Act, have to be submitted in the name of Nodal Agency specified in Special Conditions of Contract. **4.3 SERVICE TAX** 4.3.1 Service Tax paid by the Service Provider /contractor to the Government authorities directly shall only be reimbursed at actuals against documentary evidence, but restricted to the rate and amount mentioned in the order/contract. The offer should clearly indicate the percentage and the total amount of service tax. 4.3.2 Service provider/Contractor to ensure their registration for “Intended Service” to be provided, before claiming Service tax under the “intended category”. Decision of BHEL shall be final w.r.t. the “Intended category” in which the service will be falling. 4.3.3 If required by the Purchaser, the Service Provider/Contractor will provide a certificate stating that “CENVAT Benefit has been availed of on the input and the	**4.2 OTHER TAXES & LEVIES** 4.2.1 All taxes/duties/Cess other than CGST/SGST/UTGST/IGST shall be deemed to be included in the Ex-Works prices unless specified otherwise by the bidder in the price bid. No variation in other taxes and duties shall be payable by Purchaser. **4.3 CUSTOMS DUTY**

	same has been passed on to the purchaser" or "CENVAT Benefit has not been availed of on the inputs". **4.4 OTHER TAXES & LEVIES** All taxes and duties other than Excise Duty, Sales Tax/ VAT, Service Tax shall be deemed to be included in the Ex-Works prices unless specified otherwise by the bidder in the price bid. No variation in other taxes and duties shall be payable by Purchaser. However, statutory variation in Octroi will be payable extra against documentary evidence. **4.5 CUSTOMS DUTY** 4.5.1 Customs Duty element for imported items as per Special Conditions of Contract shall be included in the Ex-Works prices. No variation in customs duty and exchange rate for imported items shall be payable by Purchaser. 4.5.2 Seller/ Contractor shall arrange for his own import license, if required, since Purchaser will not provide any import license. Therefore, Seller/ Contractor alone shall be responsible for any delay in getting import license or non-availability of the same or completion of other related formalities. Purchaser shall not be responsible for any financial liability, whatsoever, on this account. 4.5.3 Essentiality Certificate or Project Authority Certificate (PAC) as per Import Policy, if required to avail concessional customs duty, shall be clearly specified in the offer. Import content (CIF value in rupees) with list of items, quantity, foreign currency, country of origin etc., shall be submitted by the bidder as part of Price bid. **4.6 DIRECT TAX** 4.6.1 Purchaser shall not be liable towards income tax of whatever nature including variations thereof, arising out of this Order/ Contract, as well as tax liability of the Seller/ Contractor and his personnel.	4.3.1 Customs Duty/IGST/Goods and Services compensation cess under Goods and Services Tax (Compensation to States) Act, 2017 element for imported items as per Special Conditions of Contract shall be included in the Ex-Works prices. 4.3.2 Seller/ Contractor shall arrange for his own import license, if required, since Purchaser will not provide any import license. Therefore, Seller/ Contractor alone shall be responsible for any delay in getting import license or non-availability of the same or completion of other related formalities. Purchaser shall not be responsible for any financial liability, whatsoever, on this account. 4.3.3 Essentiality Certificate or Project Authority Certificate (PAC) as per Import Policy, if required to avail concessional customs duty, shall be clearly specified in the offer. Import content (CIF value in rupees) with list of items, quantity, foreign currency, Country of origin etc., shall be submitted by the bidder as part of Price bid. **4.4 DIRECT TAXES** 4.4.1 Purchaser shall not be liable towards income tax of whatever nature including variations thereof, arising out of this Order/ Contract, as well as tax liability of the Seller/ Contractor and his personnel. 4.4.2 Deductions of Tax at source at the prevailing rates shall be effected by the Purchaser before release of payment, as a statutory obligation, if applicable. TDS certificate will be issued by the Purchaser as per statutory provisions

	4.6.2 Deductions of Tax at source at the prevailing rates shall be effected by the Purchaser before release of payment, as a statutory obligation, if applicable. TDS certificate will be issued by the Purchaser as per statutory provisions.	
	5.0 STATUTORY VARIATION 5.1 If the rates for taxes and duties in respect of the quoted materials and/ or services assumed by the Seller/ Contractor are less than the tariff prevailing at the time of tendering, Seller/ Contractor will be responsible for such under quotations. However, if the rates assumed are higher than the correct rates prevailing at the time of tendering, the difference will be to the credit of the Purchaser. 5.2 Statutory Variations in Excise Duty, Service Tax and Central Sales Tax/ Value Added Tax only on self-manufactured items/ services rendered by vendor himself on the rates prevailing at the time of delivery/ completion in comparison to the date of offer, will be to the account of the Purchaser. No other variations such as on customs duty, exchange rate, minimum wages, prices of controlled commodities, any other input etc. shall be payable by the Purchaser. 5.3 Notwithstanding the above, where the actual completion of the supply occurs beyond the period stipulated in the Order/ Contract or any extension thereof, variations referred to above, will be limited to the rates prevailing on the dates of such agreed completion periods only. For variations after the agreed completion periods, the Seller/ Contractor alone shall bear the impact for the upward revisions and for downward revisions; purchaser shall be given the benefit of reduction in taxes/ duties. This will be without prejudice to the levy of penalty for delay in delivery/ completion schedule. 5.4 Any new tax structure (like Goods & Services Tax) as and when implemented by the Government shall become applicable in addition to or in lieu of existing tax structure.	**5.0 STATUTORY VARIATION** 5.1 Statutory variation for CGST/SGST/UGST/IGST is available provided the actual completion of supply does not occur beyond the period stipulated in the order/contract or any extension (without levy of penalty). 5.2 For variation after the agreed completion periods, the seller/contractor alone shall bear the impact for the upwards revisions and adjust the price in their basic price in such a manner that total price with tax matches with the ex-works with taxes of Purchase Order/Contract. For downward revisions, purchaser shall be given the benefit of reduction in CGST/SGST/UGST/IGST. This will be without prejudice to the levy of penalty for delay in delivery/completion schedule. 5.4 No other variations such as on Custom Duty, exchange rate, minimum wages, prices of controlled commodities, any other input etc. shall be payable by the purchaser.

GST related Corrigendum to GCC Rev 06

Clause 8	**8.0 TRANSPORTATION & FREIGHT CHARGES** 8.1 All dispatches shall be through road carriers approved by Purchaser/ Bank, on freight pre-paid basis. 8.2 Road permit/ entry permit, if required as per law of the State, shall be arranged by Purchaser. 8.3 Freight charges (including Service Tax) shall be payable after delivery of the goods at the project site, on receipt of MRC or receipted LR on pro-rata basis.	8**.0 TRANSPORTATION & FREIGHT CHARGES** 8.1 All dispatches shall be through road carriers approved by Purchaser/ Bank, on freight pre-paid basis. 8.2 Road Permit/E-way bill, if required, will be arranged by Supplier.
	9.0 TERMS OF PAYMENT **9.1 SUPPLY PACKAGES** 9.1.1 Ninety percent (90%) of basic price of materials supplied, as per PO, along with 100% taxes and duties (as applicable), shall be paid against receipt of material at site on pro-rata basis. 9.1.2 Ten percent (10%) of basic price of materials supplied will be released on pro-rata basis after receipt of Material Receipt Certificate (MRC) from project site engineer of Owner/ Purchaser, on submission of all final documents for the packages as detailed below, duly certified by Engg. Deptt. of purchaser, and submission of Form E1/ E2 against Form-C, if applicable. List of packages with required final documents is as per Annexure-X. **9.2 SUPPLY PACKAGES WITH PERFORMANCE GUARANTEE / DEMONSTRATION** **TEST AT SITE IN VENDOR'S SCOPE** 9.2.1 Eighty Five percent (85%) of basic price of materials supplied, as per PO / approved billing schedule, along with 100% taxes and duties (as applicable), shall be paid against receipt of material at site on pro-rata basis. 9.2.2 Ten percent (10%) of basic price of materials supplied will be released on pro-rata basis after receipt of Material Receipt Certificate (MRC) from project site engineer of Owner/ Purchaser and submission of Form E1/ E2 against Form-C, if applicable. 9.2.3 Five percent (5%) of the total basic price of materials and PG/ Demonstration test charges shall be released after submission of all final documents as per Technical	**9.0 TERMS OF PAYMENT** **9.1 SUPPLY PACKAGES** Payment of basic price of materials supplied alongwith freight and taxes and duties (as applicable), shall be paid against receipt of material at site on pro-rata basis. 10% of basic price of materials supplied will be retained as security deposit which will be released on pro – rata basis after receipt of Material Receipt Certificate (MRC) from project site engineer of owner/purchaser on submission of all the final documents for the packages as detailed below, duly certified by engineering department of purchaser. List of packages with required final documents is as per Annexure-X. **9.2 Supply packages with performance guarantee/demonstration test at site in vendor's scope** Payment of basic price of materials supplied, as per PO/ as per approved billing schedule, along with freight and taxes and duties (as applicable), shall be paid against receipt of material at site on pro-rate basis. 15% of basic price of materials supplied will be retained as security deposit which will be released on pro – rata basis as details below: a) 10% will be released after receipt of Material Receipt Certificate (MRC) from project site engineer of owner/purchaser.

	Specifications and successful completion of the Performance Guarantee (PG)/ Demonstration Test at site. Note: If the Performance Guarantee/ Demonstration Test is not conducted up to 24 months from supply completion for reasons not attributable to the vendor, then last 5% payment will be released against Bank Guarantee of an equivalent amount, valid for 12 months. This bank guarantee will be in addition to Contract Performance Bank Guarantee for 10% of the contract value (excluding taxes, duties and freight). **9.3 SUPPLY PAYMENT FOR TURNKEY PACKAGES (E&C IN VENDOR'S SCOPE)** 9.3.1 Eighty Five percent (85%) of basic price of materials supplied, as per approved billing schedule, along with 100% taxes and duties (as applicable), shall be paid against receipt of material at site on pro-rata basis. OR i) Five percent (5%) lump sum payment of total basic price (excluding taxes, duties & freight) against approval of design documents and quality plan as certified by Engineering. Design documents and quality plan shall be as defined in the Technical Specifications. ii) Eighty percent (80%) of basic price of materials supplied, as per approved billing schedule, along with 100% taxes and duties (as applicable), shall be paid against receipt of material at site on pro-rata basis. 9.3.2 Five percent (5%) of basic price of materials supplied along with freight, if applicable, will be released on pro-rata basis after submission of Material Receipt Certificate (MRC) from project site engineer of Owner/ Purchaser and submission of Form E1/ E2 against Form-C, if applicable. Collection of Material Receipt Certificate from Site/ Owner and its submission for claiming the payment shall be the responsibility of the Seller/ Contractor. 9.3.3 Ten percent (10%) of the total basic price shall be released after i) submission of all final documents as per Technical Specifications and ii) successful completion of	b) 5% will be released after submission of final documents as per technical specification and successful completion of the performance guarantee (PG)/ Demonstration test at site. Note: If the Performance Guarantee/ Demonstration Test is not conducted up to 24 months from supply completion for reasons not attributable to the vendor, then 5% security deposit will be released against Bank Guarantee of an equivalent amount, valid for 12 months. This bank guarantee will be in addition to Contract Performance Bank Guarantee for 10% of the contract value (excluding taxes, duties and freight). **9.3 SUPPLY PAYMENT FOR TURNKEY PACKAGES (E&C IN VENDOR'S SCOPE)** 9.3.1 Payment of basic price of materials supplied, as per approved billing schedule, along with freight, taxes and duties (as applicable), shall be paid against receipt of material at site on pro-rata basis. 15% of basic price of materials supplied will be retained as security deposit which will be released on pro – rata basis as details below: a) 5% will be released on pro-rata basis after submission of Material Receipt Certificate (MRC) from project site engineer of owner/purchaser. Collection of Material Receipt Certificate from site/owner and its submission for claiming the payment shall be the responsibility of the Seller/Contractor. b) 10% will be released after i) submission of all final documents as per Technical Specifications and ii) successful completion of Performance Guarantee (PG)/ Demonstration Test and handing over of the system/ package, if applicable, as per Order/ Contract

	Performance Guarantee (PG)/ Demonstration Test and handing over of the system/ package, if applicable, as per Order/ Contract. **9.4 ERECTION & COMMISSIONING PAYMENT FOR TURNKEY PACKAGES** 9.4.1 Eighty percent (80%) payment on pro-rata basis for the work completed, as per approved billing schedule, shall be released by Site authorities/ Region on submission of protocols, duly signed by BHEL Site/ Owner. 9.4.2 Ten percent (10%) of the total value shall be released by Site authorities/ Region on successful commissioning of the complete system/ package. 9.4.3 Ten percent (10%) of the total value shall be released by Site authorities/ Region on successful completion of PG/ Demonstration test(s) and handing over system/ package to the Owner, as applicable. **9.5 PG TEST, INSTALLATION CHECK, SUPERVISION OF ERECTION / COMMISSIONING CHARGES** 100% payment shall be released after successful completion of the activity, on Site certification. **9.6 Vendors shall submit documents for payment directly to BHEL. Payment will be released within 60 days after receipt of complete documents as per order/ contract (45 days for vendors qualified and registered as Micro or Small as per MSMED Act).** To be eligible for payment as Micro and Small category, vendors shall submit annual certification for validation from designated authority under MSMED Act or Chartered Accountant within first quarter of every financial year. . **<u>Note:</u>** 1) For indigenous suppliers, if the documents are routed through Bank, then all bank charges will be to vendor's account. 2) Foreign bidders can opt for payment (less agency commission, if applicable) through irrevocable and unconfirmed letter of credit. In that case for	**9.4 ERECTION & COMMISSIONING PAYMENT FOR TURNKEY PACKAGES** 9.4.1 Eighty percent (80%) payment on pro-rata basis for the work completed, as per approved billing schedule, shall be released by Site authorities/ Region on submission of protocols, duly signed by BHEL Site/ Owner. 9.4.2 Ten percent (10%) of the total value shall be released by Site authorities/ Region on successful commissioning of the complete system/ package. 9.4.3 Ten percent (10%) of the total value shall be released by Site authorities/ Region on successful completion of PG/ Demonstration test(s) and handing over system/ package to the Owner, as applicable. **9.5 PG TEST, INSTALLATION CHECK, SUPERVISION OF ERECTION / COMMISSIONING CHARGES** 100% payment shall be released after successful completion of the activity, on Site certification. **9.6 Vendors shall submit documents for payment directly to BHEL. Payment will be released within 60 days after receipt of complete documents as per order/ contract (45 days for vendors qualified and registered as Micro or Small as per MSMED Act).** **<u>Note:</u>** 1) Vendors are required to issue Tax Invoice inclusive of PVC value (if applicable) wherever indices are available. 2) For indigenous suppliers, if the documents are routed through Bank,

	evaluation purpose, prices of foreign bidders will be loaded on account of payment through LC, equal to loading specified against 'Payment through Bank' in Annexure-VIII. No loading will be done if foreign vendors agree for 90 days usance LC or submit the documents on collection basis for payment within 90 days of submission of complete documents. 3) LC opening/ negotiation/ confirmation charges will be to vendor's account. 4) Form C/ E1/E2 are not applicable for foreign bidders. 5) In extreme case of vendors not agreeing to link 10% payment with submission of Form E1/ E2 against Form-C as above, their prices will be loaded as per Annexure-VIII. 6) Any negative PVC, if not adjusted in earlier payments, will be adjusted at the time of MRC payment. **7)** Payment terms for mandatory spares shall be as per clause 9.1.	then all bank charges will be to vendor's account. 3) Foreign bidders can opt for payment (less agency commission, if applicable) through irrevocable and unconfirmed letter of credit. In that case for evaluation purpose, prices of foreign bidders will be loaded on account of payment through LC, equal to loading specified against 'Payment through Bank' in Annexure-VIII. No loading will be done if foreign vendors agree for 90 days usance LC or submit the documents on collection basis for payment within 90 days of submission of complete documents. 4) LC opening/ negotiation/ confirmation charges will be to vendor's account. **5)** Payment terms for mandatory spares shall be as per clause 9.1. 9.7 The applicable TDS under CGST/SGST/UGST/IGST/ Goods and Services (Compensation to States) Act will be deducted from the payments. **9.8 Other clauses** 1. Vendor/Supplier will intimate & upload the Tax invoice along with LR/RR(as applicable) on web portal & intimate BHEL immediately on removal of goods from vendor/supplier works. In case of Services, Vendor is required to upload the Tax invoice on Web Portal immediately after raising the invoice. BHEL will issue the delivery order/instruction to dispatch the material to the customer as indicated in SCC. 2. All payments against Tax Invoice to vendors/contractors shall be released only after:

		a) Vendor/contractor declaring such invoice in GSTR-1 within the prescribed timeline as per the relevant Act. b) The tax component charged by the vendor in the invoice should be matched with the details uploaded by vendor in GSTR-1. c) Confirmation of payment of GST thereon by vendor on GSTN portal 3. In case, any GST credit is delayed/denied to BHEL due to non/delayed receipt of goods and/or tax invoice or expiry to timeline prescribed in the relevant Act for availing such ITC, or any other reasons not attributable to BHEL, tax amount shall be recoverable from the vendor/contractor along with interest levied/leviable on BHEL. 4. Wherein GST liability arises on BHEL under reverse charge, any interest levied/leviable due to any reasons not attributable to BHEL shall be recovered from the vendor/contractor.
Clause 9	**9.7 DOCUMENTS TO BE SUBMITTED BY VENDOR** **9.7.1 For Recognition of Dispatch** Copy of the following documents by e-mail/ fax immediately on despatch: a. Invoice b. LR along with Delivery Order c. Packing List d. Insurance Intimation e. Dispatch Clearance 9.7.2 For Claiming Payments (under clause 9.1.1, 9.2.1, 9.3.1): a. Invoice – original+1 copy b. Receipted LR (signed & stamped)/ confirmation from site regarding receipt of packages/ Boxes original/ copy	9.7 All same a. to be replaced with “GST compliant invoice” in 9.7.1, 9.7.2, 9.7.3 Modification in the clause **Duty drawback documents** “As per applicable law” (original+1 copy.)

	c. Delivery order- 2 copies d. Packing List - clearly showing number of packages, gross weight and net weight. - original+1 copy e. MDCC from BHEL/ Customer – as per SCC – 2 copies f. Guarantee Certificate – Original + 1 copy g. Insurance Intimation - 2 copies CQIR / Inspection Reports – Original+1 copy i. PVC Calculation and copy of all applicable indices, if PVC applicable. – 2 copies j. Duty drawback documents (original excise invoice, original disclaimer certificate, original certificate from excise authority for payment of excise duty), if applicable. – original + 1copy 9.7.3 For Claiming Freight Payment a. Invoice – Original + 1 copy b. Receipted LR (signed & stamped)/ confirmation from site regarding receipt of packages/ Boxes original/ copy c. Transporter's document indicating the freight amount. Original money receipt to be submitted if required as per SCC. 9.7.4 For Claiming MRC Payment a. Invoice – Original + 1 copy b. Copy of MRC 9.7.5 For Claiming Payment for Services involving Service Tax a. Invoice as per rule 4A of Service Tax Act – Original + 1 copy b. Copy of Service Tax registration certificate c. Copy of challan for Service Tax payment	
Clause 3.0 Instruction to bidders	Total **erection & commissioning charges** including service tax should be minimum 20% (or as specified in NIT) of the total quoted package price (excluding mandatory spares but including all taxes and freight), failing which the break-up of prices shall be adjusted accordingly for ordering.	Total **erection & commissioning charges** including applicable tax but excluding freight along with GST should be minimum 20% (or as specified in NIT) of the total quoted package price (excluding mandatory spares but including all taxes and freight), failing which the break-up of prices shall be adjusted accordingly for ordering.

GST related Corrigendum to GCC Rev 06

Clause 16.0 Instruction to bidder	For deviations w.r.t. Payment terms, Liquidated damages, Firm prices and submission of E1/ E2 forms before claiming 10% payment, if a bidder chooses not to give any cost of withdrawl of deviation loading as per Annexure-VIII will apply.	For deviations w.r.t. Payment terms, Liquidated damages, Firm prices before claiming 10% payment, if a bidder chooses not to give any cost of withdrawl of deviation loading as per Annexure-VIII will apply.
Clause 16.0 of GCTC	Purchaser reserves the right to recover from the Seller/ Contractor, as agreed liquidated damages and not by way of penalty, a sum equivalent to half (½) percent of the total contract price per week or part thereof, subject to a maximum of ten (10) percent of the total contract price excluding elements of taxes, duties and freight, if the Seller/ Contractor fails to deliver any part of the ordered stores within the period stipulated in the Order/ Contract. For Turnkey packages (Supply and E&C in vendor's scope), Liquidated Damages shall be levied on the total contract value of both Supply and E&C orders (excluding taxes, duties and freight) if E&C completion of the package is delayed beyond the contractual completion date or extension thereof. Liquidated Damages will not be withheld from supply payment. LR/ GR/ RR date for indigenous supplies and AWB/ BL date for FOB contracts shall be treated as the date of dispatch for levying LD as per Clause 16. However, for indigenous supply if receipted LR date is beyond three months from the date of LR, such excess period shall also be considered for LD purpose. 2. In case of any amendment/ revision, LD shall be linked to the amended/ revised contract value and delivery date(s)	Purchaser reserves the right to recover from the Seller/ Contractor, as agreed liquidated damages and not by way of penalty, a sum equivalent to half (½) percent plus applicable GST of the total contract price per week or part thereof, subject to a maximum of ten (10) percent of the total contract price excluding elements of taxes, duties and freight, if the Seller/ Contractor fails to deliver any part of the ordered stores within the period stipulated in the Order/ Contract. For Turnkey packages (Supply and E&C in vendor's scope), Liquidated Damages shall be levied on the total contract value of both Supply and E&C orders (excluding taxes, duties and freight) if E&C completion of the package is delayed beyond the contractual completion date or extension thereof. Liquidated Damages will not be withheld from supply payment. LR/ GR/ RR/ eway bill date for indigenous supplies and AWB/ BL date for C&F contracts shall be treated as the date of dispatch for levying LD as per Clause 16. However, for indigenous supply if receipted LR/eway bill date is beyond three months from the date of LR/e-way bill, such excess period shall also be considered for LD purpose. 2. In case of any amendment/ revision, LD shall be linked to the amended/ revised contract value and delivery date(s)

GST related Corrigendum to GCC Rev 06

Deviation sheet- Cost of Withdrawal	Point no-9 For deviations w.r.t. Payment terms, Liquidated damages, Firm prices and submission of E1/ E2 forms before claiming 10% payment, if a bidder chooses not to give any cost of withdrawl of deviation loading as per Annexure-VIII of GCC, Rev-06 will apply. For any other deviation mentioned in un-priced copy of this format submitted with Part-I bid but not mentioned in priced copy of this format submitted with Priced bid, the cost of withdrawl of deviation shall be taken as NIL.	For deviations w.r.t. Payment terms, Liquidated damages, Firm prices before claiming 10% payment, if a bidder chooses not to give any cost of withdrawal of deviation loading as per Annexure-VIII of GCC, Rev-06 will apply. For any other deviation mentioned in un-priced copy of this format submitted with Part-I bid but not mentioned in priced copy of this format submitted with Priced bid, the cost of withdrawal of deviation shall be taken as NIL.
Annexure-VI		Deleted
Annexure-VIII		Following changes in annexure-8, (remaining portion of annex-8 is same): C) LIQUIDATED DAMAGES If maximum limit asked for is 10% or 5% of Undelivered Portion – 10% value of the total quoted price including GST & freight. If maximum limit asked is less than 10 % of contract value loading shall be to the extent to which not agreed by bidder (at offered value) . ~~E) DEVIATION TO SUBMISSION OF FORM-E1/ E2 BEFORE CLAIMING 10% PAYMENT~~ ~~10% of Ex-Works supply value.~~

New clauses:

a) In case of discrepancy in CGST/SGST/UTGST/IGST rate corresponding to HSN ;code and quotes rates, the evaluation shall be done on quoted price and correct CGST/SGST/UTGST/IGST rate shall be considered for ordering (limited to quoted FOR Site Price)
b) The bidder should have been registered with the appropriate authority under relevant GST laws.
c) The bidder to specify in their offer (part 1 bid) the category of registration under GST i.e. registered dealer and composite dealer
d) No CGST/SGST/UTGST/IGST will be reimbursed to composite dealer. In the event of any GST quoted by composite dealer, the same shall be considered for evaluation purpose. However, the ordering will be done without considering the tax.
e) In the event of any change in the status of vendor from composite to regular dealer after the submission of the bid but before the supply, no reimbursement of CGST/SGST/UTGST/IGST will be made. However, the vendor has to raise the invoice strictly, as per the law, by adjusting their ex-works price.

TECHNICAL SPECIFICATION

FOR

RATE CONTRACT OF

SELF CLEANING STRAINERS (SCS)

Specification No.: PE-TS- RC3-165-N004 Rev 00

BHARAT HEAVY ELECTRICALS LIMITED
POWER SECTOR
PROJECT ENGINEERING MANAGEMENT
PPEI BLDG., SEC-16A, PLOT NO. 25
NOIDA – 201301 (UP)

INDEX

THIS TECHNICAL SPECIFICATION CONSISTS OF FOLLOWING SECTIONS:

CONTENTS

SECTION	TITLE
I	Specific Technical Requirements
IA	Specific Technical Requirements (Mechanical)
IB	Specific Technical Requirements (Elec.)
IC	Specific Technical Requirements (C&I)
ID	Data Sheet – A
II	Standard Technical Specifications
IIA	Standard Technical Specifications (Mechanical)
IIB	Standard Technical Specifications (Elec.)
IIC	Standard Technical Specifications (C&I.)
III	Documents to be submitted by Bidder
IIIA	Guarantee Schedule (To be submitted along with the Bid by all Bidders)
IIIB	Compliance Certificate (To be submitted along with the Bid by all Bidders)
IIIC	Data Sheet – B (To be submitted by successful Bidder after award of Contract)

SECTION - I

SPECIFIC TECHNICAL REQUIREMENTS

SUB-SECTION IA - Specific Technical Requirements (Mech.)
SUB-SECTION IB - Specific Technical Requirements (Electrical)
SUB-SECTION IC - Specific Technical Requirements (C & I)
SUB-SECTION ID – Datasheet-A

SUB-SECTION – IA

SPECIFIC TECHNICAL REQUIREMENTS (MECHANICAL)

1.0 GENERAL

1.1 This specification is intended for finalization of rate contract between BHEL PEM and Bidder. Standard technical detail as indicated in the specification shall be agreed upon between BHEL PEM and Bidder. Project specific technical detail shall be made available to the bidder along with project enquiry.

1.2 This enquiry covers the design, manufacture, assembly, inspection and testing at manufacturer's and/or his sub-contractors works, proper packing for delivery installation checks, commissioning, Trail run and PG test for Self-Cleaning Strainer with mandatory spares complete with all accessories as per the requirements specified in this specification.

The Self Cleaning Strainer (SCS) complete with all accessories shall conform to the standard technical specifications (Section-II) and Data Sheet-A enclosed herewith. In addition, the requirements of this section I including customer specification attached (as applicable) shall also be complied with. However, wherever the details given in Section-II and Data Sheet-A are different, the requirements of Data Sheet-A shall prevail. Similarly, in the event of contradictions between Section-I/ customer specification (Annexure-IV) / Section-II/ Data Sheet-A, the same shall prevail in the order as: customer specification, Section-I, Datasheet-A, Section-II.

Section I consists of 4 Sub-Sections viz. Sub-Sec. IA, IB and IC for Mechanical, Electrical and C&I respectively and Sub-Section ID for Datasheet-A, the requirements of all 4 subsections shall be complied with.

NOTE: - The specification is made with the intent of entering Rate Contract for the Supply, Commissioning, Trail run and PG test of Self Cleaning Strainer for various projects time to time.

List of Self Cleaning Strainer for various water Application:

a) For clarified water Application:

i) TYPE-1 Flow= 280 CUM/HR, SIZE= 200 NB
ii) TYPE-2 Flow= 450 CUM/HR, SIZE= 250 NB
iii) TYPE-3 Flow= 600 CUM/HR, SIZE= 300 NB

Bidder to note that flow of SCS for various sizes may vary during detail engineering up to (+/-) 5%. Same shall be informed during project specific order. However maximum possible design parameters are indicated in the respective datasheet of each type in Section- ID of this specification. No commercial implication shall be applicable for the same.

1.3 The omission/ addition of specific reference to any component / accessory necessary for the proper performance of the equipment's shall not relieve the supplier of the responsibility of providing such facilities to complete the supply within the quoted prices.

1.4 The bids shall be evaluated as per NIT. Ordering shall be done separately for each project.

1.5 Bidder to quote for items as per price schedule attached in NIT. The quantity as mentioned in the BOQ is only for evaluation purpose. However actual ordered quantity may vary from project to project throughout the year.

2.0 DESCRIPTION OF EQUIPMENTS:

SELF CLEANING STRAINER (SCS).

The Self Cleaning Strainer (SCS) is intended to prevent accumulation of debris in ACW Pipeline. The water through the self cleaning strainers outlet shall be supplied to the Secondary side of Plate Heat Exchangers. The water analysis is indicated with Datasheet-A.

3.0 SCOPE OF SUPPLY UNDER THE SPECIFICATION IN THE BIDDER'S SCOPE FOR SELF CLEANING STRAINER (SCS).

3.1 The details of SCS with quantities, design parameters, size and MOC's as per Data Sheet-A.

3.2 SCOPE OF SUPPLY IN THE BIDDER'S SCOPE FOR SELF CLEANING STRAINER:

3.2.1 Each set of SCS shall comprise as following:

a) Flushing pump with drive Motor (if required) - 1 No.

b) **For Clarified Water: -** Supply of complete interconnecting pipe (as applicable) and debris disposal pipe work including flanges/counter flanges, bends, fittings, supports, gaskets, fasteners etc. shall be in scope of Bidder. However, bidder is to consider debris disposal pipe length and no. of bends as per the list of BOQ mentioned in Data-Sheet A to this Section. In case actual piping comes out to be less than the BOQ of Data Sheet-A, still bidder has to supply the same as minimum requirement. Bidder shall finalize the pipework to suit the layout at contract stage in such a way that minimum site welding is required for pipework by purchaser at site.

c) Filter body/ housing Vent and drain connections along with their isolating valves.

d) Length of Self Cleaning Strainer, complete with bolts, nuts and gaskets shall be as per Data Sheet-A. Thickness of body flange shall be as per BS 4504/ equivalent standard.

e) Differential pressure measuring system for Self-Cleaning Strainer. DP measuring system shall comprise of 2 Nos. DPT + 1 No. DPG for each SCS and shall be with Remote seal arrangement. Stubs for DPT and DPG shall be independent.

f) The Electrical & C&I items/ accessories as specified in succeeding clause/respective sections herein.

g) Starter Panel (Switch Gear Panel) shall be as follows:

2 Sets of Self Cleaning Strainer shall have one Common Starter Panel (Switch Gear Panel) for DCS based control system. Switch Gear Panel should have suitable arrangement like Bus Coupler for providing redundancy to incoming supply feeder (1Working + 1 Standby feeder).

h) Power and Control cables between Starter Panel and various drives in bidder's scope of supply. Refer note at electrical scope between BHEL and Vendor in section IB.

i) All the field instruments stipulated in this specification shall be in Bidder's scope.

j) Set of commissioning spares, on "As required basis".

k) Set of mandatory spares as indicated in Data Sheet A.

l) Supporting arrangement complete with saddle support, foundation plates, anchor bolts, nuts, sleeves, inserts, all installation materials, fixing bolts, clamps and other accessories etc. for complete equipment supplied under this package.

m) Finish paints for touch up painting of equipment after erection at site, in sealed containers.

n) Set of special tools and tackles if required for maintenance and erection of the equipment supplied.

o) Various drawings, data test reports/ certificates instruction manuals for erection operation and maintenance etc. as specified in Data Sheet-C and cables schedule indicating BOQ for power & control cables.

p) Panels & Instruments: Scope and Type as specified in C&I section wherever required.

Any item not specified but required to make SCS complete package shall also be in bidder's scope.

4.0 SCOPE OF SERVICES INCLUDED IN THE BIDDER'S SCOPE :

The bidder's scope also includes following services at site, for scope under this specification for Self-Cleaning Strainer:

a) Installation checks (Erection in BHEL's scope).
b) Commissioning of equipment.
c) Trial run for requisite period
d) Performance Guarantee Testing.

The trial run & PG Test of equipment shall be generally conducted immediately after commissioning. These activities for different units shall be timed separately.

- **For drawings/documents approval**
  In the event of order all drawings / documents in soft as well as hard copy shall be submitted as per Cl. No. 10.0.

  Further on receipt of Customer comments, if required bidder's engineer shall visit BHEL/ Customer along with soft copy to resolve all issues and incorporate comments in the soft copy for across the table finalization and Category-I approval.

- **Site Visits for installation check / commissioning/ trail run/PG Test:**

  Bidder to include cost of two site visits for four days each for installation check, commissioning, trial run and PG testing in their base price.

  In case of non-completion of above activities in site visits stipulated above, for any reasons not attributable to vendor, vendor shall complete above activities in subsequent site visits for which cost shall be borne by BHEL on pro-rata basis on price of site visit quoted by bidder in price schedule.

5.0 EXCLUSIONS:

The following are excluded from the bidder's scope.

5.1 Civil foundation works required for installation

5.2 Erection of Equipment at site.

6.0 DESIGN CONSTRUCTION:

In addition to the requirements of Section-IIA the following shall also be complied.

6.1 Layout Piping Arrangement Drg. is enclosed in the specifications at Annexure-III of Datasheet-A.

6.2 Thickness of body flange and counter flange of SCS shall be as per BS 4504/ equivalent standard.

6.3 The materials of construction specified in Data Sheet-A are minimum requirements and materials of construction for other components not specified shall be similarly selected by the bidder for the intended duty which shall be subject to purchaser's approval during detailed engineering in the event of order.

6.4 Housing/ body of SCS shall be designed and manufactured as per the applicable codes for pressure vessels and to take care of force and moments as enclosed in the specification. However, in no case thickness of housing/ body shall be less than connecting pipe thickness as specified in Data Sheet-A of Self Cleaning Strainer.

6.5 Adequate provision for future installation of Cathodic Protection for Self-Cleaning Strainer (Sacrificial type) shall be kept by the bidder in the equipment.

6.6 Velocity in the pipe work shall be less than 1.5 m/ sec for pump suction and less than 2.0 m/ sec. in other pipe work. All valves upto 150 NB shall be ball valves. For higher sizes, gate/ globe/ B.F. valves shall be provided. All instrument valves shall be needle valves.

7.0 Performance Guarantee for SCS.

Performance Guarantee Parameters shall be as under:

- Max. Pressure drop in Self-Cleaning Strainer in clean condition (Test to be conducted along with commissioning) – not exceeding 1.0 MWC. The Bids shall be technically rejected for pressure drop quoted higher than 1.0 MWC.

Any deviation to above pressure drop will not be accepted.

In case the successful bidder fails to demonstrate above parameter, he shall carry out modifications at his own cost, to purchaser's approval.
In case bidder fails to demonstrate above parameter to purchaser's satisfaction even after modification carried by him at site, the purchaser has the right to reject the equipment out rightly and bidder is liable to resupply the equipment meeting the

contractual performance parameters within time period mutually agreed upon without any cost implication to BHEL/Customer.

8.0 SPARES:

8.1 Mandatory Spares

Mandatory Spares shall be as per Data Sheet-A or annexure enclosed with data sheet A.

9.0 Quality Plan

Bidder shall submit QP in the event of order based on the guidelines given in the specification & QP enclosed therein. QP will be subject to BHEL/ Customer approval and customer hold points for inspection/ testing shall be marked in the QP at the contract stage. Inspection/ testing shall be witnessed as per same apart from review of various test certificates/ Inspection records etc. Charges for 3rd party inspection (TUV/ equivalent) for imported components wherever required shall be included by bidder in the base price itself.
If BHEL or BHEL customer decides to witness the tests along with third party, the cost of travel of BHEL or BHEL customer shall be borne by BHEL or BHEL customer themselves.

10.0 DELIVERY & DRAWINGS/ DOCUMENTS DISTRIBUTION SCHEDULE:

a. Delivery of Equipment shall be as per NIT.

b. The drawings to be submitted by bidder in event of award of contract:

- Technical Data Sheets, P&ID, Installation Plan.
- GA drawings, Details of Flushing Skid (if any) and C& I Document (Part-I & II) of SCS as applicable.
- Quality Plan.
- O & M Manual.

c. Drawings submission schedule after the award of contract shall be as below:

PACKAGE	BHEL DRG NO	DRG TITLE	Drg Sch for Vendors
SELF CLEAING STRAINER	Primary Documents:		
	PE-V4-XXX-165-N001	P&ID - OF SCS SYSTEM	R-0 within 20 days (for all except Installation plan, for Installation Plan 30 Days) from LOI/PO & subsequent revisions within 10 days of comments received from BHEL.
	PE-V4-XXX-165-N002	TECHNICAL DATA SHEET-SCS	
	PE-V4-XXX-165-N003	INSTALLATION PLAN- SCS	
	PE-V4-XXX-165-N004	GENERAL ARRANGEMENT OF SCS	
	PE-V4-XXX-165-N006	C&I Part-I, PANEL-TDS, I/O LIST, CABLE SCH AND CONTROL PHILOSPHY FOR SCS	

	PE-V4-XXX-165-N007	GA & WIRING DIAGRAM OF PANEL- SCS	
	PE-V4-XXX-165-N008	QP- SCS	
	PE-V4-XXX-165-N005	GA OF FLUSHING PUMP & FOUNDATION DETAILS OF FLUSHING PUMP AND SADDLE SUPPORT (If Applicable)	R-0 within 10 days from Cat-I(or)II approval of TDS & subsequent revisions within 10 days of comments received from BHEL.
	Secondary Documents:		
	PE-V4-XXX-165-N009	O&M MANUAL-SCS	Within 30 days from MDCC

11.0 The makes of various bought out items shall be subjected to approval of Customer/ BHEL in the event of order.

12.0 It is mandatory for the bidders to submit along with the bid the deviations if any whether major or minor in the schedule of deviations only. ***In the absence of deviations listed in the schedule of deviations the offer shall be deemed to be in full conformity with the specification "non-withstanding" anything else stated elsewhere in bidder's offer, data sheets etc. The implied/ indirect deviations in data sheets etc. Shall not be binding on the purchaser.***

13.0 The following documents shall be furnished by the bidder with his offer:

- Compliance certificate duly signed and stamped (Enclosed at Section III).
- Guarantee schedule duly signed and stamped (Enclosed at Section III).

- GA drawings of following with empty/ filled-ups.
  - SCS body/ housing (as applicable).
  - Flushing Skid (if any).
  - Other equipment considered necessary for Layout/ Civil.

- Electrical Load Data (Enclosed at Section III).
- Schedule of Deviation (Enclosed in NIT).

The bidder to note that load requirement furnished and finalized during tender stage shall only be provided by BHEL and any changes or additional requirement of Electrical load by bidder during contract stage shall be provided by BHEL with cost repercussions to the bidder.

NOTE: Apart from above, no other drawing/ document/ data sheet etc. shall be submitted along with the offer. If any drawing/ document etc. is submitted with the offer, same shall be considered as for 'Reference' purpose only and shall not be reviewed/ commented upon and any deviation, exclusion to scope, etc. taken

in documents but not highlighted in the deviation schedule shall not be taken cognizance of.

14.0 Self-Cleaning Strainer packing procedure before dispatch

The purpose of this procedure is to outline the requirements and procedures for protecting the equipment's during shipment and preserving during the storage.

14.1 Preparation for Packing:

- After hydro testing, operation, all fluids e.g. water etc., shall be completely drained from all SCS's parts, and the equipment blown dry.
- All material shall be cleaned internally and externally to remove, scale, rust fillings and any other foreign material.
- The SCS shall be placed on a strong wooden base & bolted to the wooden base using the foundation holes for further transportation up to site.

14.2 Protection of parts:

- SCS Shell shall be packed in properly in high grade bubble plastic wrap for transportation, and long storage at site.
- Actuators shall be packed in separate wooden box of proper sizes.
- SCS items (EXCEPT SCS Shell) shall be packed in proper sizes of wooden cases. High grade woods like Rubber woods, jungle wood, hard wood, mango wood, pine wood, etc. is used for packing.
- Loose material, & Electrical & Electronics items shall be packed in corrugated box and plastic bags with proper tagging and marking of handle with care in proper sizes of wooden cases
- All finished (or) machined (External C.S. Surfaces shall be protected against corrosion with corrosion resisting coating, which is easily removable (Compound shall be such that it will remain on the surface at temperature normally encountered during shipping & storage).
- All machined surfaces shall be protected from mechanical damage. All external unfinished carbon steel surfaces shall be sand blasted & shall be coated with rust preventive primer.
- Flanged opening if any shall be covered with blank flanges sealed with blank gasket of natural rubber or equivalent. Butt welded opening shall be closed with temporary closing covers. Internal threads shall be protected with metal plug sealed with Teflon tape (if applicable). External thread shall be protected with PVC sleeve.
- Wooden cases shall be covered with HDPE cloth from inside wooden box and the top. All the opening in Self Cleaning Strainer shall be closed properly by suitably covering to prevent foreign material entering in plate heat exchanger.

- All fabricated wooden cases & crates conform to the requirement as per table given below:

Gross Weight [Kgs.]	Board Thickness	Batton / Rafter Thickness
2000 to 9000	Min. 30 mm	Min. 35 mm
9000 to 18000	Min. 50 mm	Min. 35 mm

- All the equipment shall be protected for entire period of dispatch, storage and erection against corrosion, incidental damage due to vermin, sunlight, rain, high temperature, humid atmosphere, rough handling in transit and storage. All MS parts which are not painted shall be provided with coating of grease.
- Clay Desiccant or such other moisture absorbing material in small cotton bags shall be placed and tied at various points on the equipment, wherever necessary.

14.3 Preservation

The equipment's shall be stored under closed/open space in packed condition until installation. The packages containing loose plates and gaskets are to be protected from extreme climatic conditions.

14.4 Photographs

14.5 Bidder to take photographs of all parts like SCS Shell, Screen, pumps (if any), piping, valves, instruments, actuators, panel (inside & outside) and sent to engineering deptt along with all inspection reports before final dispatch.

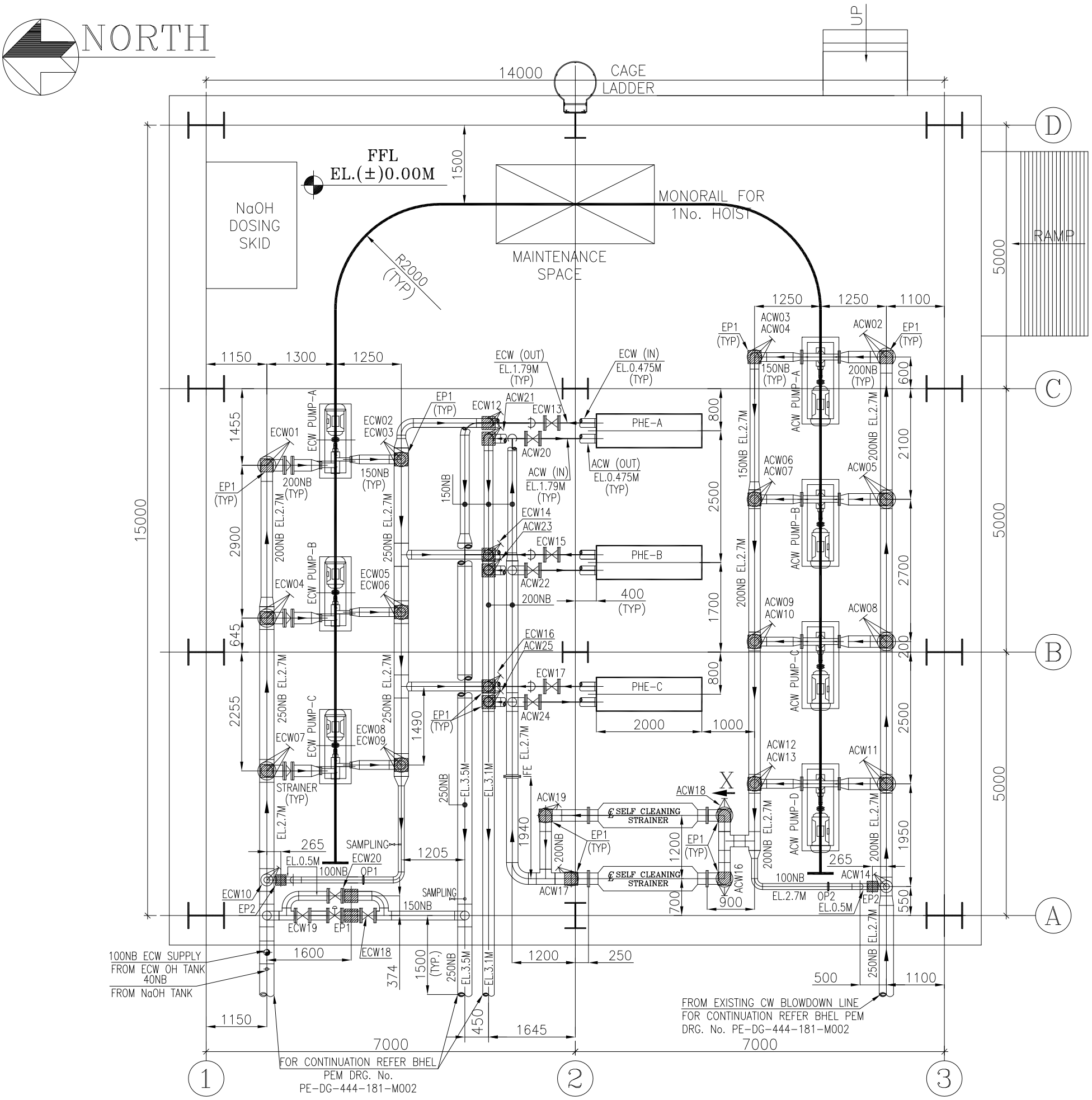

APPLICABLE FOR TYPE- I

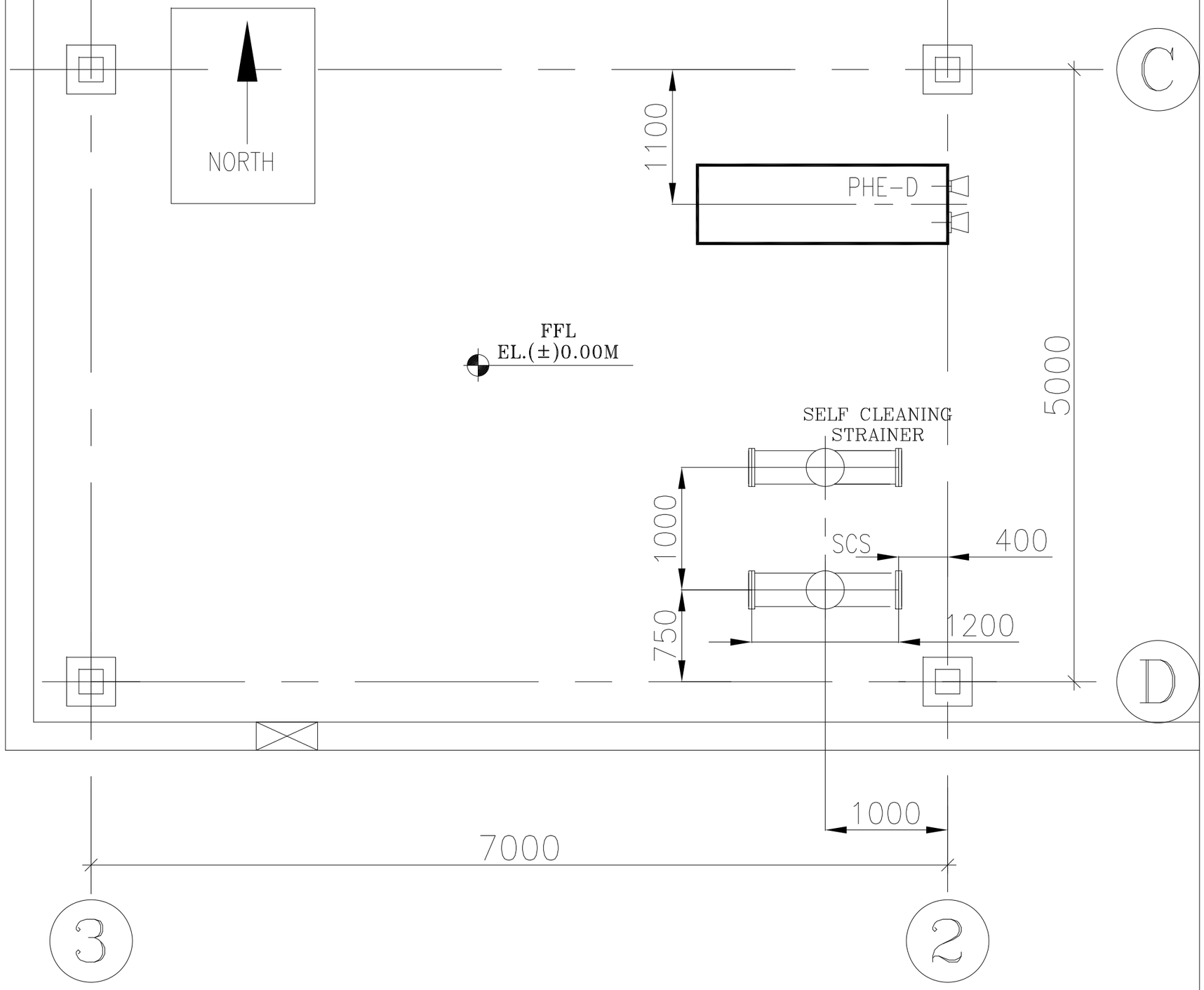

LAYOUT PLAN OF SELF CLEANING STRAINER INSIDE DMCW PUMPHOUSE

APPLICABLE FOR TYPE- I

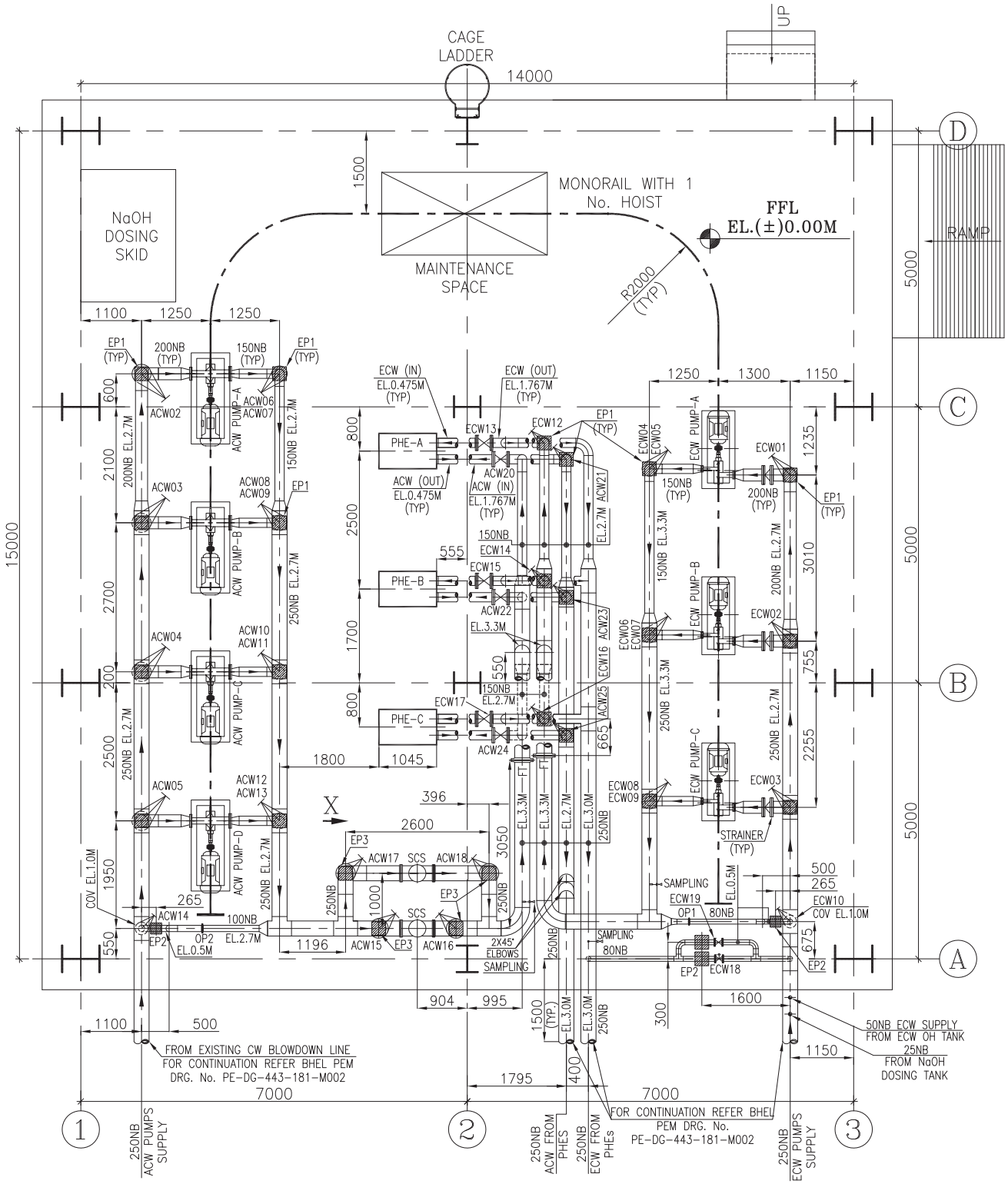

APPLICABLE FOR TYPE- II

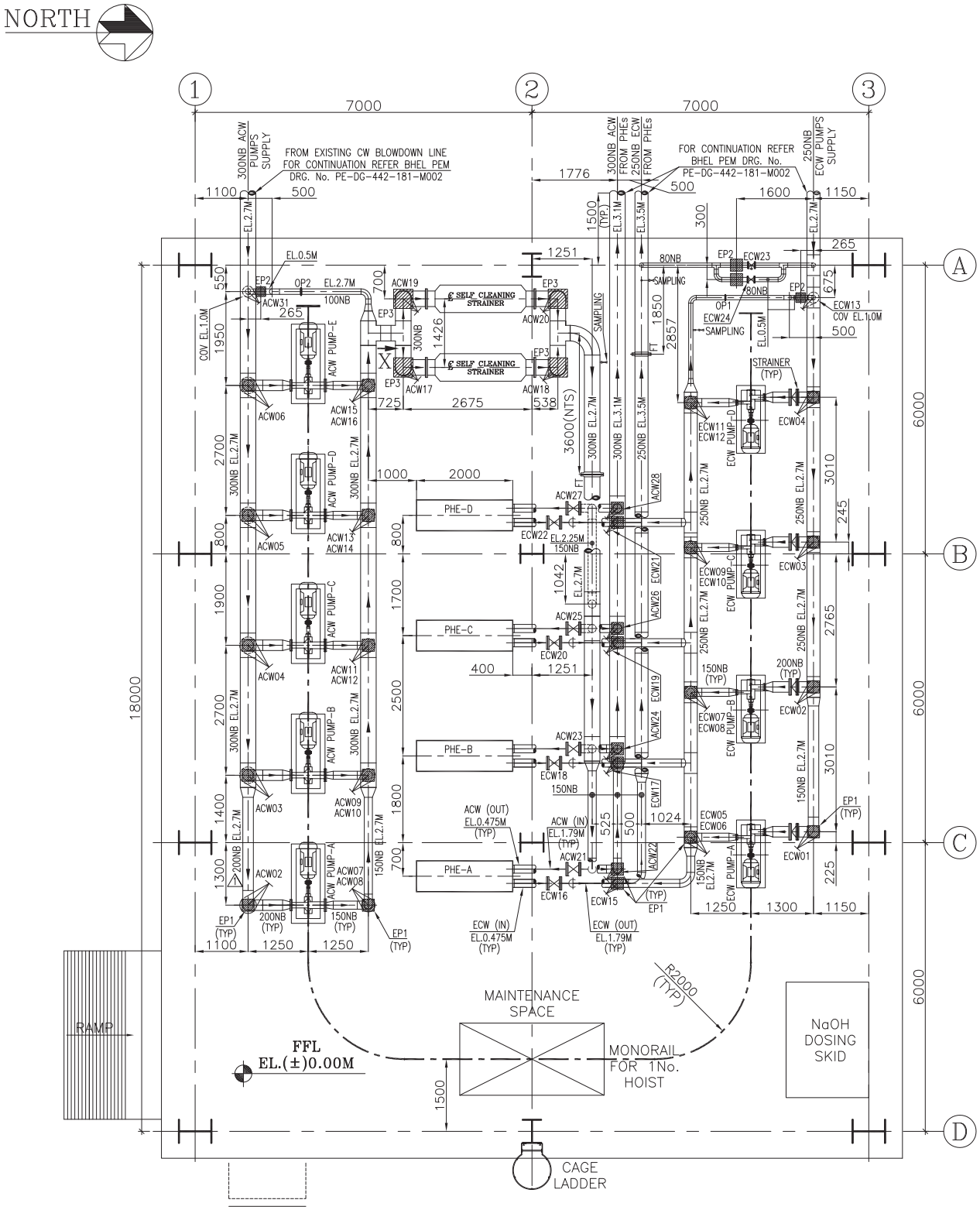

APPLICABLE FOR TYPE-III

SUB-SECTION – IB

SPECIFIC TECHNICAL REQUIREMENTS (ELECTRICAL)

SPECIFIC TECHNICAL REQUIREMENT

FOR

SELF CLEANING STRAINER

(ELECTRICAL PORTION)

1.0 EQUIPMENT & SERVICES TO BE PROVIDED BY BIDDER:

a) Services and equipment as per "Electrical Scope between BHEL and Vendor".

b) Any item /work either supply of equipm ent or erection m aterial which have not been specifically mentioned but are necessary to complete the work for trouble free and efficient operation of the plant shall be deemed to be included within the scope of this specification. The sam e shall be provided by the bidder without any extra charge.

c) Supply of m andatory spares as specified in the specifications of m echanical equipments.

d) Electrical load requirement for SELF CLEANING STRAINER (all AC & DC loads at different voltage levels like 415V AC, 240 V AC, 220 V DC etc).

e) All equipment shall be suitable for the power supply fault levels and other climatic conditions mentioned in the enclosed project information.

f) Bidder to furnish list of m akes for each equipment at contract stage, which shall be subject to custom er/BHEL approval without any com mercial and delivery implications to BHEL

g) Various drawings, data sheets as per required form at, Quality plans, calculations, test reports, test certificates, operation and maintenance manuals etc shall be furnished as specified at contract stage. All docum ents shall be subject to customer/BHEL approval without any commercial implication to BHEL.

h) Motor shall meet minimum requirement of motor specification.

i) Vendor to clearly indicate equipm ent locations and local routing lengths in their cable listing furnished to BHEL.

j) Cable BOQ worked out based on routing of cable listing provided by the vendor for " both end equipm ent in vendor' s sc ope"shall be binding to the vendor with +10 % margin to take care of slight variation in routing length & wastages.

2.0 EQUIPMENT & SERVICES TO BE PROVIDED BY PURCHASER FOR ELECTRICAL & TERMINAL POINTS:

Refer "Electrical Scope between BHEL and Vendor".

3.0 DOCUMENTS TO BE SUBMITTED ALONG WITH BID

3.1 The electrical specification without any deviation from the technical/quality assurance requirements stipulated shall be deem ed to be com plied by the bidder in case bidder furnishes the overall com pliance of package technical specification in the form of compliance certificate/No deviation certificate.

3.2 No technical subm ittal such as copies of data sheets, drawings, write-up, quality plans, type test certificates, technical literature, etc, is required during tender stage. Any such submission even if made, shall not be considered as part of offer.

4.0 List of enclosures :

a) Electrical scope between BHEL & vendor (Annexure –I)
b) Technical specification for motors.
c) Datasheets & quality plan for motors.
d) Electrical Load data format (Annexure –II)
e) BHEL cable listing format (Annexure –III)

ANNEXURE - I

REV-0, DATE: 30.05.2019

STANDARD ELECTRICAL SCOPE BETWEEN BHEL AND VENDOR

PACKAGES: SELF CLEANING STRAINER (SCS)

SCOPE OF VENDOR: SUPPLY

APPLICABLE FOR TYPE- I , II & III

PROJECT:

S.NO	DETAILS	SCOPE SUPPLY	SCOPE E&C	REMARKS
1	415V MCC Starter cum control panel (if applicable)	BHEL Vendor	BHEL BHEL	240 V AC (supply feeder)/415 V AC (3 PHASE 4 WIRE) supply shall be provided by BHEL based on load data provided by vendor at contract stage for all equipment supplied by vendor as part of contract. Any other voltage level (AC/DC) required will be derived by the vendor.
2	Local Push Button Station (for motors)	BHEL	BHEL	Located near the motor.
3	Power cables, control cables and screened control cables for a) both end equipment in BHEL's scope b) both end equipment in vendor's scope c) one end equipment in vendor's scope	 BHEL Vendor BHEL	 BHEL BHEL BHEL	1. For 3.b) & c): Sizes of cables required shall be informed by vendor at contract stage (based on inputs provided by BHEL) in the form of cable listing. Finalisation of cable sizes shall be done by BHEL. Vendor shall provide lugs & glands accordingly. 2. Cabling/ termination by BHEL.
4	Junction box for control & instrumentation cable	Vendor	BHEL	Number of Junction Boxes shall be sufficient and positioned in the field to minimize local cabling (max 10-12 mtrs) and trunk cable.
5	Any special type of cable like compensating, co-axial, prefab, MICC, fibre optical etc.	Vendor	BHEL	Refer scope/ C&I portion of specification for scope of fibre Optical cables if used between PLC/ micro processor & DCS.
6	Cable trays, accessories & cable trays supporting system	BHEL	BHEL	
7	Cable glands and lugs for equipment supplied by Vendor	Vendor	BHEL	1. Double compression Ni-Cr plated brass cable glands 2. Solder less crimping type heavy duty copper lugs for power & control cables.
8	Conduit and conduit accessories for cabling between equipment supplied by vendor	Vendor	BHEL	Conduits shall be medium duty, hot dip galvanised cold rolled mild steel rigid conduit as per IS: 9537.
9	Lighting	BHEL	BHEL	
10	Equipment grounding & lightning protection	BHEL	BHEL	
11	Below grade grounding	BHEL	BHEL	
12	LT Motors with base plate and foundation hardware	Vendor	BHEL	Makes shall be subject to customer/ BHEL approval at contract stage.

REV-0, DATE: 30.05.2019

STANDARD ELECTRICAL SCOPE BETWEEN BHEL AND VENDOR

PACKAGES: SELF CLEANING STRAINER (SCS)
SCOPE OF VENDOR: SUPPLY

APPLICABLE FOR TYPE- I , II & III

PROJECT:

S.NO	DETAILS	SCOPE SUPPLY	SCOPE E&C	REMARKS
13	Mandatory spares	Vendor	-	Vendor to quote as per specification.
14	Recommended O & M spares	Vendor	-	As specified elsewhere in specification
15	Any other equipment/ material/ service required for completeness of system based on system offered by the vendor (to ensure trouble free and efficient operation of the system).	Vendor	BHEL	
16	a) Input cable schedules (Control & Screened Control Cables) b) Cable interconnection details for above c) Cable block diagram	Vendor Vendor Vendor	- - -	Cable listing for Control and Instrumentation Cable in enclosed excel format shall be submitted by vendor during detailed engineering stage.
17	Equipment layout drawings	Vendor	-	For preparation of cabling layout drawings by BHEL, vendor shall furnish Electrical equipment layout drawings (both in print form as well as in AUTOCAD) of the complete plant (including electrical area) indicating location and identification of all equipment requiring cabling,
18	Electrical Equipment GA drawing	Vendor	-	For necessary interface review.

NOTES:

1. Make of all electrical equipment/ items supplied shall be reputed make & shall be subject to approval of BHEL/customer after award of contract.
2. All QPs shall be subject to approval of BHEL/customer after award of contract without any commercial implication.
3. In case the requirement of Junction Box arises on account of Power Cable size mis-match due to vendor engineering at later stage, vendor shall supply the Junction Box for suitable termination.

DATA SHEET-A

1.0	Design ambient temperature	:	50 °C
2.0	Maximum acceptable kW rating of LV motor	:	200KW *
3.0	Installation (Indoors/ Outdoors)	:	As required
4.0	Details of supply system		
	a) Rated voltage (with variation)	:	415V ± 10%
	b) Rated frequency (with variation)	:	50 Hz + 3 % to - 5%
	c) Combined voltage & freq. variation	:	10% (sum of absolute values)
	d) System fault level at rated voltage	:	454kA for 1 sec
	e) Short time rating for terminal boxes		
	o 110 kW and above (Breaker Controlled)	:	45 KA for 0.25 sec.
	o Below 110 kW (Contactor Controlled)	:	45 KA protected by HRC fuse
	f) LV System grounding	:	Solidly
5.0	Winding & Insulation	:	Class F with temp rise limited to class B
6.0	Minimum voltage for starting (As percentage of rated voltage)	:	85% for motor ratings below 110kW 80% for motor ratings from 110kW to 200kW.
7.0	Power cables data	:	Shall be given during detailed engg.
8.0	Earth Conductor Size & Material	:	Shall be given during detailed engg.
9.0	Space heater supply (for motors >=30kw)	:	240 V, 1¢, 50 Hz
10.0	Rating up to which Single phase motor	:	Acceptable below 0.2 kW
11.0	Locked rotor current		
	a) Limit as percentage of FLC	:	As per IS 12615
12.0	Makes	:	BHEL/ Customer approval (Package owner to take care)
13.0	Paint shade	:	Blue (RAL 5012) – Corrosion proof
14.0	Degree Of protection for motor/ terminal box	:	Degree of protection for various enclosures as per IEC6 0034-05 shall be as follows:-

i) Indoor motors - IP 54
ii) Outdoor motors - IP 55
iii) Cable box-indoor area - IP 54
iv) Cable Box-Outdoor area - IP 55

*** LT motors of continuous duty shall be energy efficient IE3 class conforming to IS-12615**

15.0 TESTING REQUIREMENTS: IN LINE WITH SPECIFICATION

TECHNICAL SPECIFICATION
FOR MOTORS

MOTORS

1.00.00 GENERAL REQUIREMENTS

1.01.00 For the purpose of design of equipment/systems, an ambient temperature of 50 deg. Centigrade and relative humidity of 95% (at 40 deg C) shall be considered. The equipment shall operate in a highly polluted environment.

1.02.00 All equipment's shall be suitable for rated frequency of 50 Hz with a variation of +3% & -5%, and 10% combined variation of voltage and frequency unless specifically brought out in the specification.

1.03.00 Contactor shall provide fully compatible electrical system, equipment's, accessories and services.

1.04.00 All the equipment, material and systems shall, in general, conform to the latest edition of relevant National and international Codes & Standards, especially the Indian Statutory Regulations.

1.05.00 Paint shade shall be as per RAL 5012 (Blue) for indoor and outdoor equipment.

1.06.00 The responsibility of coordination with electrical agencies and obtaining all necessary clearances for Contactors equipment and systems shall be under the Contactor scope.

1.07.00 Degree of Protection

Degree of protection for various enclosures as per IEC60034-05 shall be as follows :-

i)	Indoor motors	-	IP 54
ii)	Outdoor motors	-	IP 55
iii)	Cable box-indoor area	-	IP 54
iv)	Cable box-Outdoor area	-	IP 55

2.00.00 CODES AND STANDARDS

1)	Three phase induction motors	:	IS/IEC:60034
2)	Single phase AC motors	:	IS/ IEC:60034
3)	Crane duty motors	:	IS:3177, IS/IEC:60034
4)	DC motors/generators	:	IS:4722, IS/IEC:60034
5)	Energy Efficient motors	:	IS 12615, IEC:60034-30

3.00.00 **TYPE**

3.01.00 **AC Motors:**

a) Squirrel cage induction motor suitable for direct-on-line starting.

b) Continuous duty LT motors upto 200 KW Output rating (at 50 deg.C ambient temperature), shall be **Premium Efficiency class-IE3**, conforming to IS 12615, or IEC:60034-30.

c) Crane duty motors shall be slip ring/ squirrel cage Induction motor as per the requirement.

d) Motor operating through variable frequency drives shall be suitable for inverter duty. Also these motors shall comply the requirements stipulated in IEC: 60034-18-41 and IEC: 60034-18-42 as applicable.

3.02.00 DC Motors Shunt wound.

4.00.00 **RATING**

(a) Continuously rated (S1). However, crane motors shall be rated for S4 duty, 40% cyclic duration factor.

(b) Whenever the basis for motor or driven equipment ratings are not specified in the corresponding mechanical specification sub-sections, maximum continuous motor ratings shall be at least 10% above the maximum load demand of the driven equipment under entire operating range including voltage and frequency variations.

5.00.00 **TEMPERATURE RISE**

Air cooled motors

70 deg. C by resistance method for both thermal class 130(B) & 155(F) insulation.

Water cooled

80 deg. C over inlet cooling water temperature mentioned elsewhere, by resistance method for both thermal class 130(B) & 155(F) insulation.

6.00.00 **OPERATIONAL REQUIREMENTS**

6.01.00 **Starting Time**

6.01.01 For motors with starting time upto 20 secs. at minimum permissible voltage during starting, the locked rotor withstand time under hot condition at highest voltage limit shall be at least 2.5 secs. more than starting time.

6.01.02 For motors with starting time more than 20 secs. and upto 45 secs. at minimum permissible voltage during starting, the locked rotor withstand time under hot condition at highest voltage limit shall be at least 5 secs. more than starting time.

6.01.03 For motors with starting time more than 45 secs. at minimum permissible voltage during starting, the locked rotor withstand time under hot condition at highest voltage limit shall be more than starting time by at least 10% of the starting time.

6.01.04 Speed switches mounted on the motor shaft shall be provided in cases where above requirements are not met.

6.02.00 **Torque Requirements**

6.02.01 Accelerating torque at any speed with the lowest permissible starting voltage shall be at least 10% motor full load torque.

6.02.02 Pull out torque at rated voltage shall not be less than 205% of full load torque. It shall be 275% for crane duty motors.

6.03.00 **Starting voltage requirement**

(a) Up to 85% of rated voltage for ratings below 110 KW

(b) Up to 80% of rated voltage for ratings from 110 KW to 200 KW

(c) Up to 85% of rated voltage for ratings from 201 KW to 1000 KW

(d) Up to 80% of rated voltage for ratings from 1001 KW to 4000 KW

(e) Up to 75 % of rated voltage for ratings above 4000KW

7.00.00 DESIGN AND CONSTRUCTIONAL FEATURES

7.01.00 Suitable single phase space heaters shall be provided on motors rated 30KW and above to maintain windings in dry condition when motor is standstill. Separate terminal box for space heaters & RTDs shall be provided. However for flame proof motors, space heater terminals inside the main terminal box may be acceptable.

7.02.00 All motors shall be either Totally enclosed fan cooled (TEFC) or totally enclosed tube ventilated (TETV) or Closed air circuit air cooled (CACA) type. However, motors rated 3000KW or above can be Closed air circuit water cooled (CACW). The method of movement of primary and secondary coolant shall be self-circulated by fan or pump directly mounted on the rotor of the main motor as per IEC 60034-6. However VFD driven motors can be offered with forced cooling type with machine mounted fan or pump driven by separate electric motor. Motors and EPB located in hazardous areas shall have flame proof enclosures conforming to IS:2148 as detailed below

(a) Fuel oil area : Group – IIB

(b) Hydrogen generation : Group - IIC or (Group-I, Div-II as per plant area NEC) or (Class-1, Group-B, Div-II as per NEMA /IEC60034)

7.03.00 Winding and Insulation

(a)	Type	:	Non-hygroscopic, oil resistant, flame resistant
(b)	Starting duty	:	Two hot starts in succession, with motor initially at normal running temperature.
(c)	11kV & 3.3 kV AC motors	:	Thermal class 155 (F) insulation. The winding insulation process shall be total Vacuum Presure Impregnated i.e resin poor method. The lightning Impulse & interturn insulation surge withstand level shall be as per IEC-60034 part-15.
(d)	240VAC, 415V AC & 220V DC motors	:	Thermal Class (B) or better

7.04.00 Motors rated above 1000KW shall have insulated bearings to prevent flow of shaft currents.

7.05.00 Motors with heat exchangers shall have dial type thermometer with adjustable alarm contacts to indicate inlet and outlet primary air temperature.

7.06.00 Noise level for all the motors shall be limited to 85 dB(A) except for BFP motor for which the maximum limit shall be 90dB(A). Vibration shall be limited within the limits prescribed in IS:12075 / IEC 60034-14 . Motors shall withstand vibrations produced by driven equipment. HT motor bearing housings shall have flat surfaces, in both X and Y directions, suitable for mounting 80mmX80mm vibration pads.

7.07.00 In HT motors, at least four numbers simplex / two numbers duplex platinum resistance type temperature detectors shall be provided in each phase stator winding. Each bearing of HT motor shall be provided with dial type thermometer with adjustable alarm contact and preferably 2 numbers duplex platinum resistance type temperature detectors.

7.08.00 Motor body shall have two earthing points on opposite sides.

7.09.00 11 KV motors shall be offered with Separable Insulated Connector (SIC) as per IEEE 386. The offered SIC terminations shall be provided with protective cover and trifurcating sleeves. SIC termination kit shall be suitable for fault level of 25 KA for 0.17 seconds.

7.10.00 3.3 KV motors shall be offered with dust tight phase separated double walled (metallic as well as insulated barrier) Terminal box. Employer shall provide termination kit for the offered Terminal box. The offered Terminal Box shall be suitable for fault level of 250 MVA for 0.12 sec. Removable gland plates of thickness 3 mm (hot/cold rolled sheet steel) or 4 mm (non magnetic material for single core cables) shall be provided.

7.11.00 The spacing between gland plate & centre of terminal stud shall be as per Table-I.

7.12.00 All motors shall be so designed that maximum inrush currents and locked rotor and pullout torque developed by them at extreme voltage and frequency variations do not endanger the motor and driven equipment.

7.13.00 The motors shall be suitable for bus transfer schemes provided on the 11kV, 3.3 kV /415V systems without any injurious effect on its life.

7.14.00 For motors rated 2000 KW & above, neutral current transformers of PS class shall be provided on each phase in a separate neutral terminal box.

7.15.00 The size and number of cables (for HT motors) to be intimated to the successful Contactor during detailed engineering and the Contactor shall provide terminal box suitable for the same.

8.00.00 The ratio of locked rotor KVA at rated voltage to rated KW shall not exceed the following (without any further tolerance):

(a)	From 50KW & upto 110KW	:	11.0
(b)	From 110 KW & upto 200 KW	:	9.0
(c)	Above 200 KW & upto 1000KW	:	10.0
(d)	From 1001KW & upto 4000KW	:	9.0
(e)	Above 4000KW	:	6 to 6.5

10.00.00 TYPE TEST

10.01.00 **HT MOTORS**

10.01.01 The Contactor shall carry out the type tests as listed in this specification on the equipment to be supplied under this contract. The Contactor shall indicate the charges for each of these type tests separately in the relevant schedule of Section - VII- (BPS) and the same shall be considered for the evaluation of the bids. The type tests charges shall be paid only for the test(s) actually conducted successfully under this contract and upon certification by the Employer's engineer.

10.01.02 The type tests shall be carried out in presence of the Employer's representative, for which minimum 15 days notice shall be given by the Contactor. The Contactor shall obtain the Employer's approval for the type test procedure before conducting the type test. The type test procedure shall clearly specify the test set–up, instruments to be used, procedure, acceptance norms, recording of different parameters, interval of recording, precautions to be taken etc. for the type test(s) to be carried out.

10.01.03 In case the Contactor has conducted such specified type test(s) within last ten years as on the date of bid opening, he may submit during detailed engineering

the type test reports to the Employer for waival of conductance of such test(s). These reports should be for the tests conducted on the equipment similar to those proposed to be supplied under this contract and test(s) should have been either conducted at an independent laboratory or should have been witnessed by a client. The Employer reserves the right to waive conducting of any or all the specified type test(s) under this contract. In case type tests are waived, the type test charges shall not be payable to the Contactor.

10.01.04 Further the Contactor shall only submit the reports of the type tests as listed in "LIST OF TESTS FOR WHICH REPORTS HAVE TO BE SUBMITTED" and carried out within last ten years from the date of bid opening. These reports should be for the test conducted on the equipment similar to those proposed to be supplied under this contract and the test(s) should have been either conducted at an independent laboratory or should have been witnessed by a client. However if the Contactor is not able to submit report of the type test(s) conducted within last ten years from the date of bid opening, or in the case of type test report(s) are not found to be meeting the specification requirements, the Contactor shall conduct all such tests under this contract at no additional cost to the Employer either at third party lab or in presence of client/Employers representative and submit the reports for approval.

10.01.05 **LIST OF TYPE TESTS TO BE CONDUCTED**

The following type tests shall be conducted on each type and rating of HT motor

(a) No load saturation and loss curves upto approximately 115% of rated voltage

(b) Measurement of noise at no load.

(c) Momentary excess torque test (subject to test bed constraint).

(d) Full load test(subject to test bed constraint)

(e) Temperature rise test at rated conditions. During heat run test, bearing temp., winding temp.,coolant flow and its temp. shall also be measured. In case the temperature rise test is carried at load other than rated load, specific approval for the test method and procedure is required to be obtained. Wherever ETD's are provided, the temperature shall be measured by ETD's also for the record purpose.

10.01.06 **LIST OF TESTS FOR WHICH REPORTS HAVE TO BE SUBMITTED**

The following type test reports shall be submitted for each type and rating of HT motor

(a) Degree of protection test for the enclosure followed by IR, HV and no load run test.

(b) Terminal box-fault level withstand test for each type of terminal box of HT motors only.

(c) Lightning Impulse withstand test on the sample coil shall be as per clause no. 4.3 IEC-60034, part-15

(d) Surge-withstand test on inter-turn insulation shall be as per clause no. 4.2 of IEC 60034, part-15

10.02.00 **LT Motors**

10.02.01 LT Motors supplied shall be of type tested design. During detailed engineering, the Contactor shall submit for Employer's approval the reports of all the type tests as listed in this specification and carried out within last *ten* years from the date of bid opening. These reports should be for the test conducted on the equipment similar to those proposed to be supplied under this contract and the test(s) should have been either conducted at an independent laboratory or should have been witnessed by a client.

10.02.02 However if the Contactor is not able to submit report of the type test(s) conducted within last ten years from the date of bid opening, or in the case of type test report(s) are not found to be meeting the specification requirements, the Contactor shall conduct all such tests under this contract at no additional cost to the Employer either at third party lab or in presence of client/Employers representative and submit the reports for approval.

10.02.03 **LIST OF TESTS FOR WHICH REPORTS HAVE TO BE SUBMITTED**

The following type test reports shall be submitted for each type and rating of LT motor of above 50 KW only

1. Measurement of resistance of windings of stator and wound rotor.

2. No load test at rated voltage to determine input current power and speed

3. Open circuit voltage ratio of wound rotor motors (in case of Slip ring motors)

4. Full load test to determine efficiency power factor and slip

5. Temperature rise test

6. Momentary excess torque test.

7. High voltage test

8. Test for vibration severity of motor.

9. Test for noise levels of motor(Shall be limited as per clause no 7.06.00 of this section)

10. Test for degree of protection and

11. Overspeed test.

12. Type test reports for motors located in fuel oil area having flame proof enclosures as per IS 2148 / IEC 60079-1

10.03.00 All acceptance and routine tests as per the specification and relevant standards shall be carried out. Charges for these shall be deemed to be included in the equipment price.

10.04.00 The type test reports once approved for any projects shall be treated as reference. For subsequent projects of NTPC, an endorsement sheet will be furnished by the manufacturer confirming similarity and “No design Change”. Minor changes if any shall be highlighted on the endorsement sheet.

TABLE - I

DIMENSIONS OF TERMINAL BOXES FOR LV MOTORS

Motor MCR in KW of	Minimum distance between centre stud and gland plate in mm
UP to 3 KW	**As per manufacturer's practice.**
Above 3 KW - upto 7 KW	85
Above 7 KW - upto 13 KW	115
Above 13 KW - upto 24 KW	167
Above 24 KW - upto 37 KW	196
Above 37 KW - upto 55 KW	249
Above 55 KW - upto 90 KW	277
Above 90 KW - upto 125 KW	331
Above 125 KW-upto 200 KW	203

For HT motors the distance between gland plate and the terminal studs shall not be less than 500 mm.

PHASE TO PHASE/ PHASE TO EARTH AIR CLEARANCE:

NOTE: Minimum inter-phase and phase-earth air clearances for LT motors with lugs installed shall be as follows:

Motor MCR in KW	Clearance
UP to 110 KW	10mm
Above 110 KW and upto 150 KW	12.5mm
Above 150 KW	19mm

SUB-SECTION – IC

SPECIFIC TECHNICAL REQUIREMENTS (C &I)

SCOPE MATRIX - SCS SYSTEM		
S.No.	**PROJECT**	**APPLICABLE FOR TYPE-I, II, & III**
1	**SYSTEM APPLICABLE: SELF CLEANING STRAINER(SCS)**	Y
2	**SYSTEM CONFIGURATION: UNITISED OR COMMON OR AS APPLICABLE**	COMMON
3	**CONTROL SYSTEM**	REFER NOTE-1
4	**LOCATION OF CONTROL SYSTEM**	
5	**CONTROL SYSTEM SCOPE (BIDDER /BHEL/ CUSTOMER)**	
6	**CONTROL FROM PUSH BUTTONS ON STARTER PANEL**	Y; REFER NOTE 3
7	**ANNUNCIATION ON STARTER PANEL (Y/N) -- IF Y, MIN NO. OF HARDWIRED ALARMS / INDICATIONS**	Y; REFER NOTE-4
8	**MIMIC ON STARTER PANEL (Y/N)**	NA
9	**PROTECTION CLASS FOR STARTER PANEL**	AS PER DATASHEET OF 'LOCAL CONTROL CUM STARTER PANEL' (herein also referred as 'Starter Panel' or 'Local Control Panel' or 'Switchgear Panel' interchangeably)
10	**ACTUATOR WITH INTEGRAL STARTER(Non-intrusive type)) (Y/N) - SHALL BE FOUNDATION FIELDBUS/PROFIBUS-DP PROTOCOL COMPATIBLE.**	Y
11	**DPG/ DPT PER SCS SYSTEM TRANSMITTERs SHALL BE FOUNDATION FIELDBUS/PROFIBUS-PA PROTOCOL COMPATIBLE.**	DIFFERENTIAL PRESSURE TRANSMITTER = 2 nos. (Across each Filter) DIFFERENTIAL PRESSURE GAUGE = 1 no. (Across each Filter)
12	**SEA WATER APPLICATION**	NA
	NOTES:	
1	Type of control system shall be DDCMIS (FGD-DCS) based, located in FGD - Control Room in BHEL scope. Field instrumentation and starter panels for the package are in bidder's scope of supply.	
2	Self cleaning strainer shall be supplied with its Local control panel/Starter panel and its annunciation for its operation. Extent of annunciation shall be decided during detailed engg.	

3	Push buttons and indication lamps for Open/Close and Start/Stop of drives/equipments shall be provided on the starter panel. Remote and local indication, indicating lamps / LED cluster for instruments/drives/equipments status and critical alarms shall be provided on the starter panel. Nos. shall be decided during detailed engineering.
4	415 V, 3 phase AC power supply shall be provided by BHEL at a single point for the starter panel. Further any electrical distribution shall be in bidder's scope. Any other voltage requirement to be arranged/derived by bidder by providing suitable control transformer. Starter panel in bidder's scope shall have provision for redundant feeder with fast automatic changeover if redundant feeder is applicable.
5	Bidder to terminate all control elements in the local control cum starter panel/Junction box for further cabling to DDCMIS.
6	Following documents shall be provided by bidder during detailed engineering for approval: a. Input/Output list, Drives list, b. Instrument datasheets and check lists/Quality plan, c. Panel external/internal GA drawing and termination details, d. Panel datasheet and QAP e. Recommended control logics / Control philosophy . f. Complete cable schedule & cable interconnection details
7	All the instruments along with necessary fittings, accessories and valve manifold etc., instrument rack and junction boxes, erection hardware shall be in bidder's scope of supply.
8	LIR/LIE shall be provided for mounting the instruments in the field.
9	Mandatory spare list shall be referred in 'List of mandatory spares' attached elsewhere in the specification and shall be supplied by bidder.
10	Open/close limit switch feedback of valves are to be connected to DCS for remote viewing and for interlock & protection.
11	The Vendor list/ sub-vendor list shall be subject to BHEL / Customer approval during contract stage.
12	The technical requirements for instruments mentioned in the specification are minimum requirements. Items not specifically mentioned and required for the completeness of the system shall be supplied by bidder.

`

SPECIFIC TECHNICAL REQUIREMENTS
(SCS SYSTEM)

	SPECIFIC TECHNICAL REQUIREMENTS (C&I) FOR SCS SYSTEM	

Specific Technical Requirements (C&I):

1.0 SCS system shall be operated from FGD-DCS (DCS-BHEL Scope of supply) through operator work stations.

2.0 Bidder to provide local control panel(LCP)/starter panel for SCS system. This LCP/starter panel will act as interface between the FGD-DCS and the field devices for commands & feedbacks.
In addition, LCP/starter panel shall have the provision of command (start/stop) & feedback interface with plant FGD-DCS

3.0 Bidder to supply all the instruments (DPT,DPG etc.) required for the package along with necessary fittings, accessories and valve manifold etc. All instruments shall be provided with durable epoxy coating for housing and all exposed surfaces of the instruments.

4.0 All the Electronic Transmitter for Pressure, Differential Pressure and DP based Flow /Level measurements shall be genuine, verifiable FOUNDATION FIELDBUS/PROFIBUS PA protocol compatible instruments. The transmitters shall be connected to DDCMIS through FOUNDATION FIELDBUS/PROFIBUS PA protocol complying to IEC 61158 directly from transmitter. This is subject to customer approval and BHEL decision shall be final.

5.0 ON OFF and INCHING type actuators (Non-intrusive type) shall be FOUNDATION FIELDBUS/PROFIBUS-DP compatible with Open/Close command termination logic suitably built inside the actuator.

6.0 The FOUNDATION FIELDBUS/PROFIBUS protocol design shall be further validated by BHEL and approved by NTPC during detailed engineering and any variation/ changes required based on DDCMIS system requirements and actual field installation, operational philosophy etc. shall be considered by bidder without any implications.

7.0 All transmitters shall be suitably grouped together and mounted inside (i) Local Instruments Enclosures (LIEs) in case of open areas of the plant and (ii) In Local Instrument Racks (LIRs) in case of covered areas.

8.0 Complete C&I system for SCS System is in bidder’s scope of supply. Items not specifically mentioned however required for the completeness of the system shall be supplied by bidder without any commercial implication.

9.0 The Contractor shall provide complete Instrumentation for control, monitoring and operation of entire SCS system. The requirements given are to be read in conjunction with detailed Technical specification enclosed in the specification. Further in case of any discrepancy in the requirement within the same section noted by the bidder in the specification, the same will be brought to the notice of BHEL in the form of pre- bid clarification. In absence of any pre-bid clarification, the more stringent requirement as per interpretation of customer shall prevail without any commercial implication.

10.0 The quantity of instruments for the system shall be as per tender P &ID wherever provided of the respective system as a minimum, for bidding purpose. However, Bidder shall also include in his proposal all the instruments and devices that are needed for the completeness of the plant auxiliary system/ equipment supplied by the bidder, even if the same is not specifically appearing in the P & ID. During detail engineering if any additional instruments are required for safe & reliable operation of plant, bidder shall supply the same without any price implication.

11.0 415V AC Power supply shall be provided by BHEL at a single point (Please refer the Electrical Specification for more detail), further distribution to various instruments/equipment of the system shall be in bidder scope. Bidder to include necessary power distribution board, changeover circuit in his scope. Any power supply other than the above , UPS power etc., if required by any instrument/equipment has to be derived by the bidder from the above supply & all necessary hardware for the same shall be in bidder scope. Bidder to submit the power requirement along with the bid.

12.0 Power supply derived for contact interrogation, interposing relay and solenoid shall generally be ungrounded 24 V D.C. only.

13.0 The make of the items shall be from sub-vendor list .However the make/model of various instruments/items/systems shall be subject to approval of owner/purchaser during detailed engineering stage. No commercial implication in this regard shall be acceptable. In case of any conflict or repetition of clauses in the specification, the more stringent requirements among them are to be complied with.

14.0 The design, manufacture, inspection, testing, site calibration and installation of all C&I equipment and systems covered under this

specification shall conform to the latest editions of applicable codes and standards.

15.0 The scope of cable shall be referred in Electrical scope split sheet in Electrical portion of the specification.

16.0 Bidder shall provide Cable Schedule in BHEL excel format provided in Electrical portion of the specification. All cable interconnection details for complete system shall be in Bidders' scope.

17.0 Instrument installation and accessories required for the same shall be in Bidder's scope and shall be subject to customer/BHEL's approval during detailed engineering.

18.0 Bidder to provide erection hardware including junction boxes, canopies, structural steel as required.

19.0 Every panel-mounted instrument, requiring power supply, shall be provided with a pair of easily replaceable glass cartridge fuses of suitable rating. Every instrument shall be provided with a grounding terminal and shall be suitably connected to the panel grounding bus.

20.0 Provision for separate Terminal block/wiring diagram for power and control blocks of control panel to be ensured.

21.0 To ensure availability, adequate redundancy in system design shall be provided at hardware, software and sensor level. For the protection system, independent sensing device shall be provided to ensure adequate safety of plant equipment.

22.0 Redundancy of sensors shall be provided by bidder

(i) Triple redundancy for all analog and binary inputs required for protection of system/drives.

(ii) For all other control functions dual redundancy of the sensors shall be provided by the bidders.

23.0 The design of the control systems and related equipment shall adhere to the principle of 'Fail Safe' Operation wherever safety of personnel / plant equipment is involved and shall not cause a hazardous condition. However, it shall also be ensured that occurrence of false trips are avoided/ minimized.

24.0 All panels, cabinets shall be provided with a continuous bare copper ground bus. The ground bus shall be bolted to the panel structure on bottom on both sides. The bolts shall face inside of panels. The system ground shall be isolated from the panel ground with suitable isolators. All internal component grounds or common shall be connected to the system ground, which shall be fabricated of copper flat (size 25mm x 6mm min., length as applicable).

25.0 Bidder to perform tests of C&I items/instruments/systems as per quality plans/type test attached in the specification.

26.0 The requirements given are to be read in conjunction with detailed Technical specification enclosed.

27.0 The bidders shall specifically mention any deviation they would like to take on the C&I specification. In absence of only deviation, a “No deviation” certificate is to be furnished.

28.0 All field instruments shall be weatherproof, drip tight, dust tight and splash proof suitable for use under outdoor ambient conditions prevalent in the subject plant. All field-mounted instruments shall be mounted in suitable locations where maximum accessibility for maintenance is achieved. All the field instruments shall also be provided with SS tag nameplate and double compression type Nickel-plated brass cable gland. Gaskets, Fasteners, Counter and mating flange (SS316 material), nuts & bolts etc. shall also be included, wherever required with the field instruments.

29.0 For instruments which are not located inside covered building, suitable canopy/ protective arrangement shall be provided which shall be approved during detail engineering.

30.0 All the wetted parts of the instruments including the accessories like root valves, impulse piping, drain cocks, gauge-zeroing cocks, valve manifolds and all the other accessories required for mounting/erection of these local instruments as well as valves shall be of SS-316 material, suitable pressure class and same shall be in bidder’s scope .

31.0 All instruments should be supplied with valid calibration and test certificates provided by OEM.

32.0 At least 20% spare unused terminals shall be provided everywhere including local junction boxes, instrument racks/enclosures, termination/marshalling cabinets, etc.

33.0 Double root valve shall be provided for all pressure tapings where the design pressure exceeds 40kg/cm2.

34.0 All the instruments PG/DPG/DPT/PT etc. as applicable shall have chemical/diaphragm seal.

35.0 Number of pairs to be selected for Screen/ Control cable

(a) F-Type: 2P/4P/8P/12P(Size : 0.5 mm2)

(b) G-Type: 2P/4P/8P/12P(Size : 0.5 mm2)

(c) Core Cable: 3CX2.5sqmm2/ 5CX2.5sqmm2/ 12CX1.5sqmm2

36.0 Drive control philosophy/signal exchange list attached elsewhere in the specification are Tentative.Shall be finalised during detailed engineering.

37.0 Bidder to provide mandatory spares as per mandatory spares list. Attached elsewhere in the specification

38.0 Editable & pdf copy of Drawings/Documents and data to be furnished after award of the contract: List of Drawings/Documents and data to be furnished by bidder after award of the contract are mentioned under section" List Of Documents/Deliverables".

- GA & wiring diagram of local panel.
- Power requirement.
- Local control panel & instruments data sheet.
- Instrument schedule
- Alarm Schedule
- Any other document decided during detailed engineering

Note:-

1. All equipment items shall be of latest design with proven on track record.

2. The above given scope is indicative & minimum. Any item/ equipment not indicated above however required for the completeness of the system is to be supplied by bidder without any technical, commercial and delivery implication to BHEL.

3. Documents of C&I System shall be submitted to end user/owner for approval during detail engineering. Changes, if any, shall be accommodated by the bidder without any price/time implication.

`

GENERAL TECHNICAL REQUIREMENTS
(SCS SYSTEM)

GENERAL REQUIREMENT

1.0 Bidder shall provide complete and independent control & instrumentation system with all accessories, auxiliaries and associated equipments for the safe, efficient and reliable operation of auxiliary systems.

2.0 The quantity of instruments for auxiliary system shall be as per tender P &ID wherever provided of the respective system as a minimum, for bidding purpose. However, Bidder shall also include in his proposal all the instruments and devices that are needed for the completeness of the plant auxiliary system/ equipment supplied by the bidder, even if the same is not specifically appearing in the P & ID. During detail engineering if any additional instruments are required for safe & reliable operation of plant, bidder shall supply the same without any price implication.

3.0 Measuring instruments/equipment and subsystems offered by the bidder shall be from reputed experienced manufacturers of specified type and range of equipment, whose guaranteed and trouble free operation has been proven. Further all the instruments shall be of proven reliability, accuracy, and acceptable international standards and shall be subject to employer's approval. All instrumentation equipment and accessories under this specification shall be furnished as per technical specification, ranges, makes/ numbers as approved by the employer' during detail engineering.

4.0 The necessary root valves, impulse piping, drain cocks, gauge-zeroing cocks, valve manifold and all the other accessories required for mounting/ erection of these local instruments shall be furnished, even if not specifically asked for, on as required basis. The contacts of equipment mounted instruments; sensors, switches etc for external connection including spare contacts shall be wired out to suitably located junction boxes.

5.0 The customer specification attached as Specific Technical Requirement will supercede the Data sheets, if there is any mismatch.

`

LIST OF DOCUMENTS/DELIVERABLES

LIST OF DELIVERABLES OF PEM - C&I DEPARTMENT FOR SCS SYSTEM FOR NTPC NORTH KARANPURA STPP (3X660 MW) - FGD SYSTEM PACKAGE

DOCUMENT NUMBER PE-GL-441-145-I100 SHEET 1 of 1

Sl.No.	DRAWING NO.	DRAWING/DOCUMENT TITLE	CATEGORY
1	PE-V0-441-145-I901	CONTROL & OPERATIONAL WRITE-UP FOR THE SYSTEM	A
2	PE-V0-441-145-I902	CONTROL SCHEME/LOGIC DIAGRAM(TO BE IMPLEMENTED IN DDCMIS)	A
3	PE-V0-441-145-I903	HMI PICTURES/PLANT SCHEMATICS	A
4	PE-V0-441-145-I904	INSTRUMENT SCHEDULE with set points	A
5	PE-V0-441-145-I905	I/O LIST (ANALOG & BINARY)	A
6	PE-V0-441-145-I906	DRIVE LIST (ANALOG & BINARY)	A
7	PE-V0-441-145-I907	FIELD JB/LIE/LIR TERMINATIONS	A
8	PE-V0-441-145-I908	DATASHEETS FOR INSTRUMENTS, JBs, etc.	A
9	PE-V0-441-145-I909	QUALITY PLANS (INSTRUMENTS,LCP etc.)	A
10	PE-V0-441-145-I912	CABLE SCHEDULE & INTERCONNECTION	A
11	PE-V0-441-145-I914	PANEL EXTERNAL/INTERNAL GA DRAWING AND TERMINATION DETAILS	A
12	PE-V0-441-145-I915	Hook up drawings and the drawings for open racks & closed racks	A
13	PE-V0-441-145-I916	ANNUNCIATION & SOE LIST	A

NOTES: 1. ANY OTHER DOCUMENT DECIDED DURING DETAILED ENGINEERING SHALL BE PROVIDED BY BIDDER WITHOUT ANY COMMERCIAL/TECHNICAL IMPLICATION.

2. CONTRACTOR TO SUBMIT REUSABLE DATABASE FORMATS IN BHEL/CUSTOMER APPROVED FORMATS LIKE MS EXCEL,MS ACCESS OF DOCUMENTS LIKE INSTRUMENT SCHEDULE, I/O LIST, DRIVE LIST,FIELD JB TERMINATIONS, CABLE SCHEDULE & INTERCONNECTION, etc. SOFT COPY OF FORMATS SHALL BE PROVIDED TO SUCCESSFUL BIDDERS.

APPLICABLE FOR TYPE - I

TECHNICAL SPECIFICATION (C&I) FOR
SCS SYSTEM

SPECIFICATION FOR MEASURING INSTRUMENTS (PRIMARY & SECONDARY) AND CONTROL PANEL.

1.00.00	**MEASURING INSTRUMENTS (PRIMARY AND SECONDARY)**
1.01.00	Measuring instruments/equipment and subsystems offered by the Bidder shall be from reputed experienced manufacturers of specified type and range of equipment, whose guaranteed and trouble free operation has been proven. Refer Sub-section Basic Design Criteria. Further, all instruments shall be of proven reliability, accuracy, and repeatability requiring a minimum of maintenance and shall comply with the acceptable international standards and shall be subject to Employer's approval.
1.02.00	Every panel-mounted instrument requiring power supply shall be provided with easily replaceable glass cartridge fuses of suitable rating. Every instrument shall be provided with a grounding terminal and shall be suitably connected to the panel grounding bus.
1.03.00	All transmitters, sensors, switches and gauges for parameters like pressure, temperature, level, flow etc. as required for the safe and efficient operation and maintenance as well as for operator and management information (including all computation) of equipment in the system under the scope of specification shall be provided on as required basis with in quoted lump sum price. The Contractor shall furnish all Instrumentation / Control equipment & accessories under this specification as per technical specification, ranges, makes & model as approved by the Employer during detailed engineering.
1.04.00	The necessary root valves, impulse piping, drain cocks, gauge-zeroing cocks, valve manifolds and all the other accessories required for mounting/erection of these local instruments shall be furnished, even if not specifically asked for, on as required basis. The contacts of equipment mounted instruments, sensors, switches etc. for external connection including spare contacts shall be wired out in flexible/rigid conduits, independently to suitably located common junction boxes. The proposal shall include the necessary cables, flexible conduits, junction boxes and accessories for the above purpose. Double root valves shall be provided for all pressure tapping where the pressure exceeds 40 Kg./sq.cm.
1.05.00	
1.06.00	

4.00.0 **SPECIFICATIONS FOR PR. GAUGE, D.P. GAUGE, TEMP. GAUGE AND LEVEL GAUGE.**

Sl. No	FEATURES	ESSENTIAL/MINIMUM REQUIREMENTS		
		Pr. Gauge/ DP Gauge/ Draught gauges	Temperature Gauge	Level Gauge
1	Sensing Element	Bourdon for high pressure, Diaphragm/ Bellow for low pr.	Inert gas actuated/ Liquid filled other than mercury	Tempered * toughened Borosilicate gauge glass steel armoured reflex or transparent type.
2	Material of sensing element	SS 316	SS 316	
3	Material of movement	SS 304	SS 304	
4	Body material	Die-cast aluminium	Die-cast aluminium	Forged carbon steel/304 SS
5	Dial size	150mm	150 mm	Tubular covering entire range

13.00.00 **FIELD INSTRUMENTS BASED ON FIELDBUS**

The following instruments shall be connected to DDCMIS through fieldbus i.e. FOUNDATION Fieldbus/PROFIBUS PA protocol complying to IEC 61158 directly from transmitter.

13.01.00 **Electronic Transmitter for Pressure, Differential Pressure and DP based Flow / Level measurements.**

S No.	Features	Essential/Minimum Requirements
1.	Type of Transmitter	FOUNDATION Fieldbus/PROFIBUS PA based output

	2	Accuracy	± 0.060 % of calibrated range (minimum) for calibrated range greater than 400 mmwc. +0.065% of calibrated range (minimum) for calibrated range greater than 250 kg/cm2. ± 0.10 % of calibrated range (minimum) for calibrated range less than 400 mmwc.
	3.	Stability	0.25 % of calibrated range for 10 years for calibrated range greater than equal to 400 mmwc on standard conditions of manufacturer. 0.2 % of calibrated range for 1 years for calibrated range less than 400 mmwc on standard conditions of manufacturer. 0.15% of calibrated range for 5 years for DPT with static pressure greater than 250 kg/cm2.
	4	Turn down	50:1 for greater than or equal to span of 400mmwcl. 20:1 for span below 400mmwcl. 10:1 for span greater than 250 kg/cm2
		(Above mentioned (2,3,4) parameters/features of offered models shall be strictly as defined in standard published catalogue of the manufacturer only).	
	5	Housing	Weather proof as per IP-67, metallic housing with durable corrosion resistant coating
	6.	Electrical connection	½" NPT(F) FOUNDATION Fieldbus/PROFIBUS PA compatible
	7.	Process connection	½" NPT (F)
	8.	Operating Ambient temperature	85 deg C without display. 70 deg C with display.
		Overpressure	150% of max operating pressure
	9	Accessories	-Diaphragm seal, pulsation dampeners, syphon etc. as required by service and operating condition. -2 valve manifold for absolute & gauge pressure transmitters, -3-valve for DP and 5 valve manifold for level/flow applications. -The valve manifold shall be non-integral type. -For hazardous area, enclosure as described in NEC article 5.

6	End connection	1/2 inch NPT (M)	1/2 inch or 3/4 inch NPT (M).	Process connection as per ASME PTC and drain/vent 15 NB
7	Accuracy	±1% of span	± 1% of span	± 2%
8	Scale	Linear, 270° arc graduated in metric units	Linear, 270° arc graduated in °C	Linear vertical
9	Range selection	Shall cover 125% of max. operating press	Shall cover 125% of max. operating temp	Shall cover max. Operating level.
10	Over range	125% of FSD	125% of FSD	-
11	Housing	Weather and dust proof as per IP-55	Weather and dust proof as per IP-55	CS/304 SS leak proof
12	Zero/span adjustment	Provided	Provided	--
13	Identification	Engraved with service legend or laminated phenolic name plate		
14	Accessories	Blow out disc, siphon, snubber, pulsation dampener, chemical seal (if required by process) gauge isolation valve	SS Thermowell	Gasket for all KEL-F shield for transparent type vent and drain valves of Steel/SS as per CS/Alloy process Requirement.
Notes:-				

*Bicolour type level gauges will be provided for applications involving steam and water except for condensate and feed water services.

Length of gauge glass shall not be more than 1400 mm. If the vessel is higher, multiple gauge glasses with 50 mm overlapping shall be provided.

Where the process fluids are corrosive, viscous, solid bearing or slurry type, diaphragm seals shall be provided. Parts below the diaphragm shall be removable for cleaning. The entire volume above the diaphragm shall be completely filled with an inert liquid suitable for the application.

10.	Mounting	2 inch pipe mounting with Enclosure/Rack/Canopy.
11.	Diagnostics & display	Self-Indicating feature and digital display on transmitter

Notes

- For primary air/ secondary air/flue gas/ furnace pressure applications, DP type transmitters shall be provided for pressure measurement below 2000 mmwc.
- LVDT type is not acceptable.
- Where the process fluids are corrosive, viscous, solid bearing or slurry type, diaphragm seals shall be provided. Parts below the diaphragm shall be removable for cleaning. The entire volume above the diaphragm shall be completely filled with an inert liquid suitable for the application.

1.00.00	**GENERAL:**
1.01.00	Actuators shall be designed for valve operation to ensure proper function in accordance with specifications given below and complying to EN15714-2 or equivalent. All standards, specifications and codes of practice referred to herein shall be the latest editions including all applicable official amendments and revisions.
1.02.00	This sub-section of specification is applicable for following types of electric actuators:
1.02.01	**Modulating duty electric actuators:** These shall be provided as per standard practice of OEM of equipment, meeting other requirements of specifications. For specifications of Blade pitch actuators, refer clause no. 5.00.00 of this chapter.
1.02.02	**Electric actuators for valves/ dampers/ gates (other than covered in 1.02.01):** These actuators shall be Non-Intrusive type electric actuators. The interface of these actuators with DDCMIS shall be of two types viz. with Hardwired interface and with Fieldbus interface. The common requirements of both these type of actuators are specified at clause 2.00.00, specific requirements of Non-Intrusive hardwired actuators are specified at clause 3.00.00 and specific requirements of Non-Intrusive fieldbus actuators are specified at clause 4.00.00. The applications where these two types of actuators are to be provided is specified in Part-A of Technical Specifications.
2.00.00	**COMMON REQUIREMENTS FOR NON INTRUSIVE ELECTRIC ACTUATORS**
2.01.00	**TYPE:**
2.01.01	The actuators shall have integral starters with built in SPP (Single Phasing Preventer). 415 V, 3 phase 3 wire power supply shall be given to the actuator from switch board as applicable through a switch fuse unit. Control voltage of the motor starter shall be 110 V AC / 24 V DC, derived suitably from 415V power supply.
2.01.02	The actuators shall be Non- Intrusive electric actuator. All actuator settings including torque, limit shall be possible without opening the actuator cover and LCD indication shall be available integral to actuator body.
2.02.00	**RATING:** (a) Supply Voltage & frequency: 415V +/- 10%, 3 Phase, 3 Wire & 50HZ +/-5%. (b) Sizing: Open/Close at rated speed against designed differential pressure at 90% of rated voltage. For ON/OFF type: Three successive open-close operations or 15 minutes, whichever is higher. For inching type: 150 starts per hour or required cycles, whichever is higher.
2.03.00	**CONSTRUCTION:** (a) Enclosure: Totally enclosed weatherproof, minimum IP-68 degree of protection. (b) Manual Wheel: Shall disengage automatically during motor operation.

2.04.00	**MOTOR:** (a) Type : Squirrel cage induction motor suitable for Direct On Line (DOL)starting. (b) Enclosure: Totally enclosed, self-ventilated. (c) Insulation Class F. Temperature rise 70 Deg C. over 50 Deg C ambient. (d) Bearings: Double shielded, grease lubricated antifriction. (e) Earth Terminals: Two (f) Protection: Single Phasing Protection, Over heating protection through Thermostat (as applicable) and wrong phase sequence protection shall be provided over and above other protection features standard to bidder's design. Suitable means shall be provided to diagnose the type of fault locally.
2.05.00	**POSITION/TORQUE TRANSMITTER:** The Position/ Limit measurement shall be done using absolute encoders which will give information of position/ limit in both the directions. Electronic measurement of torque shall be provided.
2.06.00	**LOCAL OPERATION:** It shall be possible to operate the actuator locally also. Lockable local/remote selection shall be provided on the actuator.
2.07.00	**LCD DISPLAY:** A local LCD display shall be provided to give information regarding actuator alarms, status and valve position indications as a minimum in local.
2.08.00	**WIRING:** Suitable voltage grade copper wire.
2.09.00	**TERMINAL BLOCK:** For power cables, the grade of TBs shall be minimum 650V.
2.10.00	**ACCESSORIES:** All required accessories (if applicable) for calibration / settings/ configuration of various parameters of actuator shall be provided. For quantities, please refer Part A of technical specifications.

2.11.00 **SIL CERTIFICATION:**

All actuators shall be certified for SIL 2 or better.

3.00.00 **SPECIFIC REQUREMENTS FOR NON INTRUSIVE HARDWIRED ACTUATORS**

3.01.00 **INTERFACES:**

For ON-OFF and INCHING type actuators interface with the control system shall be through hardwired signal only.

(a) Open/Close command, open/ close status and disturbance monitoring signal (common contact for Overload, Thermostat, control supply failure, L/R selector switch at local & other protections operated) shall be provided hardwired.

(b) The actuator shall be able to accept open/close command at 24V DC with max. 2.5VA load from control system. Accordingly suitable isolated interface in the actuator shall be provided.

(c) Open/close command termination logic shall be suitably built inside actuator.

(d) For typical wiring diagram Refer Tender Drawing No. 0000-999-POI-A-063 (Except plug & socket connector, if not applicable)

3.02.00 **TERMINAL BOX:**

Suitable terminals/ connectors, integral to actuator, for terminating instrumentation & power cables shall be provided. Necessary glands for power cables and instrumentation cables shall be provided.

3.03.00 ~~**TRAINING:**~~

~~Contractor shall provide training on Non-Intrusive hardwired Electric Actuator for Employer's personnel. The duration of the training shall be as elaborated in Part-C, Section-VI of technical specifications.~~

4.00.00 **SPECIFIC REQUIREMENTS FOR NON INTRUSIVE FIELDBUS ACTUATORS**

4.01.00 **INTERFACES:**

For ON-OFF and INCHING type actuators interface with the control system shall be through fieldbus network.

(a) Open/ close commands, open/ close feedback status, disturbance signal etc. shall be available to the Control System through the fieldbus network along with diagnostics. The detailed diagnostics including the actuator operating data shall be available to the DDCMIS through the fieldbus network.

(b) All actuators shall be Foundation Fieldbus/ Profibus compatible. However the exact protocol shall be based on finalized protocol of DDCMIS. If Profibus DP protocol is envisaged then actuator shall have two (redundant) Profibus DP ports for connecting the redundant Profibus DP cables. That is if one profibus cable is cut or not working/ not available, then complete actuator functionality shall be available through the second redundant cable without any manual intervention.

(c) Open/close command termination logic shall be suitably built inside actuator.

4.02.00 TERMINAL BOX:

Suitable terminals/ connectors, integral to actuator, for terminating fieldbus cables and power cables shall be provided. Necessary glands for power cables and armored fieldbus cables shall be provided.

4.03.00 TRAINING:

Contractor shall provide training on Non-Intrusive Fieldbus Electric Actuator along with detail training on Foundation Fieldbus/ Profibus interface used in actuator for Employer's personnel. The duration of the training shall be as elaborated in Part-C, Section-VI of technical specifications.

5.00.00 SPECIFIC REQUIREMENTS FOR BLADE PITCH ACTUATORS

Sl No.	Description	Requirement
1.	Duty	Continuous duty / Modulation,
2.	Operating Ambient Temperature	-20 to +60 Deg C or better
3.	Enclosure Protection	IP 68
4.	Resolution/ Precision	0.1%- 0.2% or better of total travel
5.	Supply Voltage & frequency	415V +/- 10%, 3 Phase, 50HZ +/-5% or 230V +/- 10%, Single Phase, 50Hz +/- 5%
6.	Motor Suitable for	Continuous Duty
7.	Motor insulation Class	F
8.	Analog Control	4-20mA, (24VDC)
9.	Position Transmitter	4-20mA (24VDC)
10.	Integral Starter	Yes
11.	Terminal Block	For power cables, the grade of TBs shall be minimum 600V
12.	Accessories (if applicable)	for calibration / settings/ configuration of various parameters of actuator shall be provided
13.	Hand wheel	Yes
14.	Standard Compliance	EN 15714-2 Class D or equivalent

FIELD MOUNTED LOCAL JUNCTION BOXES

(i)	No. of ways	12/24/36/48/64/72/96/128 with 20% spares terminals.
(ii)	Material and Thickness	4mm thick Fiberglass Reinforced Polyester (FRP).
(iii)	Type	Screwed at all four corners for door. Door gasket shall be of synthetic rubber.
(iv)	Mounting clamps and accessories	Suitable for mounting on walls, columns, structures etc. The brackets, bolts, nuts, screws, glands required for erection shall be of SS, included in Bidders scope of supply.
(v)	Type of terminal blocks	Rail mounted cage-clamp type suitable for conductor size upto 2.5 mm^2. A M6 earthing stud shall be provided.
(vi)	Protection Class	IP: 55 minimum for indoor & IP-65 minimum for outdoor applications.
(vii)	Grounding	To be provided.
(viii)	Color	RAL 7035

CONDUITS

Conduits shall be generally used for interconnecting cables from field instruments to Local JB's. All rigid conduits, couplings and elbows shall be hot dipped galvanised rigid mild steel in accordance with IS: 9537 Part-I (1980) and Part-II (1981). The conduit interior and exterior surfaces shall have continuous zinc coating with an overcoat of transparent enamel lacker or zinc chromate. Flexible conduit shall be heat resistant **terne coated steel** with , water leak, fire and rust proof protected *for the areas of* Mills,Drum, Main Steam, RH steam Air Heaters and Furnace, BFPDT's .

And for remaining applications, water leak, fire and rust proof flexible GI conduits shall be provided. The temperature rating of flexible conduit shall be suitable for actual application.

All rigid conduit fittings shall conform to the requirements of IS: 2667, 1976. Galvanized steel fitting shall be used with steel conduit. All flexible conduit fittings shall be liquid tight, galvanized steel. The end fittings shall be compatible with the flexible conduit supplied.

Conduit sealing, explosion proof, dust proof and other types of special fittings shall be provided as required by these specifications and shall be consistent with the area and equipment with which they are installed. Fittings installed outdoors and in damp locations shall be sealed and gasketed. Hazardous area fittings and conduits sealing shall conform with NEC requirements for the area classification.

Contractor shall provide double locknuts on all conduit terminations not provided with threaded hubs and couplings. Water tight conduit unions and rain tight conduit hubs shall be utilised for all the application which shall be exposed to weather. Moisture pockets shall be eliminated from conduits.

Conduits shall be securely fastened to all boxes and cabinets.

CABLE SUB-TRAY & SUPPORT

The cable sub-trays and the supporting system, to be generally used between Local/Group JBs and the main cable trays and the same shall be furnished and installed by the Contractor. It is the assembly of sections and associated fittings forming a rigid structural system used to support the cable from the equipment or instrument enclosure upto the main cable trays (trunk route).

The covers on the cable sub-trays shall be used for protection of cables in areas where damage may occur from falling objects, welding spark, corrosive environment, etc. & shall be electrically continuous and solidly grounded.

10.00.00	**CONTROL CABINETS / PANELS / DESKS**
10.01.00	The cabinets shall be IP-22 protection class. The Contractor shall ensure that the packaging density of equipment in these cabinets is not excessive and abnormal temperature rise, above the cabinet temperature during normal operation or air-conditioning failure, is prevented by careful design. This shall be demonstrated to the Employer during the factory testing of the system. The Contractor shall ensure that the temperature rise is limited to 10 deg. C above ambient and is well within the safe limits for system components even under the worst condition and specification requirements for remote I/O cabinets. Ventilation blowers shall be furnished as required by the equipment design and shall be sound proof to the maximum feasible extent. If blowers are required for satisfactory system operation, dual blowers with blower failure alarm shall be provided in each cabinet with proper enclosure and details shall be furnished with proposal. Suitable louvers with wire mesh shall be provided on the cabinet.
10.01.01	The cabinets shall be designed for front access to system modules and rear access to wiring and shall be designed for bottom entry of the cables.
10.01.02	The cabinets shall be totally enclosed, free standing type and shall be constructed with minimum 2 mm thick steel plate frame and 1.6 mm thick CRCA steel sheet or as per supplier's standard practice for similar applications, preferred height of the cabinet is 2200 mm. The cabinets shall be equipped with full height front and rear doors. The floor mounting arrangement for other cabinets shall be as required by the Employer and shall be furnished by the Contractor during detailed engineering.
10.01.03	Cabinet doors shall be hinged and shall have turned back edges and additional braking where required ensuring rigidity. Hinges shall be of concealed type. Door latches shall be of three-point type to assure tight closing. Detachable lifting eyes or angles shall be furnished at the top of each separately shipped section and all necessary provisions shall be made to facilitate handling without damage. Front and rear doors shall be provided with locking arrangements with a master key for all cabinets. If width of a cabinet is more than 800 mm, double doors shall be provided.
10.01.04	Two spray coats of inhibitive epoxy primer-surface shall be applied to all exterior and interior surfaces. A minimum of 2 spray coats of final finish colour shall be applied to all surfaces. The final finished thickness of paint film on steel shall not be less than 65-75 micron for sheet thickness of 2 mm and 50 microns for sheet thickness of 1.6

mm. The finish colors for exterior and interior surfaces shall conform to following shades:

(a.) Exterior:- As per RAL 9002 (End panel sides RAL 5012), to be finalised during detailed engineering.

(b.) Interior:- Same as above.

Paint films which show sags, checks or other imperfections shall not be acceptable.

As an alternative, single coat of anodic dipcoat primer along with single textured powder coating with epoxy polyester meeting the thickness requirement is also acceptable.

Refer Subsection Basic Design Criteria, Part-B, Section-VI for grounding requirements.

The mimic shall be configured on the OWS/CRTs and it shall be possible to control, monitor and operate the plant from the same.

The technical specification covering panel fabrication details, wiring and termination details etc. shall be as described under Sub-Section INST CABLE of this specification.

APPLICABLE FOR TYPE - I

TECHNICAL SPECIFICATION (C&I) FOR
SCS SYSTEM

`

SPECIFICATION FOR MEASURING INSTRUMENTS (PRIMARY & SECONDARY) AND CONTROL PANEL.

CLAUSE NO.	TECHNICAL REQUIREMENTS
1.00.00	**MEASURING INSTRUMENTS (PRIMARY AND SECONDARY)**
1.01.00	Measuring instruments/equipment and subsystems offered by the Bidder shall be from reputed experienced manufacturers of specified type and range of equipment, whose guaranteed and trouble free operation has been proven. Refer Sub-section Basic Design Criteria. Further, all instruments shall be of proven reliability, accuracy, and repeatability requiring a minimum of maintenance and shall comply with the acceptable international standards and shall be subject to Employer's approval.
1.02.00	Every panel-mounted instrument requiring power supply shall be provided with easily replaceable glass cartridge fuses of suitable rating. Every instrument shall be provided with a grounding terminal and shall be suitably connected to the panel grounding bus.
1.03.00	All transmitters, sensors, switches and gauges for parameters like pressure, temperature, level, flow etc. as required for the safe and efficient operation and maintenance as well as for operator and management information (including all computation) of equipment in the system under the scope of specification shall be provided on as required basis with in quoted lump sum price. The Contractor shall furnish all instrumentation / Control equipment & accessories under this specification as per technical specification, ranges, makes & model as approved by the Employer during detailed engineering.
1.04.00	The necessary root valves, impulse piping, drain cocks, gauge-zeroing cocks, valve manifolds and all the other accessories required for mounting/erection of these local instruments shall be furnished, even if not specifically asked for, on as required basis. The contacts of equipment mounted instruments, sensors, switches etc. for external connection including spare contacts shall be wired out in flexible/rigid conduits, independently to suitably located common junction boxes. The proposal shall include the necessary cables, flexible conduits, junction boxes and accessories for the above purpose. Double root valves shall be provided for all pressure tapping where the pressure exceeds 40 Kg./sq.cm.

CLAUSE NO.	TECHNICAL REQUIREMENTS

16.00.00 **FIELD INSTRUMENTS BASED ON FIELDBUS**

The following instruments shall be connected to DDCMIS through fieldbus i.e. FOUNDATION Fieldbus/PROFIBUS PA protocol complying to IEC 61158 directly from transmitter.

16.01.00 **Electronic Transmitter for Pressure, Differential Pressure and DP based Flow / Level measurements.**

S No.	Features	Essential/Minimum Requirements
1.	Type of Transmitter	FOUNDATION Fieldbus/PROFIBUS PA based output

CLAUSE NO.	TECHNICAL REQUIREMENTS
	2 Accuracy — ± 0.060 % of calibrated range (minimum) for calibrated range greater than 400 mmwc. +0.065% of calibrated range (minimum) for calibrated range greater than 250 kg/cm2. ± 0.10 % of calibrated range (minimum) for calibrated range less than 400 mmwc.
	3. Stability — 0.25 % of calibrated range for 10 years for calibrated range greater than equal to 400 mmwc on standard conditions of manufacturer. 0.2 % of calibrated range for 1 years for calibrated range less than 400 mmwc on standard conditions of manufacturer. 0.15% of calibrated range for 5 years for DPT with static pressure greater than 250 kg/cm2.
	4 Turn down — 50:1 for greater than or equal to span of 400mmwcl. 20:1 for span below 400mmwcl. 10:1 for span greater than 250 kg/cm2
	(Above mentioned (2,3,4) parameters/features of offered models shall be strictly as defined in standard published catalogue of the manufacturer only).
	5 Housing — Weather proof as per IP-67, metallic housing with durable corrosion resistant coating
	6. Electrical connection — ½" NPT(F) FOUNDATION Fieldbus/PROFIBUS PA compatible
	7. Process connection — ½" NPT (F)
	8. Operating Ambient temperature — 85 deg C without display. 70 deg C with display. Overpressure — 150% of max operating pressure
	9 Accessories — -Diaphragm seal, pulsation dampeners, syphon etc. as required by service and operating condition. -2 valve manifold for absolute & gauge pressure transmitters, -3-valve for DP and 5 valve manifold for level/flow applications. -The valve manifold shall be non-integral type. -For hazardous area, enclosure as described in NEC article 5.

CLAUSE NO.	TECHNICAL REQUIREMENTS
	10. Mounting — 2 inch pipe mounting with Enclosure/Rack/Canopy. 11. Diagnostics & display — Self-Indicating feature and digital display on transmitter Notes - For primary air/ secondary air/flue gas/ furnace pressure applications, DP type transmitters shall be provided for pressure measurement below 2000 mmwc. - LVDT type is not acceptable. - Where the process fluids are corrosive, viscous, solid bearing or slurry type, diaphragm seals shall be provided. Parts below the diaphragm shall be removable for cleaning. The entire volume above the diaphragm shall be completely filled with an inert liquid suitable for the application.

4.00.00 **SPECIFICATIONS FOR PR. GAUGE, D.P. GAUGE, TEMP. GAUGE AND LEVEL GAUGE.**

Sl. No	FEATURES	ESSENTIAL/MINIMUM REQUIREMENTS		
		Pr. Gauge/ DP Gauge/ Draught gauges	Temperature Gauge	Level Gauge
1	Sensing Element	Bourdon for high pressure, Diaphragm/ Bellow for low pr	Inert gas actuated/ Liquid filled other than mercury	Tempered " toughened Borosilicate gauge-glass steel armoured reflex or transparent type
2	Material of sensing element	SS 316	SS 316	
3	Material of movement	SS 304	SS 304	
4	Body material	Die-cast aluminium	Die-cast aluminium	Forged carbon steel/304 SS
5	Dial size	150mm	150 mm	Tubular covering entire range
6	End connection	1/2 inch NPT (M)	1/2 inch or 3/4 inch NPT (M)	Process connection as per ASME PTC and drain/vent 15 NB

7	Accuracy	±1% of span	± 1% of span	± 2%
8	Scale	Linear, 270° arc gradualed in metric units	Linear, 270° arc gradualed in °C	Linear vertical
9	Range selection	Shall cover 125% of max. operating press	Shall cover 125% of max. operating temp	Shall cover max. Operating level.
10	Over range	125% of FSD	125% of FSD	-
11	Housing	Weather and dust proof as per IP-55	Weather and dust proof as per IP-55	CS/304 SS leak proof
12	Zero/span adjustment	Provided	Provided	–
13	Identification	Engraved with service legend or laminated phenolic name plate		
14	Accessories	Blow out disc, siphon, snubber, pulsation dampener, chemical seal (if required by process) gauge isolation valve	SS Thermowell	Gasket for all KEL-F shield for transparent type vent and drain valves of Steel/SS as per CS/Alloy process Requirement.
Notes:-				

*Bicolour type level gauges will be provided for applications involving steam and water except for condensate and feed water services.

Length of gauge glass shall not be more than 1400 mm. If the vessel is higher, multiple gauge glasses with 50 mm overlapping shall be provided.

Where the process fluids are corrosive, viscous, solid bearing or slurry type, diaphragm seals shall be provided. Parts below the diaphragm shall be removable for cleaning. The entire volume above the diaphragm shall be completely filled with an inert liquid suitable for the application.

CLAUSE NO.	TECHNICAL REQUIREMENTS
1.00.00	**CODES AND STANDARDS:**
1.01.00	All standards, specifications and codes of practice referred to herein shall be the latest editions including all applicable official amendments and revisions. In case of conflict between this specification and codes, standards, etc, the former shall prevail.
2.00.00	**ELECTRIC ACTUATORS WITH INTEGRAL STARTERS**
2.01.00	**TYPE:**
2.01.01	The actuators shall have integral starters along with over load relays with built in SPP (Single Phasing Preventer). Alternatively Smart non-intrusive actuators are also acceptable. A 415, 3 phase 3 wire power supply shall be given to the actuator from switch board as applicable through a switch fuse unit. Control voltage of the motor starter shall be 110 V AC / 24 V DC, derived suitably from 415V power supply.
2.01.02	In case supplier's standard control voltage for Open/Close contactors is 110V AC, the same is acceptable if suitable Opto Isolation circuit is provided with coupling relays for 24 V DC command inputs.
2.02.00	**INTERFACES:**
2.02.01	Open/Close command termination logic with position & torque Limit Switches, positioner circuit shall be suitably built in the PCB inside the actuator. (a) For Binary Drive (both ON-OFF and INCHING type) :- Open/Close command & status thereof and disturbance monitoring signal (common contact for Overload, Thermostat, control supply failure, L/R selector switch at local & other protections operated) shall be provided. Interface with the control system shall be through hardware signal only. Inter posing relays provided (with coil burden 2.5 VA) in the actuator shall be energized to initiate opening and closing, by 24V DC signal from the external control system. (b) For Modulating Drive:- The command to actuator shall be in form of 4-20mA signal. The necessary positioning circuit and motor protection shall be provided. Also these actuators shall be Continuous modulating type. (c) Open/close command termination logic shall be suitably built inside actuator.
2.03.00	**RATING:** (a) Supply Voltage & frequency: 415V +/- 10%, 3 Phase, 3 Wire 50HZ +/-5%. (b) Sizing:- Open/Close at rated speed against designed differential pressure at 90% of rated voltage. For isolating service:- Three successive open-close operations or 15 mins, whichever is higher. For regulating service 3000 starts per hour or required cycles, whichever is higher.

2.04.00 CONSTRUCTION:

(a) Enclosure:

Totally enclosed weatherproof minimum IP-55 degree of protection.

(b) Gear Train :

Metal (Fibre gears are not acceptable)) self-locking to prevent drift under torque switch (where ever applicable) spring pressure when motor is de-energized.

(c) Manual Wheel:

Shall disengage automatically during motor operation.

2.05.00 MOTOR :

(a) Type :

Squirrel cage induction motor suitable for Direct On Line (DOL)starting.

(b) Enclosure:

Totally enclosed, self ventilated IP-55 degree of protection.

(c) Insulation

Class B or better. Temperature rise 70 Deg C. over 50 Deg C ambient

(d) Bearings:

Double shielded, grease lubricated antifriction.

(e) Earth Terminals:

Two

(f) Protection:

Single Phasing Protection, Over heating protection through Thermostat (as applicable) and wrong phase sequence protection shall be provided over and above other protection features standard to Contractor's design Suitable means shall be provided to diagnose the type of fault locally.

2.06.00 POSITION/TORQUE SWITCHES:

2.06.01 Four nos. (2 each in open and close position) position limit switches/contacts and two nos. (one in open and other in close direction) torque switches/contacts each having two nos. NO and two nos. NC contacts shall be provided.

Torque switches/contacts shall be bypassed in both the end positions with the other end Limit switches/contacts.

	Limit switches/contacts Limit switches shall be Silver plated with high conductivity and non –corrosive type. Contact rating shall be sufficient to meet the requirement of Control System subject to a minimum of 60 V, 6 VA rating. Protection class shall be IP-55. Limit switch/contacts and disturbance signals shall be available to DCS even when the power supply to the actuators is not available.
2.07.00	**LOCAL OPERATION:**
2.07.01	It shall be possible to operate the actuator locally also. Lockable local/remote selection shall be provided on the actuator.
2.08.00	**POSITION INDICATOR :**
2.08.01	To be provided for 0 to 100% travel.
2.09.00	**POSITION TRANSMITTER (FOR MODULATING/INCHING TYPE) :**
2.09.01	As required. Suitable for stabilized 4-20 mA signal, 2 wire inductive type, External 24 volts DC operated.
2.10.00	**WIRING :**
2.10.01	Suitable voltage grade copper wire.
2.11.00	**TERMINAL BOX :**
	(i) 9 pin plug and socket (1 no. per actuator to suit 4 pair 0.5 sq.mm. copper overall shielded (16 mm OD), instrumentation cable) suitably mounted in the starter box itself to terminate open/close command and status feedback signals with external control systems. (ii) Additional one number 9 pin plug and socket (to suit 4 pair 0.5 sq.mm copper (16 mm OD) individual and overall shielded instrumentation cable) suitably mounted in the starter box itself for actuators with 4-20 mA position transmitters. (iii) Necessary glands for power cables shall be provided.
2.12.00	**TERMINAL BLOCK :**
2.12.01	650V grade. For power cables.
2.13.00	**SPACE HEATER :**
2.13.01	Space heater of suitable rating. The supply shall be derived from the main power supply available in the actuator.

FIELD MOUNTED LOCAL JUNCTION BOXES

(i)	No. of ways	12/24/36/48/64/72/96/128 with 20% spares terminals.
(ii)	Material and Thickness	4mm thick Fiberglass Reinforced Polyester (FRP).
(iii)	Type	Screwed at all four corners for door. Door gasket shall be of synthetic rubber.
(iv)	Mounting clamps and accessories	Suitable for mounting on walls, columns, structures etc. The brackets, bolts, nuts, screws, glands required for erection shall be of SS, included in Bidders scope of supply.
(v)	Type of terminal blocks	Rail mounted cage-clamp type suitable for conductor size upto 2.5 mm^2. A M6 earthing stud shall be provided.
(vi)	Protection Class	IP: 55 minimum for indoor & IP-65 minimum for outdoor applications.
(vii)	Grounding	To be provided.
(viii)	Color	RAL 7035

CONDUITS

Conduits shall be generally used for interconnecting cables from field instruments to Local JB's. All rigid conduits, couplings and elbows shall be hot dipped galvanised rigid mild steel in accordance with IS: 9537 Part-I (1980) and Part-II (1981). The conduit interior and exterior surfaces shall have continuous zinc coating with an overcoat of transparent enamel lacker or zinc chromate. Flexible conduit shall be heat resistant **terne coated steel** with , water leak, fire and rust proof protected *for the areas of* Mills,Drum, Main Steam, RH steam Air Heaters and Furnace, BFPDT's .

And for remaining applications, water leak, fire and rust proof flexible GI conduits shall be provided. The temperature rating of flexible conduit shall be suitable for actual application.

All rigid conduit fittings shall conform to the requirements of IS: 2667, 1976. Galvanized steel fitting shall be used with steel conduit. All flexible conduit fittings shall be liquid tight, galvanized steel. The end fittings shall be compatible with the flexible conduit supplied.

Conduit sealing, explosion proof, dust proof and other types of special fittings shall be provided as required by these specifications and shall be consistent with the area and equipment with which they are installed. Fittings installed outdoors and in damp locations shall be sealed and gasketed. Hazardous area fittings and conduits sealing shall conform with NEC requirements for the area classification.

Contractor shall provide double locknuts on all conduit terminations not provided with threaded hubs and couplings. Water tight conduit unions and rain tight conduit hubs shall be utilised for all the application which shall be exposed to weather. Moisture pockets shall be eliminated from conduits.

Conduits shall be securely fastened to all boxes and cabinets.

CABLE SUB-TRAY & SUPPORT

The cable sub-trays and the supporting system, to be generally used between Local/Group JBs and the main cable trays and the same shall be furnished and installed by the Contractor. It is the assembly of sections and associated fittings forming a rigid structural system used to support the cable from the equipment or instrument enclosure upto the main cable trays (trunk route).

The covers on the cable sub-trays shall be used for protection of cables in areas where damage may occur from falling objects, welding spark, corrosive environment, etc. & shall be electrically continuous and solidly grounded.

10.00.00	**CONTROL CABINETS / PANELS / DESKS**
10.01.00	The cabinets shall be IP-22 protection class. The Contractor shall ensure that the packaging density of equipment in these cabinets is not excessive and abnormal temperature rise, above the cabinet temperature during normal operation or air-conditioning failure, is prevented by careful design. This shall be demonstrated to the Employer during the factory testing of the system. The Contractor shall ensure that the temperature rise is limited to 10 deg. C above ambient and is well within the safe limits for system components even under the worst condition and specification requirements for remote I/O cabinets. Ventilation blowers shall be furnished as required by the equipment design and shall be sound proof to the maximum feasible extent. If blowers are required for satisfactory system operation, dual blowers with blower failure alarm shall be provided in each cabinet with proper enclosure and details shall be furnished with proposal. Suitable louvers with wire mesh shall be provided on the cabinet.
10.01.01	The cabinets shall be designed for front access to system modules and rear access to wiring and shall be designed for bottom entry of the cables.
10.01.02	The cabinets shall be totally enclosed, free standing type and shall be constructed with minimum 2 mm thick steel plate frame and 1.6 mm thick CRCA steel sheet or as per supplier's standard practice for similar applications, preferred height of the cabinet is 2200 mm. The cabinets shall be equipped with full height front and rear doors. The floor mounting arrangement for other cabinets shall be as required by the Employer and shall be furnished by the Contractor during detailed engineering.
10.01.03	Cabinet doors shall be hinged and shall have turned back edges and additional braking where required ensuring rigidity. Hinges shall be of concealed type. Door latches shall be of three-point type to assure tight closing. Detachable lifting eyes or angles shall be furnished at the top of each separately shipped section and all necessary provisions shall be made to facilitate handling without damage. Front and rear doors shall be provided with locking arrangements with a master key for all cabinets. If width of a cabinet is more than 800 mm, double doors shall be provided.
10.01.04	Two spray coats of inhibitive epoxy primer-surface shall be applied to all exterior and interior surfaces. A minimum of 2 spray coats of final finish colour shall be applied to all surfaces. The final finished thickness of paint film on steel shall not be less than 65-75 micron for sheet thickness of 2 mm and 50 microns for sheet thickness of 1.6

mm. The finish colors for exterior and interior surfaces shall conform to following shades:

(a.) Exterior:- As per RAL 9002 (End panel sides RAL 5012), to be finalised during detailed engineering.

(b.) Interior:- Same as above.

Paint films which show sags, checks or other imperfections shall not be acceptable.

As an alternative, single coat of anodic dipcoat primer along with single textured powder coating with epoxy polyester meeting the thickness requirement is also acceptable.

Refer Subsection Basic Design Criteria, Part-B, Section-VI for grounding requirements.

The mimic shall be configured on the OWS/CRTs and it shall be possible to control, monitor and operate the plant from the same.

The technical specification covering panel fabrication details, wiring and termination details etc. shall be as described under Sub-Section INST CABLE of this specification.

`

SPECIFICATION FOR MEASURING INSTRUMENTS (PRIMARY & SECONDARY) & LOCAL CONTROL PANEL

CLAUSE NO.	TECHNICAL REQUIREMENTS
1.00.00	**MEASURING INSTRUMENTS (PRIMARY AND SECONDARY)**
1.01.00	Measuring instruments/equipment and subsystems offered by the Bidder shall be from reputed experienced manufacturers of specified type and range of equipment, whose guaranteed and trouble free operation has been proven. Further, all instruments shall be of proven reliability, accuracy, and repeatability requiring a minimum of maintenance and shall comply with the acceptable international standards and shall be subject to Employer's approval.
1.02.00	Every panel-mounted instrument requiring power supply shall be provided with easily replaceable glass cartridge fuses of suitable rating. Every instrument shall be provided with a grounding terminal and shall be suitably connected to the panel grounding bus.
1.03.00	All transmitters, sensors, switches and gauges for parameters like pressure, temperature, level, flow etc. as required for the safe and efficient operation and maintenance as well as for operator and management information (including all computation) of equipment in the system under the scope of specification shall be provided on as required basis with in quoted lump sum price. The Contractor shall furnish all Instrumentation / Control equipment & accessories under this specification as per technical specification, ranges, makes & model as approved by the Employer during detailed engineering.
1.04.00	The necessary root valves, impulse piping, drain cocks, gauge-zeroing cocks, valve manifolds and all the other accessories required for mounting/erection of these local instruments shall be furnished, even if not specifically asked for, on as required basis. The contacts of equipment mounted instruments, sensors, switches etc. for external connection including spare contacts shall be wired out in flexible/rigid conduits, independently to suitably located common junction boxes. The proposal shall include the necessary cables, flexible conduits, junction boxes and accessories for the above purpose. Double root valves shall be provided for all pressure tapping where the pressure exceeds 40 Kg./sq.cm.
1.07.00	The instruments, for which technical specification is not attached, shall be supplied as per the standard and proven practice of the contractor. The same shall be established by the contractor during detailed engineering by providing detailed explanation/concepts, if required by the employer, of such implementation along with standard documentation.

CLAUSE NO.	TECHNICAL REQUIREMENTS

Notes ***(Common for a) to d) above):-***

1. In case of failure (open or burn-out) of RTD/thermocouple, temp. Transmitter shall provide low temperature output.
2. Composite Accuracy is to be calculated as summation of all applicable accuracies of temp transmitter, for converting sensor input to output in 4-20 mA (e.g., basic accuracy, digital accuracy, D/A accuracy, etc.) and temperature effect on these accuracies at ambient temperature of 50 deg C, based on the figure/ formula given in the standard product catalogue for span as specified above for various types of Temperature Elements specified. All such accuracy/ temp effect figures in catalogue shall be first converted to deg C, and then percentage of this converted accuracy in specified span shall be calculated to compare with the specified composite accuracy figures. All temperature transmitters are to be interchangeable (i.e. can be used for either RTD or thermocouple) and composite accuracy shall be met for each type of input specified in (i) & (ii).

4.00.00 **SPECIFICATIONS FOR PR. GAUGE, D.P. GAUGE, TEMP. GAUGE AND LEVEL GAUGE.**

Sl. No	FEATURES	ESSENTIAL/MINIMUM REQUIREMENTS		
		Pr. Gauge/ DP Gauge/ Draught gauges	Temperature Gauge	Level Gauge
1	Sensing Element	Bourdon for high pressure, Diaphragm/ Bellow for low pr.	Inert gas actuated/ Liquid filled other than mercury	Tempered * toughened Borosilicate gauge glass steel armoured reflex or transparent type.
2	Material of sensing element	SS 316	SS 316	
3	Material of movement	SS 304	SS 304	
4	Body material	Die-cast aluminium	Die-cast aluminium	Forged carbon steel/304 SS
5	Dial size	150mm	150 mm	Tubular covering entire range
6	End connection	1/2 inch NPT (M)	1/2 inch or 3/4 inch NPT (M).	Process connection as per ASME PTC and drain/vent 15 NB

7	Accuracy	±1% of span	± 1% of span	± 2%
8	Scale	Linear, 270° arc graduated in metric units	Linear, 270° arc graduated in °C	Linear vertical
9	Range selection	Shall cover 125% of max. operating press	Shall cover 125% of max. operating temp	Shall cover max. Operating level.
10	Over range	125% of FSD	125% of FSD	-
11	Housing	Weather and dust proof as per IP-55	Weather and dust proof as per IP-55	CS/304 SS leak proof
12	Zero/span adjustment	Provided	Provided	--
13	Identification	Engraved with service legend or laminated phenolic name plate		
14	Accessories	Blow out disc, siphon, snubber, pulsation dampener, chemical seal (if required by process) gauge isolation valve	SS Thermowell	Gasket for all KEL-F shield for transparent type vent and drain valves of Steel/SS as per CS/Alloy process Requirement.
Notes:-				

*Bicolour type level gauges will be provided for applications involving steam and water except for condensate and feed water services.

Length of gauge glass shall not be more than 1400 mm. If the vessel is higher, multiple gauge glasses with 50 mm overlapping shall be provided.

Where the process fluids are corrosive, viscous, solid bearing or slurry type, diaphragm seals shall be provided. Parts below the diaphragm shall be removable for cleaning. The entire volume above the diaphragm shall be completely filled with an inert liquid suitable for the application.

CLAUSE NO.	TECHNICAL REQUIREMENTS
9.05.00	The Contractor shall take full care while laying / installing cables as recommended by cable manufacturers regarding pulling tensions and cable bends. Cables damaged in any way during installation shall be replaced at the expense of the Contractor.
10.00.00	**FIELD MOUNTED LOCAL JUNCTION BOXES**

(i)	No. of ways	12/24/36/48/64/72/96/128 with 20% spares terminals.
(ii)	Material and Thickness	4mm thick Fiberglass Reinforced Polyester (FRP).
(iii)	Type	Screwed at all four corners for door. Door gasket shall be of synthetic rubber.
(iv)	Mounting clamps and accessories	Suitable for mounting on walls, columns, structures etc. The brackets, bolts, nuts, screws, glands required for erection shall be of SS, included in Bidders scope of supply.
(v)	Type of terminal blocks	Rail mounted cage-clamp type suitable for conductor size upto 2.5 mm^2. A M6 earthing stud shall be provided.
(vi)	Protection Class	IP: 55 minimum for indoor & IP-65 minimum for outdoor applications.
(vii)	Grounding	To be provided.
(viii)	Color	RAL 7035

11.00.00	**CONDUITS**
11.01.00	Conduits shall be generally used for interconnecting cables from field instruments to Local JB's. All rigid conduits, couplings and elbows shall be hot dipped galvanised rigid mild steel in accordance with IS: 9537 Part-I (1980) and Part-II (1981). The conduit interior and exterior surfaces shall have continuous zinc coating with an overcoat of transparent enamel lacker or zinc chromate. Flexible conduit shall be heat resistant **terne coated steel** with , water leak, fire and rust proof protected *for the areas of* Mills,Drum, Main Steam, RH steam Air Heaters and Furnace, BFPDT's . *And for remaining applications, water leak, fire and rust proof flexible GI conduits shall be provided.* The temperature rating of flexible conduit shall be suitable for actual application.
11.02.00	All rigid conduit fittings shall conform to the requirements of IS: 2667, 1976. Galvanized steel fitting shall be used with steel conduit. All flexible conduit fittings shall be liquid tight, galvanized steel. The end fittings shall be compatible with the flexible conduit supplied.
11.03.00	Conduit sealing, explosion proof, dust proof and other types of special fittings shall be provided as required by these specifications and shall be consistent with the area and equipment with which they are installed. Fittings installed outdoors and in damp locations shall be sealed and gasketed. Hazardous area fittings and conduits sealing shall conform with NEC requirements for the area classification.
11.04.00	Contractor shall provide double locknuts on all conduit terminations not provided with threaded hubs and couplings. Water tight conduit unions and rain tight conduit hubs shall be

CLAUSE NO.	TECHNICAL REQUIREMENTS
	The overload capacity of the transformer and voltage stabilizer shall not be less than 300% for 200 millisecond duration. The voltage stabilizer shall employ servo-controlled circuitry and shall maintain the specified output voltage for 0-100% load with maximum input voltage variations as indicated above. The efficiency of the stabiliser shall be 95% or better. The type and other details shall be subject to Employer's approval.
9.06.05	**AC Distribution Board (ACDB)** The details of the AC distribution board, i.e. exact, rating and number of feeders etc. of the 2x100% ACDB shall be designed to cater to the requirements of Contractors systems. 25% Spare feeders of each type and rating to be provided in each ACDB.
9.06.06	The batteries shall be heavy duty Nickel-cadmium type and shall be sized for one hour of full load operation during non-availability of AC supply / chargers. The Ni-Cd batteries shall conform to IS: 10918. The batteries shall be sized as per relevant IEEE Standards. For sizing calculation, an aging factor of 0.8 and a temperature correction factor as per manufacturer's standard at 4 deg. C electrolyte temperature (Based on temperature characteristics curve to be submitted by the Contractor at a temperature of 4 deg. C). Capacity factor, Float Correction Factor, as per Battery Supplier Standard, shall be taken into consideration, if applicable and ambient temperature shall be considered as the electrolytic temperature. The sizing of the battery shall be as approved by Employer during detailed engineering. However, Contractor shall consider a suitable voltage drop from battery room to ACDB and ACDB to load, while sizing the battery.
10.00.00	**CONTROL CABINETS / PANELS / DESKS**
10.01.00	The cabinets shall be IP-22 protection class. The Contractor shall ensure that the packaging density of equipment in these cabinets is not excessive and abnormal temperature rise, above the cabinet temperature during normal operation or air-conditioning failure, is prevented by careful design. This shall be demonstrated to the Employer during the factory testing of the system. The Contractor shall ensure that the temperature rise is limited to 10 deg. C above ambient and is well within the safe limits for system components even under the worst condition and specification requirements for remote I/O cabinets. Ventilation blowers shall be furnished as required by the equipment design and shall be sound proof to the maximum feasible extent. If blowers are required for satisfactory system operation, dual blowers with blower failure alarm shall be provided in each cabinet with proper enclosure and details shall be furnished with proposal. Suitable louvers with wire mesh shall be provided on the cabinet.
10.01.01	The cabinets shall be designed for front access to system modules and rear access to wiring and shall be designed for bottom entry of the cables.

CLAUSE NO.	TECHNICAL REQUIREMENTS
10.01.02	The cabinets shall be totally enclosed, free standing type and shall be constructed with minimum 2 mm thick steel plate frame and 1.6 mm thick CRCA steel sheet or as per supplier's standard practice for similar applications, preferred height of the cabinet is 2200 mm. The cabinets shall be equipped with full height front and rear doors. The floor mounting arrangement for other cabinets shall be as required by the Employer and shall be furnished by the Contractor during detailed engineering.
10.01.03	Cabinet doors shall be hinged and shall have turned back edges and additional braking where required ensuring rigidity. Hinges shall be of concealed type. Door latches shall be of three-point type to assure tight closing. Detachable lifting eyes or angles shall be furnished at the top of each separately shipped section and all necessary provisions shall be made to facilitate handling without damage. Front and rear doors shall be provided with locking arrangements with a master key for all cabinets. If width of a cabinet is more than 800 mm, double doors shall be provided.
10.01.04	Two spray coats of inhibitive epoxy primer-surface shall be applied to all exterior and interior surfaces. A minimum of 2 spray coats of final finish colour shall be applied to all surfaces. The final finished thickness of paint film on steel shall not be less than 65-75 micron for sheet thickness of 2 mm and 50 microns for sheet thickness of 1.6 mm. The finish colors for exterior and interior surfaces shall conform to following shades: (a.) Exterior:- As per RAL 9002 (End panel sides RAL 5012), to be finalised during detailed engineering. (b.) Interior:- Same as above.
10.01.05	Paint films which show sags, checks or other imperfections shall not be acceptable.
10.01.05	As an alternative, single coat of anodic dipcoat primer along with single textured powder coating with epoxy polyester meeting the thickness requirement is also acceptable.

CLAUSE NO.	TECHNICAL REQUIREMENTS

The vibration monitor racks with power supplies shall be mounted in a separate self standing cabinet to be located in control room. The number of racks and power supplies shall be such that on failure of a single power supply/module, not more than four monitors shall be affected. The vibration monitoring cabinet shall be fed from redundant 24V DC feeders with auto changeover scheme.

The power supply arrangement for monitors shall ensure that failure of one power supply shall not affect any monitoring function in the system. Also any power supply failure /earth fault in any of the monitors will be isolated without affecting other monitors/ common power supply. If 230 V AC UPS power supply is required for panel PC/ desktop PC, UPS/Mini UPS for the same shall be provided by the contractor.

The functional requirement for vibration monitoring system shall include but not be limited to the following:

- Vibration monitor front face status indications shall be available for indications of healthy conditions of pick up circuit, monitor circuit and power supply. On sensor fault/wire break in the sensor circuit, the system shall have the feature of identifying the same through suitable means like the signal forced to a value less than 4 mA. In case, such a feature is not available then suitable contact shall be provided from the monitor for sensor fault.
- The facility shall be available for online functional checking of monitors.
- All vibration monitoring equipment shall be functionally tested for circuit continuity and output response. All the components & interconnection cables shall be tested to ensure compliance with the specification requirements & all other applicable codes & standards.

In case it is the proven standard practice of a Contractor to provide vibration monitoring PC with TFT LCD monitor, instead of dedicated monitors with the signal conditioning equipment in control equipment room, the same shall also be acceptable. However, all relevant functional requirements detailed above shall be met and the system shall be subject to Employer's approval.

16.00.00 FIELD INSTRUMENTS BASED ON FIELDBUS

The following instruments shall be connected to DDCMIS through fieldbus i.e. FOUNDATION Fieldbus/PROFIBUS PA protocol complying to IEC 61158 directly from transmitter.

16.01.00 Electronic Transmitter for Pressure, Differential Pressure and DP based Flow / Level measurements.

S No.	Features	Essential/Minimum Requirements
1.	Type of Transmitter	FOUNDATION Fieldbus/PROFIBUS PA based output

CLAUSE NO.	TECHNICAL REQUIREMENTS		
	2	Accuracy	± 0.060 % of calibrated range (minimum) for calibrated range greater than 400 mmwc. +0.065% of calibrated range (minimum) for calibrated range greater than 250 kg/cm2. ± 0.10 % of calibrated range (minimum) for calibrated range less than 400 mmwc.
	3.	Stability	0.25 % of calibrated range for 10 years for calibrated range greater than equal to 400 mmwc on standard conditions of manufacturer. 0.2 % of calibrated range for 1 years for calibrated range less than 400 mmwc on standard conditions of manufacturer. 0.15% of calibrated range for 5 years for DPT with static pressure greater than 250 kg/cm2.
	4	Turn down	50:1 for greater than or equal to span of 400mmwcl. 20:1 for span below 400mmwcl. 10:1 for span greater than 250 kg/cm2
	(Above mentioned (2,3,4) parameters/features of offered models shall be strictly as defined in standard published catalogue of the manufacturer only).		
	5	Housing	Weather proof as per IP-67, metallic housing with durable corrosion resistant coating
	6.	Electrical connection	½" NPT(F) FOUNDATION Fieldbus/PROFIBUS PA compatible
	7.	Process connection	½" NPT (F)
	8.	Operating Ambient temperature	85 deg C without display. 70 deg C with display.
		Overpressure	150% of max operating pressure
	9	Accessories	-Diaphragm seal, pulsation dampeners, syphon etc. as required by service and operating condition. -2 valve manifold for absolute & gauge pressure transmitters, -3-valve for DP and 5 valve manifold for level/flow applications. -The valve manifold shall be non-integral type. -For hazardous area, enclosure as described in NEC article 5.

CLAUSE NO.	TECHNICAL REQUIREMENTS

10.	Mounting	2 inch pipe mounting with Enclosure/Rack/Canopy.
11.	Diagnostics & display	Self-Indicating feature and digital display on transmitter

Notes

- For primary air/ secondary air/flue gas/ furnace pressure applications, DP type transmitters shall be provided for pressure measurement below 2000 mmwc.
- LVDT type is not acceptable.
- Where the process fluids are corrosive, viscous, solid bearing or slurry type, diaphragm seals shall be provided. Parts below the diaphragm shall be removable for cleaning. The entire volume above the diaphragm shall be completely filled with an inert liquid suitable for the application.

16.02.00 Temperature Transmitter

16.02.01 Single Input /Dual Input Temperature transmitter

Temperature transmitter shall be provided which shall be fully compatible with thermocouples and RTDs being provided by the contractor. Temperature compensation for thermocouples shall be performed in the temperature transmitter itself. Transmitters shall be capable of withstanding ambient temperature up to 85 deg C.

Following specifications are applicable for dual input/single input temperature transmitter.

S No.	Features	Essential/Minimum Requirements
1.	Output	FOUNDATION fieldbus /PROFIBUS PA
2.	Input	Same transmitter shall be capable to handle Pt-100 RTD, Thermocouples –K, R & ,S types
3.	Housing	Weather proof as per IP-67, metallic housing with durable corrosion resistant coating
4.	Electrical connection	½" NPT(F) FOUNDATION Fieldbus/PROFIBUS PA compatible
5.	Diagnostics & display	Self-Indicating feature and digital display on transmitter
6.	Operating Ambient temperature	85 deg C without display. 70 deg C with display.

CLAUSE NO.	TECHNICAL REQUIREMENTS
1.00.00	**GENERAL:**
1.01.00	Actuators shall be designed for valve operation to ensure proper function in accordance with specifications given below and complying to EN15714-2 or equivalent. All standards, specifications and codes of practice referred to herein shall be the latest editions including all applicable official amendments and revisions.
1.02.00	This sub-section of specification is applicable for following types of electric actuators:
1.02.01	**Modulating duty electric actuators:** These shall be provided as per standard practice of OEM of equipment, meeting other requirements of specifications.
1.02.02	**Electric actuators for valves/ dampers/ gates (other than covered in 1.02.01):** These actuators shall be Non-Intrusive type electric actuators. The interface of these actuators with DDCMIS shall be of two types viz. with Hardwired interface and with Fieldbus interface. The common requirements of both these type of actuators are specified at clause 2.00.00, specific requirements of Non-Intrusive hardwired actuators are specified at clause 3.00.00 and specific requirements of Non-Intrusive fieldbus actuators are specified at clause 4.00.00. The applications where these two types of actuators are to be provided is specified in Part-A of Technical Specifications.
2.00.00	**COMMON REQUIREMENTS FOR NON INTRUSIVE ELECTRIC ACTUATORS**
2.01.00	**TYPE:**
2.01.01	The actuators shall have integral starters with built in SPP (Single Phasing Preventer). 415 V, 3 phase 3 wire power supply shall be given to the actuator from switch board as applicable through a switch fuse unit. Control voltage of the motor starter shall be 110 V AC / 24 V DC, derived suitably from 415V power supply.
2.01.02	The actuators shall be Non- Intrusive electric actuator. All actuator settings including torque, limit shall be possible without opening the actuator cover and LCD indication shall be available integral to actuator body.
2.02.00	**RATING:** (a) Supply Voltage & frequency: 415V +/- 10%, 3 Phase, 3 Wire & 50HZ +/-5%. (b) Sizing: Open/Close at rated speed against designed differential pressure at 90% of rated voltage. For ON/OFF type: Three successive open-close operations or 15 minutes, whichever is higher. For inching type: 150 starts per hour or required cycles, whichever is higher.
2.03.00	**CONSTRUCTION:** (a) Enclosure: Totally enclosed weatherproof, minimum IP-68 degree of protection. (b) Manual Wheel: Shall disengage automatically during motor operation.

CLAUSE NO.	TECHNICAL REQUIREMENTS
2.04.00	**MOTOR:** (a) Type : Squirrel cage induction motor suitable for Direct On Line (DOL)starting. (b) Enclosure: Totally enclosed, self-ventilated. (c) Insulation Class F. Temperature rise 70 Deg C. over 50 Deg C ambient. (d) Bearings: Double shielded, grease lubricated antifriction. (e) Earth Terminals: Two (f) Protection: Single Phasing Protection, Over heating protection through Thermostat (as applicable) and wrong phase sequence protection shall be provided over and above other protection features standard to bidder's design. Suitable means shall be provided to diagnose the type of fault locally.
2.05.00	**POSITION/TORQUE TRANSMITTER:** The Position/ Limit measurement shall be done using absolute encoders which will give information of position/ limit in both the directions. Electronic measurement of torque shall be provided.
2.06.00	**LOCAL OPERATION:** It shall be possible to operate the actuator locally also. Lockable local/remote selection shall be provided on the actuator.
2.07.00	**LCD DISPLAY:** A local LCD display shall be provided to give information regarding actuator alarms, status and valve position indications as a minimum in local.
2.08.00	**WIRING:** Suitable voltage grade copper wire.
2.09.00	**TERMINAL BLOCK:** For power cables, the grade of TBs shall be minimum 650V.
2.10.00	**ACCESSORIES:** All required accessories (if applicable) for calibration / settings/ configuration of various parameters of actuator shall be provided. For quantities, please refer Part A of technical specifications.

2.11.00 **SIL CERTIFICATION:**
All actuators shall be certified for SIL 2 or better.

3.00.00 **SPECIFIC REQUREMENTS FOR NON INTRUSIVE HARDWIRED ACTUATORS**

3.01.00 **INTERFACES:**

For ON-OFF and INCHING type actuators interface with the control system shall be through hardwired signal only.

(a) Open/Close command, open/ close status and disturbance monitoring signal (common contact for Overload, Thermostat, control supply failure, L/R selector switch at local & other protections operated) shall be provided hardwired.

(b) The actuator shall be able to accept open/close command at 24V DC with max. 2.5VA load from control system. Accordingly suitable isolated interface in the actuator shall be provided.

(c) Open/close command termination logic shall be suitably built inside actuator.

(d) For typical wiring diagram Refer Tender Drawing No. 0000-999-POI-A-063 (Except plug & socket connector, if not applicable)

3.02.00 **TERMINAL BOX:**

Suitable terminals/ connectors, integral to actuator, for terminating instrumentation & power cables shall be provided. Necessary glands for power cables and instrumentation cables shall be provided.

4.00.00 **SPECIFIC REQUIREMENTS FOR NON INTRUSIVE FIELDBUS ACTUATORS**

4.01.00 **INTERFACES:**

For ON-OFF and INCHING type actuators interface with the control system shall be through fieldbus network.

(a) Open/ close commands, open/ close feedback status, disturbance signal etc. shall be available to the Control System through the fieldbus network along with diagnostics. The detailed diagnostics including the actuator operating data shall be available to the DDCMIS through the fieldbus network.

(b) All actuators shall be Foundation Fieldbus/ Profibus compatible. However the exact protocol shall be based on finalized protocol of DDCMIS. If Profibus DP protocol is envisaged then actuator shall have two (redundant) Profibus DP ports for connecting the redundant Profibus DP cables. That is if one profibus cable is cut or not working/ not available, then complete actuator functionality shall be available through the second redundant cable without any manual intervention.

(c) Open/close command termination logic shall be suitably built inside actuator.

4.02.00 **TERMINAL BOX:**

Suitable terminals/ connectors, integral to actuator, for terminating fieldbus cables and power cables shall be provided. Necessary glands for power cables and armored fieldbus cables shall be provided.

4.03.00 **TRAINING:**

Contractor shall provide training on Non-Intrusive Fieldbus Electric Actuator along with detail training on Foundation Fieldbus/ Profibus interface used in actuator for Employer's personnel. The duration of the training shall be as elaborated in Part-C, Section-VI of technical specifications.

5.00.00 **SPECIFIC REQUIREMENTS FOR BLADE PITCH ACTUATORS**

Sl No.	Description	Requirement
1.	Duty	Continuous duty / Modulation,
2.	Operating Ambient Temperature	-20 to +60 Deg C or better
3.	Enclosure Protection	IP 68
4.	Resolution/ Precision	0.1%- 0.2% or better of total travel
5.	Supply Voltage & frequency	415V +/- 10%, 3 Phase, 50HZ +/-5% or 230V +/- 10%, Single Phase, 50Hz +/- 5%
6.	Motor Suitable for	Continuous Duty
7.	Motor insulation Class	F
8.	Analog Control	4-20mA, (24VDC)
9.	Position Transmitter	4-20mA (24VDC)
10.	Integral Starter	Yes
11.	Terminal Block	For power cables, the grade of TBs shall be minimum 600V
12.	Accessories (if applicable)	for calibration / settings/ configuration of various parameters of actuator shall be provided
13.	Hand wheel	Yes
14.	Standard Compliance	EN 15714-2 Class D or equivalent

SUB-SECTION – ID

DATASHEET-A

	DATA SHEET - A				SPECIFICATION NO.: PE-TS-RC3-165-N004
	SELF CLEANING STRAINER (SCS)				REV. NO.: 00. DATE : 27/05/2019
					SECTION : I. SUB-SECTION : ID
SL NO	**DESCRIPTION**	**UNITS**	**TYPE - I**	**TYPE - II**	**TYPE - III**
1.00	**GENERAL**				
1.1	No. of Strainers/ Filters required for station	Nos.	Total 4 Sets - i.e.(2 Working + 2 Standby)	Total 2 Sets - i.e.(1 Working + 1 Standby)	Total 2 Sets - i.e.(1 Working + 1 Standby)
1.2	Liquid Handled		Clarified Water	Clarified Water	Clarified Water
1.3	Size of SCS Shell	NB	200	250	300
1.4	Length of SCS Shell	mm	As per Bidder standard	As per Bidder standard	As per Bidder standard
1.5	Connecting pipe size (OD x Thk)	mm x mm	219.1 X 6.0	273.0 X 6.0	323.9 X 6.0
1.6	Scope of Counter Flange of SCS Shell		In bidder's scope	In bidder's scope	In bidder's scope
1.7	BOQ for Debris Discharge Piping (For Clarified water).		1. Dia of pipe: To be decided by bidder. 2. Length of pipe: 50 m pipe length. 3. No. of bends: 5 Nos.	1. Dia of pipe: To be decided by bidder. 2. Length of pipe: 50 m pipe length. 3. No. of bends: 5 Nos.	1. Dia of pipe: To be decided by bidder. 2. Length of pipe: 50 m pipe length. 3. No. of bends: 5 Nos.
1.8	Filter type/ duty		On line / continuous	On line / continuous	On line / continuous
1.9	Location		ACW Pump Discharge Header (Outdoor)	ACW Pump Discharge Header (Outdoor)	ACW Pump Discharge Header (Outdoor)
2	**DESIGN DATA**				
2.1	Operating pressure at SCS Inlet Flange	kg/cm2 (g)	2.0 - 3.0	5.5 - 6.5	3.5 - 5.5
2.2	Design pressure for SCS Shell	kg/cm2 (g)	10	10	10
2.3	Design Mechanical temperature	Deg. C	60	60	60
2.4	Flow rate through filter				
	a) Normal	Cub m/Hr	280	450	600
	b) Maximum	Cub m/Hr	364	585	780
2.5	Design differential pressure for filter section/ screen	kg/cm2 (g)	1.5 (Min.)	1.5 (Min.)	1.5 (Min.)
2.6	Type of suspended matter likely to enter the filter		Typical debris encountered in closed circuit ACW system with Cooling Tower	Typical debris encountered in closed circuit ACW system	Typical debris encountered in closed circuit ACW system
2.7	Differential pressure measuring system set pressure				
	· For initiating flushing/ backwashing	mbar	110	110	110
	· For alarm/ annunciation	mbar	160	160	160
2.8	Filter section/ screen perforation size	mm	2 mm (max)	2 mm (max)	2 mm (max)
2.9	Free flow area in the screen basket		Atleast 120 % of pipe inlet area	Atleast 120 % of pipe inlet area	Atleast 120 % of pipe inlet area
2.1	Debris discharge flow during flushing period	Cub m/ Hr.	Not to exceed 3% of total flow rate	Not to exceed 3% of total flow rate	Not to exceed 3% of total flow rate
3	**GUARANTEED PERFORMANCE REQUIREMENT**				
3.1	Pressure drop across the filter (i.e. between inlet and outlet connection) at normal flow				
	a) Clean condition	MWC	1 MWC	1 MWC	1 MWC
	b) Partially (50%) chocked condition	MWC	1.6 MWC	1.6 MWC	1.6 MWC
4	**MATERIALS OF CONSTRUCTION**				
4.1	Filter body/ housing including Body Flange		Carbon Steel to IS -2062 Gr. E-250B. with epoxy painted inside (with minimum housing thickness same as connecting pipe thickness)	Carbon Steel to IS -2062 Gr. E-250B. with epoxy painted inside (with minimum housing thickness same as connecting pipe thickness)	Carbon Steel to IS -2062 Gr. E-250B. with epoxy painted inside (with minimum housing thickness same as connecting pipe thickness)
4.2	Connecting pipe (Inlet/ Outlet)		CS to IS 2062 Gr. E-250B, rolled & butt welded, conforming to IS 3589	CS to IS 2062 Gr. E-250B, rolled & butt welded, conforming to IS 3589	CS to IS 2062 Gr. E-250B, rolled & butt welded, conforming to IS 3589
4.3	Filter screen/ section		SS 316	SS 316	SS 316
4.4	Shaft		SS 316	SS 316	SS 316
4.5	Supporting cage		SS 316	SS 316	SS 316
4.6	Differential measuring system		SS 316	SS 316	SS 316
4.7	Flushing/ backwashing unit		SS 316	SS 316	SS 316
4.8	Backwash rotor shoes		Neoprene	Neoprene	Neoprene
4.9	Any other internal hardware /pipes etc.		SS 316	SS 316	SS 316
4.1	Flushing Pump (If applicable)				
	a) Casing		CI to IS 210 FG 260	CI to IS 210 FG 260	CI to IS 210 FG 260
	b) Impeller		SS-316	SS-316	SS-316

SL NO	DESCRIPTION	UNITS	TYPE - I	TYPE - II	TYPE - III
	c) Shaft		SS-316	SS-316	SS-316
4.11	Valves				
4.11.1	Check Valves (65 NB & Above)		For sizes 65 NB and above-Swing check type or dual plate type. End connection shall be flanged type.	For sizes 65 NB and above-Swing check type or dual plate type. End connection shall be flanged type.	For sizes 65 NB and above-Swing check type or dual plate type. End connection shall be flanged type.
	a) Body & Bonnet		Carbon Steel as per ASTM-A216-Gr. WCB.	Carbon Steel as per ASTM-A216-Gr. WCB.	Carbon Steel as per ASTM-A216-Gr. WCB.
	b) Disc for Check Valve		SS-316	SS-316	SS-316
	c) Stem		ASTM A-182 Gr. F6a	ASTM A-182 Gr. F6a	ASTM A-182 Gr. F6a
4.11.2	Check Valves (50 NB & Below)		For size 50 NB and below-Piston type End connection shall be socket welded type.	For size 50 NB and below-Piston type End connection shall be socket welded type.	For size 50 NB and below-Piston type End connection shall be socket welded type.
	a) Body & Bonnet		Carbon steel as per ASTM A-105	Carbon steel as per ASTM A-105	Carbon steel as per ASTM A-105
	b) Disc for Check Valve		SS-316	SS-316	SS-316
	c) Stem		13% Cr Steel as per ASTM A-182 Gr. F6a.	13% Cr Steel as per ASTM A-182 Gr. F6a.	13% Cr Steel as per ASTM A-182 Gr. F6a.
4.11.3	Gate/ Globe Valves 50 Nb & Below		End connection shall be socket welded type.	End connection shall be socket welded type.	End connection shall be socket welded type.
	Body & Bonnet		Carbon steel as per ASTM A-105	Carbon steel as per ASTM A-105	Carbon steel as per ASTM A-105
4.11.4	Gate/Globe Valves (65NB & above)		End connection shall be flanged type.	End connection shall be flanged type.	End connection shall be flanged type.
	Ø Body & Bonnet		Carbon Steel as per ASTM-A216-Gr. WCB.	Carbon Steel as per ASTM-A216-Gr. WCB.	Carbon Steel as per ASTM-A216-Gr. WCB.
	Ø Disc		SS-316	SS-316	SS-316
	Ø Stem		ASTM A-182 Gr. F6a	ASTM A-182 Gr. F6a	ASTM A-182 Gr. F6a
4.11.5	BFV Valves (65NB & above)				
	Ø Body & Disc		2 % Ni CI to IS-210 GR FG-260	2 % Ni CI to IS-210 GR FG-260	2 % Ni CI to IS-210 GR FG-260
	Ø Sealing, Retaining segment & internals		SS-304	SS-304	SS-304
	Ø Bearing		Self lubricating type	Self lubricating type	Self lubricating type
	Ø Companinon Flange		-		-
4.11.6	Ball valves				
	i) Body		SA 351 CF8M	SA 351 CF8M	SA 351 CF8M
	ii) Ball		SA 351 CF8M	SA 351 CF8M	SA 351 CF8M
	iii) Stem		SS 318	SS 318	SS 318
4.12	Debris discharge/ Interconnecting Piping material				
	MATERIAL		a) Up to 150 NB - Carbon steel ERW, IS:1239 (Heavy Grade). b) 200 NB and above - CS to IS 2062 Gr. E-250B, rolled & butt welded, conforming to IS 3589	a) Up to 150 NB - Carbon steel ERW, IS:1239 (Heavy Grade). b) 200 NB and above - CS to IS 2062 Gr. E-250B, rolled & butt welded, conforming to IS 3589	a) Up to 150 NB - Carbon steel ERW, IS:1239 (Heavy Grade). b) 200 NB and above - CS to IS 2062 Gr. E-250B, rolled & butt welded, conforming to IS 3589
4.13	Inspection hole		Required	Required	Required
5	**COUNTER FLANGES FOR SCS SHELL**		In Bidder's Scope	In Bidder's Scope	In Bidder's Scope
5.1	MATERIAL				
	a) Flanges		IS 2062, Gr. E-250B, epoxy painted	IS 2062, Gr. E-250B, epoxy painted	IS 2062, Gr. E-250B, epoxy painted
	b) Fasteners		A 193 & A 194	A 193 & A 194	A 193 & A 194
	c) Gaskets		Min 4 mm thick rubber	Min 4 mm thick rubber	Min 4 mm thick rubber
5.2	Drilling Standard		ANSI B 16.5 / AWWA C 207 / BS EN 1092 or equivalent	ANSI B 16.5 / AWWA C 207 / BS EN 1092 or equivalent	ANSI B 16.5 / AWWA C 207 / BS EN 1092 or equivalent
6	**OTHER COUNTER FLANGES**		In Bidder's Scope	In Bidder's Scope	In Bidder's Scope
6.1	MATERIAL				
	a) Flanges		IS 2062, Gr. E-250B, epoxy painted	IS 2062, Gr. E-250B, epoxy painted	IS 2062, Gr. E-250B, epoxy painted
	b) Fasteners		A 193 & A 194	A 193 & A 194	A 193 & A 194
	c) Gaskets		Min 4 mm thick rubber	Min 4 mm thick rubber	Min 4 mm thick rubber

SL NO	DESCRIPTION	UNITS	TYPE - I	TYPE - II	TYPE - III
7	**Material of Other components not specified above**		Suitable for intended duty & water quality	Suitable for intended duty & water quality	Suitable for intended duty & water quality
8	**PAINTING**				
8.1	External Surface				
	a) Surface preparation		SA 2.5 of Swedish Specification SIS 05.5900.197	SA 2.5 of Swedish Specification SIS 05.5900.197	SA 2.5 of Swedish Specification SIS 05.5900.197
	b) Primer		Two coats of epoxy polymide resin based red oxide-zinc phosphate (primer) of minimum thickness of 30 microns/coat followed up with one coat of epoxy resin based paint with MIO/coal tar based epoxy paint of minimum thickness of 80 microns shall be applied.	Two coats of epoxy polymide resin based red oxide-zinc phosphate (primer) of minimum thickness of 30 microns/coat followed up with one coat of epoxy resin based paint with MIO/coal tar based epoxy paint of minimum thickness of 80 microns shall be applied.	Two coats of epoxy polymide resin based red oxide-zinc phosphate (primer) of minimum thickness of 30 microns/coat followed up with one coat of epoxy resin based paint with MIO/coal tar based epoxy paint of minimum thickness of 80 microns shall be applied.
	c) Intermediate				
	c) Final paint		The top coat shall consist of two coats of epoxy polyamide enamel suitably pigmented of minimum thickness of 30 microns/coat. Thus total thickness shall be minimum 200 microns.	The top coat shall consist of two coats of epoxy polyamide enamel suitably pigmented of minimum thickness of 30 microns/coat. Thus total thickness shall be minimum 200 microns.	The top coat shall consist of two coats of epoxy polyamide enamel suitably pigmented of minimum thickness of 30 microns/coat. Thus total thickness shall be minimum 200 microns.
8.2	Internal Surface				
	a) Surface preparation		SA 2.5 of Swedish Specification SIS 05.5900.197	SA 2.5 of Swedish Specification SIS 05.5900.197	SA 2.5 of Swedish Specification SIS 05.5900.197
	b) Primer		One coat of epoxy resin based primer	One coat of epoxy resin based primer	One coat of epoxy resin based primer
	c) Final paint		Applicable no. Of coats of coal tar epoxy paint to achieve total DFT of 200 to 250 microns	Applicable no. Of coats of coal tar epoxy paint to achieve total DFT of 200 to 250 microns	Applicable no. Of coats of coal tar epoxy paint to achieve total DFT of 200 to 250 microns
9	**SHOP TEST**				
9.1	Hydrostatic test				
	a) Test Pressure	bar (g)	1.5 times design pressure	1.5 times design pressure	1.5 times design pressure
	b) Test duration	min.	30	30	30
9.2	Leakage test				
	a) Test Pressure	bar (g)	Design Pressure	Design Pressure	Design Pressure
	b) Test duration	min.	30	30	30
10	**Adequate provision for future installation of cathodic protection required**		YES	YES	YES
11	**Whether automatic flushing/ back- washing operation effected by the following :**				
	i. Differential pressure		YES	YES	YES
	ii. Adjustable timer		YES	YES	YES
	iii. Push button		YES	YES	YES
12	**Whether provision for manual flushing / backwashing operation is made in the event of control system failure.**		YES (if required)	YES (if required)	YES (if required)
13	**Whether built in flushing arrangement complete with flushing pump, valves, and associated piping, is provided.**		YES (if required)	YES (if required)	YES (if required)
14	**MANDATORY SPARES**		Refer Annexure - I (Quantity shall be 2 times of all Items of Annexure - I)	Refer Annexure - II (Quantity shall be 2 times of all Items of Annexure - II)	

ANNEXURE - I

C&I MANDATORY SPARES

1	**MEASURING INSTRUMENTS**	
	(i) Transmitters of all types and model no. (for measurement of pressure, differential pressure, flow, level, temp, etc.). This shall include magnetic/ electromagnetic flow meter, mass flow meter also.	10% or 1 no. of each type and model, whichever is more.
	Local Gauges for Pressure, Differential pressure, flow, level, temp	5% or 1 no. of each type, model and range, whichever is more.

3	**PROCESS CONNECTION PIPING (For Impulse Piping / Tubing and Air Supply Piping as Applicable)**	
	1. Valves of all types and models	10% or 1 no. of each type, class, size and model whichever is more.
	2. 2 way, 3way, 5way valve manifolds	10% or 1 no. of each type, class, size and model whichever is more.
	3. Fittings	10% or 1 packet of each type, class, size and model whichever is more.
	4. Purge meters	5% of each model or 1 no. whichever is more.
	5. Filter regulators	20% of each model or 2 nos. whichever is more.
4	**ELECTRICAL ACTUATORS**	
	Actuators	1 no of each type and rating
	Electronic PCB of all types	10% of each type & model
	Absolute Encoder (replaceable part)	5% of each type & model
	Electronic Torque sensor	5% of each type & model

E.	**CONTROL PANEL** /STARTER PANEL		
	1	Control supply transformers	2 no. of each type & rating
	2	Ammeters	4 nos. of each type & rating
	3	Voltmeters	2 no. of each type & rating
	4	LEDs	5 nos. of each type & rating
	5	Control switches	2 nos. of each type
	6	Selector switches	2 nos. of each type
	7	Push button (complete with contact elements)	2 nos. of each type & colour
	8	Auxiliary contactors	2 complete sets
	9	Control fuse base with carrier complete set for panel	1 complete sets
	10	Bi-metallic overload relays	2 complete sets of the

NOTE: Bidder shall supply mandatory spares applicable as per the offered system.

ANNEXURE - II

SI. NO.	PARTICULARS	QUANTITY
1	**MEASURING INSTRUMENTS**	
	All types of local indicators	1 no. of each make, model and type
	Process Actuated Switch Devices : (All types of Pressure, diff. pressure, flow, temperature, level switch devices).	1 no. of each type and model
	All type of Electronic Transmitters and Ultrasonic Transmitters including sensors.	10% or 1 no. of each type and model whichever is more.
	Limit switches for isolation valves	1 no. of each type
2	**PROCESS CONNECTION PIPING (For Impulse Piping / Tubing and Air Supply Piping as Applicable)**	
	Valves	1 no. of each type, class, size and model.
	2 way, 3 way, 5 way valve manifolds	1 no. of each type, class, size and model.
	Fittings	5% or 1 no. of each type, class, size and model whichever is more.
3	**ELECTRICAL ACTUATORS**	
	Actuators	1 no of each type and rating
	Electronic PCB of all types	10% of each type & model
	Absolute Encoder (replaceable part)	5% of each type & model
	Electronic Torque sensor	5% of each type & model

Table-4
DESIGN CLARIFIED WATER ANALYSIS

S.No	Constituent	As	mg/l (except pH & turbidity)
1.	Calcium	$CaCO_3$	200.5
2.	Magnesium	$CaCO_3$	92
3.	Sodium + Potassium	$CaCO_3$	96
4.	Total Cations	$CaCO_3$	388.50
5.	Chloride	$CaCO_3$	106
6.	Sulphate	$CaCO_3$	58.5
7.	Alkalinity	$CaCO_3$	224
8.	Total Anions	$CaCO_3$	388.50
9.	Iron(total)	Fe	0.3
10.	Silica	SiO_2	10
11.	pH value	---	7.0-8.5
12.	Turbidity	NTU	10

Note: Clarified water is used for CW system as make up & the CW system is expected to operate at about 5.0 – 5.5 Cycles of Concentration (COC) with suitable chemical treatment program using acid, scale & corrosion inhibitor dozing. As CW blow down water is tapped from CW system, the water quality of CW blow down shall accordingly be arrived by the bidder.

Table-5
ANALYSIS OF DM WATER

ANALYSIS OF DM WATER TO BE USED FOR MAKE-UP WATER TO CONDENSER

S.No.	Characteristics		Value
i)	Silica (Max.)	-	0.02 ppm as SiO2
ii)	Iron as Fe	-	Nil
iii)	Total hardness	-	Nil
iv)	pH value	-	6.8 to 7.2
v)	Conductivity	-	Not more than 0.1 excluding the effects of free CO_2

SUB-SECTION - IIA

STANDARD TECHNICAL SPECIFICATION (MECHANICAL)

STANDARD TECHNICAL SPECIFICATION FOR SELF CLEAING STRAINER

STANDARD QUALITY PLAN

1.00.00 **GENERAL**

This specification covers the Design, Performance and Operational Requirements, Constructional Features, Manufacture, Assembly. Inspection and Testing at the Manufacturer's and/or his Sub-contractor's works and Painting for delivery of Self-Cleaning Strainer (Backwash Type) complete with all accessories as specified hereinafter.

2.00.00 **CODES AND STANDARDS**

2.01.00 The design, materials manufacture, inspection and testing of the Self Cleaning Strainer complete with all accessories, shall comply with the requirements of the latest revisions of the following appropriate codes and standards :

2.01.01 IS/ BS/ DIN/ US Standards regarding pressure vessels, pipes, flanges and others as necessary.

2.01.02 IS/ BS/ DIN/ ASTM Standards for materials specification and testing procedures.

2.01.03 IS/ BS/ DIN/ AWWA Standards for valves and their testing.

2.02.00 In case of any conflict between the above codes/ standards and this specification, the later shall prevail and in case of any further conflict in the matter, the interpretation of the specification by the Engineer shall be final and binding.

3.00.00 **DESIGN AND CONSTRUCTION**

3.01.00 **General Requirements**

3.01.01 Unless otherwise necessary manufacturer's standard and proven models of the Self Cleaning Strainer shall be supplied.

3.01.02 The Self Cleaning Strainer shall be capable of safe, proper and continuous operation. Vibration, noise, mechanical stresses shall be kept within allowable limits specified by relevant codes / standards, in design due attention shall be given to ease of maintenance, repair and cleaning.

3.01.03 Suitable corrosion allowance shall be provided wherever necessary. Adequate provision for future installation of cathodic protection shall be provided.

3.01.04 The Self Cleaning Strainer shall be designed to suit installation in on-line or off-line arrangement as specified in Data Sheet-A.

In the on-line arrangement, the inlet and outlet pipes of the Self Cleaning Strainer shall be in line with each other on the same axis without any off-set between the centre lines of inlet and outlet pipes.
In the off-line arrangement, the Self Cleaning Strainer inlet and outlet pipes shall be at right angle (90°) to each other.

3.02.00 **Performance Requirements**

The Self Cleaning Strainer with all accessories shall be designed and guaranteed to meet the following requirements:-

3.02.01 The Self Cleaning Strainer shall perform satisfactorily under the flow and pressure conditions specified in Data Sheet -A and shall be capable of housing the various forms of debris / sludge i.e., suspended particles / matter, mussels, grass, leaves, wood pieces etc. The performance of the Self Cleaning strainer shall be continuous with minimum number of flushing/ backwashing operations.

3.02.02 The Self Cleaning Strainer shall be designed such that the pressure drop across the Self Cleaning Strainer (i.e., between inlet and outlet connections) under clean conditions and partially (50%) chocked conditions shall not be more than those specified in Data Sheet -A.

3.02.03 Unless otherwise specified in Data Sheet -A, debris discharge / wash water flow rate during flushing/back washing operation shall be limited to 10% of the total flow rate and flushing / backwashing operation shall be completed within a period of maximum three (3) minutes. The pressure drop across the Self Cleaning strainer during flushing/ backwashing operation shall not be more than the pressure drop under partially (50%) chocked condition.

3.02.04 The coarse particles and floating matter accumulating at the filter section/screen are flushed out of the system by the system by the debris flushing / backwash unit such that the pressure drop across the filter after flushing / backwashing, shall not be more than 1.1 times the pressure drop under clean conditions.

3.03.00 **Operational Requirement**

The Self Cleaning Strainer and other accessories shall be designed for the following flushing/backwashing operation modes:

3.03.01 Complete automatic flushing/backwashing operation effected by the following:-

- differential pressure measuring system at a pre-determined differential pressure across the filter screen.
- adjustable timer (0-24 hours)
- push button (for manual initiation of sequential flushing / backwashing)

3.03.02 Manual operation in the event of failure of control system.

3.04.00 **Filter Housing/ Body**

3.04.01 The Self Cleaning Strainer housing/body shall be designed and manufactured as per the applicable codes for pressure vessels. It shall house the filter section / screen assembly and shall have flanged inlet, outlet, flushing/ debris discharge openings and pressure measuring tappings etc.

3.04.02 In design of SCS housing/ body due attention shall be given for easy removal and replacement of filter section / screen assembly.

3.04.03 The Self Cleaning Strainer shall be provided with inspection hole with bolted cover.

3.04.04 The SCS body / housing shall be provided with vent and drain connections with isolating valves. It shall be possible to drain unfiltered and filtered water.

3.04.05 If specified in Data Sheet-A, filter body/housing shall be epoxy painted.

3.05.00 **Filter Section / Screen assembly.**

3.05.01 The Self Cleaning Strainer section/screen shall be designed for the maximum differential pressure across the filter and shall be securely positioned by a supporting cage and shall be securely mounted in the housing or body.

3.05.02 The perforation/mesh size of the strainer section shall not be more than that specified in Data Sheet-A.

3.05.03 The arrangement of the Strainer section shall be such that the forced accumulation of debris on the filter screen / section shall be minimum.

3.06.00 **Differential Pressure Measuring System**

3.06.01 The Self Cleaning Strainer shall be provided with a measuring system for differential pressure across the filter section/screen, to check debris accumulation and to initiate flushing/ backwashing operation. This shall consist of a differential pressure transmitter for automatic flushing operation, a differential pressure gauge for manual observation with adequate number of taping with isolating valves and equalising valves.

3.06.02 The contacts for differential pressure transmitter and for differential pressure gauge shall be independent so that in the event of failure of one, the other is available.

3.06.03 The differential pressure measuring system shall be provided with D.P. transmitter & DPG of remote seal arrangement..

3.07.00 **Flushing / Backwash Unit. :**

3.07.01 The Self Cleaning Strainer shall be provided with suitable flushing/backwash unit (to be installed at ground floor) and debris discharge/ backwash outlet valve with associated actuator to flush out the accumulated debris/ sludge.

3.07.02 The flushing pump shall be provided with mechanical seals to the extent possible. If gland packing is provided it should be of good quality to prevent leakage of water bran pump glands.

3.07.03 The flushing arrangement shall be either fixed type with flushing valves or a rotating debris extractor.

3.07.04 If any water is to be injected for backwashing the filter section/screen, water shall be taken from down-stream side of the filter section/ screen. Necessary pump, valves and piping for water injection shall be supplied.

3.07.05 View glass to be provided in debris outlet pipe to monitor the flushing of debris.

3.08.00 **Valves**

The flushing valves (if any,) the debris discharge/backwash outlet valve, isolation, vent and drain valves shall conform to appropriate codes / standards.

3.09.00 **Instrumentation and Control System**

3.09.01 Complete instrumentation and control system for automatic flushing/ backwashing operation, protection, interlocking, indication/ annunciation of high differential pressure and other malfunctions etc. shall be provided. This shall consist of adequate operational hardware, local control panel and interconnecting control and power cabling between the control panel and the Self Cleaning strainer and its associated electrical devices.

3.09.02 The control panel shall house all necessary instruments, indicating/ annunciation lamps, alarms, differential pressure indicator, timer, function selector switches, relays, protection and interlocking systems, start/stop push buttons, counter to register number of flushing operations etc., and shall be complete with internal wiring. In addition to the above, the control panel shall meet the requirements of the enclosed specification.

3.09.03 All instrumentation shall be of reputed make and shall meet the requirement of the enclosed specification.

3.10.00 **Actuators :**

The actuators for flushing arrangement and debris discharge valve shall be electric motor operated and shall meet the requirements of the enclosed specification. The actuators shall be provided with auxiliary hand-wheel for manual operation in the event of power failure.

3.11.00 **Electric Motors :**

The drive motors for differential pressure measuring system flushing pump and water injected pump (if applicable) shall confirm to the requirements of the enclosed specification.

3..12.00 **Other Accessories.**

3.12.01 Counter flanges, complete with gaskets, bolts and nuts etc., shall be supplied for the filter inlet, outlet connections and all other terminal points. Fabrication, dimensions and drilling of the flanges shall conform to the codes/standards specified in Data Sheet-A/ Section -C.

3.12.02 Self Cleaning Filter shall be provided with suitable lifting arrangement for handling during erection and maintenance.

4.00.00 **SHOP INSPECTION AND TESTS**

4.01.00 **General:**

4.01.01 Manufacturer shall conduct all tests and stage inspections as per the approved quality plan to ensure that the Self Cleaning strainer and other accessories shall conform to the requirements of this specification and of the applicable codes/ standards.

4.01.02 All materials used for manufacture/fabrication of the Self Cleaning Strainer shall be of tested quality. Relevant test certificates for chemical analysis, mechanical tests and heat treatment shall be made available before the final shop inspection. In case the relevant test certificates are not available, the manufacturer shall arrange to carry out the necessary tests as per approved quality plan and applicable codes at his cost, for which samples shall be identified by BHEL's representative.

4.01.03 All shop tests shall be conducted in the presence of BHEL's representative and test certificates / reports for the same shall be furnished to BHEL for approval.

4.01.04 Qualification of welding procedures and welders shall be as per ASME B&PV Code, Section-IX / applicable codes.

4.02.00 **Filter Housing / Body**

4.02.01 Chemical analysis, mechanical tests shall be carried out on housing/body, strainer/ screen, strainer/ screen shaft and other appurtenances as per the applicable material specification standards.

4.02.02 All butt welded joints shall be subjected to radiographic / ultrasonic testing as per applicable codes. However all welded joints shall be subjected to 100% magnetic particle / penetrant testing to ensure freedom from defects.

4.03.00 **Rubber Lining (as applicable)**

Rubber lining shall be subjected to surface crack test, 100% spark and hardness tests and shall be checked for layer thickness, defects etc.

4.04.00 **Filter Section/Screen assembly**

Supporting cage and filter section/screen materials shall be tested for chemical properties. Checks shall be carried out for perforation/mesh size, defects etc.

4.05.00 **Flushing / Backwash Unit**

4.05.01 Material of various components of the flushing/Backwash Unit shall be tested for chemical and mechanical properties.

4.05.02 Hollow shaft of backwash rotor shall be ultrasonically tested as per ASTM-A 388 for internal flaws. Penetrant test shall be carried out for surface flaws.

4.06.00 **Valves**

Inspection and testing of valves including leakage test shall be carried out as per the requirements of the applicable standards. Correlating test certificates for materials of the valve components shall be furnished.

4.07.00 **Flanges**

4.07.01 In case of fabricated flanges, all the welds shall be subjected to 100% radiography as per ASME B&PV code, section VIII, Division-1.

4.07.02 In case of forged flanges, ultrasonic testing shall be carried out as per ASTM-A 388.

4.07.03 If the thickness of the plate used for flanged is 40mm or more the same shall be checked ultrasonically as per ASTM-A435 to demonstrate the absence of lamination and lack of fusion etc.

4.07.04 Chemical and mechanical test certificates shall be furnished for flange materials.

4.07.05 Flanges shall be checked for edge preparation, fit up and satisfactory working with matching parts.

4.08.00 All materials for various nozzles, seals, pipes, gaskets, nuts bolts etc., shall be of tested quality and correlating test certificates for chemical and mechanical properties shall be furnished.

4.09.00 **Dimensional Checks**

Dimensional checks of various components of the Self Cleaning Strainer shall be carried out as per the drawings approved by BHEL. Alignment and fit up of movable parts shall be checked.

4.10.00 **Hydrostatic Test**

Hydrostatic test shall be conducted on the Self Cleaning Strainer housing/body at a pressure of 1.5 times the design pressure. The duration of the test shall be minimum 30 minutes.

4.11.00 **Leakage Test**

Leakage test shall be conducted at the design pressure to demonstrate that the filter assembly is leak tight and no water seepage shall take place at various nozzle and valve connections.

4.12.00 **Functional Tests**

The Self Cleaning Strainer assembly complete with valves, actuators and other accessories shall be subjected to functional tests and the following shall be checked:-

4.12.01 Smooth and free operation of all movable parts.

4.12.02 Interlocks and sequential operation.

4.12.03 Satisfactory operation of actuator torque switches, limit switches etc.

4.13.0 Performance Test:

Performance Test shall be conducted to ensure that the Self Cleaning Strainer meets the specified performance requirements.

5.00.00 **TESTING AT SITE**

After completion of installation at site, the Self Cleaning Strainer with complete accessories, will be tested to check that the filter performance meets the requirements of its specification, Rectification of all defects shall have to be done by the supplier at no extra cost to the Owner / Purchaser. However the Owner / Purchaser reserves the right to reject the equipment/ parts not meeting the requirement if the deficiency still persists.

6.00.00 **QUALITY ASSURANCE & QUALITY PLAN**

6.01.00 The Self Cleaning Strainer and other accessories to be supplied shall have assured quality and workmanship.

6.02.00 Typical quality plans are enclosed herewith this specification for bidder's guidance. The bidder shall comply with these minimum requirements and shall furnishing own quality plan based on materials and components of the filter being offered.

7.00.00 **NAME PLATE AND TAG NUMBERS**

7.01.00 The Self Cleaning Strainer shall be provided with a permanently attached brass or stainless steel plate indicating the following details:-

a) Design and maximum flow rates
b) Design and test pressures
c) Design temperature
d) Filter section/screen mesh size
e) Empty and operating weights
f) Revolving speed of backwash rotor

7.02.00 Each valve shall be provided with a name plate indicating the following:-

a) Service
b) Design and test pressures
c) Maximum flow and flow direction
d) Size
e) Tag Number

Tag numbers will be indicated on the drawing submitted for approval during contract stage.

7.03.00 Each motor / actuator shall be provided with a name plate indicating the following details:

a) Supply conditions.
b) KW Rating
c) Make

8.00.00 **DRAWINGS, DATA & INFORMATION TO BE SUBMITTED AFTER THE AWARD OF CONTRACT**:

The drawings, data and other documents as required in Data Sheet-C shall be furnished after the award of contract.

1.00.00 **DRAWINGS, DATA AND INFORMATION TO BE SUBMITTED AFTER THE AWARD OF CONTRACT:**

After the award of contract, the following drawings, data and information is to be submitted for review / approval of BHEL.

1.01.00 The drawings to be submitted by bidder in event of award of contract shall be as per NIT.

1.01.01 Data Sheet -B.

1.01.02 Final versions of the following drawings to enable BHEL to finalise the layout and to design foundations and structures.

a) General arrangement / Installation drawings of the Self Cleaning Strainer with all accessories, indicating the principal dimensions and weights of equipment offered, size and location of various nozzle connections, withdrawal space and scope of supply etc.

b) Foundation arrangement drawings (wherever applicable) showing load data on supports, size and location of anchor bolts etc.

1.02.00 **Within the stipulated time period as per vendor's drawing/document list, the following shall be submitted:**

1.02.01 Cross-sectional/detailed drawings of filter housing/body, filter screen/section assembly, flushing / backwash unit, differential pressure measuring system, actuators, motors, control panel etc. indicating bill of quantities and materials of construction.

10.02.02 Flow and control logic diagrams for complete filter during normal and flushing operation and system write-up covering all modes of operation.

1.02.03 Final version of performance evaluation procedures at site.

1.02.04 Detailed schedule of valves indicating tag numbers, type, make, size, pressure & temperature ratings, materials etc.

1.02.05 Detailed schedule of power & control cable.

1.02.06 Detailed schedule of piping and fittings indicating sizes, materials, maximum working pressure & temperatures etc.

1.02.07 Control panel layout and list of instruments provided on control panel and internal wiring diagrams.

1.02.08 List of annunciations, protections and interlocks provided.

1.02.09 Detailed drawings of flanges.

1.02.10 Quality Plan

1.02.11 Material test certificates.

1.02.12 Shop tests reports and certificates.

1.02.13 Write-up and instruction manuals for erection, operation and maintenance.

1.02.14 Storage instructions.

1.02.15 Vendor to send 3 sets of final documents (O&M Manual, GA drg, P&ID) direct to site under intimation to PEM.

SUB-SECTION - IIB

STANDARD TECHNICAL SPECIFICATION (ELECTRICAL)

GENERAL TECHNICAL REQUIREMENTS

FOR

LV MOTORS

SPECIFICATION NO.: PE-SS-999-506-E101 Rev 00

1.0 INTENT OF SPECIFIATION

The specification covers the design, materials, constructional features, manufacture, inspection and testing at manufacturer's work, and packing of Low voltage (LV) squirrel cage induction motors along with all accessories for driving auxiliaries in thermal power station.

Motors having a voltage rating of below 1000V are referred to as low voltage (LV) motors.

2.0 CODES AND STANDARDS

Motors shall fully comply with latest edition, including all amendments and revision, of following codes and standards:

IS:325	Three phase Induction motors
IS : 900	Code of practice for installation and maintenance of induction motors
IS: 996	Single phase small AC and universal motors
IS: 4722	Rotating Electrical machines
IS: 4691	Degree of Protection provided by enclosures for rotating electrical machines
IS: 4728	Terminal marking and direction of rotation rotating electrical machines
IS: 1231	Dimensions of three phase foot mounted induction motors
IS: 8789	Values of performance characteristics for three phase induction motors
IS: 13555	Guide for selection and application of 3-phase A.C. induction motors for different types of driven equipment
IS: 2148	Flame proof enclosures for electrical appliance
IS: 5571	Guide for selection of electrical equipment for hazardous areas
IS: 12824	Type of duty and classes of rating assigned
IS: 12802	Temperature rise measurement for rotating electrical machnines
IS: 12065	Permissible limits of noise level for rotating electrical machines
IS: 12075	Mechanical vibration of rotating electrical machines

In case of imported motors, motors as per IEC-34 shall also be acceptable.

3.0 DESIGN REQUIREMENTS

3.1 Motors and accessories shall be designed to operate satisfactorily under conditions specified in data sheet-A and Project Information, including voltage & frequency variation of supply system as defined in Data sheet-A

3.2 Motors shall be continuously rated at the design ambient temperature specified in Data Sheet-A and other site conditions specified under Project Information
Motor ratings shall have at least a 15% margin over the continuous maximum demand of the driven equipment, under entire operating range including voltage & frequency variation specified above.

3.3 Starting Requirements

3.3.1 Motor characteristics such as speed, starting torque, break away torque and starting time shall be properly co-ordinated with the requirements of driven equipment. The accelerating torque at any speed with the minimum starting voltage shall be at least 10% higher than that of the driven equipment.

3.3.2 Motors shall be capable of starting and accelerating the load with direct on line starting without exceeding acceptable winding temperature.

The limiting value of voltage at rated frequency under which a motor will successfully start and accelerate to rated speed with load shall be taken to be a constant value as per Data Sheet - A during the starting period of motors.

3.3.3 The following frequency of starts shall apply

i) Two starts in succession with the motor being initially at a temperature not exceeding the rated load temperature.

ii) Three equally spread starts in an hour the motor being initially at a temperature not exceeding the rated load operating temperature. (not to be repeated in the second successive hour)

iii) Motors for coal conveyor and coal crusher application shall be suitable for three consecutive hot starts followed by one hour interval with maximum twenty starts per day and shall be suitable for mimimum 20,000 starts during the life time of the motor

3.4 **Running Requirements**

3.4.1 Motors shall run satisfactorily at a supply voltage of 75% of rated voltage for 5 minutes with full load without injurious heating to the motor.

3.4.2 Motor shall not stall due to voltage dip in the system causing momentary drop in voltage upto 70% of the rated voltage for duration of 2 secs.

3.5 **Stress During bus Transfer**

3.5.1 Motors shall withstand the voltage, heavy inrush transient current, mechanical and torque stress developed due to the application of 150% of the rated voltage for at least 1 sec. caused due to vector difference between the motor residual voltage and the incoming supply voltage during occasional auto bus transfer.

3.5.2 Motor and driven equipment shafts shall be adequately sized to satisfactorily withstand transient torque under above condition.

3.6 Maximum noise level measured at distance of 1.0 metres from the outline of motor shall not exceed the values specified in IS 12065.

3.7 The max. vibration velocity or double amplitude of motors vibration as measured at motor bearings shall be within the limits specified in IS: 12075.

4.0 **CONSTRUCTIONAL FEATURES**

4.1 Indoor motors shall conform to degree of protection IP: 54 as per IS: 4691. Outdoor or semi-indoor motors shall conform to degree of protection IP: 55 as per IS: 4691and shall be of weather-proof construction. Outdoor motors shall be installed under a suitable canopy

4.2 Motors upto 160KW shall have Totally Enclosed Fan Cooled (TEFC) enclosures, the method of cooling conforming to IC-0141 or IC-0151 of IS: 6362.

Motors rated above 160 KW shall be Closed Air Circuit Air (CACA) cooled

4.3 Motors shall be designed with cooling fans suitable for both directions of rotation.

4.4. Motors shall not be provided with any electric or pneumatic operated external fan for cooling the motors.

4.5 Frames shall be designed to avoid collection of moisture and all enclosures shall be provided with facility for drainage at the lowest point.

4.6 In case Class 'F' insulation is provided for LV motors, temperature rise shall be limited to the limits applicable to Class 'B' insulation.
In case of continuous operation at extreme voltage limits the temperature limits specified in table-1 of IS:325 shall not exceed by more than 10°C.

4.7 **Terminals and Terminal Boxes**

4.7.1 Terminals, terminal leads, terminal boxes, windings tails and associated equipment shall be suitable for connection to a supply system having a short circuit level, specified in the Data Sheet-A.

Unless otherwise stated in Data Sheet-A, motors of rating 110 kW and above will be controlled by circuit breaker and below 110 kW by switch fuse-contactor. The terminal box of motors shall be designed for the fault current mentioned in data sheet "A".

4.7.2 unless otherwise specified or approved, phase terminal boxes of horizontal motors shall be positioned on the left hand side of the motor when viewed from the non-driving end.

4.7.3 Connections shall be such that when the supply leads R, Y & B are connected to motor terminals A B & C or U, V & W respectively, motor shall rotate in an anticlockwise direction when viewed from the non-driving end. Where such motors require clockwise rotation, the supply leads R, Y, B will be connected to motor terminals A, C, B or U W & V respectively.

4.7.4 Permanently attached diagram and instruction plate made preferably of stainless steel shall be mounted inside terminal box cover giving the connection diagram for the desired direction of rotation and reverse rotation.

4.7.5 Motor terminals and terminal leads shall be fully insulated with no bar live parts. Adequate space shall be available inside the terminal box so that no difficulty is encountered for terminating the cable specified in Data Sheet-A.

4.7.6 Degree of protection for terminal boxes shall be IP 55 as per IS 4691.

4.7.7 Separate terminal boxes shall be provided for space heaters.. If this is not possible in case of LV motors, the space heater terminals shall be adequately segregated from the main terminals in the main terminal box. Detachable gland plates with double compression brass glands shall be provided in terminal boxes.

4.7.8. Phase terminal boxes shall be suitable for 360 degree of rotation in steps of 90 degree for LV motors.

4.7.9 Cable glands and cable lugs as per cable sizes specified in Data Sheet-A shall be included. Cable lugs shall be of tinned Copper, crimping type.

4.8 Two separate earthing terminals suitable for connecting G.I. or MS strip grounding conductor of size given in Data Sheet-A shall be provided on opposite sides of motor frame. Each terminal box shall have a grounding terminal.

4.9 **General**

4.9.1 Motors provided for similar drives shall be interchangeable.

4.9.2 Suitable foundation bolts are to be supplied alongwith the motors.

4.9.3 Motors shall be provided with eye bolts, or other means to facilitate safe lifting if the weight is 20Kgs. and above.

4.9.4 Necessary fitments and accessories shall be provided on motors in accordance with the latest Indian Electricity rules 1956.

4.9.5 All motors rated above 30 kW shall be provided with space heaters to maintain the motor internal air temperature above the dew point. Unless otherwise specified, space heaters shall be suitable for a supply of 240V AC, single phase, 50 Hz.

4.9.6 Name plate with all particulars as per IS: 325 shall be provided

4.9.7 Unless otherwise specified, the colour of finish shall be grey to Shade No. 631 and 632 as per IS:5 for motors installed indoor and outdoor respectively. The paint shall be epoxy based and shall be suitable for withstanding specified site conditions.

5.0 INSPECTION AND TESTING

5.1 All materials, components and equipments covered under this specification shall be procured, manufactured, as per the BHEL standard quality plan No. PED-506-00-Q-006/0 and PED-506-00-Q-007/2 enclosed with this specification and which shall be complied.

5.2 LV motors of type-tested design shall be provided. Valid type test reports not more than 5 year shall be furnished. In the absence of these, type tests shall have to be conducted by manufacturer without any commercial implication to purchaser.

5.3 All motors shall be subjected to routine tests as per IS: 325 and as per BHEL standard quality plan.

5.4 Motors shall also be subjected to additional tests, if any, as mentioned in Data Sheet A.

6.0 DRAWINGS TO BE SUBMITTED AFTER AWARD OF CONTRACT

a) OGA drawing showing the position of terminal boxes, earthing connections etc.
b) Arrangement drawing of terminal boxes.
c) Characteristic curves:
(*To be given for motor above 55 kW unless otherwise specified in Data Sheet*).

i) Current vs. time at rated voltage and minimum starting voltage.
ii) Speed vs. time at rated voltage and minimum starting voltage.
iii) Torque vs. speed at rated voltage and minimum voltage.
For the motors with solid coupling the above curves i), ii), iii) to be furnished for the motors coupled with driven equipment. In case motor is coupled with mechanical equipment by fluid coupling, the above curves shall be furnished with and without coupling.
iv) Thermal withstand curve under hot and cold conditions at rated voltage and max. permissible voltage.

MOTOR

TESTS/CHECKS / TEMS/COMPONENTS	Visual	Dimensional	Make/Type/Rating /General Physical Inspection	Mech/Chem. Properties	NDT /DP/MPI/UT	Metallography	Electrical Characteristics	Welding/Brazing(WPS/PQR)	Heat Treatment
Plates for stator frame, end shield, spider etc.	Y	Y	Y	Y	Y				Y
Shaft	Y	Y	Y	Y	Y	Y			Y
Magnetic Material	Y	Y	Y	Y			Y		
Rotor Copper/Aluminium	Y	Y	Y	Y			Y		Y
Stator copper	Y	Y	Y	Y			Y		Y
SC Ring	Y	Y	Y	Y	Y		Y	Y	Y
Insulating Material	Y		Y	Y			Y		
Tubes, for Cooler	Y	Y	Y	Y	Y				Y
Sleeve Bearing	Y	Y	Y	Y	Y				Y
Stator/Rotor, Exciter Coils	Y	Y	Y				Y	Y	
Castings, stator frame, terminal box and bearing housing etc.	Y	Y	Y	Y	Y			Y	
Fabrication & machining of stator, rotor, terminal box	Y	Y			Y			Y	Y
Wound stator	Y	Y					Y	Y	
Wound Exciter	Y	Y					Y	Y	
Rotor complete	Y	Y					Y		
Exciter, Stator, Rotor, Terminal Box assembly	Y	Y					Y		
Accessories, RTD, BTD,CT, Space heater, antifriction bearing, gaskets etc.	Y	Y	Y						
Complete Motor	Y	Y	Y						

Note: 1. This is an indicative list of tests/checks. The manufacture is to furnish a detailed Quality Plan indicating the practices & Procedure followed along with relevant supporting documents during QP finalization. However, No QP for LT motor upto 50KW.

2. Additional routine tests for Flame proof motors shall be applicable as per relevant standard

3. Makes of major bought out items for HT motors will be subject to NTPC approval.

Y1 = for HT Motor / Machines only.

MOTOR

TESTS/CHECKS / ITEMS/COMPONENTS	Magnetic Characteristics	Hydraulic/Leak/Pressure Test	Thermal Characteristics	Run out	Dynamic Balancing	Routine & Acceptance tests as per IS-325/IS-4722 /IS- 9283/IS 2148/IEC60034\IEC 60079-I	vibration	Over speed	Tan delta, shaft voltage & polarization index test	Paint shade, thickness & adhesion
Plates for stator frame, end shield, spider etc.										
Shaft										
Magnetic Material	Y		Y							
Rotor Copper/Aluminium										
Stator copper			Y							
SC Ring										
Insulating Material			Y							
Tubes for Cooler		Y								
Sleeve Bearing		Y								
Stator/Rotor, Exciter Coils										
Castings, stator frame, terminal box and bearing housing etc.										
Fabrication & machining of stator, rotor, terminal box										
Wound stator										
Wound Exciter										
Rotor complete				Y	Y					
Exciter, Stator, Rotor, Terminal Box assembly										
Accessories, RTD, BTD,CT, , Space heater, antifriction bearing, gaskets etc.										
Complete Motor						Y	Y	Y	Y1	Y

Note: 1. This is an indicative list of tests/checks. The manufacture is to furnish a detailed Quality Plan indicating the practices & Procedure followed along with relevant supporting documents during QP finalization. However, No QP for LT motor upto 50KW.

2. Additional routine tests for Flame proof motors shall be applicable as per relevant standard

3. Makes of major bought out items for HT motors will be subject to NTPC approval.

Y1 = for HT Motor / Machines only.

QUALITY PLAN FOR MOTORS BELOW 55 KW (LV)

		QUALITY PLAN	CUSTOMER :			PROJECT TITLE			SPECIFICATION : NUMBER :			
			BIDDER/ VENDOR :			QUALITY PLAN NUMBER PED-506-00-Q-006, REV-01			SPECIFICATION TITLE			
		SHEET 1 OF 2	SYSTEM			ITEM AC ELECT. MOTORS BELOW 55KW (LV)			SECTION			VOLUME III
SL. NO.	COMPONENT/OPERATION	CHARACTERISTICS CHECK	CAT.	TYPE/ METHOD OF CHECK	EXTENT OF CHECK	REFERENCE DOCUMENT	ACCEPTANCE NORM	FORMAT OF RECORD	AGENCY P	W	V	REMARKS
1	**2**	**3**	**4**	**5**	**6**	**7**	**8**	**9**	**10**			**11**
1.0	ASSEMBLY	1.WORKMANSHIP	MA	VISUAL	100%	MANUF'S SPEC	MANUF'S SPEC	-DO-	2	-	-	
		2.DIMENSIONS	MA	-DO-	-DO-	MFG. DRG./ MFG. SPEC.	MFG. DRG./ MFG. SPEC.	-DO-	2	-	-	
		3.CORRECTNESS COMPLETENESS TERMINATIONS/ MARKING/COLOUR CODE	MA	VISUAL	100%	MFG.SPEC./ RELEVANT IS	MFG.SPEC. RELEVANT IS	-DO-	2	-	-	
2.0	PAINTING	1.SHADE	MA	VISUAL	SAMPLE	MANUFR'S SPEC/BHEL SPEC./RELEVANT STANDARD	BHEL SPEC. SAME AS COL.7	LOG BOOK	2	-	-	
3.0	TESTS	1.ROUTINE TEST INCLUDING SPECIAL TEST AS PER BHEL SPEC.	MA	-DO-	100%	IS-325/ BHEL SPEC./ DATA SHEET	SAME AS COL.7	TEST REPORT	2	1		NOTE -1 & NOTE-3
		2.OVERALL DIMENSIONS & ORIENTATION	MA	MEASUREMENT & VISUAL	100%	APPROVED DRG/DATA SHEET	APPROVED DRG/DATA SHEET & RELEVANT IS	INSPN. REPORT	2	1	-	NOTE -1 & NOTE-3

BHEL	**PARTICULARS**	**BIDDER/VENDOR**
	NAME	
	SIGNATURE	

		QUALITY PLAN	CUSTOMER :			PROJECT TITLE			SPECIFICATION : NUMBER :			
			BIDDER/ VENDOR :			QUALITY PLAN NUMBER PED-506-00-Q-006, REV-01			SPECIFICATION : TITLE :			
		SHEET 2 OF 2	SYSTEM			ITEM AC ELECT. MOTORS BELOW 55KW (LV)			SECTION			VOLUME III
SL. NO.	COMPONENT/OPERATION	CHARACTERISTICS CHECK	CAT.	TYPE/ METHOD OF CHECK	EXTENT OF CHECK	REFERENCE DOCUMENT	ACCEPTANCE NORM	FORMAT OF RECORD	AGENCY P	W	V	REMARKS
1	**2**	**3**	**4**	**5**	**6**	**7**	**8**	**9**	**10**			**11**
		3.NAMEPLATE DETAILS	MA	VISUAL	100%	IS-325 & DATA SHEET	IS-325 & DATA SHEET	INSPN. REPORT	2	1	-	

NOTES:

1 ROUTINE TESTS ON 100% MOTORS SHALL BE DONE BY THE VENDOR. HOWEVER, BHEL SHALL WITNESS ROUTINE TESTS ON RANDOM SAMPLES. THE SAMPLING PLAN SHALL BE MUTUALLY AGREED UPON

2 WHERE EVER CUSTOMER IS INVOLVED IN INSPECTION, (1) SHALL MEAN BHEL AND CUSTOMERS BOTH TOGETHER.

3 FOR EXHAUST/VENTILATION FAN MOTORS OF RATING UPTO 1.5KW , ONLY ROUTINE TEST CERTIFICATES SHALL BE FURNISHED FOR SCRUTINY.

Legends for Inspection agency

1. BHEL/CUSTOMER
2. VENDOR (MOTOR MANUFACTURER)
3. SUB-VENDOR (RAW MATERIAL/COMPONENTS SUPPLIER)

P. PERFORM
W. WITNESS
V. VERIFY

BHEL	**PARTICULARS**	**BIDDER/VENDOR**	
	NAME		
	SIGNATURE		
	DATE		BIDDER'S/VENDORS COMPANY SEAL

SUB-SECTION - IIC

STANDARD TECHNICAL SPECIFICATION (C &I)

1.0 SCOPE

This specification covers the Design, Manufacture, Inspection and Testing at the manufacturer's works, proper packing for transportation and delivery to site, supervision, erection, and commissioning at site of Local Panels required for control and monitoring of the Auxiliary Plant & Equipment.

2.0 CODES AND STANDARDS

2.1 All the equipments specified herein shall comply with the requirements of the latest issue of the relevant National and International standards.

2.2 As a minimum requirement, the following standards shall be complied with:

a) IS-6005 : 1998 : Code of practice for phosphating of iron and steel.
b) IS-5 : 2007 : Colors for ready mixed paints and enamels.
c) IS-1248:2003 : Direct Acting Indicating Analog Elec Measuring Instruments.
d) IS/IEC 60947:Part 1:2004 : Low Voltage switchgear & control gear: Part-I (General Rules)
e) IS-8828:1996 : Circuit breaker for household and similar installations.
f) IS-13947 (Part-I):1993 : Low Voltage switchgear & control gear : Part-I (General Rules)
g) ISA-18.1:1979 : Annunciator Sequences and Specification
h) NFPA-496:2003 : Purged & Pressurised Enclosure for Electrical Equipment in Hazardous Locations.

3.0 TECHNICAL REQUIREMENTS

3.1 Panel Construction

3.1.1 The local panels shall house the secondary instruments, annunciation system, Single loop controller, Control switches / push buttons, indicating lamps/LED cluster, relays, timers and other devices required for operation and monitoring of the equipment locally.

3.1.2 The panels shall be of free standing type either welded construction on angle iron (minimum section of 50 x 50 x 4 mm) structure or folded construction by sheet metal formation depending upon the equipments to be mounted on it. The panels shall be robustly built and stiffeners as necessary shall be provided.

3.1.3 The panel shall be suitably reinforced to ensure adequate support for all instruments mounted thereon. All welds on exposed panel surfaces shall be ground smooth.

3.1.4 The salient features of construction shall be:

Sheet material: Cold rolled sheet steel
Frame thickness: Not less than 3.0mm
Enclosure thickness: Not less than 2.5 mm for load bearing sections (Mounted with instruments)
1.6 mm for doors and Not less than 2.0 mm for others

Gland plate thickness: 3.0mm
Base channel: ISMC 100 with anti-vibration mounting & foundation bolts.

3.1.5 The panel shall be provided with rear doors with integral lockable handle. The door when locked shall be held at minimum three places. The door width shall not be more than 550mm.The doors shall be provided with suitable stiffeners to prevent buckling. The handle shall be on the right side of the door. The door shall be removable type with concealed hinges to facilitate maintenance work. Suitable pocket inside the door shall be provided for keeping the drawings / documents. Double door shall be provided with suitable glass windows, as per the requirement.

3.1.6 Suitable neoprene gasket shall be provided on all doors and removable covers. Suitable ventilation system along with louvers shall be provided at bottom and top of the doors covered with removable wire mesh.

3.1.7 The class of protection shall be in accordance with IP-42 unless otherwise specified

3.1.8 All steel surfaces shall be cleaned by sand / pellet blasting, treated for pickling, degreasing and phosphating etc. by seven tank method. The panel shall have a high quality finish and appearance. The panel shall be painted with two coats of primer followed by two coats of epoxy / synthetic enamel based final paint of color shade and finish Minimum thickness of the paint shall be 85 microns for external paint and 70 microns for internal paint.

3.1.9 The cable glands of the required size and type shall be supplied alongwith the Panel.

3.1.10 All operable and indicating devices shall be mounted on the front of the panel while aux. Relays / timers MCBs etc. required for realization of control logics shall be mounted on a mounting plate inside the panel. Auxiliary relays and timers etc. shall be grouped according to the control function.
No operable or indicating devices shall be mounted below 750 mm and above 1800 mm (w.r.t. finished ground level). The devices shall be located in such a way so as to ensure easy access for operation / maintenance.

3.1.11 Single / dual control power supply feeders of voltage class shall be provided by the purchaser. In case redundant power supply feeders are provided then auto changeover unit shall be mounted on the panel are in the panel supplier's scope. Where DC control power supply is specified an additional 240V, 50 Hz AC supply feeder for powering of space heater and lighting shall be provided by the purchaser. Suitable arrangement shall be provided inside the panel to receive and terminate the power supply feeder(s). For this purpose MCBs of suitable current rating shall be provided by the vendor. A supervisory relay along with a pilot lamp to indicate control supply 'ON' shall be provided on the panel. Any other power supply required for the operation of the devices mounted in the panel shall be arranged by the vendor.

3.1.12 The internal wiring shall be carried out with 1100 volt grade PVC insulated copper multi strand wire / flexible of 1.5mm2 size. AC & DC wires shall be kept separate from each other. Separate coloured wires to be used for AC and DC circuits. All wires shall be properly numbered and identified with ferrules as per the Control scheme / wiring diagram. Wires shall be routed and run through PVC troughs.

3.1.13 Terminal blocks shall be clip on type, 1100 volts grade. Separate terminal blocks shall be used for AC & DC circuits. The terminals shall be suitable for terminating 0.5 mm2 to 2.5mm2 external cables. The TB points in terminal block shall be cage clamp type / screw type. The terminal for ammeters shall be provided with removable links for shorting CTs. Each terminal strip shall be provided with identification strip. The terminal shall not be mounted below 250 mm height from finished floor. The panel shall have ten (20) percent spare terminal.

3.1.14 The interior of each panel shall be suitably illuminated through fluorescent lamps / tube lights with shrouded cover of minimum 15W operable on 240V 50 Hz AC power supply through panel door switch. A 15 Amp. 3-pin Power receptacle shall be provided.

3.1.15 Suitable space heaters operable on 240 Volts 50 Hz AC power system shall be provided at the panel bottom. These shall be designed to maintain the panel temperature five (5) deg. C above the ambient temperature during maintenance shutdown. Suitable isolating and control devices comprising of MCB, thermostat etc. shall be provided for the space heater.

3.1.16 The panel shall be provided with a copper earth bus of 25 x 6 mm size running throughout the width of the panel. It shall be terminated internally with 10 mm bolts at extreme ends for connection to; main station earth. The panel mounted equipments / devices shall be connected to earth bus through green coloured PVC insulated stranded copper conductor of 2.5 mm2 size.

3.1.17 Local Panel shall be provided with main name plate of 150 mm x 40 mm size having inscription of 20 mm height. The individual devices on the panels shall be as provided with separate name plate with inscription of 3 mm height. The instrument / devices shall be provided with stick on label plates inside the panel. The material of the main and individual labels shall be three (3) ply 3 mm thick Traffolyte

Sheet / 2 mm Anodised Aluminium Plate. The inscription shall be with white letters on black background on traffolyte sheet. The labels shall be fixed by self tapping non-rusting screws.

3.1.18 Vendor shall furnish electric load and heat load list (in case panel is to be placed in ac environment) of each panel.

3.2 Hazardous Area Panel Requirement

3.2.1 The Local Panel located in hazardous area shall be pressurized as per NFPA-496 requirements to render it non-hazardous. Alarms shall be provided for local and remote annunciation when pressurisation falls below 2.5 mm of water column. Protection shall be of type Z of NFPA-496. It shall not be possible to switch ON the power of purged section unless it is purged as per the recommendation of NFPA-496. Vendor must provide a protective device on the panel to protect the panel from over pressurisation.

3.2.2 Vendor shall supply pressurisation kit consisting of valves, restriction orifices, dual filter regulation, pressure gauges, pressure switches, rotameter etc. Pressurisation kit shall be surface mounting on a metal board and located outside the local panel. Pressurisation kit shall further consist of solenoid valve flow switch, timer blow off safety device etc., so as to make purging fully automatic. However final start shall be manual. Panel protection against over pressure to be provided as per NFPA-496.

3.2.3 Pressurised local control panel pressurization kit assembly design shall provide minimum leakage flow through the Local Control Panel. Panel venting shall be as per NFPA-496.

3.2.4 All components in the local panel like indicating instruments, push buttons switches, lamps etc., which are required to be energized without panel pressurization or before completion of purge cycle shall be explosion proof as per NEMA-7 & suitable for area classification.

3.2.5 All push buttons etc. requiring frequent operation during machine running shall have good positive sealing. Weatherproof housing or cover to be provided wherever necessary. Vendor shall provide pressurisation bypass switch outside explosion proof enclosure of pressurized panel with lamp indication. This shall be used only during maintenance. All hinges, screws, other non-painted metallic parts shall be of stainless steel material.

3.2.6 Provision to switch off manually all types of power shall be provided in the panel. In addition, it shall also be possible to switch off power circuits / components which are powered from motor control centre or control room manually in case of pressurization failure. All such cables from MCC and main control room shall be terminated in explosion proof boxes (NEMA-7).

3.3 Control & Monitoring devices

3.3.1 Instruments like Indicators, recorders, single loop controllers etc. as applicable and specified elsewhere for the plant / equipment shall be supplied and mounted on the panel.

3.3.2 Alarm Annunciator System

It shall be solid state discrete facia type having a sequence of ISA-S18.1A or as specified, opaque facia windows of 70 mm x 50 mm size, having two (2) lamps per window, and hooter of 10W, and provision for repeat group alarm at remote. The annunciator shall be provided with ten (10) percent spare windows or minimum two (2) windows along with electronics.

3.3.3 Relays

The relays shall be electromagnetic type suitable for specified control supply. Its contact configuration and rating shall be suitable for the specified control function. However minimum contact rating shall be 5 Amp AC & 2 Amp DC as applicable. There shall be ten (10) percent spare contacts.

3.3.4 Timers

The timers shall be electronic type suitable for specified control supply. Its contact configuration and rating shall be suitable for the specified control function. However, minimum contact rating shall be 5 Amp AC & 2 Amp DC as applicable.

3.3.5 Control / Selector Switches

Switches shall be Rotary Cam type with minimum of 5 Amps AC & 2 Amp DC continuous current rating. Selector switches shall be stay put type while control switches shall be spring-return-to-neutral type. Contact configuration and rating shall be as per the control function requirement. The switches shall be lockable type wherever specified. Each switch shall be provided with engraved plates indicating the switch position / functions.

3.3.6 Push Buttons / Indicating Lights

The push buttons shall be momentary action self-resetting type, however stop P.B. for unidirectional drives shall be provided with manual reset facility. Its contact configuration & rating shall be as required for the control function but minimum 2 NO + 2 NC of 5 Amp. AC rating. It shall have round coloured projecting tab and engraved escutcheon plate / inscription plate. Colour coding of push buttons shall be as under:

RED	Motor OFF / Valve CLOSE	YELLOW	Alarm acknowledge	Left Hand Side
GREEN	Motor ON / Valve OPEN	BLACK	Lamp test	Right Hand Side

Indicating lights shall be suitable for direct connections across specified power supplies. It shall be fitted with built in resistance to prevent circuit tripping on shorting of lamp filament. It shall be fitted with LED cluster type lamp replaceable from front.

GREEN	Motor OFF / Valve CLOSED condition	AMBER	Motor tripped	Left Hand Side
RED	Motor ON / Valve OPEN condition	WHITE	Normal / healthy	Right Hand Side

3.3.7 Ammeters

Ammeter shall be 96 x 96 mm size, 90 deg. deflection, 1.5% accuracy, 1 Amp. CT operated or with 4-20mA input and Flush mounting type

Ammeters for motors shall have six (6) times folded scale at upper end to enable motor starting current indication

3.3.8 Miniature Circuit Breaker (MCB)

These shall be instantaneous magnetic trip type for short circuit in addition to current time inverse delayed thermal trip feature for over current protection. The housing of MCB shall be made of non-ignitable, high impact material. It shall have minimum short circuit rating of 9 KA for AC Voltages and 4 KA for DC Voltages.

3.3.9 Makes of various instruments / devices shall be as given below

1.	Alarm Annunciators	:	Procon / IIC
2.	Ammeters	:	AEP / IMP
3.	Control / Selector Switches	:	Alsthom / Kaycee / Siemens / L&T
4.	Push Buttons / Indicating Lamps	:	Siemens / L&T / Teknic / Alsthom
5.	Auxiliary Relays	:	Jyoti / Siemens / L&T / OEN
6.	Timers	:	L&T / Alsthom / Bhartiya Cutler Hammer
7.	MCBs	:	S&S Power Engg. / Indo Asian / MDS
8.	Terminal Blocks	:	Jyoti / Elmex

4.0 TESTING AND INSPECTION

4.1 The bidder shall adopt suitable quality assurance program to ensure that the equipments offered will meet the specification requirements in full.

4.2 BHEL's standard Quality Plan for LCP is enclosed with the specification. The bidder shall furnish his acceptance to BHEL's QP and submit the signed and stamped copy of QP along with the offer.

4.3 The vendor shall conduct the following tests as a minimum requirement:

4.3.1 Routine Tests

1. High Voltage (H.V.)
2. Insulation Resistance (I.R.)
3. Functional

4.3.2 Type Tests

1. Enclosure Class Test

5.0 SPARES AND CONSUMABLES

5.1 Commissioning Spares and consumables

The bidder shall supply all commissioning spares and consumables 'as required' during Start-up, as part of the main equipment supply.

5.2. Mandatory Spares

The bidder shall offer alongwith main offer, the Mandatory Spares as specified elsewhere in the specification. The Mandatory Spares offered shall be of the same make and type as the main equipment.

5.3. Recommended Spares

The bidder shall furnish a list of Recommended Spares indicating the normal service expectancy period and frequency of replacement; quantities recommended for 3 years operation alongwith unit rate against each item to enable BHEL/BHEL's Customer to place a separate order later, if required.

6.0 DRAWINGS AND DOCUMENTS

6.1 The bidder shall furnish the following documents in required number of copies along with the bid :

1. Data Sheet
2. General Arrangement Drawing.
3. Catalogue and technical information for instruments and devices.
4. Quality Plan.

6.2 The vendor shall furnish the following documents in required number as agreed after the award of contract:

1. Data Shee
2. GA Drawing indicating layout of instruments, construction details, foundation details, cable gland plate alongwith cable glands and all details mentioned in this specification.
3. Control Schematic Diagram along with grouping of different terminals for various functions.
4. Catalogue and technical information for instruments and devices with selected options clearly marked.
5. O&M Manuals.
6. "As Built" Drawing.
7. CDs.

7.0 MARKING AND PACKING

7.1 Panel with all instruments / devices mounted on it shall be suitably packed & protected for the entire period of despatch, storage and erection against impact, abrasion, corrossion, incidental damage due to vermin, sunlight, high temperature, rain moisture, humidity, dust, sea-water spray (where applicable) as well as rough handling and delays in Transit and storage in open.

This document is the property of NATIONAL THERMAL POWER CORPORATION LTD.
No part of this document will be reproduced by any means without the written permission.

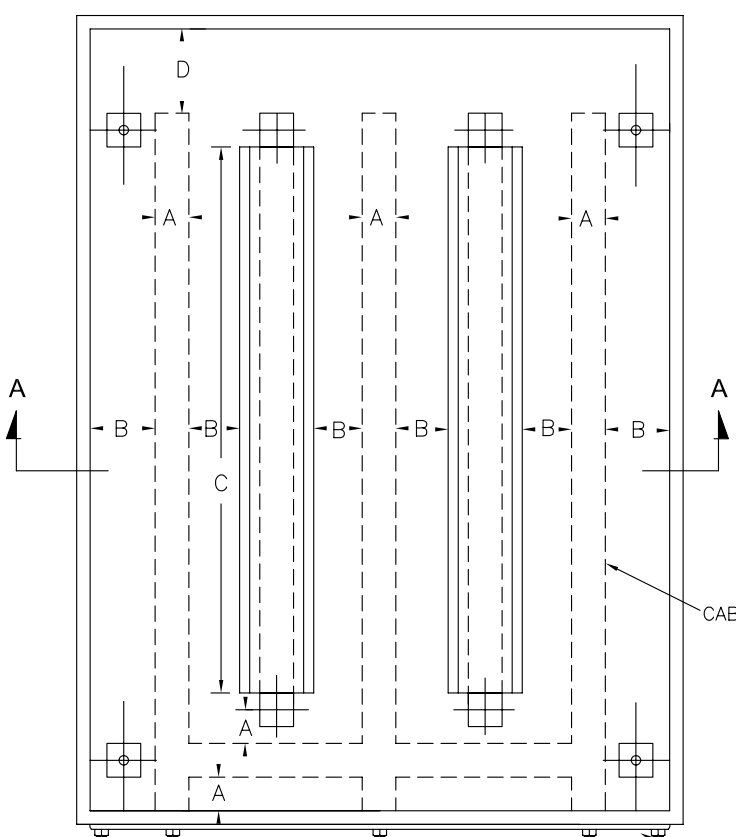

FRONT VIEW WITH COVER REMOVED

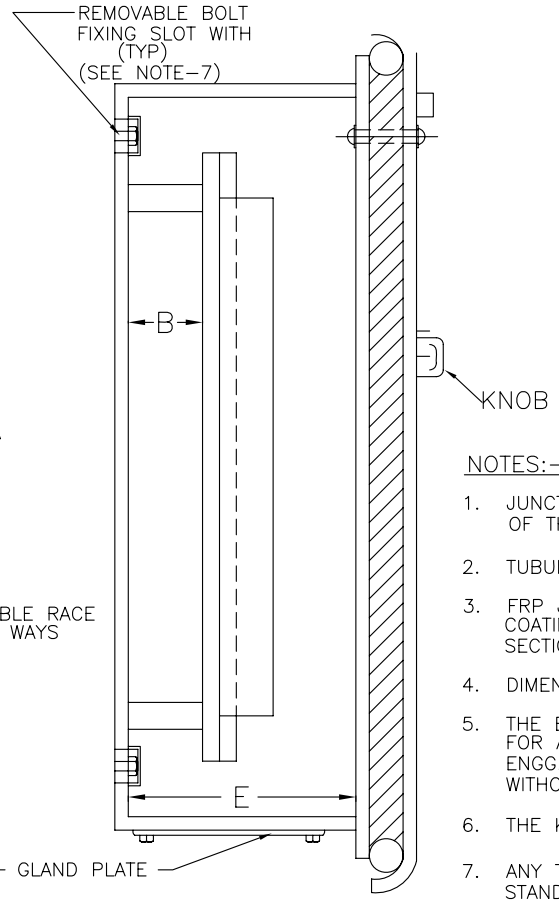

SIDE ELEVATION

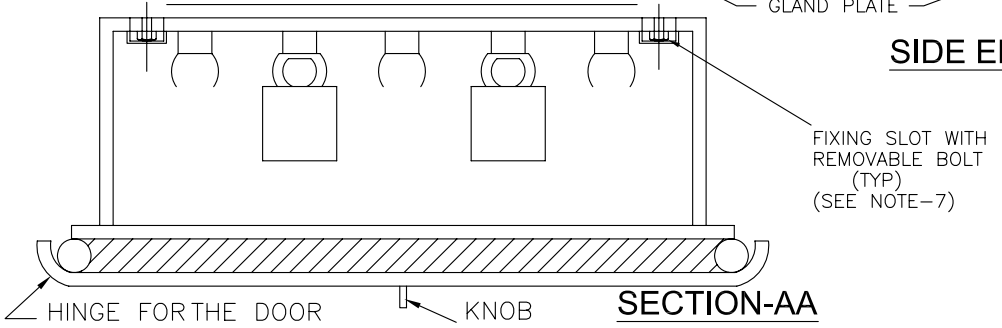

SECTION-AA

A – 75 mm
B – 25 mm
C – SEE NOTE-4
D – 100 mm
E – 150 mm

NOTES:-

1. JUNCTION BOXES SHALL HAVE GLAND PLATES AT THE BOTTOM OF THE BOX ONLY.
2. TUBULAR TYPE GASKETS WILL BE USED.
3. FRP JUNCTION BOXES, SHALL BE PROVIDED WITH POLYEUTHERENE COATING. ALSO REFER SUB SECTION INST CABLE, PART-B SECTION-VI FOR DETAILES.
4. DIMENSION OF 'C' SHALL BE BASED ON NO. OF TERMINAL BLOCKS.
5. THE EXACT TYPE & DIMENSION OF JUNCTION BOXES TO BE USED FOR A PARTICULAR APPLICATION SHALL BE AS DECIDED DURING DETAIL ENGG. STAGE AND SHALL BE SUBJECT TO EMPLOYER's APPROVAL WITHOUT ANY PRICE REPERCUSSION.
6. THE KNOB FOR ALL THE JUNCTION BOXES SHALL BE IDENTICAL.
7. ANY TYPE OF SEALED FIXING ARRANGEMENT AS PER MANUFACTURER's STANDARD CAN ALSO BE PROVIDED SUBJECT TO EMPLOYER's APPROVAL.

FOR TENDER PURPOSE ONLY

एन टी पी सी NTPC

N T P C LIMITED
(A GOVERNMENT OF INDIA ENTERPRISE)
ENGINEERING DIVISION

REV.NO.	DESCRIPTION	DRAWN	DESIGN	CHKD.	M	E	C	C&I	ARCH.	APPD	DATE
D	GENERALLY REVISED		JM	KS							21.08.12
C	GENERALLY REVISED		JM	KS							04.08.06
B	GENERALLY REVISED	S.K.	A.R	PS							
A	FIRST ISSUE	S.K.	A.R	PS							04.05.05

CLEARED BY

PROJECT: TYPICAL THERMAL POWER PLANT

TITLE: G.A. OF JUNCTION BOX

SIZE	SCALE	DRG. NO.	REV. NO.
A4	N.T.S.	0000-999-POI-A-017	D

`

INSTRUMENTATION CABLE, CABLE INTERCONNECTION AND TERMINATION PHILOSOPHY

5.00.00 **INSTRUMENTATION CABLE INTERCONNECTION AND TERMINATION PHILOSOPHY**

The cable interconnection philosophy to be adopted shall be such that extensive grouping of signals by large scale use of field mounted Group Junction Boxes (JBs) at strategic locations (where large concentration of signals are available, e.g. valves limit & torque switches, switchgear) is done and consequently cable with higher number of pairs are extensively used. The details of termination to be followed are mentioned in the given Table A.

TABLE A: CABLE TERMINATION TO BE FOLLOWED

Application		**Type Of Termination**		**Type Of Cable**
FROM (A)	**TO (B)**	**END A**	**END B**	
Valves/dampers drives (Integral Junction box)	Marshalling / Marshalling – cum Termination Cubicle / local group JB	Plug in connector	Post mount cage clamp type.	G
Transmitters, Process Actuated switches mounted in LIE/LIR	Integral Junction box of LIE/LIR	Plug in connector	Cage clamp (Rail mount) type.	F,G
RTD heads	Local junction box	Plug in connector	Cage clamp (Rail mount) type.	F
Thermocouple	Local junction box / CJC box (if applicable)	Plug in connector	Cage clamp (Rail mount) type.	A, B, C*
Other Field mounted Instrument	Local JB / Group JB	Plug in connector	Cage clamp (Rail mount) type.	F,G
RTD	Temperature transmitter	Plug in connector	Screwed, Cage clamp type	F
Thermocouple	Temperature transmitter	Plug in connector	Screwed, Cage clamp type	A, B, C*

Application		Type Of Termination		Type Of Cable
FROM (A)	**TO (B)**	**END A**	**END B**	
Local Junction box, Temperature Transmitter, Int. Junction box of LIE/ LIR/ MCC/SWGR	Group JB	Cage clamp (Rail mount) type.	Cage clamp (Rail mount) type.	F,G
Local Junction box, Temperature Transmitter, Int. Junction box of LIE/ LIR/ Group JB / MCC/SWGR	Marshalling / Marshalling – cum Termination Cubicle	Cage clamp (Rail mount) type.	Cage clamp (Post mounted) type.	F,G
Marshalling cubicle/ Termination Cabinet	Electronic system cabinet	Cage clamp (Post mounted) type.	Plug-in connector / other system as per Mfr.'s Standard	Internal wiring
Marshalling/ Termination System Cabinets	UCD mounted equipments	Cage clamp (Post mounted) type.	Plug in connector / Cage clamp type (rail mounted).	F,G (with plug-in connect or at one end)
DDCMIS/PLC cabinets	PC, Printers etc.	Plug in connector	Plug in connector	Mfr.'s Standar d

Notes

1. Normally 10% spare cores shall be provided when the numbers of pairs of cables are more than four pairs, except for pre-fabricated cables which shall be as per manufacturer's standard.

2. For analog signals, individual pair shielding & overall shielding & for Binary signals, only overall shielding of instrumentation cables shall be provided.

3 * For high temperature applications only.

4 . For connection between field/JB and DDCMIS marshalling cabinet

Minimum 4 pair instrumentation cable shall be used.

5 All the spare cores of instrumentation cable have to be terminated in Marshalling cabinets/ DCS panel end.

6 Not used.

6.00.00	**TERMINAL BLOCKS**
6.01.00	All terminal blocks shall be rail mounted/post mounted, cage clamp type with high quality non-flammable insulating material of melamine suitable for working temperature of 105 deg. C. The terminal blocks in field mounted junction boxes, temperature transmitters, instrument enclosures/racks, etc., shall be suitable for cage clamp connections. The terminal blocks in Control Equipment Room logic/termination/marshalling cubicles shall be suitable for post mounted cage clamp connection at the field input end. The exact type of terminal blocks to be provided by the Bidder and the technical details of the same including width etc. shall be subject to Employer's approval.
6.02.00	All the terminal blocks shall be provided complete with all required accessories including assembly rail, locking pin and section, end brackets, partitions, small partitions, transparent covers, support brackets, distance sleeves, warning label, marking, etc.
6.03.00	The marking on terminal strips shall correspond to the terminal numbering on wiring diagrams. At least 20% spare unused terminals shall be provided everywhere including local junction boxes, instrument racks/enclosures, termination/marshalling cabinets, etc. All terminal blocks shall be numbered for identification and grouped according to the function. Engraved labels shall be provided on the terminal blocks.
6.04.00	For terminating each process actuated switches, drive actuators, control valves, Thermocouple, RTD, etc. in Local Junction Boxes, etc, refer Drg no. 0000-999-POI-A-065.
6.05.00	The terminal blocks shall be arranged with at least 100 mm clearance between two sets of terminal blocks and between terminal blocks and junction box walls.
7.00.00	**INTERNAL PANELS/ SYSTEM CABINETS WIRING**
7.01.00	Internal panel/cabinet wiring shall be of multi-stranded copper conductor with FRLS PVC insulation without shield and outer sheath meeting the requirements of VDE 0815.
7.02.00	All internal wires shall be provided with tag and identification nos. etched on tightly fitted ferules at both ends. All wires directly connected to trip devices shall be distinguished by one additional red colour ferrule.
7.03.00	All external connection shall be made with one wire per termination point. Wires shall not be tapped or spliced between terminal points.
7.04.00	All floor slots of desk/panels/cabinets used for cable entrance shall be provided with removable gasketed gland plates and sealing material. Split type grommets shall be used for prefabricated cables.
7.05.00	All the special tools as may be required for solder less connections shall be provided by Bidder.
7.06.00	Wire sizes to be utilised for internal wiring.
	(i) Current (4-20 mA), low voltage signals (48V); Ammeter/Voltmeter circuit, control switches etc. for electrical system. — 0.5 Sq.mm.
	(ii) Power supply and internal illumination. — 2.5Sq.mm. minimum (shall be as per load requirement.)

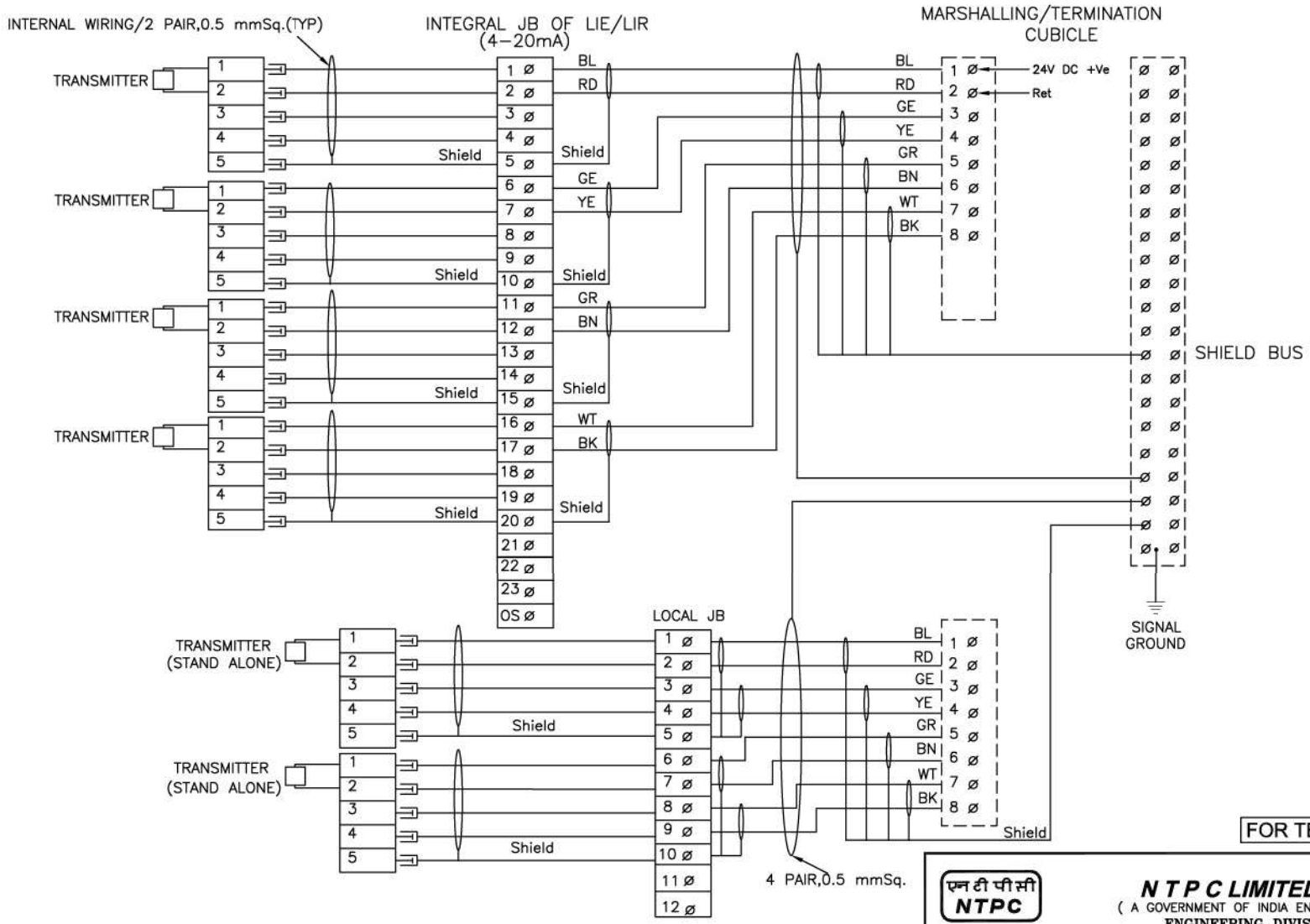

FOR TENDER PURPOSE ONLY

This document is the property of NATIONAL THERMAL POWER CORPORATION LTD.
No part of this document will be reproduced by any means without the written permission.

एन टी पी सी
NTPC

N T P C LIMITED
(A GOVERNMENT OF INDIA ENTERPRISE)
ENGINEERING DIVISION

PROJECT: TYPICAL THERMAL POWER PROJECT

TITLE: INTERFACING OF FIELD INSTRUMENTS 4-20mA

REV.NO.	DESCRIPTION	DRAWN	DESIGN	CHKD.	M	E	C	C&I	ARCH.	APPD	DATE
B	INTERNAL WIRING FOR LIE/LIR MOUNTED SHOWN WIRING OF STAND ALONE TXTR SHOWN										21.08.12
A	FIRST ISSUE										12.1.05

CLEARED BY

SIZE	SCALE	DRG. NO.	REV. NO.
A3	NTS	0000-999-POI-A-065 SH 04 OF 15	B

	TECHNICAL SPECIFICATION (C&I) FOR SCS SYSTEM	

`

INSTRUMENT INTERFACING DRAWING

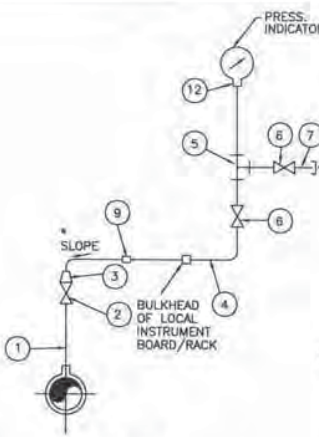

ELEVATION
INST./ SERVICE AIR

(PRESSURE INDICATORS MOUNTED REMOTE FROM INSTRUMENT SOURCE POINT)

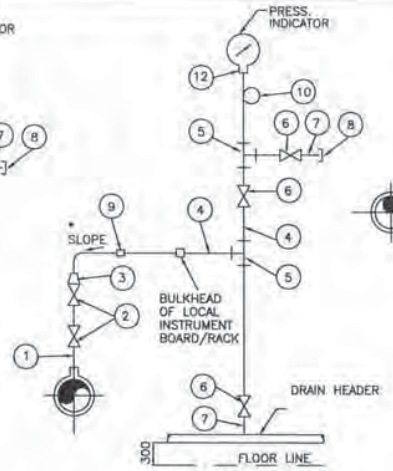

ELEVATION
STEAM SERVICE

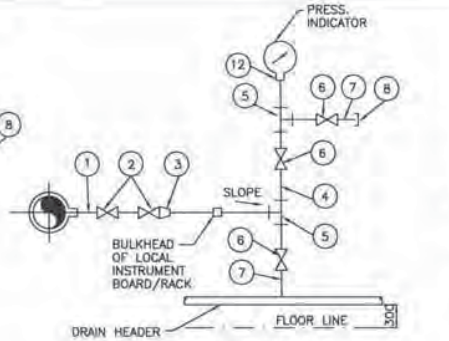

ELEVATION
LIQUID SOURCE

(GAUGE MOUNTED ABOVE INSTRUMENT SOURCE POINT)

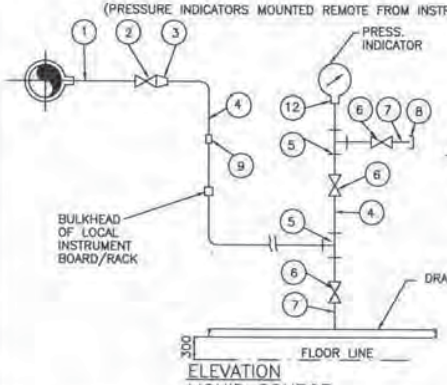

ELEVATION
LIQUID SOURCE

(GAUGE MOUNTED BELOW INSTRUMENT SOURCE POINT)

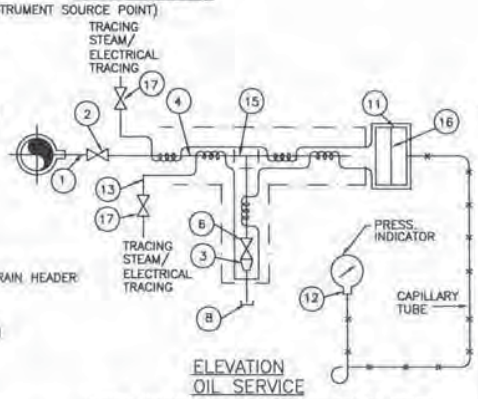

ELEVATION
OIL SERVICE

(GAUGE MOUNTED BELOW INSTRUMENT SOURCE POINT)

LIST OF MATERIALS

ITEM NO.	DESCRIPTION
1.	1/2" , 3/4" , 1" NPS SCH 40/80/160/XXS/P91 (AS PER PROCESS REQUIREMENT) NIPPLE OF MATERIAL SAME AS THAT OF MAIN PIPE.
2.	1/2"/3/4"/1' SW GLOBE VALVE/GATE VALVE
3.	3/4" / 1" x 1/2" SW REDUCING INSERT
4.	1/2" / 3/4" PIPE
5.	1/2" / 3/4" SW EQUAL TEE
6.	1/2" / 3/4" SW GLOBE VALVE.
7.	1/2" / 3/4" NPS SW x 1/2" / 3/4" NPT(M) CARBON/ALLOY STEEL NIPPLE.
8.	1/2" / 3/4" NPT(F) CAP.
9.	1/2" / 3/4" PIPE UNION.
10.	6" SS SYPHON
11.	1/2" BLIND 300lbs RF ANSI FLANGE DRILLED AND TAPED FOR 1" NPT PIPE.
12.	SUITABLE ADAPTER.
13.	1/4" CHROME MOLY STEEL TUBE.
14.	
15.	1"/3/4" SW EQUAL TEE.
16.	DIAPHRAGM(WAFER ELEMENT)
17.	ISOLATION VALVE 316 SS,1/4"SW

NOTES:-

1. THE MATERIAL SPECIFICATION AND SCHEDULE NO. OF IMPULSE PIPE & NIPPLE AS LISTED HEREIN SHALL BE AS PER TECHNICAL SPECIFICATIONS.
2. THE MATERIAL SPECIFICATION AND RATING OF FITTINGS AS LISTED SHALL BE AS PER SPECIFICATIONS. WELDED/THREADED FITTINGS SHALL CONFIRM TO ANSI-B.16-11.
3. INSTRUMENTS VALVES BODY STEM MATERIAL AND PRESSURE CLASS SHALL BE AS PER TECHNICAL SPECIFICATIONS.
4. FOR BOILER AIR/FLUE GAS SERVICES SOURCE CONNECTIONS IMPULSE PIPING AND ALL FITTINGS SHALL BE OF 3/4" NB SIZE.
5. GAUGES SHALL NOT BE MOUNTED ON THE PIPE. IT WILL BE MOUNTED ON A CHANNEL OR FRAME OR A RACK.
6. * SLOPE APPROX. 50 MM / METRE.

FOR TENDER PURPOSE ONLY

एन टी पी सी
NTPC

N T P C LIMITED
(A GOVERNMENT OF INDIA ENTERPRISE)
ENGINEERING DIVISION

PROJECT: TYPICAL THERMAL POWER PROJECT

TITLE: INSTRUMENT INSTALLATION DIAGRAM (FOR PRESSURE GAUGE)

REV.NO.	DESCRIPTION	DRAWN	DESIGN	CHKD.	M	E	C	C&I	ARCH.	APPD	DATE
A	FIRST ISSUE							T.G.			21.08.12

CLEARED BY

SIZE	SCALE	DRG. NO.	REV. NO.
A3	N.T.S.	0000-999-POI-A-022	A

This document is the property of NATIONAL THERMAL POWER CORPORATION LTD.
No part of this document will be reproduced by any means without the written permission.

This document is the property of NATIONAL THERMAL POWER CORPORATION LTD.
No part of this document will be reproduced by any means without the written permission.

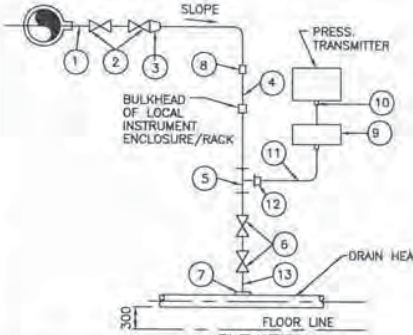

ELEVATION
TRANSMITTER MOUNTED BELOW INSTRUMENT SOURCE POINT

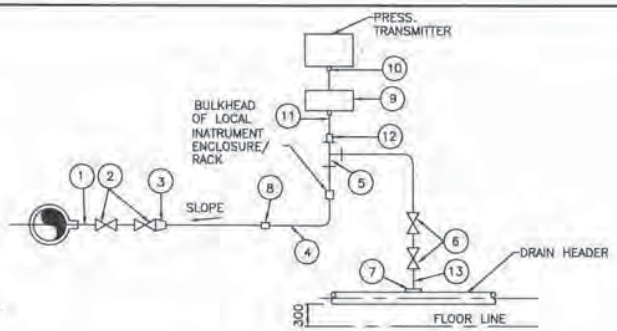

ELEVATION
TRANSMITTER MOUNTED ABOVE INSTRUMENT SOURCE POINT

LIQUID PRESSURE MEASUREMENT

LIST OF MATERIALS

ITEM NO.	DESCRIPTION
1.	1/2"/ 3/4"/1"NPS SCH. 80/160/XXS/P91 NIPPLE OF MATERIAL SAME AS THAT OF MAIN PIPE.
2.	3/4"/1" SW GLOBE VALVE.
3.	3/4"/1" TO 1/2" REDUCING INSERT
4.	1/2" NPS PIPE
5.	1/2" SW EQUAL TEE
6.	1/2"SW GLOBE VALVE
7.	1/2"NPS SCH. 80/160 SWx1/2"CS/AS COUPLER
8.	1/2" PIPE UNION
9.	2/3 VALVE MANIFOLD (FOR DETAIL SEE DRAWING NO.0000-102-POI-A-023.
10.	SUITABLE ADAPTER
11.	SS TUBE
12.	1/2" PIPE x 1/2"TUBE UNION
13.	1/2"NPS SCH. 80/160 SWx1/2" NPT(M) CS/AS NIPPLE

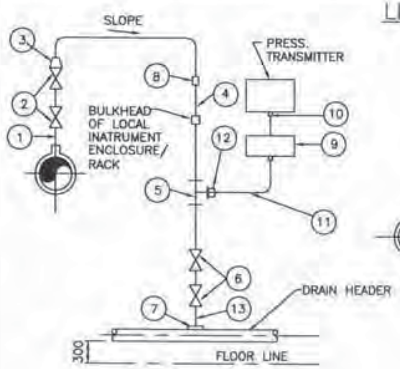

ELEVATION
TRANSMITTER MOUNTED BELOW INSTRUMENT SOURCE POINT

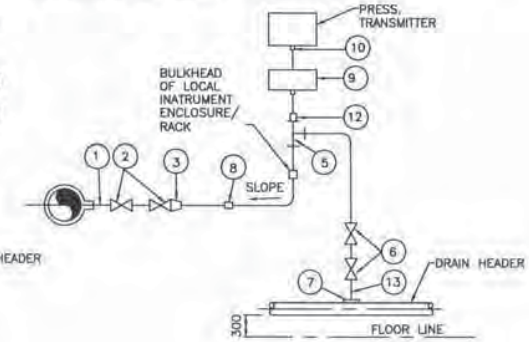

ELEVATION
TRANSMITTER MOUNTED ABOVE INSTRUMENT SOURCE POINT

STEAM PRESSURE MEASUREMENT

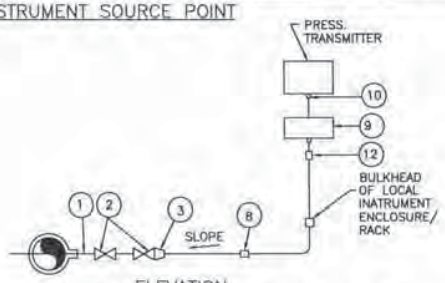

ELEVATION
VACCUM PRESSURE MEASUREMENT

NOTES:-

1. SAME NOTES UNDER DRG. NO. 0000-999-POI-A-023.
2. FOR VACUUM APPLICATION OTHER PORT OF TRANSMITTER SHALL BE KEPT OPEN TO ATMOSPHERE.

FOR TENDER PURPOSE ONLY

एन टी पी सी
NTPC

N T P C LIMITED
(A GOVERNMENT OF INDIA ENTERPRISE)
ENGINEERING DIVISION

PROJECT: TYPICAL THERMAL POWER PROJECT

TITLE: INSTRUMENT INSTALLATION DIAGRAM (PRESSURE MEASUREMENT USING PRESS /DP TRANSMITTERS STEAM/LIQUID VACUUM)

REV.NO.	DESCRIPTION	DRAWN	DESIGN	CHKD.	M	E	C	C&I	ARCH.	APPD	DATE
A	FIRST ISSUE							T.G.			21.08.12

CLEARED BY

SIZE	SCALE	DRG. NO.	REV. NO.
A3	N.T.S.	0000-999-POI-A-025	A

This document is the property of NATIONAL THERMAL POWER CORPORATION LTD.
No part of this document will be reproduced by any means without the written permission.

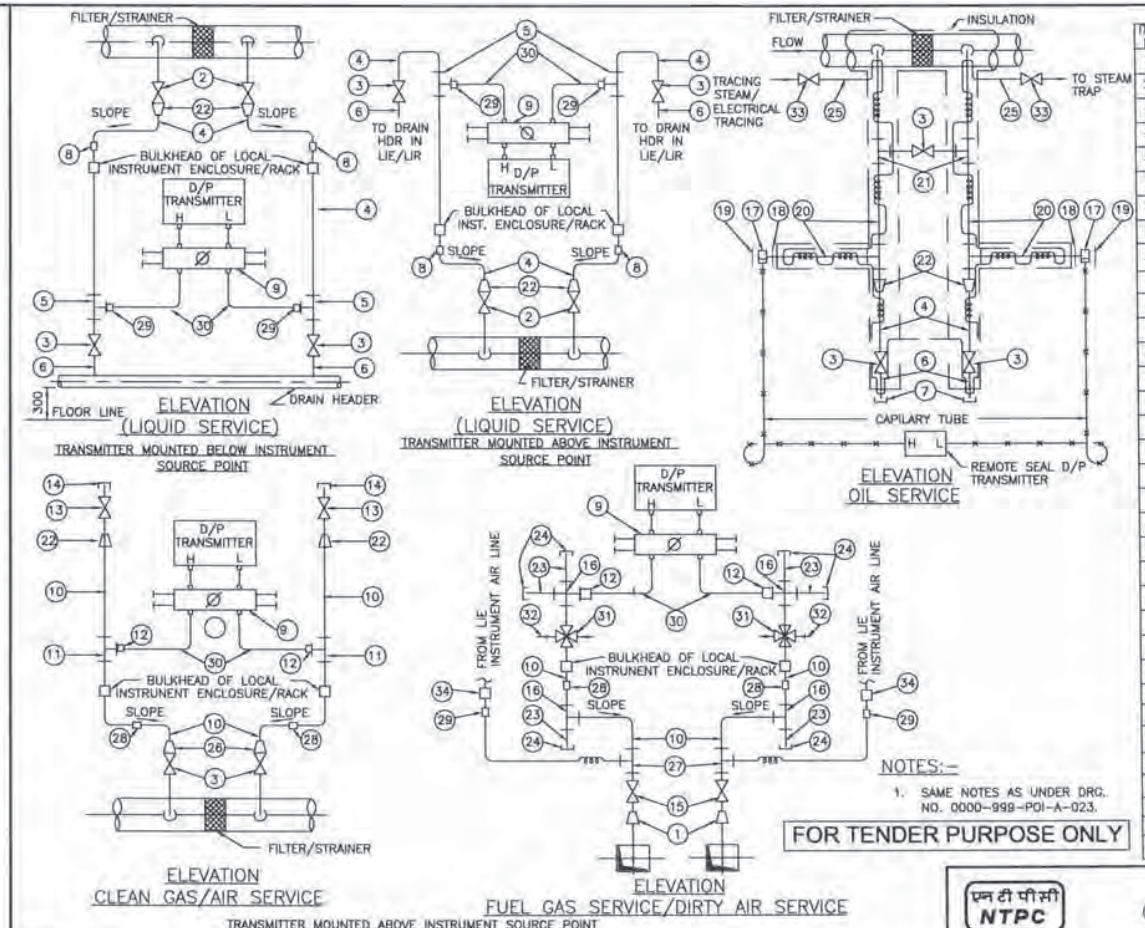

NOTES:-

1. SAME NOTES AS UNDER DRG. NO. 0000-999-POI-A-023.

FOR TENDER PURPOSE ONLY

LIST OF MATERIALS

ITEM NO.	DESCRIPTION
1.	42x2 TO 3/4" SW REDUCING INSERT.
2.	3/4" SW GLOBE VALVE.
3.	1/2" SW GLOBE VALVE FOR LIQUID APPLICATION & 3/4"/1" IN GAS/AIR APPLICATION
4.	1/2" NPS 40/80/160 (AS PER PROCESS REQUIREMENT) CARBON/ALLOY STEEL PIPE.
5.	1/2" SW EQUAL TEE.
6.	1/2" NPS SW x 1/2" NPT (M) NIPPLE.
7.	1/2" NPT (F) CAP.
8.	1/2" PIPE x 1/2" PIPE UNION.
9.	5 VALVE MANIFOLD (FOR DETAIL REFER DRAWING NO.0000-999-POI-A-026.
10.	3/4" SCH 80 CARBON/ALLOY STEEL PIPE.
11.	3/4"/1/2" SW EQUAL TEE.
12.	3/4"x1/2" TUBE UNION.
13.	1/2" SCREWED GLOBE VALVE.
14.	1/2" NPT (M) PLUG.
15.	3/4" SW GATE VALVE.
16.	3/4" SW EQUAL CROSS.
17.	WAFER ELEMENT FOR USE WITH 3"ANSI R.F. VALVE.
18.	3"BLIND 300lbs R.F. WELD NECK FLANGE DRILLED FOR 1" SCH. 40/80 PIPE.
19.	3" BLIND FLANGE.
20.	1"NPS SCH. 40/80 (AS PER PROCESS REQUIREMENT) CS PIPE.
21.	1" SW EQUAL TEE.
22.	3/4" x 1/2"SW REDUCING INSERT.
23.	3/4" SW x 3/4" NPT (M) CS/AS NIPPLE
24.	3/4" NPT (F) CS/AS CAP.
25.	1/4" NPS ALLOY STEEL PIPE.
26.	1" x 3/4" SW REDUCING INSERT.
27.	3/4" SW x 1/2" PSW BRANCH TEE.
28.	3/4" PIPE UNION
29.	1/2" CLAMP UNION (THREADED) SUITABLE FOR FLEXIBLE CONNECTION OF NYLON REINFORCED PVC TUBE.
30.	SS TUBE
31.	3/4" SW 4 WAY VALVE.
32.	QUICK DISCONNECT FITTINGS.
33.	1/4" SW ISOLATION VALVE 316SS
34.	1/2" x 1/2" SS PIPE UNION.

एन टी पी सी
NTPC

N T P C LIMITED
(A GOVERNMENT OF INDIA ENTERPRISE)
ENGINEERING DIVISION

PROJECT: TYPICAL THERMAL POWER PROJECT

TITLE: INSTRUMENT INSTALLATION DIAGRAM
DIFF. PRESS.MEASUREMENT (LIQUID, OIL, AIR/GAS SERVICE)

REV.NO.	DESCRIPTION	DRAWN	DESIGN	CHKD.	M	E	C	C&I	ARCH.	APPD	DATE
A	FIRST ISSUE							T.G.			21.08.12

CLEARED BY

SIZE	SCALE	DRG. NO.	REV. NO.
A3	N.T.S.	0000-999-POI-A-030	A

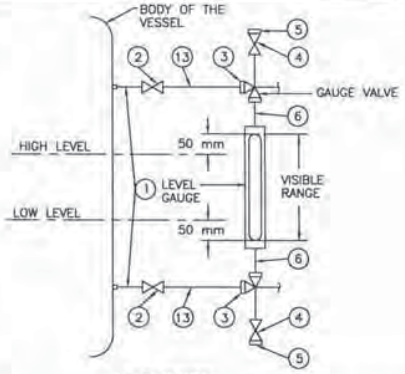

ELEVATION

LOCAL LEVEL INDICATION USING GAUGE GLASS

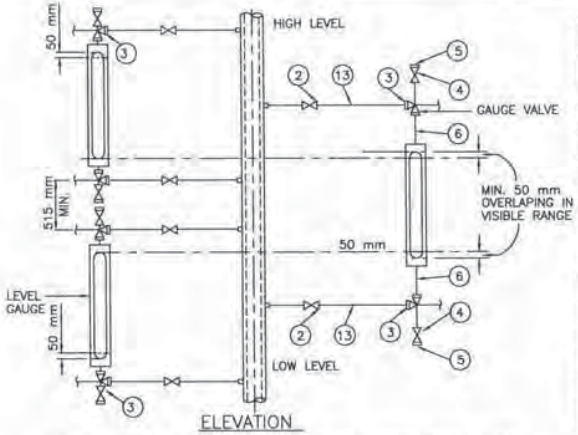

ELEVATION

LOCAL LEVEL INDICATION USING MULTIPLE GAUGES FOR INCREASED RANGE NOT COVERED IN A SINGLE UNIT

LIST OF MATERIALS

ITEM NO.	DESCRIPTION
1.	3/4"/1" NPS SCH.40/80/160/P91 (AS PER PROCESS REQUIREMENT) CARBON /ALLOY STEEL PIPE.
2.	3/4" SW GLOBE VALVE.
3.	3/4" SW UNION.
4.	3/4" NPT GLOBE VALVE.
5.	3/4" NPT (M) CAP.
6.	3/4" NPT (F) UNION CONNECTION.
7.	1" SW EQUAL UNION.
8.	1" x 1/2" SW REDUCING INSERT.
9.	1" SW EQUAL TEE.
10.	1/2" SW GLOBE VALVE.
11.	1/2" NPS SWx1/2" NPT(M) CS/AS NIPPLE.
12.	1/2" NPT (F) CAP
13.	3/4"x1/2" NPS SCH.40/80 CS/AS PIPE.
14.	1/2" NPS SCH.80/160 CS/AS NIPPLE.
15.	1" SW GLOBE VALVE.

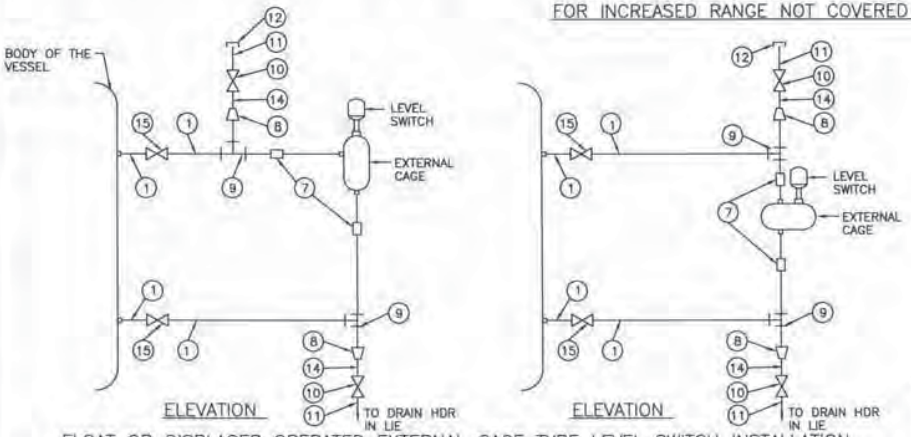

ELEVATION ELEVATION

FLOAT OR DISPLACER OPERATED EXTERNAL CAGE TYPE LEVEL SWITCH INSTALLATION

NOTES:-

1. FOR LEVEL GAUGE 3/4" AND FOR LEVEL SWITCH 1' PROCESS CONNECTION SHALL BE PROVIDED.
2. NOTES UNDER DRG. NO. 0000-999-POI-A-023 (WHICHEVER ARE RELEVENT).

FOR TENDER PURPOSE ONLY

एन टी पी सी NTPC

N T P C LIMITED
(A GOVERNMENT OF INDIA ENTERPRISE)
ENGINEERING DIVISION

PROJECT: TYPICAL THERMAL POWER PROJECT

TITLE: INSTRUMENT INSTALLATION DIAGRAM (LEVEL GAUGE & SWITCHES)

REV.NO.	DESCRIPTION	DRAWN	DESIGN	CHKD.	M	E	C	C&I	ARCH.	APPD	DATE
A	FIRST ISSUE							T.G.			21.08.12

CLEARED BY

SIZE	SCALE	DRG. NO.	REV. NO.
A3	N.T.S.	0000-999-POI-A-031	A

This document is the property of NATIONAL THERMAL POWER CORPORATION LTD. No part of this document will be reproduced by any means without the written permission.

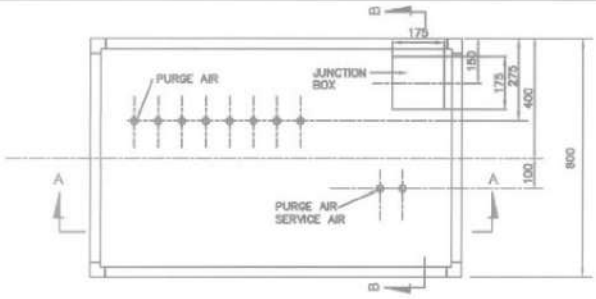

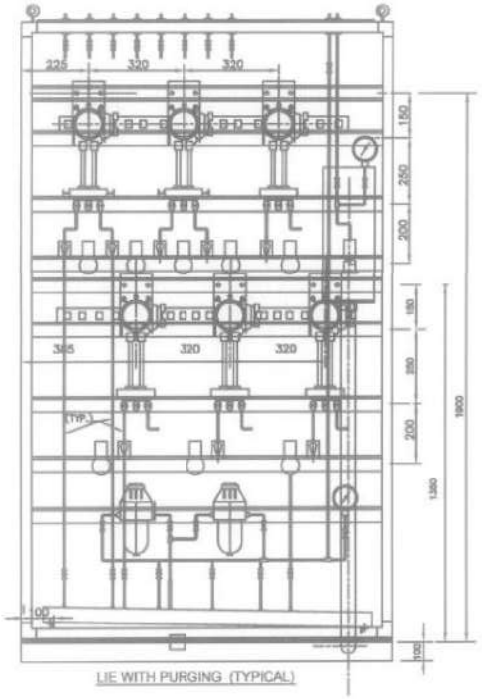

LIE WITH PURGING (TYPICAL)

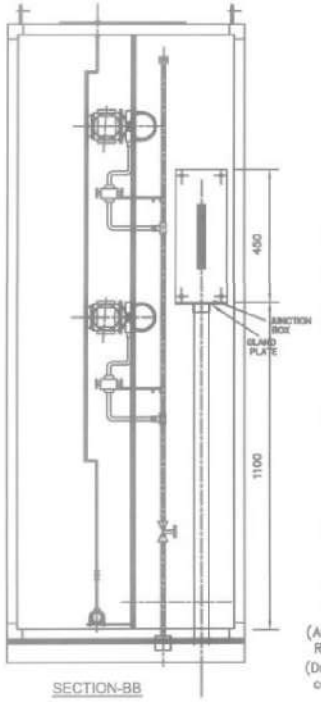

SECTION-BB

LIST OF MATERIALS

ITEM NO.	DESCRIPTION
1.	ISOLATION VALVE(gate/globe). SS.
2.	SEAMLESS SS PIPE.
3.	AIR FILTER REGULATOR.
6.	INST. AIR HEADER SS.
10.	COMP. NEEDLE VALVE SS.
11.	AIR PURGE SET.
12.	COMP VALVE SS.
13.	PLUG SS.
15.	TUBE SS CONNECTOR.
16.	TUBE COMP. EQUAL TEE UNION.
24.	BULKHEAD-SS SUITABLE FOR GI PIPE CONNECTION
25.	SEAMLESS TUBE SS.
27.	BRANCH TEE SS.
28.	PR. GAUGE.
30.	NYLON FLEX. HOSE BRAIDED WITH SS WIRE.
31.	HOSE BARBED CONN. SS.
33.	QUICK DISCONNECT SS (PURGE AIR CONNECTION TO INSTRUMENT SOURCE END).

LIST OF MATERIALS

ITEM NO.	DESCRIPTION
14.	SW GLOBE VALVE.
17.	SW EQUAL TEE
18.	S.S. NIPPLE
19.	5 VALVE MANIFOLD
20.	SW HALF COUPLET CS
21.	PIPE x TUBE UNION
22.	SUITABLE ADAPTER
23.	SS TUBE

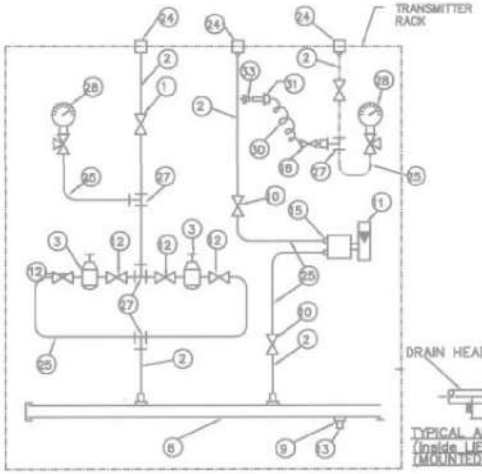

TYPICAL PURGE AIR CONNECTION INSIDE THE INST. ENCLOSURE

(APPLICABLE FOR MILL, AIR & FLUE GAS SERVICE INSTRUMENTS REQUIRING PURGE AIR)

(Drain Header of each LIE/LIR shall be connected to nearest plant drain)

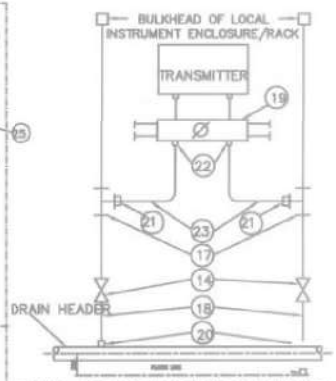

TYPICAL ARRANGEMENT OF DP TRANSMITTER (Inside LIE/LIR) (MOUNTED BELOW INSTRUMENT SOURCE POINT)

FOR TENDER PURPOSE ONLY

NTPC LIMITED
(A GOVERNMENT OF INDIA ENTERPRISE)
ENGINEERING DIVISION

PROJECT: TYPICAL THERMAL POWER PROJECT (TURNKEY EPC PACKAGE)

TITLE: TYPICAL GA OF LOCAL INSTRUMENT ENCLOSURE, PURGING SCHEME, DP TRANSMITTER

REV.NO.	DESCRIPTION	DRAWN	DESIGN	CHKD.	M	E	C	GM	ARCH.	APPD	DATE
A	FIRST ISSUE										02.08.11

CLEARED BY

SIZE	SCALE	DRG. NO.	REV. NO.
A2	N.T.S.	0000-999-POI-A-036	A

This document is the property of NATIONAL THERMAL POWER CORPORATION LTD. No part of this document will be reproduced by any means without the written permission.

`

INSTRUMENT STUB DETAILS

PRESS. MEASUREMENT

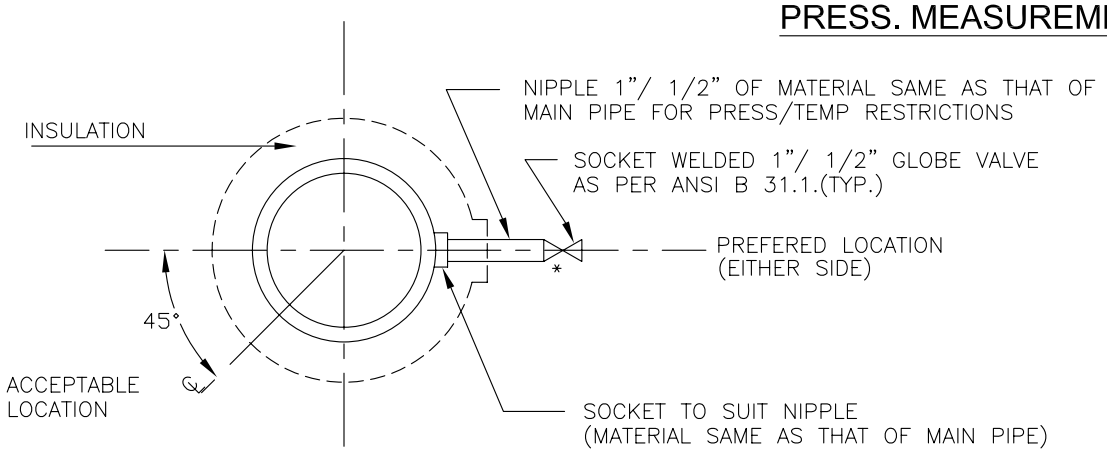

ELEVATION
LIQUID SERVICE

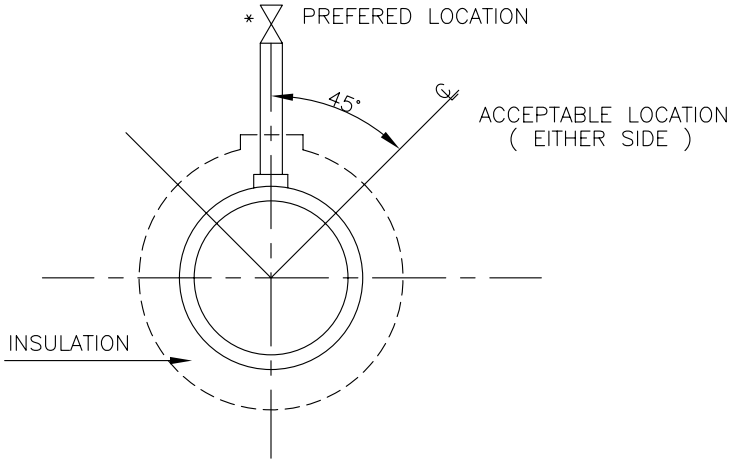

ELEVATION
STEAM SERVICE

PRESSURE CONNECTION ON HORIZONTAL PIPE

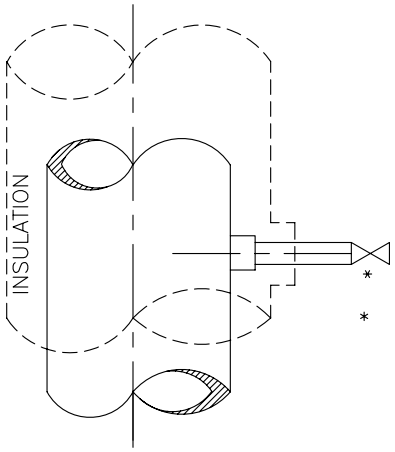

* USE DOUBLE ISOLATION VALVES FOR PRESSURE EQUAL TO OR EXCEEDING 40 Kg/Cm2.

ELEVATION
LIQUID OR STEAM SERVICE

PRESSURE CONNECTIONS ON VERTICAL PIPES

FOR TENDER PURPOSE ONLY

This document is the property of NATIONAL THERMAL POWER CORPORATION LTD.
No part of this document will be reproduced by any means without the written permission.

REV. NO.	DESCRIPTION	DRAWN	DESIGN	CHKD.	M	E	C	T.G. C&I	ARCH.	APPD.	DATE
A	FIRST ISSUE										21.08.12

CLEARED BY

एन टी पी सी NTPC

N T P C LIMITED
(A GOVERNMENT OF INDIA ENTERPRISE)
ENGINEERING DIVISION

PROJECT: TYPICALTHERMAL POWER PROJECT

TITLE: INSTRUMENT SOURCE CONNECTION DETAILS

SIZE	SCALE	DRG. NO.	REV. NO.
A4	N.T.S.	0000-999-POI-A-035 Sh-1 Of 14	A

PRESSURE MEASUREMENT

(SYSTEM PR.>40Kg/Sq Cm CL 9000)

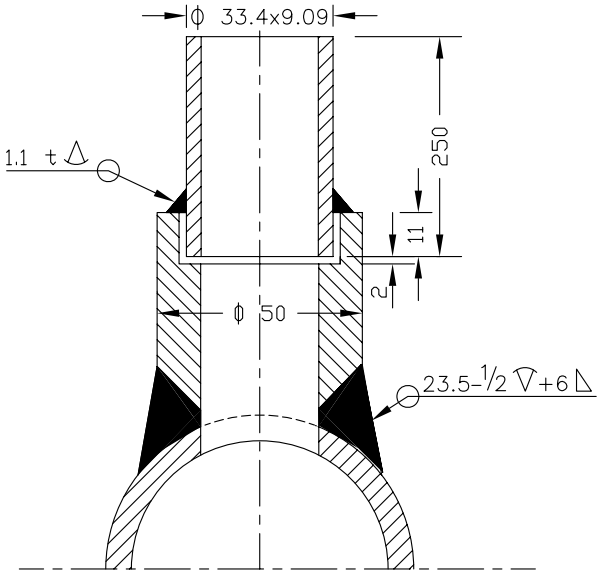

(SYSTEM PR.>40Kg/Sq Cm CL 6000)

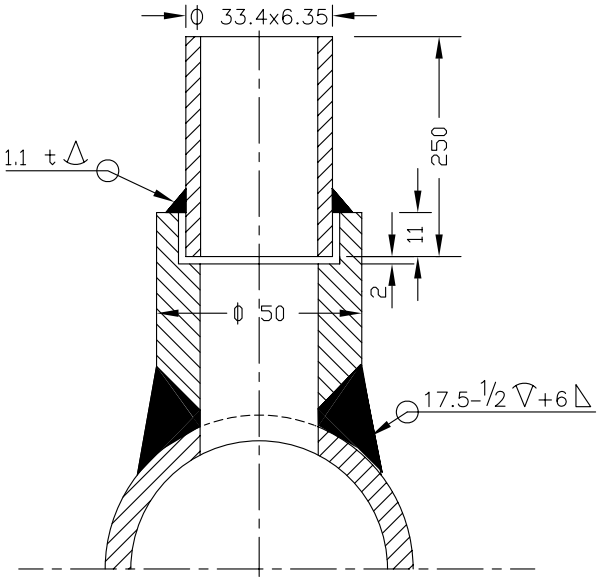

(SYSTEM PR. <40Kg/Sq cm Nb 25 CL 3000)

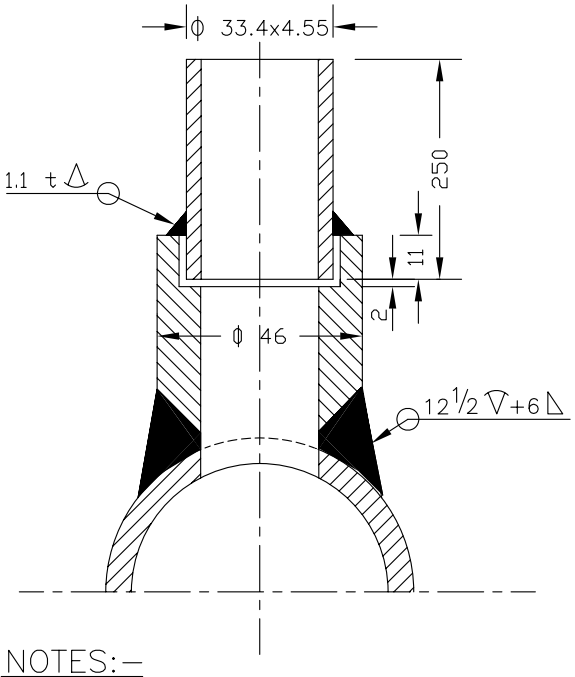

(SYSTEM PR. <40Kg/Sq cm Nb 15 CL 3000)

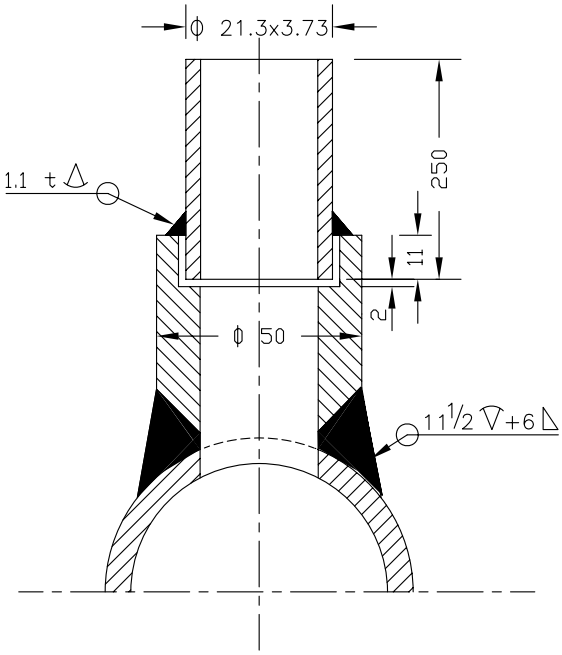

NOTES:–

1. MATERIAL OF THE BOSS AND NIPPLE SHALL BE THE SAME AS THE PIPE INTO WHICH IT IS WELDED AND CONFIRM TO ANSI B 16.11.
2. THE LENGTH OF THE NIPPLE SHOULD BE 250mm.
3. THE OTHER END OF THE NIPPLE SHALL BE SOCKET WELDED WITH 1" GLOBE VALVE OF MATERIAL AS PER ANSI B 16.1.
4. TWO ISOLATED VALVES ARE TO BE USED FOR PRESSURE = >40 Kg/Cm2.
5. EDGE HOLE MUST BE CLEAN AND SQUARE OR ROUNDED SLIGHTLY (1/64" RADIUS) FREE FROM BURRS, WIRE EDGES OR OTHER IRREGULARITIES.
6. ORIENTATION OF TAP WILL BE VARY WITH TYPE OF PROCESS FLUID AND NATURE OF RUN OF THE PIPE.
7. ACTIVITIES TO BE COMPLETED AT THE SHOP, WELD THE COUPLING (OR BOSS) ON THE PIPE AND DRILL PRESSURE CONNECTION HOLE (SAME AS I D OF NIPPLE) IN THE PIPE IN ALLIGNMENT WITH HOLE IN THE COUPLING.
8. ALL DIMENSIONS ARE IN mm UNLESS OTHERWISE STATED.

FOR TENDER PURPOSE ONLY

This document is the property of NATIONAL THERMAL POWER CORPORATION LTD.
No part of this document will be reproduced by any means without the written permission.

REV. NO.	DESCRIPTION	DRAWN	DESIGN	CHKD.	M	E	C	T.G. C&I	ARCH.	APPD.	DATE
A	FIRST ISSUE										21.08.12

CLEARED BY

एन टी पी सी NTPC

N T P C LIMITED
(A GOVERNMENT OF INDIA ENTERPRISE)
ENGINEERING DIVISION

PROJECT: TYPICALTHERMAL POWER PROJECT

TITLE: INSTRUMENT SOURCE CONNECTION DETAILS

SIZE	SCALE	DRG. NO.	REV. NO.
A4	N.T.S.	0000-999-POI-A-035 Sh-2 Of 14	A

PRESS. MEASUREMENT

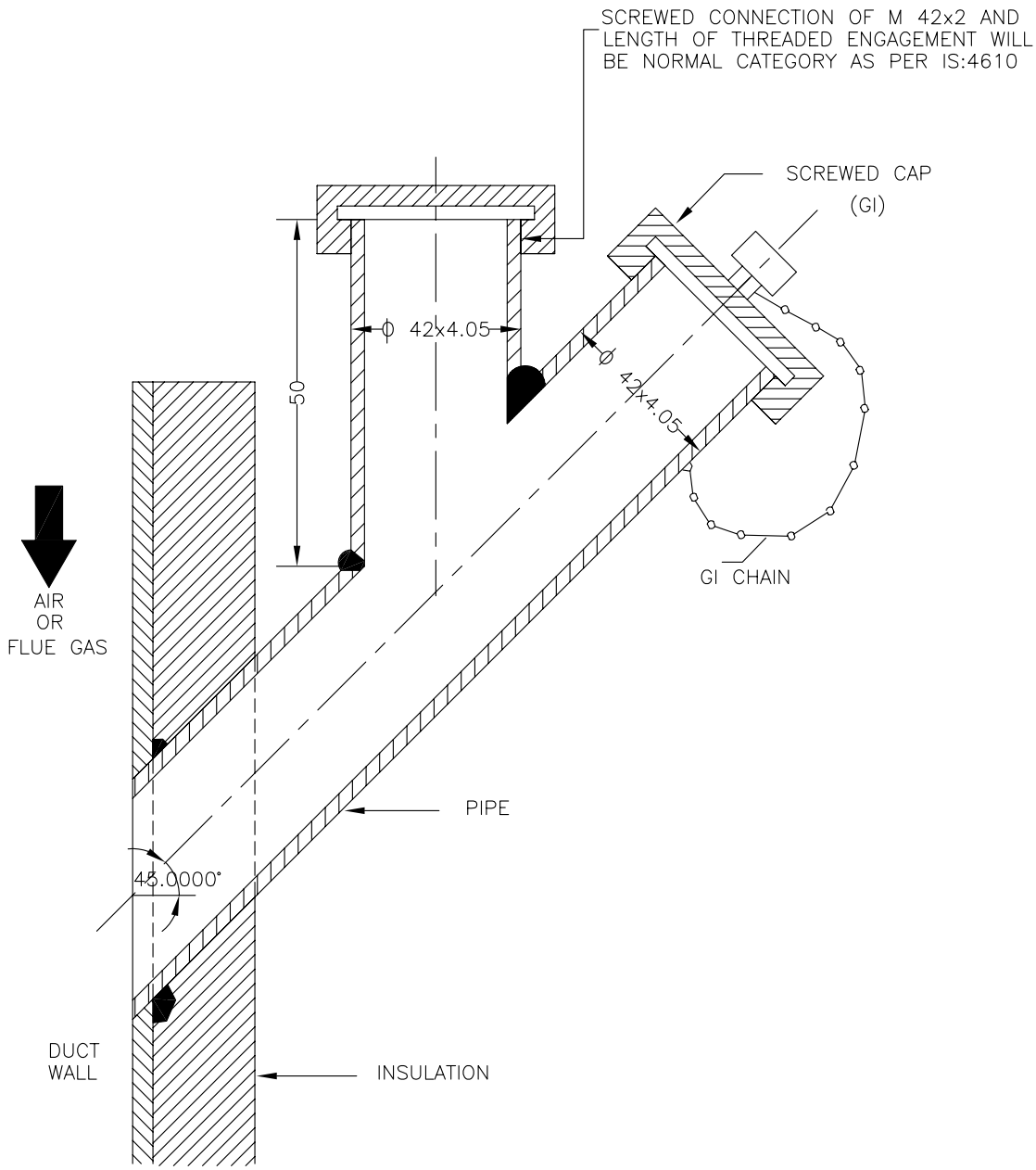

NOTES:–

1. THIS TYPE OF PRESSURE CONNECTON SHALL BE PROVIDED FOR PRESSURE MEASUREMENTS IN AIR AND FLUE GAS DUCT/FURNACE.
2. DIMENSIONS ARE INDICATIVE ONLY.

FOR TENDER PURPOSE ONLY

This document is the property of NATIONAL THERMAL POWER CORPORATION LTD.
No part of this document will be reproduced by any means without the written permission.

REV. NO.	DESCRIPTION	DRAWN	DESIGN	CHKD.	M	E	C	T.G. C&I	ARCH.	APPD.	DATE
A	FIRST ISSUE										21.08.12

CLEARED BY

एन टी पी सी NTPC

N T P C LIMITED
(A GOVERNMENT OF INDIA ENTERPRISE)
ENGINEERING DIVISION

PROJECT: TYPICALTHERMAL POWER PROJECT

TITLE: INSTRUMENT SOURCE CONNECTION DETAILS

SIZE	SCALE	DRG. NO.	REV. NO.
A4	N.T.S.	0000-999-POI-A-035 Sh-3 Of 14	A

PROCESS CONNECTION AND PIPING

1.01.01 **IMPULSE PIPING, TUBING, FITTINGS, VALVES AND VALVE MANIFOLDS**

1.01.02 All impulse pipes shall be of seamless type conforming to ANSI B36.10 for schedule numbers. The size of impulse pipe shall be ½" for Steam & Water Application and ¾" for Air & Flue Gas applications. The rating of material of impulse pipes, tubes, fittings, valves and their installation thereof shall conform to the latest edition of standards as per following table:

Impulse Pipes, Tubes (Material, Rating)	ANSI B31.1, ANSI B31.1a, ANSI/ISA 77.70
Valves (Material, Pr. Class, Size)	ASTM A182/ASTM A105 as per ASME 16.34
Fittings (Size, Rating, Material)	ANSI B31.1, ANSI B31.1a, ASME B16.11-2009
Installation Schemes	BS 6739-2009, ANSI/ISA 77.70

Stainless steel tube shall be provided inside enclosures & racks from tee connection to valve manifold and then to instrument. The source shut-off (primary process root valve) and blow down valve shall be of 1/2 inch size globe valve type for all applications except for air and flue gas service wherein no source shut-off valves are to be provided. Two root valves are to be used wherever pressure is more than 40 Kg/cm^2 or Temp>280 ºC. The end connections of valves shall be of socket welded type. Typical installation scheme of DP Transmitter (inside LIE/LIR) mounted below instrument source point is indicated in Drg. No. 0000-999-POI-A-036. Same scheme with necessary changes shall be applied for other instruments.

1.01.03 The valve manifolds of 316 SS with pressure rating suitable for intended application shall be provided as given below:

Manifold	Application/Measurement
2 Valve	Pressure measurements using pressure transmitters/pressure switches
3 Valve	Pressure measurements using differential pressure transmitter/ switches
5 Valve	Differential Pressure, Flow and Level Measurements

For Pr./D.P gauges, two-way globe/gate valve shall be provided on each impulse line to the instrument in Fluid/Air & Flue Gas applications respectively .

2.00.00 **AIR SUPPLY PIPING**

2.01.01 All pneumatic piping, fittings, valves, air filter cum regulator, purge rotameter and other accessories required for instrument air for the various pneumatic devices/ instruments shall be provided. This will include as a minimum air supply to pneumatically operated control valves, actuators, instruments, continuous and intermittent purging requirements etc.

2.02.00 Instrument air and Service air supply shall be provided for continuous and intermittent purging respectively for all transmitters of mill, dirty air and flue gas applications. Purging Scheme shall be as per Drg. No. 0000-999-POI-A-036.

2.03.00 The Contractor shall also provide SS Tubing and associated fittings (screwed type) of suitable sizes for all pneumatic equipments/actuators (including supply air, signal air and output to actuators) conforming to ANSI 31.1 and 31.3 standard. All other air supply lines shall be of mild steel hot dipped galvanized inside and outside as per IS-1239, heavy duty

with threaded ends. Fittings for air supply line shall be of forged carbon steel A234 Gr. WPB galvanized inside and outside, screwed as per ASA B2.1. Dimensions of fittings shall be as per ASA B16.11 of rating 3000 lbs. Air supply piping shall be adequately sloped to prevent accumulation of condensed water within the pipe. The air supply headers, sub-headers and branch pipes shall be supported properly by clamps or supports.

2.04.00 The instrument/service air supply to each equipment/devices requiring air supply shall be provided by a well designed air distribution scheme comprising of 2" GI Pipe Header feeding 1" GI Pipe sub-header feeding ½" pipe at each equipment/device. Instrument air filters cum regulator set with mounting accessories shall be provided for each pneumatic device requiring air supply except for Ash Handling System wherein it shall be provided on instrument air header at each location.

2.05.00 All the isolation valves in the air supply line shall be gate valves as per ASTM B62 inside screw rising stem, screwed female ends as per ASA B2.1. Valve bonnet shall be union type & trim material shall be stainless steel, body rating 150 pounds ASA. The valve sizes shall be ½ inch to 2 inch.

2.06.00 Instrument air filters cum regulator set with mounting accessories shall be provided for pneumatic device requiring air supply. The filter regulators shall be suitable for 10-kg/ sq.cm max. Inlet pressure. The filter shall be of size 5 microns and of material sintered bronze. The air set shall have 2-inch size pressure gauge and built in filter housing blowdown valve. The end connection shall be as per the requirement to be finalized during detailed engineering.

3.00.00 **INSTALLATION AND ROUTING**

3.01.01 All instrument piping, tubing and its accessories shall be supported in a safe manner to prevent excessive vibrations and anchored sufficiently to prevent undue strain on connected equipment. Impulse piping shall be supported at an interval not exceeding 1.5 meters. The slope of the impulse pipe form the process connection to the instrument shall be as per ANSI/ISA 77.70 latest edition and BS 6739-2009. All impulse piping shall be installed to permit free movement due to thermal expansion. Wherever required expansion loops shall be provided.

Condensate pots shall be provided for all level measurements in steam and water services, all flow measurement in steam services and for flow measurements in water services above 120 Deg. C. Colour coding of all impulse pipes shall be done by the Contractor in line with the colour coding being followed for the parent pipes.

4.00.00 **SHOP AND SITE TESTS**

4.01.01 The equipment and work performed as per this Sub-section shall be subject to shop and site test as per requirements of Sub-section-IIIE-04 (Quality Assurance & Inspection) other applicable clauses of this Sub-section and Employer approved quality assurance plan.

4.01.02 Hydrostatic and Pneumatic leakage tests shall be performed on all pipes, tubing and systems and shall conform to ANSI B31.1.

5.00.00 **LOCAL INSTRUMENT ENCLOSURE AND RACKS**

All transmitters, switches etc. for FGD system and other system being provided under the contract shall be suitably grouped together and mounted inside (i) local instruments enclosures in case of open areas of the plant and (ii) In local instrument racks in case of covered areas. The GA of LIE with purging indicated in the Drg. No. 0000-999-POI-A-036 is to be followed by contractor. The GA of LIR shall be similar to LIE except for front/rear doors and side panels.

CLAUSE NO.	TECHNICAL REQUIREMENTS
	The internal layout shall be such that the impulse piping/ blow down lines are accessible from back side of the enclosure / rack and the transmitters etc. are accessible from front side for easy maintenance. Bulkheads, especially designed to provide isolation from process line vibration shall be installed on instrument enclosures/racks to meet the process sensing line connection requirement. Vibration dampeners shall be installed for each enclosure / rack. The Degree of Protection of LIE and JB of LIE/LIR shall be IP-55. The enclosures shall be constructed of 3 mm sheet plate and shall be of modular construction with one or more modules and two end assemblies bolted together to form an enclosure. Double inter locking doors shall be provided. The doors shall be the three-point locking type constructed of not less than 1.6 mm thick steel. Doors shall have concealed quick removal type pinned hinges and locking handles. Door locks shall accept the same key. The instrument racks shall be free standing type constructed of suitable 5 mm thick channel frame of steel and shall be provided with a canopy to protect the equipment mounted in racks from falling objects, water etc. The canopy shall not be less than 3 mm thick steel, and extended beyond the ends of the rack. Enclosures/Racks shall be reinforced as required to ensure true surface and to provide adequate support for instruments and equipment mounted therein. Centre posts or any member which would reduce access shall not be provided. Contractor shall provide not more than three variants for LIE/LIR with respect to max. no. transmitters mounted in each LIE/LIR.
5.01.00	ENCLOSURE / RACKS FOR DUAL I/P TEMPERATURE TRANSMITTERS All Dual Input temperature transmitters for FGD system and other system being provided under the contract shall be suitably grouped together and mounted inside (i) Enclosures in case of open areas of the plant and (ii) Racks in case of covered areas. Integral JB shall be provided with each Enclosure and Rack. The internal layout shall be such that the transmitters are accessible from both front and back side of the enclosure / rack for easy maintenance. Enclosure/ Racks shall be of robust and rugged design. Vibration dampeners shall be installed for each enclosure / rack. The Degree of Protection of Enclosure and JB shall be IP-55. Enclosure and Racks shall be free standing type. Enclosures/Racks shall be reinforced as required to ensure true surface and to provide adequate support for instruments and equipment mounted therein. Contractor shall provide not more than five variants for Enclosure/ Rack with respect to max. no. transmitters mounted in each Enclosure/ Rack. However, the maximum number of Transmitters that can be grouped in one Enclosure/ Rack shall be decided during detail Engineering.

52.04.00 **Equipment Installation**

(a.) **General Requirements**

(1.) The Contractor shall furnish all construction materials, tools and equipment and shall perform all work required for complete installation of all control and instrument equipment furnished under this specification.

(2.) Contractor shall prepare detailed installation drawings for each equipment furnished under this specification for Employer’s approval. Installation of all equipment/systems furnished by this specification shall be as per Employer's approval.

(3.) Erection procedures not specified herein shall be in accordance with the recommendations of the equipment manufacturers. The procedures shall be acceptable to the Employer.

(4.) The Contractor shall coordinate his work with other suppliers where their instruments and devices are to be installed under specifications.

(b.) **Installation Materials**

All materials required for installation, testing and commissioning of the equipment shall be furnished by the Contractor.

(c.) **Regulatory Requirements**

All installation procedures shall confirm with the accepted good engineering practice and with all applicable governmental laws, regulations and codes.

(d.) **Cleaning**

All equipment shall be cleaned of all sand, dirt and other foreign materials immediately after removal from storage and before the equipment is brought inside the power plant building or to other installation sites. All piping and tubes shall be air blown.

(e.) **Equipment Assembly**

Equipment installed under these specifications shall be assembled if shipped unassembled. The equipment shall be dismantled and reassembled as

required to perform the installation and commissioning work described in these specifications.

(f.) **Equipment Setting**

Field mounted instruments and accessories shall be bracket or sub panel mounted on the nearest suitable firm steel work or masonry. The brackets, stands, supports and other miscellaneous hardware required for mounting instruments and accessories such as receiver gauge, air set, valve manifold, purge-meter etc. shall be furnished and installed. No field mounted instruments shall be installed such that it depends for support or rigidity on the impulse piping or on electrical connection to it.

Indicating type field mounted instruments shall be installed in such a way that centre of indicating dial shall be about 1600-1800mm from operating floor level. Non-indicating type field instruments shall be installed such that operating handle of manifold block / isolating cock comes within 1600 mm from operating floor level.

(g.) **Free-Standing Equipment**

Free-standing Cabinets shall be attached to the floor, concrete equipment bases or supporting steel as indicated on the manufacturer's drawings and the Employer's Plant Arrangement Drawings. The cabinets shall be shimmed for proper alignment before bolting them to the floor. Adjacent enclosures shall be shimmed to maintain mutually level appearance before they are attached to floor. Vibration dampening mounts shall be installed between supporting structures and panels when specified.

(h.) **Non-free Standing Equipment**

(1.) Non-free standing local enclosures and cabinets shall be mounted in accessible locations on columns, walls, or stands in locations as indicated on the Employer's Plant Arrangement Drawings. Bracket and stands shall be fabricated as required to install the local enclosures and cabinets in a workman like manner.

(2.) Rough edges and welds on all fabricated supports shall be ground smooth. The supports shall be finished with two coats of primer and two coats of paint as specified in this part.

(i.) **Equipment Location**

(1.) All individual items of equipment not located in cabinets or on panels and racks are located approximately according to the floor elevation and the nearest building column designated by the Employer.

(2.) Solenoid valves not located in enclosures or mounted on valves shall be mounted in easily accessible protected locations near the components with which they are associated.

(3.) All brackets, stands, supports and other miscellaneous hardware required for mounting devices shall be furnished and installed.

(4.) Thermometers shall be installed in the process lines and ducts as required and adjusted for ease in reading.

(5.) Permanent temperature wells on the main steam, hot reheat and cold reheat piping shall not be installed until steam blowing has been completed. Temporary temperature wells shall be installed in the main and reheat steam piping during steam blow and discarded after completion.

(6.) Any required adapting hardware such as pipe bushings, nipples, drilled caps and the like shall be provided for complete installation of control devices into process connections.

For location of C&I related equipment/devices, the requirement specified elsewhere in the technical specification may be referred.

(j.) **Installation of Field Mounted Instruments and Devices**

The Contractor shall submit installation drawings for all field mounted equipment furnished under this specification for Employer's approval. These drawings shall meet the requirements of this specification, installation drawings, applicable codes and standards and recommendations of manufacturers of instruments/devices. All installation work under this specification shall be strictly as per installation drawings approved by the Employer during detailed engineering stage.

In addition to above relevant Portion as specified elsewhere in technical specification may be referred.

(k.) **Piping Connections**

(1.) All equipment having piping connections shall be levelled, aligned and wedged in place but shall not be grouted or bolted prior to the initial fitting and alignment of connecting piping. All equipment shall, however, be grouted or bolted to its foundation prior to final bolting or welding of the connection piping.

(2.) All flanged joints shall be checked and retightened after approximately 10 days of operation at normal operating temperature.

(l.) **Equipment Checkout**

(1.) All equipment shall be cleaned after installation. Equipment subject to pressure differentials shall be checked for leakage.

(2.) After erection, all equipment having moving parts, having electrical apparatus, or subject to pressure differentials shall be trial-operated.

(m.) **Defects**

(1.) All defects in erection shall be corrected to the satisfaction of the Employer and the Project Manager. The dismantling and reassembly of Contractor furnished equipment to remove defective parts, replace parts, or make adjustments shall be included as a part of the work under these specifications.

(2.) The removal of control and instrument equipment in order to allow bench calibration, if required, and the re-installation of the said equipment after calibration shall also be included as a part of the work under these specifications.

(n.) **Equipment Protection**

(1.) All equipment to be erected under these specifications shall be protected from damage of any kind from the time of contract award until commissioning of each unit.

(2.) The equipment shall be protected during storage as described herein.

(3.) Equipment shall be protected from weld spatter during construction.

(4.) Suitable guards shall be provided for protection of personnel on all exposed rotating or moving machine parts. All such guards with necessary spares and accessories shall be designed for easy removal and maintenance.

(5.) Equipment having glass components such as gauges, or equipment having other easily breakable components, shall be protected during the construction period with plywood enclosures or other suitable means. Broken, stolen, or lost components shall be replaced by the Contractor.

(6.) Machine finished surfaces, polished surfaces, or other bare metal surfaces which are not to be painted, such as machinery shafts and couplings shall be provided temporary protection during storage and constructional periods by a coating of a suitable non- drying, oily type, rust preventive compound.

`

SIGNAL EXCHANGE BETWEEN DRIVES & DCS

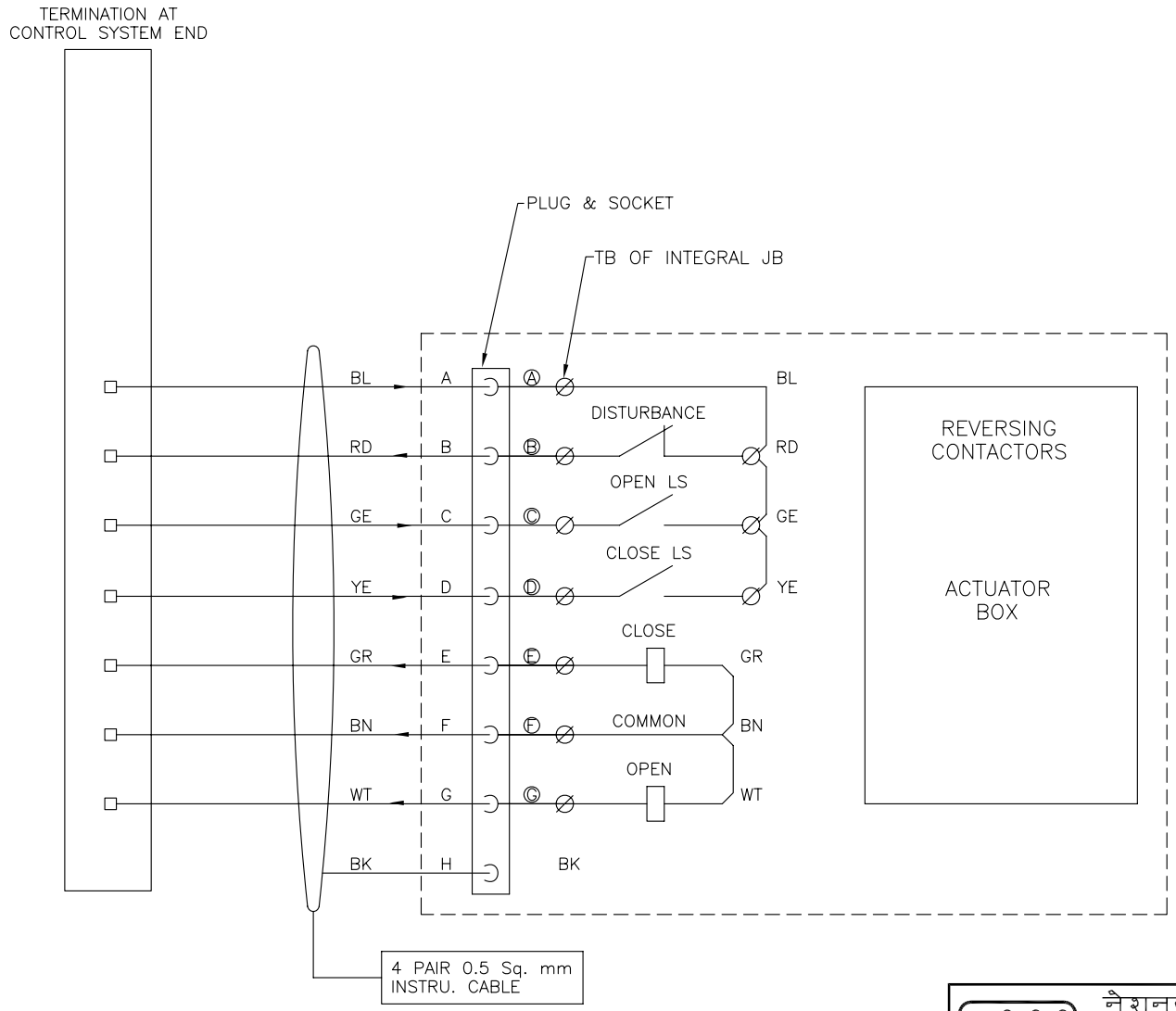

FOR TENDER PURPOSE ONLY

एन टी पी सी
NTPC

नैशनल थर्मल पावर कारपोरेशन लिमिटेड
National Thermal Power Corporation Ltd.
(A GOVERNMENT OF INDIA ENTERPRISE)
ENGINEERING DIVISION

PROJECT: TYPICAL THERMAL POWER PROJECT

TITLE: INTERFACING OF ACTUATORS

REV.NO.	DESCRIPTION	DRAWN	DESIGN	CHKD.	M	E	C	C&I	ARCH.	APPD	DATE
D	FIRST ISSUE										21.08.12

CLEARED BY

SIZE	SCALE	DRG. NO.	REV. NO.
A3	N.T.S.	0000-999-POI-A-063	D

This document is the property of NATIONAL THERMAL POWER CORPORATION LTD.
No part of this document will be reproduced by any means without the written permission.

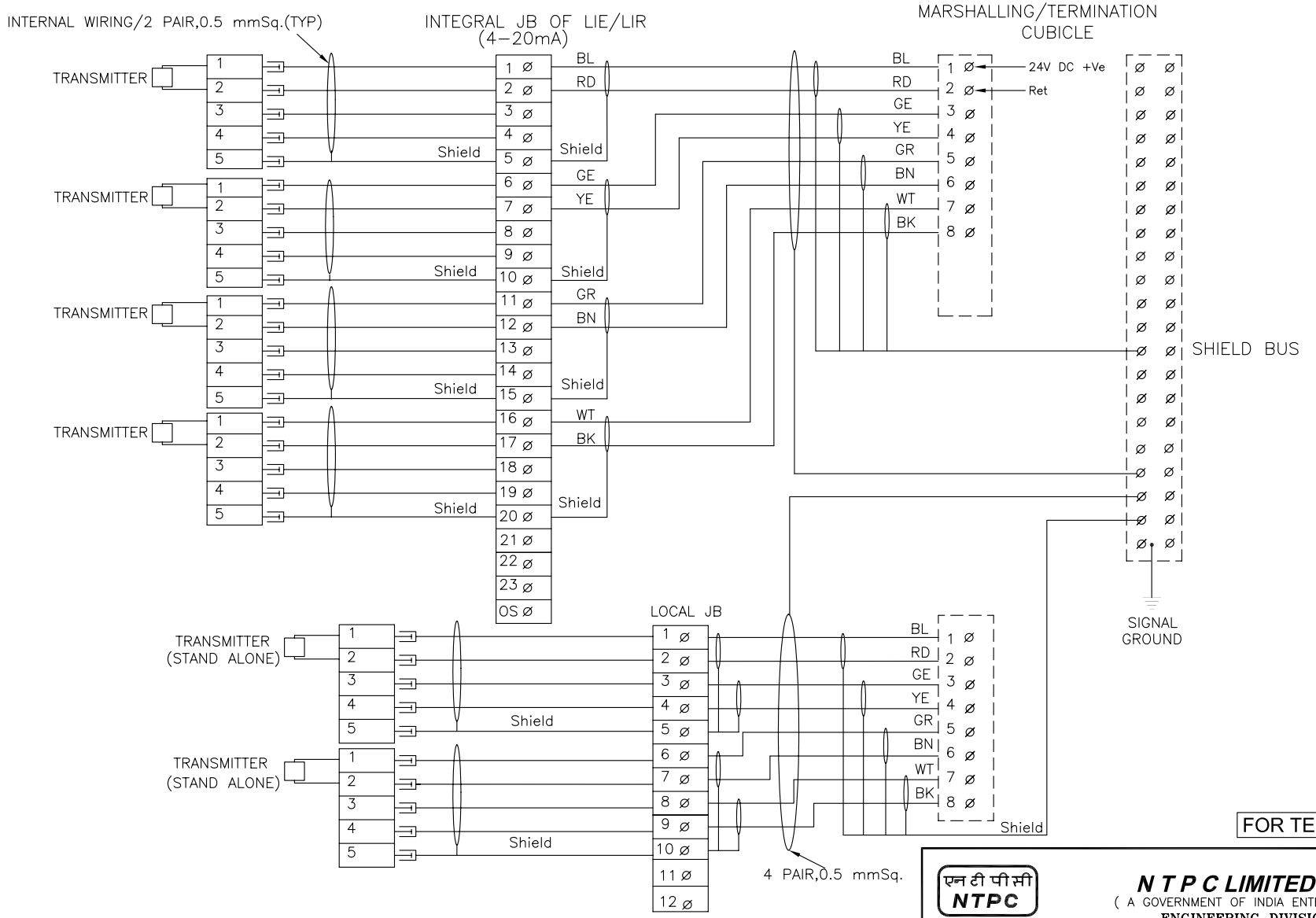

FOR TENDER PURPOSE ONLY

This document is the property of NATIONAL THERMAL POWER CORPORATION LTD.
No part of this document will be reproduced by any means without the written permission.

एन टी पी सी NTPC

N T P C LIMITED
(A GOVERNMENT OF INDIA ENTERPRISE)
ENGINEERING DIVISION

PROJECT: TYPICAL THERMAL POWER PROJECT

TITLE: INTERFACING OF FIELD INSTRUMENTS 4-20mA

REV.NO.	DESCRIPTION	DRAWN	DESIGN	CHKD.	M	E	C	C&I	ARCH.	APPD	DATE
B	INTERNAL WIRING FOR LIE/LIR MOUNTED SHOWN WIRING OF STAND ALONE TXTR SHOWN										21.08.12
A	FIRST ISSUE										12.1.05

CLEARED BY

SIZE	SCALE	DRG. NO.	REV. NO.
A3	NTS	0000-999-POI-A-065 SH 04 OF 15	B

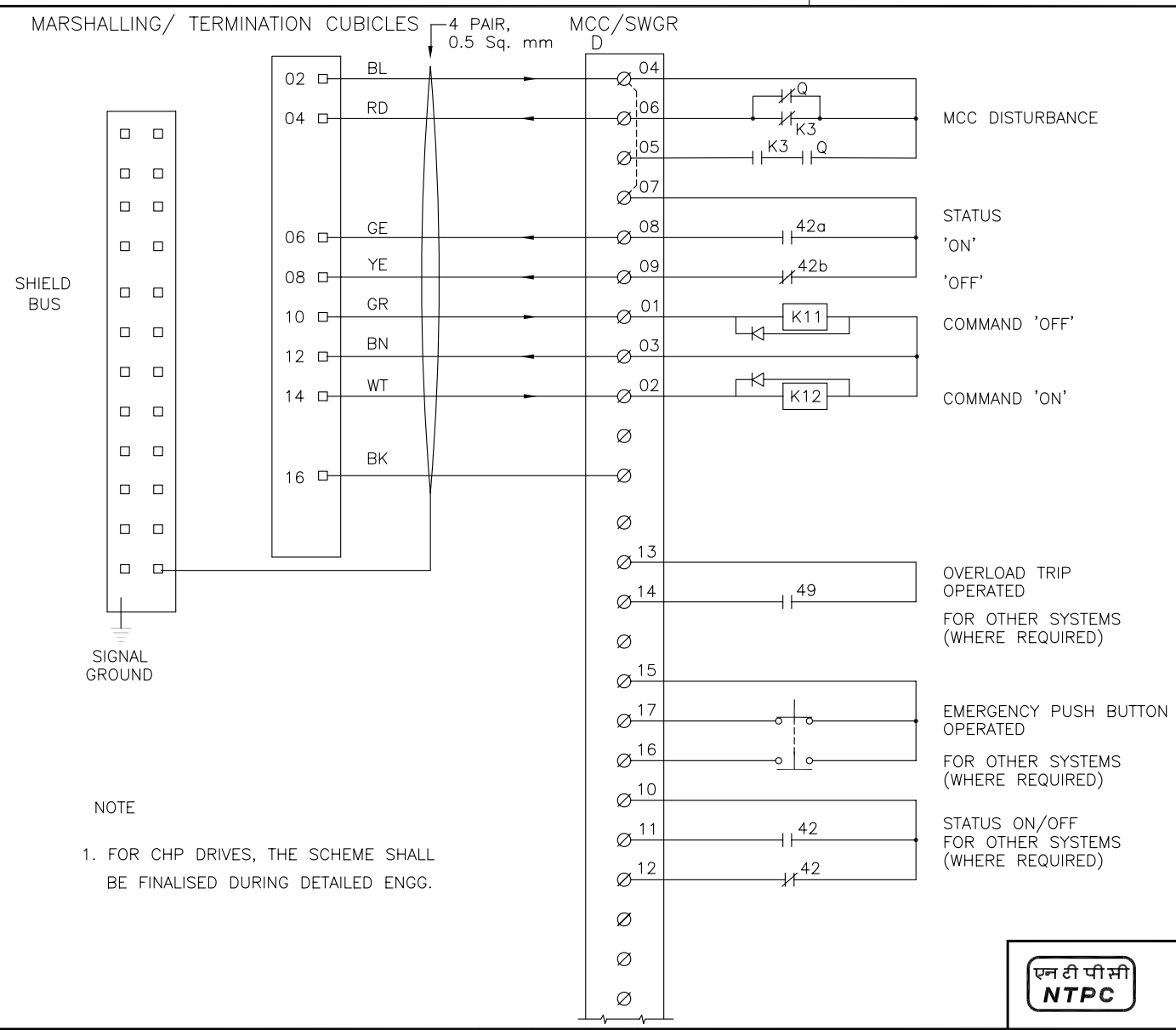

NOTE

1. FOR CHP DRIVES, THE SCHEME SHALL BE FINALISED DURING DETAILED ENGG.

FOR TENDER PURPOSE ONLY

एन टी पी सी NTPC

N T P C LIMITED
(A GOVERNMENT OF INDIA ENTERPRISE)
ENGINEERING DIVISION

PROJECT: TYPICAL THERMAL POWER PROJECT

TITLE: INTERFACING OF FIELD INSTRUMENTS
INTERFACE OF DDCMIS WITH MCC/SWGR/ACTUATOR
(LT MOTORS)

REV.NO.	DESCRIPTION	DRAWN	DESIGN	CHKD.	M	E	C	C&I	ARCH.	APPD	DATE
A	FIRST ISSUE										21.08.12

CLEARED BY

SIZE	SCALE	DRG. NO.	REV. NO.
A3	NTS	0000-999-POI-A-065 SH 05 OF 15	A

This document is the property of NATIONAL THERMAL POWER CORPORATION LTD.
No part of this document will be reproduced by any means without the written permission.

`

QUALITY ASSURANCE FOR INSTRUMENTS & LCP AND TYPE TEST REQUIREMENTS

MEASURING INSTRUMENTS (PRIMARY AND SECONDARY)

TESTS / ITEMS	Dimensions (R)	Make, Model, Type, Rating (R)	Process / Electrical connection (R)	Calibration (R)	Test as per standard(R)	Insulation Resistance (R)	IBR Certification (if applicable)(R)	Hydro Test(R)	Material Test certificate ®
1. PR Gauge (IS-3624)	Y	Y	Y	Y	Y				
2. Temp. Gauge (BS-5235)	Y	Y	Y	Y	Y				
3. Pr./D.P.Switch(BS-6134)	Y	Y	Y	Y	Y	Y			
4. Electronic Transmitter(IEC-60770)	Y	Y	Y	Y	Y	Y			
5. Temp. Switch	Y	Y	Y	Y	Y	Y			
6. Recorder(IS-9319/ANSI C-39.4)	Y	Y	Y	Y	Y	Y			
7. Vertical indicators	Y	Y	Y	Y		Y			
8. Digital Indicators	Y	Y	Y	Y		Y			
9. Integrators	Y	Y	Y	Y					
10. Electrical Metering Instrument (IS-1248)	Y	Y	Y	Y	Y	Y			
11. Transducer (IEC-688)	Y	Y	Y	Y	Y	Y			
12. Thermocouples (IEC – 754 / ANSI-MC-96.1)	Y	Y	Y	Y	Y	Y			
13. RTD(IEC-751)	Y	Y	Y	Y	Y	Y			
14. Thermowell	Y		Y				Y	Y	Y

R-Routine Test A- Acceptance Test Y – Test applicable

: Note: 1) This is an indicative list of tests/checks. The manufacturer is to furnish a detailed quality plan indicating the Practices and Procedure adopted along with relevant supporting documents.

MEASURING INSTRUMENTS (PRIMARY AND SECONDARY)

TESTS / ITEMS	Dimensions (R)	Make, Model, Type, Rating (R)	Process / Electrical connection (R)	Calibration (R)	Requirement as per standard (R)	WPS approval (A)	Non-destructive testing (R)	Calculation for accuracy (R)	Insulation Resistance (R)	IBR Certification as applicable (R)	Hydro test (R)	Material test certificate (A)
15. Cold junction compensation box	Y	Y	Y	Y					Y			
16. Orifice plate(BS-1042)	Y	Y	Y	Y *	Y	Y **	Y **			Y	Y **	Y
17. Flow nozzle(BS-1042)	Y	Y	Y	Y *	Y	Y	Y			Y	Y	Y
18. Impact head type element	Y	Y	Y					Y				Y
19. Level transmitter/float type switch	Y	Y	Y	Y					Y	Y	Y	Y
20. Analysers	Y	Y	Y	Y								
21. Dust emission monitors	Y	Y	Y	Y								
*Calibration to be carried out on one flow element of each type and size if calibration carried out as type test same shall not be repeated.												
** If applicable												

R-Routine Test A- Acceptance Test Y – Test applicable

Note: 1) This is an indicative list of tests/checks. The manufacturer is to furnish a detailed quality plan indicating the Practices and Procedure adopted along with relevant supporting documents.

ELECTRICAL ACTUATOR WITH INTEGRAL STARTER

Test/Attributes Characteristics / ITEM/ COPONENT/ SUB SYSTEM ASSEMBLY/ TESTING	RPM ®	No Load Current ®	IR & HV Test®	Mounting Dimension®	All routine Test as per Standard & Specification®	Correct Phase Sequence®	Operation & Setting of limit Switch/Torque Switch®	Stall Torque/Current (A)	Hand Wheel operation/ Auto de clutch function (A)	Function of Aux. like Potentiometer, space heater, position indicator	EPT output ®	Grease leakage ®	Local/ Remote (Open-Stop-Close) Operation® Safety check (Single phasing, Phase correction, Tripping etc.) (A)
ELECTRICAL ACTUATOR WITH INTEGRAL STARTER(IS_9334)													
Motor	Y	Y	Y	Y	Y								
Final Testing	Y	Y	Y	Y	Y	Y	Y	Y	Y	Y	Y	Y	Y

Note: 1) Detailed procedure of Burn-in and Elevated Temperature test shall be as per Quality Assurance Programme in General Technical Conditions

2) This is an indicative list of tests/checks. The manufacturer is to furnish a detailed quality plan indicating the practices and procedure adopted along with relevant supporting documents.

® - Routine Test (A) - Acceptance Test Y - Test applicable

Process, Connection & piping FOR C&I SYSTEMS

TESTS / ITEMS	Visual ®	GA, BOM, Layout of component & construction feature®	Dimension ®	Paint Shade/thickness ®	Flattening, flaring, hydrotest, hardness check as per ASTM standard	Component Ratings ®	Wiring ®	Make, Model, Type, Rating®	IR & HV ®	Review of TC for instrument/devices (R)	Accessability of TBs/Devices ®	Illumination,grounding ®	Tubing ®	Leak/Hydro test(A)	Chemical/physical properties of material (A)	Proof pressure test,Dismantling & reassembly test,Hydrulic impulse and vibration test (R)	Tests as per standards & specification
Local Instrument enclosure	Y	Y	Y	Y		Y	Y	Y	Y	Y	Y	Y	Y	Y			
Local instruments racks	Y	Y	Y	Y		Y	Y	Y	Y	Y	Y	Y	Y	Y			
Junction Box	Y	Y	Y	Y *		Y		Y	Y								
Gauge Board	Y	Y	Y	Y		Y		Y		Y			Y	Y			
Impulse pipes and tubes	Y		Y		Y			Y							Y		
Socket weld fittings ANSI B-16.11	Y		Y					Y							Y		Y
Compression fittings	Y		Y					Y						Y	Y	Y	
Instrument valves & Valve manifolds	Y		Y					Y						Y	Y		
Copper tubings ASTM B75	Y							Y									Y

*-applicable for painted junction boxes.

Note: R-Routine Test A- Acceptance Test Y – Test applicable

Note: This is an indicative list of tests/checks. The manufacturer is to furnish a detailed quality plan indicating the Practices and Procedure adopted alongwith relevant supporting documents.

INSTRUMENTATION CABLE

TESTS / ITEMS	Conductor Resistance ® & (A)	High Voltage ® & (A)	Insulation Resistance ® & (A)	Constructional detail, dimensions (A)	Outer-Sheathe/core marking, end sealing (A)	Thermal Stability (A) +	Visual, Surface finish (A) +	Electrical Parameters ** (A) +	Persulphate Test (A) +	Overall/Coverage/Continuity (A)	Swidesh chimney Test (SS-4241475) (A) ++	FRLS Test * (A) ++	Tensile & Elongation before & after aging (A) ++	Vol. Resistivity. at room & Elevated Temp. (A) ++	Spark test report review ®
1. Instrument cable twisted and shielded															
Conductor(IS-8130)	Y			Y			Y								
Insulation(VDE-207)				Y	Y	Y	Y						Y		Y
Pairing/Twisting				Y	Y		Y								
Shielding				Y			Y			Y					
Drain wire	Y			Y			Y		Y	Y					
Inner Sheath				Y	Y	Y	Y					Y	Y		
Outer Sheath				Y	Y	Y	Y					Y	Y		
Over all cable	Y	Y	Y	Y	Y		Y	Y			Y			Y	
Cable Drums(IS-10418)				Y			Y								

Note : High Temp. cables shall be subjected to tests as per VDE-207(Part-6) Compensating cables shall be checked for Thermal EMF/Endurance test as per IS 8784.

Note : This is an indicative list of tests/checks. The manufacture is to furnish a detailed Quality Plan indicating his practice & Procedure along with relevant supporting documents during QP finalization for all items.

Note : ® - Routine Test A - Acceptance Test Y - Test Applicable

Note : Sampling Plan for Acceptance test shall be as per IS 8784 (As applicable)

- * FRLS Tests: Oxygen / Temp Index (ASTM D-2863), Smoke Density Rating (ASTM – D 2843), HCL Emission (IEC-754-1)
- ** Characteristic Impedance, Attenuation, Mutual Capacitance, Cross Talk (As applicable)

\+ Sample size will be One No. of each size/type per lot.

++ Sample size will be One No. sample for complete lot offered irrespective of size/type.

PEM :: C&I

STANDARD QUALITY PLAN FOR LOCAL CONTROL PANEL

STD QUALITY PLAN NO.:	**PE-QP-999-145-I056**
VOLUME	IIB
SECTION	D
REV. NO.	01 DATE: 22-02-2008
SHEET	1 OF 7

Sl. No.	Component / operation	Characteristics Checked	* Category	Type/Method of Check	Extent of Check	Reference documents	Acceptance Norms	Format of Records	Agency $ P	Agency $ W	Agency $ V	Remarks
	INCOMING											
1.0	Sheet Steel (CRCA & HR)	1. Chemical Composition	MA	Chemical analysis	Sample	IS:1079 IS:513	IS:1079 IS:513	Test Certificate	3	---	2	
		2. Bend Test	CR	Mech. test	Sample	IS:1079 IS:513	IS:1079 IS:513	Log Book	2	---	---	
		3. Surface finish	MA	Visual	100%	Factory Standard / Sample	Factory Standard / Sample	Log Book	2	---	---	
		4. Waviness	MA	Visual	100%	Factory Standard	No Waviness	Log Book	2	---	---	
		5. Thickness	MA	Measurement	100%	BHEL Spec.	BHEL Spec.	Log Book	2	---	---	
		6. Mill marking	MA	Visual	100%	Factory Standard	Factory Standard	Log Book	2	---	1	
2.0	Flats / Angles / Channels	1. Dimensions	MA	Measurement	Sample	IS:2062	IS:2062	Log Book	2	---	---	
		2. Surface Defects	MA	Visual	100%	Factory Standard / Sample	Factory Standard / Sample	Log Book	2	---	---	
		3. Straightness	MA	Measurement	100%	Factory Std.	Factory Std.	Log Book	2	---	---	
		4. Mill marking	MA	Visual	100%	IS:2062	IS:2062	Log Book	2	---	1	
3.0	Cables / Wires	1. Visual / Surface defects	MA	Visual	100%	BHEL Spec. and IS:1554 or IS:694	BHEL Spec. and IS:1554 or IS:694	Log Book	2	---	---	
		2. IR and HV	MA	Electrical	100%	BHEL Spec. and IS:1554 or IS:694	BHEL Spec. and IS:1554 or IS:694	Log Book	2	---	---	

LEGEND:
* CR - Critical characteristics
MA - Major characteristics
MI - Minor characteristics

$ P - Agency Performing the Test.
W - Agency Witnessing the Test.
V - Agency Verifying the Test.

1 - BHEL
2 - Vendor
3 - Sub-vendor

Sl. No.	Component / operation	Characteristics Checked	* Category	Type/Method of Check	Extent of Check	Reference documents	Acceptance Norms	Format of Records	Agency $ P	Agency $ W	Agency $ V	Remarks
		3. Conductor a) Resistance b) Size c) Sheet colour	 MA MA MA	 Electrical Measurement Visual	 100% 100% 100%	BHEL Spec. and IS:1554 or IS:694	BHEL Spec. and IS:1554 or IS:694	Log Book	2	---	---	
		4. Type / Routine Test Certificates	MA	Verification	100%	BHEL Spec. and IS:1554 or IS:694	BHEL Spec. and IS:1554 or IS:694	Log Book	3	---	2	
4.0	Electrical Components like Annunciator Transformers Lamps Switches PBs Contactors Relays Timers Space Heaters Thermostat Indicating meters etc.	1. Verification at make and Type	CR	Visual	Sample	BHEL Spec. and BOM	BHEL Spec. and BOM	Log Book	2	---	---	
		2. Verification of Test Certificates	CR	Scrutiny of Type / Routine T.Cs.	100%	Relevant IS	Relevant IS	Log Book	2	---	---	
		3. Operation / Functional check	CR	Electrical	Sample+ 100%@	Relevant Indian Std & Catalogue	Relevant Indian Std & Catalogue	Log Book	2	---	---	+ for relay & contactors only
		4. I.R.	MA	Electrical	100%	Relevant Indian Std & Catalogue	Relevant Indian Std & Catalogue	Log Book	2	---	---	@ for all components except relays & contactors.
		5. H.V.	MA	Electrical	100%	Relevant Indian Std & Catalogue	Relevant Indian Std & Catalogue	Log Book	2	---	---	
		6. Calibration	MA	Electrical	100%	Relevant Indian Std & Catalogue	Relevant Indian Std & Catalogue	Log Book	2	---	1	
		7. Pick up / Drop off Voltage	MA	Electrical	100%	Relevant Indian Std & Catalogue	Relevant Indian Std & Catalogue	Log Book	2	---	---	

LEGEND:
* CR - Critical characteristics
MA - Major characteristics
MI - Minor characteristics

$ P - Agency Performing the Test.
W - Agency Witnessing the Test.
V - Agency Verifying the Test.

1 - BHEL
2 - Vendor
3 - Sub-vendor

Sl. No.	Component / operation	Characteristics Checked	* Category	Type/Method of Check	Extent of Check	Reference documents	Acceptance Norms	Format of Records	Agency $ P	Agency $ W	Agency $ V	Remarks
5.0	Misc. Components like Gaskets, Terminal Blocks etc.	1. Verification of Type / Make	MA	Visual	Sample	BHEL Spec. & Mfrs. Catalogue	BHEL Spec. & Mfrs. Catalogue	Log Book	2	---	---	
		2. Surface defects	MA	Visual	Sample	BHEL Spec. & Mfrs. Catalogue	BHEL Spec. & Mfrs. Catalogue	Log Book	2	---	---	
		3. IR / HV on Terminal Blocks	MA	Electrical	Sample	BHEL Spec. & Mfrs. Catalogue	BHEL Spec. & Mfrs. Catalogue	Log Book	2	---	---	
	IN PROCESS											
6.0	Blanking / Bending / Forming	1. Dimensions	MI	Measurement	100%	Approved Mfr. drgs.	Approved Mfr. drgs.	Log Book	2	---	---	
		2. Surface defects after bending	MA	Visual	100%	Factory Standard	Factory Standard	Log Book	2	---	---	
7.0	Nibbling / Punching	1. Cutout Sizes	MI	Measurement	100%	Approved Mfr. drgs.	Approved Mfr. drgs.	Log Book	2	---	---	
		2. Deburring	MA	Visual	100%	Approved Mfr. drgs.	Approved Mfr. drgs.	Log Book	2	---	---	
	ASSEMBLY											
8.0	Frame Assembly & Sheet fixing	1. Dimensions	MA	Measurement	100%	Approved drg. / Mfr. Standards	Approved drg. / Mfr. Standards	Log Book	2	---	2	
		2. Alignment	MA	Measurement	100%	Approved drg. / Mfr. Standards	Approved drg. / Mfr. Standards	Log Book	2	---	2	
		3. Welding Quality	MA	Visual	100%	Approved drg. / Mfr. Standards	Approved drg. / Mfr. Standards	Log Book	2	---	2	
		4. Surface defects	MA	Visual	100%	Approved drg. / Mfr. Standards	Approved drg. / Mfr. Standards	Log Book	2	---	2	

LEGEND:
* CR - Critical characteristics
MA - Major characteristics
MI - Minor characteristics

$ P - Agency Performing the Test.
W - Agency Witnessing the Test.
V - Agency Verifying the Test.

1 - BHEL
2 - Vendor
3 - Sub-vendor

PEM :: C&I	STANDARD QUALITY PLAN FOR LOCAL CONTROL PANEL	STD QUALITY PLAN NO.: **PE-QP-999-145-I056**
		VOLUME IIB
		SECTION D
		REV. NO. 01 DATE: 22-02-2008
		SHEET 4 OF 7

Sl. No.	Component / operation	Characteristics Checked	* Category	Type/Method of Check	Extent of Check	Reference documents	Acceptance Norms	Format of Records	Agency $ P	Agency $ W	Agency $ V	Remarks
9.0	Pre-treatment and Painting	1. Pretreatment Process	MA	Visual	100%	Factory Standard & IS: 6005	Factory Standard & IS: 6005	Log Book	2	---	1	
		2. Process parameters like bath temp. concentration etc.	MA	Measurement	Periodic	Factory Standard & IS: 6005	Factory Standard & IS: 6005	Log Book	2	---	1	
		3. Dipping / Removal Time	MA	Measurement	100%	Factory Standard & IS: 6005	Factory Standard & IS: 6005	Log Book	2	---	1	
		4. Surface quality after every dip	MA	Visual	100%	Factory Standard & IS: 6005	Factory Standard & IS: 6005	Log Book	2	---	1	
		5. Primer after phosphating	MA	Visual, Thickness	100%	Factory Standard & IS: 6005	Factory Standard & IS: 6005	Log Book	2	---	1	
		6. Putty Application & Rubbing after primer	MA	Visual	100%	Factory Standard & IS: 6005	Factory Standard & IS: 6005	Log Book	2	---	1	
		7. Paint first coat	MA	Visual, Thickness	100%	Factory Standard & IS: 6005	Factory Standard & IS: 6005	Log Book	2	---	1	
		8. Putty Application and Rubbing after first coat of paint	MA	Visual	100%	Factory Standard & IS: 6005	Factory Standard & IS: 6005	Log Book	2	---	1	
		9. Paint second coat	MA	Visual, Thickness, Scratch test Colour adhesion	100%	Factory Standard & IS: 6005	Factory Standard & IS: 6005	Log Book	2	---	1	

LEGEND:
* CR - Critical characteristics
MA - Major characteristics
MI - Minor characteristics

$ P - Agency Performing the Test.
W - Agency Witnessing the Test.
V - Agency Verifying the Test.

1 - BHEL
2 - Vendor
3 - Sub-vendor

Sl. No.	Component / operation	Characteristics Checked	* Category	Type/Method of Check	Extent of Check	Reference documents	Acceptance Norms	Format of Records	Agency $ P	Agency $ W	Agency $ V	Remarks
10.	Panel Wiring	1. Wiring Layout	MA	Visual	100%	Approved drgs. & Specs.	Approved drgs. & Specs.	Log Book	2	---	---	
		2. Wiring Termination (Crimped Lugs)	MA	Visual	100%	Approved drgs. & Specs.	Approved drgs. & Specs.	Log Book	2	---	---	
		3. Ferrule numbers	MA	Visual	100%	Approved drgs. & Specs.	Approved drgs. & Specs.	Log Book	2	---	---	
		4. Colour of wiring	MA	Visual	100%	Approved drgs. & Specs.	Approved drgs. & Specs.	Log Book	2	---	1	
		5. Size of Conductor	MA	Measurement	100%	Approved drgs. & Specs.	Approved drgs. & Specs.	Log Book	2	---	1	
11.	Component Mounting	1. Correct components	MA	Visual	100%	Approved drgs., Specs. & BOM	Approved drgs., Specs. & BOM	Log Book	2	---	---	
		2. Fixing	MA	Visual	100%	Approved drgs., Specs. & BOM	Approved drgs., Specs. & BOM	Log Book	2	---	---	
	FINAL											
12.	Final Inspection	1. Workmanship	MA	Visual	100%	Factory Standard	Factory Standard	Inspection Report	2	1	1	At Random by BHEL, based on 100 % internal test reports by Mfr.
		2. Component layout (neatness, accessibility & safety) Mounting / Proper fixing of all components	MA	Visual	100%	BHEL approved drg. / Spec.	BHEL approved drg. / Spec.	Inspection Report	2	1	1	
		3. Components identification Marking / Name plates	MA	Visual	100%	BHEL approved drg. / Spec.	BHEL approved drg. / Spec.	Inspection Report	2	1	1	

LEGEND:
* CR - Critical characteristics
MA - Major characteristics
MI - Minor characteristics

$ P - Agency Performing the Test.
W - Agency Witnessing the Test.
V - Agency Verifying the Test.

1 - BHEL
2 - Vendor
3 - Sub-vendor

PEM :: C&I

STANDARD QUALITY PLAN FOR LOCAL CONTROL PANEL

STD QUALITY PLAN NO.:	**PE-QP-999-145-I056**
VOLUME	IIB
SECTION	D
REV. NO.	01 DATE: 22-02-2008
SHEET	6 OF 7

Sl. No.	Component / operation	Characteristics Checked	* Category	Type/Method of Check	Extent of Check	Reference documents	Acceptance Norms	Format of Records	Agency $ P	Agency $ W	Agency $ V	Remarks
		5. Dimensions	MA	Measurement	100%	BHEL approved drg. / Spec., BOM	BHEL approved drg. / Spec., BOM	Inspection Report	2	1	1	At Random by BHEL, based on 100 % internal test reports by Mfr.
		6. Door functioning	MA	Functional	100%	BHEL approved drg. / Spec.	BHEL approved drg. / Spec.	Inspection Report	2	1	1	
		7. Paint Shade	CR	Visual	100%	BHEL approved drg. / Spec.	BHEL approved drg. / Spec.	Inspection Report	2	1	1	
		8. Paint Thickness	CR	Measurement	100%	BHEL approved drg. / Spec.	BHEL approved drg. / Spec.	Inspection Report	2	1	1	
		9. Workmanship of Gaskets	MA	Visual	100%	Factory Standard	Factory Standard	Inspection Report	2	1	1	
		10. Wiring Layout	MA	Visual	100%	BHEL approved drg.	BHEL approved drg.	Inspection Report	2	1	1	
		11. Wire Termination	MA	Pulling manually	Sample	-----	Firm termination	Inspection Report	2	1	1	
		12. Continuity	MA	Electrical	100%	-----	Continuity OK	Inspection Report	2	1	1	

LEGEND:
* CR - Critical characteristics
MA - Major characteristics
MI - Minor characteristics

$ P - Agency Performing the Test.
W - Agency Witnessing the Test.
V - Agency Verifying the Test.

1 - BHEL
2 - Vendor
3 - Sub-vendor

PEM :: C&I	STANDARD QUALITY PLAN FOR LOCAL CONTROL PANEL	STD QUALITY PLAN NO.: **PE-QP-999-145-I056**
		VOLUME IIB
		SECTION D
		REV. NO. 01 DATE: 22-02-2008
		SHEET 7 OF 7

Sl. No.	Component / operation	Characteristics Checked	* Category	Type/Method of Check	Extent of Check	Reference documents	Acceptance Norms	Format of Records	Agency $ P	W	V	Remarks
13.	TYPE TEST	Degree of Protection	CR	Mech. Protection	Sample	BHEL approved spec., drg relevant IS-13947 Part-1, IS-2148.	BHEL approved spec., drg relevant IS-13947 Part-1, IS-2148.	Type Test Certificate	3	---	1	
14	ROUTINE TEST	IR before & after HV Test	CR	Electrical	100%	BHEL approved spec., drg., BOM & relevant IS.	BHEL approved spec., drg., BOM & relevant IS.	Test Report	2	1	1	
15	FUCTIONAL TEST	1. Control Logic Operation	CR	Electrical	100%	BHEL approved spec. / drg.	BHEL approved spec. / drg.	Inspection Report	2	1	1	
		2. Instrument Calibratio	CR	Electrical	10%	BHEL approved spec. / drg.	BHEL approved spec. / drg.	Inspection Report	2	1	1	
		3. Temperature rise	CR	Electrical	100%	BHEL approved spec/drg. & relevant IS.	BHEL approved spec/drg & relevant IS.	Inspection Report	2	1	1	

LEGEND:
* CR - Critical characteristics
MA - Major characteristics
MI - Minor characteristics

$ P - Agency Performing the Test.
W - Agency Witnessing the Test.
V - Agency Verifying the Test.

1 - BHEL
2 - Vendor
3 - Sub-vendor

TYPE TEST REQUIREMENTS

1.00.00 **TYPE TEST REQUIREMENTS**

1.01.00 General Requirements

1.01.01 The Contractor shall furnish the type test reports of all type tests as per relevant standards and codes as well as other specific tests indicated in this specification. A list of such tests are given for various equipment in table titled 'TYPE TEST REQUIREMENT FOR C&I SYSTEMS' at the end of this chapter and under the item Special Requirement for Solid State Equipments/Systems. For the balance equipment instrument, type tests may be conducted as per manufactures standard or if required by relevant standard.

(a) Out of the tests listed, the Bidder/ sub-vendor/ manufacturer is required to conduct certain type tests specifically for this contract (and witnessed by Employer or his authorized representative) even if the same had been conducted earlier, as clearly indicated subsequently against such tests.

(b) For the rest, submission of type test results and certificate shall be acceptable provided.

i. The same has been carried out by the Bidder/ sub-vendor on exactly the same model /rating of equipment.

ii. There has been no change in the components from the offered equipment & tested equipment.

iii. The test has been carried out as per the latest standards alongwith amendments as on the date of Bid opening but not more than five (5) year back.

(c) In case the approved equipment is different from the one on which the type test had been conducted earlier or any of the above grounds, then the tests have to be repeated and the cost of such tests shall be borne by the Bidder/ sub-vendor within the quoted price and no extra cost will be payable by the Employer on this account.

1.01.02 As mentioned against certain items, the test certificates for some of the items shall be reviewed and approved by the main Bidder or his authorized representative and the balance have to be approved by the Employer.

CLAUSE NO.	TECHNICAL REQUIREMENTS
1.01.03	The schedule of conduction of type tests/ submission of reports shall be submitted and finalized during pre-award discussion.
1.01.04	For the type tests to be conducted, Contractor shall submit detailed test procedure for approval by Employer. This shall clearly specify test setup, instruments to be used, procedure, acceptance norms (wherever applicable), recording of different parameters, interval of recording precautions to be taken etc. for the tests to be carried out.
1.01.05	The Bidder shall indicate in the relevant BPS schedule, the cost of the type test for each item only for which type tests are to be conducted specifically for this project. The cost shall only be payable after conduction of the respective test in presence of authorize representative of Employer. If a test is waived off, then the cost shall not be payable.
2.00.00	**SPECIAL REQUIREMENT FOR SOLID STATE EQUIPMENTS/ SYSTEMS**
2.01.00	The minimum type test reports, over and above the requirements of above clause, which are to be submitted for each of the major C&I systems Analyzer instruments, various PLCs etc. shall be as indicated below: i) Surge Protections for Solid State Equipments/ Systems All solid state systems/ equipments shall be able to withstand the electrical noise and surges as encountered in actual service conditions and inherent in a power plant. All the solid state systems/ equipments shall be provided with all required protections that needs the surge withstand capability as defined in ANSI 37.90a/ IEEE-472. Hence, all front end cards which receive external signals like Analog input & output modules, Binary input & output modules etc. including power supply, data highway, data links shall be provided with protections that meets the surge withstand capability as defined in ANSI 37.90a/ IEEE-472. Complete details of the features incorporated in electronics systems to meet this requirement, the relevant tests carried out, the test certificates etc. shall be submitted alongwith the proposal. As an alternative to above, suitable class of IEC-60255-4 which is equivalent to ANSI 37.90a/ IEEE-472 may also be adopted for SWC test. ii) Dry Heat test as per IEC-68-2-2 or equivalent. iii) Damp Heat test as per IEC-68-2-3 or equivalent. iv) Vibration test as per IEC-68-2-6 or equivalent.

CLAUSE NO.	TECHNICAL REQUIREMENTS
	v) Electrostatic discharge tests as per IEC 61000-4-2 or equivalent. vi) Radio frequency immunity test as per EN 50082-2 or equivalent. vii) Electromagnetic immunity as per EN 61131-2 or equivalent. Test listed at item no. v, vi, vii, above are applicable for front end cards only as defined under item (i) above.

3.00.00 TYPE TEST REQUIREMENT FOR C&I SYSTEMS

Sl No	Item	Test requirement	Standard	Test to be specifically conducted	NTPC's approval req. On test certificate	Remarks
Col 1	**Col 2**	**Col 3**	**Col 4**	**Col 5**	**Col 6**	**Col 7**
1	Elect. Metering instruments	As per standard (col 4)	IS-1248	No	Yes	
2	Electronic transmitter	As per standard (col 4)	BS-6447 / IEC-60770	No	Yes	
3	INSTRUMENTATION CABLES TWISTED & SHIELDED			No	Yes	
4	Pressure gauge	Degree of protection test	IS-2147	No	No	
		Temp interference test	IS -3624	No	No	
5	Temperature gauge	Degree of protection test	IS-2147	No	No	
6	Pressure & DP switch	Degree of protection test	IS-2147	No	No	
		As per standard (col 4)	BS 6134	No	No	
7	Level switch	Degree of protection test	IS-2147	No	No	
8	Control valves	CV Test	ISA 75.02	No	Yes	
9	Flow Nozzles & Orifice plate	Calibration	ASME PTC , BS 1042	No	Yes	
10	PLCs	All tests as per IEC-1131	IEC-601131	No	Yes	

Sl No	Item	Test requirement	Standard	Test to be specifically conducted	NTPC's approval req. On test certificate	Remarks
Col 1	**Col 2**	**Col 3**	**Col 4**	**Col 5**	**Col 6**	**Col 7**
11	Junction Box	Degree of protection test	IS-13947	No	Yes	
12	Battery charger (Not required for inbuilt chargers)	Degree of protection test	IS-13947	No	No	
		Short circuit current capability	IEC-60146-2	No	Yes	
		Temp rise test without redundant fans	Approved procedure, IEC 60146-2	No	Yes	
		SWC test	Approved procedure	No	Yes	
		Burn-in-test	Approved procedure	No	Yes	
		Efficiency	IEC-60146-2,	No	Yes	
		Audible Noise Test	IEC 60146-2	No	Yes	
		Fuse Clearing Capability	Approved procedure	No	Yes	
		Relative harmonic content	Approved procedure	No	Yes	

Sl No	Item	Test requirement	Standard	Test to be specifically conducted	NTPC's approval req. On test certificate	Remarks
Col 1	**Col 2**	**Col 3**	**Col 4**	**Col 5**	**Col 6**	**Col 7**
		ESD immunity test	IEC-61000-4-2-9(1)	No	Yes	
		Radio interference	IEC 60146-2	No	Yes	
		Over Load Test on Inverter & charger	Approved procedure	No	Yes	
		Restart Test	IEC 60146-2	No	Yes	
		Output voltage tolerance	Approved	No	Yes	
		Output voltage Harmonic content	Approved procedure	No	Yes	
		Insulation test	IEC 60146	No	Yes	
		Load Tests	Approved procedure	No	Yes	
		Preliminary light load test	IEC 60146	No	Yes	
		Current division / Voltage division	IEC 60146-2	No	Yes	
13	Battery	As per standard (col 4)	IEC –623 / IS 10918 for Ni-Cd IS-1652 for Plante Lead Acid	No	Yes	
14	Voltage stabilizers	Over Load Test	Approved procedure	No	Yes	

Sl No	Item	Test requirement	Standard	Test to be specifically conducted	NTPC's approval req. On test certificate	Remarks
Col 1	**Col 2**	**Col 3**	**Col 4**	**Col 5**	**Col 6**	**Col 7**
		Temp rise test without redundant fans	Approved procedure	No	Yes	

`

KKS NUMBERING PHILOSOPHY

KKS NUMBERING PHILOSOPHY

For identifying (tagging) an instrument / equipment in Power plant KKS numbering scheme is used. The purpose is to assign a unique number to every equipment in the power plant. For C&I equipment unique number are to be provided up to the signal level so that a unique number Input / Output exist in DCS for every signal.

Normally KKS number is a 10 digit alpha-numeric code and is typically split into the following:

X	X	X	A	A	Y	Y	B	B	B

First three digits indicate the Sub-System. The Code for the major system are given as per **Annexure-**1.

Fourth and Fifth digits are the **Numerical Keys at System Code Level** and used to distinguish between main systems having same Alpha Codes.

Sixth and Seventh digits are the **Equipment / Apparatus / Measuring Circuit Code**. The code of various Equipment / Apparatus / Measuring Circuit is shown in **Annexure-2**

Eight, Nine and tenth digits are the **Numerical Keys at Equipment / Apparatus / Measuring Circuit Code** and used to distinguish between various instruments in the same sub-group. Numerical keys at System / Equipment / Apparatus / Measuring Circuit is shown in **Annexure-3**.

**
KKS TAGS ARE PROVIDED IN THE P&ID FURNISHED BY BHEL.HOWEVER, IF THE KKS NUMBER OF EQUIPMENT/INSTRUMENTS CHANGES,THE SAME SHALL BE FINALIZED DURING DETAILED ENGINEERING.

ANNEXURE-1

List of System / Sub-System Codes used in Power Plant:

1) Refer the P&ID sheets.

ANNEXURE-2

Standard Equipment Codes:

AA	Valves including drives, also hand operated
AB	Seclusions, Lock, Gates, Doors
AC	Heat Exchanger
AE	Turning, Driving, Lifting equipment
AF	Continuous conveyors, Feeders
AG	Generator Units
AH	Heating and Cooling Units
AK	Pressing and Packaging equipment
AM	Mixer, Stirrer
AN	Blower, Air Pumps / Fans, Compressor Units
AP	Pump Units
AT	Purification, Drying, Filter
AV	Combustion Equipment e.g. grates

Standard Apparatus Codes:

BB	Vessels and Tank
BF	Foundation
BG	Boiler Heating Surfaces
BN	Injector, Ejector
BP	Flow and throughput limitation equipment (Orifice)
BQ	Holders, Carrying Equipment, Support
BR	Piping, Ducts, Chutes, Compensator
BS	Sound Absorber
BU	Insulations, Sheatings

Standard Measuring Circuits Codes:

CD	Density
CE	Electrical Quantities
CF	Flow, throughput
CG	Distance, Length, Position
CK	Time
CL	Level

CM	Humidity
CQ	Analysis (SWAS)
CS	Speed, Velocity, Frequency
CT	Temperature
CY	Vibration, Expansion

ANNEXURE-3

Numerical Keys

A) Numerical Keys at System Code Level

i) Use 10, 20, 30... To distinguish between main systems having same Alpha Codes. Examples:

a) Main Steam (Left) and Main Steam (Right)

b) BFP – A/B/C

c) ID Fan – A/B, FD Fan A/B, AH – A/B

ii) For branch off from main system path having code say 10, keep the same alpha code and use 11, 12, 13 etc. Similarly for other branch off from main system path having code say 20, keep the same alpha code and use 21, 22, 23 etc and shall carry on further in the same way.

iii) If the branch off from main system / sub system path is used for some other system, where different alpha codes can be applied, then in that case the said branch line will be designated by the alpha codes of the system to which it is providing the input.

B) Numerical keys at Equipment Code level:

There are three numerical keys available for each type of equipment code. Following has been agreed upon considering present practice, better flexibility and ease in sorting.

i) Valves and Dampers --- *Equipment Code – AA*

		N1	N2 N3
Motorised *(on/off duty)*	-	*0*	*01 to 50*
Motorised (inching duty)	-	*0*	*51 to 99*
Pneumatic (Control)	-	*1*	*01 to 50*
Motorised (thyrestor Control)	-	*1*	*51 to 99*
Sol. Operated	-	2	01 to 99
(Open / Close duty (Valves, NRVs, Gate)			
Hydraulic	-	3	01 to 99

NRV (Without actuation)	-	4	01 to 99
Manual	-	5	01 to 99
Manual	-	6	01 to 99
Relief & Safety Valves	-	7	01 to 99
Reserve	-	8	01 to 99
Reserve	-	9	01 to 99

ii) Field Instruments

Field Transmitters & Analog Signals	-	0	01 to 99
Field Switches & Binary Signals	-	1	00 to 99
PG Test Point	-	4	00 to 99
Gauges	-	5	00 to 99
Automatic Turbine Tester (ATT)-HWR	-	2	00 to 99

(Reserved for protection Signals used by Hardwar)

Example of Numerical Key Usage:

In line with the philosophy adopted for Valves / Dampers /instruments etc. pumps and fans in the main systems (having different system code) can be numbered as AP/N100 and as AP/N101, 102, ……. Where system code is same.

SECTION III

DOCUMENTS TO BE SUBMITTED BY BIDDER

COMPLIANCE CERTIFICATE

The bidder shall confirm compliance with following by signing/ stamping this compliance certificate and furnish same with the offer.

a) The scope of supply, technical details, construction features, design parameters etc. shall be as per technical specification & there are no exclusions with regard to same.

b) There are no other deviations w.r.t. specification other than those furnished in the 'Schedule of Deviations'. Any other deviation, stated or implied, taken elsewhere in the offer stands withdrawn unless specifically brought out in the 'Schedule of Deviations'

c) Bidder shall submit QP in the event of order based on the guidelines given in the specification & QP enclosed therein. QP will be subject to BHEL/ Customer/Customer's Consultant approval and customer hold points for inspection/ testing shall be marked in the QP at the contract stage. Inspection/ testing shall be witnessed as per same apart from review of various test certificates/ Inspection records etc. Charges for 3rd party inspection (TUV/ equivalent) for imported components wherever required shall be included by bidder in the base price itself.

d) Any drawing/ document/ data-sheet/ calculation/ Quality plan/ Instrumentation etc. submitted along with the offer shall be considered for reference only, same shall be subject to BHEL/ Customer/Customer's Consultant approval in the event of order.

e) The offered materials shall be either equivalent or superior to those specified in the specification. For components where materials are not specified, same shall be suitable for intended duty, all materials shall be subject to approval in the event of order.

f) The commissioning spares shall be supplied on 'As Required Basis' and to be supplied at the time of commissioning of SCS & prices for same included in the base price itself.
Prices for special tools & tackles, if any, shall also be included in the base price.
Recommended spares for 3 years shall be quoted separately with price indicated separately.

g) Charges for Installation Checks, commissioning of equipment, Trial run and Performance Testing at site shall be included by bidder in the base price itself.

h) The main flanges for SCS shall be suitable for the forces and moments as per the specification.

i) The hydrostatic test pressure shall be 1.5 times the design pressure.

j) All sub - vendors shall be subject to BHEL/ Customer/Customer's Consultant approval in the event of order.

k) The Performance guarantees of equipment shall stand valid till the satisfactory completion of performance testing & its acceptance by BHEL/ Customer/Customer's Consultant.

l) The orientation of piping around SCS shall be finalised during detailed Engg.

m) Electrical/ C&I :

- All selected motor ratings have minimum 15 % margin over maximum continuous demand of the driven equipment including voltage and frequency variations, temperature rise and other factors.
- Supply of electrical viz. LT power cables, instrumentation and control cables, cable glands, lugs, cable trays etc. shall be as per specification. Their erection shall be done by BHEL
- The junction boxes for termination of DPT/ DPS/ Actuator LS/ solenoid valves are included in bidder's scope. The instrumentation cable and cabling from instruments/ actuators to junction boxes is also included in bidder's scope.

- Valve actuators and controls shall be provided as specified in Data Sheet-A and Project specific requirements as specified in Section I-B & Section I-C.
- Alarms/ annunciations/ instruments shall be finalised during detailed engineering in the event of order which shall be subject to BHEL/ Customer/Customer's Consultant approval and shall be without any commercial implications to BHEL.
- Switch gear panel should have suitable arrangement like bus coupler for providing redundancy to incoming supply feeder.

ANNEXURE - II

LOAD TITLE	RATING (KW / A)		UNIT (U)/STN (S)	Nos.		VOLTAGE CODE*	FEEDER CODE**	EMER. LOAD (Y)	CONT.(C)/ INTT.(I)	STARTING TIME >5 SEC (Y)	LOCATION	BOARD NO.	CABLE		BLOCK CABLE DRG. No.	CONT ROL CODE	REMA RKS	LOAD No.	VERIFICATI ON FROM MOTOR DATASHEE T (Y/N)	KKS NO
	NAME PLATE	MAX. CONT. DEMAND (MCR)		RUNNING	STANDBY								SIZE CODE	NOs						
1 2		3	4	5	6	7	8	9	10	11	12	13	14	15	16	17	18	19	20	21

ANNEXURE-II

NOTES:

1. COLUMN 1 TO 12 & 18 SHALL BE FILLED BY THE REQUISITIONER (ORIGINATING AGENCY); REMAINING COLUMNS ARE TO BE FILLED UP BY PEM (ELECTRICAL)/ CUSTOMER
2. ABBREVIATIONS : * VOLTAGE CODE (7):- (ac) A=11 KV, B=6.6 KV, C=3.3 KV, D=415 V, E=240 V (1 PH), F=110 V (cc): G=220 V, H=110 V, J=48 V, K=+24V, L=-24 V
   : ** FEEDER CODE (8):- U=UNIDIRECTIONAL STARTER, B=BI-DIRECTIONAL STARTER, S=SUPPLY FEEDER, D=SUPPLY FEEDER (CONTACTER CONTROLLED)

LOAD DATA (ELECTRICAL)	JOB NO.	441	ORIGINATING AGENCY		PEM (ELECTRICAL)	
	PROJECT TITLE	3x660MW NKSTPP-FGD	NAME		DATA FILLED UP ON	
	SYSTEM	SCS	SIGN.		DATA ENTERED ON	
	DEPTT. / SECTION	ELECTRICAL	SHEET 1 OF 1	REV. 0	DE'S SIGN. & DATE	

	TITLE : SCHEDULE OF PERFORMANCE GUARANTEES FOR SELF CLEANING STRAINER (SCS)	TECHNICAL SPECIFICATION NO. PE-TS- RC3-165-N004
		SECTION : III
		SUB SECTION : IIIA
		Sheet 1 of 1 Date- 27/05/2019

S.NO.	DESCRIPTION	UNITS	TYPE-1	TYPE-2	TYPE-3
1.	Pressure drop across the SCS (i.e. between inlet & outlet nozzle) under clean condition and Normal flow condition	MWC			

PARTICULARS OF BIDDER/ AUTHORISED REPRESENTATIVE				
NAME	DESIGNATION	SIGNATURE	DATE	COMPANY SEAL