Bharat Heavy Electricals Limited
ELECTRONICS DIVISION
Mysore Road, Bangalore – 560026 Ph. 080-26998497
SC&PV – PVSS- DEPT.

NOTICE INVITING TENDERS

1	TENDER NUMBER(RFQ)	:	EDN: PVSS: SCCL: 129 MW: MMS/10MW&30MW/03 ; Dt: 15.05.2019
2	NAME OF WORK	:	MMS Pile foundation works, MMS column, superstructure and module erection, Pile load test & Land levelling works and other associated works at 30MW Manuguru and 10MW STPP Pegadapally for 129 MW SPV power plant for SCCL at Telangana. (All listed works shall be Undertaken and executed)
3	ESTIMATED COST	:	**Rs.840.0 lakhs (Approx. for 2 Project sites) Plus applicable GST.**
4	EARNEST MONEY DEPOSIT	:	**Rs.12.56 Lakhs (Mandatory for MSME also)** **(a) Bidders can submit Rs.12.56 Lakhs EMD through DD/SBI Collect (Please refer point no.: 21 of "Instructions to tenderer" for guideline for payment through SBI Collect)** **(b) Alternatively bidders can submit Rs.2.0 Lakhs EMD through DD/SBI collect and balance Rs.10.56 Lakhs in the form of Bank Guarantee from the scheduled bank.**
5	SECURITY DEPOSIT	:	50% of SD shall be submitted before start of work; Balance will be recovered from running Bills at a rate of 10%. (SD= 5% of the work order amount); 50% of SD will be released after completion of all the works and remaining 50% after 6 months from the date of completion of all the works.
6	COMPLETION TIME	:	(a) 20MW and above shall be 3 Months (b) Less than 20MW shall be 2 Months (From the date of placement of Order/handing over of the site.)
7	LAST DATE AND TIME FOR THE SUBMISSION OF DULY FILLED IN TENDER DOCUMENT	:	31.05.2019 Before 01:00 P.M
8	PLACE OF SUBMISSION OF TENDER DOCUMENT	:	Smt. PRACHI RAO V., AGM (SC&PV- Engg.) 5th Floor, New Engineering Building, BHEL- Electronics Division Mysore Road, Bangalore -560 026.
9	ADDRESS TO BE SUPERSCRIBED ON TENDER ENVELOPE	:	Smt. PRACHI RAO V., AGM (SC&PV- Engg.) 5th Floor, New Engineering Building, BHEL- Electronics Division Mysore Road, Bangalore -560 026.
10	DATE AND TIME OF TECHNICAL BID OPENING	:	31.05.2019 Before 01:30 P.M
11	TENDER MONITORING AUTHORITY (IEM)	:	1. Shri D.R.S Chaudhary, IAS (Retd.) Email: dilip.chaudhary@icloud.com AND 2. Mrs. Pravin Tripathi, IA and AS (Retd.) Email: pravin.tripathi@gmail.com

NOTE: The tenderer shall return the dully filled in tender document after affixing signature on all pages and submit.

NIT Issued By CONTACTOR (SIGN & SEAL)

Mowleeswaran Natesan,
Dy. Manager-Civil, BHEL-EDN

Bharat Heavy Electricals Ltd
Electronics Division
Mysore Road, Bangalore – 560026

Tender Document for

MMS Pile foundation works, MMS column, superstructure and module erection, Pile load test & Land levelling works and other associated works at 30MW Manuguru and 10MW STPP Pegadapally for 129 MW SPV power plant for SCCL at Telangana.

TENDER NUMBER RFQ: EDN: PVSS: SCCL: 129 MW: MMS/10MW&30MW/03; Dt.: 15.05.2019

TECHNICAL BID DATE OF OPENING: 31-05-2019 (Price bid opening date intimation will be given separately)

Part – I	Technical cum Commercial Bid	.....	42 Pages
	Unpriced Price Bid	.....	04 Pages
	Technical and General Specification	.....	48 Pages
	BHEL General Conditions of Contract 2019	.....	33 Pages
	Tentative Tender Drawing	.....	03 Page
	Tentative Field Quality Plan	.....	24 Pages
	Pile Test Methodology	.....	10 Pages
	Integrity Pact	.....	07 Pages
	Annexure to Integrity Pact	.....	01 Page
	Bank Guarantee format for EMD	.....	02 Pages
Part – II	Price Bid	.....	04 Pages

Note:

1. Part – I: To be submitted in a separate sealed cover.
2. Part – II: To be submitted in a separate sealed cover.
3. Earnest Money Deposit of Rupees 12.56 Lakhs shall be submitted as per point No. 4 of page No. 1 of this tender document.
4. Tenders will be liable for rejection if the above mentioned EMD is not submitted along with the tender.
5. Part-I, Part-II, Tender EMD sealed covers should be put in outer envelope and super scribing the Name of work and Name & Address of the Tenderer.
6. **Firms banned by BHEL are not eligible to participate in the tender. The tender envelope submitted by such a firms will not be opened for evaluation and no communication in this regard will be entertained.**
7. Only those bidders who have entered into Integrity Pact with BHEL would be competent to participate in the bidding. In other words, entering into integrity Pact shall be preliminary qualification. Details of Independent External Monitors (IEM) for this tender is in page No. 1, Sl. No. 11.

NIT Issued By

Mowleeswaran Natesan,
Dy. Manager-Civil, BHEL-EDN

CONTACTOR (SIGN & SEAL)

BHARAT HEAVY ELECTRICALS LTD, ELECTRONICS DIVISION, BANGALORE-26

TENDER NUMBER RFQ: EDN: PVSS: SCCL: 129 MW: MMS/10MW&30MW/03; Dt.: 15.05.2019

PART-I TECHNICAL-CUM-COMMERCIAL BID

(To be furnished by the Bidders)

01. NAME OF THE WORK : **MMS Pile foundation works, MMS column, superstructure and module erection, Pile load test & Land levelling works and other associated works at 30MW Manuguru and 10MW STPP Pegadapally for 129 MW SPV power plant for SCCL at Telangana.**
(All listed works shall be Undertaken and executed)

02. APPROXIMATE ESTT.COST RS. : Rs.840.0 Lakhs (APPROX.) Plus applicable GST.

03. COMPLETION PERIOD : (a) 20MW and above shall be 3 Months
(b) Less than 20MW shall be 2 Months
(From the date of placement of Order/handing over of site.)

04. NAME OF THE CONTRACTOR :
(WITH CONTACT PERSON)

05. ADDRESS
(A) OFFICE :

E-mail :
TEL. PH. NO. :

(B)RESIDENCE :

TEL.PH NO :

06. PAN NO :

07. GST NO :

08. STAFF STRENGTH :

09. PLANT/EQUIPMENTS : List enclosed/not enclosed

10. a) SCOPE OF WORK : UNDERSTOOD/ NOT UNDERSTOOD
(As per schedule of items)
b) Accept to execute in total : YES/ NO

c) Bar chart to be submitted : YES/ NO
Individually for each work for L1 Scope

NIT Issued By

Mowleeswaran Natesan,
Dy. Manager-Civil, BHEL-EDN

CONTACTOR (SIGN & SEAL)

d) In order to complete the project in the specified months schedule, vendor to deploy separate Four gangs/teams (or) more as per site requirement for each individual activities along with tools and machineries, Undertaking should be submitted along with offer : YES/ NO

11. a) EMD PARTICULARS (DEMAND DRAFT/ SBI COLLECT REF NO. / BG DETAIL) :

b) Electronic Funds Transfer (EFT) form enclosed : Please fill up the form in ANNEXURE-II

12. Penalty as per BHEL General conditions of contract 2019 clause No. 2.7.9 : Accepted / Not accepted

13. Constitution of Firm : Individual / Sole Proprietorship Concern / Partnership Firm / Public Ltd. Company/ Private Ltd. Company.

14. BHEL reserves right to conduct reverse auction : Accepted / Not accepted

15. Accept to pay statutory payments like ESI, PF, BOCW, etc., as per terms and conditions of BHEL and Govt. guideline's : Accepted / Not accepted

16. Accept for "Splitting of Contract", As per page no. 6 of this NIT : Accepted / Not accepted

17. BHEL Payment terms acceptance (Cl. no. 21, 22.1 & 22.2 of "Special Conditions of Contract") : Accepted / Not accepted

18. The bidder should encourage to use local labor that has the necessary skills as per the requirement of work. : Accepted / Not accepted

Note:

1. Bidders are advised to quote their best prices (% above/below the total estimate +/_ (or) at par) as no further price bids will be accepted in case BHEL decides to open price bids instead of reverse auction.

2. Reverse auction seal bid opening price should not be more than the manual quoted (hand written) price bid

NIT Issued By

Mowleeswaran Natesan,
Dy. Manager-Civil, BHEL-EDN

CONTACTOR (SIGN & SEAL)

PRE QUALIFICATION CRETERIA

1 Experience of having successfully completed MMS pilling works (or) RCC building works during last 7 years from the date of tender notice.

a) Three similar completed MMS pilling works (or) RCC building works each costing not less than an amount equal to 40% of NIT displayed value mentioned against each work in the tender notice (i.e., Rs.251 Lakhs).

OR

b) Two similar completed MMS pilling works (or) RCC building works each costing not less than an amount equal to 50% estimated value mentioned against each work in the tender notice (i.e., Rs.314 Lakhs).

OR

c) One similar completed MMS pilling works (or) RCC building works each costing not less than an amount equal to 80% estimated value mentioned against each work in the tender notice (i.e., Rs.502 Lakhs).

2. Average annual financial turn over during the last 3 years, ending 31st March of the previous financial year, should be 30% of the NIT displayed value mentioned against each work in the tender notice (i.e., Rs.188 Lakhs).

Note: Offers of the Tenderers not meeting the above requirements are liable to be rejected.

Documents required to be submitted

1. Registration Certificate with ESI and PF Authority/Declaration.
2. Income Tax Returns for last Three years
3. Balance Sheet and Profit & Loss Account for the last 03 years by auditor.
4. Availability of Technical personnel in letter head.
5. Registration with BHEL/CPWD/other Govt. organization/PSU if any.
6. Declaration for full filling the BOCW requirements.
7. List of equipment to be mobilized at site.
8. GST Registration details or Declaration.

All the supporting documents to be signed and sealed by the bidder (BHEL have the rights to verify the original documents if required)

NIT Issued By

Mowleeswaran Natesan,
Dy. Manager-Civil, BHEL-EDN

CONTACTOR (SIGN & SEAL)

SPLITTING OF SCOPE OF WORK/CONTRACT:

In view of large quantum of work and restricted period for completion of project and project location, BHEL may split the contract/scope of work as below,

a. L1, L2, L3 and L4 bidder with 20MW scope of work at 30MW Manuguru to L1, 10MW scope of work at 30MW Manuguru to L2, 6MW Scope of work at 10MW STPP Pegadapally to L3 and 4MW Scope of work at 10MW STPP Pegadapally to L4, in such case L2, L3 and L4 bidder has to match the price of L1 bidder.

b. In case of denial of the same by L2, L3 and L4, it shall be countered offered subsequently to all other bidders till BHEL get three vendors to accept L1 prices and then scope of work shall allotted as mentioned.

c. But in case BHEL do not get three vendors to accept L1 price and only Two bidder agrees for L1 price, the scope of work of 20MW Scope of work at 30MW Manuguru shall be allotted to L1 and 10MW scope of work at 30MW Manuguru shall be allotted to L2 and 10MW scope of work at 10MW STPP Pegadapally to L3.

d. But in case only one bidder agrees for L1 price, the 30MW scope of work at 30MW Manuguru shall be allotted to L1 and 10MW Scope of work at 10MW STPP pegadapally to L2.

e. However in no case, the maximum scope of work awarded to a single bidder shall not exceed 30MW as mentioned in "(d)".

f. BHEL may award the contract based on the number of qualified bidders (N). If the number of qualified bidders are three or more, the splitting as proposed above may be limited to (N-1) qualified bidders.

g. In any of the case, BHEL reserves the right to change the splitting of the scope of work (or) BHEL may take a decision to re-float the part/full scope of work of tender.

NIT Issued By

Mowleeswaran Natesan,
Dy. Manager-Civil, BHEL-EDN

CONTACTOR (SIGN & SEAL)

INFORMATION TO THE TENDERER:

(i) Successful Bidder should establish their Site office at Construction site, including common facilities such as toilet, water, electricity etc. in consultation with BHEL. Contractor has to arrange water and power as required for completing the job in the stipulated time frame at their own cost.

(ii) The bidders should furnish "Site Inspection Certificate" in Annexure-III enclosed herewith.

(iii) Bidders should study the prevailing Market trend of Construction materials/laborers/other relevant requirement before quote and submit the competitive price.

(iv) The bidder should encourage to use local labor that has the necessary skills as per the requirement of work.

(v) Before engaging the labour in to work, Contractor should get the NOC from labours' native police station as well as NOC from local police station (If applicable).

(vi) The bidders should carry out preliminary survey at proposed construction site before submission of offer to ensure that the rate quoted for the relevant schedule of items are correct.

(vii) Contractor to note BHEL reserves the right to get any part of the work done through other agency or deploy BHEL's own/hired/otherwise arranged resources, at the risk and cost of the contractor after due notice of a period of two weeks by BHEL, in the event of:-

a) Contractors continued poor progress
b) Withdrawal from or abandonment of the work before completion of the work.
c) Contractor's inability to progress the work for completion as stipulated in the contract
d) Poor quality of work
e) Corrupt act of Contractor
f) Insolvency of the contractor
g) Persistent disregard to the instructions of BHEL
h) Assignment, transfer, sub-letting of contract without BHEL's written permission
i) Non fulfillment of any contractual obligations
j) In the opinion of BHEL, the contractor is overloaded and is not in a position to execute job as per required schedule.

(viii) The liquidated damages/penalties arising out of Risk and Cost as explained under Sl.no (vii). BHEL shall recover the amount from any money due from Contractor, or from any money due to the contractor including security deposit, or by forfeiting any T & P or material of the contractor under this contract or any other contract of BHEL or by any other means or any combination thereof.

NIT Issued By

Mowleeswaran Natesan,
Dy. Manager-Civil, BHEL-EDN

CONTACTOR (SIGN & SEAL)

(ix) **Documents to be submitted on award of work (as applicable):**

a) Security deposit in the form of Cash/DD/ NSC's / Kisan Vikas Patra / FDR / Bank Guarantee in favour of BHEL

(b)Electronic Fund Transfer Form duly signed & sealed by banker along with cancelled cheque copy

(c) Labour license of the workmen engaged valid for contract period (If applicable)

(d) Workmen Compensation Insurance Policy for the workmen engaged valid for contract period

(e) Deduction of statutory taxes (as applicable) at source would be enforced from the running bills at the rates prescribed unless exemption certificate is produced from the concerned authorities.

The following documents are to be submitted along with the Running Account Bills for process of payment

a) Tax Invoice with details of GST number of BHEL and contractor.
b) Measurement books duly filled and signed by officials of BHEL and contractor
c) Provident PF Remittance challan for the bill duration.
d) ESI Remittance challan for the bill duration.
e) Invoice submitted along with running bills to indicate the GST amount charged and bear GST NUMBER etc. as per prevailing taxes.

Bill submitted subsequently to be accompanied with a declaration that GST liability on the earlier bill has been discharged.

i) by paying money to the Government (along with Tax paid Challan Copy)
ii) by utilization of Input GST Credit

f) BOCW Registration and payment proof.
g) Field quality assurance documents (as applicable) as per instruction of Engineer In-charge.
h) List of supplier/supplier's (material and manpower).
i) After completion of work, bidders should mandatorily furnish NOC from all declared suppliers along with the running/Final Bill.

Mobilization at site:

1) Requisite Material (all construction materials like cement, sand, coarse aggregate, reinforcement steel, etc.,), men (mason, carpenter, bar binder, fabricator, etc.,) and machinery (Concrete mixer machine/RMC/AJAX with printing facility, Power chain saw, JCB/excavator/dozer, grader, tipper, etc., Total station & other equipment required for levelling, grading works, MMS and other associated works as listed in BOQ) should be arranged in order to complete the project within stipulated time period.
2) The contractor shall carry the work as per the approved Field Quality Plan issued by BHEL (Field quality plan enclosed with this tender for reference)
3) Calibration of equipment's should be done by NABL accredited laboratories.
4) Contractor shall submit the design mix report (from NABL/Govt. approved labs) and shall carry the work as per the approved design mix report, approved by BHEL/SECI/SCCL.
5) **Contractor shall conduct the pile load test (Initial and routine test) and shall submit the report (from NABL/Govt. approved labs) as approved by BHEL/SECI/SCCL**

NIT Issued By

Mowleeswaran Natesan,
Dy. Manager-Civil, BHEL-EDN

CONTACTOR (SIGN & SEAL)

Bharat Heavy Electricals Limited
ELECTRONICS DIVISION
MYSORE ROAD- BANGALORE-26
INSTRUCTIONS TO TENDERER

1. Sealed Tender for the above noted work is hereby invited from Contractors experienced in similar civil works like RCC building works (such as Industrial, commercial and Residential).
2. Scope of work for 129MW: **MMS Pile foundation works, MMS column, superstructure and module erection, Pile load test & Land levelling works and other associated works at 30MW Manuguru and 10MW STPP Pegadapally for 129 MW SPV power plant for SCCL** at two different locations as specified under Sl. No. 3 "Project scope, detail and location" as per Tender/approved construction drawing, works as per instruction of Engineer in charge, terms and condition of contract. However Depending on site conditions minor modification in works may be necessary.
3. Project Scope, detail and Location:

Site Detail	Project detail	Location	Scope of Work
Project Site-1	30MWp (AC) SPV Power plant for SCCL	Manuguru, Dist.: Bhadradri Kothagudem, Telangana state	30MWp (AC)
Project Site-2	10MWp (AC) SPV Power plant for SCCL	Pegadapally STPP, Dist.: Mancherial, Telangana state	10MWp (AC)

4. **Tenders should be addressed to: Smt. PRACHI RAO V., AGM (SC&PV- ENGG, NEB 5th Floor, Electronics Division, Bharat Heavy Electricals Limited, Mysore road, Bangalore – 560 026. In three separate sealed cover for "Technical cum Commercial Bid", Price Bid and DD for Tender document Cost (if applicable) & EMD duly super scribed and put in an outer envelope, super scribing the Name of work, Tender no. and Name and address of the Tenderer.**
5. The local address of the Contractors, the name of the person to whom all the Correspondence are to be addressed should be indicated, with telephone number (both office and residence).
6. All entries in tender documents should be in one ink (preferably blue ink). Erasing and overwriting is not permitted. All corrections should be duly signed by tenderer concerned.
7. Tenderers shall fill in all the required particular in the blank space provided for this purpose in the tender documents and also sign in each and every page of the tender document including the drawings attached there to before submitting tender.

NIT Issued By

Mowleeswaran Natesan,
Dy. Manager-Civil, BHEL-EDN

CONTACTOR (SIGN & SEAL)

8. Unit rate/percentage above or below estimate should be quoted in figures as well as in words in Indian Currency only i.e. Rupees and Paisa with reference to each item and for the items shown in the attached schedule. These rates shall be for the finished work at site. The rate shall include all taxes and duties payable on account of Octroi, Sales Tax, tax on work contract etc., and also expenses towards PF and ESI contributions (see clauses 8, 40 and Enclosure 'C') but excluding

9. In case the rate quoted in figures differs from those quoted in words, the lower of the rates quoted will be taken as the tendered rate and shall be binding on the tenderer.

10. The rate to be quoted by the tenderer shall be firm and shall cover and include all statutory levies such as "Octroi, sales tax, excise duty etc., arising from Act passed by Parliament or State Legislature and rules framed there under. The rates shall further be deemed to include statutory levies arising from such Acts, Central or State, which may come into force, subsequent to submission of tenders.

11. (a) The rate quoted in the tender shall remain valid for a period of 'THREE MONTHS' from the date of opening tender.

(b) Tenderer shall not increase quoted rates, once the tenderer has submitted offers/quotation/price and during execution of contract in case tender is accepted.

(c) Successful bidder should execute the work strictly in accordance with Tender schedule quoted rates as accepted by BHEL.

(d) **PRICE VARIATION clause not applicable**.

12. The rates quoted should be inclusive of all taxes arising on the transaction. If BHEL is required to discharge the liability of any taxes on the transaction like TDS(IT), TDS(WCT), TDS(GST) (as applicable) under reverse charge mechanism or any other similar taxes, which is or becomes payable by BHEL, the same shall be deducted from the bills of the contractor. **The rate/Percentage quoted by bidder shall be including all taxes but excluding GST which shall be shown separately in price bid.**

13. Quantities shown in the schedule are only approximate and are liable to variation without entitling the Contractors to any compensation.

NIT Issued By

Mowleeswaran Natesan,
Dy. Manager-Civil, BHEL-EDN

CONTACTOR (SIGN & SEAL)

14. Before tendering, the tenderer are advised to inspect the site of work and its environments and be well acquainted with the actual working and other prevailing conditions, position of material and labour. They should be well versed with BHEL General Conditions of Contract instruction to the tenderers, drawing and specification and all other documents which form part of the agreement to be entered into subsequent to award of work. The tenderer should be specially note that it is tenderers responsibility to provide any items which is not specifically mentioned in the specifications and drawing, but which is necessary to complete the work.

15. Details and quantities of each item of work shown in the bill of quantities attached here to only approximate. They are given as a guide for the purpose of tendering only and are liable for variation and alteration at the discretion of the competent authority. The work under each item as executed shall be measured and price at the corresponding rates to be quoted by the Contractor in the bill of quantities attached hereto.

16. Should a tenderer find discrepancies or omission in the drawing attached to the tender documents or should be in doubt as to their meaning he should at once address to the authority inviting the tender for clarifications. Every endeavor is made to avoid any error which can materially affect the basis of the tender but successful tenderer shall take upon himself to provide for the risk of any error which may be subsequently discovered and shall make no subsequent claim on account thereof.

17. In the event of the tender being submitted by a firm the tender must be signed separately and legibly by each partner or member of the firm or in their absence, by the person holding the power of Attorney on behalf of firm concerned. In the latter case, a copy of the power of Attorney duly attested by a Gazette Officer must accompany the tender.

18. If in any case, the date of Tender Opening falls on holiday, the Tender will be opened on the next working day.

19. Every tender must be accompanied by Earnest Money Deposit. This earnest money will be refunded to the unsuccessful tenderer after finalization of the award of work. In the case of successful tenderer, the earnest money will be retained as a part of Security Deposit for satisfactory completion of the work in accordance with Clause-16 of BHEL General Conditions of the Contract. Tenders without Earnest Money Deposit receipt are liable to reject. No interest will be paid on the earnest money deposit.

NIT Issued By

Mowleeswaran Natesan,
Dy. Manager-Civil, BHEL-EDN

CONTACTOR (SIGN & SEAL)

20. **The Earnest money deposit may be furnished**

a) **Demand Draft in favour of BHEL EDN, Bangalore – 560026.**

b) **The Earnest money deposit may be furnished through online from SBI Collect.**

Guidelines for payment of EMD Fee

Step-1: Please enter the following link in your internet address browser or click on the following link.
https://www.onlinesbi.com/sbicollect/icollecthome.htm
Please click on "proceed" after Clicking "Check Box" to proceed for payment
Step-2: Now the SBI's SB-Collect site gets opened. Please select State of Corporation as "Karnataka" and type of Corporation as "PSU-PUBLIC SECTOR UNDERTAKING" and then click on "Go" appearing on the screen.
Step-3: Now select "Bharat Heavy Electricals LTD" from the dropdown table appearing against "Industry Name" and click Submit
Step-4: Now select "Others " from the dropdown table appearing against "Category" and click Submit
Step-5: The below screen (similar) will appear. Please select sub category "EMD" and fill up other details and transfer money.

21. For reimbursement of Earnest Money Deposit, the tenderer should fill the enclosed EFT form, obtain the Banker's signature and also enclose a photocopy of cancelled cheque leaf.

22. EMD may be submitted in Bank guarantee as per Sl. No. 4 (b), page No. 1, in BHEL format in Non-judicial stamp paper amounting Rs.200 (or) applicable rate at bidder's state, whichever is higher. **Bank guarantee from any Co-operative banks are not acceptable in any circumstances.**

NIT Issued By

Mowleeswaran Natesan,
Dy. Manager-Civil, BHEL-EDN

CONTACTOR (SIGN & SEAL)

23. Unless the bidder whose tender is accepted signs contract agreement within fifteen days (15 days) of the date of the order directing to do so, the amount of Earnest Money already deposited by bidder will be forfeited and acceptance of the tender withdrawn.

24. If after opening of tenders a tenderer revokes the tender or increase of earlier quoted rates or after acceptance of his tender does not commence the work in accordance with the instruction of Engineer-in-charge, the Earnest Money Deposited by bidder will be forfeited and acceptance of bidder's tender withdrawn.

If only a part of work included in the tender had been awarded to the tenderer, the amount of Earnest Money to be retained will be based on value of the contract so awarded.

25. The BHARAT HEAVY ELECTRICALS LIMITED reserve the right to reject any or all the tenders received or accept any tender or part thereof without assigning reason thereof. In the case of acceptance of a part of tender, the time for completion may also be reduced to the extent considered necessary by the accepting authority.

26. Conditional and Unsigned tenders, tenders which are incomplete or otherwise considered defective, tenders which are not in accordance with the tender conditions laid down by the accepting officer and tenders not submitted in the prescribed forms are liable to be rejected.

27. Tenderer shall submit Solvency Certificate for the value specified from a Bank of standing regarding the tenderer's financial position (as applicable).

28. The tenderers should enclose relevant documents regarding constitution of firm i.e. Individual / Sole Proprietorship Concern / Partnership Firm / Public Limited Company / Private Limited.

29. The tenders should be enclosed with a list of contracts already held by the tenderer at the time of submitting the tender and giving the following particulars:

a) Name of the work, value and address.

b) The balance work remaining to be done on the same.

30. a) The filled in tender sealed cover shall be handed over/couriered/speed post to at office of "**Smt. PRACHI RAO V., AGM (SC&PV- ENGG, NEB 5th Floor, Electronics Division, Bharat Heavy Electricals Limited, Mysore road, Bangalore – 560 026)"** before the time fixed for submission of tender.

b) Tenders received after the due date & time of opening of tenders will be rejected.

31. The Contractors responsibility under this contract shall commence from date of receipt of the order or acceptance of tender.

NIT Issued By

Mowleeswaran Natesan,
Dy. Manager-Civil, BHEL-EDN

CONTACTOR (SIGN & SEAL)

32. Tenders submitted by speed post or courier service shall be posted with due consideration of any delay in postal delivery. Tenders received after the due date of opening tenders are liable to be rejected.

33. If proprietor or partner of a firm expires after the submission of tender or after the acceptance of tender, BHEL reserves the right to cancel the contract if the character of the firm undergoes a substantial change.

34. THE BHARAT HEAVY ELECTRICALS LIMITED will not be bound by any power of Attorney granted by the tenderer or changes in the composition of firm made subsequent to signing of the contract. They may however recognize such power of Attorney and changes after obtaining proper legal advice.

35. If the tenderer deliberately gives wrong information on tender regarding past unsatisfactory performance with BHEL sister units, BHEL reserves the right to reject such tender at any stage including contract execution period.

36. Words imparting the singular number shall also be deemed to include the plural number and vice-versa where the context so require.

37. The General and Special Conditions are complementary to each other and where they are in conflict, the special condition shall prevail.

38. The expenses for completing the stamping agreement shall be paid by the contractor.

39. Unless or otherwise stated above tendered work includes men, material, machine and commissioning of equipment as agreed to in the contract.

40. After completing of the job, the contractor has to furnish actual drawings of work done in consultation with Engineer-in-charge.

41. Any covering letter and comments of the tenderer should be submitted along with the offer.

42. Cement and steel for carrying out Civil Works will have to be procured by the Contractor. Materials shall be accompanied with Test certificates and connected dispatch documents for proof of source from approved manufacturer's works or stockyard. The Contractor shall provide all the materials needed for trial run, testing including chemicals, consumables etc. In quoting their rates, the Contractors are advised to take into account the cost of the above materials. All the construction materials should be approved by BHEL before commencement of work.

43. Contractor are required to follow Field Quality Plan (FQP) for Civil construction as approved by BHEL/customer in respect of Tests to be carried out and reports and documents to be furnished.

44. Should a tenderer or a contractor has a relative or in the case of firm or company, any of its shareholders relative is employed in Bharat Heavy Electricals Limited, the authority inviting tenders

NIT Issued By

Mowleeswaran Natesan,
Dy. Manager-Civil, BHEL-EDN

CONTACTOR (SIGN & SEAL)

shall be informed of this fact at the time of submission of the tender, failing which tender may be disqualified or if such fact subsequently comes to light.

45. These 'INSTRUCTIONS TO TENDERER' & GENERAL CONDITIONS OF CONTRACT OF BHEL' shall be deemed to form an integral part of the Contract agreement for the work to be entered into. The Contractor has to scrutinize the same, and when submitting his tender, indicate his acceptance of both. In cases of variation between the two in any matter, the conditions in the 'THE INSTRUCTIONS TO TENDERER' shall prevail. (Extracts of important clauses of BHEL GCC are enclosed).

46. All operations to be carried out by the Contractor during the execution of the contract such as drilling, welding etc., shall be done with proper equipment to be brought by the tenderer. Contractor shall make his own power and water supply.

47. The Contractor shall comply with the provision of Employees Provident Fund's and miscellaneous Provisions Act 1952 and rules, regulations and other orders issued there under. He as an employer shall be liable to pay employer's contribution/deductions towards PF under the PF Act in respect of all labour employed by him for the execution of the contract in accordance with the provisions of the Employees' Provident Funds and Miscellaneous Provisions Act, 1952 as amended from time to time. For this purpose he shall indicate the code number obtained from the Regional Provident Fund Commissioner or he should obtain a code number if he has not and produce the Photostat copy of the challan receipt of monthly remittance of the contribution made by him to the Commissioner. He shall also furnish such returns such returns as are due, under the Act, to be sent to the appropriate authorities through the Principal Employer".

48. The Contractor should get himself registered with the E.S.I Authorities as an independent Employer, obtain a separate code number and remit the dues in respect of the Labour employed by him for the work and produce the challan/Receipts of remittance of the ESI contributions due under the E.S.I Act to the Company authorities. He shall also furnish such returns, as are due, under the Act, to be sent to the appropriate authorities' through the Principal Employer. The contractor can remit their ESI & PF through a sub-agent who processes the ESI & PF code and agrees to enter an MOU with the contractor.

45. If any action is brought in by P.F. Commissioner/ESI authorities on BHEL for the work done by the Contractor for his labourers regarding PF/ESI amount due, short remittances, non-remittances etc., the Contractor shall defend the case on behalf of BHEL and / or reimburse BHEL the expenses so incurred.

46. The Contractor shall apply and obtain license under Contract labour (R&A) Act 1970 and comply the relevant provisions of this Act in respect of the labour employed by him for executing this contract. The contractor shall furnish necessary returns to the authority through the Principal Employer.

NIT Issued By CONTACTOR (SIGN & SEAL)

Mowleeswaran Natesan,
Dy. Manager-Civil, BHEL-EDN

47. Contractor shall insure all his labourers and material. Any claim by his Employees for damages shall be settled by the Contractor even if action is against BHEL or to reimburse the legal expenses incurred by BHEL.

48. Any action brought in by anybody on BHEL regarding patent, right etc., used by Contractor in execution of work shall be defended by the Contractor and / or reimburse BHEL the cost of the same.

49. Contractor shall produce necessary records, documents; explanation whenever he is called upon to do by any Government Agencies.

50. Contractor should obtain "Workmen Compensation Policy" for their Employees.

51. LEAD, LIFT, DEWATERING ETC.,

a) Unless otherwise specified in the tender schedule, the rates for all items will be deemed to include all leads, lifts and descents involved in the work.

b) No separate payment will be made for dewatering (including seepage, surface drainage and monsoon water) desludging and allied operations at any stage of the work, and the cost of such operations will be deemed to be included in the contract rates.

c) No separate payment will be made for curing including pumping of curing water where ever necessary.

52. EXTRA ITEMS

No extra items of work shall be carried out by the contractor other than those authorized to do so in writing by the Engineer-in-charge. For any such items of work executed as per instructions of Engineer-in-charge, the rates will be fixed on the basis indicated under clause 50 of BHEL GCC/as per terms and conditions of BHEL. The schedule of rates to be followed in this case will be CPWD schedule of rates.

NIT Issued By

Mowleeswaran Natesan,
Dy. Manager-Civil, BHEL-EDN

CONTACTOR (SIGN & SEAL)

BHARAT HEAVY ELECTICALS LIMITED

(ELECTRONICS DIVISION)

MYSORE ROAD- BANGALORE-26

GENERAL CONDITIONS OF CONTRACT/TECHNICAL SPECIFIC ATION

It is hereby agreed by me/us that the BHEL General Conditions of Contract including subsequent amendments/ additions/deletions to clauses if any, and conditions pertaining the settlement of disputes by Arbitration form an integral part of the tender documents and that the tender submitted by me/ us is subject to the aforesaid BHEL General Conditions of Contract/ Technical Specification for Civil works which has been read and accepted by me/us.

NIT Issued By

Mowleeswaran Natesan,
Dy. Manager-Civil, BHEL-EDN

CONTACTOR (SIGN & SEAL)

ENCLOSURE: A

CLAUSE 20 OF GENERAL CONDITIONS OF CONTRACT

LABOUR

The Contractor shall employ labour in sufficient numbers either directly or through sub-contractors to maintain the required date of progress and of quality to ensure workmanship of the degree specified in the contract and to the satisfaction of the Engineer-in-charge. The contractor shall not employ in connection with the works any person who has not completed his eighteen years of age.

The contractor shall furnish to the Engineer-in-charge at the intervals specified by him. A distribution return of the number and description by trades of the work people employed on the works. The Contractor shall also submit on the 4th and 19th or every month to the Engineer-in-charge a true statement showing in respect of the second half of the preceding month and the first half of the current month (i) the accidents that occurred during the said fortnight showing the circumstances under which they happened and the extent of damage and injury caused by them and (ii) the number of female workers who have been allowed maternity benefits as provided in the maternity benefit Act, 1961 or Rules made there under and the amount paid to them.

The contractor shall pay to labour employed by him either directly or through sub-contractors wages not less than fair wages as defined in the contractors Labour Regulations.

The Contractor shall in respect of labour employed by him either directly or through sub- contractors comply with or cause to be complied by with sub-contractors, labour Regulations in regard to all matters provided therein.

The Contractors shall comply with the provisions of the payment of wages Act, 1936,Minimum Wages Act, 1948, Workmen's Compensation Act 1923, Industrial Disputes Act, 1947, Maternity Benefit Act 1961 or any modifications there of or any other law relating thereto and rules made there under from time to time.

The Contractors shall be liable to pay his contribution and the employees' contribution of the State Insurance Scheme in respect of all labour employed by him for the execution of the contract, in accordance with the provision of "The Employees', State Insurance Act, 1948", as amended from time to time. The Contractors shall apply to the ESI Authorities, get himself registered with them and obtain a code Number. He shall pay the remittances under his code Number only. The Contractor shall be liable

NIT Issued By

Mowleeswaran Natesan,
Dy. Manager-Civil, BHEL-EDN

CONTACTOR (SIGN & SEAL)

to pay his contribution and the Employees' contribution towards PF as per Provident Fund Rules and Regulations in respect of all labour employed by him for the execution of the contract.

The contractor shall apply to the PF Authorities, get himself registered and obtain a code number from them. He shall pay the remittances towards PF under his code Number only. The Engineer-in-charge shall on a report having been made by an Inspecting Officer as defined in the Contractors Labour Regulations have the power to deduct from the moneys due to the Contractor any sum required or estimated to be required for making good the loss suffered by a worker or workers by reason of non-fulfillment of the conditions of the contract for the benefit of workers, non - payment of wages or of deductions made from him or their wages which are not justified by the terms of the contract of non-observance of the said contractor's Labour Regulations.

The Contractors shall indemnify the BHEL against any payment to be made under and for observance of the regulation aforesaid without prejudice to his right to claim indemnity from these sub-contractors.

MODEL RULES FOR LABOUR WELFARE

The Contractor shall at his own expense comply with or cause to be complied with model Rules for Labour Welfare as appended to these conditions or rules framed by Government from time to time for the protection of health and for making sanitary arrangements for workers employed directly or indirectly on the works, In case the Contractors fails to make arrangements as aforesaid the Engineer-in-charge shall be entitled do so and recover the cost thereof from the contractor.

NIT Issued By

Mowleeswaran Natesan,
Dy. Manager-Civil, BHEL-EDN

CONTACTOR (SIGN & SEAL)

ENCLOSURE: B

SAFETY CODE

RESPONSIBILITIES OF THE CONTRACTOR IN RESPECT OF SAFETY OF MEN, EQUIPMENT, MATERIAL AND ENVIRONMENT

1. Before commencing the work, contractor shall submits a "SAFETY PLAN" to the authorized BHEL Official. The 'SAFETY PLAN' shall indicate in detail the measure that would be taken by the contractor to ensure safety of men, equipment, material and environment during execution of the work. The plan shall take care to satisfy all requirements specified hereunder. The contractor shall submit Safety Plan along with his offer. During negotiations before placing of work order and during execution of the contract BHEL shall have right to review and suggest modification in the Safety Plan. Contractor shall abide by BHEL decision in this respect.
2. The contractor shall take all necessary safety precautions and arrange for appropriate appliances as per direction of BHEL or its authorized officials to prevent loss of human lives, injuries to personnel engaged, and damage to property and environment.
3. The contractor shall provide to its work force and ensure the use of the following personal protective equipment as found necessary and as directed by the authorized BHEL Officer:-Safety Helmets conforming to IS-2925: 1984.

(i) Safety Belts conforming to IS-3521: 1983.

(ii) Safety Shoes conforming to IS-1989: 1978.

(iii) Eye and Face protection devices conforming to IS-8520: 1977 and IS-8940: 1978.

(iv) Hand and body protection devices conforming to:

IS-2573: 1975

IS-6994: 1973

IS-8807: 1978

IS-8519: 1977

All tools, tackles, lifting appliances, material handling equipment scaffolds, cradles, safety nets, ladders, equipment's etc. used by the contractor shall be of safe design and construction. These shall be tested and certificate of fitness obtained before putting them to use and from time to time as instructed by authorized BHEL Official who shall have the right to ban the use of any item.

All electrical equipment's, connections and wiring for constructions power, its distribution and use shall conform to the requirement of the Indian Electricity Act and Rules. Only electricians licensed by the appropriate statutory authority shall be employed by the contractor to carry out all types of electrical works.

NIT Issued By

Mowleeswaran Natesan,
Dy. Manager-Civil, BHEL-EDN

CONTACTOR (SIGN & SEAL)

All electrical appliances including portable electric tools used by the contractor shall have safe plugging system to source of power and be appropriately earthed. The contractor shall not use any hand lamp energized by electric power with supply voltage of more than 24 volts. For work in confined space lighting shall be arranged with power sources of not more than 24 volts.

The Contractor shall adopt all fire safety measures as laid down in the "Code for fire Safety at Construction Sites" issued by the Safety Department of the Construction Management (HQ) of BHEL and as per directions of the authorized BHEL Official. A copy of the above referred "Code of Fire Safety at the Construction Sites" shall be made available by BHEL to the contractor for reference, on demand by the contractor, during tendering stage itself.

Where it becomes necessary to provide and/or store petroleum products, explosives, chemicals and liquid or gaseous fuel or any other substance that may cause fire or explosion, the contractor shall be responsible for carrying out such provisions and/or storage in accordance with the rules and regulations laid down in the relevant government acts, such as Petroleum Act, Explosives Act, Petroleum and Carbides of Calcium Manual of the Chief Controller of Explosives, Govt. of India. etc., prior approval to the authorized BHEL Official at the site shall also be taken by the contractor in all such matters.

The contractor shall arrange at his cost (wherever not specified) appropriate illumination at all work spots for safe working when natural daylight may not be adequate for clear visibility.

The contractor shall be held responsible for any violation of statutory regulations local, state or central and BHEL instructions that may endanger safety of men, equipment, material and environment in his scope of work or another contractor or agencies. Cost of damages if any, to life and property arising out of such violation of statutory regulations and BHEL instructions shall be borne by the contractor.

In case of a fatal or disabling injury accident to any person at construction sites due to the lapses by the contractor, the victim and/or his/her dependents shall be compensated by the contractor as per statutory requirements. However, if considered necessary, BHEL shall have the right to impose appropriate financial penalty on the contractor and recover the same from payments due to the contractor for suitably compensating the victim and/or his/her dependents. Before imposing any such penalty, appropriate enquiry shall be held by BHEL giving opportunity to the contractor to present his case.

In case of any damage to property by the contractor, BHEL shall have the right to recover cost of such damages from payments from payments due to the contractor after holding an appropriate enquiry.

NIT Issued By

Mowleeswaran Natesan,
Dy. Manager-Civil, BHEL-EDN

CONTACTOR (SIGN & SEAL)

In case of any delay in the completion of a job due to mishaps attributable to lapses buy the contractor; BHEL shall have to recover cost of such delay from payments due to the contractor, after notifying suitably and giving him opportunity to present his case.

If the contractor fails to improve the standards of safety in its operation to the satisfaction of BHEL after being given a reasonable opportunity to do so; and/or if the contractor fails to take appropriate safety precautions or to provide necessary safety devices and equipment or to carry out instructions regarding safety issued by the authorized BHEL Official, BHEL shall have the right to take corrective steps at the risk and cost of the contractor after giving a notice of not less than seven days indicating the steps that would be taken by BHEL.

The contractor shall submit report of all accidents, fires and property damage, dangerous occurrence to the authorized BHEL Official immediately after such occurrence, but in any case not later than twelve hours of the occurrence. Such reports shall be furnished in the manner prescribed by BHEL. In addition, the contractor to the authorized BHEL Official shall also submit periodic reports on safety from time to time as prescribed.

Before commencing the work, the contractor shall appoint/nominate a responsible officer to supervise implementation of all safety measures and liaison with his counterpart of BHEL.

If safety record of the contractor in execution of the awarded job is to the satisfaction of Safety Department of BHEL, issue of an appropriate certificate to recognize the safety performance of the contractor may be considered by BHEL after completion the job

NIT Issued By

Mowleeswaran Natesan,
Dy. Manager-Civil, BHEL-EDN

CONTACTOR (SIGN & SEAL)

SPECIAL CONDITONS OF CONTRACT

1. GENERAL

The special conditions of contract and other contract documents are complimentary to each other and shall be read in conjunction with each other. In case of any conflict of meanings between the special conditions of contract and the BHEL General Conditions of Contract the provisions of the special conditions of contract shall override the corresponding provisions of the BHEL General Conditions of Contract.

2. SCOPE OF WORK

The scope of work includes for the full, final and entire completion **Construction of RCC Inverter Room building and other associated works for 129 MW SPV power plant for SCCL at Telangana** as detailed in specifications and drawings, which forms part of this Contract. The scope of work also includes cleaning/removing all debris in line with bill of quantity as directed by Engineer In-charge. The scope of work under this contract shall cover supply of all materials, labour, tools, and plants etc., unless otherwise specified in the specifications, descriptions of items or in foregoing clauses.

3. SITE CONDITIONS

a) Before tendering the Contractor shall get themselves acquainted with site conditions such as the nature of soil likely to be encountered during the course of the work etc,. The rates quoted by the contractor shall be deemed to have been quoted after getting acquainted with the prevailing site conditions. Initial jungle clearance, stripping of top soil etc., shall also be included in the quoted rates. No claims on the pretext of ignorance of site conditions shall be entertained.

b) The site of work is as mentioned in the Tender document.

4. SITE FACILITES

A. LAND

The Employer will allot land as available free of cost to the contractor for his office stores. He must maintain the areas allotted to him in a neat and clean conditions as required by the Employer. The contractor shall provide adequate storage and office facilities with approval from the Engineer. The rate quoted by the contractor shall be deemed to include for these and no separate payment will be made towards these. On completion of work, the site shall be cleaned by the contractor of all materials, temporary debris, rubbish plants and equipment's, belonging to the contractor at no extra cost. The site and surroundings shall be handed over in a neat and clean condition. In case of any failure by the contractor, the employer will get inside cleared at risk and cost of the Contractor.

NIT Issued By

Mowleeswaran Natesan,
Dy. Manager-Civil, BHEL-EDN

CONTACTOR (SIGN & SEAL)

B. POWER AND WATER SUPPLY

Facilities for drawing Power and water required at site for execution of the works shall be arranged by the contractor at his expense and risk. The necessary source for power & water supply has to be organized by vendor. Necessary distribution box, extension board points duly earthed, and with armoured safe power cables to be laid across the field provided point shall be in the scope of the tenderer. Further, laying of water intake and distribution pipes across the Site to various points of work from Electricity source provided water source point shall be in the scope of the tenderer. If required D.G generation sets shall be provided for Power arrangement by the contractor at his own cost. The tenderer shall make provision for temporary storage of water at suitable locations with pump if required to reach the water supply to work areas. The contractor will have to make his own arrangements for the same, without claiming any extra charge for the power and water drawal and distribution equipment.

5. MACHINERY

The Contractor shall at his own expense, supply all tools, plant and equipment (hereinafter referred to as T & P) required for execution of contract, as specified in the tender documents. whole of the works shall be executed in perfect conformity with the specifications and drawings. If contractor perform any works in a manner contrary to the specifications and drawings and without reference to the Engineer-in-charge, he shall bear all the costs arising or ensuring there from.

a) All technical documents regarding the construction of works are given in the metric system and work should be carried out according to metric system.

b) The work shall be carried out as per detailed drawings supplied by the employer. The working drawings shall be emailed progressively to the contractor free of cost. The contractor shall keep one set of drawings (duly protected from dust and wear and tear) at his own expenses always available at site for reference of Engineer-in-charge and other representatives.

c) The works shall be carried out as per detailed specifications enclosed with the tender. For items for which there is no mention in the drawings, detailed specification relevant IS specification (latest edition) shall be followed.

d) The contractor shall submit to the Employer for their approval complete drawings, of all temporary works and staging which he may require for carrying out the works shown in the drawings.

He shall at the same time if so required by the Employer submit his calculations relating to strength and anticipated deflection in respect of any aforesaid temporary works. He shall also submit for the

approval of Employer drawings showing the methods he proposes to adopt for the erection of the various parts of the temporary works. Any modification to the drawings that may be required by the Employer shall be made by the contractor at his own cost. However, notwithstanding the approval of modification required for temporary works, the contractor shall be fully responsible for their efficiency, security and maintenance and for all obligations and risks in regard to such works, specified or implied in this contract and be shall reinstate the same at his own cost, should any mishap or accident occur causing damage or injury there from, subject however, to such clauses of the General conditions as may be applicable in such cases.

6. BENCH MARKS AND REFERENCE POINTS

The contractor shall construct and maintain proper benchmarks and reference points of the inter section of all main walls, no separate payment shall be made for this and rates quoted deemed to include this cost. Surveying where ever required is in contractor scope.

7. SAFETY PRECAUTIONS

The contractor shall at times observe the safety code and make necessary action as required in the tender. In default thereof, the employer may get this done departmentally or through other agencies and recover the cost from the contractor.

The Contractors shall also abide by all the security regulations promulgated from time to time by employer.

8. RATES

The rates to be quoted are intended to provide for works duly and properly completed in accordance with the general and special conditions of contract and specifications and drawings together with such alteration and/or conditions as may be required / ordered without prejudice to the generality thereof shall include for detail of construction which are obviously and fairly intended and which

may not have been specifically referred in these documents and working drawings and but are essential for execution and satisfactory completion of work including those of minor nature and shall be deemed to include and cover internal the followings.

a) Arrangements for obtaining the clearance wherever required from statutory bodies, regarding license for construction, permanent electricity, water supply, and sanitary connections including payment of necessary fees, inspection charges and obtaining financial certificates for using these services.

The various items rates quoted in the schedule as applicable shall be deemed to include the above services and no separate payments shall be made towards these.

NIT Issued By CONTACTOR (SIGN & SEAL)

Mowleeswaran Natesan,
Dy. Manager-Civil, BHEL-EDN

b) The cost of all superintendence and labour materials, tools, plants, equipment's, mobilizing and demobilizing equipment fuel lubricants, fixture, transport charges, temporary and permanent works and quarrying charges, testing, screening, washing, handling of materials, stacking and removal charges, of any rejected materials and water and power arrangements and satisfactory maintenance of the same satisfactory completion of the work intended.

c) All fees, duties, royalties, rent and compensation to owner for surface damage or taxes and impositions payable to local authorities, in respect of land an structure, for all materials supplied for the work or any other duties/expenses for which the contractor may become liable or may be put to under any provision of the law for the purpose of in connection with the execution of the contract including levies payable on the transactions.

d) Settings out of works profiles etc., and of construction repair and up-keep of all centre lines, bench marks and levels and page there of including provisions of masonry/concrete pillars showing the centre line of structure/gridlines and levels and maintenance and protection of the some including providing fencing etc., throughout the period of contract.

e) Breaking, maintenance and removal of temporary works and buildings.

f) Supply of complete, Moulds, cost of testing of materials etc.

g) Working in all conditions including in/under water liquid, conditions etc., and shall also include bailing or pumping out water from the foundations, basements or any other sources of whatsoever de-sludging and allied operation at any stage of work including all suspension period and delays whatsoever. Cost of curing including pumping and cost of water whatever necessary.

h) In the interest of completion of work within the stipulated time, certain works are to be carried out during the monsoon period also. No separate payment will be made to the contractor for such works and it will be deemed to be included in the contract rates.

i) Diversion and draining works, protection works, temporary facilities, bridges, gangway.

j) Work at all depth in foundation below the ground level and in superstructure up to all height above ground level including all lifts and distances involved at any other place of work and disposed/barrow areas.

k) Unless otherwise specified in the specification schedule cost of all leads/lifts etc.

l) Provision of centering, scaffolding, strutting props etc.,

NIT Issued By

Mowleeswaran Natesan,
Dy. Manager-Civil, BHEL-EDN

CONTACTOR (SIGN & SEAL)

m) All materials and labour required for fencing in a protection against risk of accidents and for providing necessary/planking strutting with hand rails, gumboots, helmets, safety belts etc., during the progress of work.

n) Prevention on trespassing by providing barrier arrangements for the safety of the public or employees during the provision of works.

o) Works in all shapes include and curved all sizes as shown are as required.

p) Cleaning the site after the completion of work all debris, left out construction materials machine equipment's, temporary offices, stores, works shop etc., including dressing the area neat and clean shape.

q) Such other incidental charges or contingencies as may have been provided for in the specifications.

9. LABOUR COLONIES

Labour camp will not permitted within the project premises.

10. ESCALATION

The rates to be quoted by the tenderer shall be firm and shall cover and include all statutory levies, arising from, acts passed by parliament or by state legislature, the rates shall further be deemed to include statutory levies arising from such Acts, Central or State, which may come in to force subsequent to submission of tenders. The tenderer shall note that no claim for enhancement of rates, on the ground that existing statutory levies have been increased, or that new statutory levies have come in to effect after tender, or on any other ground, will be entertained on any account.

11. QUANTITY

The probable quantities of the several items of work are furnished in the schedule of quantities. It must be clearly understood that neither the probable quantities nor the value of individual items nor the aggregate value of the entire work shall be binding on the Employer/Engineer does not in any way assure the contractor or Guarantee that the said probable quantities are correct or that the work will correspond to these. The Employer/Engineer reserve the right to omit, vary or add to the item/work described in the schedule, of quantities and no claim for compensation will be entertaining on this account.

12. VARIATION/DEVIATION IN QUANTITIES

The contractor shall not make any alteration in addition to or omission from the work as described in the tender document except in pursuance of the written instructions of the Engineer-in-charge. No such deviation from the work described in the tender documents shall be valid unless the same has been specifically confirmed and accepted by the accepting officer in writing and incorporated in the contract. The rates quoted are firm.

NIT Issued By CONTACTOR (SIGN & SEAL)

Mowleeswaran Natesan,
Dy. Manager-Civil, BHEL-EDN

13. MATERIALS

BHEL will not supply any materials unless otherwise specified.

14. SUPPLY OF CEMENT, STEEL , PAINT AND OTHER CONSTRUCTION MATERIALS, IS TO BE MADE BY CONTRACTOR

Makes / Source of supply of cement, steel, paint and other construction materials shall be as per approval of BHEL/SCCL/SECI.

15. SUPPLY BY CONTRACTOR

The work is for a completed job including labour and supply of all materials except those otherwise specified in the bid document.
The material and works shall be subject to inspection and test as per field quality plan (FQP) duly approved by BHEL/ SCCL/ SECI.

All materials supplied by the contractor according to the contract conditions shall be subject to inspection and passing by the Engineer-in-charge or his representatives from time to time, the contractor providing all facilities for such instruction free of cost.

BHEL officers connected with the contract shall have the power at any time to inspect and examine any stores or materials intended to be used in or on the work, whether on the site or at any factory or workshop or other place where such stores or materials are being fabricated or manufactured or at any place the same are lying and the contractor shall give necessary facilities for such inspection and examination.

The Engineer-in-charge shall be entitled to have tests made of any stores or materials supplied by the contractor shall provide at his own expense all facilities which the Engineer-in-charge may require for this purpose. If at the discretion of the Engineer-in-charge an independent expert is employed to make any such tests his charges shall be borne by the contractor only if the tests disclosed that the said stores or materials are not in accordance with the provision of the contract.
Should the Engineer-in-charge/Civil Engineer consider at any time during the construction or reconstruction on prior to the expiry of the Maintenance Period that the stores or materials provided by the contractor are unsound or of quality inferior to that contracted for, or otherwise not in accordance with the contract (in respect where the decision of the Engineer-in-charge/Civil Engineer shall be final and conclusive) the contractor shall on demand, in writing from the Engineer-in-charge specifying the stores or materials complained of, not with-standing that the same may have been inadvertently passed, certified that and paid forth with remove the stores or materials so specified and provide other and suitable stores or materials at his own expense, to the entire satisfaction of the Engineer-in-charge/Civil Engineer and in the event of his failing to do so within a period to be specified by the Engineer-in-charge/Civil Engineer, in his demand aforesaid, the Engineer-in-charge/Civil Engineer may replace within the other stores or materials complained of at the risk and expense in all respect of the contractor.

The liability of the contractor under this conditions, shall not extend beyond the maintenance period aforesaid except as regards stores or materials which the Engineer-in-charge/Civil Engineer shall have previously given notice to the contractor to replace (Maintenance period for any work under this organization will be six months from the date of actual completion of the particular work and handing over to BHEL).

NIT Issued By CONTACTOR (SIGN & SEAL)

Mowleeswaran Natesan,
Dy. Manager-Civil, BHEL-EDN

16. INTERRUPTION TO THE WORKS

While quoting the rates/prices the Contractor should take in to account the fact that due to the design or other stipulations at site, or the necessity to follow a particular sequence of overall construction operation, or non-supply of particular drawings, or the connected work or other reasons, interruptions are likely to be encountered in a work of this nature and magnitude. No claims for such interruptions will be entertained on any account.

17. EXTENSION OF TIME OR PENALTY/LIQUIDATED DAMAGES

Extension of time or penalty/liquidated damages as the case may be will be determined as stipulated in clause No. 2.7.9 of BHEL General Conditions of Contract 2019.

18. COMPLETION OF WORK AND MEASUREMENT

a) All work shall be carried out according to authorized dimensions and measurement will be restricted to those authorized dimension even though the Contractor may for convenience of this work exceed the authorized dimensions.

b) All work shall be measured in accordance with the applicable standard method of measurements prescribed by the Indian Standard Institution (1200 latest edition) unless otherwise specified.

c) The Contractor shall admit for technical inspection, works which are likely to be embedded or covered by other works and have the necessary measurement books and certificates to this effect duly signed by the Engineer before the works are covered.

d) On completion of the work, the Contractor must submit to the Engineer the following documents for passing of works.

   i) A copy of the working drawing showing there on all addition and alterations in the process of execution.

   ii) A certificate for embedded and covered up works as in sub-para (C) above

e) The authorized Contractors representative and a representative of the Employer shall jointly sign a certificate of handing over any completed work and date of signature of that certificate will be that the date from which the maintenance period of that unit will reckoned.

f) Notwithstanding the above, insurance cover has to be taken by the contractor for the full value of work as also for the duration of the contract period. 50% of the Security Deposit shall be released only on the total completion of the building and handing over to BHEL to their satisfaction. Remaining 50% of Security Deposit shall be released subject to the stipulation in BHEL's GCC after 6 months from the date of completion of the building.

NIT Issued By

Mowleeswaran Natesan,
Dy. Manager-Civil, BHEL-EDN

CONTACTOR (SIGN & SEAL)

19. MAINTENANCE OF WORK

The contractor will be responsible for the maintenance of works during the period of construction until the various items are taken over, and for a further period of six months, from the date of taking over.

If the contractor fails to maintain the building satisfactorily, it will be got done by other agency and cost towards such maintenance together with departmental charges will be recovered from his bills/dues.

20. SECURITY DEPOSIT

Upon acceptance of the tender, the successful tenderer shall remit the security deposit with Bharat Heavy Electricals Ltd within the time as specified in the Letter of Intent.
The rate of Security Deposit will be 5% of work order value.

The contractor should submit the Security Deposit before the start of the work by

i) Cash (as permissible under the income Tax Act).

ii) Pay order, demand draft in favour of BHEL.

iii) Local cheques of scheduled banks, subject to realization.

iv) Securities available from Post Offices such as National Saving Certificates, Kisan Vikas Patras etc.,(Certificate should be held in the name of contractor furnishing the security and duly pledged in favour of BHEL and discharged on the back).

v) Bank Guarantee from scheduled Banks/Public financial Institutions as defined in the companies Act subject to a maximum of 50% of the total security deposit value. The balance 50% has to be remitted either by cash or in the other form of security. The Bank Guarantee format should have the approval of BHEL.

vi) Fixed Deposit Receipt issued by scheduled Banks/Public Financial Institutions as defined in the Companies Act. The FDR should be in the name of the contractor, A/C BHEL, duly discharged on the back.

vii) Security Deposit can also be recovered at the rate of 10% from the running bills. However in such cases at least 50% of the Security Deposit should be collected before start of the work and balance 50% may be recovered from the running bills.

viii) EMD of the successful tenderer shall be converted and adjusted against the Security Deposit. The Security Deposit shall not carry any interest.

NOTE: Accepting of Security Deposit against Sl. No. (iv) and (vi) above will be subject to hypothecation or endorsement on the documents in favour on BHEL. However, BHEL will not be liable or responsible in any manner for the collection of interest or renewal of the documents or in any other matter connected therewith.
For extra items of work and deviated quantities, security deposit will be recovered at 10% of the value of deviated amount. The security deposit will be released as stipulated under relevant clause of GCC 2019.

NIT Issued By

Mowleeswaran Natesan,
Dy. Manager-Civil, BHEL-EDN

CONTACTOR (SIGN & SEAL)

21. RUNNING ACCOUNT PAYMENTS

During execution of work, monthly payments of all works in place will be made on the basic measurements recorded in measurement sheet/book in respect of items executed but no claim on the account will be entertained, if for any reason payments are not so made. PRICE VARIATION clause not applicable.

22.1 MOBILIZATION ADVANCE/ADVANCE PAYMENT - NOT APPLICABLE

22.2 INTEREST & RECOVERY - NOT APPLICABLE

23. Statutory Deduction towards Income Tax will be made as per rules.

24. In respect of all labour directly or indirectly employed on the work by the Contractor, the Contractor shall comply with the provisions of the contract labour (Regulation and Abolition) Act 1970 or any amendment thereof and all legislations and rules of the State and or Central Government or other Authority, framed from time to time governing the protection of health, sanitary arrangements, wages, welfare and safety for labour employed on building and construction works. The rules and other statutory obligations with regard to fair wages, welfare and safety measures, maintenance of the register etc., will be deemed to be part of the contract.

25. The Contractor is required to take insurance for all workers employed on works towards payment for workmen compensation. The insurance has to be taken out within 15 days of the award of work and has to be produced at the time of signing agreement. Half (1/2%) shall be deducted for every bill if the contractor fails to produce a proof of having taken such an insurance to cover his workmen. However the contractor shall be fully responsible for all the consequences arising out of such default. This may also be read with relevant clauses of BHEL GCC 2019.

25. TIME OF COMPLETION

The date of commencement of work shall be counted from the date of handing over the site to the contractor. It may be clearly understood that time is the essence of the contract and the entire work should be completed within the time imposed in the tender document letter of intent.

26. The Contractor has to pay the Works Contract Tax (Under relevant section of the State Government Act) of their own on Monthly basis.

27. The management of BHEL shall be at liberty to terminate the contract by issuing a month's notice to the contractor without assigning any reason what so ever. As regards unsatisfactory performance or noncompliance with any of the terms & conditions of the contract by the contractor. The management of BHEL shall have the right to terminate the contractor forthwith without notice & rearrange the balance work through other agencies at the risk & cost of the contractor & under such circumstances, the Earnest Money Deposit/Security Deposit paid by the contractor shall stand forfeited.

NIT Issued By

Mowleeswaran Natesan,
Dy. Manager-Civil, BHEL-EDN

CONTACTOR (SIGN & SEAL)

28. SPECIAL CONDITIONS OF TENDER

i) The successful bidder should open local office for Technical staff/Administrative group at Bangalore City for easy interactions/ monitoring of work at site./ Attend meetings at Bangalore city/site as and when instructed by BHEL.

ii) Tenderers should not disclose any price bid details/discounts in the technical bids.

iii) The successful bidder should construct site office / toilets for their workmen at site in consultation with Engineer-in-charge.

29. WORKMEN COMPENSATION POLICY

The contractor is required to take Insurance for all the workers employed on the works towards payments for workmen compensation. The Insurance has to be taken out within 15 days of the award of work and has to be provided at the time of signing the agreement. Half percent (0.5%) of the amount shall be deducted from every bill if the contractor fails to produce a proof of having taken such an insurance to cover his workmen. However the contractor shall be fully responsible for the consequences arising out of such default.

NIT Issued By

Mowleeswaran Natesan,
Dy. Manager-Civil, BHEL-EDN

CONTACTOR (SIGN & SEAL)

LIST OF INDIAN STANDARD

Following is the list of various Indian Standards,
Relevant to the Civil Engg., work

---

1. EARTH WORK

i) IS 1200-1992, Method Part I Earthwork, Measurement of Building, and Civil Engineering works, and chapter No.2 of CPWD/specification 1977.

2. MORTAR (PLASTERING)

1) IS 2394-1984: Code of practice for application of lime plasters finish.
2) IS 1661-1972: Code of practice for application of cement lime plasters finish.
3) IS 2402-1963: Code of practice for external rendered finishes.

3. CONCRETE WORK & RCC WORK

1) IS 456-2000: Code of practice for plain and reinforced concrete.
2) IS 432(part 1) –1982(Third Revision): Mild steel and medium tensile steel bars
3) IS 1766-1998: Cold twisted steel bars for concrete reinforcement.

4. BRICK WORK

1) IS 2212-1991: Code of practice for brick work.

5. STONE WORK

1) IS 1597-1992 (Part – I & II): Code of practice for construction of stone masonry.

6 MARBLE WORK

1) IS 1124-1974: Methods of test for water absorption of natural building works.

7. STEEL WORK

1) IS 800-2007(Third Revision): Code of practice for use of structural steel in general building construction.
2) IS 1308-1984: Steels doors, windows and ventilators
3) IS 1081-1960: Code of practice for fixing glazing of metal (steel & aluminium doors, windows & ventilators)
4) IS 1161-1998: Steel tubes for structural purposes.
5) IS 4351-2003: Steel doorframes.
6) IS-6245-5245-1971: Metal rolling shutters and rolling grills.

NIT Issued By

Mowleeswaran Natesan,
Dy. Manager-Civil, BHEL-EDN

CONTACTOR (SIGN & SEAL)

8. FLOORING

1) IS 2114-1984: Code of practice for laying in situ terrazzo floor finish.
2) IS 2571-1970: Code of practice for in situ cement concrete flooring.
3) IS 5318-1969: Code of practice of lying of flexible P.V.C. sheet & tiles flooring.

9. ROOFING

1) IS 3007(pt-I)-1999: Code of practice of lying of corrugated cement sheets.

10. FINISHING

1) IS 133-2004: Enamel, Interior (a) under coating (b) Finishing colour as required.
2) IS 348-1968: French Polish.
3) IS 427-2005: Distemper, dry colour as required.
4) IS 425-1969: Distemper, oil emulsion as required.
5) IS 5410-1992: Cement paint, Colour as required.
6) IS 5411 (pt.1)-1974: Plastic emulsion paint for interior use.
7) IS 6278-1971: Code of practice for white washing & color washing.

11. DEMOLISION AND DISMANTILING

1) IS 1200 (pt. 18)-1974: Method of measurements of demolition and dismantling.

12. SAFETY CODE

1) IS 5916-1970: Safety code for construction including use of hot bituminous materials.
2) IS 4130-1991: Safety code for demolition of building.
3) IS 3754-1966: Safety code for excavation works.
4) IS 3696(Pt-1)-1987: Safety code for Scaffolds.

A) DISTEMPERING ON NEW SURFACE. (OILBOUND)

1. COAT OF PRIMER	….	0.07 Litre/Sq.m (one coat)
2. COAT OF DISTEMPER	…..	0.10 Kg/Sq.m (2 coats)

DISTEMPERING WITHOUT PRIMER

FOR 1 COAT	……	0.10 Kg/Sq.m (For 1 coat)
FOR 2 COATS	…….	0.15 Kg/Sq.m (For 2 coats)

B) SYNTHETIC ENAMEL PAINT.

a) ON NEW SURFACE	… PRIMER	….	0.09 Litre/Sq.m (For1 coat)
ENAMEL PAINT	(2 COATS)	….	0.15 Litre/Sq.m (For 2 coats)

b) ON OLD SURFACE

NIT Issued By

Mowleeswaran Natesan,
Dy. Manager-Civil, BHEL-EDN

CONTACTOR (SIGN & SEAL)

2 COATS WITHOUT PRIMER … 0.20 Litre/Sq.m

1 COAT … 0.10 Litre/Sq.m

c) WATER PROOF CEMENT PAINT

1 COAT … 0.18 Kg/Sq.m

2 COAT … 0.30 Kg/Sq.m

d) PLASTING EMULSION PAINT:

2 COATS OF PLASTIC EMULSION …. 0.09 Litre/Sq.m

1 COAT OF PLASTIC EMULSION …. 0.073 Litre/Sq.m

ON NEW SURFACE

1 COAT PLASTIC FIX PRIMER … 0.081 Litre/Sq.m

2 COATS PLASTIC EMULSION … 0.09 Litre/Sq.m

These standards are indicative, any additional IS standard/specification required to be followed shall be adhered to by the contractor.

NIT Issued By

Mowleeswaran Natesan,
Dy. Manager-Civil, BHEL-EDN

CONTACTOR (SIGN & SEAL)

FORM OF TENDER

Having examined the invitation to bid, Instructions to Bidder, General conditions of contract, Special conditions, Specifications tender schedule, Contract drawings and other documents for the above work, we the undersigned, offer to construct, erect complete and maintain the whole of the said in conformity with the said bid documents on the terms and conditions and under the provisions set out or called for in the contract documents at the rates listed in the schedule of unit prices or elsewhere in the contract documents.

We undertake if our bid is accepted, to commence the works within 7 days from the date of issue of award and to complete and delivery the whole of the works comprised in the contract as per the time schedule agreed to the contract document.

We agree to abide by this bid for the period of three months from the date fixed for receiving the same and it shall remain binding upon us and may be accepted at any time before expiry of the period.

Until and unless a formal agreement is prepared and executed this bid, together with your award thereof shall constitute a binding contract between us.

NIT Issued By

Mowleeswaran Natesan,
Dy. Manager-Civil, BHEL-EDN

CONTACTOR (SIGN & SEAL)

ENCLOSURE: C

CLAUSE 58 OF GENERAL CONDITIONS OF CONTRACT

ARBITRATION:

Except where otherwise provided for in the contract all questions and disputes relating to the meaning of the specifications, designs, drawings and instructions herein before mentioned and as to the quality of workmanship or materials used on the work or has been other as to any other questions, claim, right, matter or thing whatsoever in any way arising out of or relating to the contract, designs, drawings, specifications, estimates, instructions, orders or these conditions or otherwise concerning the works, of or the execution or failure to execute the same whether arising during the program progress of the work or after the completion or abandonment thereof shall be referred to the sole arbitration of the Executive Director/General Manager of BHEL and if the Managing Executive Director/General Manager Chief Engineer is unable or unwilling to act, to a as the sole arbitration of some other person appointed by the Executive Director / General Manager, willing to act as such Arbitrator. There will be no objection if the arbitrator so appointed is an employee of BHEL EDN or an employee of any other unit of BHEL and that he had to deal with the matters to which the contract relates and that in the course of its his duties as such he had expressed views on all or any of the matters in dispute or difference. The Arbitrator to whom the to matter is originally referred being transferred or by vacating his office or being unable to act for any reason, such Executive Director / General Manager as aforesaid at the time of such transfer, vacation of office or inability to act, shall appoint account another person to act as arbitrator in accordance with the terms of the contract, such person shall be entitled to proceed with the reference from the stage at which it was left by his predecessor. It is also a term of this contract that no person other than a person appointed by such Executive Director/General Manager or an employee appointed as arbitrator as aforesaid should act as arbitrator and the arbitrator shall give reasons for the award.

Subject as aforesaid the provision of the Arbitration Act, 1940 or any statutory modification or re-enactment thereof and the rules made there under and for the time being in force shall apply to the arbitration proceeding under this clause.

NIT Issued By

Mowleeswaran Natesan,
Dy. Manager-Civil, BHEL-EDN

CONTACTOR (SIGN & SEAL)

It is a term of a contract that the party involving invoking arbitration shall specify the dispute or disputes to be referred to arbitration under this clause together with the amount or amounts claimed in respect of each such dispute.

The arbitrator(s) may from time to time with consent of the parties enlarge extend the time, for making the publishing the awards.

The work under the contract shall, if reasonably possible, continue during the arbitration proceeding and no payment due to or payable to the contractor shall be withheld on account of such proceedings.

The arbitrator shall be deemed to have entered on the reference on the date he issued notice to both the parties fixing the date of the hearing.

The arbitrator shall give a separate speaking award in respect of each dispute or difference referred to him.

The venue of arbitration shall be such place as may be fixed by the arbitrator in his sole discretion.

The award of the arbitrator shall be final, conclusive and binding on all parties to this contract.

NIT Issued By

Mowleeswaran Natesan,
Dy. Manager-Civil, BHEL-EDN

CONTACTOR (SIGN & SEAL)

Annexure - I

Certificate by Chartered Accountant on letter head

This is to Certify that M/S ....., (hereinafter referred to as 'company') having its registered office at ..... is registered under MSMED Act 2006, (Entrepreneur Memorandum No (Part–II) ..... dtd:....., Category: ..... (Micro/Small)). (Copy enclosed).

Further verified from the Books of Accounts that the investment of the company as per the latest audited financial year ..... as per MSMED Act 2006 is as follows:

1. **For Manufacturing Enterprises:** Investment in plant and machinery (i.e. original cost excluding land and building and the items specified by the Ministry of Small Scale Industries vide its notification No.S.O.1722(E) dated October 5, 2006 :
   Rs.....Lacs
2. **For Service Enterprises:** Investment in equipment (original cost excluding land and building and furniture, fittings and other items not directly related to the service rendered or as may be notified under the MSMED Act, 2006:
   Rs.....Lacs

(Strike off whichever is not applicable)

The above investment of Rs.....Lacs is within permissible limit of Rs.....Lacs for .....Micro / Small **(Strike off which is not applicable)** Category under MSMED Act 2006.

Or

The company has been graduated from its original category (Micro/ Small) **(Strike off which is not applicable)** and the date of graduation of such enterprise from its original category is ..... (dd/mm/yyyy) which is within the period of 3 years from the date of graduation of such enterprise from its original category as notified vide S.O. No. 3322(E) dated 01.11.2013 published in the gazette notification dated 04.11.2013 by Ministry of MSME.

Date:

(Signature)

Name -

Membership number -

Seal of Chartered Accountant

ANNEXURE II

NIT Issued By

Mowleeswaran Natesan,
Dy. Manager-Civil, BHEL-EDN

CONTACTOR (SIGN & SEAL)

Electronic Funds Transfer (EFT) OR
Paylink Direct Credit Form

Please Fill up the form in **CAPITAL LETTERS** only.
TYPE OF REQUEST(Tick one): _____ CREATE _____ CHANGE

BHEL Vendor / Supplier Code:
Company Name :
Permanent Account Number(PAN):
Address

City: _____ PINCODE _____ STATE _____

Contact Person(s)
Telephone No:
Fax No:
e-mail id:

1 Bank Name:
2 Bank Address:
3 Bank Telephone No:
4 Bank Account No:
5 Account Type: Savings/Cash Credit
6 9 Digit Code Number of Bank and branch appearing on MICR cheque issued by Bank
7 Bank swift Code(applicable for EFT only)
8 Bank IFSC code(applicable for RTGS)
9 Bank IFSC code(applicable for NEFT)

A I hereby certify that the particulars given above are true, correct and complete and that I, as a representative for the above named Company, hereby authorise BHEL, EDN, Bangalore to electronically deposit payments to the designated bank account.
B If the transaction is delayed or not effected at all for reasons of incomplete or incorrect information, I would not hold BHEL / transfering Bank responsible.
C This authority remains in full force until BHEL, EDN,Bangalore receives written notification requesting a change or cancellation.
D I have read the contents of the covering letter and agree to discharge the resposibility expected of me as a participant under ECS / EFT.

Date:

Authorised Signatory:
Designation: Telephone NO. with STD Code

Company Seal

Bank Certificate

We certify that_____has an Account No_____ with us and we confirm that the bank details given above are correct as per our records.

Date: (……..)
Place: Signature

Please return completed form along with a blank cancelled cheque or photocopy thereof to:
Bharath Heavy Electricals Ltd,
Attn:
Electronics Division, Mysore Road,
BANGALORE - 560 026
In case of any Querry, please call : 080-26998xxx / 2674xxxx or fax no. 080-2674xxxx

ANNEXURE-III

NIT Issued By CONTACTOR (SIGN & SEAL)

Mowleeswaran Natesan,
Dy. Manager-Civil, BHEL-EDN

Ref.
Date:

SITE INSPECTION CERTIFICATE

This is to Certify that, I / We…….

……. had inspected the proposed

Construction site thoroughly and understood the scope of works to be carried out in

line with construction drawings/designs/data/Bill of quantities/schedule of items /

Specifications as brought out in the Tender as desired by BHEL.

Agreeable to all Terms & Conditions of Contract and assure to complete the work

Within the stipulation time frame.

Signature of the contractor

Name:
Seal

NIT Issued By

Mowleeswaran Natesan,
Dy. Manager-Civil, BHEL-EDN

CONTACTOR (SIGN & SEAL)

Additional Clauses for GST:

1. BHEL GST Number of Nodal Agency:

   Nodal Unit Registered as Supplier of Goods/Services in GST: Telangana
   GSTIN of Nodal Unit: Will be intimated later after award of work.

2. HSN (Harmonized System of Nomenclature) / SAC (Services Accounting Code) to be mandatorily mentioned in all quotations & invoices submitted.

3. Invoice submitted should be in the format as specified under GST Laws viz. all details as mentioned in Invoice Rules like GSTN registration number, invoice number, quantity, rate, value, taxes with nomenclature – CGST, SGST, IGST mentioned separately, HSN Code / SAC Code etc.

4. Payment of GST to vendors as applicable will be made only if it is matching with data uploaded by Vendors

5. Vendors to give undertaking that GST as mentioned in the Invoice has been paid/will be paid either through cash or admissible input credit and also file the returns

6. For invoices paid on Reverse charge basis – that it is “payable on reverse charge basis” to be mentioned on the invoice.

7. With respect to supplies, vendor should intimate BHEL immediately on dispatch for parallel billing on customer

8. Vendor should get GST registration, if not available, in the state of Telangana immediately after placement of order.

NIT Issued By

Mowleeswaran Natesan,
Dy. Manager-Civil, BHEL-EDN

CONTACTOR (SIGN & SEAL)

UNPRICED PRICE BID (30MW MANUGURU)

MMS PILE FOUNDATION WORKS, MMS COLUMN, SUPERSTRUCTURE AND MODULE ERECTION, PILE LOAD TEST & LAND LEVELLING WORKS AND OTHER ASSOCIATED WORKS AT 30MW (AC) SPV POWER PLANT AT MANUGURU, TELANGANA.

SL. NO.	DESCRIPTION	UNIT	QTY	ITEM RATE (Excluding GST)	AMOUNT
1	Boring (with DTH/drilling machine) in any kind of soil/rock, providing and installing bored cast-in-situ reinforced/Plain cement concrete piles of grade M-25 of specified diameter and length below the pile cap, to carry a safe working load not less than specified, excluding the cost of steel reinforcement but including the cost of concrete, marking of pile location as per approved drawing with total station machine, boring, with bentonite solution and temporary casing of appropriate length for setting out and removal of same and the length of the pile to be embedded in the pile cap etc. all complete, (Cement Content shall be as per approved MIX DESIGN by BHEL/Owner) including removal of excavated earth with all lifts and leads (Length of pile for payment shall be measured upto bottom of pile cap). 300 mm dia piles,	Meter	32467.00	1193.283	38742311.00
2	Providing and laying in position machine batched and machine mixed design mix M-25 grade cement concrete for reinforced/Plain cement concrete work, using cement content as per approved design mix, including pumping of concrete to site of laying but excluding the cost of centering, shuttering, finishing and reinforcement, including admixtures in recommended proportions as per IS: 9103 to accelerate, retard setting of concrete, improve workability without impairing strength and durability as per direction of Engineer-in-charge (Cement Content shall be as per approved MIX DESIGN by BHEL/Owner).All works upto plinth level : MMS PILE CAP APPROX. HEIGHT 200MM FROM GL	Cum	971.00	5105.588	4957527.00
3	Centering and shuttering including strutting, propping etc. and removal of form for all heights : Foundations, footings, bases of columns, etc. for mass concrete	sqm	11461.00	153.608	1760506.00
4	Erection of Columns, Erection and Alignment of Column (structure legs) in plumb, as per the Co-ordinates of BHEL MMS coordinate drawing, inside pile foundation before pouring of concrete complete in all respect including template etc,collecting of columns material from store,shifting to work location,unpacking, disposal of unwanted packing material at identified location as per instruction of Engineer in charge. Complete all. (SUPPLY OF COLUMN MATERIAL IS IN BHEL SCOPE)	Tones	588.00	8141.166	4787006.00
5	Erection of Structure material using required fasteners as per BHEL GA-Drawing.Assembly to mentioned inclinated angle ,tightening of accessories using tools at mentioned torque including collecting structure material from store,shifting to work location,unpacking, disposal of unwanted packing material at identified location as per instruction of Engineer in charge complete all. (SUPPLY OF STRUCTURE MATERIAL AND FASTENERS IS IN BHEL SCOPE)	Tones	1332.00	1954.134	2602907.00
6	Erection of modules,placing,tightening using tools at desired/designed torque..(size approximately 1966 x 986 x 35 mm, Approx. Weight: 25 kg). including Erection bolts & nuts as per drawing and collecting module from BHEL STORE unpacking,shifting to work location, storing of modules packing material at identified location and handing over to BHEL as per instruction of Engineer In-charge, lead upto 5 KM (BHEL WILL SUPPLY PV MODULES & FASTENERS) all complete.	Nos	103000.00	18.369	1892007.00
7	Earth work in excavation by mechanical means (Hydraulic excavator, dozer, etc.,)/ manual means over areas (any depth. 1.5m in width as well as 10 sqm on plan) including, rolling, watering, compaction, & getting out & disposal of excavated earth, lead upto 5 km and lift upto 1.5m, disposed earth to be levelled, rolled/neatly dressed as per direction of Engineer-in -charge.all kind of soil	Cum	52813.00	99.752	5268224.00
8	Earth work in excavation by mechanical means (Hydraulic excavator, dozer, etc.,)/ manual means over areas (any depth. 1.5m in width as well as 10 sqm on plan) including, rolling, watering, compaction, & getting out & disposal of excavated earth, lead upto 5 km and lift upto 1.5m, disposed earth to be levelled, rolled/neatly dressed as per direction of Engineer-in -charge. Ordinary rock.	Cum	100.00	175.072	17508.00

CONTACTOR (SIGN AND SEAL)

UNPRICED PRICE BID (30MW MANUGURU)

MMS PILE FOUNDATION WORKS, MMS COLUMN, SUPERSTRUCTURE AND MODULE ERECTION, PILE LOAD TEST & LAND LEVELLING WORKS AND OTHER ASSOCIATED WORKS AT 30MW (AC) SPV POWER PLANT AT MANUGURU, TELANGANA.

SL. NO.	DESCRIPTION	UNIT	QTY	ITEM RATE (Excluding GST)	AMOUNT
9	Filling and banking with excavated earth in layers not exceeding 20 cm in depth, breaking clods, watering, rolling each layer with ½ tonne roller or wooden or steel rammers, and rolling every 3rd and top-most layer with power roller of minimum 8 tonnes and dressing up in embankments for roads, flood banks, marginal banks and guide banks or filling up ground depressions, lead upto 5km and lift upto 1.5 m (compaction as per required MDD minimum 95% as per approved FQP issued by BHEL): All kinds of soil.	Cum	5868.00	338.897	1988647.00
10	Finishing pile cap with water proofing cement paint of required shade :New work (Two or more coats applied @ 3.84 kg/10 sqm).	sqm	7959.00	46.570	370648.00
11	Demolishing cement concrete manually/ by mechanical means including disposal of material within 5km/away from plant premises lead as per direction of Engineer - in- charge. Nominal concrete 1:3:6 or richer mix (i/c equivalent design mix)	Cum	25.00	789.664	19742.00
12	Demolishing brick work /RRM manually/ by mechanical means including stacking of serviceable material and disposal of unserviceable material within 5km/away from plant premises lead as per direction of Engineer-in-charge.	Cum	25.00	667.458	16687.00
13	Demolishing R.C.C. work manually/ by mechanical means including stacking of steel bars and disposal of unserviceable material within 5km/away from plant premises lead as per direction of Engineer - in-charge.	Cum	25.00	1152.004	28801.00
14	Extra for cutting reinforcement bars manually/ by mechanical means in R.C.C. or R.B. work (Payment shall be made on the cross sectional area of R.C.C. or R.B. work) as per direction of Engineer -in -charge.	sqm	50.00	396.634	19832.00
15	Vertical load testing(initial) of piles in accordance with IS 2911(part-4) including installation of loading platform and preparation of pile head or construction of test cap and dismantling of test cap after test etc. complete as per specification and upto 50 tonne capacity pile. all complete as per the direction of engineer in charge	Nos	6.00	4045.500	24273.00
16	Pull out load testing (initial) of piles in accordance with IS 2911(part-4) including installation of loading platform and preparation of pile head or construction of test cap and dismantling of test cap after test etc. complete as per specification and upto 50 tonne capacity pile. all complete as per the direction of engineer in charge	Nos	6.00	4045.500	24273.00
17	Lateral load testing(initial) of single pile in accordance with IS:2911 (Part-4) for determining safe allowable lateral load on pile upto 50 tonne capacity as per direction of engineer in charge	Nos	6.00	4045.500	24273.00
18	Vertical load testing of piles in accordance with IS 2911(part-4) including installation of loading platform and preparation of pile head or construction of test cap and dismantling of test cap after test etc.Routine test (test load 1.5 times the safe capacity) complete as per the direction of engineer in charge	Nos	361.00	246.780	89088.00
19	Uplift testing of piles in accordance with IS 2911(part-4) including installation of loading platform and preparation of pile head or construction of test cap and dismantling of test cap after test etc. Routine test (test load 1.5 times the safe capacity) complete as per the direction of engineer in charge	Nos	361.00	246.780	89088.00
20	Lateral load testing of single pile in accordance with IS:2911 (Part-4) for determining safe allowable lateral load on pile.Routine test (as per design load) complete as per the direction of engineer in charge	Nos	361.00	246.780	89088.00
				TOTAL AMOUNT:	**Rs. 62,812,436.00**
QUOTE PERCENTAGE (%) ABOVE/BELOW (+/-) (OR) AT PAR TO TOTAL AMOUNT					**XXXXX**
QUOTED PERCENTAGE (%) IN WORDS ABOVE/BELOW (OR) AT PAR TO TOTAL AMOUNT					**XXXXX**
Plus applicable GST					

NOTE:
1. CONTRACTOR SHOULD QUOTE PERCENTAGE (%) ABOVE/BELOW (OR) AT PAR TO TOTAL AMOUNT
2. QUOTED PERCENTAGE (%) IS APPLICABLE ON ALL ITEM RATES UNIFORMLY.

CONTACTOR (SIGN AND SEAL)

UNPRICED PRICE BID (10MW STPP PEGADAPALLY)

MMS PILE FOUNDATION WORKS, MMS COLUMN, SUPERSTRUCTURE AND MODULE ERECTION, PILE LOAD TEST & LAND LEVELLING WORKS AND OTHER ASSOCIATED WORKS AT 10MW (AC) SPV POWER PLANT AT STPP PEGADAPALLY, TELANGANA.

SL. NO.	DESCRIPTION	UNIT	QTY	ITEM RATE (Excluding GST)	AMOUNT
1	Boring (with DTH/drilling machine) in any kind of soil/rock, providing and installing bored cast-in-situ reinforced/Plain cement concrete piles of grade M-25 of specified diameter and length below the pile cap, to carry a safe working load not less than specified, excluding the cost of steel reinforcement but including the cost of concrete, marking of pile location as per approved drawing with total station machine, boring, with bentonite solution and temporary casing of appropriate length for setting out and removal of same and the length of the pile to be embedded in the pile cap etc. all complete, (Cement Content shall be as per approved MIX DESIGN by BHEL/Owner) including removal of excavated earth with all lifts and leads (Length of pile for payment shall be measured upto bottom of pile cap). 300 mm dia piles,	Meter	10552.00	1193.282	12591513.00
2	Providing and laying in position machine batched and machine mixed design mix M-25 grade cement concrete for reinforced/Plain cement concrete work, using cement content as per approved design mix, including pumping of concrete to site of laying but excluding the cost of centering, shuttering, finishing and reinforcement, including admixtures in recommended proportions as per IS: 9103 to accelerate, retard setting of concrete, improve workability without impairing strength and durability as per direction of Engineer-in-charge (Cement Content shall be as per approved MIX DESIGN by BHEL/Owner).All works upto plinth level : MMS PILE CAP APPROX. HEIGHT 200MM FROM GL	Cum	314.00	5105.588	1603155.00
3	Centering and shuttering including strutting, propping etc. and removal of form for all heights : Foundations, footings, bases of columns, etc. for mass concrete	sqm	3712.00	153.608	570195.00
4	Erection of Columns, Erection and Alignment of Column (structure legs) in plumb, as per the Co-ordinates of BHEL MMS coordinate drawing, inside pile foundation before pouring of concrete complete in all respect including template etc,collecting of columns material from store,shifting to work location,unpacking, disposal of unwanted packing material at identified location as per instruction of Engineer in charge. Complete all. (SUPPLY OF COLUMN MATERIAL IS IN BHEL SCOPE)	Tones	198.00	8141.166	1611951.00
5	Erection of Structure material using required fasteners as per BHEL GA-Drawing.Assembly to mentioned inclinated angle ,tightening of accessories using tools at mentioned torque including collecting structure material from store,shifting to work location,unpacking, disposal of unwanted packing material at identified location as per instruction of Engineer in charge complete all. (SUPPLY OF STRUCTURE MATERIAL AND FASTENERS IS IN BHEL SCOPE)	Tones	466.00	1954.134	910627.00
6	Erection of modules,placing,tightening using tools at desired/designed torque..(size approximately 1966 x 986 x 35 mm, Approx. Weight: 25 kg). including Erection bolts & nuts as per drawing and collecting module from BHEL STORE unpacking,shifting to work location, storing of modules packing material at identified location and handing over to BHEL as per instruction of Engineer In-charge, lead upto 5 KM (BHEL WILL SUPPLY PV MODULES & FASTENERS) all complete.	Nos	33360.00	18.369	612790.00
7	Earth work in excavation by mechanical means (Hydraulic excavator, dozer, etc.,)/ manual means over areas (any depth. 1.5m in width as well as 10 sqm on plan) including, rolling, watering, compaction, & getting out & disposal of excavated earth, lead upto 5 km and lift upto 1.5m, disposed earth to be levelled, rolled/neatly dressed as per direction of Engineer-in -charge.all kind of soil	Cum	20506.00	99.752	2045523.00
8	Earth work in excavation by mechanical means (Hydraulic excavator, dozer, etc.,)/ manual means over areas (any depth. 1.5m in width as well as 10 sqm on plan) including, rolling, watering, compaction, & getting out & disposal of excavated earth, lead upto 5 km and lift upto 1.5m, disposed earth to be levelled, rolled/neatly dressed as per direction of Engineer-in -charge. Ordinary rock.	Cum	100.00	175.072	17508.00

CONTACTOR (SIGN AND SEAL)

UNPRICED PRICE BID (10MW STPP PEGADAPALLY)

MMS PILE FOUNDATION WORKS, MMS COLUMN, SUPERSTRUCTURE AND MODULE ERECTION, PILE LOAD TEST & LAND LEVELLING WORKS AND OTHER ASSOCIATED WORKS AT 10MW (AC) SPV POWER PLANT AT STPP PEGADAPALLY, TELANGANA.

SL. NO.	DESCRIPTION	UNIT	QTY	ITEM RATE (Excluding GST)	AMOUNT
9	Filling and banking with excavated earth in layers not exceeding 20 cm in depth, breaking clods, watering, rolling each layer with ½ tonne roller or wooden or steel rammers, and rolling every 3rd and top-most layer with power roller of minimum 8 tonnes and dressing up in embankments for roads, flood banks, marginal banks and guide banks or filling up ground depressions, lead upto 5km and lift upto 1.5 m (compaction as per required MDD minimum 95% as per approved FQP issued by BHEL): All kinds of soil.	Cum	2279.00	338.897	772346.00
10	Finishing pile cap with water proofing cement paint of required shade :New work (Two or more coats applied @ 3.84 kg/10 sqm).	sqm	2578.00	46.570	120057.00
11	Demolishing cement concrete manually/ by mechanical means including disposal of material within 5km/away from plant premises lead as per direction of Engineer - in- charge. Nominal concrete 1:3:6 or richer mix (i/c equivalent design mix)	Cum	25.00	789.664	19742.00
12	Demolishing brick work /RRM manually/ by mechanical means including stacking of serviceable material and disposal of unserviceable material within 5km/away from plant premises lead as per direction of Engineer-in-charge.	Cum	25.00	667.458	16687.00
13	Demolishing R.C.C. work manually/ by mechanical means including stacking of steel bars and disposal of unserviceable material within 5km/away from plant premises lead as per direction of Engineer - in-charge.	Cum	25.00	1152.004	28801.00
14	Extra for cutting reinforcement bars manually/ by mechanical means in R.C.C. or R.B. work (Payment shall be made on the cross sectional area of R.C.C. or R.B. work) as per direction of Engineer -in -charge.	sqm	50.00	396.634	19832.00
15	Vertical load testing(initial) of piles in accordance with IS 2911(part-4) including installation of loading platform and preparation of pile head or construction of test cap and dismantling of test cap after test etc. complete as per specification and upto 50 tonne capacity pile. all complete as per the direction of engineer in charge	Nos	12.00	4045.500	48546.00
16	Pull out load testing (initial) of piles in accordance with IS 2911(part-4) including installation of loading platform and preparation of pile head or construction of test cap and dismantling of test cap after test etc. complete as per specification and upto 50 tonne capacity pile. all complete as per the direction of engineer in charge	Nos	12.00	4045.500	48546.00
17	Lateral load testing(initial) of single pile in accordance with IS:2911 (Part-4) for determining safe allowable lateral load on pile upto 50 tonne capacity as per direction of engineer in charge	Nos	12.00	4045.500	48546.00
18	Vertical load testing of piles in accordance with IS 2911(part-4) including installation of loading platform and preparation of pile head or construction of test cap and dismantling of test cap after test etc.Routine test (test load 1.5 times the safe capacity) complete as per the direction of engineer in charge	Nos	117.00	246.780	28874.00
19	Uplift testing of piles in accordance with IS 2911(part-4) including installation of loading platform and preparation of pile head or construction of test cap and dismantling of test cap after test etc. Routine test (test load 1.5 times the safe capacity) complete as per the direction of engineer in charge	Nos	117.00	246.780	28874.00
20	Lateral load testing of single pile in accordance with IS:2911 (Part-4) for determining safe allowable lateral load on pile.Routine test (as per design load) complete as per the direction of engineer in charge	Nos	117.00	246.780	28874.00
				TOTAL AMOUNT:	**Rs. 21,172,987.00**
QUOTE PERCENTAGE (%) ABOVE/BELOW (+/-) (OR) AT PAR TO TOTAL AMOUNT					**XXXXX**
QUOTED PERCENTAGE (%) IN WORDS ABOVE/BELOW (OR) AT PAR TO TOTAL AMOUNT					**XXXXX**
Plus applicable GST					

NOTE:
1. CONTRACTOR SHOULD QUOTE PERCENTAGE (%) ABOVE/BELOW (OR) AT PAR TO TOTAL AMOUNT
2. QUOTED PERCENTAGE (%) IS APPLICABLE ON ALL ITEM RATES UNIFORMLY.

CONTACTOR (SIGN AND SEAL)

TECHNICAL AND GENERAL SPECIFICATION

A. Civil, Mechanical and Plumbing Works

1. General Requirements

1.1 This section of Technical Specifications describes detailed technical and functional requirements of all civil, structural, mechanical & plumbing works included in the scope.

1.2 Standards & Codes

1.2.1 All design and construction of civil works shall conform to relevant Indian standards such as BIS, IRC, MORTH, NBC etc.

1.2.2 Design of steel structures shall conform to IS: 800, 801 or 802 as applicable. Design of concrete structures shall conform to IS: 456. For design of liquid retaining structure IS: 3370 shall be followed. Only in case of non-availability of Indian standard, equivalent American or British standard may be used for design with prior approval of the Engineer and the contractor shall submit proper justification for the same along with his request to the Engineer for review and approval, and the decision of the Engineer shall be final and binding.

1.2.3 All the design/ drawings shall be prepared/ approved either by in-house Engineering Team of the contractor (or by his Engineering Consultant) with qualified engineering staff with relevant experience in successful design of solar SPV plants.

1.2.4 The design calculations for MMS, RCC structure, Steel structure, Foundation system, Road work, Drainage work, etc. shall be submitted for prior approval of Engineer before commencement of construction.

1.2.5 As per project requirements, the Employer may ask for approval of all civil designs and drawings by a Chartered Civil/ Structural Engineer.

1.3 The design calculations shall be supplemented with a neat sketch showing the structure geometry, node and member nos., lengths of various typical members, support points and type of supports, types of materials & type of sections with properties considered in analysis & design. The report shall also include back-up calculations for various loads adopted in design, brief write-up on primary load cases and design load combinations considered and conclusions on design results (with supporting sketches) for easy reference and clarity. Where a computer program (other than STAAD) is used for analysis and design, the contractor shall include a write-up on the computer program used along with examples for validation check. Design Input (format suitable to the programme used and also in STAAD format) and output file shall also be given in the design report and in soft copy to facilitate its review and approval by the Engineer.

1.4 The methodology for construction of MMS and its foundations, Road & drainage works and Procedure for pile load test shall also be submitted for prior approval of Engineer before start of these works.

2. Topographical Surveys

2.1 The contractor shall be responsible for detailed Topographical Survey of the proposed project site. The work shall be carried out through an agency with relevant experience and qualified survey team.

2.2 The Topographical survey shall be conducted at 20m x 20m grid, or as directed by the Engineer, with the help of digital surveying instruments like Total Station.
2.3 The Contractor shall carry the Bench Mark from nearest GTS Bench mark or any other established source like Railway station, Permanent PWD/ WRD structure etc. as approved by the Engineer, by fly-levelling and establish two permanent bench marks (PBM) at site. All subsequent transfer of levels shall be carried out with respect to these PBMs. The work shall also include constructing permanent reference pillars (RP) at suitable locations as directed by the Engineer. These reference pillars shall be labelled permanently with their respective coordinates and reduced levels for future use. The Permanent Bench Marks (PBM) and reference pillars (RP) shall be shown on the survey drawings.

2.4 While carrying bench mark to the project site, levels shall also be established on the permanent objects like culverts etc. at least on one object in every 1 (one) km if available along with route with adequate description about the objects. These levels shall be maintained at site & also mentioned in the survey report to facilitate locating these objects later on.

2.5 The survey work shall be carried out in UTM grid system. The contractor shall also establish the latitudes and longitudes of all the corners of the project site. At least 50m width of the adjoining plots and surrounding areas shall also be covered in the survey for correlation with adjoining plots and facilities. The grids for the survey work shall be established in N-S & E-W direction (corresponding to Geographical North or Plant North) as directed by the Engineer.

2.6 Positions, both in plan and elevation, of all natural and artificial features in the area like waterways, railway tracks, trees, cultivation, houses, fences, pucca and kutcha roads including culverts and crossings, foot tracks, other permanent objects like telephone posts and transmission towers etc. are to be established and subsequently shown on survey maps by means of conventional symbols (preferably symbols of survey of India Maps). All hills and valleys within the area/areas are to be surveyed and plotted on maps by contours. Any unusual condition or formation on the ground, locations of rock outcrops (if visible on the surface) and springs/falls, sand heap/dune, possible aggregate deposits etc. shall also be noted and plotted on contour maps.

2.7 The record of measurement of all Reduced Levels (RL) shall be submitted in digital format, (in x, y z coordinate system) along with preliminary contour plan of the site, for Engineer's review before submission of final contour map. The contour interval shall be as required for proper representation of the topography however it shall not be more than 0.5m. The Contractor shall submit survey maps of the site in 1:10,000 scale indicating grid lines and contour lines, demarcating all permanent features like roads, railways, waterways, buildings, power lines, natural streams, trees, sand dunes etc. Present use of the site i.e. mining, quarrying, agriculture etc., existing drainage pattern of the site, possibility of water logging and high flood level of the area shall also be captured in the document. The project plot boundary with coordinates of all corner points along with coordinate grid of 50m x 50m interval shall be marked on the contour map.

3. Geotechnical Investigations

3.1 The contractor shall be responsible for detailed Geotechnical investigations at the proposed project site for the purpose of foundation design for various buildings, structures, HT lines, MMS etc. and other design/ planning requirements. The investigation work shall be carried out through any Govt. approved/ NABL accredited agency. The contractor shall submit the credentials of the proposed agency along with relevant certificates in support thereof for verification/ approval of the Investigation Agency by the Engineer.

3.2 The scope of work includes execution of complete soil exploration including boring and drilling, standard penetration test (SPT), collecting disturbed (DS) and undisturbed samples (UDS), collecting ground water samples, trial pits, electrical resistivity tests (ERT), field & laboratory CBR tests, conducting laboratory tests on collected samples of soil & ground water and preparation and submission of report. SPT shall be carried out in all types of soil deposits and in all rock formations with core recovery up to 20% met within a borehole. SPT test shall be conducted at every 1.5m interval or at change of strata. The starting depth of SPT shall be 0.5m from ground level. UDS shall be collected at every 1.5m interval or at change of strata.

3.3 The field investigations shall mainly include drilling of min. 5m deep boreholes (50% of total No. of boreholes shall be 10m deep), conducting SPT and collecting Disturbed (DS) and Undisturbed samples (UDS), conducting in-situ CBR test for approach road to the plant, internal roads & peripheral road; Trial pits if specified (min 2mx2mx2.5m deep) and ERT s. Number and location of bore holes, CBR tests and Trial pits shall be decided as per the project layout, site topography and soil conditions in consultation with the Employer. There shall be minimum 1 nos. of Borehole per 5 acres of the area (However, total number of boreholes shall not be less than 5), 3 nos. of Trial pits, 5 nos. of CBR test & ERT, 5 nos. of Ground water samples for laboratory investigations. The soil/ rock samples for laboratory investigations shall be collected from each borehole and trial pit in sufficient nos. (Note- In case the project plot is divided in to number of discrete blocks separated from each other, min. 3 nos. of bore holes, 2 trial pits, 3 ERT and 3 CBR tests shall be taken per such block).

3.4 The proposed Geotechnical investigation plan indicating proposed locations of Trial pits, Boreholes, CBR test & ERT shall be submitted to the Employer for review and approval before start of work.

3.5 Laboratory tests shall be conducted on DS & UDS samples and ground water samples in sufficient no. & shall include, Soil classification, Grain size analysis including Hydrometer analysis, determination of Bulk and dry density, Specific gravity, Natural moisture content, Atterberg limits, Tri-axial shear tests (UU), Undrained shear test, Consolidation tests, Unconfined compression tests, Free swell index, chemical analysis of soil and water samples to determine the carbonates, sulphates, chlorides, nitrates, pH, Organic matter and any other chemicals harmful to concrete and reinforcement/ steel. Laboratory tests on rock samples shall be carried out for Hardness, Specific Gravity, Unit Weight, Uniaxial Compressive Strength (in-situ & saturated), Slake Durability etc. Laboratory CBR test on soaked samples shall also be conducted on min. 5 no. of soil samples to ascertain the suitability of soil for sub-grade and requirement of any treatment of subgrade soil in case of CBR <2% as per IRC requirements.

3.6 After completion of field and laboratory work, the contractor shall submit a Geotechnical Investigation Report for Engineer's approval. All bore log details and lab test results shall be presented in the report as per provisions of relevant BIS standards indicating BH coordinates, Existing GL, Depth of water table, Method of drilling etc. The report shall

include a Map showing the locations of various field tests including coordinates, calculations and recommendations for foundation type and safe bearing capacity (SBC) for various Plant buildings (ICR, MCR etc.) and Open installations, Switch Yard structures & Sub-Station (as applicable), Transformer foundation, HT lines (as applicable), MMS foundation etc. corresponding to settlement of 25mm & 40mm.

3.7 The report shall include the study for "Liquefaction potential assessment of the ground and suggestions for any ground improvement measures" as required.

3.8 The report shall also include ground water analysis (water sample collected from bore well) to ascertain its suitability for construction purposes, recommendations for type of cement, grade of concrete & minimum cement content as per prevalent soil characteristics with respect to presence of aggressive chemicals and environment exposure conditions as per relevant BIS specifications. However, minimum grade of concrete shall be M25 (M30 in coastal areas/ marshy soil) for all RCC works except liquid retaining structures like underground water tank etc. where minimum grade of concrete shall be M30 (M35 in coastal areas/ marshy soil). Cement higher than 43 Grade, shall not be used in construction.

3.9 In case the contractor wishes to adopt concrete pile foundation for MMS supports the Geo-tech. report shall also include the calculations for safe pile capacity under direct compression, lateral load and pull out. The report shall include recommendations about type of pile, its depth and dia. to be used.

3.9.1 In coastal areas and in marshy or swelling type soil, under reamed or driven precast concrete pile shall be used. In case contractor wishes to use helical piles the design, fabrication and installation shall conform to IBC (International building code).

3.9.2 The contractor shall carry out field trials for initial load test on pile to verify the pile design to confirm the safe load carrying capacity under direct compression, Lateral load and Pull out.

3.9.3 The nos. of piles to be tested under each category shall be finalized corresponding to geotechnical characteristics at site, plot area etc. However, minimum 5 nos. of piles shall be tested (min. 3 nos. in each block if the plant site is divided in discrete blocks separated from each other) under each category of load.

3.9.4 The locations of test piles shall be distributed over the plant site and to be finalized in consultation with Engineer. In case the MMS column is fixed using base plate anchor bolt assembly, the adequacy of provided pile reinforcement in job (working) pile corresponding to the set of test loads shall be reviewed by the contractor for any additional requirement of reinforcement and the same shall be provided in the pile to be cast for initial load test.

3.9.5 In case the Contractor proposes to embed the Column leg in the pile for fixing, the test pile shall be provided with embedded column leg as per approved design and any dowels as required for application of test load. The drawing for the Test pile shall be submitted to Engineer for his approval before casting the test pile. The load test on pile shall be conducted after min. of 28 days from the date of casting. In case the contractor desires to conduct the test earlier than 28 days, he may use suitable higher-grade concrete or if there is substantial evidence from earlier cube test results on design grade concrete to demonstrate the early gain of required compressive strength prior to application of the test load.

3.9.6 However, under no circumstances the test shall be conducted before 15 days of the date of casting the pile. All the dial gauges and hydraulic jack assembly shall be properly calibrated as per the requirements of relevant BIS standards and valid calibration certificate to this effect from Govt. / NABL accredited Test agency shall be submitted to the Engineer before use.

3.9.7 The contractor shall submit detailed methodology for conducting the tests in line with IS: 2911 (Part 4) for Engineer's approval before commencement of any test. After completion of these tests the contractor shall compile the test results and submit the report in a proper format as specified in the BIS standard with recommendations/ conclusions for Engineer's approval. The pile work shall start only after approval of the final pile design duly verified/ confirmed with initial load test results.

3.10 All buildings/ Open installations (MCR, ICR etc.), Switchyard and Sub-station area shall have levelled ground. No foundation for MMS, Buildings, Switch yard equipment & structures, Sub-stations, HT Line Towers, Transformer etc. shall rest on filled up ground. However, minor structures like cable trench, cable rack, pipe pedestal etc. may rest in filled up soil with max. safe bearing capacity for design consideration not more than 3 T/m^2.

4. Other Investigations

4.1 The contractor shall also obtain and study other input data at proposed project site for design of the project from metrological department/ local govt. authorities. This shall include data related to Rainfall, Maximum & Minimum ambient Temperature, Humidity, HFL etc.

4.2 The contractor shall carry out Shadow Analysis at proposed site and accordingly design strings and array layout with optimum use of space, material and man power. In case of large variations in topography (3° to the horizontal) the study shall also include the effect of topographical variations on array layout and MMS structure design adequacy and stability. The contractor shall submit all the details/ design to the Engineer for review/ approval.

4.3 The contractor shall also identify potential quarry areas for coarse and fine aggregates to be used for concrete and shall carry out the concrete mix design for different grades of concrete to be used before start of work. The concrete mix shall be designed for each source of cement and aggregates as per provisions of relevant BIS Standard. The concrete mix design shall be carried out through NABL accredited Laboratory or any Govt. agency approved by the Engineer. In case the contractor proposes to use RMC, he shall submit the Concrete mix design report from the RMC supplier for review and approval by the Engineer. (In case of RMC, reports for periodic cube tests from the supply batch shall also be submitted for review and record).

5. Area Grading and Land Development

5.1 The Finished Grade Level (FGL) of the proposed plant shall be fixed with reference to the highest flood level (HFL) and surrounding ground profile at proposed site to avoid flooding of plant site. The data regarding HFL at proposed site shall be obtained from the metrological department by the contractor. In case of absence of this data, the contractor shall assess the required information through local site reconnaissance. The area at and around all buildings/ open installations (ICR, MCR etc.), transformer yard and switch-yard shall be uniformly levelled at suitable RL to be finalized considering topography and HFL at site. The minimum plinth level of all buildings/ open installations shall be 450mm above

FGL. Module mounting structure foundation/ Pile cap or any other pedestal shall be min. 200mm above FGL.

5.2 A detailed drawing for site levelling and grading (if necessary) shall be submitted by the contractor before commencement of grading and area development works. The estimated volume of cutting and filling shall also be marked on the Grading drawings for reference. The final grade levels to be adopted for different blocks shall be clearly marked on the Plant Layout/ Module Layout drawing.

5.3 The contractor is responsible for making the site ready and easily approachable by clearing bushes, felling of trees (mandatory permissions/ licenses/ statutory clearances from competent authorities if required for cutting of trees, blasting or mining operations, disposal of waste material etc. shall be obtained by the contractor), cutting, filling with selected excavated earth or borrowed earth including identifying borrow areas. Except in exceptional cases (with approval of the Engineer), filling shall be made up of cohesive non-swelling material. The filling for levelling/ reclaiming the ground/ area shall be done in layers not more than 150mm of compacted thickness in case of cohesive (clayey) soils and 250mm compacted thickness in case of granular (sandy) soils with compaction up to 95% (of modified proctor density) and 80% (of relative density) respectively. The slope at edge of graded areas shall not be steeper than 1:1.5 (1 Vertical: 1.5 Horizontal) in cutting and 1:2 (1 Vertical: 2 Horizontal) in filling. In case of filling with rock material, the edges shall be provided in line with provisions of relevant BIS standard.

5.4 It shall be ensured that the land is graded or levelled properly for free flow of surface run-off and the grade levels shall be fixed with respect to high flood level at site, drainage pattern and system requirements. It shall be ensured that the land is used optimally to have maximum solar power generation considering full utilization of the plot areas. It is advisable to follow the natural flow of water at the ground as far as possible for drainage design.

5.5 In case the filled up earth is brought from outside the plant or borrow areas (when the material inside plant area is not found suitable for grading work or if directed by the Engineer), the contractor shall carry out all required soil investigations to ascertain the suitability of the borrowed soil for land development and filling purposes. Contractor's scope shall also include arranging land lease, getting all necessary statutory approvals for mining, payment of necessary challan etc. Excess earth, if any, shall be disposed of properly at location as directed by the Engineer.

6 Roads

6.1 Suitable approach road (as applicable) from nearest public road up to plant Main gate, Access road from Main gate to Main control cum office room (MCR), Internal access roads connecting MCR and other facilities/ buildings/ open installations like Local control room(s) (LCR)/ Inverter control room(s) (ICR), Sub-station & Switch yard (as applicable) etc. and Internal peripheral road along the boundary fence/ wall shall be provided for safe and easy transportation of men, material and equipment during construction and maintenance.

6.2 The Approach road connecting nearest public road and the Main gate shall be of 5m wide carriage way with 0.5m wide shoulders on either side. The access road connecting Main gate and MCR and internal access road(s) connecting MCR to various facilities/ buildings shall be of 3.5m wide carriage way with 0.5m wide shoulders on either side while the peripheral road shall be of 2.5m wide carriage way with 0.5m shoulders on either side. The top of road (TOR) elevation shall be minimum 200 mm above FGL to avoid flooding of roads during rains. The roads shall be provided with alongside drains as per design requirements of drainage system to avoid flow of storm water over the road. The roads

shall be designed and constructed as per IRC SP-20 corresponding to design vehicular traffic (150 commercial vehicles per day for approach and internal access roads & 45 commercial vehicles per day for peripheral road) and critical field CBR value of the subgrade. Shoulder shall be of min. 150mm thickness.

6.3 However, following minimum road section details shall be followed: Approach road from nearest existing Public road to Main Gate, Access road from Main Gate to MCR building and Internal roads connecting MCR building with LCR building and other facilities:

(i) Topping: wearing course of 20 mm thick pre-mix carpet or surface dressing, compacted 75mm thick, with murrum blended with WBM Grade-III, as applicable.

(ii) WBM (CBR>100%): compacted 75mm thick, Grade III

(iii) WBM (CBR>100%): compacted 100 mm thick, Grade II
(iv) Granular sub-base (CBR>15%): compacted 200 mm thick in two layers of 100mm thickness each,

(v) Compacted subgrade: top 300mm thick, compacted up to 98% of standard proctor density
(vi) Shoulders: compacted 150mm thick, murrum blended with WBM Grade-III

Peripheral Road:
(i) Topping: surface dressing, compacted 75 mm thick, murrum blended with WBM Grade - III
(ii) WBM (CBR>100%): compacted 75 mm thick, Grade III
(iii) WBM (CBR>100%): compacted 75 mm thick, Grade II

(iv) Granular sub-base (CBR>15%): compacted 150 mm thick in two layers of 75mm thickness each,
(v) Compacted subgrade: top 300mm thick, compacted up to 98% of standard proctor density
(vi) Shoulders: compacted 150mm thick, murrum blended with WBM Grade-III

6.4 Soaked CBR value of sub-grade shall not be less than 2%. Where the CBR of the subgrade is less than 2 % a capping layer of 100 mm thickness of material with a minimum CBR of 10 % is to be provided in addition to the sub-base required for CBR of 2 %. When the subgrade is silty or clayey soil and the annual rainfall of the area is more than 1000 mm, a drainage layer of 100 mm over the entire formation width should be provided conforming to the gradation given in Chapter 6 of IRC SP-20. This layer will form a part of the designed thickness of sub-base.

6.5 In case of no-availability of murrum in the nearby areas of the project site, suitable other screening/ blending material for WBM construction may be used conforming to provisions of IRC SP 20.

6.6 The construction of road shall conform to relevant IRC/ MORTH standards.

6.7 Drain, cable or any other crossing shall be provided with RCC box or precast concrete pipe culvert. The culvert design shall conform to relevant IRC standard. Except for module cleaning system the pipes for road culverts shall be of minimum class NP3 conforming to IS 458 with min. soil cover of 750mm above the pipe. In case of soil cushion less than 750mm suitable concrete (M20) bedding/ encasement shall be provided. Water supply pipe

for module cleaning and service/ drinking water crossing the road shall be laid through Medium class GI steel pipe conforming to IS: 1161.

6.8 Minimum dia. of casing pipe to be used at road/ drain crossing for laying any facility like electric cable, water pipe line etc. shall be 150mm.

6.9 Maintenance pathways of min. 1.0m width shall be provided between SPV arrays for easy movement of maintenance staff, tools, equipment and machinery, washing of modules etc. The pathway area shall be generally levelled and well compacted manually/ mechanically. Areas of depression, valley zones or wherever there is noticeable change in topography, the same shall be levelled by laying & compacting murrum or any other suitable granular material so as to match the top finished surface with ground topography/ grade to avoid accumulation of water in the region and allowing its free flow to keep the area devoid of mud/ sludge.

6.10 The design and drawings for approach road, all internal roads and culverts shall be submitted to the Engineer for approval before execution.

7. Surface/ Area drainage

7.1 The contractor shall design and construct storm water drainage network for smooth disposal of storm water from the plant to the nearest available drainage outlet.

7.2 The storm water drainage system shall be designed and planned to ensure no water stagnation in the plant.

7.3 The design shall conform to the provisions of IRC SP 42 and best Industry practices. (The design rainfall shall be taken as max. hourly rainfall at 25 years return period at project site as provided in the Isopluvial map of the relevant subzone annexed with Flood Estimation Reports of Central Water Commission (CWC).

7.4 The coefficient of run-off for estimation of design discharge shall be considered as per catchment characteristics, however it shall not be less than 0.6.

7.5 The drainage scheme shall be designed considering the plant plot area and the surrounding catchment area contributing to the plant area drainage as per the topography.

7.6 The storm water drainage system shall be a network of open surface drains (with rectangular or trapezoidal cross section) and shall generally be designed to follow the natural flow of water and ground contours.

7.7 Suitable size plant peripheral drain as per design (min. bottom width x depth: 500mm x 500mm) along inside of plant boundary wall/ fence shall be provided for smooth channelization of outside storm water and to avoid flooding in the plant. The size of all internal and road side drains shall not be less than 450mm (bottom width) x 500mm (depth).

7.8 All trapezoidal drains shall be lined with either brick or RR masonry/ concrete or stone slabs as suitable to the site conditions. The min. Thickness of the lining shall be 115mm for brick masonry, 75mm for concrete slabs, 150mm for RR masonry and 100mm for stone slabs. The lining shall be in CM (1:4) and the joints shall be raked and pointed with CM (1:3), however, the joints in lining of plant peripheral drain may be left without pointing.

7.9 In case of rectangular drain, the thickness of the wall shall be checked against structural stability. Min. thickness shall be 230mm for brick wall, 300mm for RR masonry and 125mm for RCC work, except for garland drain around buildings where the min. wall thickness can be 115mm, 200mm and 100mm respectively for brick masonry, RR masonry and RCC work.

7.10 The structural design of drains shall be as per provisions of relevant BIS standards and good industry practice.

7.11 The drain outfall shall be connected to the nearest existing natural drain(s)/ water body outside plant premises and it shall be ensured that the drainage water shall not re-enter the plant nor encroach/ flood in the adjacent property/ plot.

7.12 The proposed drainage scheme along with design calculations and drawings shall be submitted to the Engineer for review/ approval before start of construction.

7.13 The contractor shall also explore the possibility of providing rain water harvesting system for water conservation by constructing suitable collection wells along the drains or through provision of detention ponds etc. The scheme for rain water harvesting along with design calculations shall be submitted for approval.

8. Peripheral boundary Wall/Fence

8.1 The plant peripheral boundary shall be provided with either Chain link or barbed wire fencing or masonry boundary wall as specified.

8.2 The boundary fence/ wall shall be provided along the Solar PV plant boundary to demarcate the plant boundary and to keep away the unauthorised access to the plant. The fence/ wall shall be provided with Main entry gate. The fencing/ wall shall be with 2.5m height above grade level including 400mm dia. GI concertina wire along with 3 no. of barbed wires on either arm to be fixed on Y shape angle brackets. The main gate shall be min. 5.5m wide (clear) (4 m carriage way + 1.5m wicket gate).

8.3 Chain link fencing

8.3.1 The fencing shall be of Chain link (GI or poly coat GI as applicable) mesh fabric with internal, corner and stay posts of RCC (min 200mm x 200mm size, M30 grade) or GI angle (min. ISA 75x75x6 mm), as applicable, along with 150mm height 230 thick brick/ 300 thick RR masonry toe wall, with 100mm thick PCC (1:3:6) foundation.

8.3.2 The brick masonry toe wall shall be plastered with 15thick CM (1:4) plaster on both faces and shall have min. 50 thick PCC (1:2:4) coping finished smooth and projecting 25mm on either side of the wall with top sloping inwards. The depth (below NGL) and width of toe wall foundation shall not be less than 450mm and 500mm respectively.

8.3.3 Spacing of intermediate posts shall not be more than 2.5m. Every 10th intermediate post shall be provided with a stay post while every corner post shall be provided with two stay posts on either side.

8.3.4 Joints in RR masonry shall be properly raked and pointed with CM (1:3).

8.3.5 At pond or drain area suitable grid of MS solid SQ bar of min. Size 25 mm x 25 mm (spacing of vertical bars not more than 125mm) shall be provided in place of toe wall for smooth flow of water.

8.3.6 The GI chain link mesh fabric (40x40 mm with min. wire gauge 3.15mm, both ends twisted) and fencing shall conform to IS: 2721. Poly coat GI chain link mesh (50x50mm) shall conform to ASTM 668 and fencing shall conform to ASTM 567.

8.3.7 Each fence panel, in lieu of tie wire, shall be provided with 35x35x3mm GI edge angle at top and bottom with mesh fabric firmly secured to them and to intermediate support angles.

8.3.8 All MS sections shall be painted with 2 coats of epoxy paint of approved make and shade over 2 coats of suitable primer.

8.4 Boundary wall

The boundary wall structure shall be a RCC beam-column structure with wall of either brick (min. 230mm thick), RR masonry (min. 300mm thick) concrete block (min. 200mm thick) or of Pre-cast RCC wall panels (min. 75mm thick). The top of the wall shall be provided with concrete coping (min. 50mm thick with 40mm projection on either side).

8.5 Barbed wire fencing
The details of barbed wire fencing shall be same as those for chain link fencing except providing barbed wires (4mm dia.) in place of chain-link mesh. The fence shall have 10 nos, of horizontal barbed wire lines and top 400mm height provided with 3 no. of barbed wire lines fixed to Y shaped angle supports welded to every angle post. Every 5th bay of the fence shall be provided with additional cross barbed diagonal wires.

8.6 Main Gate
8.6.1 The Main entry gate (2.5m height) shall of rugged design with solid MS steel sections (20x20mm). The spacing of vertical members shall not be more than 125 mm.

8.6.2 The gate shall be complete with MS flat guide track, castor wheel(s), GI fittings & fixtures like hinges, aldrop, locking arrangement, posts etc.

8.6.3 The main gate shall be of 2.5m height and shall have 4.5m wide Gate for vehicular movement and an adjacent 1.5m wide wicket gate for pedestrian movement.

8.6.4 The gate shall be provided with the Project name plate (2.5mx 1m, 3mm thick MS plate). The gate shall be painted with 2 coats of epoxy paint over 2 coats of suitable primer.

8.6.5 The gate shall be painted with 2 coats of epoxy paint of approved make and shade over 2 coats of suitable primer.

8.7 All design and drawings for peripheral boundary fence/ Wall and Main gate shall be submitted for Engineer's approval before execution.

9. Plant Layout

9.1 The contractor shall submit drawing showing proposed Project Plant and SPV module Layout.

9.2 The Plant and SPV module layout shall be a comprehensive drawing showing various requirements of the project like, Reference coordinate grid, Geographical and Plant North, Layout of boundary fence including coordinates of all corner points, Location of main entrance gate and any other access gates as per project needs, Block wise FGL, Layout of

main approach road to the plant, Internal and peripheral roads, Security Room/ cabin (s), all Buildings and Open installations with coordinates, Temporary Storage yard/ facility to be used by the contractor during construction, Contractor's & Engineer's site office, Proposed Array layout, Lightening arrester, UG/Over ground water Tank(s), Storm water drains, Corridor for buried cables etc.

9.3 The cable corridor shall be laid through clear gap between arrays and shall not be laid Below modules for easy maintenance.

9.4 All the facilities and buildings shall be presented with suitable Legend.

9.5 The drawing shall be in suitable scale to have proper representation of the information.

9.6 The Plant & SPV module layout drawing shall be submitted by the contractor for review/ approval by the Engineer.

10. Design Loads

10.1 Unless otherwise specified elsewhere, Dead load, Live load, Wind load and Seismic load for buildings and structures shall be considered as per provisions of relevant BIS standards.
10.2 The following minimum imposed load as indicated for some of the important areas shall, however be considered for the design. If actual expected load is more than the specified minimum load, then actual load is to be considered.

S. No.	Area	Imposed (Live) Load
1	Roof	1.50 kN/ Sqm
2	Building floors (GF) & Grade Slab	10.00 kN/ Sqm
3	RCC Floors (General)	5.00 kN/ Sqm
4	Outdoor platforms, Stairs, Landing and Balconies, Walkway, Chequred plate & Grating (except cable trench cover)	5.00 kN/Sqm
5	Road culverts & allied structures over drain & pipe crossings subjected to vehicular traffic Design for Class – 'A' loading (Wheeled & Tracked both)	as per IRC Standard
6	Underground structures such as Sump, Pit, Trench, Drain, UG tank etc. In addition to Earth pressure and Ground water table at FGL, a surcharge of	10kN /Sqm shall also be considered

The structure shall be designed for following criteria – (a) Inside empty with outside fill+ surcharge and water table at GL & (b) Inside water with no fill & water table outs side

7	Pre-cast and chequred plate cover over cable trench.	4.00 kN/ Sqm

8 a) Main access & Internal Roads

b) Peripheral Road
i. As per IRC SP 20 corresponding to vehicular traffic of 150 commercial vehicles per day and critical in-field CBR
ii. As per IRC SP 20 corresponding to vehicular traffic of 45 commercial vehicles per day and critical in-field CBR

10.3 Primary Loads

(i) Dead Load (DL)
(ii) Live Load (LL)
(iii) Snow Load (SnL)
(iv) Wind Load (WL) – Both along X & Z horizontal direction
(v) Seismic Load (EL) – Both along X & Z horizontal direction

10.4 Basic wind speed (V_b) at project site shall be taken as per IS 875 (part-3) unless otherwise specified elsewhere.

10.5 To calculate the design wind speed (V_z), the factors K_1 (probability factor or risk coefficient), K_2 (terrain roughness and height factor) and K3 (topography factor) shall be considered as per IS 875 (Part-3) (However, minimum values for K_1, K_2 and K_3 shall be 1.0, 1.05 and 1.0 respectively)

10.6 In case of plant site within 60 km of sea coast, the importance factor for cyclonic region, 'k_4' shall be taken as 1.15. Provisions of IS: 15498 shall also be followed to ensure general safety of the structure.
10.7 To calculate the design wind pressure 'p_d', factors 'k_a' (area averaging factor) and 'k_c' (combination factor) shall be taken as 1.0. (The factor 'k_d' shall be taken as 1.0 in case of plant site within 60km of sea coast).

10.8 The Seismic Load shall be considered corresponding to Earth quake zone at site as per IS: 1893 (Part- 4) with Importance factor 1.5.

10.9 The Snow Load shall be considered as per IS:875 (Part-4)
.
10.10 Notes for WL on MMS WL shall be considered as detailed below for estimation of WL (±X, ±Z direction) under primary loads. Load due to wind on side (exposed) face of respective MMS members (Drag force) for wind acting in (±) X & Z direction shall also be considered along with (i) & (ii) below.

(i) Load due to fair (positive pressure) wind direction on design tilt angles of MMS members for wind acting in (±) X, Z direction

(ii) Load due to adverse (negative pressure) wind direction on design tilt angles of MMS members for wind acting in (±) X, Z direction

10.11 Design Load combinations

10.11.1 Appropriate Load factors in LSM design for concrete structures and appropriate Factor of safety in WSM design (ASD) for all steel structures including MMS shall be

considered as per relevant BIS standard. No increase in permissible stress is permitted in design of MMS

10.11.2 Following load combinations shall be considered in design:

(i) DL+LL
(ii) DL+LL ± WLx
(iii) DL +LL± WLz
(iv) DL+LL ± ELx
(v) DL+LL ± ELz
(vi) DL+SnL ± WLx
(vii) DL +SnL± WLz
(viii) DL+SnL ± ELx
(ix) DL+SnL ± ELz

10.11.3 All buildings, structures and foundations shall be designed to withstand loads corresponding to worst design load combination.

11. Foundations (General)

11.1 Contractor shall design all foundations for buildings, equipment, HT line Towers, Switch yard structures, Transformer, MMS & other structures as per relevant BIS standards and recommendations of Geotechnical investigation report. The depth of foundation (below NGL) shall not be less than 1m except in case of chain link fencing post (for boundary & transformer yard fencing) where it shall not be less than 750mm (below NGL).

11.2 Min. thickness of PCC below brick wall shall be 150mm.

11.3 All foundations of one building shall be founded at same RL (Reduced level) with respect to foundation depth below lowest NGL (Natural ground level) in the building area. The Levels shall be obtained with reference to the already established TBM using digital survey instrument such as Total Station.

11.4 All design & drawings shall be submitted to the Engineer for approval before execution.

12. MMS Foundation

12.1 Module mounting structure (MMS) may be supported on isolated/ strip footing or pile foundation.

12.2 Bored cast-in situ, Driven precast or under reamed Concrete pile

12.2.1 In case the contractor proposes to provide concrete pile; the type, dia. and length of pile shall be as per recommendations of Geotechnical investigation report corresponding to prevalent soil characteristics at site. However, the min. dia. And depth of the pile shall be 300mm and 1800mm respectively except when very hard strata/ rock (N>100) is encountered at a higher level, the pile shall be extended in to the hard strata minimum 1.0 times the diameter of the pile with total depth of the pile not less than 1200mm below cut-off level.

12.2.2 As specified above, the MMS support shall project minimum 200mm above FGL (Finished grade level) to avoid any damage to the MMS column/sub support due to direct contact of rain water/ surface run-off. This shall be ensured through either single stage construction of entire pile length including portion above FGL or by providing a collar (to be

cast in second stage) which shall project min. 75mm in plan beyond the pile face and shall extend min. 250mm below GL.

12.2.3 For proper bonding, the surface of first stage concrete shall be made rough by trowelling and cleaning out laitance and cement slurry by using wire brush on the surface of joint immediately after initial setting of concrete. The prepared surface should be clean watered to get saturated dry condition when fresh concrete is placed against it. The prepared surface shall be applied with a suitable bonding agent before construction of pile cap/ collar as required.

12.2.4 In case the column post/stub is supported through base plate-anchor bolt assembly, the same shall only be provided through RCC pile cap to be designed as per provisions of relevant BIS standard with min. clear overhang of 75mm. The pile shall embedded min. 50mm in the pile cap and the pile reinforcement shall be extended in to the pile cap for proper anchorage.

12.2.5 In case of collapse of foundation strata during drilling of the pile bore, removable steel liner shall be used to maintain design depth and diameter of the pile for proper concreting.

12.2.6 The design & installation of piles shall conform to IS: 2911.

12.2.7 The bore shall be free from water before poring of pile concrete. For under water concreting tremie shall be used.

12.3 Helical/ Screw Pile

12.3.1 The design, manufacture, testing and installation of Helical/ Screw pile shall conform to ICB-2009 and Practice Note 28- “Screw Piles: Guidelines for Design, Construction & Installation, ISSN 1176-0907 October 2015 (IPENZ Engineers New Zealand)”

12.3.2 The design of pile shall be undertaken and verified by a suitably qualified geotechnical or structural Chartered Engineer with experience in the design of helical/screw piles.

12.3.3 The pile shall be designed and manufactured in accordance with accepted engineering practice to resist all stresses induced by installation into the ground and service loads.

12.3.4 The steel grade for pile shaft, helix plates and other accessories shall be with min. Fy 350 MPa. Min. thickness (BMT) of shaft and helix plate shall be 6 and 8mm respectively in case of coastal installations and soils containing aggressive chemicals and at other project sites it shall be respectively 5 and 6mm. Cap plate and col base plate shall be min. 12mm thick and of min. grade E-250 conforming to IS:2062.

12.3.5 All materials shall be hot dip galvanized conforming to relevant BIS standard with min. thickness of galvanization 80 microns.

12.3.6 Wherever the pile shaft is required to be infilled with concrete grout, the same shall be of min. grade M30 (anti shrink)

12.3.7 The allowable axial design load (Direct compression & Pull out), Pa, of helical piles shall be the least of the following values:

(i) Sum of the areas of the helical bearing plates times the bearing capacity of the soil or rock comprising the bearing stratum.

(ii) Capacity determined from well-documented correlations with installation torque.

(iii) Load capacity determined from initial load tests.

(iv) Axial capacity of pile shaft.

(v) Axial capacity of pile shaft couplings.

(vi) Sum of the axial capacity of helical bearing plates affixed to pile.

12.3.8 The lateral allowable load capacity of the pile shall be calculated using P-Y analysis and shall be verified with field trials. The allowable design lateral load shall be equal to the min. of (i) the total lateral load producing max. lateral deflection of 5mm and (ii) 50% of the total lateral load at which the lateral displacement increases to 12mm.

12.3.9 Dimensions of the central shaft and the number, size and thickness of helical bearing plates shall be sufficient to support the design loads.

12.3.10 The Design Report shall include following details.
(i) Design loads
(ii) Geotechnical Strength Reduction Factors and supporting methodology
(iii) List of design standards
(iv) Design methodology and how specific loads such as seismic, lateral and settlement are addressed
(v) Founding stratum
(vi) Estimated length
(vii) Connection design and details between pile shaft & pile cap plate and Col base plate
(viii) Pre-production and production load testing to support design including acceptance criteria.
12.3.11 Helical piles shall be installed to specified embedment depth and torsional resistance criteria as per design. The torque applied during installation shall not exceed the maximum allowable installation torque of the helical pile

12.3.12 Special inspections shall be performed continuously during installation of helical pile foundations. The information recorded shall include installation equipment used, pile dimensions, tip elevations, final depth, final installation torque and other pertinent installation data as required.

12.3.13 The installation of piles shall be done by an agency having adequate experience in helical pile construction
.
12.3.14 The method statement for pre-production load testing (initial test) and construction of Helical Pile shall be submitted for review and approval. The method statement shall comply following requirements:
12.3.14.1 Helical pile pre-production load testing The Piling Contractor shall provide a method statement for the pre-production load testing. The method statement shall be submitted 2 weeks prior to pile installation for testing and shall contain the following information (as a minimum):
• Programme of the testing, detailing the timing and sequence of each load test including any additional investigations proposed

• The general arrangement of the equipment
• A method for measuring the displacement at the head and toe of each test pile
• Template for the Pile load test report
• Confirming the criteria for determining the acceptability of the compression, tension and lateral load tests
• A contingency plan in the event that a load test is deemed not acceptable
• A procedure for verifying the capacity for each individual pile, this may include correlating the installation torque for each pre-production pile with the load test results
• All pile load tests shall be supervised by suitably experienced personnel, who are competent to operate, monitor and record each test throughout its duration. Each pile load test shall be continuously monitored throughout its duration.

12.3.14.2 Helical Pile Construction

The contractor shall provide a method statement for each piling operation to be undertaken in executing the Works. The method statement shall describe all proposed equipment and detail the construction sequence. The method statement shall be submitted with the tender and shall contain the following information (as a minimum):
• Programme of the works, detailing the timing and sequence of individual portions of the works
• Full details of the installation plant to be used, including manufacturer's information and proof of servicing/recent upkeep and calibration
• Proposed phasing of excavation/filling operations such that the design stresses in the piles (and any supporting frames) are not exceeded
• The contingency plan to be adopted, to minimize disruption and delay, in the event of encountering obstructions
• Anticipated noise levels (measured in dB) and vibration levels (measured in mm/sec) arising from piling operations (if applicable)

12.3.15 The Piling Contractor shall nominate a suitably experienced, professionally qualified engineer, as the "Piling Supervisor".

12.3.16 Unless specified else were, the field trials for initial load tests on concrete and helical/ screw pile shall conform to IS: 2911 (Part 4) & Practice Note-28 (IPENZ Engineers New Zealand) as applicable. The no. and location of such tests shall be as per the provisions stipulated under Cl. No. 26.8.

12.3.17 35.4 Contractor shall also carry out routine tests on 0.5 % of the total no. of working/ job piles as per provisions of IS: 2911 (Part 4). In case of unsatisfactory results, min. no. of routine tests may be increased up to 2% of the total no. of working/ job piles as per the directions of the Engineer

13 Module Mounting Structure (MMS)

13.1 The module mounting structure design shall generally follow the existing land profile. The top of the table shall be in one plane.

13.2 In MMS analysis the column support shall be assumed at EGL/NGL.

13.3 In case of topographical variations more than 3_o, the contractor shall carry out detailed study of its effect on array layout, shadow analysis and structural stability of MMS.

13.4 The structure shall be designed to allow easy replacement of any module and shall be

in line with site requirements.

13.5 The MMS stub/ column, rafter, purlin, ties and bracing members shall conform to following Indian standards.

• IS: 2062 – Hot rolled Medium and High tensile structural steel

• IS: 811 – Cold formed light gauge structural steel sections

• IS: 1161 – Steel tubes for structural purposes

• IS: 4923 – Hollow steel sections for structural use

• Minimum grade of steel for sections conforming to IS: 811 & IS: 4923 shall be E350 conforming to IS: 2062 and Y_{St} 310 conforming to IS: 1608 respectively.

13.6 The contractor can also propose new light gauge structural steel or structural aluminium sections other than specified in IS: 811 subject to approval of the Engineer. In this case the contractor shall submit his proposal stating the technical advantages of the proposed sections for Engineer's review along with supporting literature and sample design calculations conforming to present specifications at the time of bidding.

13.7 The minimum thickness excluding anti corrosive treatment (BMT) of various elements of MMS structure shall be as following: • Stub/ column – 3.15mm,

• Rafter – 2.5mm &

• Purlin & other members – 2.0mm

13.8 The primary loads and load combinations for design of MMS structure shall be as specified under Clause No. 35. The design shall be done by Working stress method and no increase in allowable stress shall be permitted.

13.9 The maximum permissible deflection/ side sway limits for various elements of MMS under serviceability conditions shall be as following:

• Lateral deflection/ side sway for Column – Span/ 240

• Vertical deflection for Rafter and Purlin – Span/ 180

• Lateral deflection for Purlin – Span/240

13.10 In case of natural frequency in first mode less than 1 Hz, the design of the MMS structure shall also be checked against dynamic effects of wind as per provisions of IS – 875 (Part-3) using gust factor method.

13.11 The purlins shall be provided with following min. 10mm dia. GI sag/ tie rods or 30x30x2 GI tie angles:

• 1 no. tie rod in middle of each span
• 1 no. diagonal tie rod at each corner in end spans

13.12 Lateral restraint to compression flange if any due to PV panels is not permitted in purlin design.

13.13 The vertical diagonal bracing shall be provided in alternate spans of each unit (table) of MMS.

13.14 MMS shall support SPV modules at a given orientation & tilt and shall absorb and transfer the mechanical loads to the ground properly.

13.15 Welding of structure at site shall not be allowed and only bolted connections shall be used.

13.16 The MMS structure shall be hot dip galvanized with minimum GSM 610 kg/ sqm and/or minimum coating thickness of 80 microns for protection against corrosion. Galvanization shall conform to IS-2629, 4759 & 4736 as applicable.

13.17 It is to ensure that before application of this coating, the steel surface shall be thoroughly cleaned of any paint, grease, rust, scale, acid or alkali or any foreign material likely to interfer with the coating process.

13.18 The bidder shall ensure that inner side is also provided with galvanization coating.

13.19 The galvanization shall be done after fabrication of members and cutting of holes to ensure galvanization of all cut/ exposed edges.

13.20 In case the proposed section is made up of Aluminum, anodized coating shall be Gr. AC25 and shall conform to IS: 1868.

13.21 The array structure shall be so designed that it will occupy minimum space without sacrificing the output from SPV panels at the same time.

13.22 All fasteners and washers (2 round + 1 spring) both for MMS connections and fixing of PV Module shall be adequately protected from atmosphere and weather prevailing in the area.

13.23 Fasteners and washers to be used for erection of mounting structures and those for fixing Module over MMS shall be of stainless steel grade SS 304 & SS 316 with property class A-70 conforming to relevant ISO standard and must sustain the adverse climatic conditions to ensure the life of the structure for 25 years.

13.24 Min. diameter of bolt for MMS connections shall be 10mm except for column-rafter connection where it shall not be less than 12mm (not less than 16mm with bushing in case of single bolt connection for seasonal tilt)

13.25 Modules shall be clamped & bolted with the structure properly. The material of clamps shall be Al / SS – 316 having weather resistant properties. Clamp/bolt shall use EPDM rubber and shall be designed in such a way so as not to cast any shadow on the active part of a module.

13.26 MMS column post supported with base plate secured to foundation shall be fixed with galvanized high strength “J” bolts conforming to specifications of IS: 4000/ IS: 1367 and relevant IS code Installation of foundation bolts and embedment of column leg in foundation concrete shall be done by using template to ensure proper alignment. The underside of base plate shall be provided with anti- shrink grout.

13.27 In case the contractor proposes to extend the column leg to embed it in the pile as an alternate fixing arrangement, the column member shall be extended for full depth of the

pile (100mm cover at tip of the pile) with an end plate of min. 4mm thickness to be fixed at the bottom of column leg. (However, for plants in coastal area or in case of marshy soil the column post shall be supported only with base secured to foundation through base plate and anchor bolt assembly and no embedment of column leg in foundation is permitted)

13.28 The area of c/s of embedded leg shall not be less than 0.8% of pile cross sectional area.

13.29 The array structure shall be grounded properly using maintenance free earthing kit.

13.30 The bidder/manufacturer shall specify installation details of the PV modules and the support structures with appropriate diagram and drawings.

13.31 The Bidder should design the structure height considering highest flood level at the site and the finished grade level. The minimum clearance between the lower edge of the module and the finished grade shall be the higher of (i) Highest flood level + 100mm and (ii) 500 mm, as applicable

13.32 The length of one unit (Table) of MMS shall not generally be more than 20m.

13.33 The contractor shall submit the detailed design calculations and drawings for MMS structure, bill of materials and their specifications/ standards to the Engineer for approval before start of fabrication work.

14 Concrete Works

14.1 Construction of all RCC works shall be done with approved design mix as per IS 456 and the materials used viz. Cement, coarse & fine aggregate, Reinforcement steel etc. shall conform to relevant BIS standards.

14.2 Unless otherwise specified elsewhere, PCC shall be of min. grade M10 (nominal mix 1:3:6) except for mud mat, back filling of ground pockets or leveling course which shall be of grade M7.5 (nominal mix 1:4:8).

14.3 Reinforcement steel shall be of high strength TMT bars of grade Fe500 D conforming to IS: 1786. Ductile detailing in accordance with IS: 11420 shall be adopted for superstructure and sub-structure of all RCC buildings and structures.

14.4 Unless specified otherwise for grouting works anti shrink ready mix grout of approved make or cement mortar (CM) grout with non-shrink compound shall be used. The grout shall be high strength grout having min. characteristic strength of 35 N/mm^2 at 28 days.

15. Miscellaneous Steel Works

15.1 Unless otherwise specified elsewhere, all structural steel work shall be designed as per provisions of IS: 800 with working stress method of design (WSD).

15.2 Structural steel hot rolled sections, flats and plates shall conform IS: 2062, structural Pipes shall be medium (M)/ high (H) grade conforming to IS: 1161, chequered plate shall conform to IS: 3502 and Hollow steel sections for structural purposes shall conform to IS: 4923.

16. Buildings

16.1 General Requirement

16.1.1 Plant buildings/ open installations are required to be constructed for housing the electrical equipment/ panel (Local Control Room Building - LCR) and Control room cum office cum store (Main Control Room Building - MCR) for operation and maintenance of Photovoltaic Solar Power Plant. Security room at main gate & Security cabin(s) (at strategic locations) shall also be provided to secure the plant from any theft/ burglary/unauthorized entry.

16.1.2 Unless otherwise specified elsewhere, all buildings except Security room/ cabin shall have RCC framed structure. Brick partition walls shall be provided for Kitchen, Pantry, Battery room and Toilet units. For other rooms AL Glass partitions shall be provided. The equipment area shall be designed with OEM requirements to ensure all satisfactory operations. The security room/ cabin(s) shall be of prefabricated structure.

16.1.3 All buildings shall have provision of adequate windows for natural light & ventilation, fire safety provisions and shall be designed as per provisions of National building code (NBC).

16.1.4 The contractor shall submit the proposed equipment layout drawings to the Engineer for approval before development of Architectural drawings. The building layout, exterior elevations shall be aesthetically designed following good architectural practices to get a pleasant look. Horizontal/ vertical bands through projections/ groves in external plaster may be provided to break the monotony. Roof slab shall have projection of 450mm beyond external walls with RCC parapet wall of 450 mm clear height all-around which shall form a projected band at roof level. For weather protection all doors and windows shall be provided with 450mm wide RCC chajja. However, chajja for rolling shutter shall be 750mm wide.

16.2 Functional requirements

16.2.1 MCR Building

For operation & maintenance of SPV Plant, unless otherwise specified elsewhere, Control room cum office area of MCR building shall provide following facilities.

• Air-conditioned area (with provision of split A/C unit of adequate capacity) for SCADA room (min. carpet area 12m^2) & Conference room (min. carpet area 20 m^2)
• Inverter/ Switchgear, equipment room(s) as per OEM requirements
• Supervisor cabin and office area (min. carpet area 20 m^2)
• Store cum record room (min. carpet area 15 m^2)
• Battery room as per requirement
• Toilet block with separate gents and ladies wash room facilities (min. total carpet area 12 m^2)
• Pantry with service platform and utensil washing facilities (min. carpet area 5 m^2)
• Suitable provision for passage (for smooth movement of O & M personnel), cable trenches, operating area etc. (min. clear width 1500mm)

16.2.2 LCR/ Inverter Building

• Unless otherwise specified elsewhere, Inverter room/ LCR consists of data loggers, battery, Inverter, Electrical panels etc. as per requirement. There shall be suitable provision for easy/ smooth passage for O & M personnel, cable trench, operating area etc.

• The size of LCR/ Inverter room shall be provided as per OEM requirements. However, minimum clear height up to soffit of beam shall be 4m.

• In case ICR and MCR building facilities are clubbed in one single building, the Equipment area and Office cum Control room area shall be separated by a brick wall with provision of internal entry door.

• MCR building shall have separate main entry to office area plus a provision of fire exit door.

16.2.3 Security Room/ Cabin

16.2.3.1 Contractor shall provide required number of security cabins at strategic locations & at corners of the plot and 1 nos. security room at Main entry gate.

16.2.3.2 The Security room shall be of min. size 4m x 4m x 2.75m height The Security cabin shall be of min. size 1.2 x 1.8m x 2.5m height.

16.2.3.3 Security room/ cabin shall be a pre-engineered & pre-fabricated structure. The walls and roof of the building shall be fabricated with double skin insulated sandwiched Al-Zn alloy coated high tensile steel metal panels (BMT- 0.5mm, Al-Zn alloy coating -150 GSM total on both sides). The insulation shall be of PUF with min. density 40 kg/ cum and adequate thickness. Roof shall be provided with suitable slope, not less than 100 to the horizontal (approx. 1V:6H) for proper drainage of rain water and shall project 300mm beyond the walls. The make and (color) shade of precoated metal panels shall be subject to approval by the Engineer. Min. thickness of color coating shall be 20 micron (DFT) excluding prime coat 5 micron (DFT). The coating system shall confirm to IS; 15965.

16.2.3.4 The Main security room shall be provided with one Aluminum (AL) glazed door (0.75m wide x 2.1m height) on one face and AL glazed sliding windows (1.2m width x 1.0 m height) with AL grill on remaining three sides. Security cabin shall have one AL glazed door (0.75m widex2.1m height) and 1 no. AL sliding window (0.8m width x 1.0 m height) with AL (anodized) grill on one side. All glazing shall be of clear float glass with thickness of 4mm for window and 6 mm for door panel.

16.2.3.5 The door and windows shall be provided with all necessary fitting and fixtures like handles, tower bolts, mortise lock for door, stays, door stopper etc. All AL sections for doors and windows shall be anodized (min. average thickness 25 microns) or polyester powder coated (min. DFT 50 microns) with approved color shade for protection against weather.

16.2.3.6 Specially coated/ SS self-drilling screws/ fasteners conforming to class 3 as per ASTM: 3566.1 and 3566.2 shall only be used for all connections.

16.2.3.7 Anchor/ foundation bolts shall conform to IS: 5624 and IS 800.

16.2.3.8 The Security Cabin may be installed on concrete M15 skid platform (min. 350 thick) with skin reinforcement shrinkage or shall be supported on RCC pedestal & foundations. The concrete platform shall project 200mm beyond the walls.

16.2.3.9 The Security Room shall be supported on RCC pedestal & foundations.

16.3 The Design and drawings shall be submitted for approval prior to fabrication and installation.

17 Flooring, Skirting and Dado

17.1 Store area, Equipment Room

40 mm thick Cement concrete (IPS) flooring (1:2:4), aggregate size 10 mm down, conforming to IS 2571 with 2mm thick Heavy-duty epoxy coating (Industrial grade) of approved make on top as per manufacturer specifications and 10mm thick matching skirting of 100mm height.

17.2 SCADA Room, Control cum Office Room, Supervisor Room and Lobby 40 mm thick Heavy duty vitrified tile (8mm thick) flooring with matching skirting of 100mm height.

17.3 Battery Room

Acid/ Alkali resistant tile flooring and 2100 height dado, Floor and dado tiles - 20mm and 12 mm thick respectively. However, in case of maintenance free batteries, vitrified tile (8mm thk) flooring and dado shall be provided.

17.4 Toilet

• 40 mm thick Ceramic tile (8mm thick) flooring and glazed tile (6mm thick) 2100 height dado.
• 20mm thick Granite stone finish over platform for wash basin.

17.5 Pantry

40 mm thick heavy duty vitrified tile (8 mm thick) flooring and glazed tile (6mm thick) 2100 mm height dado, 20mm thick Granite stone finish over service platform.

17.6 Passage/ Corridor

40 mm thick Heavy duty vitrified tile (8mm thick) flooring with matching skirting of 100mm height.

17.7 Steps

Kota stone (20 thick) or 50 thick cement concrete (IPS) flooring conforming to IS 2571.

17.8 All items shall be of reputed make. Only Items with approved samples by the Engineer shall be used
.

18 Doors and Windows

18.1 Doors, windows, louvers and ventilators shall be made of AL sections (minimum average thickness 2.5mm), industrial grade, anodized (grade AC25, min. thickness 25 micron conforming to IS: 1868) or with polyester powder coating (Total DFT 50 microns conforming to IS: 13871) and shall be of approved make & colour shade. All sections, fittings and fixtures shall be anodized (min. thickness of coating 20 micron). The window and door shutters shall be of clear float/ wired/ ground glass as per design/ functional requirements. The doors in toile area shall be of steel frame with solid core (MDF) flush shutter, 35mm thick, with laminated finish on both sides conforming to IS: 2202.

18.2 AL Louvers, duct/ ventilation openings shall be provided as per functional requirement.

18.3 All doors, windows and ventilators shall be provided with all necessary fittings and fixtures like handles, tower bolts, wind stays, hinges etc. of heavy duty anodized AL. All doors shall be provided with hydraulic door closure of required capacity.

18.4 All windows shall be provided with suitable AL grill of anodized sections with adequate thickness for security purposes.

18.5 Clear float glass for window and door shutter shall be of min 4mm and 6mm thickness respectively. Wired/ ground glass where provided shall be of min thickness 6mm.

18.6 Entrance door and door in passage shall be min. 1.5m wide (double leaf) x 2.1 m height while door for Conference room and Store room shall be min. 1.2m wide x 2.1m height. All other doors shall be min. 1.0m widex2.1m height except for WC which may be of 0.8m width.

18.7 Rolling shutters shall be of required size and shall be made of cold rolled steel strips with adequate gauge thickness (min. 18 gauge) and shall conform to IS 6248. Rolling shutter shall be provided with all fixture, accessories, paintings etc. all complete and shall be mechanically operated type.

19 Roofing

19.1 The roof of all RCC buildings shall be provided with min. slope of 1:100 for effective drainage of rain water. The slope shall be achieved either by application of screed concrete of grade 1:2:4 (with 12.5mm down coarse aggregate) with min. 25mm thick CM 1:4 layer on top to achieve smooth surface to facilitate application of water proofing treatment.

19.2 The water proofing treatment shall be in situ five course water proofing treatment with APP (Atactic Polypropylene) modified Polymeric membrane over roof consisting of first coat of bitumen primer @ 0.40Kg per sqm, 2nd & 4th courses of bonding material @ 1.20 kg/sqm, which shall consist of blown type bitumen of grade 85/25 conforming to IS : 702, 3rd layer of roofing membrane APP modified Polymeric membrane 2.0 mm thick of 3.00 Kg/sqm weight consisting of five layers prefabricated with centre core as 100 micron HMHDPE film sandwiched on both sides with polymeric mix and the polymeric mix is protected on both sides with 20 micron HMHDPE film. The top most layer (5th layer) shall be finished with brick tiles of class designation 10 grouted with cement mortar 1:3 (1 cement: 3 fine sand) mixed with 2% integral water proofing compound by weight of cement over a 12 mm layer of cement mortar 1:3 (1 cement: 3 fine sand) and finished neat. The water proofing treatment shall be extended over golla/ fillet and inner face of the parapet up to 450mm height.

19.3 The corners at parapet wall and slab shall be provided with 50 thick fillet/ golla in CM 1:3 with neat finish.

19.4 Required no. of rain water down take pipes min. 100mm dia. PVC pipes (UV resistant), with 450x450mmx15mm deep khurra and MS grill at inlet shall be provided for rain water disposal.

20 Plinth protection and drain

20.1 750mm wide plinth protection with min. 75mm thickness of PCC (1:3:6) over 75 mm thick bed of dry brick ballast, 40mm nominal size well rammed and consolidated and grouted with fine sand, shall be provided around all the buildings.

20.2 A peripheral drain (except for Security room/ cabin) of min. internal size 250mm x 250mm with brick walls in CM 1:6 over 75mm thick PCC (1:3:6) bedding with 12mm thick plaster in CM 1:5 and 25thk PCC (1:3:6) coping at top shall be provided along the periphery of the plinth protection for collection and disposal of rain water from building roof.

21 Plinth filling for buildings

Plinth beam, when provided, shall be taken minimum 200mm below FGL. The plinth filling below Ground floor (GF) for all buildings shall be provided with following specifications.
(i) Well compacted sub-grade
(ii) Well compacted bounder soling with interstices filled with sand over compacted subgrade.
(iii) 75mm thick PCC 1:3:6 over (ii)
(iv) 100mm thick PCC 1:2:4 over (iii)
(v) 40mm thick floor finish over (iv)

22 Anti- termite Treatment

In case of presence of termites at the project site, an anti-termite treatment shall be provided for all foundation pits and building plinth in MCR building conforming to IS: 6313 to control entry of termites

23 Plumbing & Sanitary Works

23.1 Toilet block shall have following min. fittings:

• Wall mounted WC (Western type) 390 mm high with toilet paper roll holder, low height flushing tank and all fittings
• A set of 2 wall mounted Urinals (430 x 260 x 350 mm size) with flushing tank and all fittings (Gent's wash room only)
• Wash basin (550 x 400 mm) over concrete platform with all fittings including 2-pillar cocks
• Wall mirror (600 x 450 x 6 mm thick clear float glass) with hard board backing
• CP brass towel rail (600 x 20 mm) with C.P. brass brackets – one each in common area and bathroom (bathroom if applicable)
• Soap holder and liquid soap dispenser one each in common area and bathroom (bathroom if applicable)
• Shower and mixer for hot and cold water in bathroom (if applicable)
• Ventilators – Mechanical exhaust facility of adequate capacity
• Overhead PVC water storage tank – Capacity 1000 litres (common for both wash rooms) (2000 litres in case bathroom is to be provided)

23.2 Pantry room shall be provided with kitchen sink cum drain board and provision for installation of Water Cooler.
23.3 One toilet room with provision of WC and Wash basin shall be provided at Security Room near main gate.
23.4 Necessary plumbing lines for MCR building and Security Room near main gate.
23.5 All sanitary ware, fittings and fixtures shall be of reputed Make and Type and approved by the Engineer. All fittings, fastener, grating shall be of CP brass conforming to relevant BIS standards.

24 Painting & Other Finishes

Painting and white wash/ colour wash for the buildings shall conform to relevant BIS standards. The make and colour shade of the finish shall be as advised and approved by the Engineer.

Internal Walls except toilets & battery room Acrylic emulsion (for MCR) & Oil bound distemper (for LCR/ Security Room)

Battery room - Acid/ Alkali resistant tiled dado of 2100 mm height & Acid resistant resin-based epoxy paint above dado (Vitrified tile flooring and dado with oil bound distemper in case of maintenance free batteries)

Toilet - Oil bound distemper

External Walls - All weather proof cement based acrylic emulsion paint, exterior grade

MMS foundations/ Earth pit Enclosure - Cement paint

Underside of roof slab - White wash

Air-conditioned areas - Underside of roof slab- Under deck insulation with 50mm thick mineral wool, min. density 45 kg/ m3 and Gypsum board false ceiling with GI grid/ Gypsum tile (600x600 mm x 12 thick) false ceiling with AL grid as per manufacturer's details

Structural steel work - 2 coats of synthetic enamel paint over 2 coats of suitable primer

25 Air conditioning & Ventilation for MCR and Other Buildings

25.1 All buildings shall be equipped with appropriate numbers of fans for effective heat dissipation.

25.2 In MCR building, the supervisor room, Conference room and SCADA room shall have split type air conditioning units.

26 Fire Extinguishers

26.1 All buildings shall be installed with required no. of fire extinguishers as per relevant IS Standard and NBC. LiquefiedCO_2/ foam/ ABC type fire extinguisher shall be upright type of capacity 10kg conforming to IS: 2171, IS: 10658.

26.2 The fire extinguisher shall be suitable for fighting fire of Oils, Solvents, Gases, Paints, Varnishes, Electrical Wiring, Live Machinery Fires, and all Flammable Liquid &Gas.

27 Sand buckets

27.1 Sand buckets shall be wall mounted made from at least 24SWG sheet with bracket fixing on wall conforming to IS: 2546.

27.2 All buildings shall be provided with required no. of sand buckets as per relevant BIS standard and NBC. 4 No. of Bucket stands with four buckets on each stand shall be provided in the Transformer Yard.

28 Sign Boards and Danger Boards

28.1 The sign board containing brief description of major components of the power plant as well as the complete power plant in general shall be installed at appropriate locations of the power plant as approved by Engineer

28.2 The Signboard shall be made of steel plate of not less than 3 mm. Letters on the board shall be with appropriate illumination arrangements.

28.3 Safety signs, building evacuation plan and direction signs, assembly points shall also be placed at strategic locations.

28.4 The Contractor shall provide to the Engineer, detailed specifications of the sign boards.

29 Masonry Work

29.1 The masonry work shall be of bricks, laterite blocks (as per site conditions) or concrete blocks.

29.2 All external walls of buildings shall be 230mm and internal walls shall be 230mm or 115mm as per requirements.

29.3 All concrete block masonry walls shall be min. 200mm thick.

29.4 Brick work shall be in cement mortar (CM) 1:6 & 1:4 for 230 mm and 115 mm thick brick wall respectively unless specified.

29.5 Unless otherwise specified elsewhere, Bricks shall be of class designation 7.5 conforming to IS: 1077, IS: 2212 & IS: 3495.

29.6 All concrete blocks shall be of min. compressive strength of 7.5 N/mm2 and shall be of Grade-A conforming to IS: 2185.

29.7 The laterite blocks shall conform to IS: 3620.

29.8 All buildings shall be provided with suitable damp-proof course (DPC). The DPC shall be with PCC (1:2:4) using 6 down coarse aggregate and water proofing admixture. The min. thickness of DPC shall be 40mm.

29.9 The construction of brick masonry shall conform to IS: 2212. Construction of Concrete block masonry shall conform to IS: 2572.

30 Plastering, Pointing & Coping Works

30.1 All brick masonry work shall be provided with plaster.

30.2 Wall and ceiling plaster shall be in cement mortar (CM) 1:6 and 1:3 respectively.

30.3 Thickness of plaster shall be 18mm and 12mm respectively for rough and smooth surface of the masonry wall. The ceiling plaster shall be 6mm thick.

30.4 All joints in stone masonry shall be raked and pointed in cement mortar (CM) 1:3 except specified otherwise.

30.5 Exposed top surface of brick or stone masonry shall be provided with 25 mm thick plain cement concrete (PCC) coping (1:2:4) with trawl finish. All exposed coping shall be provided with suitable slope and projection for easy drainage of water.

30.6 All door and window chajja shall be provided with 10mm wide drip course.

31 Building Water Supply & Plumbing Works

31.1 C-PVC pipes shall be used for all internal building water supply works while all external water supply pipes shall be uPVC conforming to relevant BIS standard.

31.2 Rain water pipe shall be of PVC conforming to relevant BIS standard.

31.3 All sewerage, waste water and ventilation pipes shall be of HDPE conforming to relevant BIS standard.

31.4 MCR building and Security room shall be connected to Sewage treatment facility including all associated works like Manholes etc.

31.5 Sewage Treatment facility

31.6 The Contractor shall design & provide soak pit and RCC Septic tank for treatment of sewage and waste water from MCR building and Security room. The septic shall be designed as liquid retaining structure conforming to IS: 3370 for design loads as specified under Cl. No.55. However, in case of ground water within 1.5m of finished grade level or the soil strata being of low permeability (permeability ≤ 10^{-6} m/s) where septic tank and soak pit arrangement is not effective, suitable packaged sewage treatment plant of reputed make/manufacture shall be provided. The sewage treatment facility shall be of required capacity and of proven design suitable for total of 15 people.

31.7 The design and drawings shall be submitted for approval prior to execution.

32 Pipe & Cable Trenches

32.1 All trenches inside the building and transformer area shall be of RCC. The min. wall and base slab thickness shall be 100mm for depth ≤ 850mm and 150mm for depths > 850mm.

32.2 The trench shall be designed for lateral load due to external soil fill, ground water table at FGL and 5.0 KN/ Sqm surcharge. External trenches shall be kept min. 100mm above FGL to avoid entry of rain water. In case of straight length of the trench being more than 40m, suitable expansion joints with PVC water stop shall be provided.

32.3 Internal trenches (inside buildings) shall be provided with chequered plate (min. 8mm thick with angle stiffeners as required) covers while external trench shall have precast concrete covers.

32.4 Min. thickness of precast cover shall be 50mm. Both bearing edges of the cable trench and all edges of pre-cast concrete covers shall be provided with min. 50x50x6 mm edge protection angle with lugs.

32.5 The trench cover (chequered or pre – cast both) shall be provided with suitable lifting hooks.

32.6 As required suitable MS insert plates shall be provided on trench wall to support the cable rack/ pipe.

32.7 The trench bed shall have a slope of approx. 1(V):250(H) along and 1(V):50(H) across the length of the trench. The cable trench shall have a dewatering sump (s) of size 450x450x450 mm depth at suitable location to facilitate collection & pumping out of rain water from the trench.

32.8 The external buried cables shall be laid in excavated trench as specified under specifications for Electrical works. The sand for filling shall be of Grade – IV conforming to IS: 383.

33 Transformer Yard Civil Works

33.1 Transformer and equipment foundations shall be founded on piles/isolated spread footings or block foundation depending on the final geotechnical investigation report and functional requirements.

33.2 In case of transformer oil tank capacity ≥ 2000 litres, the transformer foundation shall have its own soak pit which would cover the area of the transformer and cooler banks, so as to collect any spillage of oil in case of emergency. The retention capacity of the soak pit shall be min. 1/3 volume of the transformer oil (excluding free space above gravel) and it shall be filled with granite stone gravel of size 40mm, uniformly graded, with 250 mm free space above gravel fill. The bottom floor of the soak shall have steep slope with a sump pit {not less than 1(v): 5 (h)} for quick drainage of and removal of oil in case of spillage.

33.3 In case of transformer oil tank capacity more ≥ 25000 litres, the soak pit shall be connected to a separate burnt oil pit through discharge pipe and shall be suitably sized to accommodate full oil volume (excluding free board above inlet pipe) of the transformer connected to it, without backflow. In this case the capacity of the soak pit may be reduced to min. 1/3rd of the total transformer oil volume. The burnt oil pit shall be further connected to oily water drainage system. The water shall be discharged into the nearest drain by gravity flow or pumping after suitable treatment as per statutory and code provisions.

33.4 Both, the transformer soak including side walls and the burnt oil pit shall be of RCC. The oil collection pit shall be provided with 20mm dia. MS rung ladder with 2 coats of epoxy paint over 2 coats of primer, a manhole & removable RCC cover. The inside of oil collection pit shall be plastered with 6 mm thick CM 1:6 and painted with 2 coats of epoxy paint over 2 coats of primer.

33.5 The area around the transformer and equipment shall be covered with uniformly graded granite stone gravel of size 40mm.

33.6 The area shall be provided with galvanized chain link fence of height min 1.8m with 3.5m wide gate. The specifications for fencing shall be similar to those specified under Cl. No. 31.3 except fence post which shall be of MS angle (ISA 50x50x6)

33.7 The Gate of size 3.5m shall be of MS pipe (medium class conforming to IS: 1161) frame with hard drawn steel wire fabric mesh (50x50mmx3mm thick conforming to IS: 1566) including all accessories and fittings.

33.8 In addition to main gate a wicket gate of MS pipe (medium class conforming to IS: 1161) frame with 1.0 m width with hard drawn steel wire fabric (50x50x3mm thick conforming to IS: 1566) shall be provided for man entry for maintenance purpose.

33.9 The transformer yard fencing work shall conform to CEIG requirements.

33.10 The requirement of fire barrier wall between transformers shall be as per Electricity Rules and IS: 1646 recommendations. Minimum wall thickness shall be 230mm for RCC wall and 300mm for masonry wall.

34 Water Supply & Cleaning of Modules

34.1 The contractor shall design and install the effective module cleaning system.

34.2 A regular supply of suitable quantity of water shall be ensured by the contractor to cater day-to-day requirement of drinking water and for cleaning of PV modules during entire O&M period.

34.3 The Contractor shall estimate the water requirements for cleaning the photovoltaic modules at least once in two week or at closer frequency as per the soiling conditions prevailing at site, in order to operate the plant at its guaranteed plant performance. Also, the contractor is required to plan the water storage accordingly with provision of a tank of suitable capacity for this purpose. However, min. consumption of 2 Ltr / Sqm of surface area of SPV module shall be considered in estimation of required quantity of water storage.

34.4 Water used for drinking & PV module cleaning purpose shall generally be of potable quality and fit for cleaning the modules with TDS generally not more than 75 PPM. In case of higher salt contents, the water shall be thoroughly squeezed off to prevent salt deposition over module surface. However, water with TDS more than 200 PPM shall not be used directly for module cleaning without suitable treatment to control the TDS within acceptable limits. The water must be free from any grit and any physical contaminants that could damage the panel surface.

34.5 If required, for settlement of any grit/ unacceptable suspended particles in the water a settling tank shall be installed before the inlet of the storage tank. Suitable arrangement for discharge/ disposal of sediment/ slush shall be provided in silting chamber by gravity disposal in surface drain or with provision of sludge sump and pump of adequate capacity.

34.6 The module cleaning system shall include construction of RCC tank or supply and installation of Ground mounted PVC tank (s) of required storage capacity, pumps (including 1 No. standby pump), water supply mains and flexible hose pipes, taps, valves (NRV, Butterfly valve, Ball valve, Gate valve, PRV, scour valve etc.), Water hammer arrester(s), pressure gauge, flow meter etc. as per the planning & design.

34.7 In case of over ground water storage tank, the contractor shall check its effect on plant performance through shadow analysis. The PVC storage tank shall conform to IS: 12701. The valves shall conform to IS: 778. A suitable metal sheet canopy for protection from direct sunlight shall be provided over the tank area.

34.8 The water supply mains could be either of GI, uPVC or HDPE, however, the vertical pipe connecting supply main to the discharge point shall be of GI.

34.9 Masonry chamber shall be provided for Main gate valve at pump end. Whereas, as per requirements, at other locations either a masonry or GI/ HDPE pipe chamber may be provided.

34.10 Module cleaning procedure and pressure requirement at discharge point shall be as per the recommendation of PV module manufacturer. However, discharge pressure at outlet shall not be less than 50kg/cm2 (5 MPa) 59.11 All the pipes thus laid shall be buried in ground at least 150mm below FGL or laid above ground clamping on suitable concrete support blocks. In case of above ground piping only GI pipes shall be used.

35 Underground Water Tank

35.1 The top of the UG tank shall be 250 mm above FGL.

35.2 The tank shall have clear free board of 300mm above MWL.

35.3 The tank bottom shall have a slope of 1:100 towards drainage sump (500x500x500 mm deep). The slope shall be provided either in structural slab or in screed concrete (1:2:4) trawl finished. 1000x1000 mm size Manhole in roof slab and 20 mm MS rung ladder shall be provided for easy access to the storage tank and silting chamber for periodic cleaning. The manhole shall be covered with RCC precast cover. 50x50x6 mm MS angle with lugs shall be provided around precast cover and tank slab opening for edge protection. Rungs shall be painted with 2 coats of epoxy paint over 2 coats of primer.

35.4 The underground RCC tank shall be designed for following load conditions: • External earth pressure + hydrostatic pressure due to ground water table (to be considered at FGL for design purposes) + Surcharge of 20 kN/ Sqm and Tank Empty. • Tank full up to MWL and no external loads

35.5 The design shall conform to IS: 3370 with maximum crack width of 0.1mm for wall, bottom slab and roof slab. Min. grade of concrete shall be M30 (M35 in coastal areas, marshy and saturated soils) conforming to IS: 456. Suitable construction joints shall be provided as per provisions of IS: 3370 (Part 1). Water proofing admixture conforming to relevant BIS standard and of approved make shall be added to concrete as per manufacturer's recommendations.

35.6 The underground water tank shall be tested for water tightness as per the provisions of IS 3370 (Part-4). In case any leakage is noticed the same shall be repaired by injection of cement grout installing suitable nozzles around affected areas. Outside face of water tank in contact with water and soil and underside of roof slab shall be painted with 2 coats of epoxy paint.

36 Transmission Line Structures

36.1 Galvanized 220 kV and 132 kV Transmission Line towers, Tower extensions & accessories and 11 kV, 22kV, 22kV & 33 kV transmission poles, towers & accessories shall be designed following latest guidelines of respective SEB (State electricity board)/ STU (State transmission utility) and got approved from them before execution. In absence of SEB/ STU guidelines REC (Rural Electrification Corporation) standards may be followed. Support at corner with angle > 100 shall be provided with a 4-pole structure or a lattice tower structure. Use of PCC spun pole and RCC pole is not acceptable.

36.2 Approved copies of these designs & drawings shall be submitted to the employer for reference and record.

37 Miscellaneous structures

37.1 Support structure for weather monitoring device
37.1.1 Weather monitoring device shall be mounted on tubular steel pole of required height. The pole shall conform to IS: 2713.

37.1.2 The pole shall be secured to an independent RCC foundation structure through Base plate and Anchor bolt assembly.

37.1.3 200 long 20 dia. rods shall be welded to the pole at 300 mm C/c for access to the device for maintenance purpose.

37.1.4 The support structure shall be hot dip galvanized.

37.2 Support structures for SMU

37.2.1 SMU shall not be supported from MMS and shall have an independent structural steel supporting frame of galvanized ISMC 75, secured to an independent RCC foundation structure.

37.2.2 The support structure shall be of adequate height to ensure either min. ground clearance of 1.2m to SMU unit or HFL + 100mm, whichever is higher.

37.3 LA Mast and Foundation

37.3.1 The LA mast shall be a self-supporting structure with GI tubular pole of required height. The pole shall confirm to IS: 2713.

37.3.2 The pole shall be secured to an independent RCC foundation structure through Base plate & Anchor bolt assembly.

B. Quality Assurance and Inspection of Civil Works

38. Introduction
38.1 This part of the specification covers the sampling, testing and quality assurance requirement (including construction tolerances and acceptance criteria) for all civil and structural works covered in this specification.

38.2 This part of the technical specification shall be read in conjunction with other parts of the technical specifications, general technical requirements & erection conditions of the contract which covers common QA requirements. Wherever IS code or standards have been referred they shall be the latest revisions.

38.3 The rate for respective items of work or price shall include the cost for all works, activities, equipment, instrument, personnel, material etc. whatsoever associated to comply with sampling, testing and quality assurance requirement including construction tolerances and acceptance criteria and as specified in subsequent clauses of this part of the technical specifications.

38.4 The QA and QC activities in all respects as specified in the technical specifications/ drawings / data sheets / quality plans / contract documents shall be carried out at no extra cost.

38.5 The contractor shall prepare detailed construction and erection methodology scheme

which shall be compatible to the requirements of the desired progress of work execution, quality measures, prior approvals from statutory authorities etc. if any and the same shall be got approved from the Engineer.

38.6 If required, work methodology may be revised/ reviewed at every stage of execution of work at site, to suit the site conditions, work progress commensurate with project schedule by the contractor at no extra cost to the Engineer

39 QA and QC Manpower

39.1 The contractor shall nominate one overall QA coordinator for the contract detailing the name, designation, contact details and address at the time of post bid discussions.

39.2 All correspondence related to Quality Assurance shall be addressed by the contractor's QA coordinator to the Engineer.

39.3 Employer/ Consultant shall address all correspondence related to Quality issues to the contractor's QA coordinator. The contractor's QA coordinator shall be responsible for co-ordination of Quality activities between various divisions of the contractor and their sub-vendors on one hand & with Engineer on the other hand.

39.4 The contractor shall appoint a dedicated, experienced and competent QA & QC incharge at site, preferably directly reporting to the Project Manager, supported as necessary by experienced personnel, to ensure the effective implementation of the approved QAP.

39.5 The contractor shall finalize and submit a deployment schedule of QA & QC personnel along with their details to Engineer for approval/ acceptance and further shall ensure their availability well before the start of the concern activity.

40 Laboratory and Field Testing

40.1 The contractor shall make necessary provisions to provide all facilities required for QA & QC activities by setting up a field laboratory for QA and QC activities in line with the indicative field QA & QC laboratory set-up.

40.2 The Laboratory building shall be constructed and installed with adequate facilities to meet the requirement of envisaged test setup. Temperature and humidity controls shall be available wherever necessary during testing of samples.

40.3 The quality plan shall identify the testing equipment/ instrument, which the contractor shall deploy and equip the field quality laboratory for meeting the field quality plan requirements.

40.4 The contractor shall furnish a comprehensive list of testing equipment/ instrument required to meet the planned/scheduled tests for the execution of works for Engineer's acceptance/ approval.

40.5 The contractor shall mobilize the requisite laboratory equipment and QA & QC manpower at least 15 days prior to the planned test activity as per the schedule of tests.

40.6 In case contractor desires to hire the services of any established laboratory nearby for any field tests then he shall ensure that the subject laboratory is well equipped with all

requisite testing facilities and qualified QA & QC staff and this shall not affect in anyway the work progress.

40.7 All equipment and instruments in the laboratory/ field shall be calibrated before the commencement of tests and then at regular intervals, as per the manufacturer's recommendation and as directed by the Engineer. The calibration certificates shall specify the fitness of the equipment and instruments within the limit of tolerance for use. Contractor shall arrange for calibration of equipment and instruments by an NABL / NPL accredited agency and the calibration report shall be submitted to Engineer.

40.8 The tests which cannot be carried out in the field laboratory shall be done at a laboratory of repute. This includes selected IITs, NCB, CSMRS, reputed government / autonomous laboratories / organizations, NITs and other reputed testing laboratories. The test samples for such test shall be jointly selected and sealed by the engineer and thereafter these shall be sent to the concerned laboratory through the covering letter signed by Engineer. Test report along with the recommendations shall be obtained from the laboratories without delay and submitted to Engineer.

40.9 Based on the schedule of work agreed with the Engineer and the approved FQP, the contractor shall prepare a schedule of tests and submit them to the Engineer and organize to carry out the tests as scheduled/agreed.

41 Sampling and Testing of Construction Materials

41.1 The method of sampling for testing of construction materials and work / job samples shall be as per the relevant BIS / standards / codes and in line with the requirements of the technical specifications / quality plans.

41.2 All samples shall be jointly drawn, signed and sealed wherever required, by the contractor and the engineer or his authorized representative.

41.3 The contractor shall carry out testing in accordance with the relevant IS standards/ codes and in line with the requirements of the technical specifications / quality plans. Where no specific testing procedure is mentioned, the tests shall be carried out as per the best prevalent engineering practices and to the directions of the Engineer.

41.4 All testing shall be done in the presence of Engineer or his authorized representative in a NABL accredited / Govt. Laboratory acceptable to Engineer.

41.5 The test samples shall be jointly selected and sealed and signed by the Site-in-charge and thereafter these shall be sent to the concerned laboratory.

41.6 The test report along with the recommendations shall be obtained from the laboratory without delay and submitted to Engineer.

42 Purchase and Service

42.1 All structural steel shall be procured only from main steel producers In case of availability of some of the sections with main steel producers, the contractor may propose to procure the sections from the re-rollers of the main steel producers, the name of such re-rollers will have to be cleared by the Engineer for which details such as BIS approval, main steel producer's approval, past experience for production of sections of specified material, details of machines, plant, testing facilities etc.

42.2 Confirmation that the process control and manufacturing of steel sections by re-rollers shall be same as that of main steel producers, that billets for re-rolling will only be sourced from main steel producers shall be furnished with regard to re-roller.

42.3 For Module Mounting Structures (MMS), sources of steel other than those specified under this clause may also be used subject to the condition that they otherwise meet the requirements of the Technical Specifications / Bid documents. Even after clearance of re-rollers, induction of billets with identified and correlated Mill test certificates (MTC) in the process of re-rolling, sampling of steel, quality checks thereof and stamping of final product for further identification and correlation with MTC prior to dispatch shall be the responsibility of the contractor and these shall be performed in presence of the authorized representative of the main Contractor.

42.4 Reinforcement steel shall be procured only from main steel producers and Mill test certificates (MTC) shall be obtained and submitted to the Engineer for correlation.

43 Field Quality Plan

43.1 Well before the start of the work, the contractor shall prepare and submit the Field Quality Plans to Employer for approval, which shall detail out for all the works, equipment, services, quality practices and procedures etc. in line with the requirement of the technical specifications to be followed by the contractor at site.

43.2 This FQP shall cover all the items / activities covered in the contract / schedule of items required, right from material procurement to completion of the work at site.

43.3 An Indicative Field & Manufacturing Quality Plan for civil, structural and MMS works is enclosed with this specification for reference as Annexure-B.

44 General QA Requirements

44.1 The contractor shall ensure that the works, BOIs and services under the scope of Contract, whether manufactured or performed within contractor's works or at his subcontractor's premises or at the project site or at any other place of work, are in accordance with Technical specification, applicable standards / codes, approved drawings / data sheets / quality plans and BOQ. All the works, BOIs and services shall be carried out as per the best prevalent engineering practices and to the directions of the Engineer.

Equipment UOM	Approx. Qty.
Cube moulds for cement testing nos.	4
Sieve shaker nos.	1
Sieve for sand, coarse and fine aggregate set	1
Sieve for coarse aggregate set	1
Slump testing equipment nos.	6
Oven nos.	2
Physical balance nos.	1
Thermometer nos.	4
Burret nos.	2
Measuring cylinder nos.	9
Measuring flask nos.	3
Compression testing machine set	1
Cube mould for concrete nos.	10
Mechanical weighing machine nos.	1

(100kg capacity)
Drum type concrete mixer (for trial mixes) nos. 1
Proctor testing equipment set 1

44.2 Notes

44.3 The equipment listed above is indicative and minimum required. Additional equipment, if any, required for successful completion of work shall be provided /arranged by the contractor.
44.4 All test reports/ inspection reports shall be submitted in soft copy also and shall be available at site for easy access to the Engineer.

44.5 Based on the schedule (L2/L3 Network), Quality control & Quality Assurance Work plan shall be finalized by the contractor and the same shall be submitted to Engineer for acceptance/approval.

45. PROTECTION OF WORK

The Contractor shall have total responsibility for protecting his works till it is finally taken over by the Employer. No claim will be entertained by the Employer or the representative of the Employer for any damage or loss to the Contractor's works and the Contractor shall be responsible for complete restoration of the damaged works to original conditions to comply with the specification and drawings. Should any such damage to the Contractor's Works occur because of other party not being under his supervision or control, the Contractor shall make his claim directly with the party
Concerned.

If disagreement or conflict or dispute develops between the Contractor and the other party or parties concerned regarding the responsibility for damage to the Contractor's Works the same shall be rectified. The Contractor shall not cause any delay in the repair of such damaged Works because of any delay in the resolution of such disputes. The Contractor shall proceed to repair the Work immediately and no cause thereof will be assigned
Pending resolution of such disputes.

46. EMPLOYMENT OF LABOUR

In addition to all local laws and regulations pertaining to the employment of labour to be complied with by the Contractor pursuant to GCC, the Contractor will be expected to employ on the work only his regular skilled employees with experience of the particular work. No female labour shall be employed after darkness. No person below the age of eighteen years shall be employed. All travelling expenses including provisions of all necessary transport to and from Site, lodging allowances and other payments to the Contractor's employees shall be the sole responsibility of the Contractor. The hours of work on the Site shall be decided by the Employer and the Contractor shall adhere to it. Working hours will normally be eight (8) hours per day - Monday through Saturday. Contractor's employees shall wear identification badges while on work at Site.

In case the Employer becomes liable to pay any wages or dues to the labour or any Government agency under any of the provisions of the Minimum Wages Act, Workmen Compensation Act, Contact Labour Regulation Abolition Act or any other law due to act of

omission of the Contractor, the Employer may make such payments and shall recover the same from the Contractors Bills.
Electricity and water shall be the responsibility of the contractor.

47. FACILITIES TO BE PROVIDED BY THE CONTRACTOR

47.1 Contractor's site office Establishment

The Contractor shall establish a site office at the site and keep posted unauthorized representative for the purpose of the contract, pursuant to GCC.

47.2 Tools, tackles and scaffoldings

The Contractor shall provide all the construction equipment's, tools, tackles and scaffoldings required for pre-assembly, installation, testing, commissioning and conducting Guarantee tests of the equipment's covered under the Contract. He shall submit a list of all such materials to the
Employer before the commencement of pre-assembly at Site. These tools and tackles shall not be removed from the Site without the written permission of the Employer. The Contractor shall arrange Dozer, Hydra, Cranes, Trailer, etc. for the purpose of fabrication, erection and commissioning.

47.3 First-aid

The Contractor shall provide necessary first-aid facilities for all his employees, representatives and workmen working at the Site. Enough number of Contractor's personnel shall be trained in administering first-aid. The Employer will provide the Contractor, in case of any emergency, the services of an ambulance for transportation to the nearest hospital.

47.4 Cleanliness

a) The Contractor shall be responsible for keeping the entire area allotted to him clean and free from rubbish, debris etc. during the period of Contract. The Contractor shall employ enough number of special personnel to thoroughly clean his work-area at least once in a day. All such rubbish and scrap material shall be stacked or disposed in a place to be identified by the Employer. Materials and stores shall be so arranged to permit easy cleaning of the area. In areas where equipment might drip oil and cause damage to the floor surface, a suitable protective cover of a flame resistant, oil proof sheet shall be provided to protect the floor from such damage.

b) Similarly the labour colony, the offices and the residential areas of the Contractor's employees and workmen shall be kept clean and neat to the entire satisfaction of the Employer. Proper sanitary arrangements shall be provided by the Contractor, in the work-areas, office and residential areas of the Contractor.

47.5 FIRE PROTECTION

Required Fire Protection Measures are described under Clause titled

"**WORK &SAFETY REGULATIONS"** of this Sub-section.

47.6 SECURITY

The Contractor shall have total responsibility for all equipment and materials in his custody stores, loose, semi-assembled and/or erected by him at Site. The Contractor shall make suitable security arrangements including employment of security personnel to ensure the protection of all materials, equipment and works from theft, fire, pilferage and any other damages and loss. All materials of the Contractor shall enter and leave the Employer Site only with the written permission of the Employer in the prescribed manner.

47.7 CONTRACTOR'S AREA LIMITS

The Employer will mark-out the boundary limits of access roads, parking spaces, storage and construction areas for the Contractor and the Contractor shall not trespass the areas not so marked out for him. The Contractor shall be responsible to ensure that none of his personnel move out of the areas marked out for his operations. In case of such a need for the Contactor's personnel to work out of the areas marked out for him the same shall be done only with the written permission of the Employer.

47.8 CONTRACTOR'S CO-OPERATION WITH THE EMPLOYER

In case where the performance of the erection work by the Contractor affects the operation of the system facilities of the Employer, such erection work of the Contractor shall be scheduled to be performed only in the manner stipulated by the Employer and the same shall be acceptable at all
times to the Contractor. The Employer may impose such restrictions on the facilities provided to the Contractor such as electricity, etc. as he may think fit in the interest of the Employer and the Contractor shall strictly adhere to such restrictions and co-operate with the Employer.

It will be the responsibility of the Contractor to provide all necessary temporary instrumentation and other measuring devices required during start-up and operation of the equipment systems which are erected by him. The Contractor shall also be responsible for flushing and initial filling of all the oil and lubricants required for the equipment furnished and installed by him, so as to make such equipment ready for operation. The Contractor shall be responsible for supplying such flushing oil and other lubricants unless otherwise specified elsewhere in documents and specifications

47.9 MATERIALS HANDLING AND STORAGE

All the equipment's furnished under the Contract and arriving at Site shall be promptly received, unloaded and transported and stored in the storage spaces by the Contractor .Contractor shall be responsible for examining all the shipment and notify the Employer immediately of any damage, shortage, discrepancy etc. for the purpose of Employer's information only. The Contractor shall submit to the Employer every week a report detailing all the receipts during the week.

However, the Contractor shall be solely responsible for any shortages or damage in transit, handling and /or in storage and erection of the equipment at Site. Any demurrage, wharf age and other such charges claimed by the transporters, railways etc. shall be to the account of the Contractor. The Contractor shall maintain an accurate and exhaustive record detailing out the list of all equipment received by him for the purpose of erection and keep such record open for the inspection of the Employer. All equipment shall be

handled very carefully to prevent any damage or loss. No bare wire ropes, slings, etc. shall be used for unloading and/or handling of the equipment without the specific written permission of the Employer. The equipment stored shall be properly protected to prevent damage either to the equipment or to the floor where they are stored. The equipment from the store shall be moved to the actual location at the appropriate time so as to avoid damage of such equipment at Site.

The actual location at the appropriate time so as to avoid damage of such equipment at Site. The Contractor shall ensure that all the packing materials and protection devices used for the various equipment's during transit and storage are removed before the equipment are installed. The consumables and other supplies likely to deteriorate due to storage must be thoroughly protected and stored in a suitable manner to prevent damage or deterioration in quality by storage. All the materials stored in the open or dusty location must be covered with suitable Weather proof and flameproof covering material wherever applicable.

If the materials belonging to the Contractor are stored in areas other than those earmarked for him, the Employer will have the right to get it moved to the place earmarked for the Contractor at the Contractor's cost. The Contractor shall be responsible for making suitable indoor storage facilities to store all equipment which require indoor storage. Normally, all the electrical equipment's such as motors, control gear, generators, exciters and consumables like electrodes, lubricants etc. shall be stored in the closed storage space. The Employer, in addition, may direct the Contractor to move certain other materials, which in his opinion will require indoor storage, to indoor storage areas which the Contractor shall strictly comply with.

47.10 CONSTRUCTION MANAGEMENT

The field activities of the Contractors working at Site, will be coordinated by the Employer and the Employer decision shall be final in resolving any disputes or conflicts between the Contractor and other Contractors and tradesmen of the Employer regarding scheduling and co- ordination of work. Such decision by the Employer shall not be a cause for extra compensation or extension of time for the Contractor.

The Employer shall hold weekly meetings of all the Contractors working at Site, at time and place to be designated by the Employer. The Contractor shall attend such meetings and take notes of discussions during the meeting and the decisions of the Employer and shall strictly adhere to those decisions in performing his Works. In addition to the above weekly meeting, the Employer may call for other meeting either with individual Contractors or with selected number of Contractors and in such a case the Contractor if called, will also attend such meetings. Time is the essence of the Contract and the Contractor shall be responsible for performance of his works in accordance with the specified construction schedule.

If at any time, the Contractor is falling behind the schedule, he shall take necessary action to make good for such delays by increasing his work force or by working overtime or otherwise accelerate the progress of the work to comply with the schedule and shall communicate such actions in writing to the Employer, satisfying that his action will

compensate for the delay. The Contractor shall not be allowed any extra compensation for such action. The Employer shall however not be responsible for provision of additional labour
and or materials or supply or any other services to the Contractor except for theca-ordination work between various Contractors as set out earlier.

47.11 FIELD OFFICE RECORDS

The Contractor shall maintain at his Site Office up-to- date copies of all drawings, specifications and other Contract Documents and any other supplementary data complete with all the latest revisions thereto. The Contractor shall also maintain in addition the continuous record of all changes to the above Contract Documents, drawings, specifications, supplementary data, etc. effected at the field and on completion of his total assignment under the Contract shall incorporate all such changes on the drawings and other Engineering data to indicate as installed conditions of the equipment furnished and erected under the Contract. Such drawings and Engineering data shall be submitted to the Employer in required number of copies.

47.12 CONTRACTOR'S MATERIALS BROUGHT ON TO SITE

The Contractor shall bring to Site all equipment, components, parts, materials, including construction equipment, tools and tackles for the purpose of the Works under intimation to the Employer. All such goods shall, from the time of their being brought vest in the Employer, but may be used for the purpose of the Works only and shall not on any account be removed or taken away by the Contractor without the written permission of the Employer. The Contractor shall nevertheless be solely liable and responsible for any loss or destruction thereof and damage
thereto.

The Employer shall have a lien on such goods for any sum or sums which may at any time be due or owing to him by the Contractor, under, in respect of or by reasons of the Contract. After giving a fifteen (15) days' notice in writing of his intention to do so, the Employer shall be at liberty to sell and dispose off any such goods, in such manner as he shall think fit including public auction or private treaty and to apply the proceeds in or towards the satisfaction of such sum or sums due as aforesaid. After the completion of the Works, the Contractor shall remove from the Site under the direction of the Employer the materials such as construction equipment, erection tools and tackles, scaffolding etc. with the written permission of the Employer. If the Contractor fails to remove such materials, within fifteen (15) days of issue of a notice by the Employer to do so then the Employer shall have the liberty to dispose of such materials.

47.13 PROTECTION OF PROPERTY AND CONTRACTOR'S LIABILITY

The Contractor shall be responsible for any damage resulting from his operations. He shall also be responsible for protection of all persons including members of public and employees of the Employer and the employees of other Contractors and Sub- Contractors and all public and private property including structures, building, other plants and equipment's and utilities either above or below the ground.

The Contractor will ensure provision of necessary safety equipment such as barriers, sign - boards, warning lights and alarms, etc. to provide adequate protection to persons and property. The Contractor shall be responsible to give reasonable notice to the Employer and the Employers of public or private property and utilities when such property and utilities are likely to get damaged or injured during the performance of his Works and shall make all necessary arrangements
with such Employers, related to removal and/or replacement or protection of such property and utilities.

47.14 INSURANCE

In addition to the conditions covered under the Clause entitled "Insurance" in Section General Conditions of Contract (GCC), the following provisions will also apply to the portion of works to be done beyond the Contractor's own or his Sub-Contractor's manufacturing Works.

47.15 Workmen's Compensation Insurance

This insurance shall protect the Contractor against all claims applicable under the Workmen's Compensation Act, 1948 (Government of India). This policy shall also cover the Contractor against claims for injury, disability disease or death of his or his Sub-Contractor's employees, which for any
reason are not covered under the Workmen's Compensation Act, 1948.The liabilities shall not be less than the following: Workmen's Compensation - As per Statutory Provisions Employee's Liability - As per Statutory Provisions

47.16 UNFAVOURABLE WORKING CONDITIONS

The Contractor shall confine all his field operations to those works which can be performed without subjecting the equipment and materials to adverse effects during inclement weather conditions, like monsoon, storms, etc. and during other unfavourable construction conditions. No field activities shall be performed by the Contractor under conditions which might adversely affect the quality and efficiency thereof, unless special precautions or measures are taken by the Contractor in a proper and satisfactory manner in the performance of such Works and with the
Concurrence of the Employer. Such unfavourable construction conditions will in no way relieve the Contractor of his responsibility to perform the Works as per the schedule.

47.17 PROTECTION OF MONUMENTS AND REFERENCE POINTS

The Contractor shall ensure that any finds such as relic, antiquity, coins, fossils, etc. which he may come across during the course of performance of his Works either during excavation or elsewhere, are properly protected and handed over to the Employer. Similarly the Contractor shall ensure that the bench marks, reference points, etc., which are marked either with the help of Employer or by the Employer shall not be disturbed in any way during the performance of his Works. If, any work is to be performed which disturb such reference, the same shall be done only after these are
transferred to other suitable locations under the direction of the Employer. The Contractor shall provide all necessary materials and assistance for such relocation of reference points etc.

47.18 Emergency Action Plan.

The contractor shall prepare an emergency action plan approved by his competent authority to handle any emergency occurred during construction work. Regular mock drills shall be organized to practice this emergency plan. The Emergency Action Plan should be widely circulated to all the employees and suitable infrastructure shall be provided to handle the emergencies.

47.19 Explosives.

The contractor shall take all precautions while handling, using, storing or transporting of all explosives. Before usage of any explosive necessary warning /danger signals be erected at conspicuous places to warn the workers and general public. The contractor should strictly ensure that all measures and precautions required to be complied for use, handling, storing or transportation of explosives under the rules framed under the Explosives Act, 1884.

47.20 Coffer Dam and Caissons (if required)

The Contractor shall ensure that the cofferdam and caissons are of good construction and adequate strength. The cofferdam and caissons should be provided with adequate means for workers to reach safely at the top of such dams in the event of an in-rush of water. The workers should be allowed to work in a cofferdam or caisson only after inspection and found safe by Engineer-in –charge. Such inspection is to be maintained in a Register. Where the workers are

employed to work in a compressed air environment at the work site of coffer dam or caissons a Construction Medical Officer assisted by a Nurse or trained first aid attendant should be available at all the times during such work.

47.21 Fencing of Machinery.

The contractor shall provide suitable fencing or guard to all dangerous and moving parts of machinery. The contractor shall not allow any of the employees to clean, lubricate, repair, adjust or examine during machinery in motion, which may cause injury to the person. Working Platforms should be fenced and shall have means of access

47.22 Carrying of Excessive Weight by a Worker.

The worker shall not be allowed to lift by hand or carry over his head, back or shoulder more than the maximum limit set by the prescribed rules for the construction Workers.

47.23 Dangerous and Harmful Gases/Equipment.

The contractor shall ensure that the workers are not exposed to any harmful gases during any construction activity including excavation, tunnelling, confined spaces etc. The contractor should not allow any worker to go into the confined space unless it is certified by Engineer in-charge to be safe and fit for the entry to such work place. Proper record and work permits should be followed to carry out such works.

47.24 Overhead Protection.

The contractor shall ensure that any area exposed to risk of falling materials, articles or objects is roped off or cordoned off or otherwise suitably guarded from inadvertent entry of any person. Wherever there is a possibility of falling of any material, equipment or

construction workers while working at heights, a suitable and adequate safety net should be provided. The safety net should be in accordance with BIS Standards.

47.25 Working at Heights (If applicable).

a) All working platforms, ways and other places of construction work shall be free from accumulations of debris or any other material causing obstructions and tripping.

b) Wherever workers are exposed to the hazard of falling into water, the contractor shall provide adequate equipment for saving the employees from drowning and rescuing from such hazards. The contractor shall provide boat or launch equipped with sufficient number of life buoys, life jackets etc. manned with trained personnel at the site of such work.

c) Every opening at elevation from ground level through which a building worker, vehicle, material equipment etc. may fall at a construction work shall be covered and/or guarded suitably by the contractor to prevent such falls.

d) Wherever the workers are exposed to the hazards of falling from height, the contractor shall provide full harness safety belts fitted with fall arresting systems to all the employees working at higher elevations and life line of 8mm diameter wire rope with turn buckles for anchoring the safety belts while working or moving at higher elevations. Safety nets shall also be provided for saving them from fall from heights and such equipment should be in accordance with BIS standards.

e) Wherever there is a possibility of falling of any material, equipment or construction workers while working at heights, a suitable and adequate safety net should be provided. The safety net should be in accordance with BIS Standards.

f) The contractor shall provide standard prefabricated ladders on the columns where the workers are required to use them as an access for higher elevations till permanent staircase is provided. The workers shall be provided with safety belts fitted with suitable fall arresting system (fall arresters) for climbing/getting down through ladders to prevent fail from height.

g) Rungs shall not be welded on columns. All the Stairs shall be provided with handrails immediately after its erection.

47.26 Handling of Hazardous Chemicals.

a) The Contractor will notify well in advance to the Engineer-in-charge of his intention to bring to the Site any container filled with liquid or gaseous fuel or explosive or petroleum substance or such chemicals which may involve hazards. SCCL /BHEL shall have the right to prescribe the conditions, under which such container is to be stored, handled and used during the performance of the works and the Contract shall strictly adhere to and comply with such instructions. The Engineer-in-charge shall have the right at his sole discretion to inspect any such container or such construction plant / equipment for which material in the container is required to be used

And if in his opinion, its use is not safe; he may forbid its use. No claim due to such prohibition shall be entertained by SCCL and SCCL shall not entertain any claim of the Contractor towards additional safety provisions /conditions to be provided for / constructed.

b) Further, any such decision of the Engineer-in-charge shall not, in any way, absolve the Contractor of his responsibilities and in case, use of such a container or entry thereof into the Site area is forbidden by SCCL/BHEL, the Contractor shall use alternative methods with the approval of the SCCL /BHEL without any cost implication to the SCCL /BHEL or extension of work schedule.

c) Where it is necessary to provide and / or store petroleum products or petroleum mixtures and explosives, the Contractor shall be responsible for carrying-out such provision and / or storage in accordance with the rules and regulations laid down in Petroleum Act 1934, Explosives Act 1948, and Petroleum and Carbide of Calcium Manual published by the Chief Inspector of Explosives of India. All such storage shall have prior approval of the Engineer In-charge In case any approvals are necessary from the Chief Inspector (Explosives) or any statutory authorities; the Contractor shall be responsible for obtaining the same.

d) The Contractor shall be fully responsible for the safe storage of his and his Sub-contractor's radio-active sources in accordance with BARC/DAE (Bhabha Atomic Research Centre/ Department of Atomic Energy, Govt. of India) Rules and other applicable provisions- AU precautionary measures stipulated by BARC/DAE in connection with use, the contractor would take
Storage and handling of such material.

e) The contractor shall provide suitable personal protective equipment's to the workers who are handling the hazardous and corrosive substances including alkalis and acids.

f) As a precautionary measure the contractor should keep the bottles filled with distilled water in cupboard / Boxes near work place for emergency eyewash by worker exposed to such hazardous chemicals.

47.27 Eye Protection.
The contractor shall provide suitable personal protective equipment to his workmen depending upon the nature of hazards and ensure their usage by the workers engaged in operations like welding, cutting, chipping, grinding or similar operations which may cause injuries to his eyes.

47.28 Excavation.
The contractor shall take all necessary measures during excavation to prevent the hazards of falling or sliding material or article from any bank or side of such excavation which is more than one and a half meter above his footing by providing adequate piling, shoring, bracing etc. against such bank or sides. Adequate and suitable warning signs shall be put up at conspicuous places at the excavation work to prevent any persons or vehicles falling into the excavation trench. No worker should be allowed to work where he may be stuck or endangered by excavation machinery or collapse of excavations or trenches.

47.29 Electrical Hazards.

a) The contractor should ensure that all electrical installations at the construction work comply with the requirements of latest electricity acts /rules.

b) The contractor shall take all adequate measures to prevent any worker from coming into physical contact with any electrical equipment or apparatus, machines or live electrical circuits which may cause electrical hazards during the construction work. The contractor shall provide the sufficient ELCBs / RCCBs for all the portable equipment's, electrical switchboards, distribution panels etc. to prevent electrical shocks.

c) The contractor should ensure use of single / double insulated hand tools or low voltage i.e., 110 volts hand tools.

d) The contractor should also ensure that all temporary electrical installations at the construction works are provided with earth leakage circuit breakers.

e) No electric cable in use by the Contractor /Employer will be disturbed without prior permission. No weight of any description will be imposed on any cable and no ladder or similar equipment will rest against or attached to it.

f) The Contractor shall employ necessary number of qualified, full time Electricians/electrical supervisors to maintain his temporary electrical installations.

47.30 Vehicular Traffic.

The contractor should employ vehicle drivers who hold a valid driving license under the Motor Vehicles Act, 1988.

47.31 Lifting Appliances, Tools & Tackles. Lifting Gear and Pressure Plant & Equipment etc.

The contractor shall ensure alt the lifting appliances, tools & tackles including cranes etc., lifting gear including fixed or movable and any plant or gear, hoists, Pressure Plant and equipment etc. are in good condition and shall be examined by competent person and only certified shall be used at sites. Periodical Examination and the tests for all lifting / hoisting equipment & tackles shall be

Carried out. A register of such examinations and tests shall be properly maintained by the Contractor and will be promptly produced as and when desired by the Engineer I/c or by the person authorized by him.

47.32 Excessive Noise, Vibration.

The contractor shall take adequate measures to protect the workers against the harmful effect of excessive noise or vibration. The noise should not exceed the limits prescribed under the concerned rules. Noise Pollution (Regulation and Control) Rules, 2000.

47.33 Electrical Installations.

a)The Contractor shall not interfere or disturb electric fuses, wiring and other electrical equipment ongoing to the Employer or other contractors under any circumstances, whatsoever, unless expressly permitted in writing by the Engineer I/c to handle such fuses, wiring or electrical equipment. Before the

b) Contractor connects any electrical appliances to any plug or socket SCCL ongoing to the other contractor or the SCCL /BHEL, he shall :-Satisfy the Engineer I/C that the appliance is in good working condition; Inform the Engineer I/C of the maximum current rating, voltage and phases of the appliances; Obtain permission of the Engineer-in-Charge detailing the sockets to which the appliances may be connected.

c) The Engineer in-charge will not grant permission to connect until he is satisfied that :- The appliance is in good condition and is fitted with suitable plug; having earth connection with the body. Wherever armoured / metallic sheathed multi core cable is used, the same armoured / sheathed should be connected to earth.

d) No repair work shall be carried out on any live equipment. The Engineer in-Charge must declare the equipment safe and a permit to work shall be issued by the SCCL /BHEL / contractor as the case may be to carry out any repair/ maintenance work. While working on electric lines / equipment's whether live or dead, suitable type and sufficient quantity of tools will have to be provided by the contractor to electricians / workmen / Officers.

e) The contractor shall employ necessary number of qualified, full time Electricians / Electrical Supervisors to maintain his temporary electrical installation.

f) The installations are provided with suitable ELCBs and RCCBs wherever required.

47.34 Safety Organisation.

a) The contractor employing more than 250 workmen whether temporary, casual, probationary, regular or permanent shall employ at least one fulltime safety officer exclusively to supervise safety aspects of the equipments and workmen, who will coordinate with the SCCL /BHEL Safety Officer. Further requirement of safety officers, if any, shall be guided by Rule 209 of The Building and Other Construction Worker (Regulation of Employment and Conditions of Service) Central Rule 1998. In case the work is being carried out through subcontractor, the employees / workmen of the sub-contractor shall also be considered as the contractor's employees/workmen for the above purpose.

b) In case of contractor deploying less than 250 workmen he should designate one of his Engineer / supervisor or the contractor himself (if he is directly supervising the work) as safety officer in addition to his existing responsibilities. The Engineer/ supervisor should get at least 2 days safety
training from any reputed organization or from SCCL/BHEL before resuming the work. If already trained in past the declaration along with training. Certificate to be furnished to SCCL safety officer.

c) The name and address of such Safety Officer of the Contractor will be promptly informed in writing to the EIC with a copy to the Project Safety Officer before he starts work or immediately after any change of the incumbent is made during currency of the Contract.

47.35 Reporting of Accident and Investigation.
In case any accident occurs during the construction / erection or other associated activities undertaken by the Contractor thereby causing any near miss, minor or major or fatal injury to his employees due to any reason, whatsoever, it shall be the responsibility of the Contractor to promptly inform the same to the Engineer in charge, SCCL /BHEL Safety Officer with a copy to SCCL /BHEL Head of Project in the prescribed form and also to all the authorities envisaged under the applicable laws.

48. Right to stop Work.
a) The Engineer I/C shall have the right at his sole discretion to stop the work, if in his opinion the work is being carried out in such a -way that it may cause accidents and endanger the safety of the persons and / or property, and / or equipment's. In such cases, the contractor shall be informed in
Writing about the nature of hazards and possible injury / accident and he shall comply to remove shortcomings promptly. The Contractor after stopping the specific work can, if felt necessary appeal against the order of stoppage of work to the Project Manager within 3 days of such stoppage of work and decision of the Project Manager in this respect shall be conclusive and binding on the Contractor.

b) The Contractor shall not be entitled for any damages / compensation for stoppage of work due to safety reasons and the period of such stoppage of work shall not be taken as an extension of time for Completion of the Facilities and will not be the ground for waiver of levy of liquidated Damages.

49. Fire Protection.
a) The contractor shall provide sufficient fire extinguishers at place /s of work. The fire extinguishers shall be properly maintained as per relevant BIS Standards. The employees shall be trained to operate the fire extinguishers / equipment.

b) The Contractor shall provide enough fire protection equipment of the types and number for the warehouses, office, temporary structures, labour colony area etc. Access to such fire protection equipment, shall be easy and kept open at all time.

c) The work procedures that are to be used during the erection shall be those which minimise fire hazards to the extent practicable. Combustible materials, combustible waste and rubbish shall be collected and removed from the Site at least once each day. Fuels, oils and volatile or flammable
Materials shall be stored away from the construction and equipment and materials storage areas in safe containers. Untreated canvas, paper, plastic or other flammable flexible materials shall not at all be used at Site for any other purpose unless otherwise specified. If any such materials are
Received with the equipment at the Site, the same shall be removed and replaced with acceptable material before moving into the construction or storage area.

d) Similarly corrugated paper fabricated cartons etc. will not be permitted in the construction area either for storage or for handling of materials. All such materials used shall be of water proof and flame resistant type. All the other materials such as working

drawings, plans etc. which are combustible but are essential for the works to be executed shall be protected against combustion resulting from welding sparks, cutting flames and other similar fire sources.
e) All the Contractor's supervisory personnel and sufficient number of workers shall be trained for fire-fighting and shall be assigned specific fire protection duties. Enough of such trained personnel must be available at the Site during the entire period of the Contract.

50. Penalties.
a) If the Contractor fails in providing safe working environment as per the Safety Rules of SCCL /BHEL or continues the work even after being instructed to stop the work by the Engineer –in- Charge as provided above, the Contractor shall be penalized at the rate of Rs. 25,000/-- per day or part thereof till the instructions are complied with and so certified by the Engineer I/C- However, in case of accident, the provisions contained below shall also apply in addition to the penalties mentioned in this sub clause.

b) If the Contractor does not take all safety precautions and / or fails to comply with the Safety Rules as prescribed by the Employer or under the applicable law for the safety of the plant and equipment and for the safety of personnel and the contractor does not prevent hazardous conditions which cause injury to this own employees or employees of other contractors, or SCCL 's employees or any other person who are at the Site or adjacent thereto, the Contractor shall be responsible for payment of penalty to SCCL as per the following schedule; -

a) Fatal injury or accident causing death: Penalty @10% of contract value death or Rs. 5,00,000/- per person, whichever is less.

b) Major injuries or accident causing 25% or more permanent disablement to workmen or employees. Penalty @2.5 % of contract value or Rs.1,00,000/- per person, whichever is less.
Permanent disablement shall have the same meaning as indicated in The Workmen's Compensation Act' 1923. The penalty mentioned above shall be in addition to the compensation payable to the workmen / employees under the relevant provisions of the Workmen's Compensation Act' 1923and rules framed there under or any other applicable laws as applicable from time to time.

c) If any contractor worker found working without using the safety equipment like safety helmet, safety shoes, safety belts, etc. or without anchoring the safety belts while working at height the Engineer in-charge / Safety Officer of SCCL shall have the right to penalize the contractor for Rs. 200/- per person per day and such worker shall be sent out of the workplace immediately and shall not be allowed to work on that day. Engineer in charge/ Safety Officer of SCCL will also issue a notice in this regard to the contractor.

d) If two or more fatal accidents occur at same SCCL site under the control of contractor during the period of contract and he has:-
(1) Not complied with keeping adequate PPEs in stock,
(2) Defaulted in providing PPR's to his workmen
(3) Not followed statutory requirements / SCCL safety rules

(4) Been issued warning notice/s by SCCL head of the project on non
Observance of safety norms
(5) Not provided safety training to all his workmen, the contractor can
Be debarred from getting tender documents in SCCL for two years from the date of last accident.

e) The safety performance will also be one of the overriding criteria for evaluation of overall performance of the contractors by SCCL. The contractor shall submit the accident data including fatal / non-fatal accidents for the last 3 years where he has undertaken the construction activities Projects-wise along with the tender documents. This will also be considered for evolution of tender documents. If the information given by the contractor found incorrect, his contract will be liable to be terminated.
Royalty certificates to be supplied by the contractor.

GENERAL CONDITIONS

OF

CONTRACT

2019

ಭಾರತ್ ಹೆವಿ ಎಲೆಕ್ಟ್ರಿಕಲ್ಸ್ ಲಿಮಿಟೆಡ್, ವಿದ್ಯುನ್ಮಾನ ವಿಭಾಗ, ಬೆಂಗಳೂರು

भारत हेवी इलेक्ट्रिकल्स लिमिटेड, इलेक्ट्रानिक्स डिवीज़न, बेंगलुरु

Bharat Heavy Electricals Limited, Electronics Division, Bengaluru

CONTENTS

Chapter-1

1. General Instructions to Tenderers

1.1. Dispatch Instructions

1.2. Submission of Tenders

1.3. Language

1.4. Price Discrepancy

1.5. Evaluation of Bids

1.6. Data to be enclosed

1.7. Authorisation and Attestation

1.8. Earnest Money Deposit

1.9. Security Deposit

1.10. Return of Security Deposit

1.11. Bank Guarantee

1.12. Validity of offer

1.13. Execution of Contract Agreement

1.14. Rejection of Tender and other Conditions

1.15 BHEL Fraud Prevention Policy

2. Chapter-2

2.1. Definitions

2.2. Law Governing Contract and Court Jurisdiction

2.3. Issue of Notice

2.4. Use of land

2.5. Commencement of Work

2.6. Measurement of Work and Mode of Payment

2.7. Rights of BHEL

2.8. Responsibilities of Contractor in respect of Local Laws, Employment of Workers etc

2.9. Progress Monitoring, Monthly Review and Performance Evaluation

2.10. Time of Completion

2.11. Extension of Time for Completion

2.12. Over Run Compensation

2.13. Quantity Variation

2.14. Extra Works

2.15. Supplementary Items

2.16. Strikes & Lockout

2.17. Force Majeure

2.18. Arbitration and Reconciliation

2.19. Payments

2.20. Performance Guarantee for Workmanship

2.21. Closing of Contracts

2.22. Reverse Auction

2.23. Suspension of Business Dealings

2.24. Other Issues

CHAPTER -1

1. GENERAL INSTRUCTION TO TENDERERS

1.1. DESPATCH INSTRUCTION

i) The General Conditions of Contract form part of the Tender specifications. All pages of the tender documents shall be duly signed, stamped and submitted along with the offer in token of complete acceptance thereof. The information furnished shall be complete by itself. The tenderer is required to furnish all the details and other documents as required in the following pages

ii) Tenderers are advised to study all the tender documents carefully. Any submission of tender by the tenderer shall be deemed to have been done after careful study and examination of the tender documents and with the full understanding of the implications thereof. Should the tenderers have any doubt about the meaning of any portion of the Tender Specification or find discrepancies or omissions in the drawings or the tender documents issued are incomplete or shall require clarification on any aspects, the scope of work etc., he shall contact the authority inviting the tender well in time (so as not to affect last date of submission) for clarification before the submission of the tender. Tenderer's request for clarifications shall be with reference to Sections and Clause numbers given in the tender documents. The tender specifications and terms and conditions shall be deemed to have been accepted by the tenderer in the offer. Pre requirements and conditions shall be liable for rejection.

iii) Integrity pact (IP): If NIT calls for Integrity Pact, the same shall be duly signed & stamped by the authorised signatory & submitted along with tender document.

1.2. SUBMISSION OF TENDERS

1.2.1 The tenderers must submit their tenders as per instructions in the NIT

1.2.2 BHEL takes no responsibility for delay, loss or non-receipt of tenders sent by post/courier. The tenders received after the specified time of their submission are treated as 'Late Tenders' and shall not be considered under any circumstances. Offers received by Fax/Email/Internet shall be considered as per terms of NIT.

1.2.3 Tenders shall be opened by authorised Officer of BHEL at his office at the time and date as specified in the NIT, in the presence of such of those tenderers or their authorised representatives who may be present

1.2.4 Tenderers whose bids are found techno commercially qualified shall be informed the date and time of opening of the Price Bids and such Tenderers may depute their representatives to witness the opening of the price bids. BHEL's decision in this regard shall be final and binding.

1.2.5 Before submission of Offer, the tenderers are advised to inspect the site of work and the environments and be well acquainted with the actual working and other prevalent conditions, facilities available, position of material and labour, means of transport and access to Site, accommodation, etc. No claim will be entertained later on the grounds of lack of knowledge of any of these conditions.

1.3. ***LANGUAGE***

1.3.1 The tenderer shall quote the rates in English language and international numerals. These rates shall be entered in figures as well as in words. For the purpose of the tenders, the metric system of units shall be used.

1.3.2 All entries in the tender shall either be typed or written legibly in ink. Erasing and over-writing is not permitted and may render such tenders liable for rejection. All cancellations and insertions shall be duly attested by the tenderer.

1.4 ***PRICE DISCREPANCY:***

1.4.1 Conventional (Manual) Price Bid opening:

i) If, in the price structure quoted for the required goods/services/works, there is discrepancy between the unit price and the total price (which is obtained by multiplying the unit price by the quantity), the unit price shall prevail and the total price corrected accordingly, unless in the opinion of BHEL there is obvious misplacement of decimal point in the unit price, in which case the total price as quoted shall govern and the unit price corrected accordingly

ii) If there is an error in a total corresponding to the addition or subtraction of subtotals, the subtotals shall prevail and the total shall be corrected;

iii) If there is a discrepancy between words and figures, the amount in words shall prevail, unless the amount expressed in words is related to an arithmetic error, in which case the amount in figures shall prevail subject of (i) and (ii) above.

iv) If there is such discrepancy in an offer, the same shall be conveyed to the bidder with target date up to which the bidder has to send his acceptance on the above lines and if the bidder does not agree to the decision of BHEL, the bid is liable to be ignored.

v) In case of lump sum price, if there is any difference between the amount in figures and in words, the amount quoted by the bidder in words shall be taken as correct.

vi) In case of omission in quoting any rate for one or more items, the evaluation shall be done considering the highest quoted rate obtained against the respective items by other tenderers for the subject tender. If the tenderer becomes L-1, the notional rates for the omission items shall be the lowest rates quoted for the respective items by the other tenderers against the respective omission items for the subject job and the 'Total quoted price (loaded for omissions)' shall be arrived at. However the overall price remaining the same as quoted originally, the rates for all the items in the 'Total quoted price (loaded for omissions)' shall be reduced item wise in proportion to the ratio of 'Original' total price and the 'Total quoted price (loaded for omissions)".

1.4.2 Reverse Auction: In case of Reverse Auction, the successful bidder shall undertake to execute the work as per overall price offered by him during the Reverse Auction process. In case of omission of rates, the procedure shall be as per 'Guidelines for Reverse Auction' enclosed.
i) Offers from tenderers who are under suspension (banned) by any Unit/Region/Division of BHEL shall not be considered.
ii) Offers from tenderers who do not comply with the latest guidelines of Ministry/ Commissions of Govt of India shall not be considered.

1.5. ***EVALUATION OF BIDS***

i) Technical Bids submitted by the tenderer will be opened first and evaluated for fulfilling the Pre-Qualification criteria and other conditions in NIT/Tender documents, based on documentary evidences submitted along with the offer, BHEL reserves the right to ask for proofs/documents, clarification in relation to Technical/commercial data during tender evaluation

ii) Price Bids of shortlisted bidders shall only be opened either through the conventional price bid opening or through electronic Reverse Auction, at the discretion of BHEL

iii) Price Bids of unqualified bidders shall not be opened. Reasons for rejection shall be intimated to the vendor before the opening of Price bid.

1.6. ***DATA TO BE ENCLOSED***

The following information in full shall be furnished by the tenderer. Non-submission of this information may lead to rejection of the offer.

i) INCOME TAX PERMANENT ACCOUNT NUMBER, GSTIN, SAC, HSN Certified copies of PAN, GSTIN shall be furnished along with tender. The names, addresses and contact information of the Directors/Partners shall be furnished along with the offer.

ii) An attested copy of the Power of Attorney, in case the tender is signed by an individual other than the sole proprietor.

iii) IN CASE OF INDIVIDUAL TENDERER:

His / her full name, address, PAN, GSTIN and place & nature of business to be furnished.

iv) IN CASE OF PARTNERSHIP FIRM

The names of all the partners and their addresses, a copy of the partnership deed/instrument of partnership shall be enclosed.

v) IN CASE OF COMPANIES:

Date and place of registration including date of commencement certificate in case of Public Companies (certified copies of Memorandum and articles of Association are also to be furnished). Nature of business carried on by the Company and the provisions of the Memorandum relating thereof.

*1.7. **AUTHORISATION AND ATTESTATION***

Tenders shall be signed by a person duly authorised/empowered to do so. An attested copy of the Power of Attorney, in case the tender is signed by an individual other than the sole proprietor shall be submitted along with the tenders

*1.8. **EARNEST MONEY DEPOSIT***

1.8.1 Every tender must be accompanied by the prescribed amount of Earnest Money Deposit (EMD) in the manner described herein.

The EMD may be accepted only in the following forms:
(i) Electronic Fund Transfer credited in BHEL account (before tender opening)
(ii) Banker's cheque/ Pay order/ Demand draft, in favor of BHEL (along with offer)In case total EMD amount is more than Rs 20 Lakh, the amount in excess of Rs 20 lakh maybe accepted in the form of Bank Guarantee from scheduled bank. The Bank Guarantee in such cases shall be valid for at-least six months.
(iii) Through SBI collect (before tender opening)
(iv) No other form of EMD remittance shall be acceptable to BHEL

1.8.2 EMD by the bidder will be forfeited as per Tender Documents if

i) After opening the tender and within the offer validity period, the tenderer revokes his/her tender or makes any modification in his tender which is not acceptable to BHEL.
ii) The Contractor fails to deposit the required Security deposit or commence the work within the period as per LOI/ Contract.
iii) EMD by the tenderer shall be withheld in case any action on the tenderer is envisaged in derailing the tender process by unlawful means

1.8.3 EMD shall not carry any interest.

1.8.4 In the case of unsuccessful bidders, the Earnest Money will be refunded to them within a reasonable time after acceptance of award by successful tenderer.

1.8.5 EMD of successful tenderer will be converted as part of Security Deposit

*1.9. **SECURITY DEPOSIT***

The total amount of Security Deposit will be 5% of the contract value (including all applicable taxes) EMD of the successful tenderer shall be converted and adjusted towards the required amount of Security Deposit.

1.9.1 Modes of Security deposit:

The balance amount to make up the required Security Deposit of 5% of the contract value may be accepted in the following forms:
i) Cash (as permissible under the extant Income Tax Act)
ii) Local cheques of Scheduled Banks (subject to realization)/ Pay Order/ Demand Draft/ Electronic Fund Transfer in favour of BHEL
iii) Bank Guarantee from Scheduled Banks/ Public Financial Institutions as defined in the Companies Act. The Bank Guarantee format should have the approval of BHEL
iv) Fixed Deposit Receipt issued by Scheduled Banks/ Public Financial Institutions as defined in the Companies Act (FDR should be in the name of the Contractor, a/c BHEL)
v) Securities available from Indian Post offices such as National Savings Certificates, Kisan Vikas Patras etc. (held in the name of Contractor furnishing the security and duly endorsed/ hypothecated/ pledged, as applicable, in favour of BHEL) (Note: BHEL will not be liable or responsible in any manner for the collection of interest or renewal of the documents or in any other matter connected therewith)
vi) 50% of the required Security Deposit, including the EMD, should be paid before start of the work. Balance of the Security Deposit can be collected by deducting10% of the gross amount progressively from each of the running bills of the Contractor till the total amount of the required Security Deposit is collected. If the value of work done at any time exceeds the contract value, the amount of Security Deposit shall be correspondingly enhanced and the additional Security Deposit shall be immediately deposited by the Contractor or recovered from payment/s due to the Contractor. Security Deposit shall be released to the Contractor upon fulfilment of contractual obligations as per terms of the contract.

1.9.2 The Security Deposit shall not carry any interest.

1.9.3 The validity of Bank Guarantees towards Security Deposit shall be initially up to the completion period as stipulated in the Letter of Intent/Award (plus maintenance period if applicable), and 03 months claim period. The same shall be kept valid by proper renewal till the acceptance of Final Bills of the Contractor, by BHEL

1.9.4 BHEL reserves the right of forfeiture of Security Deposit in addition to other claims and penalties in the event of the Contractor's failure to fulfill any of the contractual obligations or in the event of termination of contract as per terms and conditions of contract. BHEL reserves the right to set off the Security Deposit against any claims of other contracts with BHEL.

1.10. ***REFUND OF SECURITY DEPOSIT***

50% of the security deposit may be refunded on completion of the work after payment of the final bill and the balance 50% of the security deposit is refunded only after the expiry of the maintenance period from date of completion of work as stipulated in the contract concerned.

1.10.1 *DEFECTS LIABILITY PERIOD:*

The contractor shall be responsible to make good and remedy at his own expenses within such period as may be stipulated by the Engineer-in-charge, any defect which may develop or may be noticed before the expiry of the maintenance period of six months or as stipulated in NIT hereto from the certified date of completion and intimation of which has been sent to the contractor within seven days of the expiry of the said period by a letter sent by hand delivery or by registered post or Email. If contractor fails to attend to the above, defect will be rectified at contractor's risk & cost and same will be deducted from the security deposit/payable amounts available with BHEL.

1.11. ***BANK GUARANTEES***

Where ever Bank Guarantees are to be furnished/submitted by the contractor, the following shall be complied with

i) Bank Guarantees shall be from Scheduled Banks / Public Financial Institutions as defined in the Companies Act.

ii) The Bank Guarantees shall be as per prescribed BHEL formats.

iii) It is the responsibility of the bidder to get the Bank Guarantees revalidated/extended for the required period (subject to a minimum period of six months), as per the advice of BHEL. BHEL shall not be liable for issue of any reminders regarding expiry of the Bank Guarantees.

iv) In case extension/further extensions of any Bank Guarantees are not required, the bidders shall ensure that the same is explicitly endorsed by BHEL

v) In case the Bank Guarantees are not extended before the expiry date, BHEL reserves the right to invoke the same by informing the concerned Bank in writing, without any advance notice/communication to the concerned bidder.

vi) Bidders to note that any corrections to Bank Guarantees shall be done by the issuing Bank, only through an amendment in an appropriate non judicial stamp paper.

vii) The Original Bank Guarantee shall be sent directly by the Bank to BHEL under Registered Post (Acknowledgement Due).

*1.12. **VALIDITY OF OFFER***

The rates in the Tender shall be kept open for acceptance for a minimum period of Ninety (90) DAYS from latest due date of offer submission (including extension, if any). In case BHEL calls for negotiations, such negotiations shall not amount to cancellation or withdrawal of the original offer which shall be binding on the tenderers.

*1.13 **EXECUTION OF CONTRACT AGREEMENT***

The successful tenderer's responsibility under this contract commences from the date of issue of the Letter of Intent by BHEL. The Tenderer shall submit an unqualified acceptance to the Letter of Intent/Award within the period stipulated therein.

The successful tenderer shall be required to execute an agreement in the prescribed form, with BHEL, within fifteen days (15 days) after the acceptance of the Letter of Intent/Award, and in any case before releasing the first running bill. The contract agreement shall be signed by a person duly authorized/empowered by the tenderer. The expenses for preparation of agreement document shall be borne by Tenderer.

*1.14. **REJECTION OF TENDER AND OTHER CONDITIONS***

1.14.1 The acceptance of tender will rest with BHEL which does not bind itself to accept the lowest tender or any tender and reserves to itself full rights for the following without assigning any reasons whatsoever:-

a. To reject any or all of the tenders.

b. To split up the work amongst two or more tenderers as per NIT

c. To award the work in part if specified in NIT

d. In case of either of the contingencies stated in (b) and (c) above, the time for completion as stipulated in the tender shall be applicable.

1.14.2 Conditional tenders, unsolicited tenders, tenders which are incomplete or not in the form specified or defective or have been materially altered or not in accordance with the tender conditions, specifications etc., are liable to be rejected.

1.14.3 Tenders are liable to be rejected in case of unsatisfactory performance of the tenderer with BHEL, or tenderer under suspension (hold/banning /delisted) by any unit / region / division of BHEL or tenderers who do not comply with the latest guidelines of Ministry/Commissions of Govt of India. BHEL reserves the right to reject a bidder in case it is observed that they are overloaded and may not be in a position to execute this job. The decision of BHEL will be final in this regard.

1.14.4 If a tenderer who is a proprietor expires after the submission of his tender or after the acceptance of his tender, BHEL may at their discretion, cancel such tender. If a partner of a firm expires after the submission of tender or after the acceptance of the tender, BHEL may then cancel such tender at their discretion, unless the firm retains its character.

1.14.5 BHEL will not be bound by any Power of Attorney granted by changes in the composition of the firm made subsequent to the execution of the contract. They may, however, recognize such power of Attorney and changes after obtaining proper legal advice, the cost of which will be chargeable to the contractor concerned.

1.14.6 If the tenderer deliberately gives wrong information in his tender, BHEL reserves the right to reject such tender at any stage or to cancel the contract if awarded and forfeit the Earnest Money/Security Deposit/any other money due.

1.14.7 Canvassing in any form in connection with the tenders submitted by the Tenderer shall make his offer liable to rejection.

1.14.8 In case the Proprietor, Partner or Director of the Company/Firm submitting the Tender, has any relative or relation employed in BHEL, the authority inviting the Tender shall be informed, along with the Offer. Failing to do so, BHEL may, at its sole discretion, reject the tender or cancel the contract and forfeit the Earnest Money/Security Deposit.

1.14.9 The successful tenderer should not sub-contract part or complete work detailed in the tender specification undertaken by him without written permission of BHEL's Construction Manager/Site Incharge. The tenderer is solely responsible to BHEL for the work awarded to him.

1.14.10 The Tender submitted by a techno commercially qualified tenderer shall become the property of BHEL who shall be under no obligation to return the same to the bidder. However unopened price bids and late tenders shall be returned to the bidders after finalization of contract.

1.14.11 Unsolicited discount received after the due date and time of Bid Submission shall not be considered for evaluation. However, if the party who has submitted the unsolicited discount/rebate becomes the L-I party, then the awarded price i.e contract value shall be worked out after considering the discount so offered.

1.14.12 BHEL shall not be liable for any expenses incurred by the bidder in the preparation of the tender irrespective of whether the tender is accepted or not.

1.15 ***BHEL Fraud Prevention Policy :***

The bidder along with its associate/ collaborators/sub-contractors/ Sub-Vendors/ Consultants/service providers shall strictly adhere to BHEL Fraud Prevention Policy displayed on BHEL website http://www.bhel.com and shall immediately bring to the notice of BHEL Management about any fraud or suspected fraud as soon as it comes to their notice. Fraud prevention policy and list of Nodal officers shall be hosted on BHEL website, vendor portals of Units/Regions Internet.

CHAPTER-2

2.1 DEFINITION: The following terms shall have the meaning hereby assigned to them except where the context otherwise requires

i) BHEL shall mean Bharat Heavy Electricals Limited, a company registered under Companies Act 1956, with its Registered Office at BHEL HOUSE, SIRI FORT, NEW DELHI – 110 049, or its Authorised Officers or its Site Engineers or other employees authorised to deal with any matters with which these persons are concerned on its behalf.

ii) "EXECUTIVE DIRECTOR" or 'GROUP GENERAL MANAGER' or "GENERAL MANAGER (Incharge)" or "GENERAL MANAGER" shall mean the Officer in Electronics Division, Mysore road, Bengaluru-560026

iii) "COMPETENT AUTHORITY" shall mean Executive Director or Group General Manager or General Manager (In-charge) or General Manager or BHEL Officers who are empowered to act on behalf of the Executive Director or General Manager (In-charge) or General Manager of BHEL.

iv) "ENGINEER" or "ENGINEER IN CHARGE" shall mean an Officer of BHEL as may be duly appointed and authorized by BHEL to act as "Engineer" on his behalf for the purpose of the Contract, to perform the duty set forth in this General Conditions of Contract and other Contract documents. The term also includes 'CONSTRUCTION MANAGER' or 'SITE INCHARGE' as well as Officers

v) "SITE" shall mean the places or place at which the plants/equipment are to be erected and services are to be performed as per the specification of this Tender.

vi) "CLIENT OF BHEL" or "CUSTOMER" shall mean the project authorities with whom BHEL has entered into a contract for supply of equipment or provision of services.

vii) "CONTRACTOR" shall mean the successful Bidder/Tenderer who is awarded the Contract and shall include the Contractor's successors, heirs, executors, administrators and permitted assigns.

viii) "CONTRACT" or "CONTRACT DOCUMENT" shall mean and include the Work Order, Contract Agreement, the accepted appendices of Rates, Schedules, Quantities if any, General Conditions of Contract, Special Conditions of Contract, Instructions to the Tenderers, Drawings, Technical Specifications, the Special Specifications if any, the Tender documents, subsequent amendments mutually agreed upon and the Letter of Intent/Acceptance issued by BHEL. Any conditions or terms stipulated by the contractor in the tender documents or subsequent letters shall not form part of the contract unless, specifically accepted in writing by BHEL in the Letter of Intent/Award and incorporated in the agreement.

ix) "GENERAL CONDITIONS OF CONTRACT" shall mean the 'Instructions to Tenderers' and 'General Conditions of Contract' pertaining to the work for which above tenders have been called for.

x) "TENDER SPECIFICATION" or "TENDER" or "TENDER DOCUMENTS" shall mean General Conditions, Common Conditions, Special Conditions, Price Bid, Rate Schedule, Technical Specifications, Appendices, Annexures, Corrigendum's, Amendments, Forms, procedures, Site information, etc and drawings/documents pertaining to the work for which the tenderers are required to submit their offers. Individual specification number will be assigned to each Tender Specification.

xi) "LETTER OF INTENT" shall mean the intimation by a Post/Fax/email to the tenderer that the tender has been accepted in accordance with provisions contained in the letter. The responsibility of the contractor commences from the date of issue of this letter and all terms and conditions of the contract are applicable from this date.

xii) "COMPLETION TIME" shall mean the period by 'date/month' specified in the 'Letter of Intent/Award' or date mutually agreed upon for handing over of the intended scope of work, the erected equipment/plant which are found acceptable by the Engineer, being of required standard and conforming to the specifications of the Contract.

xiii) "PLANT" shall mean and connote the entire assembly of the plant and equipment's covered by the contract.

xiv) "EQUIPMENT" shall mean equipment, machineries, materials, structural, electrical and other components of the plant covered by the contract.

xv) "TESTS" shall mean and include such test or tests to be carried out on the part of the contractor as are prescribed in the contract or considered necessary by BHEL, in order to ascertain the quality, workmanship, performance and efficiency of the contractor or part thereof.

xvi) "APPROVED", "DIRECTED" or "INSTRUCTED" shall mean approved, directed or instructed by BHEL.

xvii) "WORK or CONTRACT WORK" shall mean and include supply of all categories of labour, specified consumables, tools and tackles and Plants required for complete and satisfactory site transportation, handling, stacking, storing, erecting, testing and commissioning of the equipment's to the entire satisfaction of BHEL.

xviii) "SINGULAR AND PLURALS ETC" words carrying singular number shall also include plural and vice versa, where the context so requires. Words imparting the masculine Gender shall be taken to include the feminine Gender and words imparting persons shall include any Company or Associations or Body of Individuals, whether incorporated or not.

xix) "HEADING" – The heading in these General Conditions are solely for the purpose of facilitating reference and shall not be deemed to be part thereof or be taken as instructions thereof or of the contract.

xx) "MONTH" shall mean calendar month unless otherwise specified in the Tender.

xxi) Day' or 'Days' unless herein otherwise expressly defined shall mean calendar day or days of twenty four (24) hours each. A week shall mean continuous period of seven (7) days.

xxii) "COMMISSIONING" shall mean the synchronization testing and achieving functional operation of the Equipment with associated system after all initial adjustments, trials, cleaning, re-assembly required at site if any, have been completed and Equipment with associated system is ready for taking into service.

xxiii) "WRITING" shall include any manuscript type written or hand written or printed statement or electronically transmitted messages, under the signature or seal or transmittal of BHEL.

xxiv) "TEMPORARY WORK" shall mean all temporary works for every kind required in or for the execution, completion, maintenance of the work.

xxv) 'CONTRACT PRICE' or 'CONTRACT VALUE' shall mean the sum including applicable taxes mentioned in the LOI/LOA/Contract Agreement subject to such additions thereto or deductions there from as may be made under provisions hereinafter contained

xxvi) "COMMENCEMENT DATE" or "START DATE" shall mean the commencement/start of work at Site as per terms defined in the Tender

xxvii) "SHORT CLOSING" or "FORE CLOSING" of Contract shall mean the premature closing of Contract, for reasons not attributable to the contractor and mutually agreed between BHEL and the contractor

xxviii) "TERMINATION" of Contract shall mean the pre mature closing of contract due to reasons as mentioned in the contract

2.2 LAW GOVERNING THE CONTRACT AND COURT JURISDICTION

The contract shall be governed by the Law for the time being in force in the Republic of India. The Civil Court having original Civil Jurisdiction at Bengaluru, shall alone have exclusive jurisdiction in regard to all claims in respect of the Contract. No other Civil Court shall have jurisdiction in case of any dispute, under this contract

2.3 ISSUE OF NOTICE

2.3.1 Service of notice on contractor: Any notice to be given to the Contractor under the terms of the contract shall be served by sending the same by Registered Post / Speed Post / FAX / Email to or leaving the same at the Contractor's last known address of the principal place of business (or in the event of the contractor being a company, to or at its Registered Office). In case of change of address, the notice shall be served at changed address as notified in writing by the Contractor to BHEL. Such posting or leaving of the notice shall be deemed to be good service of such notice and the time mentioned to the condition for doing any act after notice shall be reckoned from the date so mentioned in such notice.

2.3.2 Service of notice on BHEL Any notice to be given to BHEL in-charge under the terms of the Contract shall be served by sending the same by post or Email or leaving the same at BHEL address or changed address as notified in writing by BHEL to the Contractor.

2.4 USE OF LAND

No land belonging to BHEL or their Customer under temporary possession of BHEL shall be occupied by the contractor without written permission of BHEL.

2.4.1 STORES AND MATERIALS:

The contractor shall, at his own expense, supply all stores and materials required for the contract, other than those which may be provided by BHEL at the rates detailed therein subject to their availability at the place of issue indicated therein. All stores and materials to be supplied by the Contractor shall be of the best kind as described in the Specifications and the Contractor shall, if required by the Engineer –in- charge furnish him with proof to his satisfaction that the store and materials so comply with the specifications.

The contractor shall, at his own expense and without delay, supply samples of stores and materials proposed to be used in the execution of the work for the approval of the Engineer-in charge, who may reject all stores and materials not corresponding either in quality or character to the approved samples.

In the case of stores provided by BHEL, the Contractor shall bear the cost of loading, transporting to site, unloading, storing under cover as required, assembling & jointing the several parts together as necessary and incorporating & fixing these stores & materials in the work, including all preparatory work of whatever description that may be required, and closing, preparing, loading and returning empty cases or containers to the place of issue without any extra charges.
Contractor is responsible for safe & secure storage of above material.

2.4.2 PATENT RIGHTS:

The contractor shall fully indemnify BHEL, or the agent, servant, or employee of BHEL, against any action, claim or proceeding relating to infringement or the use of any patent or design or any alleged patent or design rights, and shall pay any royalties which may be payable in respect of any article/ or part thereof included in the contract.

In the event of any claims being made or action brought against BHEL, or any agent, or servant or employee of BHEL., in respect of any of the matters aforesaid, the contractor shall not apply when such increment has taken place in complying with the specific directions issued by the BHEL but the contractor shall pay any royalties payable in respect of any such use.

2.4.3 WATER :

The contractor shall allow in his tender and provide at his cost all water required for the work or his employees on the work, together with all pipes and fittings or other means that may be necessary or required to ensure a proper and ample supply of water for all purpose connected with the work.

In the event of a provision existing in the Tender documents for supply of water on payment by BHEL, water will be supplied from the BHEL supply System, or other sources at any points fixed by the Site Engineer/ Engineer-in-charge on the site of work. The contractor shall make necessary arrangement for lifting, pumping, carrying or conveying the water as required at his own cost. The levy of water charges to be borne by the Contractor in such case shall be specifically mentioned in the Tender documents.

2.4.4 TEMPORARY WORKSHOPS, STORES ETC :

The Contractor shall, during the progress of the work provide, erect and maintain at his own expense all necessary temporary workshops, store, offices, toilets etc., required for the proper and efficient execution of the work. The planning, siting and erection of these building shall have the approval of the Engineer-in-charge and the Contractor shall at all times keep them in a clean and sanitized condition to the entire satisfaction of the Engineer-in-charge.

On completion of the work all such temporary buildings shall be cleared and the site restored to its original state in a clean and tidy condition to the entire satisfaction of the Engineer-in-charge.

2.5 COMMENCEMENT OF WORK

2.5.1 Time is essence of contract and is specified in the tender document or in each individual work order.

2.5.2 The contractor shall commence the work within seven(07) days from LOI/work order or as intimated by BHEL and shall proceed with the same with due expedition without delay.

2.5.3 If the contractor fails to start the work within stipulated time as per LOI or as intimated by BHEL, then BHEL at its sole discretion will have the right to cancel the contract. The Earnest Money and/or Security Deposit with BHEL will stand forfeited without any further reference to him without prejudice to any and all of BHEL's other rights and remedies in this regard.

2.5.4 All the work shall be carried out under the direction and to the satisfaction of BHEL.

2.6 ***MEASUREMENT OF WORK AND MODE OF PAYMENT:***

2.6.1 All payments due to the contractors shall be made by electronic mode only, unless otherwise found operationally difficult.

2.6.2 For progress running bill payments: - The Contractor shall present detailed measurement sheets in triplicate, duly indicating all relevant details based on technical documents and connected drawings for work done during the month/period under various categories in line with terms of payment as per contract. The basis of arriving at the quantities, weights shall be relevant documents and drawings released by BHEL. These measurement sheets shall be prepared jointly with BHEL Engineers and signed by both the parties.

2.6.3 These measurement sheets will be checked by BHEL Engineer and quantities and percentage eligible for payment under various groups shall be decided by BHEL Engineer. The abstract of quantities and percentage so arrived at based on the terms of payment shall be entered in Measurement Book and signed by both the parties.

2.6.4 Based on the above quantities, contractor shall prepare the bills in prescribed format and work out the financial value. These will be entered in Measurement Book and signed by both the parties. Payment shall be made by BHEL after effecting the recoveries due from the contractor.

2.6.5 All recoveries due from the contractor for the month/period shall be effected in full from the corresponding running bills unless specific approval from the competent authorities is obtained to the contrary.

2.6.6 Measurement shall be restricted to that portion of work for which it is required to ascertain the financial liability of BHEL under this contract.

2.6.7 The measurement shall be taken jointly by persons duly authorized on the part of BHEL and by the Contractor.

2.6.8 The Contractor shall bear the expenditure involved if any, in making the measurements and testing of materials to be used/used in the work. The contractor shall, without extra charges, provide all the assistance with appliances and other things necessary for measurement.

2.6.9 If at any time due to any reason whatsoever, it becomes necessary to re-measure the work done in full or in part, the expenses towards such re measurements shall be borne by the contractor unless such re measurements are warranted solely for reasons not attributable to contractor.

2.6.10 Passing of bills covered by such measurements does not amount to acceptance of the completion of the work measured. Any left out work has to be completed, if pointed out at a later date by BHEL.

2.6.11 Final measurement bill shall be prepared in the final bill format prescribed for the purpose based on the certificate issued by BHEL Engineer that entire works as stipulated in tender specification has been completed in all respects to the entire satisfaction of BHEL. Contractor shall give unqualified "No Claim" Certificate. All the tools and tackles loaned to him should be returned in satisfactory condition to BHEL. The abstract of final quantities and financial values shall also be entered in the Measurement Books and signed by both parties to the contract. The Final Bill shall be prepared and paid within a reasonable time after completion of work.

2.7 ***RIGHTS OF BHEL***

BHEL reserves the following rights in respect of this contract during the original contract period or its extensions if any, as per the provisions of the contract, without entitling the contractor for any compensation.

2.7.1 To withdraw any portion of work and/or to restrict/alter quantum of work as indicated in the contract during the progress of work and get it done through other agencies to suit BHEL's commitment to its customer or in case BHEL decides to advance the date of completion due to other emergent reasons/ BHEL's obligation to its customer.

2.7.2 To terminate the contract or get any part of the work done through other agency or deploy BHEL's own/hired/otherwise arranged resources , at the risk and cost of the contractor after due notice of a period of two weeks by BHEL, in the event of:-

i) Contractor's continued poor progress

ii) Withdrawal from or abandonment of the work before completion of the work

iii) Contractor's inability to progress the work for completion as stipulated in the contract

iv) Poor quality of work

v) Corrupt act of Contractor

vi) Insolvency of the Contractor

vii) Persistent disregard to the instructions of BHEL

viii) Assignment, transfer, sub-letting of contract without BHEL's written permission

ix) Non fulfillment of any contractual obligations / non-compliance of statutory requirements

x) In the opinion of BHEL, the contractor is overloaded and is not in a position to execute the job as per required schedule

2.7.3 To meet the expenses including BHEL overheads of 35% & Liquidated damage/penalties arising out of "Risk & Cost" as explained above under Sl.No. 2.7.2. BHEL shall recover the amount from any money due from Contractor, from any money due to the Contractor including Security Deposit or by forfeiting any T&P or material of the contractor under this contract or any other contract of BHEL or by any other means or any combination thereof

2.7.4 To terminate the contract or to restrict the quantum of work and pay for the portion of work executed in case BHEL's contract with their customer are terminated for any reason, as per mutual agreement.

2.7.5 To effect recovery from any amounts due to the contractor under this or any other contract or in any other form, the moneys BHEL is statutorily forced to pay to anybody, due to contractor's failure to fulfill any of his obligations. BHEL shall levy overheads of 35% on all such payments.

2.7.6 While every endeavor will be made by BHEL to this end, they cannot guarantee uninterrupted work due to conditions beyond their control. The Contractor will not be normally entitled for any compensation/extra payment on this account unless otherwise specified elsewhere in the contract.

2.7.7 In case the execution of works comes to a complete halt or reaches a stage wherein worthwhile works cannot be executed and there is no possibility of commencement of work for a period of not less than two months, due to reasons not attributable to the contractor and other than Force Majeure conditions, BHEL may consider permitting the contractor to de mobilize forthwith and re mobilize at an agreed future date. Cost of such demobilization/remobilization shall be mutually agreed. ORC (Over run Charges) in such cases shall not be applicable for the period between the period of demobilization and re mobilisation. The duration of contract/time extension shall accordingly get modified suitably. In case of any conflict, BHEL decision in this regard shall be final and binding on the contractor.

2.7.8 In the unforeseen event of inordinate delay in receipt of materials, drawings, fronts, etc, due to which inordinate discontinuity of work is anticipated, BHEL at its discretion may consider contractor's request to short close the contract, provided that the balance works are minor vis a vis the scope of work envisaged as per the contract. At the point of requesting for

short closure, contractor shall establish that he has completed all works possible of completion and he is not able to proceed with the balance works due to constraints beyond his control. In such a case, the estimated value of the unexecuted portion of work as mutually agreed, shall however be reduced from the final contract value.

2.7.9 ***LIQUIDATED DAMAGES/PENALTY***

COMPENSATION FOR DELAY:

If the contractor fails to maintain the required progress in terms of condition 2.10 or to complete the work and clear the site on or before the contracted or extended the period of completion, he shall, without prejudice to any other right or remedy of the BHEL on account of such breach, pay as agreed compensation an amount calculated as stipulated below

For unfinished anticipated value of work where finished portion is fit for use

Rate of compensation as follows:

- *Completion period (as originally stipulated)not exceeding 6 months. ……@ 1 percent per week*
- *Completion period (as originally stipulated) Exceeding 6 months and not exceeding 2 years…@ 0.5 percent per week*
- *Completion period (as originally stipulated) exceeding 2 years…… @ 0.25 percent per week*

Provided always that the total amount of compensation for delay to be paid under condition shall not exceed the under noted percentage of the anticipated contract value

- *Completion period (as originally stipulated) not exceeding 6 months. ……@ 10 percent of anticipated value of work*
- *Completion period (as originally stipulated)Exceeding 6 months and not exceeding 2 years…@ 7.5 percent of anticipated value of work*
- *Completion period (as originally stipulated)Exceeding 2 years……@ 5 percent of anticipated value of work*

The amount of compensation may be adjusted or set off against any sum payable to the Contractor under this or any other contract with the BHEL.

2.7.10 ***POST TECHNICAL AUDIT OF WORK AND BILLS****: BHEL reserve the right to carry out a post-payment audit and technical examination of the work and final bill including all supporting vouchers, abstract etc., and to enforce recovery of any sums becoming due as a result thereof in the manner provided in the proceeding sub-paragraph's provided however that no such recovery shall be enforced after three years of passing the final bill*

2.8 RESPONSIBILITIES OF THE CONTRACTOR IN RESPECT OF LOCAL LAWS, EMPLOYMENT OF WORKERS ETC.

The following are the responsibilities of the contractor in respect of observance of local laws, employment of personnel, payment of taxes etc. The subcontractor shall fully indemnify BHEL against any claims of whatsoever nature arising due to the failure of the contractor in discharging any of his responsibilities hereunder:

2.8.1 The contractor at all times during the continuance of this contract shall, in all his dealings with local labour for the time being employed on or in connection with the work, have due regard to all local festivals and religious and other customs.

2.8.2 The contractor shall comply with all applicable State and Central Laws, Statutory Rules, Maternity act, Regulations etc. such as contract labour(R&A) Act 1970, Minimum wage Act 19748, Payment of wages Act 1936,ESI Act 1948, EPF Act 1952, Employees' compensation Act 1923, Provision of Companies Act 1948 & rules thereof, The interstate Migrant Workmen 1979, The Karnataka Factories Rules 1969, Payment of Bonus Act 1965, Payment of Gratuity Act 1972. Child labour Prohibition act 1986, Karnataka Minimum Wage Act , Prevention of sexual harassment at work place Act 2013, Guidelines/notification related to Safai Karamchari Act , Equal Remuneration Act 1976, The company's instructions as issued from time to time in regard to working hours, wages, leaves, holidays etc. for labour as may be enacted by the Government during the tenure of the Contract and having force or jurisdiction at Site. The Contractor shall also give to the local Governing Body, Police and other relevant Authorities all such notices as may be required by the Law.

The contractor shall produce the following registers and forms:

- *Form XIII- Register of work men employed by contractor(Rule 75)*
- *Form XIV- Employment Card issued by contractor(Rule 76)*
- *Form XVI- Muster Roll (Rule 78(1) (a)(i))*
- *Form XVII- Register of Wages (Rule 78(1) (a)(i))*
- *Form XVIII- Register of wages cum Muster Roll(in case of weekly payment)*
- *Form XIX- Wage slip (Rule 78(b))*
- *Form XX- Register of deduction for damages Or Loss Rule 78(1) (a)(ii))*
- *Form XXI- Register of files Rule 78(1) (a)(ii))*
- *Form XXII- Register of Advance Rule 78(1) (a)(ii))*
- *Form XXIII- Register of Overtime Rule 78(1) (a)(iii))*
- *Form XXIV- Return to be sent by the contractor to the Licensing officer (Rule 82(1))*

2.8.3 The contractor shall obtain independent License under the Contract Labour (Regulations and Abolition Act)as required from the concerned Authorities based on the certificate (Form-V) issued by the Principal Employer/Customer

2.8.4 The contractor shall pay all taxes, fees, license charges, deposits, duties, tolls, royalties, commission or other charges which may be levied on account of his operations in executing the contract.

2.8.5 While BHEL would pay the inspection fees and Registration fees of Boiler & explosive/Electrical Inspectorate, all other arrangements for site visits periodically by the Inspectorate to site, Inspection certificate etc. will have to be made by contractor. However, BHEL will not make any payment to the Inspectorate in connection with contractor's Welders/Electricians qualification tests etc.

2.8.6 Contractor shall be responsible for provision of Health and Sanitary arrangements (more particularly described in Contract Labour Regulation & Abolition Act), Safety precautions etc. as may be required for safe and satisfactory execution of contract.

2.8.7 The contractor shall be responsible for proper accommodation including adequate medical facilities for personnel employed by him.

2.8.8 The contractor shall be responsible for the proper behavior and observance of all regulations by the staff employed by him.

2.8.9 The contractor shall ensure that no damage is caused to any person/property of other parties working at site. If any such damage is caused, it is responsibility of the contractor to make good the losses or compensate for the same.

2.8.10 All the properties/equipment/components of BHEL/their Client loaned with or without deposit to the contractor in connection with the contract shall remain properties of BHEL/their Client.

2.8.11 The contractor shall use such properties for the purpose of execution of this contract. All such properties/equipment/components shall be deemed to be in good condition when received by the contractor unless he notifies within 48 hours to the contrary. The contractor shall return them in good condition as and when required by BHEL/their Client. In case of non-return, loss, damage, repairs etc, the cost thereof as may be fixed by BHEL Engineer will be recovered from the contractor

2.8.12 Any delay in completion of works/or non-achievement of periodical targets due to the reasons attributable to the contractor, the same may have to be compensated by the contractor either by increasing manpower and resources or by working extra hours and/or by working more than one shift. All these are to be carried out by the contractor at no extra cost.

2.8.13 The contractor shall arrange, coordinate his work in such a manner as to cause no hindrance to other agencies working in the same premises.

2.8.14 All safety rules and codes applied by the Client/BHEL at site shall be observed by the contractor without exception. The contractor shall be responsible for the safety of the equipment/material and works to be performed by him and shall maintain all light, fencing guards, slings etc. or other protection necessary for the purpose. Contractor shall also take such additional precautions as may be indicated from time to time by the Engineer with a view to prevent pilferage, accidents, fire hazards. Due precautions shall be taken against fire hazards and atmospheric conditions. Suitable number of Clerical staff, watch and ward, store keepers to take care of equipment/materials and construction tools and tackles shall be posted at site by the contractor till the completion of work under this contract. The contractor shall arrange for such safety devices as are necessary for such type of work and carry out the requisite site tests of handling equipment, lifting tools, tackles etc. as per prescribed standards and practices. Contractor has to ensure the implementation of Health, Safety and Environment (HSE) requirements as per directions given by BHEL/Customer. The contractor has to assist in HSE audit by BHEL/Customer and submit compliance Report. The contractor has to generate and submit record/reports as per HSE plan/activities as per instruction of BHEL/Customer. All tools, plant and equipment brought to the site shall become the property of BHEL and shall not be removed from the site without the prior written approval from BHEL. When the work is finally completed or the Contractor is determined for reasons other than the defaults of the contract, he shall forthwith remove from the site all tools, plants, equipment etc., (other than those as may have been provided by BHEL) and upon such removal, the same shall revert in, and become the property of the contractor.

2.8.15 The contractor will be directly responsible for payment of wages to his workmen on specified date of respective month declared as per applicable Labour Act. A pay roll sheet giving all the payments given to the workers and duly signed by the contractor's representative should be furnished to BHEL site for record purpose.

2.8.16 In case of any class of work for which there is no such specification as laid down in the contract, such work shall be carried out in accordance with the instructions and requirements of the Engineer.

2.8.17 Also, no idle charges will be admissible in the event of any stoppage caused in the work resulting in contractor's labour and Tools & Plants being rendered idle due to any reason at any time.

2.8.18 The contractor shall take all reasonable care to protect the materials and work till such time the plant/equipment has been taken over by BHEL or their Client whichever is earlier.

2.8.19 The contractor shall not stop the work or abandon the site for whatsoever reason of dispute, excepting force majeure conditions. All such problems/disputes shall be separately discussed and settled without affecting the progress of work. Such stoppage or abandonment shall be treated as breach of contract and dealt with accordingly

2.8.20 The contractor shall keep the area of work clean and shall remove the debris etc. while executing day-to-day work. Upon completion of work, the contractor shall remove from the vicinity of work, all scrap, packing materials, rubbish, unused and other materials and deposit them in places specified by the Engineer. The contractor will also demolish all the hutments, sheds, offices, etc. constructed and used by him and shall clean the debris. In the event of his failure to do so, the same will be arranged to be done by the Engineer and the expenses recovered from the contractor. If the work is executed in Factory premises, no hutment will be allowed.

2.8.21 The contractor shall execute the work in the most substantial and workman like manner in the stipulated time. Accuracy of work and timely execution shall be the essence of this contract. The contractor shall be responsible to ensure that the quality, assembly and workmanship conform to the dimensions and clearance given in the drawings and/ or as per the instructions of the Engineer.

2.8.22 The Contractor to note that some of BHEL's T&Ps/MMDs may not be insured. The Contractor will take necessary precautions and due care to protect the same while in his custody from any damage/ loss till the same is handed over back to BHEL. In case the damage / loss is due to carelessness/ negligence on the part of the contractor, the Contractor is liable to get them repair/ replaced immediately and in case of his failure to do so within a reasonable time, BHEL will reserve the right to recover the loss from the contractor.

2.8.23 The contractor shall provide all watchmen necessary, for the protection of the site, the work, the materials, the tools , plant, equipment and anything else lying on the site during the progress of the work. He shall solely be responsible for and shall take all reasonable and proper steps for protecting, securing , lighting and watching all places on or about the work and the site which may be dangerous to any person whom so ever.

2.8.24 SITE DRAINAGE: All water that may accumulate on the site during the process of the work, or in trenches and excavations shall be removed to the entire satisfaction of the Engineer-in-charge and at Contractors expense.

2.8.25 INSPECTION OF THE WORK: BHEL Officers concerned with the Contract shall have power at any time to inspect and examine any part of the work and the contractor shall give such facilities as may be required to given for such inspection and examination.

2.8.26 In case the contractor is required to undertake any work outside the scope of this contract, the rates payable shall be those mutually agreed upon if the item rates are not mentioned in existing contract

i. For any item of wok required to be carried out after the contract has been awarded and which is not covered by Contractors Schedule but is covered by C.P.W.D. schedule of rates the rate payable for such a fresh item will be derived from updated C.P.W.D. schedule of rates by the method of proportion as follows:

ii. Rate as per estimated updated C.P.W.D DSR and loading tender excess (plus or minus) on pro–rata basis for nearest analogous items. For other items rate as per estimated C.P.W.D DSR and loading tender excess(plus or minus)

iii. If rates are not available in C.P.W.D. DSR, deviated item rates will be derived from market rate with 15% profit and overheads.

2.9 ***PROGRESS MONITORING, MONTHLY REVIEW AND PERFORMANCE EVALUATION***

2.9.1 A detailed plan/programme for completion of the contractual scope of work as per the time schedule given in the contract shall be jointly agreed between BHEL and Contractor, before commencement of work . The above programme shall be supported by month wise deployment of resources viz Manpower, T&P, Consumables, etc. Progress will be reviewed periodically (Daily/Weekly/Monthly) vis a vis this jointly agreed programme. The Contractor shall submit periodical progress reports (Daily/Weekly/Monthly) and other reports/information including manpower, consumables, T&P mobilization etc as desired by BHEL.

2.9.2 Monthly progress review between BHEL and Contractor shall be based on the agreed programme as above, availability of inputs/fronts etc, and constraints if any, as per prescribed formats. Manpower, T&P and consumable reports as per prescribed formats shall be submitted by contractor every month. Release of RA Bills shall be contingent upon certification by BHEL Site Engineer of the availability of the above prescribed formats duly filled in and signed.

2.9.3 The burden of proof that the causes leading to any shortfall is not due to any reasons attributable to the contractor is on the contractor himself. The monthly progress review shall record shortfalls attributable to (i) Contractor, (ii) Force Majeure Conditions, and (iii) BHEL

2.10 ***TIME OF COMPLETION***

2.10.1 Time is essence of the contract. The time schedule shall be as prescribed in the Contract. The time for completion shall be reckoned from the date of commencement of work at Site as certified by BHEL Engineers

2.10.2 The entire work shall be completed by the contractor within the time schedule or within such extended periods of time as may be allowed by BHEL under clause 2.11

2.11 ***EXTENSION OF TIME FOR COMPLETION***

2.11.1 If the completion of work as detailed in the scope of work gets delayed beyond the contract period, the contractor shall request for an extension of the contract and BHEL at its discretion may extend the Contract.

2.11.2 Based on the monthly reviews jointly signed, the works balance at the end of original contract period less the backlog attributable to the contractor shall be quantified, and the number of months of 'Time extension' required for completion of the same shall be jointly worked out. Within this period of 'Time extension', the contractor is bound to complete the portion of backlog attributable to the contractor. Any further 'Time extension' or 'Time extensions' at the end of the previous extension shall be worked out similarly.

2.11.3 However if any 'Time extension' is granted to the contractor to facilitate continuation of work and completion of contract, due to backlog attributable to the contractor alone, then it shall be without prejudice to the rights of BHEL to impose penalty/LD for the delays attributable to the contractor, in addition to any other actions BHEL may wish to take at the risk and cost of contractor.

2.11.4 A joint programme shall be drawn for the balance amount of work to be completed during the period of 'Time Extension', along with matching resources (with weightages) to be deployed by the contractor as per specified format. Review of the programme and record of shortfall shall be done every month of the 'Time extension' period in the same manner as is done for the regular contract period.

2.11.5 During the period of 'Time extension', contractor shall maintain their resources as per mutually agreed program

2.11.6 At the end of total work completion as certified by BHEL Engineer, and upon analysis of the total delay, the portion of time extensions attributable to (i) Contractor, (ii) Force majeure conditions, and (iii) BHEL, shall be worked out and shall be considered to be exhausted in the same order. The total period of time extensions shall be the sum of (i), (ii) and (iii) above and shall be equal to period between the scheduled date of completion and the actual date of completion of contract. LD shall be imposed/levied for the portion of time extensions attributable to contractor and recoverable from the dues payable to the contractor.

2.12 ***OVERRUN COMPENSATION (THIS CLAUSE IS NOT APPLICABLE IN BHEL FACTORY & TOWNSHIP PREMISES)***

2.12.1 Over Run Compensation (ORC) is payable by way of rate revisions for periods beyond original, contract period subject to the following terms and conditions.

2.12.2 Rates shall be increased by 10% for the first twelve months of one or more extensions beyond original contract period. For the next twelve months of further extensions if any, rates shall be increased as above by 10% over the previous twelve months, and similarly for each subsequent twelve months extension.

2.12.3 Should there be any 'Time extension' for reasons attributable only to the contractor, then the work shall be executed by the contractor at the rates applicable for the period the work was planned

2.12.4 Payment of ORC shall be regulated as follows:

i) Contractor is entitled to Over Run Compensation (ORC) only for the portion of backlog attributable to BHEL.

ii) 50% of the compensation is allocated for deployment of resources agreed as per the joint programme drawn vide 2.11.4. Payment shall however be based on the actual deployment of resources for the month as certified by BHEL, as per weightages assigned therein

iii) 50% of the compensation, is allocated for achieving of planned progress agreed as per the joint programme drawn vide 2.11.4. Payment shall be on pro rata basis for actual achieved quantities

iv) Total Over Run Compensation shall be limited to 10% of the executed contract value as certified in Final Bill. For this purpose executed contract value excludes PVC, ORC, Supplementary/Additional Items and Extra Works done on Man-day rate basis

2.12.5 Contractor shall not be entitled for any Over Run Compensation (ORC) for the portion of backlog attributable to the contractor. Such works shall be executed at the rates applicable for the period the work was planned

2.13 ***QUANTITY VARIATION***

2.13.1 The quoted rates shall remain firm irrespective of any variations in the individual quantities.

2.14 ***EXTRA WORKS***

2.14.1 All rectifications/modifications, revamping, and reworks required for any reasons not attributable to the contractor, or needed due to any change in deviation from drawings and design of equipment, operation/maintenance requirements, mismatching, or due to damages in transit, storage and erection/commissioning, and other allied works which are not very specifically indicated in the drawings, but are found essential for satisfactory completion of the work, will be considered as extra works.

2.14.2 Extra works arising on account of the contractor's fault, irrespective of time consumed in rectification of the damage/loss, will have to be carried out by the contractor free of cost. Under such circumstances, any material and consumable required for this purpose will also have to be arranged by the contractor at his cost.

2.14.3 All the extra work should be carried out by a separately identifiable gang, without affecting routine activities. Daily log sheets in the pro-forma prescribed by BHEL should be maintained and shall be signed by the contractor's representative and BHEL engineer. No claim for extra work will be considered/entertained in the absence of the said supporting documents i.e. daily log sheets. Signing of log sheets by BHEL engineer does not necessarily mean the acceptance of such works as extra works.

2.14.4 BHEL retains the right to award or not to award any of the major repair/ rework/modification/rectification/fabrication works to the contractor, at their discretion without assigning any reason for the same

2.14.5 After eligibility of extra works is established and finally accepted by BHEL engineer/designer, payment will be released on competent authority's approval at the following rate.

MAN-HOUR RATE FOR ELIGIBLE EXTRA WORKS: Single composite average labour man-hour rate, including overtime if any, supervision, use of tools and tackles and other site expenses and incidentals, consumables for carrying out any major rework/ repairs/ rectification/ modification/ fabrication as certified by site as may arise during the course of erection, testing, commissioning or extra works arising out of transit, storage and erection damages, payment , if found due will be as per applicable minimum wage act

2.14.6 The above composite labour man hour rate towards extra works shall remain firm and not subject to any variation during execution of the work. PVC will not be applicable for extra works. Rate revision, Over Run Charges/compensation etc will not be applicable due to extra works.

2.14.7 Extra Works for Civil Packages shall be regulated as follows

i) Rates for Extra Works arising due to (1) non availability of BOQ (Rate Schedule), OR (2) change in Specifications of materials/works (3) rectification/modification/dismantling & re erecting etc due to no fault of Contractor, shall be in the order of the following:

a) Item rates are to be derived from similar nature of items in the BOQ (Rate Schedule) with applicable escalation derived from All India Consumer Price Index for Whole Sale Commodities.

b) As per applicable updated CPWD-DSR (or latest edition) with applicable escalation derived, Notification issued by the office of CPWD for 'Cost Index' in that Region where the project is being executed,

c) Item rates are to be worked out on the basis of prevailing market rates mutually agreed between BHEL and Contractor, plus 15% towards Contractor's overheads and profit.

ii) PVC and ORC will not applicable be for (i) above.

2.15 ***SUPPLEMENTARY ITEMS***

2.15.1 For NON Civil Works

Supplementary items are items/works required for completion of entire work but not specified in the scope of work. Subject to certification of such items/works as supplementary items by BHEL Engineer, rates shall be derived on the basis of any one of the following on mutual agreement:

i) Based on percentage breakup/rates indicated for similar/nearby items

ii) In case (i) above does not exist, then BHEL/site may derive the percentage breakup/rates to suit the type of work

2.15.2 For Civil Works

i) Rates for Supplementary Works/Additional Works arising out due to additions/alterations in the original scope of works as per contract subject to certification of BHEL Engineer shall be worked out as under:

a) Item rates which are available in existing BOQ (Rate Schedule) shall be operated with applicable escalation derived from All India Consumer Price Index for Whole Sale Commodities

b) Items of works which are not available in existing BOQ shall be operated as an 'Extra Works' and rate shall be derived as per clause no 2.14

ii) Execution of Supplementary Works/Additional Works through the Contractor shall be at the sole discretion of BHEL, and shall be considered as part of executed contract value for the purpose of Quantity Variation as per clause 2.13

iii) BHEL Engineer's decision regarding fixing the rate as above is final and binding on the contractor.

iv) PVC and ORC will not be applicable for (i) above.

2.16 ***STRIKES & LOCKOUT***

2.16.1 The contractor will be fully responsible for all disputes and other issues connected with his labour/employee. In the event of the contractor's labour/employee resorting to strike or the Contractor resorting to lockout and if the strike or lockout declared is not settled within a period of 15 days, BHEL shall have the right to get the work executed through any other

agencies and the cost so incurred by BHEL along with Overhead charges of 35% shall be deducted from the Contractor's bills along with overhead of 35%

2.16.2 For all purposes whatsoever, the employees of the contractor shall not be deemed to be in the employment of BHEL

2.17 FORCE MAJEURE

The following shall amount to Force Majeure:-

2.17.1 Acts of God, act of any Government, War, Sabotage, Riots, Strike, Civil commotion, Police action, Revolution, Flood, Fire, Cyclones, Earth quake and Epidemic and other similar causes over which the contractor has no control.

2.17.2 If the contractor suffers delay in the due execution of the contractual obligation due to delays caused by force majeure as defined above, the agreed time of completion of the job covered by this contract or the obligations of the contractor shall be extended by a period of time equal to period of delay, provided that on the occurrence of any such contingency, the contractor immediately reports to BHEL in writing the causes of delay and the contractor shall not be eligible for any compensation.

2.18 ***ARBITRATION & RECONCILIATION***

2.18.1 In case amicable settlement is not reached in the event of any dispute or difference arising out of the execution of the Contract or the respective rights and liabilities of the parties or in relation to interpretation of any provision by the Contractor in any manner touching upon the Contract, such dispute or difference shall (except as to any matters, the decision of which is specifically provided for therein) be referred to the sole arbitration of the arbitrator appointed by BHEL/In charge.

The award of the Arbitrator shall be binding upon the parties to the dispute Subject as aforesaid, the provisions of Arbitration and Reconciliation Act 1996 (India) or statutory modifications or reenactments thereof and the rules made there under and for the time being in force shall apply to the arbitration proceedings under this clause. The venue of the arbitration shall be the place from which the contract is issued or such other place as the Arbitrator at his discretion may determine

2.18.2 In case of Contract with Public Sector Enterprise (PSE) or a Government Department, the following shall be applicable:

In the event of any dispute or difference relating to the interpretation and application of the provisions of the Contract, such dispute or difference shall be referred to by either party to the arbitration of one of the arbitrators in the department of public enterprises. The award of the arbitrator shall be binding upon the parties to the dispute, provided, however, any party aggrieved by such award may make further reference for setting aside or revision of the award to the Law Secretary, Department of Legal Affairs, Ministry of Law and Justice, Government of India. Upon such reference the dispute shall be decided by the Law Secretary or the Special Secretary or Additional Secretary when so authorized by the Law Secretary, whose decision shall bind the parties hereto finally and conclusively.

2.18.3 The cost of arbitration shall be borne equally by the parties.

2.18.4 Work under the contract shall be continued during the arbitration proceedings

2.19 ***PAYMENTS***

Payments to Contractors are made in any one of the following forms

2.19.1 Running Account Bills (RA Bills)

i) These are for interim payments when the contracts are in progress. The bills for such interim payments are to be prepared by Contractor in prescribed formats (RA Bill forms).

ii) Payments shall be made according to the extent of work done as per measurements taken up to the end of the calendar month and in line with the terms of payments described in the Tender documents along with relevant statutory documents applicable for the work.

iii) Recoveries on account of electricity, water, statutory deductions, etc are made as per terms of contract

iv) Full rates for the work done shall be allowed only if the quantum of work has been done as per the specifications stipulated in the contract. If the work is not executed as per the stipulated specifications, BHEL may ask the contractor to re do the work according to the required specifications, without any extra cost. However, where this is not considered necessary 'OR' where the part work is done due to factors like non-availability of material to be supplied by BHEL 'OR' non availability of fronts 'OR' non availability of drawings, fraction payment against full rate, as is considered reasonable, may be allowed with due regard for the work remaining to be done. BHEL decision in this regard will be final and binding on the contractor.

v) In order to facilitate part payment, BHEL Site Engineer at his discretion may further split the contracted rates/percentages to suit site conditions, cash flow requirements according to the progress of work

2.19.2 Final Bill

Final Bill' is used for final payment on closing of Running Account for works or for single payment after completion of works. 'Final Bill' shall be submitted as per prescribed format after completion of works as per scope and upon material reconciliation, along with the following.

i) 'No Claim Certificate' by contractor

ii) Clearance certificates where ever applicable viz Clearance Certificates from Customer, various Statutory Authorities like Labour department, PF Authorities, Commercial Tax Department, etc

iii) Indemnity bond as per prescribed format BHEL shall settle the final bills after deducting all liabilities of Contractor to BHEL

2.20 ***PERFORMANCE GUARANTEE FOR WORKMANSHIP***

2.20.1 Even though the work will be carried out under the supervision of BHEL Engineers the Contractor will be responsible for the quality of the workmanship and shall guarantee the work done for a period of as mentioned in the contract/NIT from the date of commencement of guarantee period as defined in Technical Conditions of Contract, for good workmanship and shall rectify free of cost all defects due to faulty erection detected during the guarantee period. In the event of the Contractor failing to repair the defective works within the time specified by the Engineer, BHEL may proceed to undertake the repairs of such defective works at the Contractor's risk and cost, without prejudice to any other rights and recover the same from the balance security deposit.

2.20.2 BHEL shall release the balance security deposit subject to the following

i) Contractor has submitted 'Final Bill'

ii) Guarantee period as per contract has expired

iii) Contractor has furnished 'No Claim Certificate' in specified format

iv) BHEL Site Engineer/Construction Manager has furnished the 'No Demand Certificate' in specified format

v) Contractor has carried out the works required to be carried out by him during the period of Guarantee and all expenses incurred by BHEL on carrying out such works is included for adjustment from the Guarantee money refundable.

2.21 ***CLOSING OF CONTRACTS***

The Contract shall be considered completed and closed upon completion of all contractual obligations and settlement of Final Bill or completion of Guarantee period whichever is later. Upon closing of Contract, BHEL shall issue a completion certificate as per standard format, based on specific request of Contractor.

2.22 ***REVERSE AUCTION/PRICE BID OPENING:***

- *BHEL reserves the right to go for reverse auction at any point of time before opening of Price Bid.*
- *Bids with non-acceptance of reverse auction will be liable for rejection.*
- *Opening of Price Bid at discretion of BHEL.*
- *BHEL shall be at liberty to cancel the tender at any time, before ordering, without assigning any reason.*

2.23 ***SUSPENSION OF BUSINESS DEALINGS***

BHEL reserves the right to take action against Contractors who either fail to perform or Tenderers/Contractor who indulge in malpractices, by suspending business dealings with them in line with BHEL guidelines issued from time to time.

2.24 OTHER ISSUES

2.24.1 Value of Non judicial Stamp Paper for Bank Guarantees and for Contract Agreement shall be not less than Rs 200/- unless otherwise required under relevant statutes.

2.24.2 In case of any conflict between the General Conditions of Contract and Special Conditions of Contract, provisions contained in the Special Conditions of Contract shall prevail.

2.24.3 Unless otherwise specified in NIT, offers from consortium/JVs shall not be considered.

2.24.4 BHEL may not insist for signing of Contract Agreements in respect of low value and short time period contracts

FOR TENDER PURPOSE ONLY

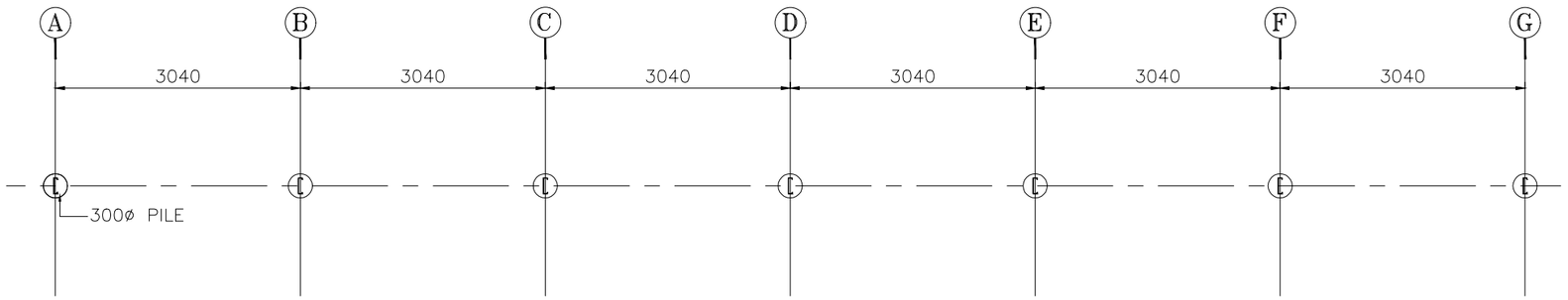

PILE FOUNDATION PLAN

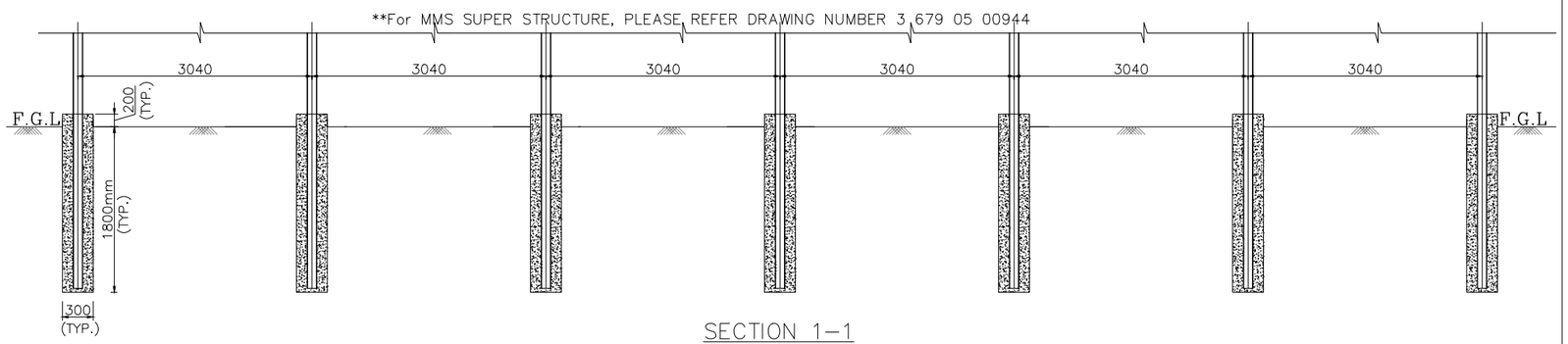

SECTION 1–1

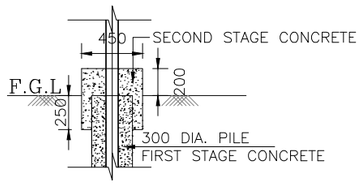

PILE CAP CASTING PLAN

NOTE: FIRST STAGE CONCRETE SHALL BE MADE ROUGH BY TOWELING AND CLEANING OUT LAITANCE AND CEMENT SLURRY BY USING WIRE BRUSH.

NOTES

1. THIS DRAWING SHALL BE READ IN CONJUNCTION WITH CONTRACT TERMS AND CONDITIONS, SPECIFICATION AND SCHEDULE OF ITEMS.
2. ALL DIMENSIONS ARE IN MILLIMETER AND LEVELS ARE IN METERS, UNO.
3. BOARD CAST–IN–SITU CONCRETE PILE CONFIRMING TO IS: 2611 (PART–1/SEC.–2) SHALL BE USED.
4. GRADE OF CONCRETE SHALL BE OF M25.
5. THE PILE LENGTH SHALL BE 1800MM BELOW NGL.
6. PILE SHALL BE CAST IN FULL LENGTH INCLUDING PROJECTION ABOVE GL. IN CASE THE CAP IS TO BE CAST IN SECOND STAGE, IT SHALL GO MIN. 250MM BELOW GL.
7. PILE CAPACITY UNDER LATERAL, UPLIFT AND COMPRESSION SHALL BE VERIFIED THROUGH FIELD TEST AS PER TEST PROGRAM.
8. TOLERANCE LIMITS FOR CASTING OF PILE SHALL BE 50MM IN BOTH DIRECTIONS.
9. GROUND SLOPE SHALL BE LIMITED TO 3 DEGREE.

LEGEND

℄	– CENTER LINE	THK	– THICKNESS
EL	– ELEVATION	TOC	– TOP OF CONCRETE
LVL	– LEVEL	TYP	– TYPICAL
GL	– GROUND LEVEL	UNO	– UNLESS NOTED OTHERWISE

REFERENCE DRAWINGS:

1. 3 679 05 00944 – GA OF MODULE MOUNTING STRUCTURE (MMS) REV. 01

SAFE PILE CAPACITY FOR 1.8M DEEP BORED CAST IN–SITU PILE (MT) (AS PER SOIL REPORT)		
COMPRESSION	LATERAL	UPLIFT
5.96	0.920	2.25

SINGARENI COLLIERIES COMPANY LIMITED
129MWp SOLAR PV PLANT FOR SCCL AT TELANGANA

OWNER'S CONSULTANT:
SOLAR ENERGY CORPORATION OF INDIA

BHARAT HEAVY ELECTRICALS LTD
ELECTRONICS DIVISION, BANGALORE

TITLE: MODULE MOUNTING STRUCTURE FOUNDATION – TYPICAL GA & DETAILS AT 10MW STPP PEGADAPALLY

SCALE 1:100

DRAWING NO. BHEL–SECI–SD–SCCL10–DWG–CIV–010

SHEET 1 OF 1 REV. 02

DEPT. SC&PV

DISTRIBUTION

REV.	DATE	ALTD	CHD	APPD	REV.	DATE	ALTD	CHD	APPD	REV.	DATE	DRWN	CHD	APPD
02	09.05.19	MN	MK	MK	01	27.04.19	MN	MK	MK	00	19.03.19	MN	SR	MK
	REVISED TO INCORPORATE SECI COMMENTS VIDE MEETING DATED 07.05.2019 TO 09.05.2019					REVISED TO INCORPORATE SECI COMMENTS DATED 30.03.2019					SIGN.	–SD–	–SD–	–SD–
											SUBMITTED FOR APPROVAL			

DRAWING NO. BHEL–SECI–SD–SCCL10–DWG–CIV–010
COPY RIGHT AND CONFIDENTIAL
The information on this document is the property of BHARAT HEAVY ELECTRICALS LIMITED
It is supplied in confidence and may not be used for any purpose except that for which it is expressly loaned.

COPYRIGHT AND CONFIDENTIAL
THE INFORMATION ON THIS DOCUMENT IS THE PROPERTY OF BHARAT HEAVY ELECTRICALS LTD. IT MUST NOT BE USED DIRECTLY OR INDIRECTLY IN ANY WAY DETRIMENTAL TO THE INTEREST OF THE COMPANY.

DRG. No. BHEL-SECI-SCCL10-DWG-CIV-012

1954x990x40 – Zhejiang Chint Electric

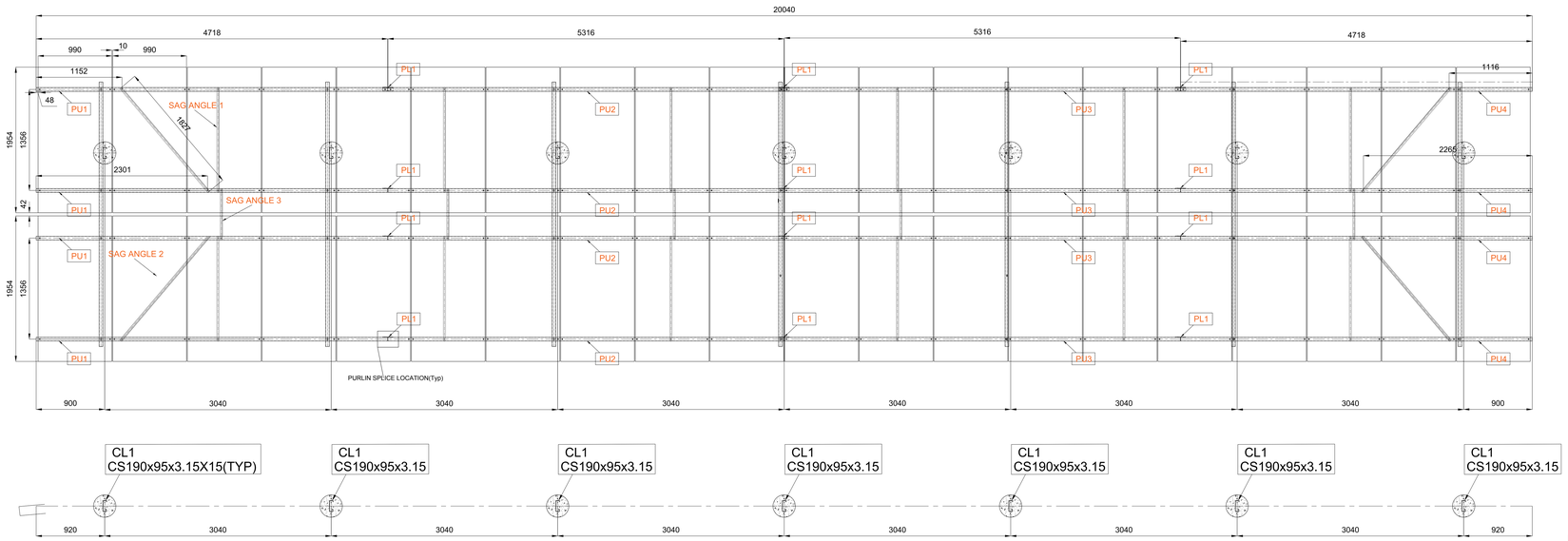

PLAN AT GROUND LEVEL AND MMS INCLINATION AT ZERO DEG.

GENERAL NOTES

1. ALL DIMENSIONS ARE IN MILLIMETERS UNLESS OTHERWISE SPECIFIED.
2. DO NOT SCALE THE DRAWING ONLY WRITTEN DIMENSIONS TO BE READ.

NOTES:(This note has to be read alongwith the Bill of material).

1. DIMENSIONS FOR COLD ROLLED STEEL ANGLE/CHANNEL SECTIONS SHALL BE AS PER BOM.
2. DIMENSIONS OF PLATES, FLAT BARS SHALL CONFORM TO IS:1730.
3. FABRICATION AND ERECTION SHALL BE CARRIED OUT IN ACCORDANCE WITH IS:800 AND IS:801.
4. ALL MMS MEMBERS TO BE HOT DIP GALVANIZED IN ACCORDANCE WITH IS:2629–1985 AND IS 4759. HOWEVER THE MINIMUM GALVANIZATION THICKNESS TO BE MINIMUM 80 MICRONS .GALVANIZATION SHALL BE DONE AFTER FABRICATION AND CUTTING OF HOLES.
5. HOLE SIZES ARE SHOWN AFTER GALVANIZATION/TREATMENT.
6. REMOVE ALL SHARP AND BURR EDGES.
7. THE PROTOTYPE SHALL BE INSPECTED JOINTLY BY SECI ,BHEL & FABRICATION VENDOR AT SHOP AND ANY MINOR MODIFICATION REQUIRED IN HOLE SPACING ,CUT LENGTHS ETC SHALL BE INCORPORATED IN FINAL MMS ASSEMBLY AS PER BOM.
8. NO SITE WELDING IS PERMITTED.
9. EVERY BOLT CONNECTION SHALL HAVE ONE SPRING WASHER +TWO PLAIN WASHER & HEXAGONAL NUT.
10. ALL FASTENER FOR MMS SHALL BE SS304 GRADE A2–70 CONFORMING TO IS 1363 FOR BOLT & NUT, IS 2016 FOR PLAIN WASHER & IS 3063 FOR SPRING WASHER.

BOLT TIGHTENING TORQUE VALUE MAXIMUM

BOLT VALUE MM	GRADE	TIGHTENING TORQUE VALUE (N–m)
M6	SS316–A4–70	5.90
M8	SS304–A2–70	14.5
M10	SS304–A2–70	30.0
M16	SS304–A2–70	121

* TIGHTENING TORQUE VALUES SUBJECT TO MINOR CHANGES W.R.T FIELD CONDITIONS.

Tolerance Table:

1	End Security:	+/- (0.2 mm)
2	CD of Slot	+/- (1 mm)
3	CD of Hole	+/- (1 mm)
4	Hole Dia	
	<10 mm	+/- (0.4 mm)
	>=10 mm	+/- (0.5 mm)
5	Slot Dimensions	
	<10 mm	+/- (0.5 mm)
	>=10 mm <30 mm	+/- (0.8 mm)
	>=30 mm	+/- (1.0 mm)
6	Length	
	Upto 3 mts	+/- (1 mm/m)
	3mts to 6 mts	+/- (1.5 mm/m)
7	Members section geometry.	No negative tolerance is permitted in the web(depth) of channel sections. All other dimensions to be as per IS 811-(Deviation of the profile shall not exceed +/- (0.5mm).
8	Angular Tolerance	+/-2 degrees
9	Thickness	No negative tolerance.
10	General assembly tolerance -linear	+/- (2mm)
11	General assembly tolerance -angular	+/- (2 deg).

* SUBJECT TO MINOR MODIFICATIONS AFTER PROTOTYPE.

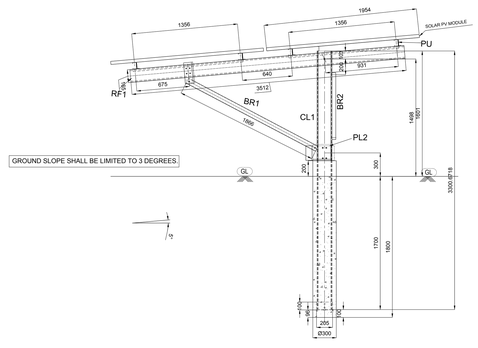

SIDE VIEW FOR TILT OF 05 Deg.

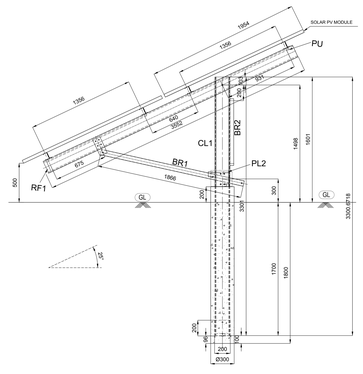

SIDE VIEW FOR TILT OF 25 Deg.

BOM FOR 1 MMS TABLE OF 40-PV MODULES

Annexure for GA Drg

1. REFER FABRICATION DRAWINGS FOR MEMBER DETAILS.

SCCL-STPP SITE-10MW

Mark No	Item Description (Dimensions in mm)	Grade	Galvanization	Lip	Nos.	Length/Area	CS Area	Unit Wt	Total wt - Ungalvanized (Approx)	Total wt - galvanized (Approx).
	COLD FORMED SECTION			mm		mm/mm²	cm2	kg/m DR kg/m²	kg	kg
	Column									
CL1	190CS95X3.15	E350	Hot dip galvanized	15	7	3301	12.0625	9.47	218.80	236.31
	Rafter									
RF1	165CS60X2.5	E350	with minimum 610 g/	15	7	3512	7.365	5.78	142.13	152.08
	Purlin		sqm and/or minimum							
*PU	85CS50X2.0	E350		15	4	20028	3.996	3.11	248.78	266.20
*	Refer drawing for purlin segments		coating thickness of 80							
	Strut Bracing									
BR1	70CU40X2	E350	microns for protection		7	1866	2.83	2.22	29.02	31.05
BR1A	50CU50x2.0	E350	against		4	3194	2.83	2.22	28.38	30.37
	HOT ROLLED SECTION									
	Plates		corrosion.Galvanization							
PL1-Web	Purlin splice (140X75X4)	E250			12	140	3	2.36	3.96	4.23
PL1-Flange	Purlin splice (140X40X4)	E250	shall conform to IS-		24	140	1.6	1.26	4.22	4.52
PL2	Rafter Plate (270x100x5)	E250			7	230	5	3.93	6.32	6.76
PL3	Column Plate (233x185x6)	E250	2629, 4759 & 4736 as		7	233	11.1	8.71	14.21	15.21
PL4	Bend plate (200x200x4)	E250			7	200	8	6.28	8.79	9.41
	Rod									
SG1	30LU30X2.0	E350	applicable.		4	1827	1.11	0.87	6.37	6.81
SG2	30LU30X2.0	E350			12	1406	1.11	0.87	14.70	15.73
SG3	30LU30X2.0	E350			6	690	1.11	0.87	3.61	3.86

Hardware -
1 set = 1 no. Bolt + 1 no. Hex. Nut + 2 no.s Round Plain Washers + 1 no. Spring Washer

Item Description	Grade	Specification	Nos for 1 table	Detail	Wt in gms-approx	kg-approx	Remarks
Item 1							
16mm (for column to rafter connection)	A2-70	SS304	7	M16x60	265	1.855	With Bush
Item 2							
12mm (for bracing to rafter)	A2-70	SS304	7	M12X35	45	0.315	
10mm (for bracing to column)	A2-70	SS304	7	M10x30	45	0.315	
10mm (Rafter to purlin)	A2-70	SS304	28	M10x30	45	1.26	
8mm (Purlin Splice conn.)	A2-70	SS304	96	M8X30	45	4.32	
8mm (Rafter Plate connection.)	A2-70	SS304	28	M8X30	30	0.84	
8mm(Sag Angle to purlin connection)	A2-70	SS304	44	M8x20	12	0.528	
Item 4							
Module Bolts M6 PV-Module requirement.	A4-70	SS316	160	M6x20	12	1.92	With additional solar washer
10mm (for column L angle to column)-Bottom of Column in the pile.		Mild Steel	14	M10X30	45	0.63	

NOTES:

1.PILE DETAILS WILL BE SUBMITTED THROUGH DIFFERENT MDL.

SOLAR PANEL DETAIL

MAKE	SIZE (MM)	Pitch–(Hor)mm	Pitch–(Ver)mm
Zhejiang Chint Electric	1954X990	946	1356

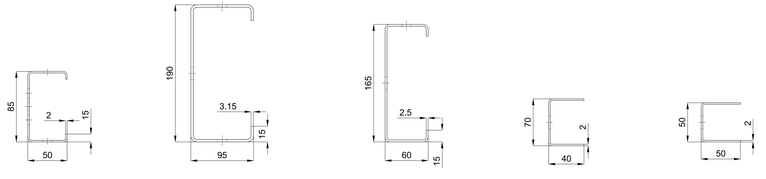

PU-PURLIN (CS85x50x2x15)

CL1-COLUMN (CS190x95x3.15x15)

RF1-RAFTER (CS165x60x2.5x15)

BR1 BRACING (CU70x40x2)

BR2 BRACING (CU50x50x2)

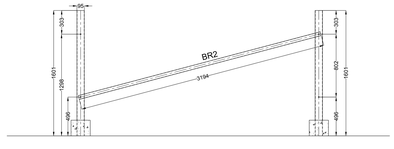

FRONT VIEW FOR BR–2

REV.	DATE	ALTERED / CHECKED / APPROVED	REV.	DATE	ALTERED / CHECKED / APPROVED
			01	25.04.19	CUSTOMER COMMENTS COMPLIED

	NAME	SIGN	DATE
DRAWN		NY	250419
CHECKED		PM	250419
APPROVED		MS	250419

DISTRIBUTION OF PRINTS

DEPT.	CODE
SC&PV	439

PROJECT TITLE : 129 MWp SOLAR POWER PROJECT FOR SCCL

CLIENT : SCCL-STPP-10MW

CONSULTANT: SECI

BHARAT HEAVY ELECTRICALS LIMITED.
ELECTRONICS DIVISION, BANGALORE

TITLE: GA OF MODULE MOUNTING STRUCTURE-STPP 10MW
FOR GROUND SLOPE LESS THAN OR EQUAL TO 3 DEGREES.

No. OF SHEETS	13
SHEET No.	01
REV	01

BHEL DRG. No. BHEL–SECI–SD–SCCL10–DWG–CIV–012

REF. DRG. No. | SIGN. & DATE | INVENTORY No.

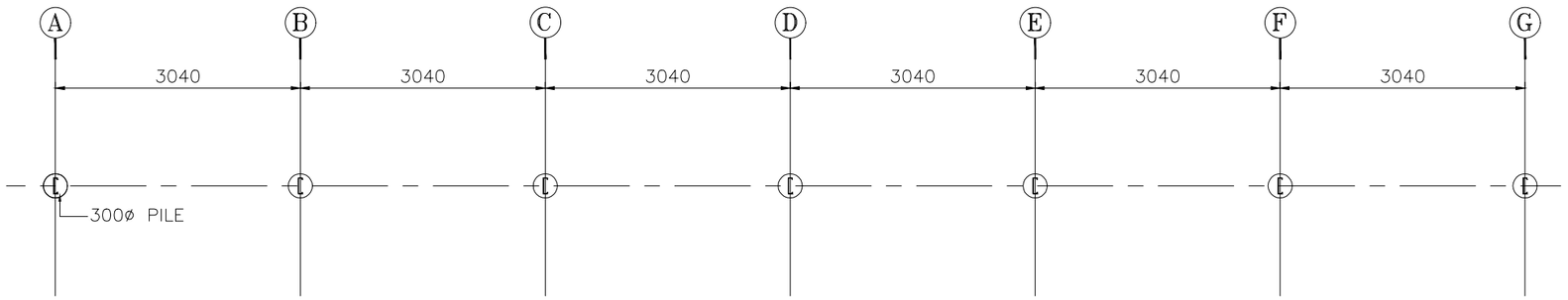

PILE FOUNDATION PLAN

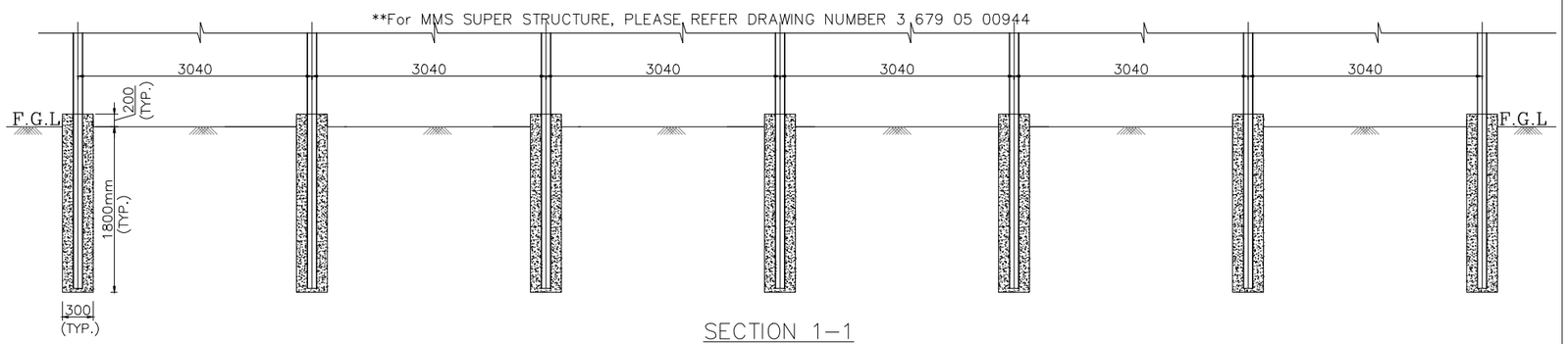

SECTION 1–1

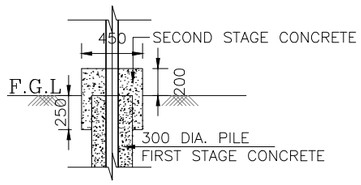

PILE CAP CASTING PLAN

NOTE: FIRST STAGE CONCRETE SHALL BE MADE ROUGH BY TOWELING AND CLEANING OUT LAITANCE AND CEMENT SLURRY BY USING WIRE BRUSH.

NOTES

1. THIS DRAWING SHALL BE READ IN CONJUNCTION WITH CONTRACT TERMS AND CONDITIONS, SPECIFICATION AND SCHEDULE OF ITEMS.
2. ALL DIMENSIONS ARE IN MILLIMETER AND LEVELS ARE IN METERS, UNO.
3. BOARD CAST–IN–SITU CONCRETE PILE CONFIRMING TO IS: 2611 (PART–1/SEC.–2) SHALL BE USED.
4. GRADE OF CONCRETE SHALL BE OF M25.
5. THE PILE LENGTH SHALL BE 1800MM BELOW NGL.
6. PILE SHALL BE CAST IN FULL LENGTH INCLUDING PROJECTION ABOVE GL. IN CASE THE CAP IS TO BE CAST IN SECOND STAGE, IT SHALL GO MIN. 250MM BELOW GL.
7. PILE CAPACITY UNDER LATERAL, UPLIFT AND COMPRESSION SHALL BE VERIFIED THROUGH FIELD TEST AS PER TEST PROGRAM.
8. TOLERANCE LIMITS FOR CASTING OF PILE SHALL BE 50MM IN BOTH DIRECTIONS.
9. GROUND SLOPE SHALL BE LIMITED TO 3 DEGREE.

LEGEND

℄	– CENTER LINE	THK	– THICKNESS
EL	– ELEVATION	TOC	– TOP OF CONCRETE
LVL	– LEVEL	TYP	– TYPICAL
GL	– GROUND LEVEL	UNO	– UNLESS NOTED OTHERWISE

REFERENCE DRAWINGS:

1. BHEL–SECI–SD–SCCL30–DBR–CIV–002 – GA OF MODULE MOUNTING STRUCTURE REV. 01

SAFE PILE CAPACITY FOR 1.8M DEEP BORED CAST IN–SITU PILE (MT) (AS PER SOIL REPORT)		
COMPRESSION	LATERAL	UPLIFT
5.17	0.988	2.25

SINGARENI COLLIERIES COMPANY LIMITED
129MWp SOLAR PV PLANT FOR SCCL AT TELANGANA

OWNER'S CONSULTANT:
SOLAR ENERGY CORPORATION OF INDIA

BHARAT HEAVY ELECTRICALS LTD
ELECTRONICS DIVISION, BANGALORE

TITLE: MODULE MOUNTING STRUCTURE FOUNDATION – TYPICAL GA & DETAILS AT 30MW MANUGURU

SCALE 1:100

DRAWING NO. BHEL–SECI–SD–SCCL30–DWG–CIV–030

SHEET 1 OF 1 REV. 00

DEPT. SC&PV

DISTRIBUTION

REV.	DATE	ALTD	CHD	APPD	REV.	DATE	ALTD	CHD	APPD	REV.	DATE	DRWN	CHD	APPD
										00	10.03.19	MN	SR	MK
											SIGN.	–SD–	–SD–	–SD–

1. SUBMITTED FOR APPROVAL.
2. DRAWING IS IN LINE WITH SECI COMMENTS ON STPP DRAWING SUBMITTED DURING MEETING DATED 07.05.2019 TO 09.05.2019.

DRAWING NO. BHEL–SECI–SD–SCCL30–DWG–CIV–010

COPY RIGHT AND CONFIDENTIAL
The information on this document is the property of BHARAT HEAVY ELECTRICALS LIMITED
It is supplied in confidence and may not be used other than for the purpose intended without prior written permission.

FOR TENDER PURPOSE ONLY

	A	B	C	D	E	F	G	H	I	J	K	L	M
1	**Sr.No.**	**Activity & Operation**	**Instruments**	**Class of Check**	**Type of Check**	**Quantum of Check**	**Reference Documents & Acceptance Standard**	**Format of Record**	**D*** (Records identified with (√) shall be issentially included by EPC vender in QA documentation)	**Cheking Agency**			**Remarks**
2								SR - Site Register SECI-SPV-QA-F-XXX SECI-SPV-QA-T-XXX (XXX - Inspection record form No. or Test report format no.)		**M'fr/ Supplier or Sub-Contractor**	**EPC Contractor**	**SECI or Owner**	
3	**1**	**General Requirements**											
4	a	Availability of requisite test set-up and equipment in good working condition with valid calibration at site well before commencement of concerned activity	As required/ agreed	Critical	Physical	Once prior to start of work & Monthly there after	Tech. Specs, Construction Drawings	SR	√		**x**	**x**	**Min. list of equipment** - CTM, Set of Seives for CA & FA, Elcometer (digital), Micrometer, Multimeter, Meggar, Torque Wrench, Moulds for casting of concrete/ mortar test samples, Curing tank of adequate size, SS measuring tape - 50m, Theodolite, leveling staff and associated equipment etc. for day to day work with proper storrage racks. The equipment shall be in adequate no. matching the site progress requirements. Functioning of laboratory equipment in proper working condition to be verified on monthly basis
5	b	Submission of QA & QC manpower deployment schedule based on agreed L-2 network	As required/ agreed	Critical	Verification	Before start of work	Tech. Specs, Construction Drawings	SR	√		**x**	**x**	
6	c	Availability of QA & QC manpower deployment based on agreed deployment schedule, Periodic review for augmentation as per actual progress	As required/ agreed	Critical	Physical	Once prior to start of work & Monthly there after	Tech. Specs, Construction Drawings	SR	√		**x**	**x**	
7	d	Submission of schedule/ programme of tests and inspection of civil works (survey, excavation, concreting, backfilling, brickwork, finishing works, roads, drains etc.) to be done monthly and quarterly based on agreed schedule	As required/ agreed	Critical	Physical	Once prior to start of work & Monthly/ Quarterly there after	Tech. Specs, Construction Drawings	SR	√	**x**	**x**	**x**	
8	e	Submission of actual work programme min. 3 days (72 hours) in advance to facilitate planning for quality checks as per approved QP	As required/ agreed	Critical	Physical	48 hours before start of actual work	Master programme/ schedule	SR	√	**x**	**x**	**x**	
9	f	Stacking and storage of construction materials and components at site	IS: 4062	Critical	Physical	Random	Tech. Specs, Construction Drawings & IS: 4062	SR	√	**x**	**x**	**x**	
11	**2**	**Surveying (Execution phase)**											
12	a	Availability of Calibrated Instruments, qualified & experieced staff at site	As required/ agreed	Critical	Physical	100%	Tech. Specs, Construction Drawings, Agreed deployment schedule	Calibration Report	√	x	x	x	
13	b	Ensure correct Boundary Layout and Latitude-Longitude Coordinates,True North	construction Drawings	Critical	Measurement	100%	Tech. Specs, Construction Drawings	SR	√	x	x	x	
14	c	GL (ground level), FGL (finished ground level) and Plinth Level, Check PBM(permanent bench mark) with Total Station/ Theodolite and after conformation carryout Peg marking	As required/ agreed	Critical	Measurement	100%	Construction Drawings	SR	√	x	x	x	
16	**3**	**Materials**											
17	A	*Cement*											
18	i	Fineness	As per IS: 4031	Critical	Review of MTC/ Physical	One test at Lab to corelate with MTC	IS:456,IS:269,IS:8112, IS:12269,IS:1489, Tech. Specs	Manufacturers Test Certificate (MTC's) and Laboratory Test results	√	**x**	**x**	**x**	Each consignment/ lot of cement shall be duly correlated with MTC If cement stored is more than 60 days in godown the same shall be re-tested for conformation with MTC
19	ii	Compressive Strength											
20	iii	Initial & final setting time											
21	iv	Chemical composition of Cement											
22	B	*Coarse Aggregates (CA)*											

	A	B	C	D	E	F	G	H	I	J	K	L	M
1	**Sr.No.**	**Activity & Operation**	**Instruments**	**Class of Check**	**Type of Check**	**Quantum of Check**	**Reference Documents & Acceptance Standard**	**Format of Record**	**D*** (Records identified with (√) shall be issentially included by EPC vender in QA documentation)	**Cheking Agency**			**Remarks**
2								SR - Site Register SECI-SPV-QA-F-XXX SECI-SPV-QA-T-XXX (XXX - Inspection record form No. or Test report format no.)		**M'fr/ Supplier or Sub-Contractor**	**EPC Contractor**	**SECI or Owner**	
23	i	Determination of Particle size (Sieve Analysis), Flakiness index, Elongation index	As per IS: 2386	Major	Visual	Once per 100 cum or part thereof (During monsoon moisture content to be checked every day)	IS:383,IS:2386, Tech. Specs	Lab Test results	√	x	x	x	Water content of concrete to be corrected as per results of moisture content
24	ii	Moisture content											
25	iii	Crushing Value, Impact value, Abrasion value		Critical		One test at Lab for each source/ on every change of source			√	x	x	x	These tests shall be carried out while establishing design mix. In case of change of source the design mix shall be re-validated for new source
26	iv	Specific Gravity, water absorption											
27	v	Bulk Density											
28	vi	Soundness											
29	vii	Presence of deleterious materials											
30	C	*Fine Aggregate (FA)*											
31	i	Gradation/Determination of Particle size (Sieve Analysis)	Balance, Oven etc. As per IS: 2386, 383	Major	Visual	Gradation - Once per 1000 cum or part there of Mosture content - Every day	IS:383,IS:2386,IS:456 , Tech. Specs	Lab Test results	√	x	x	x	Water content of concrete to be corrected as per results of moisture content
32		Moisture Content											
33	ii	Specific Gravity and density (for design mix concretes only)	As per IS: 2386, 383	Major	Visual	One test at Lab for each source/ on every change of source							
34	iii	Water absorption (for design mix concretes only)											
35	iv	Presence of deleterious materials											
36	D	*Concrete Admixture*											
37	i	Type of admixture			Review of MTC		IS: 9103, Approved design mix		√	x	x	x	Admixture shall be of brand and type as per approved design mix.
38	ii	Physical & Chemical properties			Review of MTC		IS: 9103, Manufacturer's Brochure						Each lot/ batch of admixurture shall acompany the Manufacturer's Brochure and shall be correlated with MTC
39	iii	Suitability											
40	E	*Bricks*											
41	i	Dimensional Tolerance, shape			Measurement/ Physical	As per relevant IS code/ one sample for 30,000 nos. or part there of	IS: 1077, IS: 13757, IS: 12894, Tech. Specs, Construction Drawings	Lab Test results	√	x	x	x	Efflorescence shall be checked at each source
42	ii	Compressive Strength											
43	iii	Water Absorption											
44	iv	Efflorescence			Visual								
45	E	*Water*											
46	i	Cleanliness - Test for ascertaining limit of solids		Major		One per 3 months for each source	IS:456,IS:3025 (part 18), Tech. Specs, Construction Drawings specification	Lab Test reports	√	x	x	x	Water to be used for concrete shall be of potable quality and shall meet requirements specifed in IS: 456
47	ii	Chemical Tests to ascertain the suitability for construction purposes - pH Value, Sulphate & Chloride content					IS:456,IS:3025 (part 22, 23), Tech. Specs, Construction Drawings	Lab Test reports	√	x	x	x	
48	F	*Reinforcement Steel*											
49	i	Identification & Size		Major	Visual	Each batch of delivery	IS:432,IS:1786,IS:1852, Tech Specs	SR	√	x	x	x	Reinforcement steel shall be stored properly at site to avoid rusting
50	ii	Freedom from cracks, surface flaws, lamination				Random in each shift			√	x	x	x	
51	iii	Tensile Test		Critical	Review of MTC	Each batch of delivery	IS:432,IS:1566,IS:1786, Tech Specs	Manufacturers Test Certificate (MTC's)	√	x	x	x	
52	iv	Yield stress/proof stress											
53	v	Percentage Elongation							√	x	x	x	
54	vi	Bend/Rebend Test											
55	vii	Reverse Bend Test for HDS wire					IS:432, Tec. Specs		√	x	x	x	
57	**3**	**Structural Steel Work {Example: Chequered plate cover, Panel supports, Rungs, Cat lader, Inserts, Fencing gate (MS) etc.}**											
58	i	Strutural Steel (Raw material)-Chemical Properties, Ultimate Tensile Strength(UTS), Yield Strength (YS), Percentage Elongation, Bend test		Critical	Review of MTC	For each batch of each section	IS: 2062, IS: 8500, Tech. Specs, Construction Drawings	Manufacturers Test Certificate (MTC's)	√	x	x	x	MTC to be correlated
59	ii	Dimensional Check - Secition dimensions, thickness		Critical	Measurement	10% of total quanity at Random			√	x	x	x	For Fencing gate - dimensional check 100%

	A	B	C	D	E	F	G	H	I	J	K	L	M
1	**Sr.No.**	**Activity & Operation**	**Instruments**	**Class of Check**	**Type of Check**	**Quantum of Check**	**Reference Documents & Acceptance Standard**	**Format of Record**	**D*** (Records identified with (√) shall be issentially included by EPC vender in QA documentation)	**Cheking Agency**			**Remarks**
2								SR - Site Register SECI-SPV-QA-F-XXX SECI-SPV-QA-T-XXX (XXX - Inspection record form No. or Test report format no.)		**M'fr/ Supplier or Sub-Contractor**	**EPC Contractor**	**SECI or Owner**	
60	iii	Visual checks for damages, rusting, pitting, scaling etc.		Major	Visual	100%	IS: 822, Tech. Specs, Construction Drawings, MTC, relevant BIS standards for painting	Manufacturers Test Certificate (MTC's)/ SR	√	x	x	x	
61	iv	Visual checks for welding defects, painting (surface preparation, primer coat, and Finishing coat - make and shade of paint, DFT) as applicable.		Major	Visual/ Measurement/ Review of MTC	10% of total quanity at Random			√	x	x	x	MTC to be correlated
62	v	Acceptance ofStructural steel works		Major	Physical/ Acceptance	Random	Tech. Specs, Construction Drawings	SR	√	x	x	x	
64	**4**	**Foundation System**											
65	**A**	**Bored Cast in-situ Concrete Piling (for MMS support)**											
66	**a**	**Execution**											
67	i	Ensuring correctness of layout		Critical	Physical	100%	Tech. Specs, Construction Drawings	SR	√	x	x	x	
68	ii	Checking of pile making as per drawing	Total Station	Major	Vsual								
69	iii	Checking of Centre line of Pile Group	Total Station	Critical	Physical			IS 2911, Tech Specs, Construction Drawings	√	x	x	x	1. During boring of pile, record SPT/ core recovery to ensure socketing length in the hard strata equivalent in terms of pile diameter in hard rock zone as per tech Specs and approved construction drawings. 2. In case of collapse of pile bore during drilling temporary MS lining shall be used. 3. Lines and levels to be checked 4. Each bore shall be cleaned of any loose materail by pressure jet washing/ cleaning by air jet 5.The column section shall pe placed and held in position in true vertical alignment using template/ tripod till initial setting of concrete 6. Concrete garde - as per Construction Drawing
70	iv	Check Pile Location	Total Station										
71	v	GL, Pile depth, diameter and alignment	As required		Measurement								
72	vi	Cleaning/ flushing of pile bore	As required	Major	Visual								
73	vii	Insertion & positioning of Column post in the bore hole (in case of embeded col. Leg) Placement of reinforcement and foundation bolts with template (inacse of fixing of col. with base plate & foundation bolt assembly)	As required	Critical	Visual/ Measurement								
74	viii	Acceptance of Pile casting - Shape, reinforcement or col. leg embedment (as aplicable), concreting, compacting with use of needle vibrator etc.	As required/ Agreed	Major	Visual								
75	ix	Grouting u/s of base plate	As required/ Agreed	Critical	Visual	100%	Tech. Specs & Construction drawings	SR	√	x	x	x	The type, grade and thickness of grout shall be as per approved drawing
76	**b**	**Testing**											
77	i	Initial pile load test - Compression (Vertical), Lateral (Horizontal), & Pull out (Tension)	Calibrated dial gauges, jack of required capacity, datum bars etc.	Critical	Physical	100% for 3 no. for each type of test or as specified in Tech Specs, Approved test pile layout	IS 2911, Tech Specs, Construction Drawings	Test Report	√	x	x	x	1. The R/F details shall be as per approved drawing for test plie (if applicable), 2. The test load shall be up to 2.5 times of required pile capacity in case of Compression and Lateral load and 2 times in case of Pull out test as per IS: 2911 (Pt. 4), 3. The location shall be as per approved pile test programme/ layout drawing 4. The test shall be carried out as per approved methodology 5. Test report along with test records shall be submitted in standard format as per IS:2911
78	ii	Routine pile tests - Pull out and Lateral		Critical	Physical	100% for 0.5% of total no. of working piles for each type of test	IS 2911, Tech Specs, Construction Drawings	Test Report					1. The piles for routine tests shall be selected at Random to represent total no. of job piles insalled 2. The test load for vertical and pull out shall be 1.5 times the required pile capacity 3. The test shall be carried out as per approved methodology. 4. The Test report along with test records shall be submitted in standard format as per IS:2971 (Pt. 4)

	A	B	C	D	E	F	G	H	I	J	K	L	M
1	**Sr.No.**	**Activity & Operation**	**Instruments**	**Class of Check**	**Type of Check**	**Quantum of Check**	**Reference Documents & Acceptance Standard**	**Format of Record**	**D*** (Records identified with (√) shall be issentially included by EPC vender in QA documentation)	**Cheking Agency**			**Remarks**
2								SR - Site Register SECI-SPV-QA-F-XXX SECI-SPV-QA-T-XXX (XXX - Inspection record form No. or Test report format no.)		**M'fr/ Supplier or Sub-Contractor**	**EPC Contractor**	**SECI or Owner**	
80	**B**	**Cable Trench/ Building & Equipment Foundations**											
81	**a**	Before Excavation											
82	i	Ensuring correctness of layout		Critical	Physical	100%	Tech. Specs, Construction Drawings	SR	√	x	x	x	
83	ii	Checking of trench marking & alignment		Major	Visual		Tech Specs, Construction Drawings						
84	**b**	Excavation											
85	i	Dimensional conformity including diagonal check		Ctitical	Visual / Measurement	100%	IS:3764, Tech Specs, Construction Drawings	SR	√	x	x	x	
86	ii	Excavated earth kept away from edges		Minor	Visual	Random		SR	√	x	x	x	
87	**c**	Acceptance of Trench/ Foundation casting - Shape, reinforcement, shuttering, concreting, etc.		Minor	Physical	100%	Tech. Specs, Construction Drawings	SR	√	x	x	x	
89	**5**	**Foundation Bolts / Inserts/ Concrete embedments**											
90	i	Visual check of mechanical damage and galvanising painting if applicable on inserts			Visual / Measurement	100%	As per Tech Specs, Construction Drawings	SR	√	x	x	x	
91	ii	Bolt and assecories, inserts - Dimensions (total & threaded length & dia of bolt, size & thk of embedment and lugs etc.), Nos											
92	iii	Verticality, alignment, levels, pitch distance, embeded and projected length of bolt											
93	iii	Use of template for Alignment and Level checking											
94	iv	Acceptance of foundation bolt assembly / inserts in postion											
96	**6**	**Formwork**											
97	i	Materials & Accessories	As agreed/ required	Major	Visual	Once before start of work	IS :456 , Other relevant BIS Standard, Tech. Specs, Construction Drawings	SR	√	x	x	x	
98	ii	Soundness of staging, shuttering and scaffolding including application of mould oil/ release agent	As agreed/ required	Major	Visual	Once before start of work	Manufacturer's specs, IS :3096, IS:4014, IS: 4990, Tech. Specs, Construction Drawings	SR	√	x	x	x	
99	iii	Dimensional Check, alignment & levels as per drawing and tolerences		Major	Visual/ Measurement	100%	Tech. Specs, Construction Drawings	SR	√	x	x	x	
100	iv	Proper sealing of joints, Acceptance of formwork before concreting		Major	Physical/ Visual	Before start of concreting	As per provisions, tolerences, Tech. Specs, Construction drawings		√	x	x	x	
102	**7**	**Placement of Reienforcement Steel**											
103	i	Check whether Bar bending schedule (BBS) with necessary lap, spacers & chairs is available before start of cutting & bending of bars	As agreed/ required	Major	Visual/ physical	Random in each shift at each work site	Tech. Specs, Construction Drawings, IS: 2502	SR	√	x	x	x	
104	ii	Check whether cutting and bending of bars is as per BBS and placement conforms construction drawings			Visual/ measurement								
105	iii	Check whether all joints and crossing of bars are tied properly with right gauge and annealed wire			Visual								

	A	B	C	D	E	F	G	H	I	J	K	L	M
1	**Sr.No.**	**Activity & Operation**	**Instruments**	**Class of Check**	**Type of Check**	**Quantum of Check**	**Reference Documents & Acceptance Standard**	**Format of Record**	**D*** (Records identified with (√) shall be issentially included by EPC vender in QA documentation)	**Cheking Agency**			**Remarks**
2								SR - Site Register SECI-SPV-QA-F-XXX SECI-SPV-QA-T-XXX (XXX - Inspection record form No. or Test report format no.)		**M'fr/ Supplier or Sub-Contractor**	**EPC Contractor**	**SECI or Owner**	
106	iv	Check for proper cover,spacing of bars, spacers & chairs after the reinforcement cage has been put inside the foundation			Visual								
107	v	Check whether lapping of bars are tied properly with right gauge and annealed wire			Visual								
109	**8**	**Concrete**											
110	i	Availability of approved Design Mix (for all specified grades)		Critical	Physical	For each specified grade of concrete	IS :456, Tech Specs, Construction Drawings	Approved mix design	√		x	x	The concrete shall be as per approved design mix and the materials (cement, coarse and fine aggregate shall be from the same source considered during mix trials. The mix design shall be verified and approved in case of change of source of any of the matearials
111	ii	Minimum cement content (as applicable in MMS piling and foundation/ below ground works)		Critical	Physical	For piling and foundation works	IS: 456, Tech. specs, Construction drawings	SR	√		x	x	The minimum cement content shall correspond to exposure conditions and/ or, suplphate contents in ground water/ soil
112	iii	Trial mixes to ascertain the workability and cube strength	As per recommended mix design from specialist agency	Critical	Physical/ Testing	One for each mix proportion	Tech. Specs, IS: 456	Lab Test Reports	√	x	x	x	Necessary correction for moisture content and water absoption according to mix design recommendations may be carried out during trial mix
113	iv	Mixing of concrete- check for quanities of cement, CA, FA and water used, Concrete shall be homogenous	Mixing shall be done in a approved mixer/ batching plant (conforming to IS: 4926/ 4925)	Major	Physical	Mixer/ Batcher to be calibrated at the time of starting and subsequently once in tree months	IS: 4925, IS: 4926	Calibration Report/ Certificate	√	x	x	x	Review of calibration chart/ Certificate as per IS: 4926 Qty. of materials including cement consumptionshall be available through on line printer
114	v	Handling & trasportation	As required	Major	Physical	100%	As per approved/ agreed construction methodology	SR		x	x	x	Concrete shall be placed within 30 minutes of its removal from mixer
115	vi	Placement of concrete	As required	Major	Visual/ Physical	100%			√	x	x	x	
116	vii	Compacting	As required	Major	Physical	At Random			√	x	x	x	
117	viii	Curing	As required	major	Physical	At Random	IS: 456	SR		x	x	x	
119	**9**	**Concrete Testing & Acceptance**											
120	i	Workability - Slump Test		Critical	Physical	At the time of concrete pouring at site every 2 hrs	IS:456, IS:516,IS:1199, Tech Specs, Construction Drawings	Test Results / SR	√	x	x	x	
121	ii	Crushing strength - (Works test cubes)		Critical	Physical	Testing	IS:456, IS:516,IS:1199, Tech Specs, Construction Drawings	Test Results/ SR	√	x	x	x	**MMS Pile** - 6 cubes (3 for 7 day test & 3 for 28 day strength) per sample for each 5 cum or part there off **Building work and Equipment/ Misc foundations etc.** - 6 cubes (3 for 7 day test & 3 for 28 day strength) per sample for each 25 cum or part there off
122	iii	Acceptance of concrete work - Dimensional check (dimensions, levels etc), placement of bolts, inserts, pockets, pitch distance for bolts etc.	As required & dimensional tolerences	Major	Visual/ Measurement	100%		Joint Protocol between Civil Conractor, EPC Vendor and SECI/ Owner where applicable/ SR	√	x	x	x	
124	**10**	**Acceptance of Hardened Concrete**											
125	i	Dimensional check (dimensions, levels etc), workmanship, finsishing after removal of shuttering	As required & dimensional tolerences	Major	Visual/ Measurement	At Random			√	x	x	x	

	A	B	C	D	E	F	G	H	I	J	K	L	M
1	**Sr.No.**	**Activity & Operation**	**Instruments**	**Class of Check**	**Type of Check**	**Quantum of Check**	**Reference Documents & Acceptance Standard**	**Format of Record**	**D*** (Records identified with (√) shall be issentially included by EPC vender in QA documentation)	**Cheking Agency**			**Remarks**
2								SR - Site Register SECI-SPV-QA-F-XXX SECI-SPV-QA-T-XXX (XXX - Inspection record form No. or Test report format no.)		**M'fr/ Supplier or Sub-Contractor**	**EPC Contractor**	**SECI or Owner**	
126	ii	Water tightness test for liquid retaining structures/ tanks	As required	Critical	Physical/ Testing	100%	IS: 3370 (Pt.4), Tech Specs, Construction Drawings	SR/ Test Records	√	x	x	x	Water tightness test shall be performed for Under ground (UG) water tank, Septic tank
128	**11**	**Excavation & filling in foundations, trenches, plinth & grading works**											
129		**Excavation**											
130		Nature, Type of soil/ rock before and during excavation		Major	Visual	Random in each shift	Tech. Specs., Construction Drawings	SR		x	x	x	
131		Initial GL before start of excavation		Major	Measurement	100%		SR	√	x	x	x	
132		Final shape/ size & dimensions of excavation		Major	Measurement	100%		SR	√	x	x	x	
133		Final excavation levels		Major	Measurement	100%		SR	√	x	x	x	
134		Side slope of final excavation		Major	Measurement	Random in each shift		SR		x	x	x	
135	**12**	**Fill / Backfill**											
136	i	Suitability of borrowed earth for filling (if applicable) - Grain size analysis, Atterberg limits, Free swell index, Organic matter		Major	Physical	One in every 2000 cum or part there of for each type and source of fill material subject to min. 2 samples	IS: 2720 (Pt. IV), IS: 2720 (Pt. XI), Tech Specs, Construction Drawings	Lab Test Results/ SR	√	x	x	x	The parameter should not be worse than the parameter of the existing soil in plant area
137	ii	Optimum moisture content (OMC), Max. dry density (MDD) before fill		Critical	Visual	At Random	IS: 2720 (Pt. I), IS: 2720 (Pt.VII), Tech Specs, Construction Drawings	Lab Test Results/ SR	√	x	x	x	
138	iii	Layer thickness, Compaction procedure		Major	Visual	At Random	Approved Methodology, Tech. Specs, Construction Drawings	SR	√	x	x	x	The layer thickness, Type & Capacity of roller, No. of passes shall be as per approved methodology, Construction Drawing, Tech. Specs
139	iv	Degree of compaction - 1. Dry density by proctor needle penetration 2. Earth filling - In-situ Dry density (core cutter or sand replacement method) or Sand Filling - In-situ Relative density (Density Index)		Critical	Physical	(i) For foundation fill/ backfill - One for every 10 foundations at Random for each compacted layer (ii) For area grading/ filling - one every 1000 sqm area for each compacted layer	IS: 2720 (Pt. XXIX), IS: 2720 (Pt. XXVIII), IS: 2720 (Pt. XIV), Tech Specs, Construction Drawings	Test Results/ SR	√	x	x	x	
141	**13**	**Brick masonry work**											
142	i	Soaking of Bricks before use		Major	Physical	100%	IS: 2250	SR		x	x	x	
143	ii	Grading of sand, Mortar mix / proportion, Compressive strength, Consistency		Major	Physical/ Test	At Random	IS: 2250, IS: 2116, Tech Specs, Construction Drawings / As per Design Specification	Lab Test Results/ SR		x	x	x	The sand grading shall conform to IS: 2116
144	iii	Workmanship, Verticality (Plumb) / Alignment		Major	Physical/ Measurement	100%	IS: 2212, IS: 1905, Tech Specs, Construction Drawings	SR	√	x	x	x	
145	iv	Check for Bond/closers, joints		Major	Visual	At Random	IS: 2250	SR		x	x	x	
146	v	Curing		Major	Visual	100%	IS: 2250 / As perTech. Specification	SR		x	x	x	
148	**12**	**Cement Plaster**											

	A	B	C	D	E	F	G	H	I	J	K	L	M
1	Sr.No.	Activity & Operation	Instruments	Class of Check	Type of Check	Quantum of Check	Reference Documents & Acceptance Standard	Format of Record	D* (Records identified with (√) shall be issentially included by EPC vender in QA documentation)	Cheking Agency			Remarks
2								SR - Site Register SECI-SPV-QA-F-XXX SECI-SPV-QA-T-XXX (XXX - Inspection record form No. or Test report format no.)		M'fr/ Supplier or Sub-Contractor	EPC Contractor	SECI or Owner	
149	i	Quality & Grading of sand, Check for mix proportion, wetting the surface etc		Major	Physical	At Random	IS: 2116, IS: 2386 (Pt. I & II), IS: 1542, Tech Specs	Lab Test Results/ SR		x	x	x	Sand to be used shall be free from deleteriousmaterials, Grading shall conform to Table-I of IS: 2116
150	ii	Plaster & grooves - Thickness, Evenness & Finishing, Trueness os palstering system		Major	Visual/ Measurement	At Random in each shift	Tech Specifications, Construction Drawings	SR	√	x	x	x	Trueness - Deviation not more than 4mm when checked with straight edge of 2m length
151	iii	Hacking, Raking of joints, Cleaning the surface, Removing all loose particles, Wetting the surface etc		Major	Visual	At Random in each shift	IS 1661, Tech Specs	SR		x	x	x	
152	iv	Curing		Minor	Physical	100%	IS 1661, Tech Specs	SR		x	x	x	
154	14	**Painting System - Plastered Masonry & Concrete surface**											
155	i	Materials & accessories - Approval for Paint, Color shade and Brand- Dry distemper, Oil Bound Distemeper, Acrylic Emulsion, Chemical resistant, Oil resistant Paint, Weather proof acrylic exterior paint, water proof cement paint etc.	As approved by SECI/ Owner	Critical	Review of MTC	Each batch of delivery	Tech Specs, Construction Drawings	MTC/ SR	√	x	x	x	MTC shall be correlated with the material received
156	ii	Surface preparation	As required	Minor	Physical	Random in each shift	IS: 2935 (Pt.1), Tech Specs, Construction Drawings	SR	x	x	x	x	
157	iii	Number of coats	As required	Major	Physical	Random in each shift	Tech Specs, Construction Drawings	SR	x	x	x	x	
158	iv	Application and Acceptance of painted surface	As required	Major	Physical	Each surface at Random							
160	15	**Floor finishes & Alied works**											
161	i	Preperation of Sub-grade			Physical	At Random for each building	Tech. Specs, Construction Drawings	SR	√	x	x	x	
162	ii	Plinth filling in layers (stone agrregates/ rubble with interstices filled with sand), ramming & compaction			Physical	At Random for each building	IS: 2720, Tech. Specs, Construction Drawings		√	x	x	x	Quality Checks as aplicable to Fill/ Back fill
163	iii	Check providing shuttering, reinforcement (if applicable)			Physical	At Random for each building	Tech. Specs, Construcion Drawings			x	x	x	Quality Checks as aplicable to Shuttering/ Reinforcement placement
164	iv	Checking the Panel size (as applicable)			Physical	At Random for each building	IS: 5491, Tech. Specs, Construcion Drawings			x	x	x	The concrete shall be cast in alternate panels in chess board fashion, panel size as specified in Construction Drawing or 25 sqm
165	v	Availability of Design mix (if applicable)			Visual	At Random for each building	Tech. Specs, Construcion Drawings	Mix Design Report/ SR		x	x	x	
166	vi	Clearance for concreting (as applicable)			Physical	100%	Tech. Specs, Construction Drawings	Joint Protocol between Civil Contractor, Eqpt. Supplier/ EPC Vendor & SECI/ Owner SR		x	x	x	
167	viii	Performing concreting ensuring Grade/Mix Proportions, Compaction, Thickness and Finish			Physical	At Random per shift	IS; 456, Tech. Specs, Construction Drawings	SR	√	x	x	x	Quality Checks as aplicabel to Concrete Work
168	viii	Curing			Visual	100%	IS: 456, Tech. Specs	SR		x	x	x	Minimum up to 10 days from date of casting
169	ix	Testing of Concrete Cubes for Flooring			Physical	One sample for every 20 Cum of concreting or part thereof for each days concreting (one sample consists of min 3 test cubes for 28 days strength)	IS:456, IS:516,IS:1199 and Design specification	Lab Test Reports					
170	x	Tiled flooring/ dado											

	A	B	C	D	E	F	G	H	I	J	K	L	M
1	**Sr.No.**	**Activity & Operation**	**Instruments**	**Class of Check**	**Type of Check**	**Quantum of Check**	**Reference Documents & Acceptance Standard**	**Format of Record**	**D*** (Records identified with (√) shall be issentially included by EPC vender in QA documentation)	**Cheking Agency**			**Remarks**
2								SR - Site Register SECI-SPV-QA-F-XXX SECI-SPV-QA-T-XXX (XXX - Inspection record form No. or Test report format no.)		**M'fr/ Supplier or Sub-Contractor**	**EPC Contractor**	**SECI or Owner**	
171	a	Material - Glazed ceramic Tiles, Vitrified Ceramic Tiles, Mosaic Tailes, Acid alkali Tiles, Heavy duty cement concrete tiles	As agreed/ required	Critical	Review of MTC & Test Reports	Each lot of material received	IS:13755, IS:1237, IS:8042, Tech Specs, Construction Drawings	MTC/ SR	√	x	x	x	MTC shall be correlated for all the parameters specified in Tech. Specs, BIS Standard
172	b	Finishing & Acceptance		Major	Physical	100%	IS: 1443, Tech Specs, Construction Drawings						
173	xi	IPS with or without IRONITE (as aplicable)		Major	Physical	At Random per shift	IS: 5491, Tech. Specs, Construction Drawings	SR	√	x	x	x	
174	xi	Fixing of Panel Dividers for finishing course (3 mm Thk Glass/ 2mm Thk Aluminium strip) (if applicable)		Major	Physical	At Random per shift	Tech Specs, Construction Drawings	SR	√	x	x	x	
175	xii	Anti abrasion/ anti wearing epoxy coating (if aplicable)											
176	a	Material	As agreed/ required	Critical	Approved Make and Type	Each lot of material received	Tech Specs, Construction Drawings, Manufacturer's Brochure/ Recommendations	manufacturer's Brochure/ SR	√	x	x	x	Material specifications to be correlated with Manufacturer's Brochure
177	b	Finishing & Acceptance		Major	Physical	100%	Tech Specs, Construction Drawings	SR	√	x	x	x	
178	xiv	Kota stone flooring and skirting (as aplicable)											
179	a	Material	Quality, Texture, Thickness, Colour fro approved source	Major	Physical	Each batch of delivery	Tech Specs, Construction Drawings	SR	√	x	x	x	
180	b	Finishing & Acceptance		Major	Physical	100%	Tech Specs, Cosntruction Drawings	SR	√	x	x	x	
181	xv	Acid/ Alkali resistant tile flooring/ dado											
182	a	Material -Tiles, Mortar, Sealing, Fillers etc.	Thickness, Quality,	Critical	Approved source, Review of MTC/ Test Report	Each batch of delivery	Tech Specs, Construction Drawings	SR	√	x	x	x	The acid alkali resistant tile flooring nd dado shall be provided in battery room as per approved Arch finishing details
183	b	Finishing & Acceptance	Workmanship	Major	Physical	100%	Tech Specs, Construction Drawings	SR	√	x	x	x	
184	xvi	Interlocking Blocks											
185	a	Materials	Size/ Shape, colour shade, Grade of Concrete	Critical	Approved source, Review of MTC/ Test Report	Each batch of delivery	BS: 6717, Tech Specs, Construction Drawings	SR	√	x	x	x	
186	b	Final finishing & Acceptance	As agreed/ required	Major	Physical	100%	BS: 7533 (Pt.3), Tech Specs, Construction Drawings	SR	√	x	x	x	
188	**16**	**Damp Proof Course**											
189	i	Material - Hot bitumen & water proofing materials etc.	As agreed/ required	Critical	Review of MTC	Each batch of delivery	IS: 702, Tech. Specs, Cosntruction Drawings	SR	√	x	x	x	
190	ii	Acceptance of Damp Proof Course - Thickness, Grade of PCC, Application of Bitumen layer etc.	As agreed/ required	Major		100%	Tech Specs, Construction Drawings	SR	√	x	x	x	
192	**17**	**Grouting of pockets/ underside of base plate**											
193	i	Material	As required/ Agreed	Critical	Review of MTC/ Physical	Each batch of delivery	Tech. specs, Construction Drawings, Manufacturerr's catelogue	SR	√	x	x	x	In case of ready mixed grout MTC to be correlated with Manufacturerr's catelogue
194	ii	Type of Mix	Anti shrink cement grout/ Ready mixed - Fluid mix, stiff mix as required	Major	Physical	At Random prr shift of grout application	Tech. specs, Construction Drawings	SR	√	x	x	x	In case of cement grout anti shrink compound shall be added as per provisions of relevant IS/ Cosntruction Drawing
195	iii	Mixing, placement, application	As required	Major	Visual	At Random prr shift of grout application	Tech. Specs, Construction Drawings	SR	√	x	x	x	
196	iv	Crushing Strength - Test cubes	As required	Major	Physical/ Testing	3 cubes for entire grouting work	IS: 4031 (Pt.6), Tech Specs, Construction Drawings	SR/ Lab Test Report	√	x	x	x	

	A	B	C	D	E	F	G	H	I	J	K	L	M
1	Sr.No.	Activity & Operation	Instruments	Class of Check	Type of Check	Quantum of Check	Reference Documents & Acceptance Standard	Format of Record	D* (Records identified with (√) shall be issentially included by EPC vender in QA documentation)	Cheking Agency			Remarks
2								SR - Site Register SECI-SPV-QA-F-XXX SECI-SPV-QA-T-XXX (XXX - Inspection record form No. or Test report format no.)		M'fr/ Supplier or Sub-Contractor	EPC Contractor	SECI or Owner	
197	v	Acceptance of Grouting	Thickness, Finished level etc.	Major	Physical	!00% of 20 % of grout work at Random	Tech. Specs, Construction Drawings	SR	√	x	x	x	
199	18	**Precast Concrete**											
200	a	**Bought Out Units (Precast boundary wall units - Slab Panels, Column etc., Trench Covers , Manhole Covers, Paver Blocks etc.)**											
201	i	Crushing strength	As required	Critical	Review of MTC/ Test Reports	100% for Each batch of delivery	IS: 456, IS:516, IS: 1199, Tech Specs, Construction Drawings	MTC	√	x	x	x	Sampling as per IS: 456, Vendor record review
202	ii	Workmanship, dimentions, R/F	As require/ agreed	Major	Review of MTC/ Physical	Each batch of delivery at Random	Tech Specs, Construction Drawings	MTC/ SR	√	x	x	x	Vendor record review, Physical check at Random
203	b	**Cast at site (if applicable)**											
204	i	Crushing strength - Test Cubes	As required	Critical	Testing		IS: 456, IS:516, IS: 1199, Tech Specs, Construction Drawings	SR	√	x	x	x	1 sample of 6 cubes (3 for 7 days strength, 3 for 28 days strength) for each 5 cum of concrete with minimum 1 sample per shift of concrete work
205	ii	Workmanship, dimentions, R/F	As required/ agreed	Major	Physical	At Random	Tech Specs, Construction Drawings	SR		x	x	x	
206	c	**Acceptance of pre-cast concrete units**											
207	i	Bought Out Units - Check for any breakage, damage during handing & trasport, erection at site (levels) etc.	As required/ Agreed	Major	Visual	At Random	Tech Specs, Construction Drawings	SR	√	x	x	x	
208	ii	Cast at site (if applicable) - Check for curing, damage during handling, erection at site (level) etc.	As required/ Agreed	Major	Visual	100% of 10% at Random	Tech Specs, Construction Drawings	SR	√	x	x	x	
210	19	**Joints In concrete**											
211	i	Joint Material - Bitumen inpregnataed fiber board, PVC water stop, Sealing compound - Bitumastic/ polysulphide, Hydrophilic strip, Expanded polysterene (thermocol) board etc.	As per manufacturer's standards	Critical	Review of MTC	Each batch of delivery	Tech. Specs, Construction Drawings, IS: 1838, IS:1834, IS:2200	MTC	√	x	x	x	
212	ii	Acceptance of installation	As agreed/ required	Major	Physical	Each installation at Random	Tech. Specs and Construction Drawings	SR	√	x	x	x	
214	20	**Underdeck Insulation Works**											
215	i	Insulation material - Mineral/ Glass wool, galvanized wire neting, Aluminium foil, fasteners etc.	As agreed/ required	Critical	Review of MTC/ Test Reports	Each lot received at site	Tech. Specs and Construction Drawings	MTC/ Test Reports/ SR	√	x	x	x	All tests as per Tech. Specifications
216	ii	Acceptance of installation	As agreed/ required	Major	Physical	Each installation	Tech. Specs and Construction Drawings	SR	√	x	x	x	
218	21	**False Ceiling**											
219	i	Materials - Gypsum board/ Tiles, Particle board tiles, Al tiles/ Strips, GI hangers, AL/ GI Tee support, AL/ GI Edge angle, Fasteners etc.	As agreed/ required	Critical	Visual/ Physical, Review of MTC	Each lot received at site	IS:2095, IS:8183, Tech. Specs and Construction Drawings	MTC/ SR	√	x	x	x	Compare MTC with Tech. Specifications and requirements
220	ii	Acceptance of Installation	As agreed/ required	Major	Visual/ Physical	Random	Tech. Specs and Construction Drawings	SR		x	x	x	
222	22	**Doors, Windows, Ventilators, Glass/ Glazing and Grill**											

	A	B	C	D	E	F	G	H	I	J	K	L	M
1	**Sr.No.**	**Activity & Operation**	**Instruments**	**Class of Check**	**Type of Check**	**Quantum of Check**	**Reference Documents & Acceptance Standard**	**Format of Record**	**D*** (Records identified with (√) shall be issentially included by EPC vender in QA documentation)	**Cheking Agency**			**Remarks**
2								SR - Site Register SECI-SPV-QA-F-XXX SECI-SPV-QA-T-XXX (XXX - Inspection record form No. or Test report format no.)		**M'fr/ Supplier or Sub-Contractor**	**EPC Contractor**	**SECI or Owner**	
223	i	Door Frame (Hollow steel metal, Aluminium, Wooden etc. including fittings such as hold fasts etc.)	As agreed/ required	Critical	Visual, Physical, Reviewof MTC/ Test Reports	Each lot received at site	Tech. Specs and Construction Drawings	MTC/ Lab Test Reports/ SR	√	x	x	x	
224	**a**	**Steel Doors**											
225	i	Materials (MS sheet & Stiffeners, fasteners,hinges, jambs, lock strike plate, hydraulic door closer, fittings and fixtures etc)	As agreed/ required	Critical	Visual/ Physical/ Review of MTC, Test Report	Each lot received at site	IS:2062, Tech. Specs and Construction Drawings	MTC/ Lab Test Report/ SR	√	x	x	x	Review of MTC/ Test Report
226	ii	Finishing & Acceptance - Surface preperation for painting, primer & finishing coat, DFT	As agreed/ required	Major	Visual/ Physical	Random	Tech. Specs and Construction Drawings	SR	√	x	x	x	
227	**b**	**Flush Doors**											
228	i	Shutters, Teak beading	As agreed/ required	Critical	Review of MTC/ Test Report	Each lot received at site	IS:2202, Tech. Specs and Cosnstruction Drawings	MTC/ Lab Test Report/ SR	√	x	x	x	
229	ii	Acceptance	As agreed/ required	Major	Visual/ Physical	Random	Tech. Specs and Construction Drawings	SR		x	x	x	
230	**c**	**Aluminium doors and Partition works**											
231	i	Materials- Aluminium sections (average thickness, alkali resistant, anodisation, power coating and colour shade etc.), fittings and fixtures. floor spring, hydraulic door closer, hinges, etc.	As agreed/ required	Critical	Visual/ Physical/ Review of Test Report	Each lot received at site	IS:1948, IS;1949, IS:733, IS:1285, IS:1868, IS:11857, Tech. Specs and Construction Drawings	SR/ Lab Test Reports	√	x	x	x	Review of Test Report For anodization check as per Tech. Specs and Construction Drawings Power coating, colour shade as applicable as per Tech. Specs and Construction Drawings
232	ii	Finishing & Acceptance - fabrication & erection, fitting etc..	As agreed/ required	Major	Visual/ Physical	Random	Tech. Specs and Construction Drawings	SR		x	x	x	
233	**d**	**Grill**											
234	i	Materials - Aluminium, MS, Anodization in case of aluminium	As agreed/ required	Critical	Visual/Physical/ Review of Test Report	Each lot received at site	Tech. Specs and Construction Drawings	SR/ Lab Test Reports	√	x	x	x	Review of Test Reports
235	ii	Finishing & Acceptance - erection, fitting, painting in case of MS grill etc.	As agreed/ required	Major	Visual/ Physical	Random	Tech. Specs and Construction Drawings	SR		x	x	x	
236	**e**	**Rolling Shutters**											
237	i	Surface finish, Thickness of plate, mechanically operated	As agreed/ required	Critical	Visual/ Physical/ review of MTC	Random for each lot of delivery	IS:8248, Tech. Specs & Construction Drawings	SR	√	x	x	x	
238	ii	Finishing and Acceptance -Painting , DFT	As agreed/ required	Major	Visual/ Physical	Random	Tech. Specs and Construction Drawings	SR		x	x	x	
239	**f**	**Glass and Glazing**											
240	i	Material - Clear float glass, wired glass, tinted glass, ground glass, figured glass, thickness	As agreed/ required	Major	Review of MTC/ test reports	For each lot received at site	IS: 14900, IS:1081, IS: 3548, IS:5437 Tech Specs and Construction Drawings	SR	√	x	x	x	
241	ii	Installation, finishing and acceptance	As agreed/ required	Major	Visual/ Physical	Random	Tech Specs and Construction Drawings	SR	√	x	x	x	
243	**23**	**Precast Concrete Boundary Wall**											
244		Acceptance of boundary wall- Finising, Alignment Dimensions etc.	As agreed/ required	Major	Physical		Tech Specs and Construction Drawings	SR		x	x	x	For inspection of precast concrte units -refer S.No. 18
246	**24**	**Roof Water Proofing**											
247	i	Methodology for the application of water proofing system	As required	Critical	Review	for each type of treatment	Tech Specs and Const. Drawings						
248	**a**	Materials											

	A	B	C	D	E	F	G	H	I	J	K	L	M
1	**Sr.No.**	**Activity & Operation**	**Instruments**	**Class of Check**	**Type of Check**	**Quantum of Check**	**Reference Documents & Acceptance Standard**	**Format of Record**	**D*** (Records identified with (√) shall be issentially included by EPC vender in QA documentation)	**Cheking Agency**			**Remarks**
2								SR - Site Register SECI-SPV-QA-F-XXX SECI-SPV-QA-T-XXX (XXX - Inspection record form No. or Test report format no.)		**M'fr/ Supplier or Sub-Contractor**	**EPC Contractor**	**SECI or Owner**	
249	i	Polyurethene based coating, polyester scrim cloth, extruded HD dimpled polyurethene	As agreed / required	Critical	Review of MTC/ test reports	For each lot received at site	ASTM C-836, ASTM C898 and Tech Specs /Const. Drawings	MTC/ SR	√				
250	**b**	Roof											
251	i	Graded under bed - Slope/ Level	As agreed / required	Major	Physical	100%	Tech Specs and Construction Drawings	SR		**x**	**x**	**x**	
252	ii	Elastomaric coatings -Primer coat, Finishing coat	As agreed / required	Major	Review of MTC/ test reports	Each lot of delivery	Tech Specs and Construction Drawings	MTC/ Test Reports/ SR	√	**x**	**x**	**x**	
253	iii	Wearing Course - PCC-Grade, chicken wire mesh, elastomeric sealant	As agreed / required	Major	Visual/ Review of MTC	Each lot of delivery of material/ Review of Test Report	Tech Specs and Construction Drawings	MTC/ Test Reports SR	√	**x**	**x**	**x**	2 samples of 3 no. of test cube each shall be taken for PPC work for testing of crushing strength of concrete mix, Review of MTC for Chicken wire mesh, waterproof sealant
254	c	Acceptance of Water proofing treatment	As agreed/ required	Major	Visual/ Physical	100%	Tech Specs and Construction Drawings	SR		**x**	**x**	**x**	
256	**25**	**Water Supply and Sanitary Installations**											
257	**a**	**Water Supply Fittings and Fixtures**											
258	i	Materials - GI/ MS/ C-PVC/ uPVC/PPR/HDPE pipes and fittings	As agreed / required	Critical	Review of MTC/ test reports	Each lot of delivery as per Specifications	IS:1239, IS:4736, IS:4985, IS:6745, IS: 4984, IS:2633, IS:2629, IS:15778, IS:15801, Tech Specs and Construction Drawings	MTC/ SR	√	**x**	**x**	**x**	
259	ii	Disinfection - Before use	As agreed / required	Major	Physical	Each installation	IS:2065, Tech specs and construction Drawings	SR		**x**	**x**	**x**	
260	iii	Hydraulic test - Before use/ Leakage	As agreed / required	Critical	Physical	Each installation	Tech Specs and Construction Drawings	SR		**x**	**x**	**x**	
261	iv	Acceptance & Working	As agreed / required	Major	Physical	Random	Tech Specs and Construction Drawings	SR		**x**	**x**	**x**	
262	**b**	**Sand Cast Iron/ Cast iron Pipes**											
263	i	Material - SCI / CI pipes and fittings / joints	As agreed / required	Critical	Review of MTC/ test reports	Each lot of delivery (as applicable)	IS: 1729, IS:1536, IS:1538, Tech Specs and Construction Drawings	MTC/ SR	√	**x**	**x**	**x**	
264	ii	Acceptance and leakage	As agreed / required	Major	Physical	Random	Tech Specs and Construction Drawings	SR		**x**	**x**	**x**	
265	**c**	**HDPE Pipes for Sewerage**											
266	i	Material- HDPE pipes and fittings/ joints	As agreed/ required	Critical	Review of MTC/ test reports	Each lot of delivery (as applicable)	IS:14333, Tech. Specs	MTC/SR	√	**x**	**x**	**x**	
267	ii	Acceptance & leakage	As agreed / required	Major	Physical	Random	Tech Specs and Const. Drawings	SR		**x**	**x**	**x**	
268	**d**	**HDPE Pipes for Rain water Downcommer**											
269	i	HDPE pipes and fittings/ joints	As agreed/ required	Critical	Review of MTC/ test reports		IS:4984, Tech. Specs	MTC/SR	√	**x**	**x**	**x**	
270	ii	Acceptance & leakage	As agreed / required	Major	Physical	Random	Tech Specs and Const. Drawings	SR		**x**	**x**	**x**	
271	**e**	**Sanitary fitting and fixtures**											
272	i	Sanitory items and fixtures i.e. water closets, urinals, wash basins, sinks, mirrors, shelves, towel rail, soap containers, geyser, water cooler, etc, water supply / sanitation pipes, manhole cover and frames etc	As agreed / required	Major	Review of MTC/ Test reports	Each lot of delivery as per Specifications	Tech Specs and Const. Drawings	MTC/Test Reports/ SR	√	**x**	**x**	**x**	

	A	B	C	D	E	F	G	H	I	J	K	L	M
1	Sr.No.	Activity & Operation	Instruments	Class of Check	Type of Check	Quantum of Check	Reference Documents & Acceptance Standard	Format of Record	D* (Records identified with (√) shall be issentially included by EPC vender in QA documentation)	Cheking Agency			Remarks
2								SR - Site Register SECI-SPV-QA-F-XXX SECI-SPV-QA-T-XXX (XXX - Inspection record form No. or Test report format no.)		M'fr/ Supplier or Sub-Contractor	EPC Contractor	SECI or Owner	
273	ii	Acceptance of installations of all sanitory items and fixtures	As agreed / required	Major	Acceptance	100%	Tech Specs and Const. Drawings	SR		x	x	x	
274	f	**RCC Pipes**											
275	i	Material - RCC pipes	As agreed / required	Major	Review of MTC/ test reports	Each lot of delivery as per Specifications	IS: 458, Tech Specs and Const. Drawings	MTC/Test Reports/ SR	√	x	x	x	
276	ii	Acceptance and leakage	As agreed / required	Major	Physical	Random	Tech Specs and Const. Drawings	SR		x	x	x	
277	g	**Water Storage Tank**											
278	i	Over head / loft type	As agreed / required	Critical	Physical, review of MTC/ test reports	Each lot of delivery as per Specifications	IS:12701, Tech Specs and Const. Drawings	MTC/Test Reports/ SR	√	x	x	x	
279	ii	Aceptance and leakage	As agreed / required	Major	Acceptance	Random	IS:12701, Tech Specs and Const. Drawings	SR		x	x	x	
281	26	**Special Items (Switch Yard)**											
282	a	**Earthing Mat (Grounding System)**											
283	i	Earthing mat	As agreed / required	Critical	Physical, review of MTC/ test reports	Each lot of delivery as per Specifications	As per relevant IS and Tech. Specs / Manufacturer's, IS 3043	SR/MTC	√	x	x	x	
284	ii	Weld sizes & length	Visual/Tape	Major	Visual/ Measurement	100%	Tech Specs and Const. Drawings	SR		x	x	x	Low hydrogen electrode as per approval shall be used.
285	iii	D P test	DP test Kit	Critical	Physical	10% at random	Tech Specs and Const. Drawings	TR	√	x	x	x	
286	iv	Earth test	Earthing test kit	Critical	Physical	100%	IS:3043, Tech Specs and Const. Drawings, Relevant IS 3043	SR/ Test Report	√	x	x	x	
287	b	**Anti Weed Treatment**											
288	i	Anti-weed treatment materials	As agreed / required	Critical	Physical, review of MTC	Each batch of delivery	Tech Specs and Const. Drawings	SR/ MTC	√	x	x	x	
289	ii	Execution of treatment	As agreed / required	Major	Physical	Random check for each treatment	Tech Specs and Const. Drawings	SR		x	x	x	
291	27	**Road Work**											
292	a	**Construction of Sub-Grade and earthen/hard soulders**											
293	i	Standard proctor Test	As per IS: 2720	Critical	Physical	One in every 2000 cum for each type and source of fill materials	As per Tech Specs and Const. Drawings,Section 900 of MORTH specification, IS 2720 (Pt.VII)	SR	√	x	x	x	In cutting or existing levelled ground - quantum of check shall be one per 1000 SQM
294	ii	Moisture content of fill before compaction	As per IS: 2720	Major	Physical	One in every 2000 cum for each type and source of fill materials	As per Tech Specs and Const. Drawings, Section 900 of MORTH specification, IS 2720 (Pt.II)	SR		x	x	x	In cutting or existing levelled ground - quantum of check shall be one per 1000 SQM
295	iii	Dry density by core cutter method ---- OR---- Dry density in place by sand displacement method	As per IS: 2720	Critical	Physical	One in every 500 SQM area for each compacted layer.	As per Tech Specs and Const. Drawings, Section 900 of MORTH specification, IS 2720 (Pt. XXIX)/ IS 2720 (Pt. XXVIII)	SR	√	x	x	x	Both for embankment and cut formation quantum of check - One in every 1000 SQM area for each compacted layer.
296	iv	Lines, grade and cross section	As required / agreed	Major	Physical	One in every 500 SQM area	As per Tech Specs and Const. Drawings	SR	√	x	x	x	Template, straight edge

	A	B	C	D	E	F	G	H	I	J	K	L	M
1	**Sr.No.**	**Activity & Operation**	**Instruments**	**Class of Check**	**Type of Check**	**Quantum of Check**	**Reference Documents & Acceptance Standard**	**Format of Record**	**D*** (Records identified with (√) shall be issentially included by EPC vender in QA documentation)	**Cheking Agency**			**Remarks**
2								SR - Site Register SECI-SPV-QA-F-XXX SECI-SPV-QA-T-XXX (XXX - Inspection record form No. or Test report format no.)		**M'fr/ Supplier or Sub-Contractor**	**EPC Contractor**	**SECI or Owner**	
297	**b**	**Water Bound Macadam (Non-Bituminous) for base course and sub-base course**											
298	i	Aggregate Impact value	Agrregate Impact value Test Apparatus	Critical	Physical	One test per 200 cum of Test aggregate	As perTech Specs and Const. Drawings, Section 900 of MORTH specification	SR	√	x	x	x	
299	ii	Grading	Set of IS Sieves	Major	Physical	One test per 100 cum of aggregate	As perTech Specs and Const. Drawings, Section 900 of MORTH specification	SR		x	x	x	
300	iii	Flakiness index and elongation index	Flakiness test gauge	Major	Physical	One test per 200cun of agregate	As perTech Specs and Const. Drawings, Section 900 of MORTH specification	SR		x	x	x	
301	iv	Atterberg Limits of binding material	Atterberg limits determination	Critical	Physical	One test per 25 cum of binding material	As perTech Specs and Const. Drawings, Section 900 of MORTH specification	SR	√	x	x	x	
302	v	Atterberg Limits of portion of agreggate passing 425 micron sieve	Atterberg limits determination	Critical	Physical	One test per 100cum of aggregate	As perTech Specs and Const. Drawings, Section 900 of MORTH specification	SR	√	x	x	x	
303	vi	Camber, surface, slope	As required / agreed	Major	Physical	One in every 500 SQM area	As per Tech Specs and Const. Drawings	SR	√	x	x	x	Template, straight edge
304	**c**	**Bituminous Macadam for base and binder course**											
305	i	Quality of binder	Penetrometre with St. needle	Critical	Physical	No. of samples per Lot & tests as per IS:73, IS:217, IS:8887 as applicable	As per Tech Specs and Const. Drawings, Section 900 of MORTH specification, IS 73	SR	√	x	x	x	
306	ii	Aggregate Impact Value / Los angeles abrasion value	Aggregate Impact ValueTest apparatus	Major	Physical	Once per source	As per Tech Specs and Const. Drawings, Section 900 of MORTH specification	SR	√	x	x	x	
307	iii	Flakiness Index and elongation index of aggregates	Flakiness test gauge	Major	Physical	One test per 50 cum of aggregate	As per Tech Specs and Const. Drawings, Section 900 of MORTH specification	SR		x	x	x	
308	iv	Stripping value of aggregate (Immersion tray test)	As required / agreed	Major	Physical	Initialy one set of 3 representative specimen per source, and on every change of source.	As per Tech Specs and Const. Drawings, Section 900 of MORTH specification	SR		x	x	x	
309	v	Water sensitivity of mix	As required / agreed	Critical	Physical	Initialy one set of 3 representative specimen per source, and on every change of source.	As per Tech Specs and Const. Drawings, Section 900 of MORTH specification	SR	√	x	x	x	
310	vi	Grading of aggregates	Set of Sieves	Major	Physical	Two test per day per plant both on individual constituents and mixed aggregate from dryer	As per Tech Specs and Const. Drawings, Section 900 of MOSRTH specification	SR		x	x	x	
311	vii	Water absorption of aggregate	As required / agreed	Major		Initially one set of 3 representative specimen per source, and on every change of source.	As per Tech Specs and Const. Drawings, Section 900 of MOSRTH specification	SR		x	x	x	

	A	B	C	D	E	F	G	H	I	J	K	L	M
1	**Sr.No.**	**Activity & Operation**	**Instruments**	**Class of Check**	**Type of Check**	**Quantum of Check**	**Reference Documents & Acceptance Standard**	**Format of Record**	**D*** (Records identified with (√) shall be issentially included by EPC vender in QA documentation)	**Cheking Agency**			**Remarks**
2								SR - Site Register SECI-SPV-QA-F-XXX SECI-SPV-QA-T-XXX (XXX - Inspection record form No. or Test report format no.)		**M'fr/ Supplier or Sub-Contractor**	**EPC Contractor**	**SECI or Owner**	
312	viii	Soundness (Magnesium and Sodium Sulphate)	As required as per IS:2386	Critical	Physical	Once per source by each method and on every change of source	As per Tech Specs and Const. Drawings, Section 900 of MOSRTH specification	SR	√	x	x	x	
313	ix	Percentage of fractured faces	As required / agreed	Major	Physical	When gravel is used one test per 50cum of aggregates	As per Tech Specs and Const. Drawings, Section 900 of MOSRTH specification	SR		x	x	x	
314	x	Binder content and aggregate grading	Bitumen extractor	Critical	Physical	Periodic, subject to a min of two tests per day per plant	As per Tech Specs and Const. Drawings, Section 900 of MORTH specification	SR	√	x	x	x	
315	xi	Control of Temperature of binder and aggregate for mixing and of the mix at the time of laying and rolling	Thermometer	Major	Physical	At regular close intervals	As per Tech Specs and Const. Drawings, Section 900 of MORTH specification	SR		x	x	x	
316	xii	Rate of spread of mixed materials	As required / agreed	Major	Physical	Regular control through checks of layer thickness	As per Tech Specs and Const. Drawings, Section 900 of MORTH specification	SR		x	x	x	
317	xii	Density of compacted Layer	As required / agreed	Critical	Physical	One test per 250 sqm of area	As per Tech Specs and Const. Drawings, Section 900 of MORTH specification	SR	√	x	x	x	
318	**c**	**Bituminous Surfacing - Open graded premix carpet and Seal coat**											
319	i	Quality of binder	Penetrometre with St. needle	Critical	Physical	No. of samples per Lot & tests as per IS:73, IS:217, IS:8887 as applicable	IS 73,Tech Specs and Const. Drawings, Section 900 of MORTH specification	SR	√	x	x	x	
320	ii	Aggregate Impact Value / Los angeles abrasion value	Aggregate Impact ValueTest apparatus	Major	Physical	One test per 50 cum of aggregate	As per Tech Specs and Const. Drawings, Section 900 of MORTH specification	SR	√	x	x	x	
321	iii	Flakiness Index and elongation indexof aggregates	Flakiness test gauge	Major	Physical	One test per 50 cum of aggregate	As per Tech Specs and Const. Drawings, Section 900 of MORTH specification	SR		x	x	x	
322	iv	Stripping value of aggregate (Immersion tray test)	As required / agreed	Major	Physical	Initialy one set of 3 representative specimen per source, and on every change of source.	As per Tech Specs and Const. Drawings, Section 900 of MORTH specification	SR	√	x	x	x	
323	v	Water absorption test		Critical	Physical	Initialy one set of 3 representative specimen per source, and on every change of source.	As per Tech Specs and Const. Drawings, Section 900 of MORTH specification	SR	√	x	x	x	
324	vi	Water sensitivity of mix	As required / agreed	Critical	Physical	Initialy one set of 3 representative specimen per source, and on every change of source.	As per Tech Specs and Const. Drawings, Section 900 of MORTH specification	SR	√	x	x	x	
325	vii	Grading of aggregates	Set of Sieves	Major	Physical	One test per 25 cum of aggregates	As per Tech Specs and Const. Drawings, Section 900 of MORTH specification	SR	√	x	x	x	

	A	B	C	D	E	F	G	H	I	J	K	L	M
1	**Sr.No.**	**Activity & Operation**	**Instruments**	**Class of Check**	**Type of Check**	**Quantum of Check**	**Reference Documents & Acceptance Standard**	**Format of Record**	**D*** (Records identified with (√) shall be issentially included by EPC vender in QA documentation)	**Cheking Agency**			**Remarks**
2								SR - Site Register SECI-SPV-QA-F-XXX SECI-SPV-QA-T-XXX (XXX - Inspection record form No. or Test report format no.)		**M'fr/ Supplier or Sub-Contractor**	**EPC Contractor**	**SECI or Owner**	
326	viii	Soundness (Magnesium and Sodium Sulphate)	As required as per IS:2386	Critical	Physical	Once per source by each method and on every change of source	As per Tech Specs and Const. Drawings, Section 900 of MORTH specification	SR	√	x	x	x	
327	ix	Polished stone value	As required as per BS:812(Part 114)	Major	Physical	As required	As per Tech Specs and Const. Drawings, Section 900 of MORTH specification	SR		x	x	x	
328	x	Temperature of binder at application	Thermometer	Major	Physical	At regular close intervals	As per Tech Specs and Const. Drawings, Section 900 of MORTH specification	SR		x	x	x	
329	xi	Binder content	Bitumen extractor	Critical	Physical	One test per 500 cum& not less than two tests per day	As per Tech Specs and Const. Drawings, Section 900 of MORTH specification	SR	√	x	x	x	
330	xii	Rate of spread of materials	As required / agreed	Major	Physical	One test per 500 cum and not less than 2 tests per day	As per Tech Specs and Const. Drawings, Section 900 of MORTH specification	SR		x	x	x	
331	xiii	Percentage of fractured faces	Bitumen extractor	Critical	Physical	When gravel is used one test per 50cum of aggregates	As per Tech Specs and Const. Drawings, Section 900 of MORTH specification	SR	√	x	x	x	
332	**d**	**Tack Coat/ Prime coat/ fog coat**											
333	i	Quality of binder	Penetrometre with Standard needle	Critical	Physical	No. of samples per Lot & tests as per IS:73, IS:217, IS:8887 as applicable	IS 73,Tech Specs and Const. Drawings, Section 900 of MORTH specification	SR	√	x	x	x	
334	ii	Temperature of binder at application	Thermometer	Major	Physical	At regular close intervals	As per Tech Specs and Const. Drawings, Section 900 of MORTH specification	SR		x	x	x	
335	iii	Rate of spread of binder	As required / agreed	Major	Physical	One test per 500 cum and not less than 2 tests per day	As per Tech Specs and Const. Drawings, Section 900 of MORTH specification	SR		x	x	x	
336	**e**	**Alignment, Level, Surface regularity and rectification**											
337	i	Horizontal alignment, Surface levels and Surface regularity	As required / agreed	Major	Physical	At Random	As per Tech Specs and Const. Drawings, Section 900 of MORTH specification	SR	√	x	x	x	
338	ii	Rectification	As required / agreed	Major	Physical	Each rectification	As per Tech Specs and Const. Drawings, Section 900 of MORTH specification	SR		x	x	x	
340	**28**	**Geotechnical Investigations**											
341	i	Deployment of approved Geotechnical Investigation Agency - Equipments, Manpower etc	As required / agreed	Critical	Physical	Once before commencement of work	As per technical specifications and relevant IS Codes	SR	√	x	x	x	
342	ii	Execution of Geotechnical Investigation - locations, type etc as per scheme	As required / agreed	Major	Physical	Each Location	As per technical specifications and relevant IS Codes	SR		x	x	x	
343	iii	Collection of disturbed and undisturbed samples , their packing and storage	As required / agreed	Major	Physical	each sampling	As per technical specifications and relevant IS Codes	SR		x	x	x	
344	iv	Conducting filed tests as per investigation scheme- such as, SPT/ERT/SCPT/PLT/PMT etc	As required / agreed	Major	Physical	each field test	As per technical specifications and relevant IS Codes	SR		x	x	x	

	A	B	C	D	E	F	G	H	I	J	K	L	M
1	**Sr.No.**	**Activity & Operation**	**Instruments**	**Class of Check**	**Type of Check**	**Quantum of Check**	**Reference Documents & Acceptance Standard**	**Format of Record**	**D*** (Records identified with (√) shall be issentially included by EPC vender in QA documentation)	**Cheking Agency**			**Remarks**
2								SR - Site Register SECI-SPV-QA-F-XXX SECI-SPV-QA-T-XXX (XXX - Inspection record form No. or Test report format no.)		**M'fr/ Supplier or Sub-Contractor**	**EPC Contractor**	**SECI or Owner**	
345	v	Submittion of Field Borelogs in approved format	As required / agreed	Major	Review	Within 24 hours after completion of each BH	As per technical specifications and relevant IS Codes	SR		x	x	x	
346	vi	Submittion of laboratory test schedule and selection of samples for laboratory testing	As required / agreed	Critical	Review and acceptance	as per consultation with engineer during dispatch of samples to approved laboratory	As per technical specifications and relevant IS Codes	SR	√	x	x	x	
347	vii	Submission of Final Geotechnical investigation report along with recommendations	As required / agreed	Critical	Physical	After completion of investigation work and review of draft reports	As per technical specifications and relevant IS Codes	SR		x	x	x	
349	**29**	**Topographical Survey Works**											
350	i	Deployment of approved Topographical Surveying Agency - Equipments, Manpower etc	As required / agreed	Critical	Physical	Once before commencement of work	As per technical specifications and relevant IS Codes	SR	√	x	x	x	
351	ii	Transfer of Permanent Bench mark to site from known location	As required / agreed	Major	Physical	Before commencement of work	As per technical specifications and relevant IS Codes	SR		x	x	x	
352	iii	Establishment of boundary pillers and survey grid, Temporary bench Marks, Measurement & recording spot levels	As required / agreed	Major	Physical		As per technical specifications and relevant IS Codes	SR		x	x	x	
353	iv	Recording features like trees, roads, transmission lines, lake, nala, river, temple, house, culverts etc. with coordinate locations	As required / agreed	Major	Physical		As per technical specifications and relevant IS Codes	SR		x	x	x	
354	vi	Submission of final Counter map showing all topographical features, record of spot levels	As required / agreed	Critical	Physical	After completion of investigation work and review of draft reports	As per technical specifications and relevant IS Codes	SR	√	x	x	x	
356	**30**	**Internal Switchyard - Site Leveling & Grading**											
357	i	Leveling Switchyard area	As required / agreed	Major	Visual / Physical	100%	As perTech. Specification and Approved Drawing	SR		x	x	x	
358	ii	Grading of 20/40mm stone / Gravel Spreading in sitchyard area	As required / agreed	Major	Physical	100%	As per Tech. Specification & Approved Drawing	SR		x	x	x	
360	**31**	**Plant Boundary Fencing (if applicable) & Gate (Also refer S.No. 3 for Steel works as applicable)**											
361	i	Fence posts (Intermediate, Stay & Corner Posts etc.) - Section size, Length, Galvanization - Grade/ Thickness, Tensile strength etc.	As agreed/ Required	Critical	Physical/ Measurement/ Review of MTC	Each lot received at site Random	IS:226; IS:2721; IS:278; IS:480; IS:4826 , Tech. Specs & Construction Drawings	MTC/ SR	√	x	x	x	For Structural steel checks refer S.No. 3
362	ii	Barbed wire - Dia. of line wire and barb wire, Grade of galvanization etc, Tensile strength etc.	As agreed/ Required	Critical	Physical/ Measurement/ Review of MTC				√	x	x	x	
363	iii	Tie wire - Diameter, Galvanization- Grade, tensile strength etc.	As agreed/ Required	Critical	Physical/ Measurement/				√	x	x	x	
364	iv	Blade barbed/ Concertina Wire - Thickness/ Diameter, galvanization, Diameter of concertina coil, Tensile strength etc.	As agreed/ Required	Critical	Physical/ Measurement/ Review of MTC				√	x	x	x	

	A	B	C	D	E	F	G	H	I	J	K	L	M
1	**Sr.No.**	**Activity & Operation**	**Instruments**	**Class of Check**	**Type of Check**	**Quantum of Check**	**Reference Documents & Acceptance Standard**	**Format of Record**	**D*** (Records identified with (√) shall be issentially included by EPC vender in QA documentation)	**Cheking Agency**			**Remarks**
2								SR - Site Register SECI-SPV-QA-F-XXX SECI-SPV-QA-T-XXX (XXX - Inspection record form No. or Test report format no.)		**M'fr/ Supplier or Sub-Contractor**	**EPC Contractor**	**SECI or Owner**	
365	v	Fence Fabric- Mesh size, Wire Diameter, Galvanization-Grade, Selvage, Knuckling, Tensile strength etc.	As agreed/ Required	Critical	Physical/ Measurement/ Review of MTC				√	x	x	x	
366	vi	MS Gate - Caster weels, ball & bearings, Fixtures & fasteners etc.	As agreed/ Required	Major	Visual	100%	Tech. Specs & Construction Drawings	SR		x	x	x	
367	vi	Acceptance of Boundary Fence and gate	As agreed/ Required	Major	Physical	100%	Tech. Specs & Construction Drawings	SR		x	x	x	
369	**32**	**Tranformer Yard Fencing & Gate (Also refer S.No. 3 for Steel Works as applicable)**											
370	i	Fence posts (Intermediate, Stay & Corner Posts), Concertina Wire Support Angles - Section size, Length, Galvanization, Tensile strength etc.	As agreed/ Required	Critical	Physical/ Measurement/ Review of MTC	Each lot received at site Random	IS-226; IS 2721; IS-4948 , IS:480; IS:4826 Tech. Specification and Approved Drawing	MTC/ SR	√	x	x	x	For structural steel checks refer S.No. 3
371	ii	Tie wire (as aplicable) - Diameter, Galvanization, Tensile strength etc.	As agreed/ Required	Critical	Physical/ Measurement/ Review of MTC				√	x	x	x	
372	iii	Fence Fabric (chain link/ welded wire as aplicable)- Mesh size, Wire Diameter, Galvanization, Selvage, Knuckling, Tensile strength etc.	As agreed/ Required	Critical	Physical/ Measurement/ Review of MTC				√	x	x	x	
373	iv	MS Gate - Fixtures and fasteners	As agreed/ Required	Major	Visual	100%	Tech Specs andAproved Drawings	SR		x	x	x	
374	v	Acceptance of Fence & Gate	As agreed/ Required	Major	Physical	100%	Tech Specs and Approved Drawings	SR		x	x	x	
376	**33**	**Installation of Pre Engineered Building (PEB) - Security Cabin**											
377	**a**	**Receipt**											
378	i	Receipt of materials and Checking as per packing list	As agreed/ Required	Major	Visual	100%	As per Approved Drawings & Method Statement, Relevant BIS standards	SR	√	x	x	x	
379	iii	Dimensional Check	As agreed/ Required	Major	Measurement	100%			√	x	x	x	
380	iv	Visual checks for damages, rusting, pitting etc.	As agreed/ Required	Major	Visual	100%				x	x	x	
381	v	Visual checks for defects, primer coating and painting/galvanising as applicable.	As agreed/ Required	Major	Visual	100%				x	x	x	
382	vi	Nut/Bolt/Washers Checks	As agreed/ Required	Major	Visual	100%				x	x	x	
383	**b**	**Pre-Installation**											
384	i	Check that the work area is ready and safe to start installation	As agreed/ Required	Major	Visual / Dimension					x	x	x	
385	ii	Check readiness of Foundations	As agreed/ Required	Major		100%				x	x	x	
386	**c**	**Installation (as aplicable)**											
387	i	Readyness of concrete platform, foundations for installation- Size, Location, Level etc.	As agreed/ Required	Major	Visual					x	x	x	
388	ii	Check PUF side walls/ roof are installed properly	As agreed/ Required	Major	Physical					x	x	x	
389	iii	Check tightening of all Nut/Washers/Bolts	As agreed/ Required	Major	Physical					x	x	x	
391	**34**	**Structural Work for Module Mounting Structure (MMS)**					Tech. Specification, Approved Drawing & Method Statement						
437	a	**Manufacturing**											

	A	B	C	D	E	F	G	H	I	J	K	L	M
1	Sr.No.	Activity & Operation	Instruments	Class of Check	Type of Check	Quantum of Check	Reference Documents & Acceptance Standard	Format of Record	D* (Records identified with (√) shall be issentially included by EPC vender in QA documentation)	Cheking Agency			Remarks
2								SR - Site Register SECI-SPV-QA-F-XXX SECI-SPV-QA-T-XXX (XXX - Inspection record form No. or Test report format no.)		M'fr/ Supplier or Sub-Contractor	EPC Contractor	SECI or Owner	
438		**Strucural Steel (Raw Material)** Hot rolled & cold formed sections - Angle, Channel, Z-section, Box section, Plate, rod & bar											
439	i	Ultimate Tensile Strength (UTS), Yield Strength (YS), Percentage Elongation, Bend Test, Chemical Composition, Section dimensions	As agreed/ Required	Critical	Chemical composition, Mechanical, Measurement	1 Sample per 50 MT or part thereoff/ for every heat no.	IS 2062, IS 513, IS 811, IS 1079, IS 808, IS 1852, IS 1730 -Part I	MTC	√				Raw material to be procured from reputed manufacturers - like SAIL, RINL, JSPL, JSW, TISCO, ISSAR
440	ii	Visual Examination - Cracks, Scaling, Rust, Pitting, Lamination etc.	As agreed/ Required	Major	Visual	10% IS 2500, Level II, AQL 1.5	IS 2062, IS 513, IS 811, IS 1079, IS 808, IS 1852, IS 1730-Part I	SR	√	x	x	x	Material shall be free from surface defects like cracks, lamination,roughness, imperfect edges, rust, pitting & other harmful defects. Removal of minor surface defects as per IS;2062 is acceptable. Witness for 10% sample. Record review for every material
441		**Boughtout Items (Hardware - Nuts, Bolts and Washers - plain, spring)**											
442	i	Mechanical & Chemical Properties	As agreed/ Required	Critical	Chemical composition, Mechanical	1 sample per 5 MT or part thereoff	IS 1327 (Part 17) eq./ ASTM standard	MTC/ Lab test Report	√	x	x	x	
443	ii	Dimensional check (Dia., Thickness, Total stem length & Threaded length etc.)	As agreed/ Required	Major	Measurement	IS 1327 (part 17) eq 10 pieces per lot per member type	IS 6639, IS 2016,IS 6610 & IS 3063 / ASTM standard	Vendor Records	√	x	x	x	Witness for sample. Record review for every material
444	iii	Galvanizing - Mass per Sqm, Thickness (DFT)	As agreed/ Required Alcometer	Major	Visual, Measurement	IS 1327 (part 17) eq 10 pieces per lot per member type	For Hot dip galvanizing should be maintained 43 microns (min) and average 54 microns as per IS 1367 (part XIII) eq.	Vendor Records	√	x	x	x	Record review Random sample inspection/ measurement
445	b	**In Process Inspection**											
446		**Structural Item Fabrication**											
447	i	Straightening	As agreed/ Required	Major	Visual	100%	0.2% of total length	Vendor Records	√	x	x	x	Record review
448	ii	Cropping (Cutting)	As agreed/ Required	Major	Visual	100%	Approved drawing	Vendor Records	√	x	x	x	Record review
449	iii	Identification/ Marking	As agreed/ Required	Major	Visual	100%	Approved drawing Marking Shall be done with the help of permanent paint marker using stencil as per Drawing	Vendor Records	√	x	x	x	Record review Random sample inspection
450	iv	Punching/ Drilling of Holes	As agreed/ Required	Critical	Measurement	1 piece per 25 pieces	IS 802/ Approved drawing	Vendor Records	√	x	x	x	Record review
451		Edge Security							√	x	x	x	
452	v	Overall Length	As agreed/ Required	Major	Measurement	1 piece per 25 pieces	IS 802/ Approved drawing	Vendor Records	√	x	x	x	Record review Random sample measureemnt
453	vi	Bending	As agreed/ Required	Critical	Measurement	100%	IS 801, 811/ Approved drawing	Vendor Records	√	x	x	x	
454		Cross Section Dimensions							√	x	x	x	Record review
455	vii	Welding	As agreed/ Required	Major	Visual	100%	Approved Welding Procedure & Welder Qualification	Vendor Records	√	x	x	x	Record review Random sample ispection
456	viii	Visual Examination - Black spots, Porosity, Spatter, Rust bleed points, Weld dimensions	As agreed/ Required	major	Visual	100%	Tech. Specification, Approved Drawing	Vendor Records	√	x	x	x	Record review Raddom sample inspection (The fabricated material shall be free from
457	ix	DP Test (as necessary)	As agreed/ Required	Major	Chemical	Shift wise/ random	As and when required	Vendor Records	√	x	x	x	
458	x	Final Inspection of Fabricated Parts - Cross section dimensions, Thickness (before galvanization)	As agreed/ Required	Critical		10 % in lot size of 100 nos.	IS- 802, IS 807, IS 811 and relevant applicable eq. standards , approved drawings, Tech spec	Vendor Records	√	x	x	x	
459		**Galvanizing**											
460	i	Zinc - Ingot, Molten metal in galvanizing bath	As agreed/ Required	Critical	Chemical	1 sample from each batch of ingot supply	IS 2629	MTC Lab test report	√	x	x	x	Purity of Zn 98.5%, MTC to be correlated. Molten metal in the galvanizing bath ≥ 98.5 % by mass of zinc.
461		**Pre Galvanizing**											

	A	B	C	D	E	F	G	H	I	J	K	L	M
1	Sr.No.	Activity & Operation	Instruments	Class of Check	Type of Check	Quantum of Check	Reference Documents & Acceptance Standard	Format of Record	D* (Records identified with (√) shall be issentially included by EPC vender in QA documentation)	Cheking Agency			Remarks
2								SR - Site Register SECI-SPV-QA-F-XXX SECI-SPV-QA-T-XXX (XXX - Inspection record form No. or Test report format no.)		M'fr/ Supplier or Sub-Contractor	EPC Contractor	SECI or Owner	
462	i	Degreasing	Acid base cold degreaser	Major	Chemical	One sample daily	Sp. Gravity 1.1 to 1.2, ph Value 2 to 3	Vendor Records	√	x	x	x	Record review
463	ii	Pickling - Acid & Iron content	Lab test	Major	Chemical	One sample daily	Acid Content-Concentration 18% to 4% min, Sp. Gravity 1 to 1.3 Iron Content -120g/litre (max)	Vendor Records	√	x	x	x	Record review
464	iii	Rinsing	pH meter	Major	Chemical	One sample daily	Rinsing water ph value 5 to 7	Vendor Records	√	x	x	x	Record review
465	iv	Pre-fluxing in ZnCl solution - Specific gravity, pH	pH meter	Major	Measurement	One sample daily	Sp Gr - 1.10 to 1.26 pH - 3 to 5	Vendor Records	√	x	x	x	Record review
466	v	Pre-heating	Pyrometer	Major	Measurement	One sample daily	Above 50^0 C	Vendor Records	√	x	x	x	Record review
467	vi	Dipping - Zinc bath temperature, Imersion & withdrawl time	Continuous recording & verification by Pyrometer	Major	Measurement	Hourly check	Zn bath temp - 440^0 C to 460^0 C Article to be immersed till reaction	Vendor Records	√	x	x	x	Record review
468	vii	Quenching	Plain water	Minor			Bath in plain water for cooling & Cleaning. Temp. Below 65°	Vendor Records	√	x	x	x	Record review
469	viii	Di-chromating	Di-chromate solution	Major	Chemical	One sample daily	strength of the solution to be maintained as 0.7 to 1% of sodium dichromate, temperature of solution should be less than 65°	Vendor Records	√	x	x	x	Record review
470		**Post Galvanizing**											
471	i	Surface Defects/Finish - Dross, Pimples, Black marks, Ash deposition	As agreed/ Required	Major	Visual	100%	IS 2633	Vendor Records	√	x	x	x	Record review Random samples to be inspected during
472	ii	Thickness of Zinc Coating	Alcometer	Critical	Measurement	3 samples per dip	As Per IS 4759 , 6745 , Minimum 80micron or as per spec.	Vendor Records	√	x	x	x	Record review Random samples to be measured during factory visit by Owner/PMC
473	iii	Mass of Zinc Coating		Critical	Chemical	1 sample per shift	As Per IS 6745	Vendor Records	√	x	x	x	Record review
474	iv	Uniformity of Zinc Coating (Preece Test)		Major	Chemical	1 sample per shift	No red stains after 4 dippings	Vendor Records	√	x	x	x	Record review/ Sample test if deemed necessary
475	v	Adhesion of Zinc Coating (Pivote Hammer Test/ Knife Test)		Major	Physical	1 sample per hour	No Removal or lifting in areas between hammer impression/coating should not peel off. As per IS 2629	Vendor Records	√	x	x	x	Record review Random samples to be inspected during factory visit by Owner/PMC. Sample test if deemed necessary
476		**Proto Assembly**											
477	i	Proto Assembly check - Fitment, Dimensions, Alignment, Overall Stability	Prototype of one mounting table with	Critical	Physical/ Measureemnt	100%	Cut lengths of all members, Fitment (dia. of holes, end security, c/c distance between holes etc. shall be checked for correctness wrt permissible tolerence through in postion ispection of assembled proto), Fasteners (bolts, nuts and washers), Cleats, Gussete plates shall be as per Approved drawing/ specifications. The proto assembly shall be checked for overall stability for design verification of various conenctions and col. support system.	IR	√	x	x	x	The general quality of fabrication and galvanization of members, straightness of members, overall stability of prototype etc. shall be checked for design verification. Any suggestions for design changes etc. shall be properly recorded in the inspection report for implimentation in mass production of MMS members
478		**Marking/ Packaging**											
479	i	Marking	As agreed/ Required	Major	Visual	100%	Aprroved drawing/ marking scheme	IR	√	x	x	x	Record review Random sample shall be checked during facroty visit by Vendor and SECI/ Owner representative

	A	B	C	D	E	F	G	H	I	J	K	L	M
1	**Sr.No.**	**Activity & Operation**	**Instruments**	**Class of Check**	**Type of Check**	**Quantum of Check**	**Reference Documents & Acceptance Standard**	**Format of Record**	**D*** (Records identified with (√) shall be issentially included by EPC vender in QA documentation)	**Cheking Agency**			**Remarks**
2								SR - Site Register SECI-SPV-QA-F-XXX SECI-SPV-QA-T-XXX (XXX - Inspection record form No. or Test report format no.)		**M'fr/ Supplier or Sub-Contractor**	**EPC Contractor**	**SECI or Owner**	
480	ii	Packaging, Storing, Bundling, Handling	As agreed/ Required	Major	Visual	100%	As per IS-802. Packing of Column. Bracing, Rafters and Purlins shall be done by strapping. Packing of smaller items by wires or in gunny bags/ or as per approved procedure	IR	√	x	x	x	Separate packaging for different type of members like Col, Purlin, Rafter, Front/ rear/ diagonal bracings, fasteners, cleats etc. Small members shall be bundled with wire. Damage to galvanization and form (shape) of the member during handling and trasporting shall be controlled
481		**Site Installation**								x	x	x	
482	i	Receipt of materials and Checking as per packing list	As agreed/ Required	Critical	Visual	Random	Tech. Specification, Approved Drawing & Method Statement.		√	x	x	x	
483	ii	Fabricated members - Dimensional Check	As agreed/ Required	Major	Visual	100%				x	x	x	
484	iii	Visual checks for defects/damages, rusting, pitting, galvanising etc.	As agreed/ Required	Major	Visual	Random				x	x	x	
485	iv	Nut/Bolt/Washers	As agreed/ Required	Major	Measurement	100%				x	x	x	
486	v	Mounting of structures & Accessories - Coordinates, Levels, Fitment, Alignment etc.	As agreed/ Required	Critical	Visual /Measurement	100%			√	x	x	x	
487	vi	Torque Checking - Daily calibration check, Bolt installation	As agreed/ Required	Major	Measurement	100%				x	x	x	
489	**35**	**Module Mouting - Pre Installation Check**			Visual	100%							
490	i	Check for site physical layout as per drawing / Design Specification		Major	Physical	100%				x	x	x	
491	ii	Check for Structure, Mounting readiness		Major	Physical					x	x	x	
493	**36**	**String Combiner Boxes (SCB) - Mouting - Pre Installation Check**											
494	i	Check for foundation readyness - location & coordinates, dimensions & levels, foundation bolts etc.		Major	Physical	100%				x	x	x	
496	**37**	**Inverter Panel**					Design Specification, Drawings, Manufacturer Manual Method Statement	SR					
497		**Pre Installation**											
498	i	Check for site physical layout as per drawing.		Major	Visual	100%			√	x	x	x	
499	ii	Ensure that no fouling with civil/structural		Major	Physical	Random				x	x	x	
500	iii	Check for Foundation readiness and level of foundation.		Major	Physical	100%				x	x	x	
502	**38**	**Burried Cables**					Design Specification, Drawings, Manufacturer Catalogue Method Statement (SW-SEPC-MS-CAB-006)						
503	i	Cable Trench - Dimensions, alignment		Critical	Physical	100%	Design Specification, Drawings, Manufacturer Catalogue Method Statement	SR		x	x	x	
504	ii	Sand filling before cable laying, sand filling after cable laying, placing of precast concrete slabs/ bricks, backfilling with soil		Major	Visual	100%				x	x	x	
586													
587													
588													
589													
590													
591													

	A	B	C	D	E	F	G	H	I	J	K	L	M
1	**Sr.No.**	**Activity & Operation**	**Instruments**	**Class of Check**	**Type of Check**	**Quantum of Check**	**Reference Documents & Acceptance Standard**	**Format of Record**	**D*** (Records identified with (√) shall be issentially included by EPC vender in QA documentation)	**Cheking Agency**			**Remarks**
2								SR - Site Register SECI-SPV-QA-F-XXX SECI-SPV-QA-T-XXX (XXX - Inspection record form No. or Test report format no.)		**M'fr/ Supplier or Sub-Contractor**	**EPC Contractor**	**SECI or Owner**	
592			**LEGEND**: D * Records, indentified with "Tick" (√) shall be essentially included by supplier in QA documentation.							**DOC. NO.**: SECI - XXX - XXX -XXX - FQP & MQP - 001			**REV**: 0
593			**Legend to be used:**										
594			**Class # : A** = Critical, **B**=Major, **C**=Minor										
595			**Format of Record #** : **SR**=Site Register, **TR**=Lab Test Report, **IR**=Inspection Report, **MTC**=Manufacturer's Test Certificate										
596			All **MTC'**s shall be correlated with batch of material supply, Tech specs and drawings										
597			**Category 'A'** - Sub-contractor/ sub-vendor, EPC Vendor, SECI/ Owner										
598			**Category 'B'** - Sub-Contractor/ Sub-Vendor, EPC Vendor, SECI										
599			**Category 'C'** - Sub-Contractor/ Sub-Vendor										
600										**Reviewed By**	**Approved By**		**Approval Seal**
601			This document shall be read in conjunction with Tech. Specifications and Drawings										

BHEL PROPOSAL ON INDICATIVE FQP BY SECI				
SL. NO.	**SL. NO. AS PER SECI INDICATIVE FQP**	**AS PER SECI INDICATIVE FQP**	**PROPOSAL BY BHEL**	**MUTUALLY AGREED AS PER DISCUSSION DATED 04.04.2019**
1	Sl. No. 3, A (i to iv),			
	Quantum of check	One test at lab to corelate with MTC.	Review of MTC only	Review of MTC with lab test results of design mix
	Format of Record	Manufacturers Test Certificate (MTC's) and Laboratory Test results	Manufacturers Test Certificate (MTC's)	Review of MTC with lab test results of design mix
	Remarks	Each consignment/ lot of cement shall be duly correlated with MTC If cement stored is more than 60 days in godown the same shall be re-tested for conformation with MTC	Each consignment/ lot of cement shall be duly correlated with MTC If cement stored is more than **90** days in godown the same shall be tested for conformation with MTC	FQP Clause shall prevail
2	Sl. No. 3, B (i to vii),			
	Quantum of check	Once per 100 cum or part thereof (During monsoon moisture content to be checked every day)	Once per source	Agreed
	Remarks	Water content of concrete to be corrected as per results of moisture content	Not applicable	Agreed
3	Sl. No. 3, C (i to iv),			
	Quantum of check	Gradation - Once per 1000 cum or part there of Mosture content - Every day	Once per source	Agreed
	Remarks	Water content of concrete to be corrected as per results of moisture content	Not applicable	Agreed
4	Sl. No. 3, E, Bricks (i to iv),			
	Quantum of check	As per relevant IS code/ one sample for 30,000 nos. or part there of	As per relevant IS code/ one sample for **each source**	As per relevant IS code/ one sample for 40,000 nos./ minimum one test per building or part there of
5	Sl. No. 3, E, Water (i and ii),			
	Quantum of check	One per 3 months for each source	One per each source	One per borewell and source
6	Sl. No. 9, i, Page 5 of 21			
	Quantum of check	At the time of concrete pouring at site every 2 hrs	As required	Agreed
7	Sl. No. 9, ii, Page 5 of 21			
	Remarks	**MMS Pile** - 6 cubes (3 for 7 day test & 3 for 28 day strength) per sample for each 5 cum or part there off. **Building work and Equipment/ Misc foundations etc.** - 6 cubes (3 for 7 day test & 3 for 28 day strength) per sample for each 25 cum or part there off	**MMS Pile** - 6 cubes (3 for 7 day test & 3 for 28 day strength) per sample for **each day**. **Building work and Equipment/ Misc foundations etc.** - 6 cubes (3 for 7 day test & 3 for 28 day strength) per sample for each 25 cum or part there off	**MMS Pile** - 6 cubes (3 for 7 day test & 3 for 28 day strength) per sample for each 10 cum or part there off with minimum one sample per day **Building work and Equipment/ Misc foundations etc.** - 6 cubes (3 for 7 day test & 3 for 28 day strength) per sample for each 25 cum or part there off with minimum one sample per day
8	Sl. No. 12, iv, Page 6 of 21			

BHEL PROPOSAL ON INDICATIVE FQP BY SECI				
SL. NO.	**SL. NO. AS PER SECI INDICATIVE FQP**	**AS PER SECI INDICATIVE FQP**	**PROPOSAL BY BHEL**	**MUTUALLY AGREED AS PER DISCUSSION DATED 04.04.2019**
	Quantum of check	(i) For foundation fill/ backfill - One for every 10 foundations at Random for each compacted layer (ii) For area grading/ filling - one every 1000 sqm area for each compacted layer	(i) For foundation fill/ backfill - One for every **20** foundations at Random for each compacted layer (ii) For area grading/ filling - one every **2000** sqm area for each compacted layer	(i) For foundation fill/ backfill - One for every **20** foundations/ minimum of one foundation per building at Random for each compacted layer (ii) For area grading/ filling (building works) - one every **1000** sqm area/ one test per building for each compacted area (ii. A) For MMS works - one every 2000 sqm area for each compacted area
9	Sl. No. 15, ix, Page 7 of 21			
	Quantum of check	One sample for every 20 Cum of concreting or part thereof for each days concreting (one sample consists of min 3 test cubes for 28 days strength)	One sample for every **25** Cum of concreting or part thereof for each days concreting (one sample consists of min 3 test cubes for 28 days strength)	Agreed
10	Sl. No. 27, a, i, Page 12 of 21			
	Quantum of check	One in every 2000 cum for each type and source of fill materials	One in every **source** for each type and source of fill materials	Agreed
11	Sl. No. 27, a, ii, Page 12 of 21			
	Quantum of check	One in every 2000 cum for each type and source of fill materials	One in every **source** for each type and source of fill materials	Agreed
12	Sl. No. 27, a, iii, Page 12 of 21			
	Quantum of check	One in every 500 SQM area for each compacted layer.	One in every **1000** SQM area for each compacted layer.	Agreed
13	Sl. No. 27, a, iv, Page 12 of 21			
	Quantum of check	One in every 500 SQM area	One in every **1000** SQM area	FQP Clause shall prevail
14	Sl. No. 27, b, i, Page 13 of 21			
	Quantum of check	One test per 200 cum of Test aggregate	One test per **each source**	Agreed
15	Sl. No. 27, b, ii, Page 13 of 21			
	Quantum of check	One test per 100 cum of aggregate	One test per **each source**	Agreed
16	Sl. No. 27, b, iii, Page 13 of 21			
	Quantum of check	One test per 200cun of agregate	One test per **each source**	Agreed
17	Sl. No. 27, b, iv, Page 13 of 21			
	Quantum of check	One test per 25 cum of binding material	One test per **each source**	Agreed
18	Sl. No. 27, b, v, Page 13 of 21			
	Quantum of check	One test per 100cum of aggregate	One test per **each source**	Agreed
19	Sl. No. 27, b, vi, Page 13 of 21			
	Quantum of check	One in every 500 SQM area	One in every **1000** SQM area	Agreed
20	Sl. No. 27, c, iii, Page 13 of 21			
	Quantum of check	One test per 50 cum of aggregate	One test per **each source**	Agreed
21	Sl. No. 27, c, ix, Page 14 of 21			
	Quantum of check	When gravel is used one test per 50cum of aggregates	When gravel is used one test per **each source** of aggregates	Agreed
22	Sl. No. 27, c, xii, Page 14 of 21			

BHEL PROPOSAL ON INDICATIVE FQP BY SECI				
SL. NO.	**SL. NO. AS PER SECI INDICATIVE FQP**	**AS PER SECI INDICATIVE FQP**	**PROPOSAL BY BHEL**	**MUTUALLY AGREED AS PER DISCUSSION DATED 04.04.2019**
	Quantum of check	One test per 250 sqm of area	One test per **1000** sqm of area	Agreed
23	Sl. No. 27, c bituminous surfacing, ii, Page 14 of 21			
	Quantum of check	One test per 50 cum of aggregate	One test per **each source** of aggregate	Agreed
24	Sl. No. 27, c bituminous surfacing, iii, Page 14 of 21			
	Quantum of check	One test per 50 cum of aggregate	One test per **each source** of aggregate	Agreed
25	Sl. No. 27, c bituminous surfacing, vii, Page 14 of 21			
	Quantum of check	One test per 25 cum of aggregates	One test per **each source** of aggregates	Agreed
26	Sl. No. 27, c bituminous surfacing, xiii, Page 15 of 21			
	Quantum of check	When gravel is used one test per 50cum of aggregates	When gravel is used one test per **each source** of aggregates	Agreed
27	Sl. No. 28, v, Page 16 of 21			
	Quantum of check	Within 24 hours after completion of each BH	Along with geotechnical report.	Agreed

BORED CAST-IN -SITU PILES
METHODOLOGY
(Tractor Mounted Rig (OR) DTH)

1.0 General

This method statement describes the general information on the installation of bored cast-in-situ piles.

2.0 Pile Execution

2.1 Survey marks controlling the location of the pile shall be set out and approved beforehand.

2.2 A reasonable firm and level working platform is required for the bored piling rig.

2.3 Rotary Rig & Drilling

The pile boring shall be carried out by means of tractor mounted rig. The base equipment consists of a rotary table which imparts a rotary movement to drilling rod which can be extended up to the required level and bottom of which is attached by a drilling tool. When the machine has been positioned accurately with the drilling tool over the pile position, the tool is rotated and lowered into the ground .As it digs into the soil, the tool gradually cut the soil and the soil will be lifted by the bentonite water which will be pumped through the drill rods.

2.4 Installation of Temporary Casing

If required as per top soil conditions to avoid collapse of the strata, temporary casing shall be installed using Tractor mounted rig.

2.5 Drilling

After the temporary casing has been installed, drilling continues from the top of the hole. Special care must be taken in the horizontal position of the boring rig and vertical positioning of the drilling rod to ensure true vertical drilling is obtained .The drilling will proceed with the auger until the required depth is reached.

2.6 Installation of steel cage/column section.

Steel cage(s) preassembled in as many sections as needed and complete with the appropriate spacers and stiffeners will be lowered into the hole. Alternately design column section or of equivalent strength shall be lowered in to the hole and securely held in position.

2.7 Discharge of spoil

The spoil will be discharged nearby the pile location and remove from the site and dispose off properly to the dumping ground.

2.8 Visual samples

"Soil samples " will be obtained at every meters for visual examination These samples will be stored in plastic bags together with clear markings of date, pile number and depth.

2.9 Concreting

Concrete shall be placed by using a crane / Manual Tripod. concrete of slump 150±25mm shall be used. The top of tremie pipe is fitted with a feed hopper. The start of pouring is the most delicate part of operation. At this point, the bottom end of the tremie pipe is positioned about 300m from the base of the hole. The flow of concrete must be constant. The pipe must always be submerged to a depth of ranging from 0.50 in the mass that has already been poured.Concrete placing will proceed continuously until the designed level is achieved and sufficiently thereafter to allow for subsequent cutting back to sound concrete at the pile level.

2.10 Extraction of Temporary Casing

The temporary casing inserted as per item 2.4 shall be extracted by using a Crane/Manual Tripod.

INITIAL PILE LOAD TEST – METHODOLOGY
DIRECT COMPRESSION

1 GENERAL

1.1 The testing of pile will be carried out according to the Indian Standard IS: 2911 (Part4)-1985.

1.2 In accordance with the relevant provision of the Indian Standard IS:2911 (Part 4) 1985, the safe load on a single working pile in the load test shall be least of

a) Two- thirds of the final load at which the total displacement attains a value of 12 mm unless otherwise required in a given case on the basis of nature and type of structure in which case, the safe load should be corresponding to the stated total displacement permissible.

b) 50 percent of the final load at which the total displacement equal 10 percent of the pile diameter

2 METHODOLOTY OF TEST

2.1 It is proposed to conduct the load test on the test pile by the application of vertical compression loads on the pile top by means of a hydraulic jack reacting against a platform supporting the kentledge and the settlements will be recorded by suitable positioned dial gauges. Maintained – load method as detailed in the Indian Standard will be followed.

2.2 Initial & Routine pile load test will be carried out as per IS: 2911 (Part4).

3 PILE HEAD PREPARATION

3.1 The pile head will be chipped off carefully till sound concrete is met with. The projecting reinforcement bars will be cut off and the top finished smooth and level with plaster of paris so as to obtain a horizontal surface. On this prepared pile head a bearing plate will be placed to receive the jack base.

4 KENTLEDGE

4.1 The kentledge will consist of river/earth stacked over a platform built up of rolled steel beams and plates resting over them. The platform will rest over sand bag supports clear of the test pile. Alternately loading frame method may be used (if found suitable. Either of the method may be adopted.

4.2 The kentledge weight will be about 1.10 times more than the test load, providing a margin over the maximum test load. Care will be taken in the placement of the kentledge on the platform in order to ensure that the center of gravity line of the total load mass is, as far as practicable, coaxial with the axis of the pile.

4.3 The platform will be of suitable size to accommodate the kentledge.

5 SETTLEMENT OBSERVATONS

5.1 The load application and settlement observations will be made at the pile top.

5.2 Settlements will be recorded using four dial gauges with a least count of 0.01 mm and travel of 25 mm. The gauges will be positioned at an equal distance around the piles and will be held by datum bars resting on immovable supports at a minimum distance of 1.50 m from the peripheral edge of the pile.

6 LOAD APPLICATION

6.1 The test load will be applied by means of a hydraulic jack of suitable capacity. The jacks will butt against the jacking girder assembly bearing against the loaded platform. The jacking girder assembly will consist of rolled steel beams / plated beams, with the bottom flanges well braced.

6.2 The test will be carried out by applying a series of vertical downward incremental loads, each increment being about 20% of the safe load on the pile. The pressure Will be read from the pressure gauge attached to the hydraulic pump. At each stage of loading the actual gauge pressure multiplied by the total ram area of jack will be the applied load.

6.3 At each stage, the loading will be maintained till such time the rate of movement of pile head is not more than 0.1 mm in the first 30 minutes or 0.2 mm in the first one hour, or for a maximum of 2 hours, if either of the two earlier conditions is not fulfilled.

6.4 Time and settlement observations will be made at the commencement and completion of each stage of incremental loading. The settlement observations will also be continued at about 15 minute intervals during the period when the applied load is constant.

6.5 When the loading has reached the test load level, it will be maintained for a period of 24 hours. The loading will then be brought to zero gradually in stages by releasing the jacking pressure progressively.

7 RECORDS

7.1 The load, displacement and time will be recorded sequentially in a tabular form along with information about the test pile. A report will be prepared on the test, analyzing the test results and bringing out the conclusions. A load displacement curve will form an essential part of the presentation.

LATERAL LOAD TEST ON PILE - METHODOLOGY

1.0 GENERAL

1.1 The testing of lateral movement of pile shall be carried out according to the Indian Standard IS: 2911 (Part4)-1985.

1.2 In accordance with the relevant provision of the Indian Standard IS:2911 (Part 4) 1985, the safe load on a single working pile in the lateral load test.

2.0 PREPARATION OF PILE FIXING DIAL GUAGES FOR RECORDING HORIZONTAL REPLACEMENT

One of the methods for keeping dial gauge on pile surface is to chip off uneven concrete on the side of the pile on which the lateral load will be applied and to fix a piece of glass 20 to 30 mm square. The dial gauge tips shall rest on the central portion of the glass plate.

3.0 LOADING ARRANGEMENT

3.1 The test may be carried out by introducing a hydraulic jack with gauge between two piles or pile group under test or the reaction may be suitably obtain.

3.2 Conducted by jack located between two piles /groups/ concrete block/good earth surface, the full load imposed by the jack shall be taken as the lateral resistance of each pile or group.

3.3 The loading should be applied in increment of about 20 percent of the estimated safe load.

4.0 LOADING INCREMENT

The estimated safe lateral load may be divided into 5 increments. Usually, the Pressure gauge reading corresponding to each such increment will not correspond to one of the marked divisions on the pressure gauge (the marked division may be 10 kg/cm^2).in such a case, the load nearest to a marked division may be selected as a load increment. In this case of the load applied may not be a whole number.

5.0 LATERAL DISPLACEMENT RECORDING

The lateral displacement of the pile during lateral loading shall be recorded by using at least two dial gauges of 0.01mm sensitivity spaced at 30 cm vertically apart and kept horizontally one above the other on the test pile and the displacement interpolated at cut-off level from similar triangles, where cut-off level is unapproachable.

For approachable cut-off level, however' one dial gauge placed diametrically opposite to the jack shall directly measure the displacement. Where, it is not possible to locate one of the dial gauges in the line of the jack axis, then two dial gauges may be kept at a distance of 30 cm at a suitable height and the displacement interpolated at load point from similar triangles. The travel of the dial gauges shall be not less than 25 mm.

6.0 INTERPRETATION OF PILE LOAD TEST DATA

The safe load on a single pile shall be the least of the following:

(a) Fifty percent of the load at which the total displacement increases to 12 mm.

(b) Load at which the total displacement corresponds to 5 mm. Note: The displacement is at the cut-off level of the pile groups shall be tested under conditions as per actual use in the structure as far as possible.

7.0 HOW LONG SHALL EACH INCREMENT BE MAINTAINED

The next increment should be applied after the rate of displacement is nearer to 0.1 mm per 30 minutes.

8.0 UN-LOADING

There is no guideline in IS 2911 (Part 4)-1985, with regard to un-loading. However, it is recommended that un-loading is carried out in steps, skipping alternate load Increments used during loading. The rebound of the pile during un-loading shall be recorded in the same manner as in Sl. No. 8.

Note:

During loading increments or during un-loading decrements, the load on the pile shall be maintained, since the name of the method itself is "Maintained Load Method". To achieve this, the pressure gauge reading shall be watched continuously, and any drop in the pressure gauge reading during loading increments shall be made good by pumping. Similarly, during un-loading decrements any increase in the pressure gauge reading shall be made good by carefully reducing the pressure

PULL OUT TEST ON PILES – METHODOLOGY

1.0 GENERAL

1.1 The testing of uplift force of pile shall be carried out according to the Indian Standard IS: 2911 (Part4)-1985.

1.2 In accordance with the relevant provision of the Indian Standard IS:2911 (Part 4) 1985, the safe load on a single working pile in the uplift test shall be least of

a) Two- thirds of the final load at which the total displacement attains a value of 12 mm or the load corresponding to a specified permissible uplift, and

b) Half of the load at which the load displacement curve shows a clear break (downward trend)

2.0 METHODOLOGY OF TEST

2.1 It is proposed to conduct the uplift load test on the test pile by the application of uplift force by means of hydraulic jack with gauge using a suitable pull out set up.

2.2 The uplift test will be carried for a maximum load twice the estimated safe load or until the load displacement curve shows a clear break (downward trend)

2.3 The test pile shall have adequate steel to withstand pulling. In some cases, in order to allow for neck tension in a pull out test, it may be necessary to provide additional reinforcement in the piles to be tested.

2.4 The main reinforcement bar are extended out of the pile having the development length of about 1.0m from the cut off pile.

3.0 SETTLEMENT OBSERVATONS

3.1 The pull out load application and settlement observations will be read at the pile top as per the vertical load

3.2 Settlements shall be recorded using two/four dial gauges with a least count of 0.01 mm and travel of 25 mm. The gauges shall be positioned at an equal distance around the piles and will be held by datum bars resting on immovable supports at a minimum distance of 1.50 m from the peripheral edge of the pile. Typical load test set up is given in Annexure I .

4.0 LOAD APPLICATION

4.1 The test load shall be applied by means of a hydraulic jacks made to rest on 2 nos of 1.50 mtr height plated Girder resting on two support on the ground / adjacent piles support of suitable capacity. The jacks will butt against the jacking girder assembly bearing against the loaded platform. The jacking girder assembly will consist of rolled steel beams / plated beams, with the bottom flanges well braced.

4.2 Time and settlement observations will be made at the commencement and completion of each stage of incremental loading. The settlement observations will also be continued at about 15 minute intervals during the period when the applied load is constant.

5.0 LOADING INCREMENT

5.1 The estimated safe pull out load may be divided into 20% increments for loading. Usually, the pressure gauge reading corresponding to each such increment will not correspond to one of the marked divisions on the pressure gauge

5.2 In such a case, the load nearest to a marked division may be selected as a load increment in this case, the load applied may not be a whole number.

6.0 RECORDS

6.1 The load, displacement and time will be recorded sequentially in a tabular form along with information about the test pile. A report will be prepared on the test, analyzing the test results and bringing out the conclusions. A load displacement curve will form an essential part of the presentation.

PULLOUT TEST ARRANGEMENT

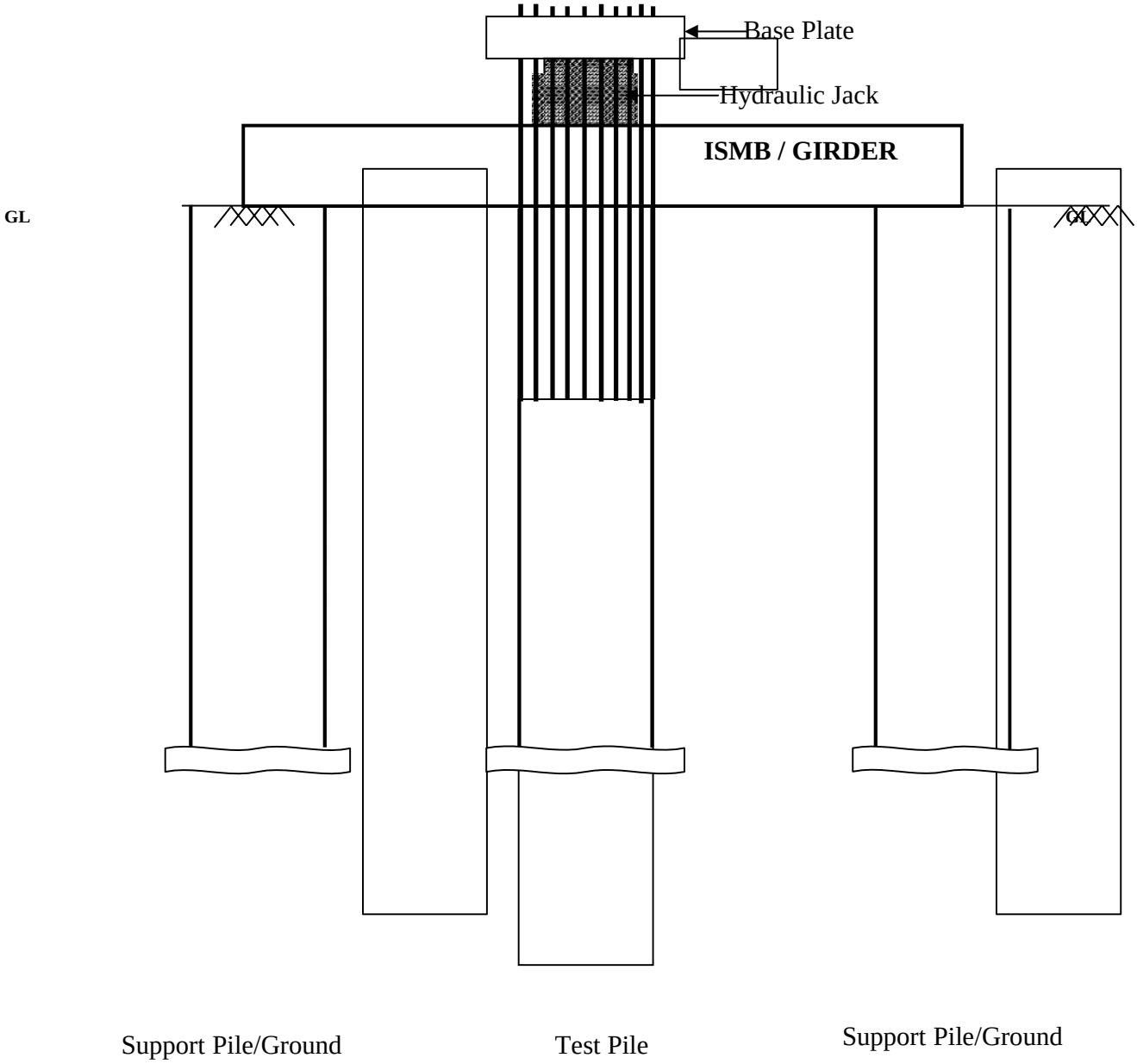

INTEGRITY PACT

Between

Bharat Heavy Electricals Ltd. (BHEL), a company registered under the Companies Act 1956 and having its registered office at "BHEL House", Siri Fort, New Delhi – 110049 (India) hereinafter referred to as "The Principal", which expression unless repugnant to the context or meaning hereof shall include its successors or assigns of the ONE PART

and

_____, (description of the party along with address), hereinafter referred to as "The Bidder/ Contractor" which expression unless repugnant to the context or meaning hereof shall include its successors or assigns of the OTHER PART

Preamble

The Principal intends to award, under laid-down organizational procedures, contract/s for _____

_____

_____. The Principal values full compliance with all relevant laws of the land, rules and regulations, and the principles of economic use of resources, and of fairness and transparency in its relations with its Bidder(s)/ Contractor(s).

In order to achieve these goals, the Principal will appoint Independent External Monitor(s), who will monitor the tender process and the execution of the contract for compliance with the principles mentioned above.

Section 1 – Commitments of the Principal

1.1 The Principal commits itself to take all measures necessary to prevent corruption and to observe the following principles:-

1.1.1 No employee of the Principal, personally or through family members, will in connection with the tender for, or the execution of a contract, demand, take a promise for or accept, for self or third person, any material or immaterial benefit which the person is not legally entitled to.

1.1.2 The Principal will, during the tender process treat all Bidder(s) with equity and reason. The Principal will in particular, before and during the tender process, provide to all Bidder(s) the same information and will not provide to any Bidder(s) confidential / additional information through which the Bidder(s) could obtain an advantage in relation to the tender process or the contract execution.

1.1.3 The Principal will exclude from the process all known prejudiced persons.

1.2 If the Principal obtains information on the conduct of any of its employees which is a penal offence under the Indian Penal Code 1860 and Prevention of Corruption Act 1988 or any other statutory penal enactment, or if there be a substantive suspicion in this regard, the Principal will inform its Vigilance Office and in addition can initiate disciplinary actions.

Section 2 – Commitments of the Bidder(s)/ Contractor(s)

2.1 The Bidder(s)/ Contractor(s) commit himself to take all measures necessary to prevent corruption. He commits himself to observe the following principles during his participation in the tender process and during the contract execution.

2.1.1 The Bidder(s)/ Contractor(s) will not, directly or through any other person or firm, offer, promise or give to the Principal or to any of the Principal's employees involved in the tender process or the execution of the contract or to any third person any material, immaterial or any other benefit which he / she is not legally entitled to, in

order to obtain in exchange any advantage of any kind whatsoever during the tender process or during the execution of the contract.

2.1.2 The Bidder(s)/ Contractor(s) will not enter with other Bidder(s) into any illegal or undisclosed agreement or understanding, whether formal or informal. This applies in particular to prices, specifications, certifications, subsidiary contracts, submission or non-submission of bids or any other actions to restrict competitiveness or to introduce cartelization in the bidding process.

2.1.3 The Bidder(s)/ Contractor(s) will not commit any penal offence under the relevant IPC/ PC Act; further the Bidder(s)/ Contractor(s) will not use improperly, for purposes of competition or personal gain, or pass on to others, any information or document provided by the Principal as part of the business relationship, regarding plans, technical proposals and business details, including information contained or transmitted electronically.

2.1.4 The Bidder(s)/ Contractor(s) will, when presenting his bid, disclose any and all payments he has made, and is committed to or intends to make to agents, brokers or any other intermediaries in connection with the award of the contract.

2.2 The Bidder(s)/ Contractor(s) will not instigate third persons to commit offences outlined above or be an accessory to such offences.

Section 3 – Disqualification from tender process and exclusion from future contracts

If the Bidder(s)/ Contractor(s), before award or during execution has committed a transgression through a violation of Section 2 above, or acts in any other manner such as to put his reliability or credibility in question, the Principal is entitled to disqualify the Bidders(s)/ Contractor(s) from the tender process or take action as per the separate “Guidelines for Suspension of Business Dealings with Suppliers/ Contractors” framed by the Principal.

Section 4 – Compensation for Damages

4.1 If the Principal has disqualified the Bidder(s) from the tender process prior to the award according to Section 3, the Principal is entitled to demand and recover the damages equivalent to Earnest Money Deposit/ Bid Security.

4.2 If the Principal has terminated the contract according to Section 3, or if the Principal is entitled to terminate the contract according to section 3, the Principal shall be entitled to demand and recover from the Contractor liquidated damages equivalent to 5% of the contract value or the amount equivalent to Security Deposit/Performance Bank Guarantee, whichever is higher.

Section 5 – Previous Transgression

5.1 The Bidder declares that no previous transgressions occurred in the last 3 years with any other company in any country conforming to the anti-corruption approach or with any other Public Sector Enterprise in India that could justify his exclusion from the tender process.

5.2 If the Bidder makes incorrect statement on this subject, he can be disqualified from the tender process or the contract, if already awarded, can be terminated for such reason.

Section 6 – Equal treatment of all Bidders/ Contractors/ Sub-contractors

6.1 The Bidder(s)/ Contractor(s) undertake(s) to demand from his sub-contractors a commitment consistent with this Integrity Pact. This commitment shall be taken only from those sub-contractors whose contract value is more than 20% of Bidder's/ Contractor's contract value with the Principal.

6.2 The Principal will enter into agreements with identical conditions as this one with all Bidders and Contractors.

6.3 The Principal will disqualify from the tender process all bidders who do not sign this pact or violate its provisions.

Section 7 – Criminal Charges against violating Bidders/ Contractors /Sub-contractors

If the Principal obtains knowledge of conduct of a Bidder, Contractor or Subcontractor, or of an employee or a representative or an associate of a Bidder, Contractor or Subcontractor which constitutes corruption, or if the Principal has substantive suspicion in this regard, the Principal will inform the Vigilance Office.

Section 8 –Independent External Monitor(s)

8.1 The Principal appoints competent and credible Independent External Monitor for this Pact. The task of the Monitor is to review independently and objectively, whether and to what extent the parties comply with the obligations under this agreement.

8.2 The Monitor is not subject to instructions by the representatives of the parties and performs his functions neutrally and independently. He reports to the CMD, BHEL.

8.3 The Bidder(s)/ Contractor(s) accepts that the Monitor has the right to access without restriction to all contract documentation of the Principal including that provided by the Bidder(s)/ Contractor(s). The Bidder(s)/ Contractor(s) will grant the monitor, upon his request and demonstration of a valid interest, unrestricted and unconditional access to his contract documentation. The same is applicable to Sub-contractor(s). The Monitor is under contractual obligation to treat the information and documents of the Bidder(s)/ Contractor(s) / Sub-contractor(s) with confidentiality.

8.4 The Principal will provide to the Monitor sufficient information about all meetings among the parties related to the contract provided such meetings could have an impact on the contractual relations between the Principal and the Contractor. The parties offer to the Monitor the option to participate in such meetings.

8.5 As soon as the Monitor notices, or believes to notice, a violation of this agreement, he will so inform the Management of the Principal and request the Management to discontinue or

take corrective action, or heal the situation, or to take other relevant action. The Monitor can in this regard submit non-binding recommendations. Beyond this, the Monitor has no right to demand from the parties that they act in a specific manner, refrain from action or tolerate action.

8.6 The Monitor will submit a written report to the CMD, BHEL within 8 to 10 weeks from the date of reference or intimation to him by the Principal and, should the occasion arise, submit proposals for correcting problematic situations.

8.7 The CMD, BHEL shall decide the compensation to be paid to the Monitor and its terms and conditions.

8.8 If the Monitor has reported to the CMD, BHEL, a substantiated suspicion of an offence under relevant IPC / PC Act, and the CMD, BHEL has not, within reasonable time, taken visible action to proceed against such offence or reported it to the Vigilance Office, the Monitor may also transmit this information directly to the Central Vigilance Commissioner, Government of India.

8.9 The number of Independent External Monitor(s) shall be decided by the CMD, BHEL.

8.10 The word ‘Monitor’ would include both singular and plural.

Section 9 – Pact Duration

9.1 This Pact begins when both parties have legally signed it. It expires for the Contractor 12 months after the last payment under the respective contract and for all other Bidders 6 months after the contract has been awarded.

9.2 If any claim is made / lodged during this time, the same shall be binding and continue to be valid despite the lapse of this pact as specified as above, unless it is discharged/ determined by the CMD, BHEL.

Section 10 – Other Provisions

10.1 This agreement is subject to Indian Laws and jurisdiction shall be registered office of the Principal, i.e. New Delhi.

10.2 Changes and supplements as well as termination notices need to be made in writing. Side agreements have not been made.

10.3 If the Contractor is a partnership or a consortium, this agreement must be signed by all partners or consortium members.

10.4 Should one or several provisions of this agreement turn out to be invalid, the remainder of this agreement remains valid. In this case, the parties will strive to come to an agreement to their original intentions.

10.5 Only those bidders/ contractors who have entered into this agreement with the Principal would be competent to participate in the bidding. In other words, entering into this agreement would be a preliminary qualification.

---	---
For & On behalf of the Principal	For & On behalf of the Bidder/ Contractor
(Office Seal)	(Office Seal)

Place----------

Date----------

Witness: _____	Witness: _____
(Name & Address) _____	(Name & Address)_____
_____	_____

INTEGRITY PACT

(a) IP is a tool to ensure that activities and transactions between the Company and its Bidders/Contractors are handled in a fair, transparent and corruption free manner. A panel of Independent External Monitors (IEMs) have been appointed to oversee implementation of IP in BHEL. The IP as enclosed with the tender (total 7 sheets) is to be submitted (duly signed by authorized signatory who signs in the offer) along with techno-commercial bid. Only those bidders who have entered into such an IP with BHEL would be competent to participate in the bidding. In other words, entering into this Pact would be a preliminary qualification.

Details of IEM for this tender is furnished below:

1. Shri D.R.S Chaudhary,IAS (Retd.),
   Flat No. L-202 & L-203 (1st Floor)Ansal Lake View Enclave,
   Shamla Hills, Bhopal- 462 013 (M.P.)
   Ph.: +91 755 4050495, Email: dilip.chaudhary@icloud.com

   AND

2. Mrs. Pravin Tripathi, IA and AS (Retd.)
   D-243, Anupam Gardens, Lane IB,
   Sainik Farms, New Delhi- 110 068.
   Email: pravin.tripathi@gmail.com

(b) Please refer Section-8 of the IP for Role and Responsibilities of IEMs. In case of any complaint arising out of the tendering process, the matter may be referred to the IEM mentioned inthe tender. No routine correspondence shall be addressed to the IEM (phone/post/email) regarding the clarifications, time extensions or any other administrative queries, etc. on the tender issued. All such clarification/issues shall be addressed directly to the tender issuing (procurement) department."

ANNEXURE A

PROFORMA OF BANK GUARANTEE FOR EARNEST MONEY

(On non-Judicial paper of appropriate value)

Bank Guarantee No…….

Date…….

To

(Employer's Name and Address)
……...

Dear Sirs,

In accordance with the terms and conditions of Invitation for Bids/Notice Inviting Tender No……1(Tender Conditions), M/s. …….. having its registered office at ……2 (hereinafter referred to as the 'Tenderer'), is submitting its bid for the work of**……..3** invited by ……4.(name of the Employer) through its Unit at ……(

The Tender Conditions provide that the Tenderer shall pay a sum of Rs …… as Earnest Money Deposit in the form therein mentioned. The form of payment of Earnest Money Deposit includes Bank Guarantee executed by a Scheduled Bank.

In lieu of the stipulations contained in the aforesaid Tender Conditions that an irrevocable and unconditional Bank Guarantee against Earnest Money Deposit for an amount of .....5 ..... is required to be submitted by the Tenderer as a condition precedent for participation in the said Tender and the Tenderer having approached us for giving the said Guarantee,

we, the .....[Name & address of the Bank] ..... having our Registered Office at …….(hereinafter referred to as the Bank) being the Guarantor under this Guarantee, hereby irrevocably and unconditionally undertake to forthwith and immediately pay to the Employer without any demur, merely on your first demand any sum or sums of Rs. 5 .....(in words Rupees.....) without any reservation, protest, and recourse and without the beneficiary needing to prove or demonstrate reasons for its such demand.

Any such demand made on the Bank shall be conclusive as regards the amount due and payable by the Bank under this guarantee. However, our liability under this guarantee shall be restricted to an amount not exceeding Rs. _____ _____.

We undertake to pay to the Employer any money so demanded notwithstanding any dispute or disputes raised by the Vendor/Contractor/Vendors in any suit or proceeding pending before any Court or Tribunal, Arbitrator or any other authority, our liability under this present being absolute and unequivocal.

The payment so made by us under this Guarantee shall be a valid discharge of our liability for payment hereunder and the Tenderer shall have no claim against us for making such payment.

We …….. Bank further agree that the Employer shall have the fullest liberty without our consent and without affecting in any manner our obligations hereunder to vary any of the terms and conditions of the said Tender or to extend the time of submission of from time to time or to postpone for any time or from time to time any of the powers exercisable by the Employer against the said Tenderer and we shall not be relieved from our liability by reason of any such variation, or extension being granted to the said Tenderer or for any forbearance, act or omission on the part of the Employer or any indulgence by the Employer to the said Tenderer or by any such matter or thing whatsoever which under the law relating to sureties would but for this provision have effect of so relieving us.

The Bank also agrees that the Employer at its option shall be entitled to enforce this Guarantee against the Bank as a principal debtor, in the first instance without proceeding against the Tenderer and notwithstanding any security or other guarantee that the Employer may have in relation to the Tenderer's liabilities.

This Guarantee shall be irrevocable and shall remain in force upto and including……..6 and shall be extended from time to time for such period as may be desired by the Employer.

This Guarantee shall not be determined or affected by liquidation or winding up, dissolution or change of constitution or insolvency of the Tenderer but shall in all respects and for all purposes be binding and operative until payment of all money payable to the Employer in terms hereof. However, unless a demand or claim under this Guarantee is made on us in writing on or before the …… [7] we shall be discharged from all liabilities under this Guarantee.

We, ……. Bank lastly undertake not to revoke this guarantee during its currency except with the previous consent of the Employer in writing.

Notwithstanding anything to the contrary contained hereinabove:

a) The liability of the Bank under this Guarantee shall not exceed……5…..
b) This Guarantee shall be valid up to ……6
c) Unless the Bank is served a written claim or demand on or before _____7 all rights under this guarantee shall be forfeited and the Bank shall be relieved and discharged from all liabilities under this guarantee irrespective of whether or not the original bank guarantee is returned to the Bank

We, _____ Bank, have power to issue this Guarantee under law and the undersigned as a duly authorized person has full powers to sign this Guarantee on behalf of the Bank.

For and on behalf of

(Name of the Bank)

Date…….

Place of Issue……..

PRICE BID (30MW MANUGURU)

MMS PILE FOUNDATION WORKS, MMS COLUMN, SUPERSTRUCTURE AND MODULE ERECTION, PILE LOAD TEST & LAND LEVELLING WORKS AND OTHER ASSOCIATED WORKS AT 30MW (AC) SPV POWER PLANT AT MANUGURU, TELANGANA.

SL. NO.	DESCRIPTION	UNIT	QTY	ITEM RATE (Excluding GST)	AMOUNT
1	Boring (with DTH/drilling machine) in any kind of soil/rock, providing and installing bored cast-in-situ reinforced/Plain cement concrete piles of grade M-25 of specified diameter and length below the pile cap, to carry a safe working load not less than specified, excluding the cost of steel reinforcement but including the cost of concrete, marking of pile location as per approved drawing with total station machine, boring, with bentonite solution and temporary casing of appropriate length for setting out and removal of same and the length of the pile to be embedded in the pile cap etc. all complete, (Cement Content shall be as per approved MIX DESIGN by BHEL/Owner) including removal of excavated earth with all lifts and leads (Length of pile for payment shall be measured upto bottom of pile cap). 300 mm dia piles,	Meter	32467.00	1193.283	38742311.00
2	Providing and laying in position machine batched and machine mixed design mix M-25 grade cement concrete for reinforced/Plain cement concrete work, using cement content as per approved design mix, including pumping of concrete to site of laying but excluding the cost of centering, shuttering, finishing and reinforcement, including admixtures in recommended proportions as per IS: 9103 to accelerate, retard setting of concrete, improve workability without impairing strength and durability as per direction of Engineer-in-charge (Cement Content shall be as per approved MIX DESIGN by BHEL/Owner).All works upto plinth level : MMS PILE CAP APPROX. HEIGHT 200MM FROM GL	Cum	971.00	5105.588	4957527.00
3	Centering and shuttering including strutting, propping etc. and removal of form for all heights : Foundations, footings, bases of columns, etc. for mass concrete	sqm	11461.00	153.608	1760506.00
4	Erection of Columns, Erection and Alignment of Column (structure legs) in plumb, as per the Co-ordinates of BHEL MMS coordinate drawing, inside pile foundation before pouring of concrete complete in all respect including template etc,collecting of columns material from store,shifting to work location,unpacking, disposal of unwanted packing material at identified location as per instruction of Engineer in charge. Complete all. (SUPPLY OF COLUMN MATERIAL IS IN BHEL SCOPE)	Tones	588.00	8141.166	4787006.00
5	Erection of Structure material using required fasteners as per BHEL GA-Drawing.Assembly to mentioned inclinated angle ,tightening of accessories using tools at mentioned torque including collecting structure material from store,shifting to work location,unpacking, disposal of unwanted packing material at identified location as per instruction of Engineer in charge complete all. (SUPPLY OF STRUCTURE MATERIAL AND FASTENERS IS IN BHEL SCOPE)	Tones	1332.00	1954.134	2602907.00
6	Erection of modules,placing,tightening using tools at desired/designed torque..(size approximately 1966 x 986 x 35 mm, Approx. Weight: 25 kg). including Erection bolts & nuts as per drawing and collecting module from BHEL STORE unpacking,shifting to work location, storing of modules packing material at identified location and handing over to BHEL as per instruction of Engineer In-charge, lead upto 5 KM (BHEL WILL SUPPLY PV MODULES & FASTENERS) all complete.	Nos	103000.00	18.369	1892007.00
7	Earth work in excavation by mechanical means (Hydraulic excavator, dozer, etc.,)/ manual means over areas (any depth. 1.5m in width as well as 10 sqm on plan) including, rolling, watering, compaction, & getting out & disposal of excavated earth, lead upto 5 km and lift upto 1.5m, disposed earth to be levelled, rolled/neatly dressed as per direction of Engineer-in -charge.all kind of soil	Cum	52813.00	99.752	5268224.00
8	Earth work in excavation by mechanical means (Hydraulic excavator, dozer, etc.,)/ manual means over areas (any depth. 1.5m in width as well as 10 sqm on plan) including, rolling, watering, compaction, & getting out & disposal of excavated earth, lead upto 5 km and lift upto 1.5m, disposed earth to be levelled, rolled/neatly dressed as per direction of Engineer-in -charge. Ordinary rock.	Cum	100.00	175.072	17508.00

CONTACTOR (SIGN AND SEAL)

PRICE BID (30MW MANUGURU)

MMS PILE FOUNDATION WORKS, MMS COLUMN, SUPERSTRUCTURE AND MODULE ERECTION, PILE LOAD TEST & LAND LEVELLING WORKS AND OTHER ASSOCIATED WORKS AT 30MW (AC) SPV POWER PLANT AT MANUGURU, TELANGANA.

SL. NO.	DESCRIPTION	UNIT	QTY	ITEM RATE (Excluding GST)	AMOUNT
9	Filling and banking with excavated earth in layers not exceeding 20 cm in depth, breaking clods, watering, rolling each layer with ½ tonne roller or wooden or steel rammers, and rolling every 3rd and top-most layer with power roller of minimum 8 tonnes and dressing up in embankments for roads, flood banks, marginal banks and guide banks or filling up ground depressions, lead upto 5km and lift upto 1.5 m (compaction as per required MDD minimum 95% as per approved FQP issued by BHEL): All kinds of soil.	Cum	5868.00	338.897	1988647.00
10	Finishing pile cap with water proofing cement paint of required shade :New work (Two or more coats applied @ 3.84 kg/10 sqm).	sqm	7959.00	46.570	370648.00
11	Demolishing cement concrete manually/ by mechanical means including disposal of material within 5km/away from plant premises lead as per direction of Engineer - in- charge. Nominal concrete 1:3:6 or richer mix (i/c equivalent design mix)	Cum	25.00	789.664	19742.00
12	Demolishing brick work /RRM manually/ by mechanical means including stacking of serviceable material and disposal of unserviceable material within 5km/away from plant premises lead as per direction of Engineer-in-charge.	Cum	25.00	667.458	16687.00
13	Demolishing R.C.C. work manually/ by mechanical means including stacking of steel bars and disposal of unserviceable material within 5km/away from plant premises lead as per direction of Engineer - in-charge.	Cum	25.00	1152.004	28801.00
14	Extra for cutting reinforcement bars manually/ by mechanical means in R.C.C. or R.B. work (Payment shall be made on the cross sectional area of R.C.C. or R.B. work) as per direction of Engineer -in -charge.	sqm	50.00	396.634	19832.00
15	Vertical load testing(initial) of piles in accordance with IS 2911(part-4) including installation of loading platform and preparation of pile head or construction of test cap and dismantling of test cap after test etc. complete as per specification and upto 50 tonne capacity pile. all complete as per the direction of engineer in charge	Nos	6.00	4045.500	24273.00
16	Pull out load testing (initial) of piles in accordance with IS 2911(part-4) including installation of loading platform and preparation of pile head or construction of test cap and dismantling of test cap after test etc. complete as per specification and upto 50 tonne capacity pile. all complete as per the direction of engineer in charge	Nos	6.00	4045.500	24273.00
17	Lateral load testing(initial) of single pile in accordance with IS:2911 (Part-4) for determining safe allowable lateral load on pile upto 50 tonne capacity as per direction of engineer in charge	Nos	6.00	4045.500	24273.00
18	Vertical load testing of piles in accordance with IS 2911(part-4) including installation of loading platform and preparation of pile head or construction of test cap and dismantling of test cap after test etc.Routine test (test load 1.5 times the safe capacity) complete as per the direction of engineer in charge	Nos	361.00	246.780	89088.00
19	Uplift testing of piles in accordance with IS 2911(part-4) including installation of loading platform and preparation of pile head or construction of test cap and dismantling of test cap after test etc. Routine test (test load 1.5 times the safe capacity) complete as per the direction of engineer in charge	Nos	361.00	246.780	89088.00
20	Lateral load testing of single pile in accordance with IS:2911 (Part-4) for determining safe allowable lateral load on pile.Routine test (as per design load) complete as per the direction of engineer in charge	Nos	361.00	246.780	89088.00
				TOTAL AMOUNT:	**Rs. 62,812,436.00**
QUOTE PERCENTAGE (%) ABOVE/BELOW (+/-) (OR) AT PAR TO TOTAL AMOUNT					
QUOTED PERCENTAGE (%) IN WORDS ABOVE/BELOW (OR) AT PAR TO TOTAL AMOUNT					
Plus applicable GST					

NOTE:
1. CONTRACTOR SHOULD QUOTE PERCENTAGE (%) ABOVE/BELOW (OR) AT PAR TO TOTAL AMOUNT
2. QUOTED PERCENTAGE (%) IS APPLICABLE ON ALL ITEM RATES UNIFORMLY.

CONTACTOR (SIGN AND SEAL)

PRICE BID (10MW STPP PEGADAPALLY)

MMS PILE FOUNDATION WORKS, MMS COLUMN, SUPERSTRUCTURE AND MODULE ERECTION, PILE LOAD TEST & LAND LEVELLING WORKS AND OTHER ASSOCIATED WORKS AT 10MW (AC) SPV POWER PLANT AT STPP PEGADAPALLY, TELANGANA.

SL. NO.	DESCRIPTION	UNIT	QTY	ITEM RATE (Excluding GST)	AMOUNT
1	Boring (with DTH/drilling machine) in any kind of soil/rock, providing and installing bored cast-in-situ reinforced/Plain cement concrete piles of grade M-25 of specified diameter and length below the pile cap, to carry a safe working load not less than specified, excluding the cost of steel reinforcement but including the cost of concrete, marking of pile location as per approved drawing with total station machine, boring, with bentonite solution and temporary casing of appropriate length for setting out and removal of same and the length of the pile to be embedded in the pile cap etc. all complete, (Cement Content shall be as per approved MIX DESIGN by BHEL/Owner) including removal of excavated earth with all lifts and leads (Length of pile for payment shall be measured upto bottom of pile cap). 300 mm dia piles,	Meter	10552.00	1193.282	12591513.00
2	Providing and laying in position machine batched and machine mixed design mix M-25 grade cement concrete for reinforced/Plain cement concrete work, using cement content as per approved design mix, including pumping of concrete to site of laying but excluding the cost of centering, shuttering, finishing and reinforcement, including admixtures in recommended proportions as per IS: 9103 to accelerate, retard setting of concrete, improve workability without impairing strength and durability as per direction of Engineer-in-charge (Cement Content shall be as per approved MIX DESIGN by BHEL/Owner).All works upto plinth level : MMS PILE CAP APPROX. HEIGHT 200MM FROM GL	Cum	314.00	5105.588	1603155.00
3	Centering and shuttering including strutting, propping etc. and removal of form for all heights : Foundations, footings, bases of columns, etc. for mass concrete	sqm	3712.00	153.608	570195.00
4	Erection of Columns, Erection and Alignment of Column (structure legs) in plumb, as per the Co-ordinates of BHEL MMS coordinate drawing, inside pile foundation before pouring of concrete complete in all respect including template etc,collecting of columns material from store,shifting to work location,unpacking, disposal of unwanted packing material at identified location as per instruction of Engineer in charge. Complete all. (SUPPLY OF COLUMN MATERIAL IS IN BHEL SCOPE)	Tones	198.00	8141.166	1611951.00
5	Erection of Structure material using required fasteners as per BHEL GA-Drawing.Assembly to mentioned inclinated angle ,tightening of accessories using tools at mentioned torque including collecting structure material from store,shifting to work location,unpacking, disposal of unwanted packing material at identified location as per instruction of Engineer in charge complete all. (SUPPLY OF STRUCTURE MATERIAL AND FASTENERS IS IN BHEL SCOPE)	Tones	466.00	1954.134	910627.00
6	Erection of modules,placing,tightening using tools at desired/designed torque..(size approximately 1966 x 986 x 35 mm, Approx. Weight: 25 kg). including Erection bolts & nuts as per drawing and collecting module from BHEL STORE unpacking,shifting to work location, storing of modules packing material at identified location and handing over to BHEL as per instruction of Engineer In-charge, lead upto 5 KM (BHEL WILL SUPPLY PV MODULES & FASTENERS) all complete.	Nos	33360.00	18.369	612790.00
7	Earth work in excavation by mechanical means (Hydraulic excavator, dozer, etc.,)/ manual means over areas (any depth. 1.5m in width as well as 10 sqm on plan) including, rolling, watering, compaction, & getting out & disposal of excavated earth, lead upto 5 km and lift upto 1.5m, disposed earth to be levelled, rolled/neatly dressed as per direction of Engineer-in -charge.all kind of soil	Cum	20506.00	99.752	2045523.00
8	Earth work in excavation by mechanical means (Hydraulic excavator, dozer, etc.,)/ manual means over areas (any depth. 1.5m in width as well as 10 sqm on plan) including, rolling, watering, compaction, & getting out & disposal of excavated earth, lead upto 5 km and lift upto 1.5m, disposed earth to be levelled, rolled/neatly dressed as per direction of Engineer-in -charge. Ordinary rock.	Cum	100.00	175.072	17508.00

CONTACTOR (SIGN AND SEAL)

PRICE BID (10MW STPP PEGADAPALLY)

MMS PILE FOUNDATION WORKS, MMS COLUMN, SUPERSTRUCTURE AND MODULE ERECTION, PILE LOAD TEST & LAND LEVELLING WORKS AND OTHER ASSOCIATED WORKS AT 10MW (AC) SPV POWER PLANT AT STPP PEGADAPALLY, TELANGANA.

SL. NO.	DESCRIPTION	UNIT	QTY	ITEM RATE (Excluding GST)	AMOUNT
9	Filling and banking with excavated earth in layers not exceeding 20 cm in depth, breaking clods, watering, rolling each layer with ½ tonne roller or wooden or steel rammers, and rolling every 3rd and top-most layer with power roller of minimum 8 tonnes and dressing up in embankments for roads, flood banks, marginal banks and guide banks or filling up ground depressions, lead upto 5km and lift upto 1.5 m (compaction as per required MDD minimum 95% as per approved FQP issued by BHEL): All kinds of soil.	Cum	2279.00	338.897	772346.00
10	Finishing pile cap with water proofing cement paint of required shade :New work (Two or more coats applied @ 3.84 kg/10 sqm).	sqm	2578.00	46.570	120057.00
11	Demolishing cement concrete manually/ by mechanical means including disposal of material within 5km/away from plant premises lead as per direction of Engineer - in- charge. Nominal concrete 1:3:6 or richer mix (i/c equivalent design mix)	Cum	25.00	789.664	19742.00
12	Demolishing brick work /RRM manually/ by mechanical means including stacking of serviceable material and disposal of unserviceable material within 5km/away from plant premises lead as per direction of Engineer-in-charge.	Cum	25.00	667.458	16687.00
13	Demolishing R.C.C. work manually/ by mechanical means including stacking of steel bars and disposal of unserviceable material within 5km/away from plant premises lead as per direction of Engineer - in-charge.	Cum	25.00	1152.004	28801.00
14	Extra for cutting reinforcement bars manually/ by mechanical means in R.C.C. or R.B. work (Payment shall be made on the cross sectional area of R.C.C. or R.B. work) as per direction of Engineer -in -charge.	sqm	50.00	396.634	19832.00
15	Vertical load testing(initial) of piles in accordance with IS 2911(part-4) including installation of loading platform and preparation of pile head or construction of test cap and dismantling of test cap after test etc. complete as per specification and upto 50 tonne capacity pile. all complete as per the direction of engineer in charge	Nos	12.00	4045.500	48546.00
16	Pull out load testing (initial) of piles in accordance with IS 2911(part-4) including installation of loading platform and preparation of pile head or construction of test cap and dismantling of test cap after test etc. complete as per specification and upto 50 tonne capacity pile. all complete as per the direction of engineer in charge	Nos	12.00	4045.500	48546.00
17	Lateral load testing(initial) of single pile in accordance with IS:2911 (Part-4) for determining safe allowable lateral load on pile upto 50 tonne capacity as per direction of engineer in charge	Nos	12.00	4045.500	48546.00
18	Vertical load testing of piles in accordance with IS 2911(part-4) including installation of loading platform and preparation of pile head or construction of test cap and dismantling of test cap after test etc.Routine test (test load 1.5 times the safe capacity) complete as per the direction of engineer in charge	Nos	117.00	246.780	28874.00
19	Uplift testing of piles in accordance with IS 2911(part-4) including installation of loading platform and preparation of pile head or construction of test cap and dismantling of test cap after test etc. Routine test (test load 1.5 times the safe capacity) complete as per the direction of engineer in charge	Nos	117.00	246.780	28874.00
20	Lateral load testing of single pile in accordance with IS:2911 (Part-4) for determining safe allowable lateral load on pile.Routine test (as per design load) complete as per the direction of engineer in charge	Nos	117.00	246.780	28874.00
				TOTAL AMOUNT:	**Rs. 21,172,987.00**

QUOTE PERCENTAGE (%) ABOVE/BELOW (+/-) (OR) AT PAR TO TOTAL AMOUNT

QUOTED PERCENTAGE (%) IN WORDS ABOVE/BELOW (OR) AT PAR TO TOTAL AMOUNT

Plus applicable GST

NOTE:

1. CONTRACTOR SHOULD QUOTE PERCENTAGE (%) ABOVE/BELOW (OR) AT PAR TO TOTAL AMOUNT

2. QUOTED PERCENTAGE (%) IS APPLICABLE ON ALL ITEM RATES UNIFORMLY.

CONTACTOR (SIGN AND SEAL)