Bharat Heavy Electricals Limited
ELECTRONICS DIVISION
Mysore Road, Bangalore – 560026 Ph.080-26998175
SC&PV – PVE- DEPT.

NOTICE INVITING TENDERS

1	TENDER NUMBER(RFQ)	:	EDN: PVSS: GIPCL:75 MW:MMS Civ/02 Dt: 16.05.2018
2	NAME OF WORK	:	Module Mounting Structure piling works, erection of structures along with land levelling works (Module Mounting Structure, fastener & PV module supply by BHEL) for 75 MWp (AC) SPV power plant for GIPCL, at Charanka Solar Park, Gujarat (All listed works shall be Undertaken and executed)
3	ESTIMATED COST	:	**Rs 1249.1 Lakhs (APPROX.) Excluding GST.**
4	EARNEST MONEY DEPOSIT	:	**Rs.9 Lakhs (Mandatory for MSME also)**
5	SECURITY DEPOSIT	:	50% of SD shall be submitted before start of work; Balance will be recovered from running Bills at a rate of 10%. (SD= 5% of the work order amount); 50% of SD will be released after completion of all the works and remaining 50% after 6 months from the date of completion of all the works.
6	COMPLETION TIME	:	a) 05 (Five) Months for 50% & above Scope of Work bidders. b) 04 (Four) Months for 20% to 50% Scope of Work bidders. c) 03 (Three) Months for 20% & below Scope of Work bidders. (From the date of placement of Order/handing over of site.)
7	LAST DATE AND TIME FOR THE SUBMISSION OF DULY FILLED IN TENDER DOCUMENT	:	01.06.2018 Before 01:00 P.M
8	PLACE OF SUBMISSION OF TENDER DOCUMENT	:	Smt. PRACHI RAO V , SDGM (SC&PV- Engg) 5th Floor, New Engineering Building, BHEL- Electronics Division Mysore Road, Bangalore -560 026.
9	ADDRESS TO BE SUPERSCRIBED ON TENDER ENVELOPE	:	Smt. PRACHI RAO V , SDGM (SC&PV- Engg) 5th Floor, New Engineering Building, BHEL- Electronics Division Mysore Road, Bangalore -560 026.
10	DATE AND TIME OF TECHNICAL BID OPENING	:	01.06.2018 Before 01:30 P.M
11	TENDER MONITORING AUTHORITY	:	Shri D.R.S Chaudhary, IAS (Retd.) Email: dilip.chaudhary@icloud.com

NOTE: The tenderer shall return the dully filled in tender document after affixing signature on all pages and submit.

R.Palanikumar
Dy. Manager-Civil,BHEL-EDN

CONTRACTOR (SIGN & SEAL)

Bharat Heavy Electricals Ltd
Electronics Division
Mysore Road, Bangalore – 560026

Tender Document for

Module Mounting Structure piling works, erection of structures along with land levelling works (Module Mounting Structure, fastener & PV module supply by BHEL) for 75 MWp (AC) SPV power plant for GIPCL, at Charanka Solar Park, Gujarat

TENDER NUMBER RFQ: EDN: PVSS: GIPCL:75 MW:MMS Civ/02 Dt: 16.05.2018

TECHNICAL BID DATE OF SUBMISSION/OPENING : 01-06-2018 (Price bid opening date intimation will be given separately)

Part – I	Technical cum Commercial Bid	…….	44 Pages
	Unpriced Price Bid	…….	02 Pages
	Technical Specifications	……	16 Pages
	BHEL General Conditions of Contract	……	40 Pages
	Drawing	……	01 Pages
	Integrity Pact	……	07 Pages
Part – II	Price Bid	……..	02 Pages

Note:

1. Part – I: To be submitted in a separate sealed cover.
2. Part – II: To be submitted in a separate sealed cover.
3. Earnest Money Deposit of Rupees 9 Lakhs through SBI Collect/DD should be submitted in a separate sealed cover. (For SBI Collect details please refer point no :17 of Instructions to tenderer of this tender document)
4. Tenders will be liable for rejection if the above DD is not submitted.
5. Part-I, Part-II, Tender EMD sealed covers should be put in outer envelope and super scribing the Name of work and Name & Address of the Tenderer.

R.Palanikumar
Dy. Manager-Civil,BHEL-EDN

CONTRACTOR (SIGN & SEAL)

BHARAT HEAVY ELECTRICALS LTD, ELECTRONICS DIVISION, BANGALORE-26

TENDER NO. EDN: PVSS: GIPCL:75 MW:MMS Civ/02 Dt: 16.05.2018

PART-I TECHNICAL-CUM-COMMERCIAL BID

(To be furnished by the Bidders)

01. NAME OF THE WORK : **Module Mounting Structure piling works, erection of structures along with land levelling works (Module Mounting Structure, fastener & PV module supply by BHEL) for 75 MWp (AC) SPV power plant for GIPCL, at Charanka Solar Park, Gujarat**

(All listed works shall be Undertaken and executed)

02. APPROXIMATE ESTT.COST RS. : Rs 1249.1 Lakhs (APPROX.) Excluding GST.

03. COMPLETION PERIOD : a) 05 (Five) Months for 50% & above Scope of Work bidders.
b) 04 (Four) Months for 20% to 50% Scope of Work bidders.
c) 03 (Three) Months for 20% & below Scope of Work bidders.
(From the date of placement of Order/handing over of site.)

04. NAME OF THE CONTRACTOR :

05. ADDRESS

(A) OFFICE :

E-mail :

TEL. PH. NO. :

(B)RESIDENCE :

TEL.PH NO :

06. PAN NO :

07. GST NO :

08. STAFF STRENGTH :

R.Palanikumar
Dy. Manager-Civil,BHEL-EDN

CONTRACTOR (SIGN & SEAL)

09. PLANT/EQUIPMENTS : List enclosed/not enclosed

10. a) SCOPE OF WORK : UNDERSTOOD/ NOT UNDERSTOOD
(As per schedule of items)

b) Accept to execute in total : YES/ NO

c) Bar chart to be submitted : YES/ NO
Individually for each work for L1 Scope

e) In order to complete the project in the specified months schedule, vendor to deploy separate Three gangs/teams for each individual activities along with tools and machineries, Undertaking should be submitted along with offer : YES/ NO

11. a) EMD PARTICULARS (DEMAND DRAFT/ SBI COLLECT REF NO) :

b) Electronic Funds Transfer (EFT) form enclosed : Please fill up the form in ANNEXURE-II

12. Penalty of 1.0% per week or part thereof on delay of contract value of work subject to Ceiling of 10% of the contract Value. : Accepted / Not accepted

Note: 1. Bidders are advised to quote their best prices (% over the estimate +/_) as no further price bids will be accepted in case BHEL decides to open price bids instead of reverse auction.

2. Reverse auction seal bid opening price should not be more than the manual quoted (hand written) price bid

R.Palanikumar
Dy. Manager-Civil,BHEL-EDN

CONTRACTOR (SIGN & SEAL)

PRE QUALIFICATION CRETERIA

1) Experience of having successfully completed similar works like Pile Foundation for MMS works/building/any infra works during last 7 years from the date of tender notice.
   a) Three similar completed works Pile Foundation for MMS works/building/any infra works each costing not less than an amount equal to 40% (Rs. 499.65 Lakhs) of estimated value mentioned against each work in the tender notice.

   OR

   b) Two similar completed works Pile Foundation for MMS works/building/any infra works each costing not less than an amount equal to 50% (Rs. 624.57 Lakhs) estimated value mentioned against each work in the tender notice.

   OR

   c) One similar completed work Pile Foundation for MMS work/building/any infra work each costing not less than an amount equal to 80% (Rs. 999.31 lakhs) estimated value mentioned against each work in the tender notice.
2) Average annual financial turn over during the last 3 years, ending 31st March of the previous financial year should be 30% (Rs. 374.74 Lakhs) of the estimated cost.

Note: Offers of the Tenderers not meeting the above requirements are liable to be rejected.

BIDDER TO NOTE FOR COMPLIANCE:

Techno Commercial bid to be filled by the bidder.

S.no	Description	Confirmation	Remarks
1	Machineries to be deployed	YES/NO	List to be furnished.
2	BHEL Payment terms acceptance (Clause no:ii of Information to the tenderer and Cl no.21 of Special Conditions of Contract)	YES/NO	
3	BHEL reserves right to conduct reverse auction. Indicate acceptance.	YES/NO	
4	Accept to engage 65% of the jobs that will be created due to the projected in the supervisory and managerial cadres and 80% of the jobs that will be created in other cadres due to the project shall be filled in by employing the local persons	YES/NO	

R.Palanikumar
Dy. Manager-Civil,BHEL-EDN

CONTRACTOR (SIGN & SEAL)

5	Before engaging the labour in to work, Contractor should get the NOC from labours' native police station as well as NOC from Santhalpur police station.	YES/NO	

NOTE:

1) In view of large quantum of work and restricted period for completion of project, proposed to split the contract/scope of work in four parts as **35%:30%:20%:15%** ratio as per site requirement.

2) It is proposed to award the work to **L1, L2, L3 & L4** bidder with scope of work as mentioned above in such case L2, L3 & L4 bidder has to match the price of L1 bidder. In case of denial of the same by L2 ,L3 &L4 , it shall be offered subsequently to all other bidders till we get two vendors to accept L1 prices and then scope of work shall be divided as mentioned above. But in case two/three vendors denied to accept L1 price and only one bidder agrees for L1 price, the scope of work shall be divided as 50:30:20 (L1,L2,L3) or 60% to L1 and 40% to L2. However in case no bidder agrees to match L1 price , then L1 bidder is bound to execute 100% of the work order scope.

Documents required to be submitted

1. Registration Certificate with ESI and PF Authority/Declaration.
2. Income Tax Returns for last Three years
3. Balance Sheet and Profit & Loss Account for the last Three years by auditor.
4. Availability of Technical personnel in letter head.
5. Registration with BHEL/CPWD/other Govt. organization/PSU if any.
6. Declaration for full filling the BOCW requirements.
7. List of equipment to be mobilized at site.
8. GST Registration details or Declaration.

All the supporting documents to be attested by a gazette officer (BHEL have the rights to verify the original documents if required)

INFORMATION TO THE TENDERER:

(i) Successful Bidder should establish their Site office at Construction site, including common facilities such as toilet, water, electricity etc. in consultation with BHEL. Contractor has to arrange water and power as required for completing the job in the stipulated time frame at their own cost.

R.Palanikumar
Dy. Manager-Civil,BHEL-EDN

CONTRACTOR (SIGN & SEAL)

(ii) BHEL Payment terms for Works at Plot C (or) Plot B2:

A) RA1: Levelling & grading (min 25 Acre) with min 2MW (Piling & concreting along with pile load test).
B) RA2: Levelling & grading (min 50 Acre) with min 5MW (Piling & concreting), Structure assembly & Module Mounting for 2MW and other miscellaneous works.
C) RA3: Levelling & grading (min 20 Acre) with min 5MW (Piling & concreting), Structure assembly & Module Mounting for 5MW and other miscellaneous works.
D) RA4: Balance Levelling & grading with min 5MW (Piling & concreting), Structure assembly & Module Mounting for 5MW and other miscellaneous works.
E) RA5: 5MW Piling & concreting, Structure assembly & Module Mounting for 5MW and other miscellaneous works.
F) RA6: 5MW Piling & concreting, Structure assembly & Module Mounting for 10MW and other miscellaneous works
G) Similar terms would be followed for all the contractors at "Plot C/B2" billing.
H) Final Bill: Coping and Painting for 100% MMS works.

(iii) The bidders should furnish "Site Inspection Certificate" in Annexure-III enclosed herewith.

(iv) Bidders should study the prevailing Market trend of Construction materials/laborers/other relevant requirement before quote and submit the competitive price.

(v) 65% of the jobs created due to the project in the supervisory and managerial cadres & 80% 0f the jobs that will be created in other cadres shall be filled in by employing local persons. "The expression Local person shall mean a person domiciled in Gujarat State for 15 years prior to applying for employment to you. Contractor shall submnit documentary evidence in support of the above within 7 days of work order.

(vi) Before engaging the labour in to work, Contractor should get the NOC from labours' native police station as well as NOC from Santhalpur, Gujarat police station.

(vii) The bidders should carry out preliminary survey at proposed construction site before submission of offer to ensure that the rate quoted for the relevant schedule of items are correct.

(viii) Contractor to note BHEL reserves the right to get any part of the work done through other agency or deploy BHEL's own/hired/otherwise arranged resources, at the risk and cost of the contractor after due notice of a period of two weeks by BHEL, in the event of:-

a) Contractors continued poor progress
b) Withdrawal from or abandonment of the work before completion of the work.
c) Contractor's inability to progress the work for completion as stipulated in the contract
d) Poor quality of work
e) Corrupt act of Contractor
f) Insolvency of the contractor

R.Palanikumar
Dy. Manager-Civil,BHEL-EDN

CONTRACTOR (SIGN & SEAL)

g) Persistent disregard to the instructions of BHEL
h) Assignment, transfer, sub-letting of contract without BHEL's written permission
i) Non fulfillment of any contractual obligations
j) In the opinion of BHEL, the contractor is overloaded and is not in a position to execute job as per required schedule.

(ix) The liquidated damages/penalties arising out of Risk and Cost as explained under Sl.no (v). BHEL shall recover the amount from any money due from Contractor, or from any money due to the contractor including security deposit, or by forfeiting any T & P or material of the contractor under this contract or any other contract of BHEL or by any other means or any combination thereof.

(vii) **Documents to be submitted on award of work (as applicable):**

a) Security deposit in the form of Cash/DD/ NSC's / Kisan Vikas Patra / FDR / Bank Guarantee in favour of BHEL

(b)Electronic Fund Transfer Form duly signed & sealed by banker along with cancelled cheque copy

(c) Labour license of the workmen engaged valid for contract period

(d) Workmen Compensation Insurance Policy for the workmen engaged valid for contract period

(e) Deduction of VAT (WCT) at source would be enforced from the running bills at the rates prescribed unless exemption certificate is produced from the concerned authorities.

(x) The following documents are to be submitted along with the Running Account Bills for process of payment
a) Tax Invoice with details of GST number of BHEL and contractor.
b) Measurement books duly filled and signed officials of BHEL and contractor
c) Provident PF Remittance challan of previous month.
d) ESI Remittance challan of previous month.
e) Invoice submitted along with running bills to indicate the GST amount charged and bear GST NUMBER etc. as per prevailing taxes.
Bill submitted subsequently to be accompanied with a declaration that GST liability on the earlier bill has been discharged.
i) by paying money to the Government (along with Tax paid Challan Copy)
ii) by utilization of Input GST Credit
f) Letter of undertaking declaring inclusion of VAT Monthly/quarterly VAT return, duly incorporating the erection income from BHEL as turnover. Copy of such returns should be submitted to BHEL at regular intervals with all annexure and details of payment of VAT (WCT).

R.Palanikumar
Dy. Manager-Civil,BHEL-EDN

CONTRACTOR (SIGN & SEAL)

Mobilization at site:

1) Requisite Material, men and machinery (Power chain saw, JCB/excavator/dozer, Total station & other equipment of bush clearance etc.) should be arranged in order to complete the project within stipulated time period.
2) The contractor shall carry the work as per the Field Quality Plan issued by BHEL
3) Calibration of equipment's should be done by NABL accredited laboratories.

Bharat Heavy Electricals Limited
ELECTRONICS DIVISION
MYSORE ROAD- BANGALORE-26
INSTRUCTIONS TO TENDERER

1. Sealed Tender for the above noted work is hereby invited from Contractors experienced in similar civil works like works Pile Foundation and MMS works/building/any infra works etc.
2. Scope of work for 75MW: a) **Module Mounting Structure piling works, erection of structures along with land levelling works (Module Mounting Structure, fastener & PV module supply by BHEL)** as per Tender/approved construction drawing, works as per instruction of Engineer in charge, terms and condition of contract. However Depending on site conditions minor modification in works may be necessary.
3. Location and Approach

Village	Charanka
Taluk	Santalpur
District	Patan
Location	Charanka Solar Park,
Nearest Urban Area	Radhanpur
Nearest Highway	NH 15
Nearest Railway Station	Santalpur, which is 16.5 km from the site.
Nearest Domestic Airport	Ahmedabad, which is at a distance of about 200 km from the site.
State	Gujarat

R.Palanikumar
Dy. Manager-Civil,BHEL-EDN

CONTRACTOR (SIGN & SEAL)

4. **Tenders should be addressed to** : Smt. PRACHI RAO V , SDGM (SC&PV- Engg**, NEB 5th Floor, Electronics Division, Bharat Heavy Electricals Limited, Mysore road, Bangalore – 560 026. In three separate sealed cover for "Technical cum Commercial Bid", Price Bid and DD for Tender document Cost (if applicable) & EMD duly super scribed and put in an outer envelope, super scribing the Name of work, Tender no. and Name and address of the Tenderer.**

5. The local address of the Contractors, the name of the person to whom all the Correspondence are to be addressed should be indicated, with telephone number (both office and residence).

6. All entries in tender documents should be in one ink (preferably blue ink). Erasing and overwriting is not permitted. All corrections should be duly signed by tenderer concerned.

7. Tenderers shall fill in all the required particular in the blank space provided for this purpose in the tender documents and also sign in each and every page of the tender document including the drawings attached there to before submitting tender.

8. Unit rate/percentage above or below estimate should be quoted in figures as well as in words in Indian Currency only i.e. Rupees and Paisa with reference to each item and for the items shown in the attached schedule. These rates shall be for the finished work at site. The rate shall include all taxes and duties payable on account of Octroi, Sales Tax, tax on work contract etc., and also expenses towards PF and ESI contributions (see clauses 8, 40 and Enclosure 'C') but excluding

9. GST. Amount of each item and total on each sheet as also the grand total amount of the whole contract shall be filled by the tenderers.

10. In case the rate quoted in figures differs from those quoted in words, the lower of the rates quoted will be taken as the tendered rate and shall be binding on the tenderer.

11. The rate to be quoted by the tenderer shall be firm and shall cover and include all statutory levies such as "Octroi, sales tax, excise duty etc., arising from Act passed by Parliament or State Legislature and rules framed there under. The rates shall further be deemed to include statutory levies arising from such Acts, Central or State, which may come into force, subsequent to submission of tenders.

R.Palanikumar
Dy. Manager-Civil,BHEL-EDN

CONTRACTOR (SIGN & SEAL)

12. (a) The rate quoted in the tender shall remain valid for a period of 'THREE MONTHS' from the date of opening tender.

(b) Tenderer shall not increase quoted rates, once the tenderer has submitted offers/quotation/price and during execution of contract in case tender is accepted.

(c) Successful bidder should execute the work strictly in accordance with Tender schedule quoted rates as accepted by BHEL.

(d) **PRICE VARIATION clause not applicable**.

13. The rates quoted should be inclusive of all taxes arising on the transaction. If BHEL is required to discharge the liability of any taxes on the transaction like TDS(IT), TDS(WCT), under reverse charge mechanism or any other similar taxes, which is or becomes payable by BHEL, the same shall be deducted from the bills of the contractor. **The rate/Percentage quoted by bidder shall be including all taxes but excluding GST which shall be shown separately in price bid.**

14. Quantities shown in the schedule are only approximate and are liable to variation without entitling the Contractors to any compensation, provided the total value of the contract does not vary by more than 20% (Twenty percent). Deviation beyond the above limits is subject to the standard terms and conditions of BHEL.

15. Before tendering, the tenderer are advised to inspect the site of work and its environments and be well acquainted with the actual working and other prevailing conditions, position of material and labour. They should be well versed with BHEL General Conditions of Contract instruction to the tenderers, drawing and specification and all other documents which form part of the agreement to be entered into subsequent to award of work. The tenderer should be specially note that it is tenderers responsibility to provide any items which is not specifically mentioned in the specifications and drawing, but which is necessary to complete the work.

16. Details and quantities of each item of work shown in the bill of quantities attached here to only approximate. They are given as a guide for the purpose of tendering only and are liable for variation and alteration at the discretion of the competent authority. The work under each item as executed

R.Palanikumar
Dy. Manager-Civil,BHEL-EDN

CONTRACTOR (SIGN & SEAL)

shall be measured and price at the corresponding rates to be quoted by the Contractor in the bill of quantities attached hereto.

17. Should a tenderer find discrepancies or omission in the drawing attached to the tender documents or should be in doubt as to their meaning he should at once address to the authority inviting the tender for clarifications. Every endeavor is made to avoid any error which can materially affect the basis of the tender but successful tenderer shall take upon himself to provide for the risk of any error which may be subsequently discovered and shall make no subsequent claim on account thereof.

18. In the event of the tender being submitted by a firm the tender must be signed separately and legibly by each partner or member of the firm or in their absence, by the person holding the power of Attorney on behalf of firm concerned. In the latter case, a copy of the power of Attorney duly attested by a Gazette Officer must accompany the tender.

19. If in any case, the date of Tender Opening falls on holiday, the Tender will be opened on the next working day.

20. **A**. Every tender must be accompanied by Earnest Money Deposit. This earnest money will be refunded to the unsuccessful tenderer after finalization of the award of work. In the case of successful tenderer, the earnest money will be retained as a part of Security Deposit for satisfactory completion of the work in accordance with Clause-16 of BHEL General Conditions of the Contract. Tenders without Earnest Money Deposit receipt are liable to reject. No interest will be paid on the earnest money deposit.

21. The Earnest money deposit may be furnished

a) Demand Draft in favour of BHEL EDN, Bangalore – 560026.

b) The Earnest money deposit may be furnished through online from SBI Collect.

Guidelines for payment of EMD Fee

Step-1: Please enter the following link in your internet address browser or click on the following link.
https://www.onlinesbi.com/sbicollect/icollecthome.htm
Please click on"proceed" after Clicking "Check Box" to proceed for payment
Step-2 : Now the SBI's SB-Collect site gets opened. Please select State of Corporation as " Karnataka" and type of Corporation as " Industry" and then click on "Go" appearing on the screen.
Step-3 : Now select " Bharat Heavy Electricals " from the dropdown table appearing against "Industry Name" and click Submit
Step-4: Now select " Others " from the dropdown table appearing against "Category" and click Submit

R.Palanikumar
Dy. Manager-Civil,BHEL-EDN

CONTRACTOR (SIGN & SEAL)

Step-5: The below screen (similar) will appear. Please select sub category “EMD” and fill up other details and transfer money.

22. For reimbursement of Earnest Money Deposit, the tenderer should fill the enclosed EFT form, obtain the Banker’s signature and also enclose a photocopy of cancelled cheque leaf.

23. Unless the bidder whose tender is accepted signs contract agreement within fifteen days (15 days) of the date of the order directing to do so, the amount of Earnest Money already deposited by bidder will be forfeited and acceptance of the tender withdrawn.

24. If after opening of tenders a tenderer revokes the tender or increase of earlier quoted rates or after acceptance of his tender does not commence the work in accordance with the instruction of Engineer-in-charge, the Earnest Money Deposited by bidder will be forfeited and acceptance of bidder’s tender withdrawn.

R.Palanikumar
Dy. Manager-Civil,BHEL-EDN

CONTRACTOR (SIGN & SEAL)

If only a part of work included in the tender had been awarded to the tenderer, the amount of Earnest Money to be retained will be based on value of the contract so awarded.

25. The BHARAT HEAVY ELECTRICALS LIMITED reserve the right to reject any or all the tenders received or accept any tender or part thereof without assigning reason thereof. In the case of acceptance of a part of tender, the time for completion may also be reduced to the extent considered necessary by the accepting authority.

26. Conditional and Unsigned tenders, tenders which are incomplete or otherwise considered defective, tenders which are not in accordance with the tender conditions laid down by the accepting officer and tenders not submitted in the prescribed forms are liable to be rejected.

27. Tenderer shall submit Solvency Certificate for the value specified from a Bank of standing regarding the tenderer's financial position.

28. The tenderers should enclose relevant documents regarding constitution of firm i.e. Individual / Sole Proprietorship Concern / Partnership Firm / Public Limited Company / Private Limited.

29. The tenders should be enclosed with a list of contracts already held by the tenderer at the time of submitting the tender and giving the following particulars:

    a) Name of the work, value and address.

    b) The balance work remaining to be done on the same.

30. a) The filled in tender sealed cover should be dropped in **Friday (SC&PV) Tender box** kept in the reception of BHEL-EDN, in case the sealed tender document is large and not possible to drop the same in the Tender box, it should be handed over at office of **SDGM ,SC&PV- Engg** before the time fixed for submission of tender.

    b) Tenders received after the due date & time of opening of tenders will be rejected.

31. The Contractors responsibility under this contract shall commence from date of receipt of the order or acceptance of tender.

32. Tenders submitted by speed post or courier service shall be posted with due consideration of any delay in postal delivery. Tenders received after the due date of opening tenders are liable to be rejected.

R.Palanikumar
Dy. Manager-Civil,BHEL-EDN

CONTRACTOR (SIGN & SEAL)

33. If proprietor or partner of a firm expires after the submission of tender or after the acceptance of tender, BHEL reserves the right to cancel the contract if the character of the firm undergoes a substantial change.

34. THE BHARAT HEAVY ELECTRICALS LIMITED will not be bound by any power of Attorney granted by the tenderer or changes in the composition of firm made subsequent to signing of the contract. They may however recognize such power of Attorney and changes after obtaining proper legal advice.

35. If the tenderer deliberately gives wrong information on tender regarding past unsatisfactory performance with BHEL sister units, BHEL reserves the right to reject such tender at any stage including contract execution period.

36. Words imparting the singular number shall also be deemed to include the plural number and vice-versa where the context so require.

37. The General and Special Conditions are complementary to each other and where they are in conflict, the special condition shall prevail.

38. The expenses for completing the stamping agreement shall be paid by the contractor.

39. Unless or otherwise stated above tendered work includes men, material, machine and commissioning of equipment as agreed to in the contract.

40. After completing of the job, the contractor has to furnish actual drawings of work done in consultation with Engineer-in-charge.

41. Any covering letter and comments of the tenderer should be submitted along with the offer.

42. Cement and steel for carrying out Civil Works will have to be procured by the Contractor. Materials shall be accompanied with Test certificates and connected dispatch documents for proof of source from approved manufacturer's works or stockyard. The Contractor shall provide all the materials needed for trial run, testing including chemicals, consumables etc. In quoting their rates, the Contractors are advised to take into account the cost of the above materials.

43. Contractor are required to follow Field Quality Plan (FQP) for Civil construction as approved by BHEL/customer in respect of Tests to be carried out and reports and documents to be furnished.

44. Should a tenderer or a contractor has a relative or in the case of firm or company, any of its shareholders relative is employed in Bharat Heavy Electricals Limited, the authority inviting tenders

R.Palanikumar
Dy. Manager-Civil,BHEL-EDN

CONTRACTOR (SIGN & SEAL)

shall be informed of this fact at the time of submission of the tender, failing which tender may be disqualified or if such fact subsequently comes to light.

45. These 'INSTRUCTIONS TO TENDERER' & GENERAL CONDITIONS OF CONTRACT OF BHEL' shall be deemed to form an integral part of the Contract agreement for the work to be entered into. The Contractor has to scrutinize the same, and when submitting his tender, indicate his acceptance of both. In cases of variation between the two in any matter, the conditions in the 'THE INSTRUCTIONS TO TENDERER' shall prevail. (Extracts of important clauses of BHEL GCC are enclosed).

46. All operations to be carried out by the Contractor during the execution of the contract such as drilling, welding etc., shall be done with proper equipment to be brought by the tenderer. Contractor shall make his own power and water supply.

47. The Contractor shall comply with the provision of Employees Provident Fund's and miscellaneous Provisions Act 1952 and rules, regulations and other orders issued there under. He as an employer shall be liable to pay employer's contribution/deductions towards PF under the PF Act in respect of all labour employed by him for the execution of the contract in accordance with the provisions of the Employees' Provident Funds and Miscellaneous Provisions Act, 1952 as amended from time to time. For this purpose he shall indicate the code number obtained from the Regional Provident Fund Commissioner or he should obtain a code number if he has not and produce the Photostat copy of the challan receipt of monthly remittance of the contribution made by him to the Commissioner. He shall also furnish such returns such returns as are due, under the Act, to be sent to the appropriate authorities through the Principal Employer".

48. The Contractor should get himself registered with the E.S.I Authorities as an independent Employer, obtain a separate code number and remit the dues in respect of the Labour employed by him for the work and produce the challan/Receipts of remittance of the ESI contributions due under the E.S.I Act to the Company authorities. He shall also furnish such returns, as are due, under the Act, to be sent to the appropriate authorities' through the Principal Employer. The contractor can remit their ESI & PF through a sub-agent who processes the ESI & PF code and agrees to enter an MOU with the contractor.

45. If any action is brought in by P.F. Commissioner/ESI authorities on BHEL for the work done by the Contractor for his labourers regarding PF/ESI amount due, short remittances, non-remittances etc., the Contractor shall defend the case on behalf of BHEL and / or reimburse BHEL the expenses so incurred.

R.Palanikumar
Dy. Manager-Civil,BHEL-EDN

CONTRACTOR (SIGN & SEAL)

46. The Contractor shall apply and obtain license under Contract labour (R&A) Act 1970 and comply the relevant provisions of this Act in respect of the labour employed by him for executing this contract. The contractor shall furnish necessary returns to the authority through the Principal Employer.

47. Contractor shall insure all his labourers and material. Any claim by his Employees for damages shall be settled by the Contractor even if action is against BHEL or to reimburse the legal expenses incurred by BHEL.

48. Any action brought in by anybody on BHEL regarding patent, right etc., used by Contractor in execution of work shall be defended by the Contractor and / or reimburse BHEL the cost of the same.

49. Contractor shall produce necessary records, documents; explanation whenever he is called upon to do by any Government Agencies.

50. Contractor should obtain "Workmen Compensation Policy" for their Employees.

51. LEAD, LIFT, DEWATERING ETC.,

a) Unless otherwise specified in the tender schedule, the rates for all items will be deemed to include all leads, lifts and descents involved in the work.

b) No separate payment will be made for dewatering (including seepage, surface drainage and monsoon water) desludging and allied operations at any stage of the work, and the cost of such operations will be deemed to be included in the contract rates.

c) No separate payment will be made for curing including pumping of curing water where ever necessary.

52. EXTRA ITEMS

No extra items of work shall be carried out by the contractor other than those authorized to do so in writing by the Engineer-in-charge. For any such items of work executed as per instructions of Engineer-in-charge, the rates will be fixed on the basis indicated under clause 50 of BHEL GCC. The schedule of rates to be followed in this case will be CPWD schedule of rates.

R.Palanikumar
Dy. Manager-Civil,BHEL-EDN

CONTRACTOR (SIGN & SEAL)

BHARAT HEAVY ELECTICALS LIMITED

(ELECTRONICS DIVISION)

MYSORE ROAD- BANGALORE-26

GENERAL CONDITIONS OF CONTRACT/TECHNICAL SPECIFIC ATION

It is hereby agreed by me/us that the BHEL General Conditions of Contract including subsequent amendments/ additions/deletions to clauses if any, and conditions pertaining the settlement of disputes by Arbitration form an integral part of the tender documents and that the tender submitted by me/ us is subject to the aforesaid BHEL General Conditions of Contract/ Technical Specification for Civil works which has been read and accepted by me/us.

R.Palanikumar
Dy. Manager-Civil,BHEL-EDN

CONTRACTOR (SIGN & SEAL)

ENCLOSURE: A

CLAUSE 20 OF GENERAL CONDITIONS OF CONTRACT

LABOUR

The Contractor shall employ labour in sufficient numbers either directly or through sub-contractors to maintain the required date of progress and of quality to ensure workmanship of the degree specified in the contract and to the satisfaction of the Engineer-in-charge. The contractor shall not employ in connection with the works any person who has not completed his eighteen years of age.

The contractor shall furnish to the Engineer-in-charge at the intervals specified by him. A distribution return of the number and description by trades of the work people employed on the works. The Contractor shall also submit on the 4th and 19th or every month to the Engineer-in-charge a true statement showing in respect of the second half of the preceding month and the first half of the current month (i) the accidents that occurred during the said fortnight showing the circumstances under which they happened and the extent of damage and injury caused by them and (ii) the number of female workers who have been allowed maternity benefits as provided in the maternity benefit Act, 1961 or Rules made there under and the amount paid to them.

The contractor shall pay to labour employed by him either directly or through sub-contractors wages not less than fair wages as defined in the contractors Labour Regulations.

The Contractor shall in respect of labour employed by him either directly or through sub- contractors comply with or cause to be complied by with sub-contractors, labour Regulations in regard to all matters provided therein.

The Contractors shall comply with the provisions of the payment of wages Act, 1936,Minimum Wages Act, 1948, Workmen's Compensation Act 1923, Industrial Disputes Act, 1947, Maternity Benefit Act 1961 or any modifications there of or any other law relating thereto and rules made there under from time to time.

The Contractors shall be liable to pay his contribution and the employees' contribution of the State Insurance Scheme in respect of all labour employed by him for the execution of the contract, in accordance with the provision of "The Employees', State Insurance Act, 1948", as amended from time

R.Palanikumar
Dy. Manager-Civil,BHEL-EDN

CONTRACTOR (SIGN & SEAL)

to time. The Contractors shall apply to the ESI Authorities, get himself registered with them and obtain a code Number. He shall pay the remittances under his code Number only. The Contractor shall be liable to pay his contribution and the Employees' contribution towards PF as per Provident Fund Rules and Regulations in respect of all labour employed by him for the execution of the contract.

The contractor shall apply to the PF Authorities, get himself registered and obtain a code number from them. He shall pay the remittances towards PF under his code Number only. The Engineer-in-charge shall on a report having been made by an Inspecting Officer as defined in the Contractors Labour Regulations have the power to deduct from the moneys due to the Contractor any sum required or estimated to be required for making good the loss suffered by a worker or workers by reason of non-fulfillment of the conditions of the contract for the benefit of workers, non - payment of wages or of deductions made from him or their wages which are not justified by the terms of the contract of non-observance of the said contractor's Labour Regulations.

The Contractors shall indemnify the BHEL against any payment to be made under and for observance of the regulation aforesaid without prejudice to his right to claim indemnity from these sub-contractors.

MODEL RULES FOR LABOUR WELFARE

The Contractor shall at his own expense comply with or cause to be complied with model Rules for Labour Welfare as appended to these conditions or rules framed by Government from time to time for the protection of health and for making sanitary arrangements for workers employed directly or indirectly on the works, In case the Contractors fails to make arrangements as aforesaid the Engineer-in-charge shall be entitled do so and recover the cost thereof from the contractor.

R.Palanikumar
Dy. Manager-Civil,BHEL-EDN

CONTRACTOR (SIGN & SEAL)

ENCLOSURE: B

SAFETY CODE

RESPONSIBILITIES OF THE CONTRACTOR IN RESPECT OF SAFETY OF MEN, EQUIPMENT, MATERIAL AND ENVIRONMENT

1. Before commencing the work, contractor shall submits a "SAFETY PLAN" to the authorized BHEL Official. The 'SAFETY PLAN' shall indicate in detail the measure that would be taken by the contractor to ensure safety of men, equipment, material and environment during execution of the work. The plan shall take care to satisfy all requirements specified hereunder. The contractor shall submit Safety Plan along with his offer. During negotiations before placing of work order and during execution of the contract BHEL shall have right to review and suggest modification in the Safety Plan. Contractor shall abide by BHEL decision in this respect.
2. The contractor shall take all necessary safety precautions and arrange for appropriate appliances as per direction of BHEL or its authorized officials to prevent loss of human lives, injuries to personnel engaged, and damage to property and environment.
3. The contractor shall provide to its work force and ensure the use of the following personal protective equipment as found necessary and as directed by the authorized BHEL Officer:-Safety Helmets conforming to IS-2925: 1984.

   (i) Safety Belts conforming to IS-3521: 1983.

   (ii) Safety Shoes conforming to IS-1989: 1978.

   (iii) Eye and Face protection devices conforming to IS-8520: 1977 and IS-8940: 1978.

   (iv) Hand and body protection devices conforming to:

   IS-2573: 1975

   IS-6994: 1973

   IS-8807: 1978

   IS-8519: 1977

All tools, tackles, lifting appliances, material handling equipment scaffolds, cradles, safety nets, ladders, equipment's etc. used by the contractor shall be of safe design and construction. These shall be

R.Palanikumar
Dy. Manager-Civil,BHEL-EDN

CONTRACTOR (SIGN & SEAL)

tested and certificate of fitness obtained before putting them to use and from time to time as instructed by authorized BHEL Official who shall have the right to ban the use of any item.

All electrical equipment's, connections and wiring for constructions power, its distribution and use shall conform to the requirement of the Indian Electricity Act and Rules. Only electricians licensed by the appropriate statutory authority shall be employed by the contractor to carry out all types of electrical works.

All electrical appliances including portable electric tools used by the contractor shall have safe plugging system to source of power and be appropriately earthed. The contractor shall not use any hand lamp energized by electric power with supply voltage of more than 24 volts. For work in confined space lighting shall be arranged with power sources of not more than 24 volts.

The Contractor shall adopt all fire safety measures as laid down in the "Code for fire Safety at Construction Sites" issued by the Safety Department of the Construction Management (HQ) of BHEL and as per directions of the authorized BHEL Official. A copy of the above referred "Code of Fire Safety at the Construction Sites" shall be made available by BHEL to the contractor for reference, on demand by the contractor, during tendering stage itself.

Where it becomes necessary to provide and/or store petroleum products, explosives, chemicals and liquid or gaseous fuel or any other substance that may cause fire or explosion, the contractor shall be responsible for carrying out such provisions and/or storage in accordance with the rules and regulations laid down in the relevant government acts, such as Petroleum Act, Explosives Act, Petroleum and Carbides of Calcium Manual of the Chief Controller of Explosives, Govt. of India. etc., prior approval to the authorized BHEL Official at the site shall also be taken by the contractor in all such matters.

The contractor shall arrange at his cost (wherever not specified) appropriate illumination at all work spots for safe working when natural daylight may not be adequate for clear visibility.

The contractor shall be held responsible for any violation of statutory regulations local, state or central and BHEL instructions that may endanger safety of men, equipment, material and environment in his scope of work or another contractor or agencies. Cost of damages if any, to life and property arising out of such violation of statutory regulations and BHEL instructions shall be borne by the contractor.

In case of a fatal or disabling injury accident to any person at construction sites due to the lapses by the contractor, the victim and/or his/her dependents shall be compensated by the contractor as per

R.Palanikumar
Dy. Manager-Civil,BHEL-EDN

CONTRACTOR (SIGN & SEAL)

statutory requirements. However, if considered necessary, BHEL shall have the right to impose appropriate financial penalty on the contractor and recover the same from payments due to the contractor for suitably compensating the victim and/or his/her dependents. Before imposing any such penalty, appropriate enquiry shall be held by BHEL giving opportunity to the contractor to present his case.

In case of any damage to property by the contractor, BHEL shall have the right to recover cost of such damages from payments from payments due to the contractor after holding an appropriate enquiry.

In case of any delay in the completion of a job due to mishaps attributable to lapses buy the contractor; BHEL shall have to recover cost of such delay from payments due to the contractor, after notifying suitably and giving him opportunity to present his case.

If the contractor fails to improve the standards of safety in its operation to the satisfaction of BHEL after being given a reasonable opportunity to do so; and/or if the contractor fails to take appropriate safety precautions or to provide necessary safety devices and equipment or to carry out instructions regarding safety issued by the authorized BHEL Official, BHEL shall have the right to take corrective steps at the risk and cost of the contractor after giving a notice of not less than seven days indicating the steps that would be taken by BHEL.

The contractor shall submit report of all accidents, fires and property damage, dangerous occurrence to the authorized BHEL Official immediately after such occurrence, but in any case not later than twelve hours of the occurrence. Such reports shall be furnished in the manner prescribed by BHEL. In addition, the contractor to the authorized BHEL Official shall also submit periodic reports on safety from time to time as prescribed.

Before commencing the work, the contractor shall appoint/nominate a responsible officer to supervise implementation of all safety measures and liaison with his counterpart of BHEL.

If safety record of the contractor in execution of the awarded job is to the satisfaction of Safety Department of BHEL, issue of an appropriate certificate to recognize the safety performance of the contractor may be considered by BHEL after completion the job

R.Palanikumar
Dy. Manager-Civil,BHEL-EDN

CONTRACTOR (SIGN & SEAL)

SPECIAL CONDITONS OF CONTRACT

1. GENERAL

The special conditions of contract and other contract documents are complimentary to each other and shall be read in conjunction with each other. In case of any conflict of meanings between the special conditions of contract and the BHEL General Conditions of Contract the provisions of the special conditions of contract shall override the corresponding provisions of the BHEL General Conditions of Contract.

2. SCOPE OF WORK

The scope of work includes for the full, final and entire completion jungle clearance, uprooting of vegetation and other associated works for GIPCL, 75 MWp(AC) Solar PV power plant at Charanka, Gujarat. as detailed in specifications and drawings, which forms part of this Contract. The scope of work also includes cleaning/removing all debris beyond **2 km** or as stipulated in the item schedule from drains, watch tower foundations and levelling the areas if any as per direction of the Engineer-in-charge. The scope of work under this contract shall cover supply of all materials, labour, tools, and plants etc., unless otherwise specified in the specifications, descriptions of items or in foregoing clauses.

3. SITE CONDITIONS

a) Before tendering the Contractor shall get themselves acquainted with site conditions such as the nature of soil likely to be encountered during the course of the work etc,. The rates quoted by the contractor shall be deemed to have been quoted after getting acquainted with the prevailing site conditions. Initial jungle clearance, stripping of top soil etc., shall also be included in the quoted rates. No claims on the pretext of ignorance of site conditions shall be entertained.

b) The site of work is as mentioned in the Tender document.

4. SITE FACILITES

A. LAND

The Employer will allot land as available free of cost to the contractor for his office stores. He must maintain the areas allotted to him in a neat and clean conditions as required by the Employer. The contractor shall provide adequate storage and office facilities with approval from the Engineer. The

R.Palanikumar
Dy. Manager-Civil,BHEL-EDN

CONTRACTOR (SIGN & SEAL)

rate quoted by the contractor shall be deemed to include for these and no separate payment will be made towards these. On completion of work, the site shall be cleaned by the contractor of all materials, temporary debris, rubbish plants and equipment's, belonging to the contractor at no extra cost. The site and surroundings shall be handed over in a neat and clean condition. In case of any failure by the contractor, the employer will get inside cleared at risk and cost of the Contractor.

B. POWER AND WATER SUPPLY

Facilities for drawing Power and water required at site for execution of the works shall be arranged by the contractor at his expense and risk. The necessary source for power & water supply has to be organized by vendor. Necessary distribution box, extension board points duly earthed, and with armoured safe power cables to be laid across the field provided point shall be in the scope of the tenderer. Further, laying of water intake and distribution pipes across the Site to various points of work from Electricity source provided water source point shall be in the scope of the tenderer. If required D.G generation sets shall be provided for Power arrangement by the contractor at his own cost. The tenderer shall make provision for temporary storage of water at suitable locations with pump if required to reach the water supply to work areas. The contractor will have to make his own arrangements for the same, without claiming any extra charge for the power and water drawal and distribution equipment.

5. MACHINERY

The Contractor shall at his own expense, supply all tools, plant and equipment (hereinafter referred to as T & P) required for execution of contract, as specified in the tender documents. whole of the works shall be executed in perfect conformity with the specifications and drawings. If contractor perform any works in a manner contrary to the specifications and drawings and without reference to the Engineer-in-charge, he shall bear all the costs arising or ensuring there from.

a) All technical documents regarding the construction of works are given in the metric system and work should be carried out according to metric system.

b) The work shall be carried out as per detailed drawings supplied by the employer. The working drawings shall be emailed progressively to the contractor free of cost. The contractor shall keep

R.Palanikumar
Dy. Manager-Civil,BHEL-EDN

CONTRACTOR (SIGN & SEAL)

one set of drawings (duly protected from dust and wear and tear) at his own expenses always available at site for reference of Engineer-in-charge and other representatives.

c) The works shall be carried out as per detailed specifications enclosed with the tender. For items for which there is no mention in the drawings, detailed specification relevant IS specification (latest edition) shall be followed.

d) The contractor shall submit to the Employer for their approval complete drawings, of all temporary works and staging which he may require for carrying out the works shown in the drawings.

He shall at the same time if so required by the Employer submit his calculations relating to strength and anticipated deflection in respect of any aforesaid temporary works. He shall also submit for the approval of Employer drawings showing the methods he proposes to adopt for the erection of the various parts of the temporary works. Any modification to the drawings that may be required by the Employer shall be made by the contractor at his own cost. However, notwithstanding the approval of modification required for temporary works, the contractor shall be fully responsible for their efficiency, security and maintenance and for all obligations and risks in regard to such works, specified or implied in this contract and be shall reinstate the same at his own cost, should any mishap or accident occur causing damage or injury there from, subject however, to such clauses of the General conditions as may be applicable in such cases.

6. <u>BENCH MARKS AND REFERENCE POINTS</u>

The contractor shall construct and maintain proper benchmarks and reference points of the inter section of all main walls, no separate payment shall be made for this and rates quoted deemed to include this cost. Surveying where ever required is in contractor scope.

7. <u>SAFETY PRECAUTIONS</u>

The contractor shall at times observe the safety code and make necessary action as required in the tender. In default thereof, the employer may get this done departmentally or through other agencies and recover the cost from the contractor.

The Contractors shall also abide by all the security regulations promulgated from time to time by employer.

R.Palanikumar
Dy. Manager-Civil,BHEL-EDN

CONTRACTOR (SIGN & SEAL)

8. RATES

The rates to be quoted are intended to provide for works duly and properly completed in accordance with the general and special conditions of contract and specifications and drawings together with such alteration and/or conditions as may be required / ordered without prejudice to the generality thereof shall include for detail of construction which are obviously and fairly intended and which

may not have been specifically referred in these documents and working drawings and but are essential for execution and satisfactory completion of work including those of minor nature and shall be deemed to include and cover internal the followings.

a) Arrangements for obtaining the clearance wherever required from statutory bodies, regarding license for construction, permanent electricity, water supply, and sanitary connections including payment of necessary fees, inspection charges and obtaining financial certificates for using these services.

   The various items rates quoted in the schedule as applicable shall be deemed to include the above services and no separate payments shall be made towards these.

b) The cost of all superintendence and labour materials, tools, plants, equipment's, mobilizing and demobilizing equipment fuel lubricants, fixture, transport charges, temporary and permanent works and quarrying charges, testing, screening, washing, handling of materials, stacking and removal charges, of any rejected materials and water and power arrangements and satisfactory maintenance of the same satisfactory completion of the work intended.

c) All fees, duties, royalties, rent and compensation to owner for surface damage or taxes and impositions payable to local authorities, in respect of land an structure, for all materials supplied for the work or any other duties/expenses for which the contractor may become liable or may be put to under any provision of the law for the purpose of in connection with the execution of the contract including levies payable on the transactions.

d) Settings out of works profiles etc., and of construction repair and up-keep of all centre lines, bench marks and levels and page there of including provisions of masonry/concrete pillars showing the centre line of structure/gridlines and levels and maintenance and protection of the some including providing fencing etc., throughout the period of contract.

e) Breaking, maintenance and removal of temporary works and buildings.

R.Palanikumar
Dy. Manager-Civil,BHEL-EDN

CONTRACTOR (SIGN & SEAL)

f) Supply of complete, Moulds, cost of testing of materials etc.

g) Working in all conditions including in/under water liquid, conditions etc., and shall also include bailing or pumping out water from the foundations, basements or any other sources of whatsoever de-sludging and allied operation at any stage of work including all suspension period and delays whatsoever. Cost of curing including pumping and cost of water whatever necessary.

h) In the interest of completion of work within the stipulated time, certain works are to be carried out during the monsoon period also. No separate payment will be made to the contractor for such works and it will be deemed to be included in the contract rates.

i) Diversion and draining works, protection works, temporary facilities, bridges, gangway.

j) Work at all depth in foundation below the ground level and in superstructure up to all height above ground level including all lifts and distances involved at any other place of work and disposed/barrow areas.

k) Unless otherwise specified in the specification schedule cost of all leads/lifts etc.

l) Provision of centering, scaffolding, strutting props etc.,

m) All materials and labour required for fencing in a protection against risk of accidents and for providing necessary/planking strutting with hand rails, gumboots, helmets, safety belts etc., during the progress of work.

n) Prevention on trespassing by providing barrier arrangements for the safety of the public or employees during the provision of works.

o) Works in all shapes include and curved all sizes as shown are as required.

p) Cleaning the site after the completion of work all debris, left out construction materials machine equipment's, temporary offices, stores, works shop etc., including dressing the area neat and clean shape.

q) Such other incidental charges or contingencies as may have been provided for in the specifications.

9. <u>LABOUR COLONIES</u>

Labour camp will not permitted within the project premises.

R.Palanikumar
Dy. Manager-Civil,BHEL-EDN

CONTRACTOR (SIGN & SEAL)

10. ESCALATION

The rates to be quoted by the tenderer shall be firm and shall cover and include all statutory levies, arising from, acts passed by parliament or by state legislature, the rates shall further be deemed to include statutory levies arising from such Acts, Central or State, which may come in to force subsequent to submission of tenders. The tenderer shall note that no claim for enhancement of rates, on the ground that existing statutory levies have been increased, or that new statutory levies have come in to effect after tender, or on any other ground, will be entertained on any account.

11. QUANTITY

The probable quantities of the several items of work are furnished in the schedule of quantities. It must be clearly understood that neither the probable quantities nor the value of individual items nor the aggregate value of the entire work shall be binding on the Employer/Engineer does not in any way assure the contractor or Guarantee that the said probable quantities are correct or that the work will correspond to these. The Employer/Engineer reserve the right to omit, vary or add to the item/work described in the schedule, of quantities and no claim for compensation will be entertaining on this account.

12. VARIATION/DEVIATION IN QUANTITIES

The contractor shall not make any alteration in addition to or omission from the work as described in the tender document except in pursuance of the written instructions of the Engineer-in-charge. No such deviation from the work described in the tender documents shall be valid unless the same has been specifically confirmed and accepted by the accepting officer in writing and incorporated in the contract. The rates quoted are firm for deviation subject to minimum of (-) 20% and maximum (+) 20% of the total value of work awarded. Deviation beyond the above limits is subject to the standard terms and conditions of BHEL.

13. MATERIALS

BHEL will not supply any materials unless otherwise specified.

14. SUPPLY OF CEMENT, STEEL , PAINT AND OTHER CONSTRUCTION MATERIALS, IS TO BE MADE BY CONTRACTOR

Makes / Source of supply of cement, steel, paint and other construction materials shall be as per approval of BHEL/GIPCL.

15. SUPPLY BY CONTRACTOR

R.Palanikumar
Dy. Manager-Civil,BHEL-EDN

CONTRACTOR (SIGN & SEAL)

The work is for a completed job including labour and supply of all materials except those otherwise specified in the bid document.
The material and works shall be subject to inspection and test as per field quality plan (FQP) duly approved by BHEL/ GIPCL

All materials supplied by the contractor according to the contract conditions shall be subject to inspection and passing by the Engineer-in-charge or his representatives from time to time, the contractor providing all facilities for such instruction free of cost.

BHEL officers connected with the contract shall have the power at any time to inspect and examine any stores or materials intended to be used in or on the work, whether on the site or at any factory or workshop or other place where such stores or materials are being fabricated or manufactured or at any place the same are lying and the contractor shall give necessary facilities for such inspection and examination.

The Engineer-in-charge shall be entitled to have tests made of any stores or materials supplied by the contractor shall provide at his own expense all facilities which the Engineer-in-charge may require for this purpose. If at the discretion of the Engineer-in-charge an independent expert is employed to make any such tests his charges shall be borne by the contractor only if the tests disclosed that the said stores or materials are not in accordance with the provision of the contract.
Should the Engineer-in-charge/Civil Engineer consider at any time during the construction or reconstruction on prior to the expiry of the Maintenance Period that the stores or materials provided by the contractor are unsound or of quality inferior to that contracted for, or otherwise not in accordance with the contract (in respect where the decision of the Engineer-in-charge/Civil Engineer shall be final and conclusive) the contractor shall on demand, in writing from the Engineer-in-charge specifying the stores or materials complained of, not with-standing that the same may have been inadvertently passed, certified that and paid forth with remove the stores or materials so specified and provide other and suitable stores or materials at his own expense, to the entire satisfaction of the Engineer-in-charge/Civil Engineer and in the event of his failing to do so within a period to be specified by the Engineer-in-charge/Civil Engineer, in his demand aforesaid, the Engineer-in-charge/Civil Engineer may replace within the other stores or materials complained of at the risk and expense in all respect of the contractor.

The liability of the contractor under this conditions, shall not extend beyond the maintenance period aforesaid except as regards stores or materials which the Engineer-in-charge/Civil Engineer shall have previously given notice to the contractor to replace (Maintenance period for any work under this organization will be six months from the date of actual completion of the particular work and handing over to BHEL).

R.Palanikumar
Dy. Manager-Civil,BHEL-EDN

CONTRACTOR (SIGN & SEAL)

16. INTERRUPTION TO THE WORKS

While quoting the rates/prices the Contractor should take in to account the fact that due to the design or other stipulations at site, or the necessity to follow a particular sequence of overall construction operation, or non-supply of particular drawings, or the connected work or other reasons, interruptions are likely to be encountered in a work of this nature and magnitude. No claims for such interruptions will be entertained on any account.

17. EXTENSION OF TIME OR PENALTY/LIQUIDATED DAMAGES

Extension of time or penalty/liquidated damages as the case may be will be determined as stipulated in clause 7, 9 and 41 of BHEL General Conditions of Contract.

18. COMPLETION OF WORK AND MEASUREMENT

a) All work shall be carried out according to authorized dimensions and measurement will be restricted to those authorized dimension even though the Contractor may for convenience of this work exceed the authorized dimensions.

b) All work shall be measured in accordance with the applicable standard method of measurements prescribed by the Indian Standard Institution (1200 latest edition) unless otherwise specified.

c) The Contractor shall admit for technical inspection, works which are likely to be embedded or covered by other works and have the necessary measurement books and certificates to this effect duly signed by the Engineer before the works are covered.

d) On completion of the work, the Contractor must submit to the Engineer the following documents for passing of works.

   i) A copy of the working drawing showing there on all addition and alterations in the process of execution.

   ii) A certificate for embedded and covered up works as in sub-para (C) above

e) The authorized Contractors representative and a representative of the Employer shall jointly sign a certificate of handing over any completed work and date of signature of that certificate will be that the date from which the maintenance period of that unit will reckoned.

f) Notwithstanding the above, insurance cover has to be taken by the contractor for the full value of work as also for the duration of the contract period. 50% of the Security Deposit shall be released only on the total completion of the building and handing over to BHEL to their satisfaction. Remaining 50% of Security Deposit shall be released subject to the stipulation in BHEL's GCC after 6 months from the date of completion of the building.

R.Palanikumar
Dy. Manager-Civil,BHEL-EDN

CONTRACTOR (SIGN & SEAL)

19. MAINTENANCE OF WORK

The contractor will be responsible for the maintenance of works during the period of construction until the various items are taken over, and for a further period of six months, from the date of taking over.

If the contractor fails to maintain the building satisfactorily, it will be got done by other agency and cost towards such maintenance together with departmental charges will be recovered from his bills/dues.

20. SECURITY DEPOSIT

Upon acceptance of the tender, the successful tenderer shall remit the security deposit with Bharat Heavy Electricals Ltd within the time as specified in the Letter of Intent.
The rate of Security Deposit will be 5% of work order value.

The contractor should submit the Security Deposit before the start of the work by

i) Cash (as permissible under the income Tax Act).

ii) Pay order, demand draft in favour of BHEL.

iii) Local cheques of scheduled banks, subject to realization.

iv) Securities available from Post Offices such as National Saving Certificates, Kisan Vikas Patras etc.,(Certificate should be held in the name of contractor furnishing the security and duly pledged in favour of BHEL and discharged on the back).

v) Bank Guarantee from scheduled Banks/Public financial Institutions as defined in the companies Act subject to a maximum of 50% of the total security deposit value. The balance 50% has to be remitted either by cash or in the other form of security. The Bank Guarantee format should have the approval of BHEL.

vi) Fixed Deposit Receipt issued by scheduled Banks/Public Financial Institutions as defined in the Companies Act. The FDR should be in the name of the contractor, A/C BHEL, duly discharged on the back.

vii) Security Deposit can also be recovered at the rate of 10% from the running bills. However in such cases at least 50% of the Security Deposit should be collected before start of the work and balance 50% may be recovered from the running bills.

viii) EMD of the successful tenderer shall be converted and adjusted against the Security Deposit. The Security Deposit shall not carry any interest.

R.Palanikumar
Dy. Manager-Civil,BHEL-EDN

CONTRACTOR (SIGN & SEAL)

NOTE: Accepting of Security Deposit against Sl. No. (iv) and (vi) above will be subject to hypothecation or endorsement on the documents in favour on BHEL. However, BHEL will not be liable or responsible in any manner for the collection of interest or renewal of the documents or in any other matter connected therewith.

For extra items of work and deviated quantities, security deposit will be recovered at 10% of the value of deviated amount. The security deposit will be released as stipulated under clause 16(IV) of GCC.

21. RUNNING ACCOUNT PAYMENTS

During execution of work, monthly payments of all works in place will be made on the basic measurements recorded in measurement sheet/book in respect of items executed but no claim on the account will be entertained, if for any reason payments are not so made.

22.1 MOBILIZATION ADVANCE

Mobilization advance not exceeding 5% of work order value excluding taxes & duties or 5% of the estimated cost put to tender whichever is less will be given, if requested by the contractor in writing within one month of the order to commence the work. The advance will be released against executing a bank Guarantee Bond by the contractor from a Scheduled Nationalized Bank as specified by the Engineer-in-charge for the full amount of such advance is released. The contractor has to furnish a proof of the satisfactory utilization of the advance released by the company.

22.2 INTEREST & RECOVERY

The mobilization advance above bear simple interest at the prime lending rate of SBI plus 2% per annum and shall be calculated from the date of payment to the date of recovery, both days inclusive, on the outstanding amount of advance. Recovery of such sums advanced will be recovered by installments through deduction from the contractor's bills at 10% of the bill value till the full advance is recovered.

The said bank guarantee for advances shall initially shall be made for the full amount and valid for the contract period, and be kept renewed from time to time to cover the balance amount and likely period of complete recovery together with interest.

23. Statutory Deduction towards Income Tax will be made as per rules.

24. In respect of all labour directly or indirectly employed on the work by the Contractor, the Contractor shall comply with the provisions of the contract labour (Regulation and Abolition) Act 1970 or any amendment thereof and all legislations and rules of the State and or Central Government or other Authority, framed from time to time governing the protection of health, sanitary arrangements, wages, welfare and safety for labour employed on building and construction works. The rules and other statutory obligations with regard to fair wages, welfare and safety measures, maintenance of the register etc., will be deemed to be part of the contract.

R.Palanikumar
Dy. Manager-Civil,BHEL-EDN

CONTRACTOR (SIGN & SEAL)

25. The Contractor is required to take insurance for all workers employed on works towards payment for workmen compensation. The insurance has to be taken out within 15 days of the award of work and has to be produced at the time of signing agreement. Half (1/2%) shall be deducted for every bill if the contractor fails to produce a proof of having taken such an insurance to cover his workmen. However the contractor shall be fully responsible for all the consequences arising out of such default. This may also be read with clause 20 of BHEL GCC.

25. TIME OF COMPLETION

The date of commencement of work shall be counted from the date of handing over the site to the contractor. It may be clearly understood that time is the essence of the contract and the entire work should be completed within the time imposed in the tender document letter of intent.

26. The Contractor has to pay the Works Contract Tax (Under relevant section of the State Government Act) of their own on Monthly basis.

27. The management of BHEL shall be at liberty to terminate the contract by issuing a month's notice to the contractor without assigning any reason what so ever. As regards unsatisfactory performance or noncompliance with any of the terms & conditions of the contract by the contractor. The management of BHEL shall have the right to terminate the contractor forthwith without notice & rearrange the balance work through other agencies at the risk & cost of the contractor & under such circumstances, the Earnest Money Deposit/Security Deposit paid by the contractor shall stand forfeited.

28. SPECIAL CONDITIONS OF TENDER

i) The successful bidder should open local office for Technical staff/Administrative group at Bangalore City for easy interactions/ monitoring of work at site./ Attend meetings at Bangalore city/site as and when instructed by BHEL.

ii) Tenderers should not disclose any price bid details/discounts in the technical bids.

iii) The successful bidder should construct site office / toilets for their workmen at site in consultation with Engineer-in-charge.

29. WORKMEN COMPENSATION POLICY

The contractor is required to take Insurance for all the workers employed on the works towards payments for workmen compensation. The Insurance has to be taken out within 15 days of the award of work and has to be provided at the time of signing the agreement. Half percent (0.5%) of the amount shall be deducted from every bill if the contractor fails to produce a proof of having taken such an insurance to cover his workmen. However the contractor shall be fully responsible for the consequences arising out of such default.

R.Palanikumar
Dy. Manager-Civil,BHEL-EDN

CONTRACTOR (SIGN & SEAL)

LIST OF INDIAN STANDARD

Following is the list of various Indian Standards,
Relevant to the Civil Engg., work

---

1. EARTH WORK

i) IS 1200-1992, Method Part I Earthwork, Measurement of Building, and Civil Engineering works, and chapter No.2 of CPWD/specification 1977.

2. MORTAR (PLASTERING)

1) IS 2394-1984: Code of practice for application of lime plasters finish.
2) IS 1661-1972: Code of practice for application of cement lime plasters finish.
3) IS 2402-1963: Code of practice for external rendered finishes.

3. CONCRETE WORK & RCC WORK

1) IS 456-2000: Code of practice for plain and reinforced concrete.
2) IS 432(part 1) –1982(Third Revision): Mild steel and medium tensile steel bars
3) IS 1766-1998: Cold twisted steel bars for concrete reinforcement.

4. BRICK WORK

1) IS 2212-1991: Code of practice for brick work.

5. STONE WORK

1) IS 1597-1992 (Part – I & II): Code of practice for construction of stone masonry.

6 MARBLE WORK

1) IS 1124-1974: Methods of test for water absorption of natural building works.

7. STEEL WORK

1) IS 800-2007(Third Revision): Code of practice for use of structural steel in general building construction.
2) IS 1308-1984: Steels doors, windows and ventilators
3) IS 1081-1960: Code of practice for fixing glazing of metal (steel & aluminium doors, windows & ventilators)
4) IS 1161-1998: Steel tubes for structural purposes.
5) IS 4351-2003: Steel doorframes.

R.Palanikumar
Dy. Manager-Civil,BHEL-EDN

CONTRACTOR (SIGN & SEAL)

6) IS-6245-5245-1971: Metal rolling shutters and rolling grills.

8. FLOORING

1) IS 2114-1984: Code of practice for laying in situ terrazzo floor finish.
2) IS 2571-1970: Code of practice for in situ cement concrete flooring.
3) IS 5318-1969: Code of practice of lying of flexible P.V.C. sheet & tiles flooring.

9. ROOFING

1) IS 3007(pt-I)-1999: Code of practice of lying of corrugated cement sheets.

10. FINISHING

1) IS 133-2004: Enamel, Interior (a) under coating (b) Finishing colour as required.
2) IS 348-1968: French Polish.
3) IS 427-2005: Distemper, dry colour as required.
4) IS 425-1969: Distemper, oil emulsion as required.
5) IS 5410-1992: Cement paint, Colour as required.
6) IS 5411 (pt.1)-1974: Plastic emulsion paint for interior use.
7) IS 6278-1971: Code of practice for white washing & color washing.

11. DEMOLISION AND DISMANTILING

1) IS 1200 (pt. 18)-1974: Method of measurements of demolition and dismantling.

12. SAFETY CODE

1) IS 5916-1970: Safety code for construction including use of hot bituminous materials.
2) IS 4130-1991: Safety code for demolition of building.
3) IS 3754-1966: Safety code for excavation works.
4) IS 3696(Pt-1)-1987: Safety code for Scaffolds.

A) DISTEMPERING ON NEW SURFACE. (OILBOUND)

1. COAT OF PRIMER	….	0.07 Litre/Sq.m (one coat)
2. COAT OF DISTEMPER	…..	0.10 Kg/Sq.m (2 coats)

DISTEMPERING WITHOUT PRIMER

FOR 1 COAT	……	0.10 Kg/Sq.m (For 1 coat)
FOR 2 COATS	…….	0.15 Kg/Sq.m (For 2 coats)

R.Palanikumar
Dy. Manager-Civil,BHEL-EDN

CONTRACTOR (SIGN & SEAL)

B) SYNTHETIC ENAMEL PAINT.

a) ON NEW SURFACE … PRIMER …. 0.09 Litre/Sq.m (For1 coat)

ENAMEL PAINT (2 COATS) …. 0.15 Litre/Sq.m (For 2 coats)

b) ON OLD SURFACE

2 COATS WITHOUT PRIMER … 0.20 Litre/Sq.m

1 COAT … 0.10 Litre/Sq.m

c) WATER PROOF CEMENT PAINT

1 COAT … 0.18 Kg/Sq.m

2 COAT … 0.30 Kg/Sq.m

d) PLASTING EMULSION PAINT:

2 COATS OF PLASTIC EMULSION …. 0.09 Litre/Sq.m

1 COAT OF PLASTIC EMULSION …. 0.073 Litre/Sq.m

ON NEW SURFACE

1 COAT PLASTIC FIX PRIMER … 0.081 Litre/Sq.m

2 COATS PLASTIC EMULSION … 0.09 Litre/Sq.m

These standards are indicative, any additional IS standard/specification required to be followed shall be adhered to by the contractor.

R.Palanikumar
Dy. Manager-Civil,BHEL-EDN

CONTRACTOR (SIGN & SEAL)

FORM OF TENDER

Having examined the invitation to bid, Instructions to Bidder, General conditions of contract, Special conditions, Specifications tender schedule, Contract drawings and other documents for the above work, we the undersigned, offer to construct, erect complete and maintain the whole of the said in conformity with the said bid documents on the terms and conditions and under the provisions set out or called for in the contract documents at the rates listed in the schedule of unit prices or elsewhere in the contract documents.

We undertake if our bid is accepted, to commence the works within 7 days from the date of issue of award and to complete and delivery the whole of the works comprised in the contract as per the time schedule agreed to the contract document.

We agree to abide by this bid for the period of three months from the date fixed for receiving the same and it shall remain binding upon us and may be accepted at any time before expiry of the period.

Until and unless a formal agreement is prepared and executed this bid, together with your award thereof shall constitute a binding contract between us.

R.Palanikumar
Dy. Manager-Civil,BHEL-EDN

CONTRACTOR (SIGN & SEAL)

ENCLOSURE: C

CLAUSE 58 OF GENERAL CONDITIONS OF CONTRACT

ARBITRATION:

Except where otherwise provided for in the contract all questions and disputes relating to the meaning of the specifications, designs, drawings and instructions herein before mentioned and as to the quality of workmanship or materials used on the work or has been other as to any other questions, claim, right, matter or thing whatsoever in any way arising out of or relating to the contract, designs, drawings, specifications, estimates, instructions, orders or these conditions or otherwise concerning the works, of or the execution or failure to execute the same whether arising during the program progress of the work or after the completion or abandonment thereof shall be referred to the sole arbitration of the Executive Director/General Manager of BHEL and if the Managing Executive Director/General Manager Chief Engineer is unable or unwilling to act, to a as the sole arbitration of some other person appointed by the Executive Director / General Manager, willing to act as such Arbitrator. There will be no objection if the arbitrator so appointed is an employee of BHEL EDN or an employee of any other unit of BHEL and that he had to deal with the matters to which the contract relates and that in the course of its his duties as such he had expressed views on all or any of the matters in dispute or difference. The Arbitrator to whom the to matter is originally referred being transferred or by vacating his office or being unable to act for any reason, such Executive Director / General Manager as aforesaid at the time of such transfer, vacation of office or inability to act, shall appoint account another person to act as arbitrator in accordance with the terms of the contract, such person shall be entitled to proceed with the reference from the stage at which it was left by his predecessor. It is also a term of this contract that no person other than a person appointed by such Executive Director/General Manager or an employee appointed as arbitrator as aforesaid should act as arbitrator and the arbitrator shall give reasons for the award.

Subject as aforesaid the provision of the Arbitration Act, 1940 or any statutory modification or re-enactment thereof and the rules made there under and for the time being in force shall apply to the arbitration proceeding under this clause.

R.Palanikumar
Dy. Manager-Civil,BHEL-EDN

CONTRACTOR (SIGN & SEAL)

It is a term of a contract that the party involving invoking arbitration shall specify the dispute or disputes to be referred to arbitration under this clause together with the amount or amounts claimed in respect of each such dispute.

The arbitrator(s) may from time to time with consent of the parties enlarge extend the time, for making the publishing the awards.

The work under the contract shall, if reasonably possible, continue during the arbitration proceeding and no payment due to or payable to the contractor shall be withheld on account of such proceedings.

The arbitrator shall be deemed to have entered on the reference on the date he issued notice to both the parties fixing the date of the hearing.

The arbitrator shall give a separate speaking award in respect of each dispute or difference referred to him.

The venue of arbitration shall be such place as may be fixed by the arbitrator in his sole discretion.

The award of the arbitrator shall be final, conclusive and binding on all parties to this contract.

R.Palanikumar
Dy. Manager-Civil,BHEL-EDN

CONTRACTOR (SIGN & SEAL)

Annexure - I

Certificate by Chartered Accountant on letter head

This is to Certify that M/S ....., (hereinafter referred to as 'company') having its registered office at ..... is registered under MSMED Act 2006, (Entrepreneur Memorandum No (Part–II) ..... dtd:....., Category: ..... (Micro/Small)). (Copy enclosed).

Further verified from the Books of Accounts that the investment of the company as per the latest audited financial year ..... as per MSMED Act 2006 is as follows:

1. **For Manufacturing Enterprises:** Investment in plant and machinery (i.e. original cost excluding land and building and the items specified by the Ministry of Small Scale Industries vide its notification No.S.O.1722(E) dated October 5, 2006 :
   Rs.....Lacs
2. **For Service Enterprises:** Investment in equipment (original cost excluding land and building and furniture, fittings and other items not directly related to the service rendered or as may be notified under the MSMED Act, 2006:
   Rs.....Lacs

(Strike off whichever is not applicable)

The above investment of Rs.....Lacs is within permissible limit of Rs.....Lacs for .....Micro / Small **(Strike off which is not applicable)** Category under MSMED Act 2006.

Or

The company has been graduated from its original category (Micro/ Small) **(Strike off which is not applicable)** and the date of graduation of such enterprise from its original category is ..... (dd/mm/yyyy) which is within the period of 3 years from the date of graduation of such enterprise from its original category as notified vide S.O. No. 3322(E) dated 01.11.2013 published in the gazette notification dated 04.11.2013 by Ministry of MSME.

Date:

(Signature)

Name -

Membership number -

Seal of Chartered Accountant

R.Palanikumar
Dy. Manager-Civil,BHEL-EDN

CONTRACTOR (SIGN & SEAL)

ANNEXURE II

Electronic Funds Transfer (EFT) OR
Paylink Direct Credit Form

Please Fill up the form in **CAPITAL LETTERS** only.
TYPE OF REQUEST(Tick one): _____ CREATE _____ CHANGE

BHEL Vendor / Supplier Code:
Company Name :
Permanent Account Number(PAN):
Address

City: _____ PINCODE _____ STATE _____

Contact Person(s)
Telephone No:
Fax No:
e-mail id:

1 Bank Name:
2 Bank Address:

3 Bank Telephone No:
4 Bank Account No:
5 Account Type: Savings/Cash Credit
6 9 Digit Code Number of Bank and branch appearing on MICR cheque issued by Bank
7 Bank swift Code(applicable for EFT only)
8 Bank IFSC code(applicable for RTGS)
9 Bank IFSC code(applicable for NEFT)

A I hereby certify that the particulars given above are true, correct and complete and that I, as a representative for the above named Company, hereby authorise BHEL, EDN, Bangalore to electronically deposit payments to the designated bank account.

B If the transaction is delayed or not effected at all for reasons of incomplete or incorrect information, I would not hold BHEL / transfering Bank responsible.

C This authority remains in full force until BHEL, EDN,Bangalore receives written notification requesting a change or cancellation.

D I have read the contents of the covering letter and agree to discharge the resposibility expected of me as a participant under ECS / EFT.

Date:

Authorised Signatory:
Designation: Telephone NO. with STD Code

Company Seal

Bank Certificate

We certify that_____has an Account No_____ with us and we confirm that the bank details given above are correct as per our records.

Date: (.....)
Place: Signature

Please return completed form along with a blank cancelled cheque or photocopy thereof to:
Bharath Heavy Electricals Ltd,
Attn:
Electronics Division, Mysore Road,
BANGALORE - 560 026
In case of any Querry, please call : 080-26998xxx / 2674xxxx or fax no. 080-2674xxxx

R.Palanikumar
Dy. Manager-Civil,BHEL-EDN

CONTRACTOR (SIGN & SEAL)

ANNEXURE-III

Ref.
Date:

SITE INSPECTION CERTIFICATE

This is to Certify that, I / We…….

……. had inspected the proposed

Construction site thoroughly and understood the scope of works to be carried out in

line with construction drawings/designs/data/Bill of quantities/schedule of items /

Specifications as brought out in the Tender as desired by BHEL.

Agreeable to all Terms & Conditions of Contract and assure to complete the work

Within the stipulation time frame.

Signature of the contractor

Name:
Seal

R.Palanikumar
Dy. Manager-Civil,BHEL-EDN

CONTRACTOR (SIGN & SEAL)

Additional Clauses for GST :

1. BHEL GST Number of Nodal Agency:

   Nodal Unit Registered as Supplier of Goods/Services in GST: BHEL- PSWR, Gujarat
   GSTIN of Nodal Unit: 24AAACB4146P2ZL

2. HSN (Harmonized System of Nomenclature) / SAC (Services Accounting Code) to be mandatorily mentioned in all quotations & invoices submitted.

3. Invoice submitted should be in the format as specified under GST Laws viz. all details as mentioned in Invoice Rules like GSTN registration number, invoice number, quantity, rate, value, taxes with nomenclature – CGST, SGST, IGST mentioned separately, HSN Code / SAC Code etc

4. Payment of GST to vendors as applicable will be made only if it is matching with data uploaded by Vendors

5. Vendors to give undertaking that GST as mentioned in the Invoice has been paid/will be paid either through cash or admissible input credit and also file the returns

6. For invoices paid on Reverse charge basis – that it is “payable on reverse charge basis” to be mentioned on the invoice.

7. With respect to supplies, vendor should intimate BHEL immediately on dispatch for parallel billing on customer

R.Palanikumar
Dy. Manager-Civil,BHEL-EDN

CONTRACTOR (SIGN & SEAL)

UNPRICE BID
FOR MMS PILLING , STRUCTURAL ERECTION & LAND LEVELLING WORKS OF 75 MWp(AC) SOLAR POWER PLANT FOR GIPCL AT CHARANKA, GUJARAT

S.NO	DESCRIPTION	UNIT	QTY	RATE	AMOUNT
1	Boring with DTH/drilling machine in any kind of soil/rock, providing and installing bored cast-in-situ reinforced cement concrete piles of grade M-25 of specified diameter and length below the pile cap, to carry a safe working load not less than specified, excluding the cost of steel reinforcement but including the cost of boring, with bentonite solution and temporary casing of appropriate length for setting out and removal of same and the length of the pile to be embedded in the pile cap etc. all complete, including removal of excavated earth with all lifts and leads & pile marking (Length of pile for payment shall be measured upto bottom of pile cap). 300mm dia pile	RM	77123.00	x	x
2	Centering and shuttering including strutting, propping etc. and removal of form for Foundations, footings, bases of columns, etc. for mass concrete	Sqm	9687.00	x	x
3	Providing and laying in position machine batched and machine mixed design mix M-25 grade cement concrete for reinforced cement concrete work, using cement content as per approved design mix, including pumping of concrete to site of laying but excluding the cost of centering, shuttering, finishing and reinforcement, including admixtures in recommended proportions as per IS: 9103 to accelerate, retard setting of concrete, improve workability without impairing strength and durability as per direction of Engineer-in-charge All works upto plinth level for collar of MMS of Apprx 150mm Ht	Cum	726.00	x	x
4	Erection of Columns Erection and Alignment of structure legs (Columns) in plumb, as per the Co-ordinates of BHEL MMS coordinate drawing, inside pile foundation before pouring of concrete complete in all respect including template etc,collecting of columns material from store,shifting to work location,unpacking, disposal of unwanted packing material at identified location complete all. (SUPPLY OF COLUMN MATERIAL IS IN BHEL SCOPE)	Tonnes	900.00	x	x
5	Erection of Structure material using required fasteners as per BHEL GA-Drawing.Assembly to mentioned inclinated angle ,tightening of accessories using tools at mentioned torque including collecting structure material from store,shifting to work location,unpacking, disposal of unwanted packing material at identified location complete all.(weight of erection bolts, nuts not payable) (SUPPLY OF STRUCTURE MATERIAL AND HARDWARE IS IN BHEL SCOPE)	Tonnes	3000.00	x	x
6	Erection of modules,placing,tightening using tools at mentioned torque..(size approximately 1966 x 986 x 35 mm, App. Weight: 25 kg). including Erection bolts & nuts of grade SS316 as per drawing and collecting module from BHEL STORE unpacking,shifting to work location lead upto 2 KM, disposal of unwanted packing material at identified location (BHEL WILL SUPPLY PV MODULES & FASTENERS) complete all.	Nos	293800.00	x	x
7	Earth work in excavation by mechanical means (Hydraulic excavator) / manual means over areas (any depth. 1.5m in width as well as 10 sqm on plan) including disposal of excavated earth, lead upto 2 km within plant premises and lift upto 1.5m, disposed earth to be levelled, rolled/neatly dressed as per direction of Engineer-in -charge.all kind of soil	cum	298253.00	x	x
8	Earth work in excavation by mechanical means (Hydraulic excavator) / manual means over areas (any depth. 1.5m in width as well as 10 sqm on plan) including disposal of excavated earth, lead upto 2km within plant premises and lift upto 1.5m, disposed earth to be levelled and neatly dressed.Ordinary rock	cum	1000.00	x	x

R.Palanikumar
Dy. Manager-Civil,BHEL-EDN

9	Filling available excavated earth in trenches, plinth side of foundations etc. in layers not exceeding 20cm in depth consolidating each deposited layer by ramming and watering lead upto 2km or within plant premisses which one is higher and lift upto 1.5m	Cum	59651.00	x	x
10	Disposal of excavated earth by Mechanical Transport including loading ,unloading and stacking earth more than 2 km complete all as per direction of Engineer-in -charge (outside the plant premises at the location shown by GPCL)	Cum	6357.00	x	x
11	Disposal of excavated rock by Mechanical Transport including loading ,unloading and stacking earth more than 2 km (outside the plant premises at the location shown by GPCL) complete all as per direction of Engineer-in -charge	Cum	1000.00	x	x
12	Finishing pile cap with water proofing cement paint of required shade :New work (Two or more coats applied @ 3.84 kg/10 sqm).	sqm	9687.00	x	x
13	Demolishing cement concrete manually/ by mechanical means including disposal of material within 2km/away from plant premises lead as per direction of Engineer - in- charge. Nominal concrete 1:3:6 or richer mix (i/c equivalent design mix)	Cum	100.00	x	x
14	Demolishing brick work /rrm manually/ by mechanical means including stacking of serviceable material and disposal of unserviceable material within 2km/away from plant premises lead as per direction of Engineer-in-charge.	Cum	500.00	x	x
15	Demolishing R.C.C. work manually/ by mechanical means including stacking of steel bars and disposal of unserviceable material within 2km/away from plant premises lead as per direction of Engineer - in- charge.	Cum	100.00	x	x
16	Extra for cutting reinforcement bars manually/ by mechanical means in R.C.C. or R.B. work (Payment shall be made on the cross sectional area of R.C.C. or R.B. work) as per direction of Engineer -in -charge.	Sqm	100.00	x	x
17	Vertical load testing(initial) of piles in accordance with IS 2911(part-4) including installation of loading platform and preparation of pile head or construction of test cap and dismantling of test cap after test etc. complete as per specification and upto 50 tonne capacity pile. all complete as per the direction of engineer in charge	Nos	10.00	x	x
18	Pull out load testing (initial) of piles in accordance with IS 2911(part-4) including installation of loading platform and preparation of pile head or construction of test cap and dismantling of test cap after test etc. complete as per specification and upto 50 tonne capacity pile. all complete as per the direction of engineer in charge	Nos	10.00	x	x
19	Lateral load testing(initial) of single pile in accordance with IS:2911 (Part-4) for determining safe allowable lateral load on pile upto 50 tonne capacity as per direction of engineer in charge	Nos	3.00	x	x
20	Vertical load testing of piles in accordance with IS 2911(part-4) including installation of loading platform and preparation of pile head or construction of test cap and dismantling of test cap after test etc.Routine test (test load 1.5 times the safe capacity) complete as per the direction of engineer in charge	Nos	825.00	x	x
21	Uplift testing of piles in accordance with IS 2911(part-4) including installation of loading platform and preparation of pile head or construction of test cap and dismantling of test cap after test etc. Routine test (test load 1.5 times the safe capacity) complete as per the direction of engineer in charge	Nos	825.00	x	x
22	Lateral load testing of single pile in accordance with IS:2911 (Part-4) for determining safe allowable lateral load on pile.Routine test (as per design load) complete as per the direction of engineer in charge	Nos	825.00	x	x
A	**Total Value of work Excluding GST**				x

CONTRACTOR SHOULD QUOTE PERCENTAGE (%) ABOVE/BELOW (+/-) (OR) AT PAR TO TOTAL

AMOUNT (A) X X X X X X X X X X X

`

***** QUOTED PERCENTAGE (%) IS APPLICABLE ON ALL THE RATES OF ITEMS UNIFORMLY.**

R.Palanikumar
Dy. Manager-Civil,BHEL-EDN

TECHNICAL SPECIFICATIONS

Module Mounting Structure piling works, erection of structures along with land levelling works: BHEL shall issue the relevant drawings during execution of works**.**

QUALITY ASSURANCE AND INSPECTION FOR CIVIL WORKS

1. INTRODUCTION

This part of the specification covers the sampling, testing and quality assurance requirement (including construction tolerances and acceptance criteria) for all civil and structural works covered in this specification. Wherever IS code or standards have been referred they shall be the latest revisions. The rate for respective items of work or price shall include the cost for all works, activities, equipment, instrument, personnel, material etc. whatsoever associated to comply with sampling, testing and quality assurance requirement including construction tolerances and acceptance criteria and as specified in subsequent clauses of this part of the technical specifications.

The QA and QC activities in all respects as specified in the technical specifications/ drawings / data sheets /quality plans / contract documents shall be carried out at no extra cost to the owner. The contractor shall prepare detailed construction and erection methodology scheme which shall be compatible to the requirements of the desired progress of work execution, quality measures, prior approvals if any and the same shall be got approved by the Engineer. If required, work methodology may be revised/reviewed at every stage of execution of work at site, to suit the site conditions by the contractor at no extra cost to the owner.

2. QA AND QC MANPOWER

The contractor shall nominate one overall QA coordinator for the contract detailing the name, designation, contact details and address at the time of post bid discussions. All correspondence related to Quality Assurance shall be addressed by the contractors QA coordinator to BHEL. BHEL shall address all correspondence related to Quality issues to the contractors QA coordinator. The Contractors QA coordinator shall be responsible for co-ordination of Quality activities between various divisions of the contractor and their sub-vendors on one hand & with GIPCL on the other hand.

The contractor shall appoint a dedicated, experienced and competent QA&QC in charge at site, preferably directly reporting to the Project Manager, supported as necessary by experienced personnel, to ensure the effective implementation of the approved QAP. The contractor shall finalize and submit a deployment schedule of QA&QC personnel along with their details to BHEL for approval acceptance and further shall ensure their availability well before the start of the concern activity.

3. LABORATORY AND FIELD TESTING

The field laboratory for QA and QC activities shall be constructed and set-up by the contractor in line with the approved FQP as per the site requirement or contractor has to arrange all the tests in NABL accredited laboratory. The Laboratory building shall be constructed and installed with the adequate facilities to meet the requirement of envisaged test setup. Temperature and humidity controls shall be available wherever necessary during testing of samples. The quality plan shall

R.Palanikumar,
Dy. Manager-Civil,BHEL-EDN

CONTACTOR (SIGN & SEAL)

identify the testing equipment's/instrument, which the contractor shall deploy and equip the field quality laboratory for meeting the field quality plan requirements.

The contractor shall furnish a comprehensive list of testing equipment's / instrument required to meet the planned/scheduled tests for the execution of works for BHEL acceptance/ approval. The contractor shall mobilize the requisite laboratory equipment and QA&QC manpower at least 15days prior to the planned test activity as per the schedule of tests. All equipment's and instruments in the field shall be calibrated before the commencement of tests and then at regular intervals, as per the manufacturer's recommendation and as directed by the BHEL. The calibration certificates shall specify the fitness of the equipment's and instruments within the limit of tolerance for use. Contractor shall arrange for calibration of equipment's and instruments by an NABL / NPL accredited agency and the calibration report shall be submitted to BHEL.

The tests which cannot be carried out in the field laboratory shall be done at a laboratory of repute. This includes selected IITs, NCB, CSMRS, reputed government / autonomous laboratories / organizations, NITs and other reputed testing laboratories. The test samples for such test shall be jointly selected and sealed by the engineer and thereafter these shall be sent to the concerned Laboratory through the covering letter signed by BHEL engineer. The test report along with the recommendations shall be obtained from the laboratories without delay and submitted to GIPCL.
Based on the schedule of work agreed with the engineer-in-charge and the approved FQP, the contractor shall prepare a schedule of tests and submit them to the engineer-in-charge and organize to carry out the tests as scheduled /agreed.

4. FIELD QUALITY PLAN
The work at site shall be approved as per the approved FQP

5. GENERAL QA REQUIREMENTS
The contractor shall ensure that the works, BOIs and services under the scope of contract whether manufactured or performed within contractor's works or at his sub-contractor's premises or at the GIPCL's site or at any other place of work are in accordance with the GIPCL/BHEL technical specification, applicable standards /codes, approved drawings / data sheets / quality plans and BOQ. All the works, BOIs and services shall be carried out as per the best prevalent engineering Practices and to the directions of the Engineer.

1. The laboratory equipment's required to be mobilised as per site requirement. If any, required for successful completion of work shall be provided /arranged by the contractor.

R.Palanikumar,
Dy. Manager-Civil,BHEL-EDN

CONTACTOR (SIGN & SEAL)

PROTECTION OF WORK

The Contractor shall have total responsibility for protecting his works till it is finally taken over by the Employer. No claim will be entertained by the Employer or the representative of the Employer for any damage or loss to the Contractor's works and the Contractor shall be responsible for complete restoration of the damaged works to original conditions to comply with the specification and drawings. Should any such damage to the Contractor's Works occur because of other party not being under his supervision or control, the Contractor shall make his claim directly with the party Concerned.

If disagreement or conflict or dispute develops between the Contractor and the other party or parties concerned regarding the responsibility for damage to the Contractor's Works the same shall be rectified. The Contractor shall not cause any delay in the repair of such damaged Works because of any delay in the resolution of such disputes. The Contractor shall proceed to repair the Work immediately and no cause thereof will be assigned
Pending resolution of such disputes.

EMPLOYMENT OF LABOUR

In addition to all local laws and regulations pertaining to the employment of labour to be complied with by the Contractor pursuant to GCC, the Contractor will be expected to employ on the work only his regular skilled employees with experience of the particular work. No female labour shall be employed after darkness. No person below the age of eighteen years shall be employed. All travelling expenses including provisions of all necessary transport to and from Site, lodging allowances and other payments to the Contractor's employees shall be the sole responsibility of the Contractor. The hours of work on the Site shall be decided by the Employer and the Contractor shall adhere to it. Working hours will normally be eight (8) hours per day - Monday through Saturday. Contractor's employees shall wear identification badges while on work at Site.

In case the Employer becomes liable to pay any wages or dues to the labour or any Government agency under any of the provisions of the Minimum Wages Act, Workmen Compensation Act, Contact Labour Regulation Abolition Act or any other law due to act of omission of the Contractor, the Employer may make such payments and shall recover the same from the Contractors Bills.
Electricity and water shall be the responsibility of the contractor.

FACILITIES TO BE PROVIDED BY THE CONTRACTOR

Contractor's site office Establishment

The Contractor shall establish a site office at the site and keep posted unauthorized representative for the purpose of the contract, pursuant to GCC.

Tools, tackles and scaffoldings

The Contractor shall provide all the construction equipment's, tools, tackles and scaffoldings required for pre-assembly, installation, testing, commissioning and conducting Guarantee tests of the equipment's covered under the Contract. He shall submit a list of all such materials to the Employer before the commencement of pre-assembly at Site. These tools and tackles shall not be removed from the Site without the written permission of the Employer. The Contractor shall

R.Palanikumar,
Dy. Manager-Civil,BHEL-EDN

CONTACTOR (SIGN & SEAL)

arrange Dozer, Hydra, Cranes, Trailer, etc. for the purpose of fabrication, erection and commissioning.

Testing Equipment and Facilities:
The contractor shall provide the necessary testing, equipment and facilities.

Site laboratory for civil works:
Contractor shall provide and maintain a site laboratory for the testing of construction material under the direction and general supervision of employer.

First-aid
The Contractor shall provide necessary first-aid facilities for all his employees, representatives and workmen working at the Site. Enough number of Contractor's personnel shall be trained in administering first-aid. The Employer will provide the Contractor, in case of any emergency, the services of an ambulance for transportation to the nearest hospital.

Cleanliness
a) The Contractor shall be responsible for keeping the entire area allotted to him clean and free from rubbish, debris etc. during the period of Contract. The Contractor shall employ enough number of special personnel to thoroughly clean his work-area at least once in a day. All such rubbish and scrap material shall be stacked or disposed in a place to be identified by the Employer. Materials and stores shall be so arranged to permit easy cleaning of the area. In areas where equipment might drip oil and cause damage to the floor surface, a suitable protective cover of a flame resistant, oil proof sheet shall be provided to protect the floor from such damage.

b) Similarly the labour colony, the offices and the residential areas of the Contractor's employees and workmen shall be kept clean and neat to the entire satisfaction of the Employer. Proper sanitary arrangements shall be provided by the Contractor, in the work-areas, office and residential areas of the Contractor.

LINES AND GRADES
All the Works shall be performed to the lines, grades and elevations indicated on the drawings. The Contractor shall be responsible to locate and layout the Works. Basic horizontal and vertical control points will be established and marked by the Employer at Site at suitable points. These points shall be used as datum for the works under the Contract. The Contractor shall inform the Employer well in advance of the times and places at which he wishes to do work in the area allotted to him so that suitable datum points may be established and checked by the Employer to enable the Contractor to proceed with his works. Any work done without being properly located may be removed and/or dismantled by the Employer at Contractor's expense.

FIRE PROTECTION
Required Fire Protection Measures are described under Clause titled

"**WORK &SAFETY REGULATIONS"** of this Sub-section.

R.Palanikumar,
Dy. Manager-Civil,BHEL-EDN

CONTACTOR (SIGN & SEAL)

SECURITY

The Contractor shall have total responsibility for all equipment and materials in his custody stores, loose, semi-assembled and/or erected by him at Site. The Contractor shall make suitable security arrangements including employment of security personnel to ensure the protection of all materials, equipment and works from theft, fire, pilferage and any other damages and loss. All materials of the Contractor shall enter and leave the Employer Site only with the written permission of the Employer in the prescribed manner.

CONTRACTOR'S AREA LIMITS

The Employer will mark-out the boundary limits of access roads, parking spaces, storage and construction areas for the Contractor and the Contractor shall not trespass the areas not so marked out for him. The Contractor shall be responsible to ensure that none of his personnel move out of the areas marked out for his operations. In case of such a need for the Contactor's personnel to work out of the areas marked out for him the same shall be done only with the written permission of the Employer.

CONTRACTOR'S CO-OPERATION WITH THE EMPLOYER

In case where the performance of the erection work by the Contractor affects the operation of the system facilities of the Employer, such erection work of the Contractor shall be scheduled to be performed only in the manner stipulated by the Employer and the same shall be acceptable at all times to the Contractor. The Employer may impose such restrictions on the facilities provided to the Contractor such as electricity, etc. as he may think fit in the interest of the Employer and the Contractor shall strictly adhere to such restrictions and co-operate with the Employer.

It will be the responsibility of the Contractor to provide all necessary temporary instrumentation and other measuring devices required during start-up and operation of the equipment systems which are erected by him. The Contractor shall also be responsible for flushing and initial filling of all the oil and lubricants required for the equipment furnished and installed by him, so as to make such equipment ready for operation. The Contractor shall be responsible for supplying such flushing oil and other lubricants unless otherwise specified elsewhere in documents and specifications

MATERIALS HANDLING AND STORAGE

All the equipment's furnished under the Contract and arriving at Site shall be promptly received, unloaded and transported and stored in the storage spaces by the Contractor .Contractor shall be responsible for examining all the shipment and notify the Employer immediately of any damage, shortage, discrepancy etc. for the purpose of Employer's information only. The Contractor shall submit to the Employer every week a report detailing all the receipts during the week.

However, the Contractor shall be solely responsible for any shortages or damage in transit, handling and /or in storage and erection of the equipment at Site. Any demurrage, wharf age and other such charges claimed by the transporters, railways etc. shall be to the account of the Contractor. The Contractor shall maintain an accurate and exhaustive record detailing out the list of all equipment received by him for the purpose of erection and keep such record open for the inspection of the Employer. All equipment shall be handled very carefully to prevent any damage or loss. No bare

R.Palanikumar,
Dy. Manager-Civil,BHEL-EDN

CONTACTOR (SIGN & SEAL)

wire ropes, slings, etc. shall be used for unloading and/or handling of the equipment without the specific written permission of the Employer. The equipment stored shall be properly protected to prevent damage either to the equipment or to the floor where they are stored. The equipment from the store shall be moved to the actual location at the appropriate time so as to avoid damage of such equipment at Site.

The actual location at the appropriate time so as to avoid damage of such equipment at Site. The Contractor shall ensure that all the packing materials and protection devices used for the various equipment's during transit and storage are removed before the equipment are installed. The consumables and other supplies likely to deteriorate due to storage must be thoroughly protected and stored in a suitable manner to prevent damage or deterioration in quality by storage. All the materials stored in the open or dusty location must be covered with suitable Weather proof and flameproof covering material wherever applicable.

If the materials belonging to the Contractor are stored in areas other than those earmarked for him, the Employer will have the right to get it moved to the place earmarked for the Contractor at the Contractor's cost. The Contractor shall be responsible for making suitable indoor storage facilities to store all equipment which require indoor storage. Normally, all the electrical equipment's such as motors, control gear, generators, exciters and consumables like electrodes, lubricants etc. shall be stored in the closed storage space. The Employer, in addition, may direct the Contractor to move certain other materials, which in his opinion will require indoor storage, to indoor storage areas which the Contractor shall strictly comply with.

CONSTRUCTION MANAGEMENT

The field activities of the Contractors working at Site, will be coordinated by the Employer and the Employer decision shall be final in resolving any disputes or conflicts between the Contractor and other Contractors and tradesmen of the Employer regarding scheduling and co- ordination of work. Such decision by the Employer shall not be a cause for extra compensation or extension of time for the Contractor.

The Employer shall hold weekly meetings of all the Contractors working at Site, at time and place to be designated by the Employer. The Contractor shall attend such meetings and take notes of discussions during the meeting and the decisions of the Employer and shall strictly adhere to those decisions in performing his Works. In addition to the above weekly meeting, the Employer may call for other meeting either with individual Contractors or with selected number of Contractors and in such a case the Contractor if called, will also attend such meetings. Time is the essence of the Contract and the Contractor shall be responsible for performance of his works in accordance with the specified construction schedule.

If at any time, the Contractor is falling behind the schedule, he shall take necessary action to make good for such delays by increasing his work force or by working overtime or otherwise accelerate the progress of the work to comply with the schedule and shall communicate such actions in writing to the Employer, satisfying that his action will compensate for the delay. The Contractor shall not be allowed any extra compensation for such action. The Employer shall however not be responsible for provision of additional labour

R.Palanikumar,
Dy. Manager-Civil,BHEL-EDN

CONTACTOR (SIGN & SEAL)

and or materials or supply or any other services to the Contractor except for theca-ordination work between various Contractors as set out earlier.

FIELD OFFICE RECORDS

The Contractor shall maintain at his Site Office up-to- date copies of all drawings, specifications and other Contract Documents and any other supplementary data complete with all the latest revisions thereto. The Contractor shall also maintain in addition the continuous record of all changes to the above Contract Documents, drawings, specifications, supplementary data, etc. effected at the field and on completion of his total assignment under the Contract shall incorporate all such changes on the drawings and other Engineering data to indicate as installed conditions of the equipment furnished and erected under the Contract. Such drawings and Engineering data shall be submitted to the Employer in required number of copies.

CONTRACTOR'S MATERIALS BROUGHT ON TO SITE

The Contractor shall bring to Site all equipment, components, parts, materials, including construction equipment, tools and tackles for the purpose of the Works under intimation to the Employer. All such goods shall, from the time of their being brought vest in the Employer, but may be used for the purpose of the Works only and shall not on any account be removed or taken away by the Contractor without the written permission of the Employer. The Contractor shall nevertheless be solely liable and responsible for any loss or destruction thereof and damage thereto.

The Employer shall have a lien on such goods for any sum or sums which may at any time be due or owing to him by the Contractor, under, in respect of or by reasons of the Contract. After giving a fifteen (15) days' notice in writing of his intention to do so, the Employer shall be at liberty to sell and dispose off any such goods, in such manner as he shall think fit including public auction or private treaty and to apply the proceeds in or towards the satisfaction of such sum or sums due as aforesaid. After the completion of the Works, the Contractor shall remove from the Site under the direction of the Employer the materials such as construction equipment, erection tools and tackles, scaffolding etc. with the written permission of the Employer. If the Contractor fails to remove such materials, within fifteen (15) days of issue of a notice by the Employer to do so then the Employer shall have the liberty to dispose of such materials.

PROTECTION OF PROPERTY AND CONTRACTOR'S LIABILITY

The Contractor shall be responsible for any damage resulting from his operations. He shall also be responsible for protection of all persons including members of public and employees of the Employer and the employees of other Contractors and Sub- Contractors and all public and private property including structures, building, other plants and equipment's and utilities either above or below the ground.

The Contractor will ensure provision of necessary safety equipment such as barriers, sign - boards, warning lights and alarms, etc. to provide adequate protection to persons and property. The Contractor shall be responsible to give reasonable notice to the Employer and the Employers of

R.Palanikumar,
Dy. Manager-Civil,BHEL-EDN

CONTACTOR (SIGN & SEAL)

public or private property and utilities when such property and utilities are likely to get damaged or injured during the performance of his Works and shall make all necessary arrangements
with such Employers, related to removal and/or replacement or protection of such property and utilities.

PAINTING

Unless otherwise mentioned in other sub-sections. all exposed metal parts of the equipment including piping, structure railings, etc. wherever applicable, after installation unless otherwise surface protected, shall be first painted with at least two coats of suitable primer which matches the shop primer paint used, after thoroughly cleaning all such parts of all dirt, rust, scales, greases, oils and other foreign materials by wire brushing, scraping or sand blasting and the same being inspected and approved by the Employer for painting. Afterwards, the above parts shall be finished painted with three coats of allowed resin machinery enamel paints. The minimum thickness of paint film shall not be less than 100 microns. The quality of the finish paint shall be as per the standards of Bureau of Indian Standards (BIS) or equivalent and to be of the colour as approved by the Employer.

INSURANCE

In addition to the conditions covered under the Clause entitled “Insurance” in Section General Conditions of Contract (GCC), the following provisions will also apply to the portion of works to be done beyond the Contractor’s own or his Sub-Contractor’s manufacturing Works.

Workmen’s Compensation Insurance

This insurance shall protect the Contractor against all claims applicable under the Workmen’s Compensation Act, 1948 (Government of India). This policy shall also cover the Contractor against claims for injury, disability disease or death of his or his Sub-Contractor’s employees, which for any reason are not covered under the Workmen’s Compensation Act, 1948.The liabilities shall not be less than the following: Workmen’s Compensation - As per Statutory Provisions Employee’s Liability - As per Statutory Provisions

UNFAVOURABLE WORKING CONDITIONS

The Contractor shall confine all his field operations to those works which can be performed without subjecting the equipment and materials to adverse effects during inclement weather conditions, like monsoon, storms, etc. and during other unfavourable construction conditions. No field activities shall be performed by the Contractor under conditions which might adversely affect the quality and efficiency thereof, unless special precautions or measures are taken by the Contractor in a proper and satisfactory manner in the performance of such Works and with the
Concurrence of the Employer. Such unfavourable construction conditions will in no way relieve the Contractor of his responsibility to perform the Works as per the schedule.

PROTECTION OF MONUMENTS AND REFERENCE POINTS

The Contractor shall ensure that any finds such as relic, antiquity, coins, fossils, etc. which he may come across during the course of performance of his Works either during excavation or elsewhere, are properly protected and handed over to the Employer. Similarly the Contractor shall ensure that

the bench marks, reference points, etc., which are marked either with the help of Employer or by the Employer shall not be disturbed in any way during the performance of his Works. If, any work is to be performed which disturb such reference, the same shall be done only after these are transferred to other suitable locations under the direction of the Employer. The Contractor shall provide all necessary materials and assistance for such relocation of reference points etc.

Emergency Action Plan.

The contractor shall prepare an emergency action plan approved by his competent authority to handle any emergency occurred during construction work. Regular mock drills shall be organized to practice this emergency plan. The Emergency Action Plan should be widely circulated to all the employees and suitable infrastructure shall be provided to handle the emergencies.

Scaffolding.

The contractor shall take all precautions to prevent any accidental collapse of scaffolding or fall of persons from scaffolding. The contractor should ensure that scaffolding are designed by a competent person and it erection and repairs should be done under the expert supervision- The scaffolding shall meet the required strength and other requirements for the purpose for which the scaffold is erected. The material used for scaffold should conform to the BIS / International standards.

Opening.

The contractor shall ensure that there is no opening in any working platform/any floor of the building, which may cause fall of workers or material. Whenever an opening on a platform/any floor of the building is unavoidable, the opening should be suitably fenced and necessary measures for protection against falling objects or building workers from such platform are taken by providing suitable safety nets, safety belts or other similar means.

Explosives.

The contractor shall take all precautions while handling, using, storing or transporting of all explosives. Before usage of any explosive necessary warning /danger signals be erected at conspicuous places to warn the workers and general public. The contractor should strictly ensure that all measures and precautions required to be complied for use, handling, storing or transportation of explosives under the rules framed under the Explosives Act, 1884.

Coffer Dam and Caissons (if required)

The Contractor shall ensure that the cofferdam and caissons are of good construction and adequate strength. The cofferdam and caissons should be provided with adequate means for workers to reach safely at the top of such dams in the event of an in-rush of water. The workers should be allowed to work in a cofferdam or caisson only after inspection and found safe by Engineer-in –charge. Such inspection is to be maintained in a Register. Where the workers are
employed to work in a compressed air environment at the work site of coffer dam or caissons a Construction Medical Officer assisted by a Nurse or trained first aid attendant should be available at all the times during such work.

Fencing of Machinery.

R.Palanikumar,
Dy. Manager-Civil,BHEL-EDN

CONTACTOR (SIGN & SEAL)

The contractor shall provide suitable fencing or guard to all dangerous and moving parts of machinery. The contractor shall not allow any of the employees to clean, lubricate, repair, adjust or examine during machinery in motion, which may cause injury to the person. Working Platforms should be fenced and shall have means of access

Carrying of Excessive Weight by a Worker.
The worker shall not be allowed to lift by hand or carry over his head, back or shoulder more than the maximum limit set by the prescribed rules for the construction Workers.

Dangerous and Harmful Gases/Equipment.
The contractor shall ensure that the workers are not exposed to any harmful gases during any construction activity including excavation, tunnelling, confined spaces etc. The contractor should not allow any worker to go into the confined space unless it is certified by Engineer in-charge to be safe and fit for the entry to such work place. Proper record and work permits should be followed to carry out such works.

Overhead Protection.
The contractor shall ensure that any area exposed to risk of falling materials, articles or objects is roped off or cordoned off or otherwise suitably guarded from inadvertent entry of any person. Wherever there is a possibility of falling of any material, equipment or construction workers while working at heights, a suitable and adequate safety net should be provided. The safety net should be in accordance with BIS Standards.

Working at Heights.
a) All working platforms, ways and other places of construction work shall be free from accumulations of debris or any other material causing obstructions and tripping.

b) Wherever workers are exposed to the hazard of falling into water, the contractor shall provide adequate equipment for saving the employees from drowning and rescuing from such hazards. The contractor shall provide boat or launch equipped with sufficient number of life buoys, life jackets etc. manned with trained personnel at the site of such work.

c) Every opening at elevation from ground level through which a building worker, vehicle, material equipment etc. may fall at a construction work shall be covered and/or guarded suitably by the contractor to prevent such falls.

d) Wherever the workers are exposed to the hazards of falling from height, the contractor shall provide full harness safety belts fitted with fall arresting systems to all the employees working at higher elevations and life line of 8mm diameter wire rope with turn buckles for anchoring the safety belts while working or moving at higher elevations. Safety nets shall also be provided for saving them from fall from heights and such equipment should be in accordance with BIS standards.

R.Palanikumar,
Dy. Manager-Civil,BHEL-EDN

CONTACTOR (SIGN & SEAL)

e) Wherever there is a possibility of falling of any material, equipment or construction workers while working at heights, a suitable and adequate safety net should be provided. The safety net should be in accordance with BIS Standards.

f) The contractor shall provide standard prefabricated ladders on the columns where the workers are required to use them as an access for higher elevations till permanent staircase is provided. The workers shall be provided with safety belts fitted with suitable fall arresting system (fall arresters) for climbing/getting down through ladders to prevent fail from height.

g) Rungs shall not be welded on columns. All the Stairs shall be provided with handrails immediately after its erection.

Handling of Hazardous Chemicals.

a) The Contractor will notify well in advance to the Engineer-in-charge of his intention to bring to the Site any container filled with liquid or gaseous fuel or explosive or petroleum substance or such chemicals which may involve hazards. GIPCL /BHEL shall have the right to prescribe the conditions, under which such container is to be stored, handled and used during the performance of the works and the Contract shall strictly adhere to and comply with such instructions. The Engineer-in-charge shall have the right at his sole discretion to inspect any such container or such construction plant / equipment for which material in the container is required to be used

And if in his opinion, its use is not safe; he may forbid its use. No claim due to such prohibition shall be entertained by GIPCL and GIPCL shall not entertain any claim of the Contractor towards additional safety provisions /conditions to be provided for / constructed.

b) Further, any such decision of the Engineer-in-charge shall not, in any way, absolve the Contractor of his responsibilities and in case, use of such a container or entry thereof into the Site area is forbidden by GIPCL L/BHEL, the Contractor shall use alternative methods with the approval of the GIPCL /BHEL without any cost implication to the GIPCL /BHEL or extension of work schedule.

c) Where it is necessary to provide and / or store petroleum products or petroleum mixtures and explosives, the Contractor shall be responsible for carrying-out such provision and / or storage in accordance with the rules and regulations laid down in Petroleum Act 1934, Explosives Act 1948, and Petroleum and Carbide of Calcium Manual published by the Chief Inspector of Explosives of India. All such storage shall have prior approval of the Engineer In-charge In case any approvals are necessary from the Chief Inspector (Explosives) or any statutory authorities; the Contractor shall be responsible for obtaining the same.

d) The Contractor shall be fully responsible for the safe storage of his and his Sub-contractor's radio-active sources in accordance with BARC/DAE (Bhabha Atomic Research Centre/ Department of Atomic Energy, Govt. of India) Rules and other applicable provisions- AU precautionary measures stipulated by BARC/DAE in connection with use, the contractor would take
Storage and handling of such material.

R.Palanikumar,
Dy. Manager-Civil,BHEL-EDN

CONTACTOR (SIGN & SEAL)

e) The contractor shall provide suitable personal protective equipment's to the workers who are handling the hazardous and corrosive substances including alkalis and acids.

f) As a precautionary measure the contractor should keep the bottles filled with distilled water in cupboard / Boxes near work place for emergency eyewash by worker exposed to such hazardous chemicals.

Eye Protection.

The contractor shall provide suitable personal protective equipment to his workmen depending upon the nature of hazards and ensure their usage by the workers engaged in operations like welding, cutting, chipping, grinding or similar operations which may cause injuries to his eyes.

Excavation.

The contractor shall take all necessary measures during excavation to prevent the hazards of falling or sliding material or article from any bank or side of such excavation which is more than one and a half meter above his footing by providing adequate piling, shoring, bracing etc. against such bank or sides. Adequate and suitable warning signs shall be put up at conspicuous places at the excavation work to prevent any persons or vehicles falling into the excavation trench. No worker should be allowed to work where he may be stuck or endangered by excavation machinery or collapse of excavations or trenches.

Electrical Hazards.

a) The contractor should ensure that all electrical installations at the construction work comply with the requirements of latest electricity acts /rules.

b) The contractor shall take all adequate measures to prevent any worker from coming into physical contact with any electrical equipment or apparatus, machines or live electrical circuits which may cause electrical hazards during the construction work. The contractor shall provide the sufficient ELCBs / RCCBs for all the portable equipment's, electrical switchboards, distribution panels etc. to prevent electrical shocks.

c) The contractor should ensure use of single / double insulated hand tools or low voltage i.e., 110 volts hand tools.

d) The contractor should also ensure that all temporary electrical installations at the construction works are provided with earth leakage circuit breakers.

e) No electric cable in use by the Contractor /Employer will be disturbed without prior permission. No weight of any description will be imposed on any cable and no ladder or similar equipment will rest against or attached to it.

f) The Contractor shall employ necessary number of qualified, full time Electricians/electrical supervisors to maintain his temporary electrical installations.

Vehicular Traffic.

R.Palanikumar,
Dy. Manager-Civil,BHEL-EDN

CONTACTOR (SIGN & SEAL)

The contractor should employ vehicle drivers who hold a valid driving license under the Motor Vehicles Act, 1988.

Lifting Appliances, Tools & Tackles. Lifting Gear and Pressure Plant & Equipment etc.
The contractor shall ensure alt the lifting appliances, tools & tackles including cranes etc., lifting gear including fixed or movable and any plant or gear, hoists, Pressure Plant and equipment etc. are in good condition and shall be examined by competent person and only certified shall be used at sites. Periodical Examination and the tests for all lifting / hoisting equipment & tackles shall be Carried out. A register of such examinations and tests shall be properly maintained by the Contractor and will be promptly produced as and when desired by the Engineer I/c or by the person authorized by him.

Excessive Noise, Vibration.
The contractor shall take adequate measures to protect the workers against the harmful effect of excessive noise or vibration. The noise should not exceed the limits prescribed under the concerned rules. Noise Pollution (Regulation and Control) Rules, 2000.

Electrical Installations.

a)The Contractor shall not interfere or disturb electric fuses, wiring and other electrical equipment ongoing to the Employer or other contractors under any circumstances, whatsoever, unless expressly permitted in writing by the Engineer I/c to handle such fuses, wiring or electrical equipment. Before the

b) Contractor connects any electrical appliances to any plug or socket GIPCL ongoing to the other contractor or the GIPCL /BHEL, he shall :-Satisfy the Engineer I/C that the appliance is in good working condition; Inform the Engineer I/C of the maximum current rating, voltage and phases of the appliances; Obtain permission of the Engineer-in-Charge detailing the sockets to which the appliances may be connected.

c) The Engineer in-charge will not grant permission to connect until he is satisfied that :-The appliance is in good condition and is fitted with suitable plug; having earth connection with the body. Wherever armoured / metallic sheathed multi core cable is used, the same armoured / sheathed should be connected to earth.

d) No repair work shall be carried out on any live equipment. The Engineer in-Charge must declare the equipment safe and a permit to work shall be issued by the GIPCL /BHEL / contractor as the case may be to carry out any repair/ maintenance work. While working on electric lines / equipment's whether live or dead, suitable type and sufficient quantity of tools will have to be provided by the contractor to electricians / workmen / Officers.

e) The contractor shall employ necessary number of qualified, full time Electricians / Electrical Supervisors to maintain his temporary electrical installation.

f) The installations are provided with suitable ELCBs and RCCBs wherever

R.Palanikumar,
Dy. Manager-Civil,BHEL-EDN

CONTACTOR (SIGN & SEAL)

required.

Safety Organisation.

a) The contractor employing more than 250 workmen whether temporary, casual, probationary, regular or permanent shall employ at least one fulltime safety officer exclusively to supervise safety aspects of the equipments and workmen, who will coordinate with the GIPCL /BHEL Safety Officer. Further requirement of safety officers, if any, shall be guided by Rule 209 of The Building and Other Construction Worker (Regulation of Employment and Conditions of Service) Central Rule 1998. In case the work is being carried out through subcontractor, the employees / workmen of the sub-contractor shall also be considered as the contractor's employees/workmen for the above purpose.

b) In case of contractor deploying less than 250 workmen he should designate one of his Engineer / supervisor or the contractor himself (if he is directly supervising the work) as safety officer in addition to his existing responsibilities. The Engineer./ supervisor should get at least 2 days safety training from any reputed organization or from GIPCL/BHEL before resuming the work. If already trained in past the declaration along with training. Certificate to be furnished to GIPCL safety officer.

c) The name and address of such Safety Officer of the Contractor will be promptly informed in writing to the EIC with a copy to the Project Safety Officer before he starts work or immediately after any change of the incumbent is made during currency of the Contract.

Reporting of Accident and Investigation.

In case any accident occurs during the construction / erection or other associated activities undertaken by the Contractor thereby causing any near miss, minor or major or fatal injury to his employees due to any reason, whatsoever, it shall be the responsibility of the Contractor to promptly inform the same to the Engineer in charge, GIPCL /BHEL Safety Officer with a copy to GIPCL /BHEL Head of Project in the prescribed form and also to all the authorities envisaged under the applicable laws.

Right to stop Work.

a) The Engineer I/C shall have the right at his sole discretion to stop the work, if in his opinion the work is being carried out in such a -way that it may cause accidents and endanger the safety of the persons and / or property, and / or equipment's. In such cases, the contractor shall be informed in Writing about the nature of hazards and possible injury / accident and he shall comply to remove shortcomings promptly. The Contractor after stopping the specific work can, if felt necessary appeal against the order of stoppage of work to the Project Manager within 3 days of such stoppage of work and decision of the Project Manager in this respect shall be conclusive and binding on the Contractor.

b) The Contractor shall not be entitled for any damages / compensation for stoppage of work due to safety reasons and the period of such stoppage of work shall not be taken as an extension of time for Completion of the Facilities and will not be the ground for waiver of levy of liquidated Damages.

Fire Protection.

R.Palanikumar,
Dy. Manager-Civil,BHEL-EDN

CONTACTOR (SIGN & SEAL)

a) The contractor shall provide sufficient fire extinguishers at place /s of work. The fire extinguishers shall be properly maintained as per relevant BIS Standards. The employees shall be trained to operate the fire extinguishers / equipment.

b) The Contractor shall provide enough fire protection equipment of the types and number for the warehouses, office, temporary structures, labour colony area etc. Access to such fire protection equipment, shall be easy and kept open at all time.

c) The work procedures that are to be used during the erection shall be those which minimise fire hazards to the extent practicable. Combustible materials, combustible waste and rubbish shall be collected and removed from the Site at least once each day. Fuels, oils and volatile or flammable Materials shall be stored away from the construction and equipment and materials storage areas in safe containers. Untreated canvas, paper, plastic or other flammable flexible materials shall not at all be used at Site for any other purpose unless otherwise specified. If any such materials are Received with the equipment at the Site, the same shall be removed and replaced with acceptable material before moving into the construction or storage area.

d) Similarly corrugated paper fabricated cartons etc. will not be permitted in the construction area either for storage or for handling of materials. All such materials used shall be of water proof and flame resistant type. All the other materials such as working drawings, plans etc. which are combustible but are essential for the works to be executed shall be protected against combustion resulting from welding sparks, cutting flames and other similar fire sources.
e) All the Contractor's supervisory personnel and sufficient number of workers shall be trained for fire-fighting and shall be assigned specific fire protection duties. Enough of such trained personnel must be available at the Site during the entire period of the Contract.
Penalties.
a) If the Contractor fails in providing safe working environment as per the Safety Rules of GIPCL /BHEL or continues the work even after being instructed to stop the work by the Engineer –in-Charge as provided above, the Contractor shall be penalized at the rate of Rs. 25,000/-- per day or part thereof till the instructions are complied with and so certified by the Engineer I/C- However, in case of accident, the provisions contained below shall also apply in addition to the penalties mentioned in this sub clause.

b) If the Contractor does not take all safety precautions and / or fails to comply with the Safety Rules as prescribed by the Employer or under the applicable law for the safety of the plant and equipment and for the safety of personnel and the contractor does not prevent hazardous conditions which cause injury to this own employees or employees of other contractors, or GIPCL 's employees or any other person who are at the Site or adjacent thereto, the Contractor shall be responsible for payment of penalty to GIPCL as per the following schedule; -

a) Fatal injury or accident causing death: Penalty @10% of contract value death or Rs. 5,00,000/- per person, whichever is less.

b) Major injuries or accident causing 25% or more permanent disablement to workmen or employees. Penalty @2.5 % of contract value or Rs.1,00,000/- per person, whichever is less.

R.Palanikumar,
Dy. Manager-Civil,BHEL-EDN

CONTACTOR (SIGN & SEAL)

Permanent disablement shall have the same meaning as indicated in The Workmen's Compensation Act' 1923. The penalty mentioned above shall be in addition to the compensation payable to the workmen / employees under the relevant provisions of the Workmen's Compensation Act' 1923and rules framed there under or any other applicable laws as applicable from time to time.

c) If any contractor worker found working without using the safety equipment like safety helmet, safety shoes, safety belts, etc. or without anchoring the safety belts while working at height the Engineer in-charge / Safety Officer of GIPCL shall have the right to penalize the contractor for Rs. 200/- per person per day and such worker shall be sent out of the workplace immediately and shall not be allowed to work on that day. Engineer in charge/ Safety Officer of GIPCL will also issue a notice in this regard to the contractor.

d) If two or more fatal accidents occur at same GIPCL site under the control of contractor during the period of contract and he has:-
(1) Not complied with keeping adequate PPEs in stock,
(2) Defaulted in providing PPR's to his workmen
(3) Not followed statutory requirements / GIPCL safety rules
(4) Been issued warning notice/s by GIPCL head of the project on non
Observance of safety norms
(5) Not provided safety training to all his workmen, the contractor can
Be debarred from getting tender documents in GIPCL for two years from the date of last accident.

e) The safety performance will also be one of the overriding criteria for evaluation of overall performance of the contractors by GIPCL. The contractor shall submit the accident data including fatal / non-fatal accidents for the last 3 years where he has undertaken the construction activities Projects-wise along with the tender documents. This will also be considered for evolution of tender documents. If the information given by the contractor found incorrect, his contract will be liable to be terminated.

Royalty certificates to be supplied by the contractor.

R.Palanikumar,
Dy. Manager-Civil,BHEL-EDN

CONTACTOR (SIGN & SEAL)

BHARAT HEAVY ELECTRICALS LIMITED

ELECTRONICS DIVISION

BANGALORE – 560026

GENERAL CONDITIONS OF CONTRACT

FOR

LUMP-SUM, ITEM-RATE AND PERCENTAGE

CONTRACT

R.Palanikumar,
Dy. Mgr-Civil,BHEL-EDN

CONTACTOR (SIGN & SEAL)

REVISED GENERAL CONDITIONS OF CONTRACT w.e. f. 1-4-1975

CONTENTS

Condition
Number Description

CHAPTER –I

1. Definitions

CHAPTER-II

2. Heading to the contractor
3. Contract documents
4. Works to be carried out
5. Provisional items
6. Deviations
7. Time
8. Stores &materials
9. Delay & Extension of time
10. Patent Rights
11. Octroi &other duties
12. Royalties
13. Plant & Equipment
14. Assignment or Transfer of contract
    a) Sub -contract
15. Compliance to Regulations and Bye –laws

CHAPTER –III

16. Security deposit
17. Orders under the contract
18. Admission to site
19. Contractor's Supervision
20. Labour
21. Water
22. Temporary Workshops, stores etc.,
23. Stores &materials-on-site etc
24. Tools & plant on site
25. Statement of Hire charges
26. Precautions against Risks
27. Notices & Fees
28. Setting out of the works and protecting & maintaining signal marks
29. Site drainage
30. Excavations, relies, etc.,
31. Foundations
32. Covering in work
33. Approval of works by stages
34. Execution of works
35. Day work
36. Inspection of the work

R.Palanikumar,
Dy. Mgr-Civil,BHEL-EDN

CONTACTOR (SIGN & SEAL)

37. Responsibility for building
38. Insurance of works against damage and loss, due to fire, tempest, floods etc.
39. Damage or loss to private property and injury to workman.
40. Completion
41. Compensation for delay.
42. Laws governing the content.
43. Cancellation of contract for corrupt act.
44. Cancellation of contract for insolvency, assignment or sub-letting of contract
45. Cancellation of contract for default.
46. Termination of contract for death.
47. Special powers or determination.
48. Fair wage.

CHAPTER-IV

49. Records and measurements.
50. Valuation of deviations.
51. Reimbursement / refund on variation in price.
52. Advances on account.
53. Final bill.
54. Payment of bills.
55. Recovery from contractor.
56. Post-technical audit of work and bills.
57. Refund of security deposit.

Annexure-'A'

BHEL contractor's Labour Regulation and BHEL safety code (See Condition 20)

R.Palanikumar,
Dy. Mgr-Civil,BHEL-EDN

CONTACTOR (SIGN & SEAL)

1. DEFINITIONS

In these general conditions of contract, the following terms shall have the meaning hereby assigned to them except where the context otherwise requires:

a) The "CONTRACT" means the documents forming the tender and acceptance thereof , together with all the document referred therein including general and Special Conditions of Contract, Schedules 'A', 'B', 'C', 'D', 'E' and/or General Summary attached to the form of tender, the Karnataka P.W.D. Schedule of Rates as amended up to 1979-80 the specifications and the Drawings. All these documents as applicable taken together shall be deemed to form one contract and shall be complementary to one another.

b) The ''TENDER DOCUMENTS'' means the form of tender, the applicable schedules 'A', 'B','C', 'D', 'E' and/or General and Special conditions of contract and the specifications and / or drawings as given to contractors on payment for the purpose of preparing their tenders

c) The 'WORK' means the work described in the tender documents, in individual work orders and/or accompanying drawings and specifications as may be issued from time to the Contractor by the Senior Engineer (Civil) deputy manager (projects) or the Engineer- in- charge within the powers conferred upon them, including all modified or additional works and obligations to be carried out either at the site or at any Factory workshop or other place as required for the performance of the contract.

d) The ''SITE'' means the land and /or other places on, in, into or through which the work is to be executed under the contract or any adjacent land , path or street which may be allotted to or used for the purpose of carrying out the contract.

e) The ''CONTRACTOR'' means the individual, firm or company, whether incorporated or not, undertaking the work and shall include the legal personal representatives of such individuals or the persons composing the firm or company, or the successors of the firm or Company and the permitted assigns of such individual or the firm or company.

f) The abbreviations DGM/P, Sr. M/P, S.E/C means Dy. General Manager /Projects, Senior Manager / Projects, and Senior Engineer / Civil respectively, who direct the contact and the letters E/C means Engineer / Civil in-charge of the particular work pertaining to the contract.

g) The "Engineer – in – charge" means the Engineer / Civil deputed by Senior / Civil to supervise the work, or part of the work.

h) "APPROVED" and "DIRECTED" means the approval or direction of the DGM/P. Sr. M/P, or S.E/C. or person deputed by them for the particular purpose.

i) "BHARAT HEAVY ELECTRICALS LIMITED" hereinafter referred to as BHEL SHALL mean the board of directors, Resident Director, General Manager/ Project Administrator or other Administrative Officers, of the said company including the project officer, Sr. Manager / Projects, or Senior Engineer / Civil, Engineer/ Civil authorized to invite tenders and enter into the contracts for works on behalf of "Bharat Heavy Electrical Limited", Unit: Electronics Division, Mysore Road, Bangalore – 26.

j) In the case of lump sum contracts, CONTRACTOR'S PERCENTAGE" means the percentage offered by the contractor as addition to or deduction from the cost of buildings, or other works listed in schedule, 'A' to provide a lump sum quotation for performance of the contract inclusive of all extra costs, profit, establishment charges, carriage, insurance etc., complete.

In the case of percentage rate contracts, "Contractor's percentage" shall, if the context so permits, mean the

R.Palanikumar,
Dy. Mgr-Civil,BHEL-EDN

CONTACTOR (SIGN & SEAL)

uniform percentage tendered by the contractor and accepted by the Accepting Officer, and the expression "CONTRACT RATE" shall likewise mean the rates in the K.P.W.D. schedule of rate as amended up to 1979 - 80 as adjusted by the said Contractor's percentage, if any.

k) The "CONTRACTOR SUM" means the sum accepted, or the sum calculated in accordance with the prices accepted in the tender and / or the contract rates as payable to the Contractor for the entire execution and full completion of the work.
l) The "FINAL SUM" means the actual amount payable under the contract by BHEL, to the Contractor for the entire execution and full completion of the work.
m) The "DATE OF COMPLETION" is the date or dates for completion of the whole or any part of the work as set out in or ascertained in accordance with the individual work orders or the tender documents, or any subsequent agreed amendment thereto.
n) A "WEEK" means seven days without regard to the number of hours worked or not worked in any day in that week.
o) A"DAY" means a day of 24 (Twenty four) hours irrespective of number of hours worked or not in that day A "WORKING DAY" means any day other than that prescribed by the Negotiable instruments ACT as being a holiday, consists of the number of hours of labour as commonly recognized by good employers in the trade in the District where the work is carried out or as laid down in the BHEL Regulation.
p) "DEVIATION ORDER" means any an order given by the Senior Engineer/Civil or Engineer-in-charge to effect an alteration, addition or deduction, which does not radically affect the scope of nature of the contract.
q) "EMERGNCY WORK" means any urgent measures which, in the opinion of the Engineer-in-charge, become necessary during the progress of the work to obviate any risk of accident or failure or which become necessary for security.
r) "PROVISIONAL SUM" or "PROVISIONAL LUMPSUM" means a lump-sum include by the BHEL in the tender documents and represent the estimated value of work for which details are not available at the time of inviting the tender.
s) "PROVISIONAL ITEMS" means items for which approximate quantities have been included in the tender documents.
t) "DAY WORK" means on item of work requiring the employment of labour with or without materials as the case may be, which, in the opinion of the Senior Engineer /Civil-in-charge, is not capable of being evaluated by the accepted methods of measurement or assessment and is paid for on the basis of the actual labour and materials utilised on the particular item of work referred to.

CHAPTER-II

R.Palanikumar,
Dy. Mgr-Civil,BHEL-EDN

CONTACTOR (SIGN & SEAL)

SCOPE OF CONTRACT

2. HEADING TO THE CONTRACT

The heading to these conditions shall not affect the interpretation thereof

3. CONTRACT DOCUMENTS:

The accepting officers shall furnish to the Contractor on demand "FREE OF COST" three copies of signed Drawing and one copy of the signed agreement comprising of preamble to Agreement, General and Special Specifications, Schedules 'A' 'B' 'C' 'D' and 'D' etc., (but excluding General Conditions of Contract and Drawing) and three copies of all further drawings issued during the progress of work.

However, for any additional copies of the agreement or drawings required by the Contractor, the same will be supplied on payment the Specified Cost.

The contractor shall keep one copy of all the drawings and of the specifications on the site and the Engineer-in-charge or his representative shall at all reasonable times have access to them.

4. WORK TO BE CAREED OUT :

The Contract shall, expect as provide under Schedules 'B' and 'C' include all labour , materials, tools, plant , equipment and transport which may be required in preparation for , and in the execution and full completion of the work. Schedule 'A' shall be deemed to have been prepared in accordance with good practice and recognized principles and unless otherwise stated , the descriptions given therein shall be held to include waste on materials, carriage and cartage, lead ,return of empties , hosting, setting, fitting in position and all other labour necessary in and for the entire execution and full completion aforesaid. Any error in description or quantity in Schedule 'A' or any omission there from shall not vitiate the Contract or release the Contractor from the execution of the whole or any part of the work comprised therein according to the drawings and specifications, or from any of his obligations under the contract. The insertion of the name of any firm of suppliers in the Tender Document is for the purpose of obtaining a particular class or quantity of materials or workmanship but the articles or materials specified may be obtained from any other firm subject to the prior written approval of the Senior Engineer / Civil / Engineer/Civil.

In the case of a discrepancy between Schedule 'A' the Specifications and/or the drawings, the accepting officer shall be the sole deciding authority as to which shall prevail and his decision shall be final and conclusive. If neither drawings nor specifications contain any mention of minor details of construction, which in the opinion of the Accepting Officer whose decision shall be final and conclusive, are responsible and obvious and fairly intended for the satisfactory completion of the work, such details shall be provide by the Contractor without any extra cost as if they were specially mentioned and shall be deemed to be included in the contract.

The Contractor will be deemed to have satisfied himself as to the nature of the site, local facilities of access and all matters affecting the execution and completion of the work. No extra charges consequent on any misunderstanding in this respect or otherwise will be allowed.

5. PROVISIONAL ITEMS:

The full amount of provisional lump-sum and the value annexed to each provisional item inserted in the Tender documents shall be deducted from the contract sum and the value of work ordered and executed there under shall be ascertained by measurement or valuation as for deviations.

No work under these items is to be begun without instructions in writing from the Engineer- in –charge.
The extend of quantities or items described as " provisional " shall not be held to guarantee or limit the amount and description of the work to be executed by the Contractor either respect of the item concerned or the work as a whole.
No addition or deduction shall be made by the Contractor to the amount of the provisional lump-sums as included in the tender documents.

R.Palanikumar,
Dy. Mgr-Civil,BHEL-EDN

CONTACTOR (SIGN & SEAL)

6. DEVIATIONS:

The contractor shall not make any alteration to or omission from the work as described in the tender documents except in pursuance of the written instruction of the Engineer –in charge. No such deviation from the work described in the tender documents shall be valid unless the same has been specifically confirmed and accepted by the Accepting Officer in writing and incorporated in the contract.

The accepting Officer may deviate, either by way of addition or deduction, from the work so described, provided that the contractor sum be not thereby varied on the whole by more than the percentage set out in the tender documents. The value of all additions and deductions will be added to, or deducted from the contract sum. Whenever the Accepting Officer intends to exercise such a right, his intention shall specify the deviation which are to be made, the lump-sum assessment or the proposed basis of payment, the extra time allowed, if, any and the date for completion of the entire contract.

Any objection by the Contractor to any matter concerning the order shall be notified by him in writing to the Senior Engineer (Civil) / Engineer-in-charge within SEVEN DAYS from the date of such order, but under no circumstances shall the work be stopped (unless so order by the Senior Engineer/Civil /E/C owing to differences or controversy that may arise from such an objection. In the absence of such a notification of objection, by the contractor, he will be deemed to have accepted the ordered and the conditions stated therein. In the event of the contractor, failing to agree with the Senior Engineer/ Civil /E/C regarding the terms of the proposed deviation, the objection shall e referred to the DGM/P/Sr.M/P, whose decision shall be final, conclusive and binding on the Contractor.

7. TIME:

Time is the essence of the contract and is specified in the tender document or in each individual work order.

As soon as possible after the contract is let or any substantial work order is placed and before work under it is begun, the Senior Engineer/Civil or Engineer-in-charge and the contractor shall (if so required by the Sr. E/C) agree to a time and Progress chart. The chart shall be prepared direct relation to the time stated in the tender documents or the Work Order for the completion of the individual items thereof, and/or the contract or Orders a whole. It shall indicate the forecast of the dates for the commencement and completion of the various trade processes or sequences of the work, and shall be amended as may be required by agreement between the Sr. E/C or Engineer-in-charge, and the contractor within the limitation of the time imposed in the tender documents or ORDER.

In the absence of any specific Time and Progress Chart to be agreed to between the Contractor and the Sr. E/C. or Engineer –in-charge, the contractor shall ensure and maintain uninterrupted progress of the work such that the entire work shall be completed within the time imposed in the tender document or order and that the proportion of work completed up to any time in relation to the entire work to be done under the Contract or Order shall not be less than the proportion that the time elapsed bears to total time of completion provided in the tender Document or Order.

The Contractor shall suspend the execution of the work, or any part or parts there of whenever called upon in writing by the Engineer –in –charge to be so, and shall not resume work there on unit so directed in writing by the Engineer –in –charge. The Contractor will be allowed an allowed an extension of time for completion not less than the period of suspension but no other claim in this respect for completion or otherwise how so ever will be admitted. This may also be extended to allow for alteration of work made by the deviation order.

8. STORES AND MATERIALS:

The contractor shall, at his own expense , supply all stores and materials required for the contract, other than those listed in Schedule 'B' which may be provided by Bharat Heavy Electricals Limited at the rates detailed therein subject to their availability at the place of issue indicated therein. All stores and materials to be supplied by the Contractor shall be of the best kind as described in the Specifications and the Contractor shall,

R.Palanikumar,
Dy. Mgr-Civil,BHEL-EDN

CONTACTOR (SIGN & SEAL)

if required by the Engineer –in- charge furnish him with proof to his satisfaction that the store and materials so comply with the specifications.

The contractor shall, at his own expanse and without delay, supply samples of stores and materials proposed to be used in the execution of the work for the approval of the Engineer-in charge, who may reject all stores and materials not corresponding either in quality or character to the approved samples.

In the case of stores provided under Schedule 'B' the Contractor shall bear the cost of loading, transporting to site, unloading, storing under cover as required, assembling & jointing the several parts together as necessary and incorporating & fixing these stores & materials in the work, including all preparatory work of whatever description that may be required, and closing, preparing, loading and returning empty cases or containers to the place of issue without any extra charges.

9. DELAY AND EXTENSION OF TIME:

If, in the opinion of senior Engineer/Civil/engineer/Civil the work is delayed:

i) by reason of abnormally bad weather, or

ii) by reason of serious loss or damage by fire, or

iii) by reason of civil commotion, local combination of workmen, strike or lockout, affecting any of the trades employed on the work, or

iv) by delay on the part of the agency or tradesman engaged by BHEL in executing work not forming part of this contract, or

v) by reason of any other cause which in the absolute discretion of the Sr. M/P. Sr. E/C. or E/C is (when he is the Accepting Officer of the Contract) beyond the contractors control, then in any such case, the Accepting Officer, on the recommendation of the Sr. E/C., E/C (or higher authority) may make fair and reasonable extension in the completion dates of the individual items of work or the contract as a whole. Such extension which will be communicated to the contractor by the Sr. E/C. /E/C. in writing shall be final and binding on the contractor. No other claim in this respect for compensation or otherwise howsoever is admissible. Upon the happening of any such event causing delay, the contractor shall immediately give notice thereof in writing to the Sr. E/C/E/C but shall do all that may reasonably be required to the satisfaction of the Sr. E/C/E/C to proceed with the work.

10. PATENT RIGHTS:

The contractor shall fully indemnify BHEL, or the agent, servant, or employee of BHEL, against any action, claim or proceeding relating to infringement or the use of any patent or design or any alleged patent or design rights, and shall pay any royalties which may be payable in respect of any article/ or part thereof included in the contract.

In the event of any claims being made or action brought against BHEL, or any agent, or servant or employee of BHEL., in respect of any of the matters aforesaid, the contractor shall not apply when such increment has taken place in complying with the specific directions issued by the BHEL but the contractor shall pay any royalties payable in respect of any such use.

11. OCTROI AND OTHER DUTIES:

All charges on account of Octroi, Terminal or Sales Tax and / or other duties on materials obtained for the work (excluding materials provided by BHEL, on payment) shall be borne by the contractor.

R.Palanikumar,
Dy. Mgr-Civil,BHEL-EDN

CONTACTOR (SIGN & SEAL)

12. ROYALTIES:

Royalties fixed from time to time as per prevalent local rules will be recovered for materials, which the contractor may be allowed to remove from quarries situated on land which is in charge of the BHEL, authorities.

13. PLANT AND EQUIPMENT:

The contractor, shall at his own expanses, supply all tools, plant and equipment (herein-after referred to as T & P) required for the execution of the contract, as specified in the tender documents.

14. ASSIGNMENT OR TRANSFER OF CONTRACT:

The contract shall not, without the prior written approval of the Accepting Officer, assign or transfer the contract or any part thereof, or any share, or interest therein to any other person. No sum of money which may become payable under the contract shall be payable to any person other than the contractor unless the prior written approval of the Accepting Officer to the assignment or transfer of such money is given.

a) SUB-CONTRACT:

The contractor shall not sub-let any portion of the contract without the prior written approval of the Accepting Officer

15. COMPLIANCE TO REGULATION AND BYE-LAWS :

The contractor shall conform to the provisions of any statute relating to the work and regulations and bye-law of any local authority and water and of any water and lighting Companies or Under takings with those systems the works is proposed to be connected. He shall before making any variation from the drawings or the specification that may be necessitated for such connection give the Senior Engineer /civil /E/C notice, specifying the variation proposed to be made and the reason therefore and shall not vary out any such variation until he has received instructions from the Senior Engineer/ Civil /E/C in respect thereof. The contractor shall be bound to give all notices required by statute regulations or bye-laws as aforesaid and to pay all fees and taxes payable to any authority in respect thereof.

CHAPTER-III

PERFORMANCE OF THE CONTRACT

16. SECURITY DEPOSIT

R.Palanikumar,
Dy. Mgr-Civil,BHEL-EDN

CONTACTOR (SIGN & SEAL)

Upon acceptance of the tender, the successful tenderer shall remit the security deposit with Bharat Heavy Electricals Ltd within the time as specified in the Letter of Intent.

The rate of Security Deposit will be as below:

Up to Rs.10 Lakhs	10%
Above Rs. 10 Lakhs up to Rs.50lakhs	Rs .1 Lakhs + 7.5% of the amount exceeding Rs. 10 Lakhs
Above Rs.50 Lakhs	Rs. 4 Lakhs + 5% of the amount exceeding Rs. 50 Lakhs

The contractor should submit the Security Deposit before the start of the work.

i) Cash (as permissible under the income Tax Act).

ii) Pay order, demand draft in favour of BHEL.

iii) Local cheques of scheduled banks, subject to realization.

iv) Securities available from Post Offices such as National Saving Certificates, Kisan Vikas Patras etc., (Certificate should be held in the name of contractor furnishing the security and duly pledged in favour of BHEL and discharged on the back)

v) Bank Guarantee from scheduled Banks/Public financial Institutions as defined in the companies Act subject to a maximum of 50% of the total security deposit value. The balance 50% has to be remitted either by cash or in the other form of security. The Bank Guarantee format should have the approval of BHEL.

vi) Fixed Deposit Receipt issued by scheduled Banks/Public Financial Institutions as defined in the Companies Act. The FDR should be in the name of the contractor, A/C BHEL, duly discharged on the back.

vii) Security Deposit can also be recovered at the rate of 10% from the running bills. However in such cases at least 50% of the Security Deposit should be collected before start of the work and balance 50% may be recovered from the running bills.

viii) EMD of the successful tenderer shall be converted and adjusted against the Security Deposit.

ix) The Security Deposit shall not carry any interest.

NOTE: Accepting of Security Deposit against Sl. No. (iv) and (vi) above will be subject to hypothecation or endorsement on the documents in favour on BHEL. However, BHEL will not be liable or responsible in any manner for the collection of interest or renewal of the documents or in any other matter connected therewith.

For extra items of work and deviated quantities, security deposit will be recovered at 10% of the value of deviated amount. The security deposit will be released as stipulated under clause 16(IV) of GCC.

17. ORDERS UNDER THE CONTRACT:

All orders, notices etc. to be given under the contract shall be in writing, type script of printed and if sent by registered post to the address given in the tender of the contractor , shall be deemed to have been served on the date when in the ordinary course they would have been delivered to him.

The contractor shall carry out without delay all orders given to him.

R.Palanikumar,
Dy. Mgr-Civil,BHEL-EDN

CONTACTOR (SIGN & SEAL)

18. ADMISSION TO SITE:

The contractor shall not enter on (other than inspection purposes) or take possession of the site unless permitted to do so by the Senior Engineer/Civil/E/C. The portion of the site to be occupied by the Contractor will be clearly defined and marked on the site plan, and the contractor will on no account be allowed to extend his operations beyond these areas.

The Contractor shall provide, if necessary, or required at the site, temporary access thereto and shall alter, modify and maintain the same as required from time to time. He shall take out and clear away the access route when no longer required restoring the area to its original conditions.

The Senior Engineer/Civil/E/C shall have power to execute other works (whether or not connected with the work in the contract agreement) in the site contemporaneously with the execution of the original work and contractor shall give reasonable facilities for this purpose.

BHEL, reserves the right of taking over, at any time, and portion of the site which they may require and the contractor shall at his own expense clear such portion forthwith. No photographs of the site or of the work or any part thereof shall be taken, published or otherwise circulated, without the prior approval of the Senior Engineer/Civil/E/C.

No such approval shall however exempt the contractor from complying with any statutory provisions in regard to the taking and publication of such photographs.

BHEL officials connected with the contract shall have the right of entry to the site at all times.

Senior Engineer/Civil/E/C shall have the power to exclude from the site any person whose admission thereto may, in his opinion, be undesirable for any reason whatsoever.

19. CONTRACTOR'S SUPERVISION:

The Contractor shall either himself supervise the execution of the Contract or shall appoint a competent Agent approved by the senior Engineer/Civil/E/C to act in his stead.

The contractor shall employ on Engineer/Agent having at least a 'Degree of Bachelor of Civil Engineering' from a recognised University/on any work with a Contract value exceeding rupees two lakhs and having at least a 'Diploma in Civil Engineering' from a recognised college on work with a contract value exceeding Rs. 50,000/- but not exceeding rupees two lakhs.

The employment of an Engineer/Agent as aforesaid, the Senior Engineer/Civil/E/C capable possession of a recognised technical qualification and is in opinion of the Senior Engineer/Civil/E/C capable of receiving instructions of the Engineer-in-charge and of executing the work to the satisfaction of the Engineer-in-charge.

If the contractor fails to appoint a suitable Engineer/Agent as aforesaid, the Senior Engineer/Civil/E/C shall have full powers to suspend the execution of work and stop payment of any advances that may have become due until such date as a suitable Engineer/Agent is appointed and the contractor shall be held responsible for the delay caused to the work and no extension of time on this account shall be given to him as stipulated in condition (9) above.
Orders given to the contractors Agent/Engineer shall be considered to have the same force as if they had been given to the contractor himself.

The contractor or his agent shall be in attendance at the site during all working hours and shall superintended the execution of work with such additional assistance in each trade as the Senior Engineer/Civil/E/C may consider necessary.

R.Palanikumar,
Dy. Mgr-Civil,BHEL-EDN

CONTACTOR (SIGN & SEAL)

The contractor or his accredited agent shall attend, when required and without making any claim for doing so, either the Office of the Engineer-in-charge or the work-site to receive instructions.

The Senior Engineer/Civil/E/C shall have full powers, and without assigning any reason, to require the contractor immediately to cease to employ in connection with this contract any agent, servant or employee whose continued employment is, in his opinion, undesirable.

The contractor shall not be allowed any compensation on this account.

20. LABOUR:

The contractor shall employ labour in sufficient numbers either directly or through sub-contractors to maintain the required date of progress and of quality to ensure workmanship of the degree specified in the contract and to the satisfaction of the Engineer-in-charge. The contractor shall not employ in connection with the works any person who has not completed his fifteen years of age.

The contractor shall furnish to the Engineer-in-charge at the intervals specified by him, a distribution return of the number and description by trades of the work people employed on the works. The contractor shall also submit on the 4th and 19th of every month to the Engineer-in charge a true statement showing in respect of the second half of the preceding month and the first half of the current month (i) the accident that occurred during the said fortnight showing the circumstances under which they happened and the extent of damage and injury caused by them and (ii) the number of female workers who have been allowed maternity benefit as provided in the maternity benefit Act, 1961 or Rules made there under and the amount paid to them.

The contractor shall pay to labour employed by him either directly or through sub-contractors wages not less than fair wages as defined in the contractor's labour regulations.

The contractor shall in respect of labour employed by him either directly or through sub-contractors comply with or cause to be complied with contractors Labour Regulations in regard to all matters provided therein.

The contractor shall comply with the provisions of the payment of Wages Act, 1936, Minimum Wages Act, 1948, Employers Liability Act 1938. Workman's Compensation Act, 1923, industrial Disputes Act, 1947, Maternity Benefit Act, 1961 and Mines Act 1952 or any other law relating thereto and rules and there under from time to time.

The contractor shall be liable to pay his contribution and the employees' contribution to the State Insurance Scheme in respect of all labour employed by him for the execution of the contract, in accordance with the provision "The Employees" State Insurance Act, 1948" as amended from time to time. In case the contractor fails to submit full details of his account of labour employed and the contribution payable, the Engineer-in-charge shall recover from the running bills of contractor an account of contribution as assessed by him. The amount so recovered shall be adjusted against the actual contribution payable for employees' State Insurance.

The Engineer-in-charge shall on a report having been made by an inspecting Officer as defined in the contractors labour regulations have the power to deduct from the moneys due to the Contractor any sum required or estimated to be required for making good the loss suffered by a workers by reason of non-fulfillment of the conditions of the contract for the benefit of workers, non-payment of wages or of deductions made from his or their wages which are not justified by the terms of the contract or non-observance of the contractors labour Regulations.

The contractor shall indemnify the BHEL against any payments to be made under for observances of the Regulations aforesaid without prejudice to his right to claim indemnify from this sub-contractors.

In the event o the Contractor committing a default or breach of any of the provisions of the aforesaid Contractors Labour Regulations, as amended from time to time or furnishing any information or submitting or filling any form/Resister/Slip under the provisions of these regulations which is materially incorrect then on the report of the Inspecting Officers as defined in the Contractors Labour Regulation, the contractor shall without prejudice to any other liability pay to the BHEL a sum not exceeding to Rs.50/- as liquidated damages for every default breach or furnishing, making, submitting, filling materially incorrect statement as may be fixed by the Engineer-in-charge and in the event of the contractors default continuing in this respect, the liquidated damages may be

R.Palanikumar,
Dy. Mgr-Civil,BHEL-EDN

CONTACTOR (SIGN & SEAL)

enhanced to Rs. 50/- per day for each day of default subject to a maximum percent of the estimated cost of woks put to tender.

The Engineer-in-charge shall deduct such amount from bills or security deposit of the contractors and credit the same to the Welfare fund constituted under Regulations. The decision of the Engineer-in-charge in this respect shall be final and binding.

MODEL RULES FOR LABOUR WELFARE:

The contractor shall at his own expense comply with or cause to be complied with model Rules for Labour Welfare as appended to these conditions as rules framed by Government from time to time for the protection of health and for making sanitary arrangements for workers employed directly or indirectly or the works. In case the contractor fails to make arrangements as aforesaid, the Engineer-in-charge shall be entitled to do so and recover the cost thereof form the Contractor.

SAFETY CODE:

The contractor shall at his own expense arrange for the safety provisions as appended to these conditions or as required by the Engineer-in-charge, in respect of all labour directly or indirectly employed for performance of the works and shall provide all facilities in connection therewith. In case the contractor fails to make arrangements and provide necessary facilities as aforesaid, the Engineer-in-charge shall be entitled to do so and recover the cost thereof from the contractor.

Failure to comply with model Rules for Labour Welfare, Safety Code, or of the provisions relating to report on accidents and to grand of maternity benefits to female workers shall make the Contractor liable to pay to the BHEL as liquidated damages an amount not exceeding Rs 50/- for each default or materially incorrect statement. The decision of the Engineer-in-charge in such matters based on reports from the Inspecting Officers as defined in the contractors Labour Regulation as appended to these conditions shall be final and binding and deductions for recovery of such liquidated damages may be made from any amount payable to the Contractor.

21. WATER :

The contractor shall allow in his tender and provide at his cost all water required for the work or his employees on the work, together with all pipes and fittings or other means that may be necessary or required to ensure a proper and ample supply of water for all purpose connected with the work.

In the event of a provision existing in the Tender documents for supply of water on payment by Bharat Heavy Electricals Limited, water will be supplied from the BHEL supply System, or other sources at any points fixed by the Senior Engineer/Civil on the site of work. The contractor shall make necessary arrangement for lifting, pumping, carrying or conveying the water as required at his own cost. The levy of water charges to be borne by the Contractor in such case shall be specifically mentioned in the Tender documents.

22. TEMPORARY WORKSHOPS, STORES ETC :

The Contractor shall, during the progress of the work provide, erect and maintain at his own expanses all necessary temporary workshops, store, offices etc., required for the proper and efficient execution of the work. The planning, sitting and erection of these bldgs. shall have the approval of the Engineer-in-charge and the Contractor shall at all times them tidy and in a clean and sanitary condition to the entire satisfaction of the Engineer-in-charge.

On compilation of the work all such temporary buildings shall be cleared away and the site restored and left in a clean and tidy condition to the entire satisfaction of the Engineer-in-charge.

R.Palanikumar,
Dy. Mgr-Civil,BHEL-EDN

CONTACTOR (SIGN & SEAL)

23. STORES AND MATERIALS ON SITE :

All stores and materials required for the work are to be deposited by the Contractor only in places to be indicated by the Engineer-in-charge.

Where in accordance with the contract stipulations certain Stores and Materials 9for incorporation in the work) are to be issued to the Contractor by the BHEL as detailed under Schedule 'E' such times will be so issued only to the extent required for the actual completion of the work as stipulated in the Contract. The decision of the Senior Engineer/Civil/E/C regarding the quantities to be issued as above shall be final and binding on the Contractor. For any excess quantities consumed on the work their cost will be recovered from the Contractor at punitive rates which will be 100% (hundred percent) more than the issue rates of the BHEL.

In regard to the materials and stores which may be issued to the contractor by BHEL the Contractor shall give the Engineer-in-charge reasonable notice in writing of his requirements of such stores and materials and on the approval of his demand being notified to him, he shall make immediate arrangements for drawing the same. Such stores and materials shall be transported by Contractor at his own expanses direct from the place of issue to the site of the work, unless prior written approval is obtained from the Engineer-in-charge to take them to a store or workshop elsewhere.

The Contractor shall have to build a weather-proof shed for the storage of cement required for 15 days consumption of the work.

BHEL officers connected with the Contract shall have the power at any time to inspect and examine any stores or materials indented to be used in or on the work, whether on the site or at any place where the same are lying and the contractor shall give necessary facilities for such inspection and examination.

The Engineer-in-charge shall be entitled to have tests made of any stores or materials supplied by the Contractor who shall provide at his own expanse all facilities which the Engineer-in-charge may require for this purpose. If at the discretion of the Engineer-in-charge an independent expert is employed to make any such tests his charges shall be borne by the contractor only if the test discloses that the said stores or materials are not in accordance with the provisions of the contract.

Should the Senior Engineer/Civil/E/C consider at any time during the construction or re-construction, on prior to the expiry of the 'MAINTENANCE PERIOD', that the stores or materials provided by the Contractor are unsound or of a quality inferior to that contract for, or otherwise not in-accordance with the Contract, (in respect whereof the decision of the Senior Engineer/Civil/E/C shall be final and conclusive) the contractor shall on demand, in writing from the Sr. E/C. E/C specifying the stores or materials complained of, not withstanding that the same may have been inadvertently passed, certified and paid for, forthwith remove the stores or materials so specified and provide other proper and suitable store or materials at his own expanse; to the entire satisfaction of the Sr. E/C. E/C and in the event of his failing to do so within a period to be specified by the Sr. E/C. E/C in his demand aforesaid, the Sr. E/C.E/C may replace within others the stores or materials complained of at the risk and expanse in all respects of the Contractor. The liability of the contractor under this condition shall not extend beyond the maintenance period aforesaid except as regards stores or materials, which the Sr. E/C.E/C shall have previously given notice of to the contractor to replace. (Maintenance period for any work under this organization will be six months from the date of actual completion of the particular work and handing over to BHEL).

All stores and materials brought to the site shall become and remains the property of BHEL and shall not be removed from the site without the prior written approval if the Senior Engineer/Civil/E/C. However, when the work is finally completed the Contractor shall at his own expanse forthwith remove from the site all surplus stores and materials originally supplied by him and upon such removal; the same shall rest in and become the property of contractor. All BHEL stores and materials issued to Contractor for incorporation or fixing in the work and which, making due allowance for reasonable wear and tear/or waste, have not on completion of the work been so incorporated of fixed, shall be returned by the Contractor at his own expanse to the place of issue.

Credit for surplus and/or materials returned by the contractor to BHEL will be given to him at a price based on the prevailing market rate but not exceeding that at which the said stores and materials were originally issued to him but due consideration shall be given to the allowance claimed by BHEL in respect of any depreciation or

R.Palanikumar,
Dy. Mgr-Civil,BHEL-EDN

CONTACTOR (SIGN & SEAL)

damages suffered by the stores and/or materials whilst in the custody of the contractor regarding which the decision of Sr. E/C/E/C shall be final and conclusive.

If , in the opinion of the Sr. E/C/E/C (which shall be final and conclusive) any stores supplied by BHEL have either during currency of the work or after completion of the work whilst under the custody of the contractor, become damaged to such an extent that they cannot be usefully utilized, either in the same work or in other works, the Sr. E/C.E/C shall not accept the stores and in the extent of his rejecting , the Contractor shall be charged for the said stores at a rate fixed by the Accepting Officer. The Contractor shall not be entitled to any claim what-so-ever on this account.

23a. DEFECTS LIABILYTY PERIOD:

the contractor shall be responsible to make good and remedy at his own expenses within such period as may be stipulated by the Engineer-in-charge, any defect which may develop or may be noticed before the expiry of the maintenance period of six months hereto from the certified date of completion and intimation f which has been sent to the contractor within seven days of the expiry of the said period by a letter sent by hand delivery or by registered post.

24. TOOLS AND PLANT ON SITE :

All tools, plant and equipment brought to the site shall become the property of BHEL and shall not be removed from the site without the prior written approval of the Senior Engineer/Civil/E/C. When the work is finally completed or the Contractor is determined for reasons other than the defaults of the contract, he shall forthwith remove from the site all tools, plants, equipment etc., (other than those as may have been provided by BHEL) and upon such removal, the same shall revert in, and become the property of the contractor.

25. STATEMENT OF HIRE CHARGES :

Monthly detailed statement of the hire charges incurred in respect of BHEL tools, plants, equipment etc., shall be given to the contractor by the Engineer-in-charge.

26. PRECAUTIONS AGAINST RISKS :

The contractor shall be responsible for providing at his own expense, for all precautions to prevent loss or damage from any and all risks and to minimize the amount of any such loss or damage and for the necessary steps to be taken for the said purpose until the works have been handed over complete in all respect to the Engineer-in-charge.

The contractor shall provide all watchmen necessary, for the protection of the site, the work, the materials, the tools, plant, equipment and anything else lying on the site during the progress of the work. He shall solely be responsible for and shall take all reasonable and proper steps for protecting, securing , lighting and watching all places on or about the work and the site which may be dangerous to any person whom so ever.

27. NOTICES AND FEES :

The contractor shall give all notices required by any statutory provision or by the regulations and/ or bye-laws of any local authority and / or of any Public Service, Company or Authority affected by the work or with whose system the same area or will be connected. The contractor shall pay and indemnify BHEL against any fees and charges, demandable by law under such Acts, Regulations and/ or bye-laws in respect of the work and shall make and supply all drawings and plans required in connection with any such notice.

28. SETTING OUT OF THE WORKS AND PROTECTIVE AND MAINTAINING SIGNALS AND WORKS :

R.Palanikumar,
Dy. Mgr-Civil,BHEL-EDN

CONTACTOR (SIGN & SEAL)

The engineer-in-charge shall supply dimensioned drawing, levels and other information necessary to enable the contractor to set out the work. The contractor shall at his own expense set out accurately according to the drawing and figured dimension thereon, all the work comprised in the contract and any extras or additions thereto and shall be solely responsible for their being so set out the executed.

All bench marks, pegs, signals, on the surface, alignment stones, milestones and all similar marks weather put in by BHEL Authority for the purpose of checking the contractors work or in the nature of permanent survey marks will during the tender of the contract, be under the care of the contractor who shall, at his own expense, take all proper and reasonable precautions and care to preserve and maintain them in their true position. In event of these marks being disturbed or obliterated by accident or due to any other cause whatsoever, the same may, if deemed necessary to replaced by the Sr.E/C/. E/C at contractors expense and the cost thereof deducted from any money than or thereafter becoming due to the contractor.

Where requested by the contractor, the level marks center line and chainage pegs corresponding to those shown on the drawing will be pointed out to the contractor on the ground but all bench marks or chainage pegs additional to those shown on the drawing will be set out by BHEL authorities.

29. SITE DRAINAGE :

All water that may accumulate on the site during the process of the work, or in trenches and excavations shall be removed to the entire satisfaction of the Engineer-in-charge and at Contractors expense.

30. EXCAVATIONS, RELICS ETC :

Material of any kind obtained from excavation on the site shall remain the property of BHEL and shall be disposed off as the Engineer-in-charge directs.

All gold, silver, oil and other materials of any description and all precious stones, coins, treasured, relics, antiquities and other similar items which may be found in or upon the site shall be the property of Bharat Heavy Electricals Limited and Contractor shall duly preserve the same to the satisfaction of the BHEL and shall from time to time deliver the same to such person or person as the Bharat Heavy Electricals Limited, may appoint to receive the same.

31. FOUNDATIONS :

The contractor shall not lay any foundations until the excavations for the same have been examined and approved in writing by the Engineer-in-charge.

32. COVERING-IN WORK :

The contractor shall give reasonable notice in writing to the Engineer-in-charge whenever any work is to be permanently covered up or concealed, whether by earth or other means so that it can finally be inspected or measured, if necessary. In default of so doing, the contractor shall, if required by the Engineer-in-charge uncover such work at his own expense.

33. APPROVL OF WORKS BY STAGES :

All work embracing more than one process shall be subject to examination and approval at each stage thereof and the contractor shall give due notice in writing to the Engineer-in-charge when each stage is ready. In default of such notice being received, the Engineer-in-charge shall be entitled to approve the quality and extent thereof at any time he may choose and in the event of any dispute, the decision of the Senior Engineer/Civil thereon shall be final and conclusive.

R.Palanikumar,
Dy. Mgr-Civil,BHEL-EDN

CONTACTOR (SIGN & SEAL)

34. EXECUTION OF THE WORK :

The work shall be executed in a workman-like manner and to the satisfaction in all respects of the Engineer-in-charge. The Engineer-in-charge will communicate or confirm his instructions to the Contractor in respect to the execution of the work in a "work Site Order Book" maintained at his office and contractor shall visit this office daily and shall confirm receipt of such instructions by signing the relevant entries in this book. Such entries will rank as order or notices in writing within the intent and meaning of these conditions.

35. DAY WORK :

No day-work shall be performed without the prior written instructions of the Accepting Officer.

The Contractor shall give to the Engineer-in-charge reasonable notice of the start of any work ordered to be executed by day-work and shall deliver to the Senior Engineer/Civil-in-charge/E/C within two days of end of each pay-week return in duplicate giving full detailed accounts of labour and materials for that pay week. One copy of each of these returns, if found correct, will be certified by the Engineer-in-charge and returned to the contractor and must be produced at the time of adjustment of accounts.

An invoice in duplicate signed by the Contractor or his agent shall be sent with each delivery of materials for day-work and the contractor will be furnished with a receipt signed by the Engineer-in-charge specifying the description, quantities weight or measurement (as the case may be) of the articles approved, reference will be made in this receipt in the return aforesaid and the receipt itself is to be produced in support of the Contractors bill.

In the case of Lump-sum contracts, the rates to be changed and the percentage addition for profit and establishment charges, etc, will be agreed upon between the Accepting Officer and the Contractor prior to the execution of the work.

36. INSPECTION OF THE WORK :

BHEL Offers concerned with the Contractor shall have power at any time to inspect and examine any part of the work and the contractor shall give such facilities as may be required to given for such inspection and examination.

Should E/C/E/C consider at any time during the expiry of maintenance period, that any work has been executed with unsound, imperfect or unskilled workmanship or of quality inferior to that contracted for or not otherwise in accordance with contract [in respect whereof the decision of the sir. E/C. shall be final and conclusive] the contractor shall, on demand in writing from the Sr. E/C.E/C specifying the fault notwithstanding that the same may have been inadvertently passed, certified and paid for, forthwith rectify or remove and reconstruct the work of specified, in whole or in part as the case may be require at his own expense to the entire satisfaction of the Sr. E/C. E/C in his demand aforesaid, the Sr. E/C. may carry out the work by other means at the risk and expense in all respect of the contractor. However, the liability of the contractor under this condition shall not extend beyond the maintenance period except as regard workmanship which the Sr. E/C .E/C shall have previously given notice to contractor to rectify.

37. RESPONSIBILITY FOR BUILDING :

In the event of any building ,or part of any building being handed over to the Contractor for the execution of work thereto under the provisions of the Contract, he shall give a written receipt for all fixtures, glass etc., and he shall be required make good at his own expense all damages resulting any cause whatsoever while in his charge and on completion of the work to deliver up the said building or part thereof a clean state complete in every particular to the entire satisfaction of the Engineer-in-charge.

R.Palanikumar,
Dy. Mgr-Civil,BHEL-EDN

CONTACTOR (SIGN & SEAL)

38. INSURANCE OF WORKS AGAINST DAMAGE AND LOSS DUE TO FIRE, TEMPEST, FLOODS, EARTHQUAKE, RIOT AND AGAINST DAMAGE BY AIR-CRAFT.(Not Applicable)

The contractor shall, within one month after the date of acceptance of the contract, insure the work against loss and damage by fire, tempest, floods, earthquake, riots and against damage by air-craft with an insurance office approved by the Accepting Officer. Such insurance shall be effected in the name of BHEL and shall be for the full value of the contract sum. The Contractor shall lodge with the BHEL policies and receipt of the premiums for such insurance and shall maintain such policies in force until the entire completion of the work as certified by the Senior Engineer/Civil/E/C.

If the contractor fails to comply with the terms of this condition that the Accepting Officer may insure the work and may deduct the amount of premiums from any money become payable to the contractor or may at his discretion refuse payment of any advances to the Contractor until the contractor shall complied with the terms of the condition.

Such insurance whether effected by the Accepting Officer or the Contractor shall not be a limit or bar to the liability and obligation of the contractor to complete the entire work in all respects as certified by the Senior Engineer/Civil/E/C.

In case of such a loss or damage as aforesaid, the money payable under any such insurance shall be received and may be retained by the BHEL until the work is finally completed and shall then be credited to the contractor in the final statement of accounts in the event of his contract not having been previously cancelled under these conditions.

39. DAMAGE AND LOSS TO PRIVATE PROPERTY & INJURY TO WORKMAN :

The contractor shall at his own expense reinstate and make good to the satisfaction of the Sr. E/C/E/C and pay compensation for any injury, loss or damage occasioned to any property or rights whatever including property and rights of BHEL, (or Agents, servants or employees of BHEL) the injury loss or damage arising out of or in any way in-connection with the execution of purported execution of the contract and further the contractor shall indemnify BHEL against all claims enforceable against BHEL (or any agent, servant or employee of BHEL or which would b so enforceable against BHEL) where a private person , in respect of any such injury (including injury resulting in death loss or damage to any person) whosoever or property, including all claims which may arise under the workman's Compensation Act or otherwise.

40. COMPLETION:

The works shall be completed to the entire satisfaction of the Engineer-in-charge and in accordance with the Contractors forecast of Time and Progress where operative, and all unused stores and materials, tools plant, equipment, temporary buildings, and things shall be removed and the site and cleared of rubbish and all waste materials and delivered up clean and tidy to the satisfaction of the Engineer-in-charge at the Contractors expense on/or before the Scheduled date of completion.

The BHEL shall have power to take over from the Contractor from time to time such sections of the work as have been competed to the satisfaction of the Engineer-in-charge.

The Senior Engineer /Civil/E/C shall certify to the Contractor the date on which the work is completed and the state thereof.

R.Palanikumar,
Dy. Mgr-Civil,BHEL-EDN

CONTACTOR (SIGN & SEAL)

The Senior Engineer/Civil/E/C shall also certify, to the Contractor the state of the work at the end of the maintenance period, where applicable.

41. COMPENSATION FOR DELAY:

If the contractor fails to maintain the required progress in terms of condition 7 or to complete the work and clear the site on or before the contracted or extended the period of completion, he shall, without prejudice to any other right or remedy of the BHEL on account of such breach, pay as agreed compensation an amount calculated as stipulated below or such smaller amount as may be fixed by the BHEL on the contract value of the work for every week that the progress remains below that specified in condition 7 or that the work remains incomplete.

This will also apply to items or a group of items for which separate period of completion has been specified.

For this purpose the term 'contract value' shall be the value at contract rates of the work as ordered.

a)	completion period (as originally stipulated) not exceeding 6 months.	……	@ 1 percent per week
b)	Completion period (as originally stipulated) Exceeding 6 months and not exceeding 2 years	……	@ 1 / 2 percent per week
c)	Completion period (as originally stipulated) exceeding 2 years	…..……	@ 1 / 4 percent per week

Provided always that the total amount of compensation for delay to be paid under condition shall not exceed the under noted percentage of the contract value or of the contract value of the item of group of items of work for which a separate period of completion is given :

b)	completion period (as originally stipulated) not exceeding 6 months.	……	@ 10 percent of the contract value
b)	Completion period (as originally stipulated) Exceeding 6 months and not exceeding 2 years	……	@ 71/2percent of the contract value
c)	Completion period (as originally stipulated) Exceeding 2 years	…..…..	@ 5 percent of the contract value

The amount of compensation may be adjusted or set off against any sum payable to the Contractor under this or any other contract with the BHEL.

42. LAWS GOVERNING THE CONTRACT :

This contract shall be governed by the Indian Laws for the time being in force.

43. CANCELLATION OF CONTRACT FOR CORRUPT ACTS :

The Accepting Officer, whose decision shall be final and conclusive, shall, without prejudice to any other right or remedy which shall have accrued or shall accrue thereafter to Bharat Heavy Electricals Limited, cancel the contract in any of the following cases and the contractor shall be liable to make payment to BHEL for any loss or damage resulting from any such cancellation to the same extent as provided in the case of cancellation for default.

R.Palanikumar,
Dy. Mgr-Civil,BHEL-EDN

CONTACTOR (SIGN & SEAL)

If the contract shall:

a) Offer or give or agree to give to any person in BHEL, service any gift or consideration of any kind as an inducement or reward for doing or forbearing to do or for having done or forborne to do any act in relation to the obtaining or execution of this or any other contract for BHEL service,

OR

b) Enter into a contract with BHEL in connection with which commission has been paid or agreed to be paid by him or with his knowledge, unless the particulars of any such commission and the terms of payment thereof have previously been disclosed in writing to the Accepting Officer,

OR

c) Obtain a contract with BHEL as a result of RING tendering or by non-bonafide methods of competitive tendering without first disclosing the fact in writing to the Accepting Officer.

44. CANCELLATION OF CONTRACT FOR INSOLVENCY, ASSIGNMENT OR TRANSFER OR SUB LETTING OF CONTRACT :

The Accepting Officer, without prejudice to any other right or remedy which shall have accrued or shall accrue thereafter to BHEL shall cancel the contract in any of the following cases:-
If the contractor:

a) Being an individual, or if a firm any partner thereof, shall at any time be adjusted bankrupt or have a receiving order or orders for administration of his Estate made against him of shall take any proceeding, for liquidation or composition under Bankruptcy Act for the time being in force or make any conveyance or assignment of his effects of composition or arrangements for the benefit of his creditor or purport to do so, or if any application be made under any Bankruptcy Act for the time being in force for the sequestration of his estate or if a trust deed be granted by him on behalf of his creditor;

OR

b) Being a company, shall pass a resolution or the court shall make an order for the liquidation of its affairs, or a Receiver or a Manager or behalf of the departures holders shall be appointed or circumstances shall arise which entitle the court or debenture holders to appoint a Receiver or Manager;

OR

c) Assigns, transfers, sub-let or attempt to assign transfer or sub-let any portion of the work without the prior return approval of the Accepting Officer.

Whenever the Accepting Officer exercise his authority to cancel the contract under this condition he may complete the work by any means at the contractor risk and expense provided always that in the event of the cost of completion (as certified by Sr. E/C/E/C which is the final and conclusive) being less than the contract cost, the advantage shall accrue to the BHEL and that if the cost of completion exceeds the moneys due to the contractor under the contract, the contractor shall either pay the excess amount ordered by Sr. E/C/E/C or the same shall be recovered from the contractor by other means.

In case of BHEL completes the work under the provisions of this condition of cost of such completion to be taken into account in determining the excess cost to be charged to the contractor under this condition shall consist of this cost of material purchased and /or labour provided by the BHEL with an addition of such percentage to cover superintendence and establishment charges as may be decided by the Sr. Manager (P) Sr. E/C/E/C whose decision shall be final and conclusive.

45. CANCELLATION OF CONTRACT IN PART OR IN FULL FOR CONTRACTORS DEFAULT :

If the contractor;

Makes default in commencing the work within reasonable time form date of handing over of the site and continuous in that state after a reasonable notice from senior/Engineer /Civil E/C;

OR

R.Palanikumar,
Dy. Mgr-Civil,BHEL-EDN

CONTACTOR (SIGN & SEAL)

a) In the opinion of the Sr. E/C/E/C at any time, whether before or after the date or extended date for completion, make default in proceeding with the work, with due diligence and continues in that state after a reasonable notice from Sr.E/C/E/C.

b) Fails of comply with any of terms and conditions of the contract or after reasonable notice in writing with orders properly issued there under :

c) Fails to complete the work, work order and items of work with individual dates for completion and clear the site on or before the date of completion, or fails to achieve the progress as set out under clause 7 of these General Conditions of Contract.

The Accepting Officer may, without prejudice to any other rights or remedies which shall have accrued or shall accrue thereafter to BHEL cancel the contract as a whole or in part thereof or only such work order or items of work in default from the contract. Whenever the Accepting Officer exercises his authority to cancel the contract as a whole or in part under this condition he may complete the work at the contractor risk and cost, provided always that in the events of the cost of completion (has certified by Sr. E/C/E/C which is final and conclusive) being less than the contract cost, the advantage shall accrue to the BHEL if the cost of the excess amount ordered by Sr. M.P./Sr. E/C/E/C or the same shall be received from the contractor by other means.

In case of BHEL completes the work or any part thereof under the provisions of this condition the cost of such completion to be taken into account in determining the excess cost to be charged to the contractor under this condition shall consist of the cost of the material purchased and /or labour provided by the BHEL with an addition of such percentage to cover superintendence and establishment charges as may be decided by the Sr. M.P. /Sr. E/C/E/C. whose decision shall be final and conclusive.

46. TERMINATION OF CONTRACT OF DEATH :

Without prejudice to any of the rights or remedies under this contract, if the contractor dies, Accepting Officer shall have the opinion of terminating the contract without compensation to the contractor.

47. SPECIAL POWER OF DETERMINATION:

If at any time after the Acceptance of the tender, BHEL shall for any reason whatsoever not required the whole or any part of the work, to be carried out, the Sr. M.P./Sr. E/C/E/C shall give notice in writing of the fact to the contractor who shall have no claim to any payment of compensation or otherwise howsoever on account of any profit or advantage which he might have derived from the execution of the work in full but which he did not derive in consequence of the force closing of the work.

He shall be paid at Contact rate, for the full amount of the work executed including such additional works, e.g. clearing of site, etc., as may be rendered necessary by the said fore-closing. He shall also be allowed reasonable payment (as decided by the Accepting Officer) for any expenses sustained on account of labour and materials collected but which could not be utilised on the work, as verified the Sr. E/C Neither shall the contractor has any claim for compensation on account of any alterations having been made in the original specifications drawings, designs and instructions, involving any curtailment of the work as originally contemplated.

48. FAIR WAGE :

a) The Contractor shall pay not less than the 'Fair Wage' to labourers engaged by him on the work.
'Fair Wage' means wage whether for time or piece work notified at the time of inviting tenders for the work and where such wages have not been notified, the wages prescribed by the Sr. Manager/Projects/Sr.E/C/E/C for the stations at which the work is done.

R.Palanikumar,
Dy. Mgr-Civil,BHEL-EDN

CONTACTOR (SIGN & SEAL)

b) The contractor shall, notwithstanding the provision of any contract to the contrary, cause to be paid a 'Fair Wage' to labourers indirectly engaged on the work, including any labour engaged by his sub-contractors in connection with the said wok, as if the labourers had been directly employed by him.

c) In respect of all labours directly or indirectly employed on the work for the performance of the contractors part of this Agreement, the contractor shall comply with or cause to be complied with the BHEL contractor's labour Regulations (appended hereto as Annexure 'A' to these conditions) in regard to payment of wages, wage period, deductions from wages, recovery of wages, not paid and deductions, unauthorisedly made, maintenance of wage book, wage slips, publication of scale of wages and other terms of employment, inspection and submission of periodical returns and all other matters of a like nature.

d) The Senior Engineer /Civil/E/C concerned shall have the right to deduct from the moneys due to the Contractor any sum required or estimated to be required for making good the loss suffered by a worker or workers by reason of non-fulfillment of the condition of the contract for the benefit of the workers, non-payment of wags or of deductions made from this or their wages which are not justified by the terms of the contract or non-observance of the regulations.

e) Vis-à-vis BHEL the Contractor shall be liable primarily for all payments to be made under the contract and for the observances of the Regulations aforesaid without prejudice to his right to claim indemnity from his sub-contractor's.

f) The regulations aforesaid shall be deemed to be a part of this contract and any breach thereof shall be deemed to be a breach of this contract.

CHAPTER-IV

VALUATION AND PAYMENT

49. RECORDS AND MEASUREMENTS :

All items having a financial value shall be entered in the BHEL Measurement Book so that a complete record is obtained of all works performed under the contract.

Building etc. priced in schedule 'A' as a unit lump-sum will be entered by number at the unit lump-sum.

Work carried out for agreed lump-sums will be described and similarly recorded.

R.Palanikumar,
Dy. Mgr-Civil,BHEL-EDN

CONTACTOR (SIGN & SEAL)

Lump-sum omissions will be entered for deduction. Measurement shall be restricted to that required to ascertain the financial liability of BHEL under the contract.

Work which fails to be measured in detail shall be measured physically, without reference to any local custom that may obtain excepting where it may otherwise be directed I the tender documents. The measurements shall be taken jointly by any person duly authorised on the part of the BHEL and by the contractor. The Engineer-in-charge shall give reasonable notice in writing to the Contractor of appointment for measurement.

The contractor shall, without extra charge, provide assistance with appliances and other things necessary for measurement.

The Contractor shall bear all the cost of measurement of his work.

Measurement shall be entered in the BHEL Measurement book and signed and dated by both parties each day at the site on completion of measurement. If the contractor objects to any of the measurement recorded on behalf of the BHEL a note that effect will be made in the BHEL measurement book or against the item or items objected to; and such note shall be signed and dated by both the parties engaged in taking the measurement.

If, as a result of such objection, it becomes necessary to re-measure the work wholly or in part, the expense of such re-measurement shall be borne by the party requiring the, measurement to be re-taken provided that a net error is found by this re-measurement to amount to less than 5% (five percent) of the value as recorded by the first measurement. But, where the net errors amount to 5% and ever of the said value, then the cost is to be borne by the other party. If any case, of the net value of errors found exceeds Rs. 500/- the expense of re-measurement is to be borne by the other party.
If the Contractors representative fails to attend when required, the Engineer-in-charge shall have power to proceed by himself to take measurements and in that case these measurements shall be accepted by the Contractor as final.

The contractor shall, once every month submit to the Senior Engineer/Civil/E/C with a copy to the Sr. M/P/details of his claims for the work done by him up to and including the previous months which are not covered by his contract Agreement in any of the following respects.

a) Deviation from the items and Specifications provided in the contract documents.

b) Extra items/New items of work.

c) Quantities in excess of those provided in the contract schedule.

d) Items in respect of which rates have not been settled. He should, in addition, furnish a clear certificate to the effect that the claims submitted by him as aforesaid cover all his claims and that no further claims shall be raised by him in respect of the work done upto and including the period under report.

50. VALUATION OF DEVIATIONS :

Rate for deviated items of work will be fixed as follows:

I. For any item of wok required to be carried out after the contract has been awarded and which is not covered by Contractors Schedule but is covered by K.P.W.D. schedule of rates the rate payable for such a fresh item will be derived from K.P.W.D. Schedule by the method of proportion as follows:

R.Palanikumar,
Dy. Mgr-Civil,BHEL-EDN

CONTACTOR (SIGN & SEAL)

a) IN the same proportion to the rate in K.P.W.D. Schedule of Rates as the tendered rate for the nearest analogous items of work in Contractors Schedule bears to the rate for the particular analogous item or wok in K.P.W.D. schedule of Rates.

b) If a single appropriate analogous item of work is not available in both Schedule Contractor's and K.P.W.D. Schedule then the method of proportion will be applied to the nearest analogous group of items available in both the Schedules referred i.e. in the same proportion as the total tendered cost of that particular group of items (the sum of the products of the tendered rates and the quantities for which orders are placed) bears to the total cost of the same items and quantities at the K.P.W.D.Schedule of Rates.

c) If even an appropriate analogous group of items is not available in Contractor's Schedule and K.P.W.D. Schedule, then the methods of proportion will be applied to all those items of the whole work, which are available in both the Schedules and for which orders have been placed on the Contractor, i.e., In the same proportion as the total cost of all these items of work (the sum of the products of the tendered rates and the quantities for which orders are placed) bears to the total cost of the same items and quantities at the K.P.W.D. Schedule of Rates.

II. If any work not covered by any of the foregoing is ordered on the Contractor, the basis of payment shall be decided by the Accepting Officer whose decision shall be final and conclusive and binding on the parties.

The selection of analogous item or analogue group of items referred to above shall be done by the Sr. E/C./E/C. Where the rates for deviated items or new items of work can be derived by the selection of different analogous items or analogous group of items, the lowest of all such derived rates shall be taken as the correct rate. In the case of the contracts for which the Sr. E/C.,E/C is the Accepting Officer, all disputes regarding the settlement of rates of deviated or new items of work shall to the Sr. M/P. whose decision shall be final and conclusive.

51. REIMBURSEMENT/REFUND ON VARIATION IN PRICE, MATERIALS :

In after submission of the tender and/or during the progress of the works, the price of any materials (not being a material supplied from the BHEL, stores in accordance with the Conditions of the Contract) is increased or decreased by an Act of Legislature (Central or state) and /or any notification there under or on account of new duties or levies such as Octroi or on account of increase or decrease in such duties affecting the price of materials required for incorporation in the works or the price of any item to be incorporated in the works and made from materials of which the price has increased or decreased as aforesaid and the Contractor has thereupon to pay in respect of such material or item a price which is higher or lower than the price of that material or item as prevailing immediately before the passing of such Act or levying, increasing/decreasing of such duty, the BHEL., shall in case of increase in price or the duty reimburse the Contractor the increase in price or additional increased duty paid by the Contractor and in case of decrease I price, the BHEL shall be entitled to a refund of the reduction in duty. Provide however no reimbursement or refund shall be made if the increase /decrease is not more than plus 10% of the said price, the reimbursement or refund shall be made only on the excess over 10% provided always that any such increase shall not payable if, in the opinion of the Sr. M/P whose decision shall be final and conclusive the increase is attributable to the delay in the execution of the contract within the control of the Contract, or that any such increase has become operative after the contracted/or extended date completion of the work or items of work in question.

The Contractor shall, for the propose of this condition, keep such books of account and other document as are necessary to show the account of any increase claimed or any reduction available and shall allow inspection of the same by any duly authorized representative of the BHEL and further shall at the request of the Sr, E/C/E/C. furnish for verification such other information of the Sr. E/C/E/C may require.

R.Palanikumar,
Dy. Mgr-Civil,BHEL-EDN

CONTACTOR (SIGN & SEAL)

The contractor shall within a reasonable time of his becoming aware of any alteration in the prices of any such materials, give notice thereof in writing to the Sr. E/C.E/C stating that the rate is submitted in pursuance to this condition together with all information relating thereto which he may be in a position to supply.

52. ADVANCES ON ACCOUNT :

No payment shall be made for work estimated to cost less than Rupees One Thousand till after the whole of the work shall have been completed and a certificate of completion given by the Competent authority.

In the case of work estimated to cost more than Rupees One Thousand the contractor may at intervals of not less than one month or as otherwise provided for in the Contract documents, counting from the date on which order to the commence work given by Sr. E/C.E/C submit claims on BHEL forms for payment of advance on account of work done and of materials delivered in connection with the Contract.

The Contractor shall be paid in respect of such claims to the extent approved and passed by the Sr. E/C.E/C subject a maximum of 90% o the value of the work actually executed in site provided the work has been executed to the satisfaction of the Engineer-in-charge. The certificate of the Sr. E/C. E/C regarding such approval and passing of the sums so payable shall be final and conclusive against the Contractor.

"After the full amount of Security Deposit is made up through the 10% deductions from 'On Account' bills, 100% of all subsequent bills may be made to the Contractor".

The Contractor may also be paid during the progress of the work 75% of the value of any materials which are in the opinion of the Engineer-in-charge in accordance with contract, and are actually required for incorporation in the work and which have reasonably been brought to the site in-connection therewith and are adequate stored an/or protected against damage by weather or other causes, but which have not at the time of payment of the advance been incorporated in the work. Payment of such advances however shall be purely at the discretion of the Sr. M/P/Sr.E/C.,/E/C provided always that payments shall not be made under these periodical certificates in respect of perishable materials like lime, cement, timber, sand kankar etc.

Any sums/due from the Contractor on account of tools and plant, stores or any other items provided by BHEL shall be deducted from the respective advances.
The Senior Engineer/Civil/E/C shall from time to time certify the sums payable to the Contractor after retaining the reserves.

Any certificate relating to work done or materials delivered may be modified or corrected by any subsequent interim certificate or by the final certificate and no certificate of the Sr. E/C/E/C supporting an advance payment shall itself be conclusive evidence that any work or materials to which it relates are in accordance with the contract. All such intermediate payments shall be regarded as advances against the final payment only and shall not be considered as an admission of the due performance of the contract or any part thereof in respect or the accruing of any claim whatsoever. Such intermediate payments shall not conclude, determine or effect in any way the powers of the Sr. E/C/E/C as to the final settlement and adjustment of the account or otherwise, or in any way vary or affect the Contract.

53. FINAL BILL :

As soon as possible after the completion of the work to the satisfaction of the Engineer-in-charge, the contractor shall forward a certified final account on BHEL forms, in duplicate. It shall be accompanied by all abstracts, vouchers etc., in support thereof and shall be prepared in the manner prescribed by the Senior Engineer /Civil/E/C. No claim will be entertained after the receipt of the final bill.

The contractor shall be entitled to be paid the final sum less the value of payments already made on account, subject to certification of the final bill by the Sr. E/C/E/C any sums due from the contractor on account Tools and plant, Stores or any other items provided by BHEL not yet recovered from the contractor shall be deducted from the final sum aforesaid.

R.Palanikumar,
Dy. Mgr-Civil,BHEL-EDN

CONTACTOR (SIGN & SEAL)

No charge shall be allowed to the contractor on account of the preparation of the final bill.

54. PAY MENT OF BILLS :

All payments to be made to the Contractor under this contract shall be by "Crossed Cheque" marked "A/C payee only" (within a reasonable time after the certification by the Sr. E/C/E/C at the…… ……..located in the station where either the work is executed or service rendered or at their branch nearest to the station where the Office of the Senior Engineer/Civil/E/C is located.)

55. RECOVERY FROM CONTRACTOR :

Whenever under the contract any sum of money shall be recoverable from or payable by the contractor the same may be deducted from any sum then due or which at any time thereafter may become due to the contractor under the contract or under any other contract with BHEL of from his Security Deposit or he shall pay the claim on demand.

56. POST TECHNICAL AUDIT OF WORK AND BILLS :

BHEL reserve the right to carry out a post-payment audit and technical examination of the work and final bill including all supporting vouchers, abstract etc., and to enforce recovery of any sums becoming due as a result thereof in the manner provided in the proceeding sub-paragraph's provided however that no such recovery shall be enforced after three years of passing the final bill.

57. REFUND OF SECURITY DEPOSIT :

50% of the Security Deposit mentioned in condition 16 above, may be refunded to the contractor in respect all contract on completion of work and after payment of final bill and the balance 50% on expiry of the maintenance period, (Described under clause 23) provided the contractor shall have rendered a "No Demand Certificate." In case of works where maintenance period is not involved 100% of the security deposit may be refunded after payment of final bill provided that the contractor shall have rendered a "No Demand Certificate."

58. ARBITRATION :

Except where otherwise provided for in the contract all question and disputes relating to the meaning of the specifications, design, drawings and instructions herein before mentioned and as to the quality of workmanship or materials used on the work or has been other questions, claim, right, matter or thing whatsoever in any way arising out of or relating to the contract, design, drawing, specification, estimate, instruction, orders or these conditions or otherwise concerning the works of the execution of failure to execute the same whether arising during the program of the work or after the completion or abandonment thereof shall be referred to the sole arbitration of the Managing Director/Chief Engineer of BHEL and if the Managing Director/Chief Engineer is enable or unwilling to Act, to a sole arbitration of some other person appointed by the Managing Director/General Manager/Chief Engineer, willing to Act s such arbitrator. The cases referred to arbitration shall be other than those for which the decision of the Sr. M/P./D.C.E/Sr.E/C. is expressed in the contract to be final and conclusive. There will be no objection if the arbitrator so appointed is an employee of BHEL and that he had deal with the matters to which the contracts relates and that in the course of his duties such he had expressed views of on all or any of the matters in dispute or difference. The arbitrator to whom to matter is originally referred being transferred by vacating his office or being enable to act for any reason, such Managing Director/ General Manager/Chief Engineer as aforesaid at the time of such transfer, vacation of office or inability to act, shall account another person to act as arbitrator in accordance with the terms of the contract, such person shall be entitled to proceed with the reference from the state at which it was left by his predecessor.

R.Palanikumar,
Dy. Mgr-Civil,BHEL-EDN

CONTACTOR (SIGN & SEAL)

Subject as aforesaid the provision of the Arbitration Act, 1940 or any statutory modification or re-enactment thereof and the rules made there under and for the time being in force shall apply to the arbitration proceeding under this clause.

It is a term of contract that the party involving arbitration shall specify the dispute or disputes to be referred to arbitration under this clause together with the amount or amounts claimed in respect of each such dispute.

The arbitrator (s) may from time to time with consent of the parties enlarge the time, for making and publishing the awards.

The work under the contract shall, if reasonable possible, continue during the arbitration proceedings and no payment due to payable to the contractor shall be withheld on account of such proceedings.

The Arbitrator shall be deemed to have entered on the reference on the date he issue notice to both the parties fixing the date of the first hearing.

The Arbitrator shall give a separate award in respect of each dispute or difference refereed to him.

The venue of arbitration shall be such place as may be fixed by the arbitration in his sole discretion.

The award of the arbitrator shall be final, conclusive and binding all parties to this contract.

R.Palanikumar,
Dy. Mgr-Civil,BHEL-EDN

CONTACTOR (SIGN & SEAL)

ANNEXURE- 'A'
BHEL CONTRACTOR'S LABOUR REGULATIONS.
(See condition 20)

1. DEFINITION:

In these regulations, unless otherwise expressed or indicated, the following words and expressions shall have the meaning hereby assigned to them.

a) "Labour" means workers employed by a contractor directly or indirectly through a sub-contractor, or by an agent on his behalf on a payment not exceeding Rs. 500/- per month.

b) " Fair Wage" means wages, which shall include wages for weekly day of rest and other allowances, whether for time or piece work, after taking in to consideration prevailing market rates for similar employment in the neighborhood but shall not be less than the minimum rates of wages fixed under the Minimum wages Act.

c) "Contractor" for the purpose of these Regulations shall include on agent or sub-contractor employing labour on the wok taken on contractor.

d) "Inspecting Officer" means any Labour Enforcement Officer or Assistant Labour Commissioner of the Chief Labour Commissioner's organization.

e) "Form" means a form appended to these Regulations.

2. NOTICE OF COMMENCEMENT:

The contractor shall, within seven days of commencement of the work, furnish in writing to the Inspecting Officer of the area concerned the following information, with copy to the Engineer- in charge.

a) Name and situation of the work.

b) Contractor's name and address.

c) Particulars of the Department for which the work is undertaken.

d) Name and address of the sub-contractors as and when they are pointed.

e) Commencement and probable duration of the work.

f) Number of workers employed and likely to be employed.

g) 'Fair Wages' for different categories of workers.

3. I) Number of hours which shall constitute a normal working day. The number of hours which shall constitute a normal working day for an adult shall be NINE hours. The working day of an adult worker shall be so arranged that of intervals, if any for rest it shall not spread over more than 12 hours on any day, when an adult worker is made to work for more than NINE hours on any day or for more than 48 hours in any week he shall in respect of overtime work, be paid wages at double the ordinary rate of wages.

II) Weekly day of rest: Every worker shall be given a weekly day of rest, which shall

be fixed and notified at least 10 days in advance. A worker shall not be required or allowed to work on the weekly rest day unless he has or will have a substitution rest day, on one of the five days immediately before or after the rest day, provided that no substitution shall be made which will result in the worker working for more than 10 days consecutively without a rest day for a whole day.

Where in accordance with the foregoing provisions a worker works on the rest day and has been given a substituted rest day he shall be paid wages for the work done on the weekly rest day at the overtime rate of wages.

NOTE: The expression 'Ordinary rate of wages' means the fair wage the worker is entitled to.

R.Palanikumar,
Dy. Mgr-Civil,BHEL-EDN

CONTACTOR (SIGN & SEAL)

4. DISPLAY OF NOTICE REGARDING WAGES, WEEKLY DAY OFF REST ETC.

The Contractor shall before he commences his work on contract display and correctly maintain and continue to display and correctly maintain in a clean legible condition in conspicuous places on the works, notice in English and in the local Indian languages, spoken by majority of workers, giving the rate of fair wages, the hours of work for which such wages are payable, the weekly rest days workers are entitled to and name and address of the Inspecting Officer. The Contractor shall send a copy of each of such notice to the Inspecting Officers and the Engineer's in charge.

5. FIXATION OF WAGE PEIODS:

The contractor shall fix wage periods in respect of which wages shall be payable. No wage period shall normally exceed one work.

6. PAYMENT OF WAGES:

i) Wages due to every worker shall be paid to him direct. All wages shall be paid in current coins or currency or in both.

ii) Wages of every worker employed on the contractor shall be paid where the wages period is one week, within three days from the end of the wage period, and in any other case before the expiry of the 7th day or 10th day from the end of the wage period according as the number of workers does not exceed 1,000 in exceeds 1000.

iii) When employment of any worker is terminated by or on behalf of the contractor, the wages earned by him shall be paid before expiry of the day succeeding the one on which his employment is terminated.

iv) Payment of wages shall be made at the work site on a working day except when the work is completed before expiry of the wage period, in which case final payment shall be made at the work site within 48 hours of the wage period, in which case final payment shall be made at the work site within 48 hours of the last working day and during normal working time.

Note:

The term "working day" means a day on which the work, on which labour is employed, is in progress.

REGISTER OF WORKMEN:

A register of workmen shall be maintained in the form appended to these regulations and kept at the work site or as near to it as possible, and the relevant particulars of every work men shall be entered therein within 3 days of his employment.

8. EMPLOYMENT CARD:

The contractor shall issue an employment card in the form appended to these regulations to each worker on the day of work or entry into his employment. If a worker has already any such card with him issued by the previous employer the contractor shall merely endorse that employment card with relevant entries. On termination of employment the employment card shall again be endorsed by the contractor and returned to the worker.

R.Palanikumar,
Dy. Mgr-Civil,BHEL-EDN

CONTACTOR (SIGN & SEAL)

9. REGISTER OF WAGES ETC:

i) A register of wages- cum-muster roll in the form appended to these regulations shall be maintained and kept at the work site or as near to it as possible.

ii) A wage slip in the form appended to these regulations shall be issued to every worker employed by the contractor at least a day prior to disbursement of wages.

10. FINES AND DEDUCTIONS WHICH MAY BE MADE FROM WAGES:

i) Wages of worker shall be paid to him without any deductions of any kind except the following:

a) Fines.

b) Deductions for absence from duty, i.e. from the place or the places where by the terms office employment is required to work. The amount of deduction shall be in proportion to the period for which he was absent.

c) Deduction for damage to or loss of goods expressly entrusted to the employed person for custody, or for less of money which he is required to account for, where such damage or loss is directly attributable to his neglect or default ;

d) Deduction for recovery of advances or for adjustment of over payment of wages. Advances granted shall be entered in a register ; and

e) Any other deduction which the BHEL may from time to time allow.

ii) No fines shall be imposed on a worker save in respect of such acts and omissions on his part as have been approved by the chief Labour Commissioner.

iii) No fines shall be imposed on a worker and no deductions for damage for loss shall be made from his wages until the worker has been given an opportunity of showing – cause against such fines or deductions.

iv) The total amount of fines which may be imposed in any one wage period on a worker shall not exceed an amount equal to three Paise in rupee of the wages payable to him in respect of that wage period.

v) No fine imposed on a worker shall be recovered from him in installments, or after expiry of sixty days from the date on which it was imposed. Every fine shall be deemed to have been imposed on the day of the act or omission in respect which it was imposed.

vi) The contractor shall maintain both in English and the local Indian language a list, approved by the Chief labour Commissioner, clearly stating the acts and omissions for which penalty or fine may be imposed on a workman and display it in good condition a conspicuous place on the work site.

vii) The contractor shall maintain a register of deductions for damage or loss in the forms appended to these regulations which should be kept at the place of work.

a) Full particulars of the labourers who met with the accident.

b) Sex.

c) Age.

d) Rates of wages.

e) Nature of accident and cause of accident.

f) Time and date of accident.

g) Date and time when admitted in hospital.

h) Date of discharge from the hospital.

i) Period of treatment and result of treatment.

j) Percentage of loss of earning capacity and disability as assessed by Medical officer.

R.Palanikumar,
Dy. Mgr-Civil,BHEL-EDN

CONTACTOR (SIGN & SEAL)

k) Claim required to be paid under Workmen Compensation Act.

l) Date of payment of compensation.

m) Amount paid with details of the person to whom the same was paid.

n) Authority by whom the compensation was assessed.

o) Remarks.

11. REGISTER OF ACCIDENTS:

The contractor shall maintain a register of accidents in such form as may be convenient at the work place but the same shall include the following particulars :-

12. PRESERVATION OF REGISTERS:

The register of workmen and the Register of wages-Cum-Muster Roll required to be maintained under these Regulations shall be preserved for 3 years after the date on which the last entry is made therein.

13. ENFORCEMENT:

The Inspecting Officer shall either on his own motion or on a complaint received by him carry out investigations and send a report to the Engineer-in-charge specifying the amount representing / workers dues and amount of penalty to be imposed on the contractor for breath of these regulations, that have to be recovered from the contractor, indicating full details of the recoveries proposed and the reasons, there for. It shall be obligatory of the part of the Engineer-in-charge on receipt of such a report to deduct such amounts from payments due to the contractor.

14. DISPOSAL OF AMOUNTS RECOVERED FROM THE CONTRACTORS:

The engineer in charge shall arrange payment to workers concerned within 45 days from receipt of a report from the Inspecting Officer except in cases where the contractor had made an appeal under regulation, 16 of these regulations. In cases where there is an appeal, payment of worker dues would be arranged by the Engineer in charge, wherever such payments arise, within 30 days from the date of receipt of the decision of the Regional Labour Commissioner (RLC).

15. WELFARE FUND:

All moneys that are recovered by the Engineer-in-charge by way of workers due which could not be disbursed to workers within the time-limit prescribed above, due to reasons such as where about or workers not being known, death of a worker, etc., and also amounts recovered as penalty, shall be credited a fund to be kept under the custody or BHEL for such benefits and welfare of work man employed by the contractors.

16. APPEAL AGAINST DECISION OF INSPECTING OFFICER:

Any person aggrieved by a decision of the Inspecting Officer may appeal against such decision to the Regional Labour Commissioner concerned within 30 days from the date of decision, forwarding simultaneously a copy of his appeal to the Engineer-in-charge. The decision of the Regional Labour Commissioner Shall be final and binding upon the contractor and the work men.

17. REPRESNTATION OF PARTIES:

i) A workmen shall be entitled to be represented in any investigation or enquiry under these Regulations by an officer of a registered trade union of which the said trade union is affiliated or where the work man is not a member of any registered trade union, by an officer of a registered trade union, connected with, or any other workmen employed in, the industry in which the worker is employed.

ii) A contractor shall be entitled to be represented in any investigation of enquiry under these Regulation by an officer of an association of contractors of which he is member or by an officer of a Federation of associations of contractors to which the said association is affiliated or where the contractor is not a member of any

R.Palanikumar,
Dy. Mgr-Civil,BHEL-EDN

CONTACTOR (SIGN & SEAL)

association of employers, connected with, or by any other employer engaged in the industry in which the contractor is engaged.

iii) No party shall be entitled to be represented by a legal practitioner in any investigation or enquiry under these Regulations.

18. INSPECTION OF BOOKS AND OTHER DOCUMENTS:

The contractor shall allow Inspection of the registers and other documents prescribed under these regulations by inspecting officers and the Engineer-in-charge or his authorized representative at any time and by the worker or his agent on receipt of due notice at convenient time.

19. INTERPRETATION ETC:

On any question as to the application, interpretation or effect of these Regulations, the decision of the Chief Labour Commissioner or Deputy Chief Labour Commissioner (Central) shall be final and binding.

20. AMENDMENTS:

Central Government may, some time to time, add to or amend the Contractors Labour Regulations and issue such directions as it may consider necessary for the proper implementation of the Contractors Labour Regulations for the purpose of removing any difficulty which may arise in the administration thereof, based on which the BHEL Contractors Labour Regulation here in contained shall be subject to revision.

BHEL SAFETY CODE (See condition 20)

i) Suitable scaffolds shall be provided for workmen for all work that cannot safely be done from the ground, or from solid construction except such short period work as can be done safely from ladders. When a ladder is used one extra mazdoor shall be engaged for holding the ladder and if the ladder is used for carrying materials as well, suitable footholds and handholds shall be provided on the ladder and the ladder shall be given an inclination not steeper than ¼ to 1 (1/4 horizontal and 1 vertical).

ii) Scaffolding or staging more than 3.25 meters above the ground or floor, swing or suspended from an overhead support or erected with stationery support, shall have a guard rail properly attached, bolted, braced and otherwise secured at least 1 meter high above the floor or platform of such scaffolding or staging and extending along with the entire length of the outside and ends thereof with only such openings as may be necessary for the delivery or materials, such scaffolding or staging shall be so fastened as to prevent it from swaying from the building or structure.

iii) Working platform, gangways and stairways shall be so constructed that they do not sag unduly or unequally, and if height of a platform or gangway or stairway is more than 3.25 meters above ground level it shall be closely boarded, have adequate width and be suitably fenced, as described in 2 above.

iv) Every opening in floor of a building or in a working platform shall be provided with suitable means to prevent fall of persons or materials by providing suitable fencing or failing with a minimum height of 1 meter.

v) Safe means of access shall be provided to all working platform and other working places, every ladder shall be securely fixed. No portable single ladder shall be over 9 meters in length. Width between side rails in a rung ladder shall in no case be less than 30cm. For ladders up to and including 3 meters in length. Uniform step spacing shall not exceed 30 cm.

Adequate precautions shall be taken to prevent danger from electrical equipment. No materials on any of the sites shall be so stacked or placed as to cause danger or inconvenience to any person or the public. The contractor shall provide all necessary fencing and lights to protect public from accidents and shall be bound to bear expenses of defense of every suit action or other proceedings at law that may be brought by any person for injury sustaining owing to every suit action or other proceedings at law that may be brought by any person for injury sustaining owing to neglect of the above precautions, and pay any damages and costs which may be awarded in any such suit, action or proceedings to any such person or which may with the consent of the contractor be paid to compromise any claim by any such person**.**

6. EXCAVATION AND TRENCHING:

R.Palanikumar,
Dy. Mgr-Civil,BHEL-EDN

CONTACTOR (SIGN & SEAL)

All trenches, 1.5 meters or more in depth, shall at all times be supplied with at least one ladder for each 30 m length or fraction thereof. Ladder shall to be extended from bottom of trench to at least, 1 meter above surface of the ground. Sides of a trench 1.5 meters or more in depth shall be stepped back to give suitable slope, or securely held by timber bracing, so as to avoid the danger of sides collapsing. Excavated materials shall not be placed within 1.5 meters of the edge of trench or half the depth of trench, whichever is more. Cutting shall be done from top to bottom. Under no circumstances shall undermining or undercutting be done.

7. DEMOLITION:

Before any demolition work is commenced and also during the process of the work.

a) All roads and open areas adjacent to the work site shall either be enclosed or suitably protected;

b) No electric cable or apparatus which is liable to be source of danger over a cable or apparatus used by operator shall remain electrically charged.

c) All present steps shall be taken to prevent danger to persons employed, from risk or fire or explosion or No floor, roof or other part of a building shall be so overloaded with debris or materials as to render it unsafe.

8. All necessary personal safety equipment as considered adequate by the Engineer-in-charge shall be available for use of persons employed on the site and maintained in a condition suitable for immediate use and the contractor shall take adequate steps to ensure proper use of equipment by those concerned.

a) Workers employed on mixing asphaltic materials cement and lime mortars/concrete shall be provided with protective footwear and protective goggles.

b) Those engaged in handling any materials which is injurious to the eye shall be provided with protective goggles.

c) Those engaged in welding works shall be provided with welder's protective eye shields.

d) Store breaker shall be provided with protective goggles and protective clothing and seated at sufficiently safe intervals.

e) When workers are employed in sewer and manholes which are in use, the contractor shall ensure that manholes covers are opened and manholes are ventilated at least for an hour before workers are allowed to get in to them. Manholes so opened shall be cordoned off with suitable railing and provided with warning signals or boards to prevent accident to public.

f) The contractor shall not employ men below the age of 18 and women on the work of painting with products containing lead in any form. Wherever men above the age of 18 or employed on the work of lead painting the following precautions shall be taken.

i) No paint containing lead or lead products shall be used except in the form of paste or readymade paint.

ii) Suitable face masks shall be supplied by the contractor for use by workers when paint is applied in the form of spray or a surface having lead paint is dry rubbed and scrapped.

iii) Overalls shall be supplied by the Contractor to workmen and adequate facilities shall be provided to enable working painters to wash during and cessation of work.

9. When work is done near any where there is risk of drowning, all necessary equipment shall be provided and kept ready for use and all necessary steps taken for prompt rescue of any person in danger and adequate provision made for prompt first aid treatment of all injuries likely to be sustained during the course of the work.

10. Use of hoisting machine and tackles including their attachments, encourage and supports shall conform to the following:

a) i) These shall be of good mechanical construction, sound material an adequate strength and free from defects and adequate strength, and free from defects.

ii) Every rope used in hoisting or lowering materials or as a means of suspension shall be durable quality and adequate strength, and free from defects.

R.Palanikumar,
Dy. Mgr-Civil,BHEL-EDN

CONTACTOR (SIGN & SEAL)

b) Every crane driver or hoisting appliance operator shall be properly qualified and no person under the age of 21 years shall be in-charge of any hoisting machine including any scaffolding winch or give signals to operator.

c) In case of every hoisting machine and of every chain, ring, hook, shackle, swivel and pulley block used in hoisting, or lowering or as means of suspension safe working load shall be ascertained by adequate means. Every hoisting machine and all gear referred to above shall have the safe working load plainly marked thereon. In case of a hoisting machine having a variable safe working load, each safe working load, and the conditions under which it is applicable shall be clearly indicated. No part of any machine or any gear referred to above in this paragraph shall be loaded beyond the safe working load except for the purpose of testing.

d) In case of departmental machine, safe working load shall be notified by the Engineer-in-charge. As regards contractors machines the contractor shall notify safe working load of each machine to the Engineer-in-charge wherever he brings it to site of work and get it verified by the Engineer-in-charge.

11. Motors gearing, transmission, electric wiring and other dangerous parts of hoisting appliances shall be provided with efficient safeguards, hoisting appliances shall be provided with such means as will reduce to the minimum risk of accidental descent of load. Adequate precautions shall be taken to reduce to the minimum risk of any part of a suspended load becoming accidentally displaced. When workers are employed on electrical installations which are already energised, insulating mats, working apparel such as gloves, sleeves, and boots, as may be necessary shall be provided. Workers shall not wear any rings; watches carry keys or other materials which are good conductors of electrically.

12. All scaffolding, ladders and other safety devices mentioned or described herein shall be maintained in a safe condition and no scaffold, ladder or equipment shall be altered or removed while it is in use. Adequate washing facilities shall be provided at or near the places of work.

13. These safety provisions shall be brought to the notice of all concerned by display on a notice board at a prominent place at the work spot. Persons responsible for ensuring compliance with the safety code shall be named there on by the contractor.

14. To ensure effective enforcement of the rules and regulations relating to safety precautions, arrangements made by the contractor shall be open to inspection by the Engineer-in-charge or his representative and the inspection officers as defined in the contractor's Labour Regulations.

15. Notwithstanding the above conditions 1 to 14, the Contractor is not exempted from the operation of any other Act or Rule in force.

FORM OF REGISTER OF WORKMEN

R.Palanikumar,
Dy. Mgr-Civil,BHEL-EDN

CONTACTOR (SIGN & SEAL)

(Regulation 7)

(i) Name and address of the contractor:…….
(ii) Number and date of the contract agreement/work order:…….
(iii) Name and address of the department awarding the contract:……
(iv) Nature of the contract and location of the work:……
(v) Duration of the contract:……..

Sl. No.	Name and Surname of the workers.	Age & Sex	Father/Husband's Name	Nature of employment & designation	Permanent home address of employee (Village, Dist., Thana)	Present address	Date of commencement of employment	Date of termination or leaving of employment	Signature or Thumb impression of the employee	Remarks
1	2	3	4	5	6	7	8	9	10	11

FORM OF EMPLOYMENT CARD
(Regulation 8)

(i) Name and sex of the worker:……

R.Palanikumar,
Dy. Mgr-Civil,BHEL-EDN

CONTACTOR (SIGN & SEAL)

(ii) Father's/Husband's Name:……
(iii) Address:……
(iv) Age or date of birth:…….
(v) Identification marks:……

Particulars of next of kin (wife/husband and children, if any, or/dependent next of kin in case of the worker has no wife/husband or child):

Name:…….
Full address of dependents:……
(Specify village, Dist., and State):……

Sl. No.	Name and address of Employer (specify whether a contractor or a sub- contractor).	Particulars of location of work site and description of work done	Total period for which the worker is employed (From : To:)	Actual Number of days worked	Leave taken (No. of days should be specified)	Nature of work done by the worker	Wage rate with particulars office of unit in case piece	Total wages earned by the worker during the period shown under Col.5	Remarks	Signature of the employer
1	2	3	4	5	6	7	8	9	10	11

N.B: For the worker employed at one time one piece-work basis and at another on daily wages, relevant entries in respect of each type of employment should be made separately.

R.Palanikumar,
Dy. Mgr-Civil,BHEL-EDN

CONTACTOR (SIGN & SEAL)

FORM OF WAGE SLIP
(REGULATION 9)

(i) Name of the contractor…….

(ii) Place…….

---

1. Name of the workers with father's/husband's Name :

2. Nature of employment :

3. Wage period :

4. Rate of wages payable :

5. Total attendance/unit of Work done :

6. Dates on which overtime worked. :

7. Overtime wages. :

8. Gross Wages, payable :

9. Total deductions (indicating nature of deduction).

10. Net Wages Payable :

CONTRACTOR'S SIGNATURE/
THUMB IMPRESSION.

EMPLOYEES SIGNATURE/
THUMB IMPRESSION.

R.Palanikumar,
Dy. Mgr-Civil,BHEL-EDN

CONTACTOR (SIGN & SEAL)

FORM OF REGISTER OF WAGES-CUM-MUSTER ROLL
(Regulation 9)

(vi) Name and address of the contractor:…….
(vii) No. & Date of the contract agreement/work order:……..
(viii) Name and address of the dept. awarding the contract:…….
(ix) Nature of the contract and location of the work:…….
(x) Duration of the contract:…….
(xi) Wage period:…….

							Fair wages payable.		Wages paid.		Overtime worked.				Deduction from wages.								
Serial Number	No. and Surname of the worker.	Father's/husband's Name	Sex	Designation nature of work.	Daily attendance (No. of units worked).	Total attendance units.	Basic	D.A and other allowances	Basic	D.A.and other allowances	Date	No. of hours.	Over time wages earned.	Total wages paid	Fine	Deduction for damage or loss	House rent.	Revenue of advances.	Other deductions	Net wages payable.	Date of payment	Signature or thumb impression of the worker.	Remarks.
1	2	3	4	5	6	7	8	9	10	11	12	13	14	15	16	17	18	19	20	21	22	23	24

R.Palanikumar,
Dy. Mgr-Civil,BHEL-EDN

CONTACTOR (SIGN & SEAL)

FORM OF REGISTER OF
DEDUCTIONS FOR DAMAGE OR LOSS CAUSED TO THE BHEL BY
THE NEGLECT OR DEFAULT OF THE EMPLOYED PERSONS.
(Regulation No. 10 (vii).

Sl.No.	Name	Father's/ Husband's Name.	Sex	Dept.	Damage or loss caused with date	Whether worker showed cause against deduction if so, enter date.	Date and amount of deduction imposed.	Number of in statement if any	Date on which total amount realised	Remarks.
1	2	3	4	5	6	7	8	9	10	11

R.Palanikumar,
Dy. Mgr-Civil,BHEL-EDN

CONTACTOR (SIGN & SEAL)

FORM OF REGISTER OF FINES (REGULATIONS No. 10 (VII)

Sl.No.	Name	Father's/ Husband's Name.	Sex.	Dept.	Nature and date of the offence for which fine imposed	Whether workman showed cause against fine or not, enter date.	Date of wages.	Date and amount of fine imposed.	Date on which fine released.	Remarks.
1	2	3	4	5	6	7	8	9	10	11

R.Palanikumar,
Dy. Mgr-Civil,BHEL-EDN

CONTACTOR (SIGN & SEAL)

PRICE BID FOR MMS PILLING , STRUCTURAL ERECTION & LAND LEVELLING WORKS OF 75 MWp(AC) SOLAR POWER PLANT FOR GIPCL AT CHARANKA, GUJARAT					
S.NO	**DESCRIPTION**	**UNIT**	**QTY**	**RATE**	**AMOUNT**
1	Boring with DTH/drilling machine in any kind of soil/rock, providing and installing bored cast-in-situ reinforced cement concrete piles of grade M-25 of specified diameter and length below the pile cap, to carry a safe working load not less than specified, excluding the cost of steel reinforcement but including the cost of boring, with bentonite solution and temporary casing of appropriate length for setting out and removal of same and the length of the pile to be embedded in the pile cap etc. all complete, including removal of excavated earth with all lifts and leads & pile marking (Length of pile for payment shall be measured upto bottom of pile cap). 300mm dia pile	RM	77123.00	809.00	**62,392,507.00**
2	Centering and shuttering including strutting, propping etc. and removal of form for Foundations, footings, bases of columns, etc. for mass concrete	Sqm	9687.00	97.00	**939,639.00**
3	Providing and laying in position machine batched and machine mixed design mix M-25 grade cement concrete for reinforced cement concrete work, using cement content as per approved design mix, including pumping of concrete to site of laying but excluding the cost of centering, shuttering, finishing and reinforcement, including admixtures in recommended proportions as per IS: 9103 to accelerate, retard setting of concrete, improve workability without impairing strength and durability as per direction of Engineer-in-charge All works upto plinth level for collar of MMS of Apprx 150mm Ht	Cum	726.00	3069.00	**2,228,094.00**
4	Erection of Columns Erection and Alignment of structure legs (Columns) in plumb, as per the Co-ordinates of BHEL MMS coordinate drawing, inside pile foundation before pouring of concrete complete in all respect including template etc,collecting of columns material from store,shifting to work location,unpacking, disposal of unwanted packing material at identified location complete all. (SUPPLY OF COLUMN MATERIAL IS IN BHEL SCOPE)	Tonnes	900.00	10062.00	**9,055,800.00**
5	Erection of Structure material using required fasteners as per BHEL GA-Drawing.Assembly to mentioned inclinated angle ,tightening of accessories using tools at mentioned torque including collecting structure material from store,shifting to work location,unpacking, disposal of unwanted packing material at identified location complete all.(weight of erection bolts, nuts not payable) (SUPPLY OF STRUCTURE MATERIAL AND HARDWARE IS IN BHEL SCOPE)	Tonnes	3000.00	2415.20	**7,245,600.00**
6	Erection of modules,placing,tightening using tools at mentioned torque..(size approximately 1966 x 986 x 35 mm, App. Weight: 25 kg). including Erection bolts & nuts of grade SS316 as per drawing and collecting module from BHEL STORE unpacking,shifting to work location lead upto 2 KM, disposal of unwanted packing material at identified location (BHEL WILL SUPPLY PV MODULES & FASTENERS) complete all.	Nos	293800.00	22.70	**6,669,260.00**
7	Earth work in excavation by mechanical means (Hydraulic excavator) / manual means over areas (any depth. 1.5m in width as well as 10 sqm on plan) including disposal of excavated earth, lead upto 2 km within plant premises and lift upto 1.5m, disposed earth to be levelled, rolled/neatly dressed as per direction of Engineer-in -charge.all kind of soil	cum	298253.00	91.20	**27,200,673.60**
8	Earth work in excavation by mechanical means (Hydraulic excavator) / manual means over areas (any depth. 1.5m in width as well as 10 sqm on plan) including disposal of excavated earth, lead upto 2km within plant premises and lift upto 1.5m, disposed earth to be levelled and neatly dressed.Ordinary rock	cum	1000.00	143.30	**143,300.00**

R.Palanikumar
Dy. Manager-Civil,BHEL-EDN

9	Filling available excavated earth in trenches, plinth side of foundations etc. in layers not exceeding 20cm in depth consolidating each deposited layer by ramming and watering lead upto 2km or within plant premisses which one is higher and lift upto 1.5m	Cum	59651.00	110.66	**6,600,979.66**
10	Disposal of excavated earth by Mechanical Transport including loading ,unloading and stacking earth more than 2 km complete all as per direction of Engineer-in -charge (outside the plant premises at the location shown by GPCL)	Cum	6357.00	89.00	**565,773.00**
11	Disposal of excavated rock by Mechanical Transport including loading ,unloading and stacking earth more than 2 km (outside the plant premises at the location shown by GPCL) complete all as per direction of Engineer-in -charge	Cum	1000.00	156.98	**156,983.20**
12	Finishing pile cap with water proofing cement paint of required shade :New work (Two or more coats applied @ 3.84 kg/10 sqm).	sqm	9687.00	33.80	**327,420.60**
13	Demolishing cement concrete manually/ by mechanical means including disposal of material within 2km/away from plant premises lead as per direction of Engineer - in- charge. Nominal concrete 1:3:6 or richer mix (i/c equivalent design mix)	Cum	100.00	722.00	**72,200.00**
14	Demolishing brick work /rrm manually/ by mechanical means including stacking of serviceable material and disposal of unserviceable material within 2km/away from plant premises lead as per direction of Engineer-in-charge.	Cum	500.00	610.00	**305,000.00**
15	Demolishing R.C.C. work manually/ by mechanical means including stacking of steel bars and disposal of unserviceable material within 2km/away from plant premises lead as per direction of Engineer - in- charge.	Cum	100.00	1053.00	**105,300.00**
16	Extra for cutting reinforcement bars manually/ by mechanical means in R.C.C. or R.B. work (Payment shall be made on the cross sectional area of R.C.C. or R.B. work) as per direction of Engineer -in -charge.	Sqm	100.00	364.10	**36,410.00**
17	Vertical load testing(initial) of piles in accordance with IS 2911(part-4) including installation of loading platform and preparation of pile head or construction of test cap and dismantling of test cap after test etc. complete as per specification and upto 50 tonne capacity pile. all complete as per the direction of engineer in charge	Nos	10.00	5000.00	**50,000.00**
18	Pull out load testing (initial) of piles in accordance with IS 2911(part-4) including installation of loading platform and preparation of pile head or construction of test cap and dismantling of test cap after test etc. complete as per specification and upto 50 tonne capacity pile. all complete as per the direction of engineer in charge	Nos	10.00	5000.00	**50,000.00**
19	Lateral load testing(initial) of single pile in accordance with IS:2911 (Part-4) for determining safe allowable lateral load on pile upto 50 tonne capacity as per direction of engineer in charge	Nos	3.00	5000.00	**15,000.00**
20	Vertical load testing of piles in accordance with IS 2911(part-4) including installation of loading platform and preparation of pile head or construction of test cap and dismantling of test cap after test etc.Routine test (test load 1.5 times the safe capacity) complete as per the direction of engineer in charge	Nos	825.00	305.00	**251,625.00**
21	Uplift testing of piles in accordance with IS 2911(part-4) including installation of loading platform and preparation of pile head or construction of test cap and dismantling of test cap after test etc. Routine test (test load 1.5 times the safe capacity) complete as per the direction of engineer in charge	Nos	825.00	305.00	**251,625.00**
22	Lateral load testing of single pile in accordance with IS:2911 (Part-4) for determining safe allowable lateral load on pile.Routine test (as per design load) complete as per the direction of engineer in charge	Nos	825.00	305.00	**251,625.00**
A	**Total Value of work Excluding GST**				**Rs. 124,914,816.00**

CONTRACTOR SHOULD QUOTE PERCENTAGE (%) ABOVE/BELOW (+/-) (OR) AT PAR TO TOTAL AMOUNT (A) ……

QUOTED PERCENTAGE (%) IN WORDS ABOVE/BELOW (OR) AT PAR TO TOTAL AMOUNT (A) …….

***** QUOTED PERCENTAGE (%) IS APPLICABLE ON ALL THE RATES OF ITEMS UNIFORMLY.**

R.Palanikumar
Dy. Manager-Civil,BHEL-EDN

INTEGRITY PACT

Between

Bharat Heavy Electricals Ltd. (BHEL), a company registered under the Companies Act 1956 and having its registered office at "BHEL House", Siri Fort, New Delhi – 110049 (India) hereinafter referred to as "The Principal", which expression unless repugnant to the context or meaning hereof shall include its successors or assigns of the ONE PART

and

_____, (description of the party along with address), hereinafter referred to as "The Bidder/ Contractor" which expression unless repugnant to the context or meaning hereof shall include its successors or assigns of the OTHER PART

Preamble

The Principal intends to award, under laid-down organizational procedures, contract/s for _____

_____

_____. The Principal values full compliance with all relevant laws of the land, rules and regulations, and the principles of economic use of resources, and of fairness and transparency in its relations with its Bidder(s)/ Contractor(s).

In order to achieve these goals, the Principal will appoint Independent External Monitor(s), who will monitor the tender process and the execution of the contract for compliance with the principles mentioned above.

Section 1 – Commitments of the Principal

1.1 The Principal commits itself to take all measures necessary to prevent corruption and to observe the following principles:-

1.1.1 No employee of the Principal, personally or through family members, will in connection with the tender for, or the execution of a contract, demand, take a promise for or accept, for self or third person, any material or immaterial benefit which the person is not legally entitled to.

1.1.2 The Principal will, during the tender process treat all Bidder(s) with equity and reason. The Principal will in particular, before and during the tender process, provide to all Bidder(s) the same information and will not provide to any Bidder(s) confidential / additional information through which the Bidder(s) could obtain an advantage in relation to the tender process or the contract execution.

1.1.3 The Principal will exclude from the process all known prejudiced persons.

1.2 If the Principal obtains information on the conduct of any of its employees which is a penal offence under the Indian Penal Code 1860 and Prevention of Corruption Act 1988 or any other statutory penal enactment, or if there be a substantive suspicion in this regard, the Principal will inform its Vigilance Office and in addition can initiate disciplinary actions.

Section 2 – Commitments of the Bidder(s)/ Contractor(s)

2.1 The Bidder(s)/ Contractor(s) commit himself to take all measures necessary to prevent corruption. He commits himself to observe the following principles during his participation in the tender process and during the contract execution.

2.1.1 The Bidder(s)/ Contractor(s) will not, directly or through any other person or firm, offer, promise or give to the Principal or to any of the Principal's employees involved in the tender process or the execution of the contract or to any third person any material, immaterial or any other benefit which he / she is not legally entitled to, in

order to obtain in exchange any advantage of any kind whatsoever during the tender process or during the execution of the contract.

2.1.2 The Bidder(s)/ Contractor(s) will not enter with other Bidder(s) into any illegal or undisclosed agreement or understanding, whether formal or informal. This applies in particular to prices, specifications, certifications, subsidiary contracts, submission or non-submission of bids or any other actions to restrict competitiveness or to introduce cartelization in the bidding process.

2.1.3 The Bidder(s)/ Contractor(s) will not commit any penal offence under the relevant IPC/ PC Act; further the Bidder(s)/ Contractor(s) will not use improperly, for purposes of competition or personal gain, or pass on to others, any information or document provided by the Principal as part of the business relationship, regarding plans, technical proposals and business details, including information contained or transmitted electronically.

2.1.4 The Bidder(s)/ Contractor(s) will, when presenting his bid, disclose any and all payments he has made, and is committed to or intends to make to agents, brokers or any other intermediaries in connection with the award of the contract.

2.2 The Bidder(s)/ Contractor(s) will not instigate third persons to commit offences outlined above or be an accessory to such offences.

Section 3 – Disqualification from tender process and exclusion from future contracts

If the Bidder(s)/ Contractor(s), before award or during execution has committed a transgression through a violation of Section 2 above, or acts in any other manner such as to put his reliability or credibility in question, the Principal is entitled to disqualify the Bidders(s)/ Contractor(s) from the tender process or take action as per the separate “Guidelines for Suspension of Business Dealings with Suppliers/ Contractors” framed by the Principal.

Section 4 – Compensation for Damages

4.1 If the Principal has disqualified the Bidder(s) from the tender process prior to the award according to Section 3, the Principal is entitled to demand and recover the damages equivalent to Earnest Money Deposit/ Bid Security.

4.2 If the Principal has terminated the contract according to Section 3, or if the Principal is entitled to terminate the contract according to section 3, the Principal shall be entitled to demand and recover from the Contractor liquidated damages equivalent to 5% of the contract value or the amount equivalent to Security Deposit/Performance Bank Guarantee, whichever is higher.

Section 5 – Previous Transgression

5.1 The Bidder declares that no previous transgressions occurred in the last 3 years with any other company in any country conforming to the anti-corruption approach or with any other Public Sector Enterprise in India that could justify his exclusion from the tender process.

5.2 If the Bidder makes incorrect statement on this subject, he can be disqualified from the tender process or the contract, if already awarded, can be terminated for such reason.

Section 6 – Equal treatment of all Bidders/ Contractors/ Sub-contractors

6.1 The Bidder(s)/ Contractor(s) undertake(s) to demand from his sub-contractors a commitment consistent with this Integrity Pact. This commitment shall be taken only from those sub-contractors whose contract value is more than 20% of Bidder's/ Contractor's contract value with the Principal.

6.2 The Principal will enter into agreements with identical conditions as this one with all Bidders and Contractors.

6.3 The Principal will disqualify from the tender process all bidders who do not sign this pact or violate its provisions.

Section 7 – Criminal Charges against violating Bidders/ Contractors /Sub-contractors

If the Principal obtains knowledge of conduct of a Bidder, Contractor or Subcontractor, or of an employee or a representative or an associate of a Bidder, Contractor or Subcontractor which constitutes corruption, or if the Principal has substantive suspicion in this regard, the Principal will inform the Vigilance Office.

Section 8 –Independent External Monitor(s)

8.1 The Principal appoints competent and credible Independent External Monitor for this Pact. The task of the Monitor is to review independently and objectively, whether and to what extent the parties comply with the obligations under this agreement.

8.2 The Monitor is not subject to instructions by the representatives of the parties and performs his functions neutrally and independently. He reports to the CMD, BHEL.

8.3 The Bidder(s)/ Contractor(s) accepts that the Monitor has the right to access without restriction to all contract documentation of the Principal including that provided by the Bidder(s)/ Contractor(s). The Bidder(s)/ Contractor(s) will grant the monitor, upon his request and demonstration of a valid interest, unrestricted and unconditional access to his contract documentation. The same is applicable to Sub-contractor(s). The Monitor is under contractual obligation to treat the information and documents of the Bidder(s)/ Contractor(s) / Sub-contractor(s) with confidentiality.

8.4 The Principal will provide to the Monitor sufficient information about all meetings among the parties related to the contract provided such meetings could have an impact on the contractual relations between the Principal and the Contractor. The parties offer to the Monitor the option to participate in such meetings.

8.5 As soon as the Monitor notices, or believes to notice, a violation of this agreement, he will so inform the Management of the Principal and request the Management to discontinue or

take corrective action, or heal the situation, or to take other relevant action. The Monitor can in this regard submit non-binding recommendations. Beyond this, the Monitor has no right to demand from the parties that they act in a specific manner, refrain from action or tolerate action.

8.6 The Monitor will submit a written report to the CMD, BHEL within 8 to 10 weeks from the date of reference or intimation to him by the Principal and, should the occasion arise, submit proposals for correcting problematic situations.

8.7 The CMD, BHEL shall decide the compensation to be paid to the Monitor and its terms and conditions.

8.8 If the Monitor has reported to the CMD, BHEL, a substantiated suspicion of an offence under relevant IPC / PC Act, and the CMD, BHEL has not, within reasonable time, taken visible action to proceed against such offence or reported it to the Vigilance Office, the Monitor may also transmit this information directly to the Central Vigilance Commissioner, Government of India.

8.9 The number of Independent External Monitor(s) shall be decided by the CMD, BHEL.

8.10 The word 'Monitor' would include both singular and plural.

Section 9 – Pact Duration

9.1 This Pact begins when both parties have legally signed it. It expires for the Contractor 12 months after the last payment under the respective contract and for all other Bidders 6 months after the contract has been awarded.

9.2 If any claim is made / lodged during this time, the same shall be binding and continue to be valid despite the lapse of this pact as specified as above, unless it is discharged/ determined by the CMD, BHEL.

Section 10 – Other Provisions

10.1 This agreement is subject to Indian Laws and jurisdiction shall be registered office of the Principal, i.e. New Delhi.

10.2 Changes and supplements as well as termination notices need to be made in writing. Side agreements have not been made.

10.3 If the Contractor is a partnership or a consortium, this agreement must be signed by all partners or consortium members.

10.4 Should one or several provisions of this agreement turn out to be invalid, the remainder of this agreement remains valid. In this case, the parties will strive to come to an agreement to their original intentions.

10.5 Only those bidders/ contractors who have entered into this agreement with the Principal would be competent to participate in the bidding. In other words, entering into this agreement would be a preliminary qualification.

---	---
For & On behalf of the Principal	For & On behalf of the Bidder/ Contractor
(Office Seal)	(Office Seal)

Place----------

Date----------

Witness: _____	Witness: _____
(Name & Address) _____	(Name & Address)_____
_____	_____

COPYRIGHT AND CONFIDENTIAL
THE INFORMATION ON THIS DOCUMENT IS THE PROPERTY OF BHARAT HEAVY ELECTRICALS LTD. IT MUST NOT BE USED DIRECTLY OR INDIRECTLY IN ANY WAY DETRIMENTAL TO THE INTEREST OF THE COMPANY.

DRG. No. 3 679 05 00923

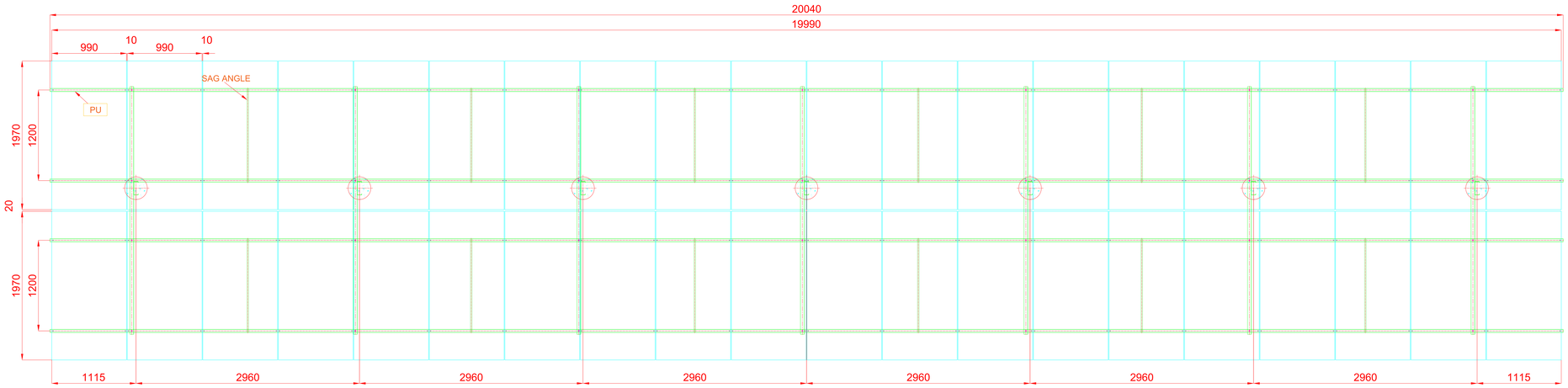

PLAN OF STRUCTURE (WITH SOLAR MODULE) FOR 0°

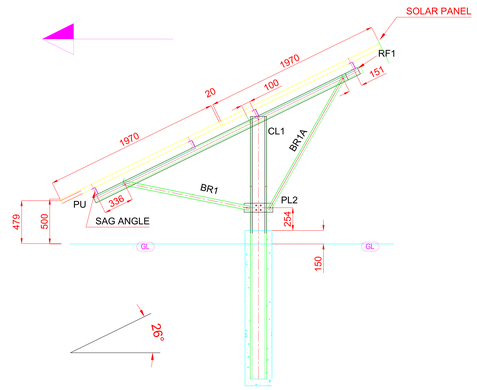

SIDE VIEW FOR 26°(FIXED TILT)MADE LOOKING FROM

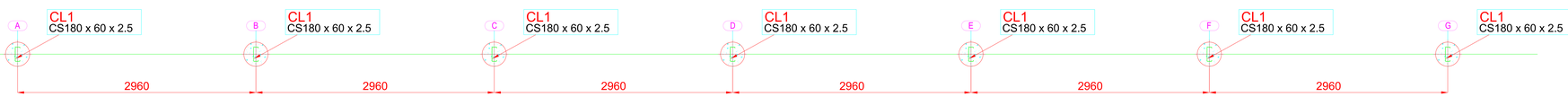

FOUNDATION DETAILS

FOR TENDER PURPOSE ONLY.

NOTES:(This note has to be read alongwith the Bill of material).

1. DIMENSIONS FOR COLD ROLLED STEEL ANGLE/CHANNEL SECTIONS SHALL BE IN ACCORDANCE WITH IS:811:1987.
2. DIMENSIONS OF PLATES, FLAT BARS SHALL CONFORM TO IS:1730.
3. FABRICATION AND ERECTION SHALL BE CARRIED OUT INACCORDANCE WITH IS:800 AND IS:801.
4. ALL MMS MEMBERS TO BE HOT DIP GALVANISATED IN ACCORDANCE WITH IS:2629-1985 AND IS 4759 . HOWEVER THE MINIMUM GALVANIZATION THICKNESS TO BE AS PER BOM.
5. GENERAL ASSEMBLY TOLERANCE LINEAR +/- 2MM.
6. GENERAL ASSEMBLY TOLERANCE ANGULAR +/- 1°.
7. HOLE SIZES ARE SHOWN AFTER GALVANIZATION/TREATMENT.
8. REMOVE ALL SHARP AND BURR EDGES.
9. MMS EARTHING ARRANGEMENT TO BE SHOWN IN RELEVANT DRAWING.
10. PROTOTYPE TO BE DONE AS PER CLAUSE MENTIONED IN PURCHASE SPEC NO PS-439-1189.

GENERAL NOTES
1. ALL DIMENSIONS ARE IN MILLIMETERS UNLESS OTHERWISE SPECIFIED.
2. DO NOT SCALE THE DRAWING ONLY WRITTEN DIMENSIONS TO BE READ.

PROJECT : 75MWp SOLAR POWER PROJECT
CUSTOMER : GIPCL

REV.	DATE	ALTERED / CHECKED / APPROVED	REV.	DATE	ALTERED / CHECKED / APPROVED

	NAME	SIGN	DATE
DRAWN	SAN		180418
CHECKED	PM		180418
APPROVED	MS		180418

DISTRIBUTION OF PRINTS

DEPT.	CODE
SC&PV	439

BHARAT HEAVY ELECTRICALS LIMITED.
ELECTRONICS DIVISION, BANGALORE

TITLE: GA OF MODULE MOUNTING STRUCTURE

No. OF SHEETS	02
SHEET No.	01
REV	00

BHEL DRG. No. 3 679 05 00923

REF. DRG. No.
SIGN. & DATE
INVENTORY No.