भारत हेवी इलेक्ट्रिकल्स लिमिटेड
(भारत सरकार का उपक्रम)
BHARAT HEAVY ELECTRICALS LIMITED
(A Govt. of India Undertaking)

Ref: PSER:SCT:NKP-M2050:7968 Date: 11-06-2020

NOTICE INVITING TENDER

NOTE: INTENDING BIDDER TO PARTICIPATE MAY DOWNLOAD FROM WEB SITES

Sealed offers in two part bid system are invited from reputed & experienced bidders meeting PRE QUALIFICATION CRITERIA as mentioned in Annexure-1 through E-Procurement Portal https://bhel.abcprocure.com only, for the subject job by the undersigned on the behalf of BHARAT HEAVY ELECTRICALS LIMITED as per the tender document. Issue/ forwarding intimation regarding tender to any bidder shall not construe that the bidder is considered to be qualified. Consideration of their offer is subject to CUSTOMER APPROVAL & compliance of loading criteria as per clause no. 8.0 of NIT etc. specified below. Following points relevant to the tender may please be noted and complied with.

1.0 Salient Features of NIT

SL NO	ISSUE	DESCRIPTION	
i	TENDER NUMBER	PSER:SCT:NKP-M2050:20	
ii	Broad Scope of job	*ERECTION, TESTING, COMMISSIONING, TRIAL OPERATION AND HANDING OVER OF TOTAL FLUE GAS DESULPHURIZATION SYSTEM (FGD) OF 3 X 660 MW NORTH KARANPURA STPP, JHARKHAND.*	
iii	DETAILS OF TENDER DOCUMENT		
a	Volume-IA	*General conditions of contract (Supply)*	*Not Applicable.*
b	Volume-IB	*General conditions of contract (Service)*	***Applicable.***
c	Volume-IC	*Special conditions of contract (Supply)*	*Not Applicable.*
d	Volume-ID	*Special conditions of contract (Service)*	***Applicable.***
e	Volume-IE	*Forms and Procedures etc.*	***Applicable.***
f	Volume-IF	*Technical Conditions of Contract (TCC) (CML, TS)*	***Applicable.***
g	Volume-III	*Price Schedule (Absolute value) – Rev-00*	***Applicable.***
iv	ISSUE OF TENDER DOCUMENTS	*This is an E-tender floated online through our E-Procurement Site https://bhel.abcprocure.com. Start date of the tender: 11-06-2020*	***Applicable.***
v	DUE DATE & TIME OF OFFER SUBMISSION	*Date: 02-07-2020, Time: 15-00 Hrs. The bidder should respond by submitting their offer online in our e-Procurement platform at https://bhel.abcprocure.com only. Offers are invited in two-parts only. Hard copy bid or bids through email/fax shall not be accepted.*	*Applicable.*
vi	OPENING OF TENDER	*Date: 02-07-2020 1 hour after the latest due date and time of Offer submission Notes: (1) In case the due date of opening of tender becomes a non-working day, tenders shall be opened on next working day at the same time. (2) Bidder may depute representative to witness the*	*Applicable.*

		opening of tender.	
vii	EMD AMOUNT	*Rs. 77,36,000/-.*	*Applicable.*
viii	COST OF TENDER	*Rs. 10,000/-.*	*Applicable.*
ix	LAST DATE FOR SEEKING CLARIFICATION	*Date: 25-06-2020* *Along with soft version also, addressing to undersigned & to others as per contact address given below*	*Applicable.*
x	SCHEDULE OF Pre Bid Discussion (PBD)	--	*Not Applicable (In case BHEL decides to conduct PBD, date, time & venue of PBD will be intimated suitably thru TCN.)*
xi	INTEGRITY PACT & DETAILS OF INDEPENDENT EXTERNAL MONITOR (IEM)	*IEM DETAILS:* *Refer Clause No 34.0 below.*	*Applicable.*
xii	Latest updates	Latest updates on the important dates, Amendments, Correspondences, Corrigenda, Clarifications, Changes, Errata, Modifications, Revisions, etc to Tender Specifications will be hosted in BHEL webpage (www.bhel.com) ; CPP portal & E-Procurement Site https://bhel.abcprocure.com only. Bidders to keep themselves updated with all such information.	*Shall be intimated to bidder.*

2.0 The offer shall be submitted as per the instructions of tender document and as detailed in this NIT. Bidders to note specifically that all pages of tender document, including these NIT pages of this particular tender together with subsequent correspondences shall be submitted by them, duly digitally signed & stamped on each page, as part of offer. Rates/Price including discounts/rebates, if any, mentioned anywhere/ in any form in the techno-commercial offer other than the Price Bid, shall not be entertained.

3.0 Unless specifically stated otherwise, bidder shall remit cost of tender (non-refundable) and courier charges if applicable, in the form of Demand Draft drawn in favour of Bharat Heavy Electricals Ltd, payable at Kolkata, issuing the Tender, along with techno-commercial offer.

4.0 Unless specifically stated otherwise, bidder shall have to deposit EMD through Demand Draft/Pay Order in favour of Bharat Heavy Electricals Ltd, payable at Kolkata. For other details please refer General Conditions of Contract.
Bidders may please be noted that "OEMD" provision stands deleted. Hence, bidders who have deposited Rs. 2 Lakh as OEMD are also requested to submit fresh EMD as mentioned in sl no vii under clause no 1.0 of NIT.

5.0 Procedure for Submission of Tenders: The Tenderers must submit their Tenders as detailed below:

DOCUMENTS TO BE UPLOADED & MODALITY OF UPLOADING

Sl no	Description	Remarks
PART-I A	(TECHNO COMMERCIAL BID)	
	CONTAINING THE FOLLOWING:-	
i.	Covering letter/Offer forwarding letter of Tenderer. (**To be attached in relevant Attachment section**)	

ii.	Duly filled-in `No Deviation Certificate' as per prescribed format. (To be attached in relevant Attachment section) Note: a. In case of any deviation, the same should be submitted separately for technical & commercial parts, indicating respective clauses of tender against which deviation is taken by bidder. The list of such deviation shall be attached in relevant attachment section of the e –procurement portal. It shall be specifically noted that deviation recorded elsewhere shall not be entertained. b. BHEL reserves the right to accept/reject the deviations without assigning any reasons, and BHEL decision is final and binding. i). In case of acceptance of the deviations, appropriate loading shall be done by BHEL ii). In case of unacceptable deviations, BHEL reserves the right to reject the tender	
iii.	Supporting documents/ annexures / schedules/ drawing etc as required in line with Pre-Qualification criteria. It shall be specifically noted that all documents as per above shall be attached in relevant attachment section and credential certificates issued by clients shall distinctly bear the name of organization, contact ph no, FAX no, etc.	
iv.	All Amendments/Correspondences/Corrigenda/Clarifications/Changes/ Errata etc pertinent to this NIT. (To be attached in relevant Attachment section)	
v.	Integrity Pact Agreement (Duly signed by the authorized signatory)	Applicable.
vi.	Duly filled-in annexures, formats etc as required under this Tender Specification/NIT (To be attached in relevant Attachment section)	
vii.	Notice inviting Tender (NIT) (To be attached in relevant Attachment section)	
viii.	Volume – I F: Technical Conditions of Contract (TCC) (To be attached in relevant Attachment section)	
ix.	Volume – I D: Special Conditions of Contract (SCC)-Service (To be attached in relevant Attachment section)	
x.	Volume – I B : General Conditions of Contract (GCC)-Service (To be attached in relevant Attachment section)	
xii.	Volume – I E: Forms & Procedures etc. (To be attached in relevant Attachment section)	
xiii.	Volume–III - (UNPRICED – without disclosing rates/price, but mentioning only 'QUOTED' or 'UNQUOTED' against each item. (To be attached in Unpriced Bid Attachment section)	
xiv.	Any other details preferred by bidder with proper indexing. (To be attached in relevant Attachment section)	

PART-I B	EMD/ COST OF TENDER (To be submitted offline within due date of offer submission)	
	CONTAINING THE FOLLOWING:-	
i.	1. Earnest Money Deposit (EMD) in the form as indicated in this Tender	

	2. Cost of Tender (Demand Draft or copy of Cash Receipt as the case may be)	

PART-II	PRICE BID (TO BE ATTACHED IN PRICE BID ATTACHMENT SECTION)	
	CONTAINING THE FOLLOWING:-	
i	Covering letter/Offer forwarding letter of Tenderer enclosed in Part-I	
ii	Volume III – PRICE BID (Duly Filled in Schedule of Rates – rate/price to be entered in words as well as figures) Any other document uploaded in the price bid, apart from above tender format, shall not be taken into cognizance for evaluation of offer.	

SPECIAL NOTE:

A) Your offer & documents submitted along with offer shall be digitally signed & stamped in each page by your authorised representative. No overwriting/ correction in tender documents by bidders shall be allowed. However, if correction is unavoidable, the same may be signed by authorized signatory.
B) The credentials/ documents submitted towards compliance of Pre-qualification requirement shall be physically signed by the authorized signatory & stamped before uploading/submission with the offer in the e-procurement portal.
C) All documents/ annexures submitted with the offer shall be properly attached in the respective sections. BHEL shall not be responsible for any missing documents.

6.0 No Deviation with respect to tender clauses and no additional clauses/ suggestions/ in Techno-commercial bid/ Price bid shall normally be considered by BHEL. Bidders are requested to positively comply with the same.

7.0 BHEL reserves the right to accept or reject any or all Offers without assigning any reasons thereof. BHEL also reserves the right to cancel the Tender wholly or partly without assigning any reason thereof. Also BHEL shall not entertain any correspondence from bidders in this matter (except for the refund of EMD).

8.0 Assessment of Capacity of Bidders:

Bidder's capacity for executing the job under tender shall be assessed 'LOAD' wise and 'PERFORMANCE' wise as per the following:

I. LOAD: Load takes into consideration ALL the contracts of the Bidder under execution with BHEL Regions, irrespective of whether they are similar to the tendered scope or not. The cut off month for reckoning 'Load' shall be the 3rd Month preceding the month corresponding to the 'latest date of bid submission', in the following manner -
(Note: For example, if latest bid submission is in Jan 2017, then the 'load' shall be calculated up to and inclusive of Oct 2016)

Total number of Packages in hand = Load (P)

Where 'P' is the sum of all unit wise identified packages (refer table-1) under execution with BHEL Regions as on the cut off month defined above, including packages yet to be commenced, excepting packages which are on Long Hold.

II. PERFORMANCE: Here 'Monthly Performance' of the bidder for all the packages (under execution/ executed during the 'Period of Assessment' in all Power Sector Regions of BHEL) SIMILAR to the packages covered under the tendered scope, excepting packages not commenced shall be taken into consideration. The 'Period of Assessment' shall be 6 months preceding and including the cut off month. The cut off month for reckoning

'Period of Assessment' shall be the 3rd Month preceding the month corresponding to 'latest date of bid submission', in the following manner:

(Note: For example, if 'latest date of bid submission' is in Jan 2017, then the 'performance' shall be assessed for a 6 months' period up to and inclusive of Oct 2016 (i.e. from May 2016 to Oct 2016), for all the unit wise identified packages (refer Table I))

i). Calculation of Overall 'Performance Rating' for 'Similar Package/Packages' for the tendered scope under execution at Power Sector Regions for the 'Period of Assessment':

This shall be obtained by summing up the 'Monthly Performance Evaluation' scores obtained by the bidder in all Regions for all the similar Package/packages', divided by the total number of Package months for which evaluation should have been done, as per procedure below:

a) P_1, P_2, P_3, P_4, P_5 , …. P_N etc. be the packages (under execution/ executed during the 'Period of Assessment' in all Regions of BHEL) SIMILAR to the packages covered under the tendered scope, excepting packages not commenced. Total number of similar packages for all Regions = P_T (i.e. $P_T = P_1 + P_2 + P_3 + P_4 + \ldots P_N$)

b) Number of Months 'T_1' for which 'Monthly Performance Evaluation' as per relevant formats, should have been done in the 'Period of Assessment' for the corresponding similar package P_1. Similarly T_2 for package P_2,T_3 for package P_3, etc. for the tendered scope. Now calculate cumulative total months 'T_T' for total similar Packages 'P_T' for all Regions (i.e. $T_T = T_1 + T_2 + T_3 + T_4 + ..T_N$)

c) Sum 'S_1 'of 'Monthly Performance Evaluation' Scores (S_{1-1}, S_{1-2}, S_{1-3}, S_{1-4}, S_{1-5}…. S_{1-T1}) for similar package P_1, for the 'period of assessment' 'T_1' (i.e. $S_1 = S_{1-1} + S_{1-2} + S_{1-3} + S_{1-4} + S_{1-5} + \ldots S_{1-T1}$). Similarly, S_2 for package P_2 for period T_2, S_3 for package P_3 for period T_3 etc. for the tendered scope for all Regions. Now calculate cumulative sum 'S_T' of 'Monthly Performance Evaluation' Scores for total similar Packages 'P_T' for all Regions (i.e. 'S_T '$= S_1 + S_2 + S_3 + S_4 + S_5 + \ldots S_N$.)

d) Overall Performance Rating 'R_{BHEL}' for the Similar Package/Packages (under execution/ executed during the 'Period of Assessment') in all the Power Sector Regions of BHEL

$$= \frac{\text{Aggregate of Performance scores for all similar packages in all the Regions}}{\text{Aggregate of months for each of the similar packages for which performance should have been evaluated in all the Regions}}$$

$$= \frac{S_T}{T_T}$$

e) Bidders to note that the risk of non-evaluation or non-availability of the 'Monthly Performance Evaluation' reports as per relevant formats is to be borne by the Bidder.

f) Table showing methodology for calculating 'a', 'b' and 'c' above

Sl. No.	Item Description	Details for all Regions							Total
(i)	(ii)	(iii)	(iv)	(v)	(vi)	(vii)	(viii)	(ix)	(x)

Sl. No.	Item Description	Details for all Regions							Total
(i)	(ii)	(iii)	(iv)	(v)	(vi)	(vii)	(viii)	(ix)	(x)
1	Similar Packages for all Regions → (under execution/ executed during period of assessment)	P_1	P_2	P_3	P_4	P_5	…	P_N	Total No. of similar packages for all Regions = P_T i.e. Sum (Σ) of columns (iii) to (ix)
2	Number of Months for which 'Monthly Performance Evaluation' as per relevant formats should have been done in the 'period of assessment' for corresponding Similar Packages (as in row 1)	T_1	T_2	T_3	T_4	T_5	…	T_N	Sum (Σ) of columns (iii) to (ix) = T_T
3	Monthly performance scores for the corresponding period (as in Row 2)	S_{1-1}, S_{1-2}, S_{1-3}, S_{1-4}, … S_{1-T1}	S_{2-1}, S_{2-2}, S_{2-3}, S_{2-4}, … S_{2-T2}	S_{3-1}, S_{3-2}, S_{3-3}, S_{3-4}, … S_{3-T3}	S_{4-1}, S_{4-2}, S_{4-3}, S_{4-4}, … S_{4-T4}	S_{5-1}, S_{5-2}, S_{5-3}, S_{5-4}, … S_{5-T5}	.. … … … …	S_{N-1}, S_{N-2}, S_{N-3}, S_{N-4}, … S_{N-TN}	--------
4	Sum of Monthly Performance scores of the corresponding Package for the corresponding period (as in row-3)	S_1	S_2	S_3	S_4	S_5	…	S_N	Sum (Σ) of columns (iii) to (ix) = S_T

ii). Calculation of Overall 'Performance Rating' (R_{BHEL}) in case at least 6 evaluation scores for 'similar Package/Packages' for the tendered scope ARE NOT AVAILABLE, during the 'Period of Assessment':

This shall be obtained by summing up the 'Monthly Performance Evaluation' scores obtained by the bidder in all Regions for ALL the packages, divided by the total number of Package months for which evaluation should have been done. 'R_{BHEL}' shall be calculated subject to availability of 'performance scores' for at least 6 'package months' in the order of precedence below:

a) 'Period of Assessment' i.e. 6 months preceding and including the cut-off month
b) 12 months preceding and including the cut-off month
c) 24 months preceding and including the cut-off month

In case, R_{BHEL} cannot be calculated as above, then Bidder shall be treated as 'NEW VENDOR'. Further eligibility and qualification of this bidder shall be as per definition of 'NEW VENDOR' described in 'Explanatory Notes'.

iii). Factor "L" assigned based on Overall Performance Rating (R_{BHEL}) at Power Sector Regions:

Sl. no.	Overall Performance Rating (R_{BHEL})	Corresponding value of 'L'
1	=60	NA
2	> 60 and ≤ 65	0.4
3	> 65 and ≤ 70	0.35

4	> 70 and ≤ 75	0.25
5	> 75 and < 80	0.2
6	≥ 80	NA

III. 'Assessment of Capacity of Bidder':

'Assessment of Capacity of Bidder' is based on the Maximum number of packages for which a vendor is eligible, considering the performance scores of similar packages, as below:

Max number of packages P_{Max}= (R_{BHEL} - 60) divided by corresponding value of 'L', i.e. (R_{BHEL}- 60)/L

Note:

i). In case the value of P_{Max} results in a fraction, the value of P_{Max} is to be rounded off to next whole number

ii). For R_{BHEL} = 60, P_{Max} = '1'

iii). For R_{BHEL} ≥ 80, there will be no upper limit on P_{Max}

The Bidder shall be considered 'Qualified' as per 'Assessment of Capacity of Bidder' for the subject Tender if $P \leq P_{Max}$

(Where P is calculated as per clause 'I' above)

Note: For the transition period of 1 year (i.e. for all the NITs floated between 11th May 2019 to 10th May 2020), in addition to above, 'Assessment of Capacity of Bidder' shall also be calculated considering 'performance scores' till 36 months as per Sl. no II ii).

Higher of the results obtained out of both shall be considered for 'Assessment of Capacity of Bidder'.

IV. Explanatory note:

i). Similar package means Boiler or ESP or Piping or Turbine or Civil or Structure or Electrical or C&I etc. at the individual level irrespective of rating of Plant and irrespective of whether the subject tender is a single package or as part of combined/composite packages. Normally Boiler, ESP, Piping, Turbine, Electrical, C&I, Civil, Structure etc. is considered individual level of package. For example, in case the tendered scope is a Boiler Vertical Package comprising of Boiler, ESP and Power Cycle Piping (i.e. the 'identified packages as per Table-1 below), the 'PERFORMANCE' part against sl.no. II above, needs to be evaluated considering all the identified packages (i.e. Boiler, ESP and Power Cycle Piping) and finally the Bidder's capacity to execute the tendered scope is assessed in line with III above.

ii). Identified Packages (Unit wise)

Table-1

Civil	Electrical and C&I	Mechanical
i). Enabling works ii). Pile and Pile Caps iii). Civil Works including foundations iv). Structural Steel Fabrication & Erection v). Chimney vi). Cooling Tower vii). Others (Civil)	i). Electrical ii). C&I iii). Others (Elect. and C&I)	i). Boiler & Aux (All types including CW Piping if applicable) ii). Power Cycle Piping/Critical Piping iii). ESP iv). LP Piping v). Steam Turbine Generator set & Aux vi). Gas Turbine Generator set & Aux vii). Hydro Turbine Generator set & Aux viii). Turbo Blower (including Steam Turbine) ix). Material Management x). Others (Mechanical)

iii). Bidders who have not been evaluated for at least six package months in the last 24 months preceding and including the Cut-off month in the online BHEL system for contractor performance evaluation in BHEL PS Regions, shall be considered "NEW VENDOR".

A 'NEW VENDOR' shall be considered qualified subject to satisfying all other tender conditions.

A 'NEW VENDOR' if awarded a job (of package/packages identified under this clause) shall be tagged as "FIRST TIMER" on the date of first LOI from BHEL.

The "FIRST TIMER" tag shall remain till completion of all the contracts against which vendor has been tagged as First Timer or availability of 6 evaluation scores within last 24 months preceding and including the Cut-off month in the online BHEL system for contractor performance evaluation in BHEL PS Regions.

A Bidder shall not be eligible for the next job as long as the Bidder is tagged as "FIRST TIMER" excepting for the Tenders which have been opened on or before the date of the bidder being tagged as 'FIRST TIMER'.

After removal of 'FIRST TIMER' tag, the Bidder shall be considered 'QUALIFIED' for the future tenders subject to satisfying all other tender conditions including 'Assessment of Capacity of Bidders'.

iv). Consequent upon applying the criteria of 'Assessment of Capacity of Bidders' detailed above on all the bidders qualified against Technical and Financial Qualification criteria, if the number of qualified bidders reduces to less than four, then for further processing of the Tender, BHEL at its discretion reserves the right to also consider the bidders who are "not qualified" as per criteria of 'Assessment of Capacity of Bidders' and for this, procedure described in following three options shall be followed:

a) All the bidders having Overall Performance Rating ('R_{BHEL}') ≥60 shall be considered qualified against criteria of 'Assessment of Capacity of Bidders'.
b) If even after using option "a", the number of qualified bidders remains less than four, then in addition to bidders considered as per option "a", "First timer" bidders having average of available performance scores ≥60 upto and including the Cut Off month shall also be considered qualified against criteria of 'Assessment of Capacity of Bidders'.
c) If even after using option "a" and "b", the number of qualified bidders remains less than four, then in addition to bidders considered as per option "a" and "b", "First timer" bidders for whom no performance score is available in the system upto and including the Cut Off month, shall also be considered qualified against criteria of 'Assessment of Capacity of Bidders'.

Note:- In case, the number of bidders qualified against Technical and Financial Qualification criteria itself is less than four, then all bidders (a)- having Overall Performance Rating ('R_{BHEL}') ≥60, (b)- First timer" bidders having average of available performance scores ≥60 upto and including the Cut Off month, (c)- "First timer" bidders for whom no performance score is available in the system upto and including the Cut Off month, shall be considered qualified against criteria of 'Assessment of Capacity of Bidders' for further processing of tender.

v). 'Under execution' shall mean works in progress as per the following:

a. Up to execution of 90% of anticipated Contract Value in case of Civil, MM, Structural and Turbo Blower Packages
b. Up to Steam Blowing in case of Boiler/ESP/Piping Packages
c. Up to Synchronization in all Balance Packages

Note: BHEL at its discretion can extend (or reduce in exceptional cases in line with Contract conditions) the period defined against (a), (b) and (c) above, depending upon the balance scope of work to be completed.

vi). Contractor shall provide the latest contact details i.e. mail-ID and Correspondence Address to SCT Department, so that same can be entered in the Contractor Performance Evaluation System, and in

case of any change/discrepancy same shall be informed immediately. Login Details for viewing scores in Contractor Performance Evaluation System shall be provided to the Contractor by SCT Department.

vii). Performance Evaluation for Activity Month shall be completed in Evaluation Month (i.e. month next to Activity Month) or in rare cases in Post Evaluation Month (i.e. month next to Evaluation Month) after approval from Competent Authority. In case scores are not acceptable, Contractor can submit Review Request to GM Site/ GM Project latest by 25th of Evaluation Month or 3 days after approval of score, whichever is later. However, acceptance/rejection of 'Review Request' solely depends on the discretion of GM Site/GM Project. After acceptance of Review Request, evaluation score shall be reviewed at site and the score after completion of review process shall be acceptable and binding on the contractor.

viii). Project on Hold due to reasons not attributable to bidder -

a. Short hold: Evaluation shall not be applicable for this period, however Loading will be considered.

b. Long hold: Short hold for continuous six months and beyond or hold on account of Force Majeure shall be considered as Long Hold. Evaluation as well as Loading shall not be considered for this period.

ix). Performance evaluation in CL 8 above is applicable to Prime bidder and Consortium partner (or Technical tie up partner) for their respective scope of work.

9.0 Since the job shall be executed at site, bidders must visit site/ work area and study the job content, facilities available, availability of materials, prevailing site conditions including law & order situation, applicable wage structure, wage rules, etc before quoting for this tender. They may also consult this office before submitting their offers, for any clarifications regarding scope of work, facilities available at sites or on terms and conditions.

10.0 For any clarification on the tender document, the bidder may seek the same in writing, through e-mail or through E-Procurement Site https://bhel.abcprocure.com, as per specified format, within the scheduled date for seeking clarification, from the office of the undersigned. BHEL shall not be responsible for receipt of queries after due date of seeking clarification due to any delay. Any clarification / query received after last date for seeking clarification may not be normally entertained by BHEL and no time extension will be given.

11.0 BHEL may decide holding of pre-bid discussion [PBD] with all intending bidders as per date indicated in the NIT. The bidder shall ensure participation for the same at the appointed time, date and place as may be decided by BHEL. Bidders shall plan their visit accordingly. The outcome of pre-bid discussion (PBD) shall also form part of tender.

12.0 In the event of any conflict between requirement of any clause of this specification/ documents/drawings/data sheets etc or requirements of different codes/standards specified, the same to be brought to the knowledge of BHEL in writing for clarification before due date of seeking clarification (whichever is applicable), otherwise, interpretation by BHEL shall prevail. Any typing error/missing pages/ other clerical errors in the tender documents, noticed must be pointed out before pre-bid meeting/submission of offer else BHEL's interpretation shall prevail.

13.0 Unless specifically mentioned otherwise, bidder's quoted price shall deemed to be in compliance with tender including PBD.

14.0 Bidders shall submit Integrity Pact Agreement (Duly signed by authorized signatory who signs in the offer), along with techno - commercial bid. This pact shall be considered as a preliminary qualification for further participation. The names and other details of Independent External Monitor (IEM) for the subject tender is as given at point (xi) of 1 above.

15.0 The Bidder has to satisfy the Pre Qualifying Requirements stipulated for this Tender in order to be qualified. The Price Bids of only those bidders will be opened who will be qualified for the subject job on the basis of

satisfying the Pre Qualification Criteria specified in this NIT as per Annexure-1 (as applicable), past performance etc. and date of opening of price bids shall be intimated to only such bidders. BHEL reserves the right not to consider offers of parties under HOLD.

16.0 In case BHEL decides on a `Public Opening', the date & time of opening of the PRICE BID shall be intimated to the qualified bidders and in such as case, price bid (Volume-III) uploaded in E-procurement Site https://bhel.abcprocure.com will be opened.

17.0 Validity of the offer shall be for six months from the latest due date of offer submission (including extension, if any) unless specified otherwise.

18.0 "BHEL shall be resorting to Reverse Auction (RA) (Guidelines as available on www.bhel.com) for this tender. RA shall be conducted among all the techno-commercially qualified bidders. Price bids of all techno-commercially qualified bidders shall be opened and same shall be considered as initial bids of bidders in RA. In case any bidder(s) do(es) not participate in online Reverse Auction, their sealed envelope price bid along with applicable loading, if any, shall be considered for ranking."

19.0 On submission of offer, further consideration will be subject to compliance to tender & qualifying requirement and customer's acceptance, as applicable.

20.0 In case the bidder is an "Indian Agent of Foreign Principals", 'Agency agreement has to be submitted along with Bid, detailing the role of the agent along with the terms of payment for agency commission in INR, along with supporting documents.

21.0 The bidders shall not enter into any undisclosed M.O.U. or any understanding amongst themselves with respect to tender.

22.0 Consortium Bidding (or Technical Tie up) shall be allowed only if specified in Pre Qualifying Requirement (PQR) criteria, and in such a case the details to be complied with is enclosed herewith as per Annexure-5 UNLESS SPECIFIED OTHERWISE IN PQR.

23.0 The bidder shall submit documents in support of possession of 'Qualifying Requirements' duly self certified and stamped/ digitally signed (as applicable) by the authorized signatory, indexed and properly linked in the format for PQR. In case BHEL requires any other documents/proofs, these shall be submitted immediately.

24.0 The bidder may have to produce original document for verification if so decided by BHEL.

25.0 The offers of the bidders who are on the banned list as also the offer of the bidders, who engage the services of the banned firms, shall be rejected. The list of banned firms is available on BHEL Website (www.bhel.com).

I) Integrity commitment, performance of the contract and punitive action thereof:

a) Commitment by BHEL:

BHEL commits to take all measures necessary to prevent corruption in connection with the tender process and execution of the contract. BHEL will during the tender process treat all Bidder(s) in a transparent and fair manner, and with equity.

b) Commitment by Bidder/ Supplier/ Contractor:

b.i) The bidder/ supplier/ contractor commit to take all measures to prevent corruption and will not directly or indirectly influence any decision or benefit which he is not legally entitled to nor will act or omit in any manner which tantamount to an offence punishable under any provision of the Indian Penal Code, 1860 or any other law in force in India.

b.ii) The bidder/ supplier/ contractor will, when presenting his bid, disclose any and all payments he has made, and is committed to or intends to make to agents, brokers or any other intermediaries in connection with the award of the contract and shall adhere to relevant guidelines issued from time to time by Govt. of India/ BHEL.

b.iii) The bidder/ supplier/ contractor will perform/ execute the contract as per the contract terms & conditions and will not default without any reasonable cause, which causes loss of business/ money/ reputation, to BHEL.

If any bidder/ supplier/ contractor during pre-tendering/ tendering/ post tendering/ award/ execution/ post-execution stage includes in mal-practices, cheating, bribery, fraud or and other misconduct or formation of cartel so as to influence the bidding process or influence the price or acts or omits in any manner which tantamount to an offence punishable under any provision of the Indian Penal code, 1860 or any other law in force in India, then, action may be taken against such bidder/ supplier/ contractor as per extant guidelines of the company available on www.bhel.com and/ or under applicable legal provisions.

26.0 It may please be noted that Guidelines/Rules in respect of Suspension of business dealings (Hold- 12 to 24 Months/ Banning – 3 years etc), Vendor Evaluation formats, quality, safety and HSE guidelines , standard T&P hire charges of BHEL etc may undergo change from time to time and the latest one shall be followed. Latest "Guidelines for Vendor Evaluation" is web based, quality, safety & HSE"; standard T&P hire charges shall be available at site and shall be given to the successful vendors/ subcontractors during execution.

27.0 MSE suppliers can avail the intended benefits in respect of the procurements related to the Goods and Services only (Definition of Goods and Services as enumerated by Govt. of India vide Office Memorandum F. No. 21(8)/2011-MA dtd. 09/11/2016 office of AS & DC, MSME) if they submit along with the offer, attested copies of either EM II certificate having deemed validity (five years from the date of issue of acknowledgement in EM II) or valid NSIC certificate or Udyog Aadhar Memorandum (UAM) & Acknowledgement or EM II certificate along with attested copy of a CA certificate (Format enclosed at Annexure – C where deemed validity of EM II certificate of five years has expired) applicable for the relevant financial year (latest audited). Date to be reckoned for determining the deemed validity will be the date of bid opening (Part 1 in case of two part bid). Non submission of such documents will lead to consideration of their bid at par with other bidders. No benefit shall be applicable for this enquiry if any deficiency in the above required documents are not submitted before price bid opening. If the tender is to be submitted through e-procurement portal, then the above required documents are to be uploaded on the portal. Documents should be notarized or attested by a Gazetted officer.

Any Bidder falling under MSME category, shall furnish the following details & submit documentary evidence/Govt. Certificate etc. in support of the same along with their techno-commercial offer: -

Type under MSME	SC/ST owned	Women owned	Others
Micro			
Small			
Medium			

Note: - If the bidder does not furnish the above, offer shall be processed construing that the bidder is not falling under MSME category.

28.0 The bidder along with its associates/collaborators/sub-contractors/sub-vendors/consultants/service providers shall strictly adhere to BHEL Fraud Prevention Policy displayed on BHEL website www.bhel.com and shall immediately bring to the notice of BHEL Management about any fraud or suspected fraud as soon as it comes to their notice.

29.0 Annexure-A -Amendment to GCC/SCC shall be read in conjunction with GCC-Volume-IB & SCC-Volume-ID. This Annexure-A (Amendment to GCC/SCC) of NIT shall not be considered as part of the NIT but

addendum/corrigendum to the GCC/SCC only.

30.0 Annexure-B - Terms & conditions of Reverse Auction is enclosed herewith.

31.0 Annexure-D – Specific Clause w.r.t. BOCW Act & Cess Act is enclosed herewith.

32.0 Annexure-E- Statewise GST Registration nos. is enclosed herewith.

33.0 Duly filled & signed Annexure- CPP-GST/I to be submitted by bidders along with their techno-commercial offer.

34.0 Integrity Pact (IP) –

(a) IP is a tool to ensure that activities and transactions between the Company and its Bidders/ Contractors are handled in a fair, transparent and corruption free manner. Following Independent External Monitors (IEMs) on the present panel have been appointed by BHEL with the approval of CVC to oversee implementation of IP in BHEL.

Sl No.	IEM	Address	Phone & Email
1.	Shri Arun Chandra Verma, IPS (Retd.)	Flat No. C -1204, C Tower, Amrapali, Platinum Complex, Sector 119, Noida (U.P.)	acverma1@gmail.com
2.	Shri Virendra Bahadur Singh, IPS (Retd.)	H. No. B-5/64, Vineet Khand, Gomti Nagar, Lucknow - 226010	vbsinghips@gmail.com

(b) The IP as enclosed with the tender is to be submitted (duly signed by authorized signatory) along with techno-commercial bid (Part-I, in case of two/three part bid). Only those bidders who have entered into such an IP with BHEL would be competent to participate in the bidding. In other words, entering into this Pact would be a preliminary qualification.

(c) Please refer Section-8 of IP for Role and Responsibilities of IEMs. In case of any complaint arising out of the tendering process, the matter may be referred to any of the above IEM(s). All correspondence with the IEMs shall be done through email only.

Note:

No routine correspondence shall be addressed to the IEM (phone/ post/ email) regarding the clarifications, time extensions or any other administrative queries, etc. on the tender issued. All such clarification/ issues shall be addressed directly to the tender issuing (procurement) department's officials whose contact details are provided below:

Details of contact person(s):

Name	Malini Mandal	Subrata Sen
Dept	SCT Dept, BHEL PSER, Kolkata	SCT Dept, BHEL PSER, Kolkata
Address	DJ-9/1, Sector – II, Salt Lake, Kolkata – 700091	DJ-9/1, Sector – II, Salt Lake, Kolkata – 700091
Phone	033-2339 8225	033-2339 8226
Email ID	malini@bhel.in	subrata.sen@bhel.in
FAX	033-2321 1960	033-2321 1960

35.0 For this procurement, Public Procurement (Preference to Make in India), Order 2017 dated 15.06.2017 &

28.05.2018 and subsequent Orders issued by the respective Nodal Ministry shall be applicable even if issued after issue of this NIT but before finalization of contract/ PO/ WO against this NIT.
In the event of any Nodal Ministry prescribing higher or lower percentage of purchase preference and/ or local content in respect of this procurement, same shall be applicable.

36.0 Bidders are requested to submit their best price as per latest price schedule of the tender.

37.0 The contractor shall, at all stages of work deploy skilled/ semi-skilled tradesmen who are qualified and possess certificate in particular trade from CPWD Training Institute/ Industrial Training Institute/ National Institute of Construction Management and Research (NICMAR), National Academy of Construction, CIDC or any similar reputed and recognized Institute managed/ certified by State/ Central Government. The number of such qualified tradesmen shall not be less than 20% of total skilled/ semi-skilled workers required in each trade at any stage of work. The contractor shall submit number of man days required in respect of each trade, its scheduling and the list of qualified tradesmen along with requisite certificate from recognized Institute to Engineer-in-Charge for approval. Notwithstanding such approval, if the tradesmen are found to have inadequate skill to execute the work of respective trade, the contractor shall substitute such tradesmen within two days of written notice from Engineer-in-Charge. Failure on the part of contractor to obtain approval of Engineer-in-Charge or failure to deploy qualified tradesmen will attract a compensation to be paid by contractor at the rate of Rs. 100 per such tradesman per day. Decision of Engineer-in-Charge as to whether particular tradesman possesses requisite skill and amount of compensation in case of default shall be final and binding."

38.0 It may please be noted that Bid should be free from correction, overwriting, using corrective fluid, etc. Any interlineation, cutting, erasure or overwriting shall be valid only if they are attested under full signature(s) of person(s) signing the bid, else bid shall be liable for rejection.

All overwriting/ cutting, etc will be numbered by bid opening officials and announced during bid opening.

39.0 Order of Precedence

In the event of any ambiguity or conflict between the Tender Documents, the order of precedence shall be in the order below:

b. Amendments/Clarifications/Corrigenda/Errata etc issued in respect of the tender documents by BHEL
c. Notice Inviting Tender (NIT)
d. Price Bid-Volume-III
e. Technical Conditions of Contract (TCC) -- Volume-IF
f. Special Conditions of Contract (SCC) —Volume-ID
g. General Conditions of Contract (GCC) —Volume-IB
h. Forms and Procedures —Volume-IE

for BHARAT HEAVY ELECTRICALS LTD

Dy. Mgr (SCT)

Agency	Contact details	
BHEL, PSER, Kolkata	Address	DJ-9/1, Sector – II, Salt Lake, Kolkata – 700 091
	Phone no	033-2339 8225 / 8231/ 8000
	FAX no	033-23211960
	E-mail	malini@bhel.in; papori@bhel.in; subrata.sen@bhel.in

Enclosure

01. Annexure-1: Pre Qualification Criteria.
02. Annexure-2: Format for No deviation Certificate.
03. Annexure-3: Format for seeking clarification.
04. Annexure-4: Check List.
05. Annexure-5: Conditions for consortium/tie up.
06. Annexure -A- Amendment to GCC/SCC.
07. Annexure -B- Terms & conditions of Reverse Auction.
08. Annexure -C- CA certificate Format.
09. Annexure-D – Specific Clause w.r.t. BOCW Act & Cess Act.
10. Annexure-E- State wise GST Registration nos.
11. Annexure-CPP-GST/I.
12. Integrity Pact Agreement Format (Separate).
13. Other Tender documents as per this NIT.

ANNEXURE-1

PRE QUALIFICATION CRITERIA

JOB	**ERECTION, TESTING, COMMISSIONING, TRIAL OPERATION AND HANDING OVER OF TOTAL FLUE GAS DESULPHURIZATION SYSTEM (FGD) OF 3 X 660 MW NORTH KARANPURA STPP, JHARKHAND.**
TENDER NO	**PSER:SCT:NKP-M2050:20.**

SL NO.	CRITERIA
A	
1.0 (a)	BIDDER SHOULD HAVE AVERAGE MINIMUM ANNUAL FINANCIAL TURNOVER OF INR **20.21 CRORES** DURING THE LAST 3 (THREE) YEARS, ENDING ON 31-03-2019 OR CORRESPONDING FINANCIAL YEAR FOLLOWED BY THE BIDDER AND HAVING POSITIVE NET WORTH AS ON LATEST AUDITED ACCOUNTS AS SUBMITTED FOR PARA 1(C).
(b)	BIDDER MUST HAVE EARNED PROFIT IN ANY ONE OF THE LAST THREE FINANCIAL YEARS ENDING ON 31-03-2019 OR CORRESPONDING FINANCIAL YEAR FOLLOWED BY THE BIDDER. AUDITED BALANCE SHEET AND PROFIT & LOSS ACCOUNT OF THE COMPANY FOR LAST 3 (THREE) FINANCIAL YEARS, ENDING ON 31-03-2019 OR CORRESPONDING FINANCIAL YEAR FOLLOWED BY THE BIDDER NEED TO BE SUBMITTED IN SUPPORT OF ABOVE.
(c)	IN CASE AUDITED BALANCE SHEET AND PROFIT AND LOSS ACCOUNT HAS NOT BEEN SUBMITTED FOR ALL THREE YEARS INDICATED ABOVE THEN THE APPLICABLE FINANCIAL AUDITED STATEMENTS SUBMITTED BY THE BIDDERS AGAINST THE REQUISITE THREE YEARS WILL BE AVERAGED FOR THREE YEARS.
(d)	IF FINANCIAL STATEMENTS ARE NOT REQUIRED TO BE AUDITED STATUTORILY, THEN INSTEAD OF AUDITED FINANCIAL STATEMENTS, FINANCIAL STATEMENTS ARE REQUIRED TO BE CERTIFIED BY CHARTERED ACCOUNTANT.
2.0	BIDDER SHOULD HAVE EXECUTED FOLLOWING WORKS IN THE LAST 7 YEARS ENDING ON THE LATEST DATE OF OFFER SUBMISSION: 2.1 ERECTION AND COMMISSIONING OF AT LEAST ONE UNIT OF FGD / BOILER / ESP / STG IN ANY POWER PLANT OF 67.5 MW OR HIGHER RATING. OR 2.2 R&M WORK INVOLVING ERECTION OF AT LEAST 2000 MT OF ONE BOILER / ESP IN SINGLE CONTRACT IN POWER PLANT OF 100 MW OR HIGHER RATING. OR 2.3 EXECUTED WORK OF STRUCTURE OR NON-PRESSURE PARTS (INCLUDING DUCTING) OF a) (i) AT LEAST 14500 MT FOR STRUCTURE ERECTION WORK WITHIN A COMMON PERIOD OF TWELVE CONSECUTIVE MONTHS IN CUMULATIVE OF TWO RUNNING / COMPLETED CONTRACTS. OR (ii)AT LEAST 9666 MT FOR STRUCTURE ERECTION WORK WITHIN A PERIOD OF TWELVE CONSECUTIVE MONTHS IN ONE RUNNING / COMPLETED CONTRACTS. AND b) EXECUTED ROTARY MACHINE IN ANY POWER PLANT/ INDUSTRIAL PROJECT. RELEVANT DOCUMENT IN SUPPORT OF ABOVE SHALL BE SUBMITTED.
3.0	BIDDER SHOULD HAVE VALID PAN. RELEVANT DOCUMENT IN SUPPORT OF ABOVE SHALL BE SUBMITTED
4.0	CONSORTIUM/JV BIDDING IS NOT ALLOWED.

B	GENERAL
1.0	'EXECUTED' MEANS BIDDER SHOULD HAVE ACHIEVED THE CRITERIA SPECIFIED ABOVE EVEN IF THE CONTRACT HAS NOT BEEN COMPLETED OR CLOSED.
2.0	BIDDER SHOULD FURNISH INFORMATION REGARDING PROJECTS IN HAND, CURRENT LITIGATION, ORDERS REGARDING EXCLUSION/ EXPULSION OR BLACK LISTING.
3.0	AFTER SATISFACTORY FULFILLMENT OF ALL THE ABOVE CRITERIA, OFFER SHALL BE CONSIDERED FOR FURTHER EVALUATION AS PER NIT AND ALL OTHER TERMS OF THE TENDER SUBJECT TO CUSTOMER'S APPROVAL.
4.0	BIDDER MUST NOT BE UNDER BANKRUPTCY CODE PROCEEDINGS (IBC) BY NCLT OR UNDER LIQUIDATION / BIFR, WHICH WILL RENDER HIM INELIGIBLE FOR PARTICIPATION IN THIS TENDER, AND SHALL SUBMIT UNDERTAKING TO THIS EFFECT.

Explanatory Notes for the PQR (unless otherwise specified in the PQR):

1. Bidder to submit Audited Balance Sheet and Profit and Loss Account for the respective years as indicated along with all annexures.
2. In case audited Financial statements have not been submitted for all the three years as indicated, then the applicable audited statements submitted by the bidders against the requisite three years, will be averaged for three years i.e total divided by three.
3. Net Worth (Only in case of companies) of the bidder should be positive. Net worth shall be calculated based on the latest Audited Accounts as furnished.Net worth = Paid up share capital + Reserves.
4. PROFIT shall be PBT earned during any one year of last three financial years
5. For evaluation of PQR, in case Bidder alone does not meet the pre-qualifying technical criteria B1 above, bidder may utilize the experience of its Parent/ Subsidiary Company along with its own experience, subject to following:
   a. The parent company shall have a controlling stake of ≥50% in the subsidiary company (as per Format-1).
   b. The Parent Company/ Subsidiary Company of which experience is being utilized for bidding shall submit Security Deposit(SD) equivalent to 1% of the total contract value.
   c. The parent/ subsidiary company and bidder shall provide an undertaking that they are jointly or severally responsible for successful performance of the contract (as per Format-2).
   d. In case Bidder is submitting bid as a Consortium Partner, option of utilizing experience of parent/subsidiary Company can availed by Prime Bidder only.
   e. Parent Company/ Subsidiary Company of which experience is being used for bidding, cannot participate as a 'Standalone Bidder' or as a 'Consortium bidder'.
6. Completion date for achievement of the technical criteria specified in the Common QR should be in the last 7 years ending on the 'latest date of Bid Submission' of Tender irrespective of date of the start of work.
7. 'EXECUTED' means the bidder should have achieved the criteria specified in the Technical criteria of PQR even if the Contract has not been completed or closed
8. In case the Experience/PO/WO certificate enclosed by bidders do not have separate break up of prices for the E&C portion for Electrical and C&I works (i.e. the certificates enclosed are for composite order for supply and erection of Electrical and C&I and other works if any), then value of Erection & Commissioning for the Electrical and C&I portion shall be considered as 15% of the price for supply & erection of Electrical and C&I.
9. Unless otherwise specified, for the purpose of "Technical Criteria" of PQR , the word 'EXECUTED' means achievement of milestones as defined below -
   - "ACHIEVEMENT OF PHYSICAL QUANTITIES" as per PQRs.
   - "READINESS FOR COAL FILLING" of at least one Bunker, in respect of Mill Bunker Structure.
   - "CHARGING" in respect of Power Transformers/ Bus Ducts/ "HT/LT Switchgears" / "HT/LT Cabling".
   - For C&I works: "SYNCHRONISATION" in case of power project / "WORK EXECUTION of the value as defined in PQR" in case of industry.
   - "BOILER LIGHT UP" in respect of Boiler / CFBC / ESP.
   - "CHARGING OF ATLEAST ONE PASS" in respect of ESP(R&M)
   - "GAS IN" in respect of HRSG.
   - "STEAM BLOWING" in respect of Power Cycle Piping.
   - "HYDRAULIC TEST"/ ANY OTHER EQUIVALENT TEST LIKE "100% RT/UT OF WELDED JOINTS" of the system in respect of Pressure parts/ LP Piping/CW Piping.
   - "FULL LOAD OPERATION OF THE UNIT" in respect of Insulation work.
   - "SYNCHRONISATION" in respect of STG / GTG.
   - "SPINNING" in respect of HTG.
   - "GAS IN" in respect of FGD
10. Boiler means HRSG or WHRB or any other types of Steam Generator
11. Power Cycle piping means Main Steam, Hot Reheat, Cold Reheat, HP Bypass
12. For the purpose of evaluation of the PQR, one MW shall be considered equivalent to 3.5 TPH where ever rating of HRSG/BOILER is mentioned in MW. Similarly, where ever rating of Gas Turbine is mentioned in terms of Frame size, ISO rating of the same in terms of MW shall be considered for evaluation.
13. Value of work is to be updated with indices for "All India Avg. Consumer Price index for industrial workers" and "Monthly Whole Sale Price Index for All Commodities" with base month as per last month of work execution and indexed up to three (3) months prior to the month of latest due date of bid submission as per following formula-

$$P = R + 0.425 \times R \times \frac{(X_N - X_0)}{X_0} + 0.425 \times R \times \frac{(Y_N - Y_0)}{Y_0}$$

Where

P = Updated value of work

R = Value of executed work

X_N = All India Avg. Consumer Price index for industrial workers for three months prior to the month of latest due date of bid submission (e.g. If latest bid submission date is 02-Mar-17, then bid submission month shall be reckoned as March'17 and index for Dec'2016 shall be considered).

X_0 = All India Avg. Consumer Price index for industrial workers for last month of work execution

Y_N = Monthly Whole Sale Price Index for All Commodities for three months prior to the month of latest due date of bid submission (e.g. If latest bid submission date is 02-Mar-17, then bid submission month shall be reckoned as March'17 and index for Dec'2016 shall be considered).

Y_0 = Monthly Whole Sale Price Index for All Commodities for last month of work execution

14. Bidder must not be under Bankruptcy Code Proceedings (IBC) by NCLT or under Liquidation / BIFR, which will render him ineligible for participation in this tender, and shall submit undertaking to this effect.

Format-1

Certificate for relationship between parent company/subsidiary company and the bidder

To,

Dear Sir,

Sub: Bid for NIT No.:_____ dated._____For

_____(name of bidder).

We hereby certify that M/s._____is Parent company/subsidiary company of M/s._____(the bidder)and details of equity holding of the Parent Company in the subsidiary company as on _____
(not earlier than seven days prior to the bid submission date) are given as below:

Name of Parent Company	Name of Subsidiary Company	Percentage of Equity Holding of Pare Company in Subsidiary Company

(Name and signature of statutory auditor or Practicing company Secretary of the bidder)

Format-2

Undertaking from the Parent Company/Subsidiary Company of the bidder

(On the letterhead of Parent Company/Subsidiary Company,as applicable)

From,
NAME:
FULL ADDRESS:

Telephone No.:
Email address:
Fax/No.:

To,
_____

_____

Dear Sir,

We refer to the NIT No.:_____ dated:_____for the job of: _____ _____(name of tender).

We have carefully read and examined in detail the NIT/Tender Terms and Conditions,including in particular,Clause_____of the NIT/Tender, regarding submission of an undertaking, as per the prescribed Format-1 of the NIT/Tender.

We confirm that M/s._____ (the bidder) has been authorized by us to use our Technical Capability for meeting the technical criteria as specified in Clause _____of the PQR of the NIT/Tender referred above.

We agree to submit the Security Deposit equivalent to 1% of Contract value in addition to Security Deposit to be submitted by bidder as per Clause _____of NIT/Tender for fulfillment of all obligations in terms of provisions of the contract, in the event of _____ (the bidder) being selected as the Successful bidder.

We confirm that we along with M/s._____(the bidder), are jointly or severally responsible for successful performance of the contract.

We confirm that our company shall not participate in the above tender as a 'standalone bidder' or as a 'consortium bidder' and also shall not authorize any other bidder to use our Technical capability for the above tender.

All the terms used herein but not defined,shall have the meaning as ascribed to the said terms under the referred NIT/Tender.

Signature of Managing Director/Authorized Signatory of Parent/Subsidiary Company

ANNEXURE - 2

FORMAT FOR NO DEVIATION CERTIFICATE
(To be submitted in the bidder's letter head)

BHARAT HEAVY ELECTRICALS LIMITED,
Power Sector - Eastern Region,
Plot no 9/1, DJ Block, Sector – II, Salt Lake City,
Kolkata – 700 091

Sub	No Deviation Certificate.	
Job	ERECTION, TESTING, COMMISSIONING, TRIAL OPERATION AND HANDING OVER OF TOTAL FLUE GAS DESULPHURIZATION SYSTEM (FGD) OF 3 X 660 MW NORTH KARANPURA STPP, JHARKHAND.	
Ref	1.0	TENDER NO:PSER:SCT:NKP-M2050:20.
	2.0	BHEL's NIT, vide reference no: PSER:SCT:NKP-M2050:7968 Date: 11-06-2020.
	3.0	All other pertinent issues till date.

Dear Sirs,

With reference to above, this is to confirm that as per tender conditions, we have visited site before submission of our offer and noted the job content & site conditions etc. We also confirm that we have not changed/ modified the tender documents as appeared in the website/ issued by you and in case of such observance at any stage, it shall be treated as null and void.

We hereby confirm that we have not taken any deviation from tender clauses together with other references as enumerated in the above referred NIT. We hereby confirm our unqualified acceptance to all terms & conditions, unqualified compliance to technical specification, integrity pact (if applicable) and acceptance to reverse auctioning process.

In the event of observance of any deviation in any part of our offer at a later date whether implicit or explicit, the deviations shall stand null & void.

We confirm to have submitted/uploaded offer/documents in accordance with tender instructions with acceptance of the terms & conditions of the tender by us and as per aforesaid references.

Thanking you,

Yours faithfully,

(Signature, date & seal of authorized
representative of the bidder)

ANNEXURE - 3

FORMAT FOR SEEKING CLARIFICATION

JOB	ERECTION, TESTING, COMMISSIONING, TRIAL OPERATION AND HANDING OVER OF TOTAL FLUE GAS DESULPHURIZATION SYSTEM (FGD) OF 3 X 660 MW NORTH KARANPURA STPP, JHARKHAND.
TENDER NO	TENDER NO:PSER:SCT:NKP-M2050:20.

Sl no	Reference clause of tender document	Existing provision	Bidder's query	BHEL's clarification

ANNEXURE - 4

CHECK LIST

NOTE:- Tenderers are required to fill in the following details and no column should be left blank

1	Name and Address of the Tenderer	
2	Details about type of the Firm/Company	
3.a	Details of Contact person for this Tender	Name : Mr/Ms Designation: Telephone No: Mobile No: Email ID: Fax No:
3.b	Details of alternate Contact person for this Tender	Name : Mr/Ms Designation: Telephone No: Mobile No: Email ID: Fax No:
4	EMD DETAILS	DD No: Date : Bank : Amount: Please tick (√) whichever applicable:- ONE TIME EMD / ONLY FOR THIS TENDER
5	Validity of Offer	TO BE VALID FOR SIX MONTHS FROM DUE DATE

		APPLICABILITY(BY BHEL)	ENCLOSED BY BIDDER
6	Whether the format for compliance with PRE QUALIFICATION CRITERIA (ANNEXURE-I) is understood and filled with proper supporting documents referenced in the specified format	Applicable	YES / NO
7	Audited profit and Loss Account for the last three years	Applicable/Not Applicable	YES/NO
8	Copy of PAN Card	Applicable/Not Applicable	YES/NO
9	Whether all pages of the Tender documents including annexures, appendices etc are read understood and signed	Applicable/Not Applicable	YES/NO
10	Integrity Pact	Applicable/Not Applicable	YES/NO
11	Declaration by Authorised Signatory	Applicable/Not Applicable	YES/NO
12	No Deviation Certificate	Applicable/Not Applicable	YES/NO
13	Declaration confirming knowledge about Site Conditions	Applicable/Not Applicable	YES/NO
14	Declaration for relation in BHEL	Applicable/Not Applicable	YES/NO
15	Non Disclosure Certificate	Applicable/Not Applicable	YES/NO
16	Bank Account Details for E-Payment	Applicable/Not Applicable	YES/NO
17	Capacity Evaluation of Bidder for current Tender	Applicable/Not Applicable	YES/NO
18	Tie Ups/Consortium Agreement are submitted as per format	Applicable/Not Applicable	YES/NO
19	Power of Attorney for Submission of Tender/Signing Contract Agreement	Applicable/Not Applicable	YES/NO
20	Analysis of Unit rates	Applicable/Not Applicable	YES/NO
21	Bankruptcy Code Proceedings (IBC) by NCLT or under Liquidation / BIFR (Undertaking to be enclosed if not applicable)	Applicable/Not Applicable	YES/NO

NOTE: STRIKE OFF 'YES' OR 'NO', AS APPLICABLE. TENDER NOT ACCOMPANIED BY THE PRESCRIBED ABOVE APPLICABLE DOCUMENTS ARE LIABLE TO BE SUMMARILY REJECTED.

DATE :

AUTHORISED SIGNATORY
(With Name, Designation and Company seal)

ANNEXURE-5

CONDITIONS TO BE COMPLIED WITH FOR CONSORTIUM BIDDING (TECHNICAL TIE UP)

1 Prime Bidder and Consortium Partner or partners are required to enter into a consortium agreement with a validity period of six months initially. In case the consortium is awarded the contract, then the Consortium Agreement between the Prime Bidder and Consortium Partner or partners shall be extended till contractual completion period including extension periods if any applicable. The Prime Bidder and Consortium Partner(s) shall certify to BHEL regarding existence and validity of their consortium agreement on six monthly basis.

2 Standalone' bidder cannot become a 'Prime Bidder' or a 'Consortium bidder' or 'Technical Tie up bidder' in a consortium (or Technical Tie up) bidding. Prime bidder shall neither be a consortium partner to other prime bidder nor take any other consortium partners. However, consortium partner may enter into consortium agreement with other prime bidders. In case of non compliance, consortium bids of such Prime bidders will be rejected.

3 Prime Bidder and Consortium partners shall be approved by Customer for being considered for the tender (applicable if customer approval is required).

4 Number of partners for a consortium Bidding (or Technical Tie up) shall be as specified in the PQR.

5 In order to be qualified for the tender, Prime Bidder and Consortium partner or partners shall satisfy (i) the Technical 'Pre Qualifying Requirements' specified for the respective package, (ii) "Assessment of Capacity of Bidder' as specified in clause 8.0.

6 Prime Bidder shall comply with additional 'Technical' criteria of PQR as defined in 'Explanatory Notes for the PQR.

7 Prime Bidder shall comply with all other Pre Qualifying criteria for the Tender unless otherwise specified.

8 Prime Bidder shall be the Bidder who has a major share of work.

9 Prime Bidder shall be responsible for the overall execution of the contract.

10 Performance shall be evaluated for Prime Bidder and Consortium Partner or partners for their respective scope of work(s).

11 In case the Consortium partner backs out, another consortium partner meeting the QRs, has to be engaged by Prime Bidder and if not, the respective work will be withdrawn and executed on risk and cost basis of the prime bidder.

12 In case Prime Bidder withdraws or insolvency / liquidation / winding up proceedings have been initiated / admitted against the Prime Bidder, BHEL reserves the right to cancel, terminate or short close the contract or take any other action to safeguard BHEL's interest in the Project / Contract. This action will be without prejudice to any other action that BHEL can take under Law and the Contract to safeguard interests of BHEL.

13 After successful execution of one work with a consortium partner under direct orders of BHEL, the Prime Bidder shall be eligible for becoming a 'standalone' bidder for works similar to that for which consortium partner was engaged, for subsequent tenders.

14 The Consortium partner shall submit SD equivalent to 1% of the total contract value in addition to the SD to be submitted by the Prime Bidder for the total contract value.

15 In case of a Technical Tie up, all the clauses applicable for the Consortium partner shall be applicable for the Technical Tie up partner also.

Annexure - A

Amendment to GCC/SCC

1. Introduction of Clause No 1.15.13 in GCC as below:

Clause No 1.15.13: Additional security deposit (SD) has to be submitted by the successful bidder with value as follows:

"If the final price of successful bidder is lesser by 'more than 20%' of BHEL's estimate - 'Additional Security Deposit' will be required to be submitted by the successful bidder with value as follows:

Additional Security Deposit = 30 % of (A-B) limited to a maximum of 10% of the 'Total Price/Contract Value', where,

A = 80% of BHEL estimate

B = The final offered price of successful bidder through RA (In case of RA)

OR

Sealed paper price bid of successful bidder (in case of paper bid)

This 'Additional Security Deposit' shall have the same validity as that of the 'Security Deposit' and shall be revalidated/released in the manner as spelt out for the 'Security Deposit' as per relevant clause of GCC.

The BHEL's estimated value shall be disclosed to the successful bidder (on their request) at appropriate juncture in case 'Additional Security Deposit' is applicable."

2. Clause no. 1.9.1(ii) of GCC shall be read as below:

The EMD may be accepted only in the following forms:

(a) Cash deposit as permissible under the extant Income Tax Act (before tender opening)

(b) Electronic Fund Transfer credited in BHEL account (before tender opening)

(c) Banker's cheque/ Pay order/ Demand draft, in favour of BHEL (along with offer)

(d) Fixed Deposit Receipt (FDR) issued by Scheduled Banks/ Public Financial Institutions as defined in the Companies Act (FDR should be in the name of the Contractor, a/c BHEL).

In addition to above, the EMD amount in excess of Rs. 2 Lakh may also be accepted in the form of Bank Guarantee from scheduled bank. The Bank Guarantee in such cases shall be valid for atleast six months. EMD of successful tenderer will be retained as part of Security Deposit.

Clause no. 1.9.1(iv) & (v) of GCC stands deleted.

3. Clause no. 1.10.1 of GCC shall be read as below:

The total amount of Security Deposit will be 5% of the contract value. EMD of the successful tenderer shall be converted and adjusted towards the required amount of Security Deposit.

4. Clause no. 1.10.2 of GCC shall be read as below:

At least 50% of the required Security Deposit, including the EMD, should be furnished before start of the work. Balance of the Security Deposit can be deposited by deducting 10% of the gross amount progressively from each of the running bills of the Contractor till the total amount of the required Security Deposit is collected.

The recoveries made from running bills (cash deduction towards balance SD amount) can be released against submission of equivalent Bank Guarantee in acceptable form, but only once, before completion of work, with the approval of competent authorities.

5. Clause no. 1.10.3 of GCC shall be read as below:

The balance amount to make up the required Security Deposit of 5% of the contract value may be accepted in the following forms:

a) Cash (as permissible under the extant Income Tax Act)
b) Local cheques of Scheduled Banks (subject to realization)/ Pay Order/ Demand Draft/ Electronic Fund Transfer in favour of BHEL
c) Bank Guarantee from Scheduled Banks/ Public Financial Institutions as defined in the Companies Act. The Bank Guarantee format should have the approval of BHEL
d) Fixed Deposit Receipt issued by Scheduled Banks/ Public Financial Institutions as defined in the Companies Act (FDR should be in the name of the Contractor, a/c BHEL)
e) Securities available from Indian Post offices such as National Savings Certificates, Kisan Vikas Patras etc. (held in the name of Contractor furnishing the security and duly endorsed/ hypothecated/ pledged, as applicable, in favour of BHEL)

(Note: BHEL will not be liable or responsible in any manner for the collection of interest or renewal of the documents or in any other matter connected therewith)

6. Introduction of Clause No. 1.10.8 in GCC as below:

Clause No 1.10.8: SDBG to be furnished by the vendor before start of work. No payment will be released till SDBG is submitted by the vendor.
If requested by the vendor, cash recovery equivalent to SDBG value to be made from bills submitted by the vendor.
Also recovery of interest calculated @SBI PLR +2% on amount equivalent to SDBG / PBG value to be made for the gap period (difference between date of start of work and date of submission of BG / cash recovery).
In case of delay in extension of SDBG, in case of validity expiry, SDBG shall be invoked. However if the vendor submits a new BG after invocation of the previous BG then, it shall be refunded and recovery for the gap period, i.e. the duration for which BG is not available shall be made as stated above.

7. Clause no. 1.11 of GCC shall be read as below:

Security Deposit shall be refunded/Bank Guarantee(s) released to the Contractor along with the 'Final Bill' after deducting all expenses / other amounts due to BHEL under the contract / other contracts entered into with them by BHEL upon fulfilment of contractual obligations as per terms of the contract.

8. Clause no. 2.8.3, 2.8.4 and 2.8.5 of GCC shall be read as below:

Clause no. 2.8.3: The contractor shall comply with all applicable State and Central Laws, Statutory Rules, Regulations, Notifications, etc. such as Payment of Wages Act, Minimum Wages Act, Workmen Compensation Act, Employer's Liability Act, Industrial Disputes Act, Employers Provident Act, Employees State Insurance Scheme, Contract Labour (Regulation and Abolition) Act, 1970, Payment of Bonus & Gratuity Act, Building and Other Construction Workers (Regulation of Employment and Conditions of Service) Act, 1996, The Building and Other Construction Workers' Welfare Cess Act, 1996 and other Acts, Rules, and Regulations for labour/workers as applicable and as may be enacted by the State

Government and Central Govt. during the tenure of the Contract and having force or jurisdiction at Site. The Contractor shall also comply with provisions of and give all such notices to the local Governing Body, Police and other relevant Authorities as may be required by the Law.

Clause no. 2.8.4: The Contractor shall obtain independent License under the Contract Labour (Regulations and Abolition) Act, 1970 for engaging contract labour as required from the concerned Authorities based on the certificate (Form- V) issued by the Principal Employer/Customer.

Clause no. 2.8.5: The contractor shall pay and bear all taxes, fees, license charges, Cess, duties, deposits, tolls, royalties, commission or other charges which may be leviable on account of his operations in executing the contract.

9. Clause 2.12 of GCC (Overrun Compensation)

2.12 OVERRUN COMPENSATION (ORC)

2.12.1 ORC during original contract period: No ORC shall be applicable during the original contract period.

2.12.2 ORC during extended period for the reasons solely attributable to contractor: No ORC shall be applicable during the extended period granted for the reasons solely attributable to contractor and work executed during this period shall be paid as per original contract rates.

2.12.3 ORC during extended period for the reasons not attributable to contractor: ORC shall be payable as per following procedure:

2.12.3.1 For initial period of twelve months of extended period, ORC rate applicable over executed value shall be 5%. For every subsequent period of twelve months, ORC rate shall be further increased by 5% over the previous rate. For example, ORC rates applicable for initial period of 12 months and subsequent period of 12 months are given below.

Sl. No.	Extended Period for the reasons attributable to BHEL	ORC rate applicable over executed value
1	First 12 months	5%
2	13th-24th month and so on	10.25% {[(1.05 x 1.05)-1] x 100}

This process of increasing ORC rate for each subsequent period of 12 months shall continue till applicability of ORC.

2.12.3.2 On completion of original contract period as well as on completion of each subsequent period of twelve months i.e. at the time of change in applicable ORC rate, Delay Analysis shall be carried out and percentage shortfall attributable to both BHEL & Contractor shall be calculated.

2.12.3.3 For the purpose of calculation of ORC, executed value of work in the month shall be divided in Part-1 and Part-2 in proportion of percentage shortfall attributable to BHEL and contractor respectively, based on the last delay analysis as worked out in 2.12.3.2.
ORC shall be payable only on Part-1 and no ORC shall be payable on Part-2.

Value of Part-1 shall be further limited to the value of actual inputs provided by BHEL i.e. “Plan - Shortfall attributable to BHEL” for the month, as per Form-14 for calculation of ORC.

2.12.3.4 Payment of ORC amount shall be further regulated as follows:
(i) 50% of the ORC is allocated for deployment of matching resources (with weightages) agreed as per the joint programme drawn vide 2.11.4. ORC Payment against resources shall be

calculated in proportion to percentage of resources actually deployed w.r.t. planned resources, as per Form-14.

(ii) 50% of ORC is allocated for achieving of planned progress agreed as per the joint programme drawn vide 2.11.4. ORC Payment shall be reduced in proportion to percentage shortfall attributable to contractor w.r.t. "Plan - Shortfall attributable to BHEL" for the month, as per Form-14.

2.12.3.5 The maximum amount of ORC payable for the month shall be limited to Rs. 5,00,000/-.

2.12.3.6 In case, there is no shortfall attributable to contractor for the month and also contractor has deployed the resources as agreed in Form-14 but ORC amount payable for the month worked out as per procedure mentioned in clause 2.12.3.3, 2.12.3.4 and 2.12.3.5, is less than Rs.1,00,000/-, then ORC amount payable for the month shall be Rs.1,00,000/- otherwise ORC amount payable for the month shall remain same.

2.12.3.7 In case execution is on HOLD (Other than Force Majeure), ORC shall be payable as per following:

i). Contractor has not been permitted by BHEL to de-mobilize
   a) ORC amount of Rs. 1,00,000/- per month shall be applicable during the period of HOLD provided resources as planned are deployed (not demobilised) during the period of hold.
   b) Subsequent to lifting of HOLD, Period of HOLD shall not be excluded in calculation of period for deciding applicable ORC rate as per clause 2.12.3.1.

ii). Contractor has been permitted to demobilize and to remobilize after lifting of HOLD
   a) No ORC shall be payable to contractor for the period of HOLD.
   b) Subsequent to lifting of HOLD, Period of HOLD shall not be excluded in calculation of period for deciding applicable ORC rate as per clause 2.12.3.1.

2.12.3.8 In case Force Majeure is invoked:
   (i) No ORC shall be applicable during the period of Force Majeure.
   (ii) Subsequent to revocation of Force Majeure, period of Force Majeure shall be excluded in calculation of period for deciding applicable ORC rate as per clause 2.12.3.1.

2.12.4 Applicability of ORC: ORC shall not be applicable for following activities.
   (i) Area cleaning, removal of temporary structures and return of scrap.
   (ii) Punch list points / pending points liquidation pending due to reasons attributable to contractor
   (iii) Submission of "As built Drawing"
   (iv) Material Reconciliation
   (v) Completion of Contract Closure formalities like HR Clearance/ No dues from various dept./ Statutory Authorities etc.

2.12.5 Total Over Run Compensation shall be limited to 10% of the cumulatively executed contract value till the month (excluding Taxes and Duties if payable extra). For this purpose, executed contract value excludes PVC, ORC and Extra/Supplementary Works.

10. Clause 2.14 of GCC (Quantity Variation)

a) Existing Clause 2.14.1 of GCC stands revised as follows:

"The quantities given in the contract are tentative and may change to any extent (both in plus side and minus side). The quoted rates for individual items shall remain firm irrespective of any variations in the individual quantities No compensation becomes payable in case the variation of the final executed contract value is within the limit of Minus (-) 15% of awarded contract value"

b) Existing Clause 2.14.2 ii). of GCC stands revised as follows:

"In case the finally executed contract value increases above the awarded Contract Value due to quantity variation, there will be no upward revision in the rates for the individual items and also contractor is not eligible for any compensation."

11. Clause 2.17 of GCC (Price Variation Compensation) stands revised as follows:

2.17 PRICE VARIATION COMPENSATION

2.17.1 In order to take care of variation in cost of execution of work on either side, due to variation in the index of LABOUR, HIGH SPEED DIESEL OIL, WELDING ROD, CEMENT, STEEL, MATERIALS,
Price Variation Formula as described herein shall be applicable (only for works executed during extended period, if any, subject to other conditions as described in this section)

2.17.2 85% component of Contract Value shall be considered for PVC calculations and remaining 15% shall be treated as fixed component. The basis for calculation of price variation in each category, their component, Base Index shall be as under:

SL NO	CATEGORY	BASE INDEX	PERCENTAGECOMPONENT('K')				
			CIVIL PACKAGES (See Note A/B/C)			MECHANICAL PACKAGES	Electrical, C&I Material Management/Handling and other labour oriented packages
			A	B	C		
i)	LABOUR (ALL CATEGORIES)	'MONTHLY ALL-INDIA AVERAGE CONSUMER PRICE INDEX NUMBERS FOR INDUSTRIAL WORKERS' published by Labour Bureau, Ministry of Labour and Employment, Government of India. (Website: labourbureau.nic.in)	40	25	30	65	80
ii)	HIGH SPEED DIESEL OIL	Name of Commodity: HSD Commodity Code: 1202000005 (See Note E)	5	3	5	5	5
iii)	WELDING ROD	Name of Commodity: MANUFACTURE OF BASIC METALS Commodity Code: 1314000000 (See Note E)				15	
iv)	CEMENT	Name of Commodity: ORDINARY PORTLAND CEMENT Commodity Code: 1313050003 (See Note E)		20	30		
v)	STEEL (Structural and Reinforcement Steel)	Name of Commodity: MILD STEEL: LONG PRODUCTS Commodity Code: 1314040000 (See Note E)		25			
vi)	All OTHER MATERIALS (Other than Cement & Steel)	Name of Commodity: ALL COMMODITIES Commodity Code: 1000000000 (See Note E)	40	12	20		

Note: A) Cement & Steel:Free Issue (BHEL Scope)
B) Cement & Steel :In Contractor Scope
C) Cement in Contractor Scope, and Steel is Free Issue (BHEL Scope)

D) For Composite packages (i.e. Civii+Mechanicai+Eiectrical and/or CI or Civil+Mechanical or Mechanicai+Eiectrical and/or CI}, the COMPONENT ('K') for various categories shall be as per respective packages as above.

E) As per the 'MONTHLY WHOLE SALE PRICE INDEX' for the respective Commodity and Type, published by Office of Economic Adviser, Ministry of Commerce and Industry, Government of India. (Website: http://eaindustry.nic.in/home.asp). Revisions in the index or commodity will be re adjusted accordingly.

2.17.3 #

2.17.4 Payment/recovery due to variation in index shall be determined on the basis of the following notional formula in respect of the identified COMPONENT ('K') viz LABOUR, HIGH SPEED DIESEL OIL, WELDING ROD, CEMENT, STEEL, MATERIALS.

$$P = K \times R \times \frac{(X_N - Xo)}{Xo}$$

Where

P = Amount to be paid/recovered due to variation in the Index for Labour, High Speed Diesel Oil, Welding Rod, Cement, Steel and Materials

K = Percentage COMPONENT ('K') applicable for Labour, High Speed Diesel Oil, Welding Rod, Cement, Steel and Materials

R =Value of work done for the billing month (Excluding Taxes and Duties if payable extra)

X_N = Revised Index for Labour, High Speed Diesel Oil, Welding Rod, Cement, Steel and Materials for the billing month under consideration

Xo = Index for Labour, High Speed Diesel Oil, Welding Rod, Cement, Steel and Materials as on the Base date

2.17.5 Base date shall be the calendar month of the schedule completion date (i.e. Actual start date+ Scheduled Contractual completion period as per Letter of Intent/award and/or work order).

2.17.6 PVC shall not be payable for the ORC amount, Supplementary/Additional Items, Extra works.
However, PVC will be payable for items executed under quantity variation of BOQ items under originally awarded contract.

2.17.7 The contractor shall furnish necessary monthly bulletins in support of the requisite indices from the relevant websites along with his Bills.

2.17.8 The contractor will be required to raise the bills for price variation payments on a monthly basis along with the running bills irrespective of the fact whether any increase/decrease in the index for relevant categories has taken place or not. In case there is delay in publication of bulletins (final figure), the provisional values as published can be considered for payments and arrears shall be paid/recovered on getting the final values.

2.17.9 PVC shall be applicable only, during the extended period of contract (if any) after the scheduled completion period and for the portion of work delayed / backlog for the reasons not attributable to the Contractor.

However total quantum of Price Variation amount payable/recoverable shall be regulated as follows:

i. For the portion of shortfall / backlog not attributable to contractor, PVC shall be worked out on the basis of indices applicable for the respective month in which work is done. Base index shall be applicable as defined in clause 2.17.5

ii. In case of Force majeure, PVC shall be regulated as per (a) or (b) below:

a) Force majeure is invoked before "base date"/ “revised base date" (as explained below) OR immediately after "base date"/ “revised base date" in continuation (i.e. during the period when PVC is not applicable):

1. Base date shall be revised: Revised base date =Previous base date+ duration of Force majeure.
No PVC will be applicable for the work done till revised base date.

2. PVC will be applicable for the work done after "base date"/ "revised base date" as the case may be (during extended period when delay is not attributable to contractor). PVC shall be worked out on the basis of indices applicable for the respective month in which work is done with base index as on "base date"/"revised base date" as the case may be.

b) Force majeure is invoked after "base date"/ "revised base date" as the case may be (during extended period when delay is not attributable to contractor) -

1. PVC shall be applicable for the work done after revocation of force majeure.
2. PVC for the work done after revocation of force majeure shall be worked out on the basis of indices applicable for the respective month in which work is done excluding the effect of change in indices during total period of Force majeure(s) invoked after "base date"/ "revised base date" as the case may be. Base index shall be taken as on "base date"/ "revised base date" as the case may be.

iii. The total amount of PVC shall not exceed 15% of the cumulatively executed contract value. Executed contract value for this purpose is exclusive of PVC, ORC, Supplementary/Additional Items and Extra works except extra items due to quantity variation.

12. Clause 2.2 of GCC (Law governing the contract and court jurisdiction) stands revised as follows:

"The contract shall be governed by the Law for the time being in force in the Republic of India. Subject to Clause 2.21.1 or 2.21.2 of this Contract, the Civil Court having original Civil Jurisdiction at Delhi for PSNR, at Kolkata for PSER, at Nagpur for PSWR and at Chennai for PSSR, shall alone have exclusive jurisdiction in regard to all matters in respect of the Contract."

13. Existing Clause 2.21 "ARBITRATION" of GCC has been amended as follows:

2.21 ARBITRATION & CONCILIATION

2.21.1 ARBITRATION:

2.21.1.1 Except as provided elsewhere in this Contract, in case Parties are unable to reach amicable settlement (whether by Conciliation to be conducted as provided in Clause 2.21.2 herein below or otherwise) in respect of any dispute or difference; arising out of the formation, breach, termination, validity or execution of the Contract; or, the respective rights and liabilities of the Parties; or, in relation to interpretation of any provision of the Contract; or. in any manner touching upon the Contract (hereinafter referred to as the 'Dispute'), then, either Party may, commence arbitration in respect of such Dispute by issuance of a notice in terms of section 21 of the Arbitration & Conciliation Act, 1996 (hereinafter referred to as the 'Notice'). The Notice shall contain the particulars of all claims to be referred to arbitration in sufficient detail and shall also indicate the monetary amount of such claim. The arbitration shall be conducted by a sole arbitrator to be appointed by the Head of the BHEL Power Sector Region issuing the Contract within 60 days of receipt of the complete Notice. The language of arbitration shall be English.

The Arbitrator shall pass a reasoned award.

Subject as aforesaid, the provisions of Arbitration and Conciliation Act 1996 (India) or statutory modifications or re-enactments thereof and the rules made thereunder as in force from time to time shall apply to the arbitration proceedings under this clause. The seat of arbitration shall be Kolkata (the place from where the contract is Issued). The Contract shall be governed by and be construed as per provisions of the laws of India. Subject to this provision 2.21.1.1 regarding ARBITRATION, the principal civil court exercising ordinary civil jurisdiction over the area where the seat of arbitration is located shall have exclusive jurisdiction over any DISPUTE to the exclusion of any other court.

2.21.1.2 In case of Contract with Public Sector Enterprise (PSE) or a Government Department, the following shall be applicable:

In the event of any dispute or difference relating to the interpretation and application of the provisions of commercial contract(s) between Central Public Sector Enterprises (CPSEs)/ Port Trusts inter se and also between CPSEs and Government Departments/Organizations (excluding disputes concerning Railways, Income Tax, Customs & Excise Departments), such dispute or difference shall be taken up by either party for resolution through AMRCD (Administrative Mechanism for Resolution of CPSEs Disputes) as mentioned in DPE OM No. 4(1)/2013-DPE(GM)/FTS-1835 dated 22-05-2018 as amended from time to time.

2.21.1.3 The cost of arbitration shall initially be borne equally by the Parties subject to the final allocation thereof as per the award/order passed by the Arbitrator.

2.21.1.4 Notwithstanding the existence of any dispute or differences and/or reference for the arbitration, the Contractor shall proceed with and continue without hindrance the performance of its obligations under this Contract with due diligence and expedition in a professional manner unless the dispute inter-alia relates to cancellation, termination or short-closure of the Contract by BHEL.

2.21.2 CONCILIATION:

If at any time (whether before, during or after the arbitral or judicial proceedings), any Disputes (which term shall mean and include any dispute, difference, question or disagreement arising in connection with construction, meaning, operation, effect, interpretation or breach of the agreement, contract), which the Parties are unable to settle mutually, arise inter-se the Parties, the same may, be referred by either party to Conciliation to be conducted through Independent Experts Committee (IEC) to be appointed by competent authority of BHEL from the BHEL Panel of Conciliators.

Notes:

1. No serving or a retired employee of BHEL/Administrative Ministry of BHEL shall be included in the BHEL Panel of Conciliators.

2. Any other person(s) can be appointed as Conciliator(s) who is/are mutually agreeable to both the parties from outside the BHEL Panel of Conciliators.

The proceedings of Conciliation shall broadly be governed by Part-III of the Arbitration and Conciliation Act 1996 or any statutory modification thereof and as provided in Procedure 2.3 to this GCC. The Procedure 2.3 together with its Formats will be treated as if the same is part and parcel hereof and shall be as effectual as if set out herein in this GCC.

The Contractor hereby agrees that BHEL may make any amendments or modifications to the provisions stipulated in the Procedure 2.3 to this GCC from time to time and confirms that it shall be bound by such amended or modified provisions of the Procedure 2.3 with effect from the date as intimated by BHEL to it.

2.21.3 No Interest payable to Contractor

Notwithstanding anything to the contrary contained in any other document comprising in the Contract, no interest shall be payable by BHEL to Contractor on any moneys or balances including but not limited to the Security Deposit, EMD, Retention Money, RA Bills or the Final Bill, or any amount withheld and/or appropriated by BHEL etc., which becomes or as the case may be, is adjudged to be due from BHEL to Contractor whether under the Contract or otherwise.

14. Clause no. 2.7.2 and 2.7.3 of Volume-IB-GCC shall be revised as follows:

2.7.2.1 To terminate the contract or withdraw portion of work and get it done through other agency, at the

risk and cost of the contractor after due notice of a period of 14 days' by BHEL in any of the following cases:

i). Contractor's poor progress of the work vis-à-vis execution timeline as stipulated in the Contract, backlog attributable to contractor including unexecuted portion of work does not appear to be executable within balance available period considering its performance of execution.
ii). Withdrawal from or abandonment of the work by contractor before completion of the work as per contract.
iii). Non-completion of work by the Contractor within scheduled completion period as per Contract or as extended from time to time, for the reasons attributable to the contractor.
iv). Termination of Contract on account of any other reason (s) attributable to Contractor.
v). Assignment, transfer, subletting of Contract without BHEL's written permission.
vi). Non-compliance to any contractual condition or any other default attributable to Contractor.

Risk & Cost Amount against Balance Work:

Risk & Cost amount against balance work shall be calculated as follows: Risk & Cost Amount= [(A-B) + (A x H/100)]
Where,
A= Value of Balance scope of Work (*) as per rates of new contract
B= Value of Balance scope of Work (*) as per rates of old contract being paid to the contractor at the time of termination of contract i.e. inclusive of PVC & ORC, if any.
H = Overhead Factor to be taken as 5

In case (A-B) is less than 0 (zero), value of (A-B) shall be taken as 0 (zero).

* Balance scope of work (in case of termination of contract):
Difference of Contract Quantities and Executed Quantities as on the date of issue of Letter for 'Termination of Contract', shall be taken as balance scope of Work for calculating risk & cost amount. Contract quantities are the quantities as per original contract. If, Contract has been amended, quantities as per amended Contract shall be considered as Contract Quantities.
Items for which total quantities to be executed have exceeded the Contract Quantities based on drawings issued to contractor from time to time till issue of Termination letter, then for these items total Quantities as per issued drawings would be deemed to be contract quantities.
Substitute/ extra items whose rates have already been approved would form part of contract quantities for this purpose. Substitute/ extra items which have been executed but rates have not been approved, would also form part of contract quantities for this purpose and rates of such items shall be determined in line with contractual provisions.
However, increase in quantities on account of additional scope in new tender shall not be considered for this purpose.

NOTE: Incase portion of work is being withdrawn at risk & cost of contractor instead of termination of contract, contract quantities pertaining to portion of work withdrawn shall be considered as 'Balance scope of work' for calculating Risk & Cost amount.

LD against delay in executed work in case of Termination of Contract:

LD against delay in executed work shall be calculated in line with LD clause no. 2.7.9 of GCC, for the delay attributable to contractor. For limiting the maximum value of LD, contract value shall be taken as Executed Value of work till termination of contract.

Method for calculation of "LD against delay in executed work in case of termination of contract" is given below.

i). Let the time period from scheduled date of start of work till termination of contract excluding the period of Hold (if any) not attributable to contractor = T1

ii) Let the value of executed work till the time of termination of contract= X

iii) Let the Total Executable Value of work for which inputs/fronts were made available to contractor and were planned for execution till termination of contract = Y

iv) Delay in executed work attributable to contractor i.e. T2=[1-(X/Y)] x T1

v) LD shall be calculated in line with LD clause (clause 2.7.9) of the Contract for the delay attributable to contractor taking "X" as Contract Value and "T2" as period of delay attributable to contractor.

2.7.2.2 In case Contractor fails to deploy the resources as per requirement, BHEL can deploy own/hired/otherwise arranged resources at the risk and cost of the contractor and recover the expenses incurred from the dues payable to contractor. Recoveries shall be actual expenses incurred plus 5% overheads or as defined in TCC.

2.7.3 Recoveries arising out of Risk & Cost and LD or any other recoveries due from Contractor

Following sequence shall be applicable for recoveries from contractor:

a) Dues available in the form of Bills payable to contractor, SD, BGs against the same contract.

b) Demand notice for deposit of balance recovery amount shall be sent to contractor, if funds are insufficient to effect complete recovery against dues indicated in (a) above.

c) If contractor fails to deposit the balance amount to be recovered within the period as prescribed in demand notice, following action shall be taken for balance recovery:

i) Dues payable to contractor against other contracts in the same Region shall be considered for recovery.

ii) If recovery cannot be made out of dues payable to the contractor as above, balance amount to be recovered, shall be informed to other Regions/Units for making recovery from the Unpaid Bills/Running Bills/SD/BGs/Final Bills of contractor.

iii) In-case recoveries are not possible with any of the above available options, Legal action shall be initiated for recovery against contractor.

15. Clause 2.24 of GCC (Performance Guarantee for Workmanship)

Term "Special Conditions of Contract" appearing in 3rdline of the current clause 2.24.1,is replaced by "Technical Conditions of Contract"

16. Clause 4.2.1.7 of Special Condition of Contract (SCC)

At the end of Clause 4.2.1.7 (i.e. after the line "Decision of BHEL shall be final and binding on the contractor") following para is to be added

"It is not obligatory on the part of BHEL to provide any tools and tackles or other materials other than those specifically agreed to do so by BHEL. However, depending upon the availability, BHEL /BHEL's Customer handling equipment and other plants may be made available to the contractor on payment of hire charges as fixed, subject to the conditions laid down by BHEL/Customer from time to time. Unless paid in advance, such hire charges, if applicable, shall be recovered from contractor's bill / security deposit or any other due payment in one installment."

17. Clause 9.61 of SCC (NON-COMPLIANCE)

Under NON-COMPLIANCE, at the end of Clause 9.61 (i.e. after the line "Also the amount will be spent for purchasing the safety appliances and supporting the safety activity at site.") following para is to be added:

"In case of any financial deduction made by Customer for lapses of safety other than what is provided above or elsewhere in the contract, the same shall be charged on back-to-back basis on the defaulting contractor without prejudice to any other right spelt anywhere in the tender / contract"

18. Clause 9.1 & 9.2 to 9.62 of SCC (HSE & OHSAS Obligations)

Cl. no. 9.0	No change
Cl. no. 9.1	HSE (Health, safety & Environment): Contractor will comply with HSE (Health, safety & Environment) requirements of BHEL as per "HSE Plan for Site Operations by Sub-contractors" (Document no. HSEP:14, Rev.00) attached with this tender.
Cl. no. 9.2 to 9.62	Deleted

Annexure -B

Terms & Conditions of Reverse Auction

Against this enquiry for the subject item/ system with detailed scope of supply/service as per tender specifications, BHEL shall be resorting to "REVERSE AUCTION PROCEDURE" i.e., ON LINE BIDDING (THROUGH A SERVICE PROVIDER). The philosophy followed for reverse auction shall be English Reverse (No ties).

1. For the proposed reverse auction, technically and commercially acceptable bidders only shall be eligible to participate.
2. Price bids of all techno-commercially qualified bidders shall be opened and same shall be considered as initial bids of bidders in RA.
3. BHEL will engage the services of a service provider who will provide all necessary training and assistance before commencement of on line bidding on internet.
4. In case of reverse auction, BHEL will inform the bidders the details of Service Provider to enable them to contact & get trained for participation in the reverse auction.
5. Business rules like event date, time, bid decrement, extension etc. also will be communicated through service provider for compliance.
6. Bidders have to fax /e-mail the Compliance form (annexure III) before start of Reverse auction. Without this, the bidder will not be eligible to participate in the event.
7. In line with the NIT terms, BHEL will provide the calculation sheet (e.g., EXCEL sheet) which will help to arrive at "Total Cost to BHEL" which is inclusive of all cost elements in line with terms & conditions of the tender for each of the bidder to enable them to fill-in the price and keep it ready for keying in during the Auction.
8. Reverse auction will be conducted on scheduled date & time.
9. At the end of Reverse Auction event, the lowest bidder value will be known on auction portal.
10. The lowest bidder has to fax/e-mail the duly signed and filled-in prescribed format for price breakup including that of line items, if required, (Annexure IV) as provided on case-to-case basis to Service provider within two working days of Auction without fail.
11. Bidders shall be required to read the "Terms and Conditions" section of the auctions site of Service provider, using the Login IDs and passwords given to them by the service provider before reverse auction event. Bidders should acquaint themselves of the "Business Rules of Reverse Auction", which will be communicated before the Reverse Auction.
12. If the Bidder or any of his representatives are found to be involved in Price manipulation/ cartel formation of any kind, directly or indirectly by communicating with other bidders, action *as per extant BHEL guidelines*, shall be initiated by BHEL and the results of the RA scrapped/ aborted.
13. The Bidder shall not divulge either his Bids or any other exclusive details of BHEL to any other party.
14. In case of more than four techno commercially qualified bidders, H1 bidder (whose quote is highest in sealed envelope price bid) shall not be allowed to participate in RA. However, there will be no H1 removal in case H1 happens to be MSE or qualifying under PPP-MII, Order 2017 irrespective of the number of bidders qualifying techno-commercially. In case of multiple H1 bidders, all H1 bidders (excluding MSEs and bidders qualifying under PPP-MII, Order 2017) shall be removed provided minimum three bidders remain in fray, else no H1 removal.

Annexure -C

Certificate by Chartered Accountant on letter head

This is to to Certify that M/S ....., (hereinafter referred to as 'company') having its registered office at ..... is registered under MSMED Act 2006, (Entrepreneur Memorandum No (Part-II) ..... dtd:....., Category:..... (Micro/Small)). (Copy enclosed).

Further verified from the Books of Accounts that the investment of the company as per the latest audited financial year ..... as per MSMED Act 2006 is as follows:

1. **For Manufacturing Enterprises:** Investment in plant and machinery (i.e. original cost **excluding land and building and the items specified by the Ministry of Small Scale Industries vide its** notification No.S.0.1722(E) dated October 5, 2006 :
   Rs.....Lacs
2. **For Service Enterprises:** Investment in equipment (original cost excluding land and building and **furniture, fittings and other items not direCtly related to the service rendered or as may be notified under the MSMED** Act, 2006:
   Rs.....Lacs

(Strike off whichever is not applicable)

The above investment of Rs.....Lacs is within permissible limit of Rs.....Lacs for .....Micro / Small (Strike off which is not applicable) Category under MSMED Act 2006.

Or

The company has been graduated from its original category {Micro/ Small) (Strike off which is not applicable) and the date of graduation of such enterprise from its original category is ..... (dd/mm/yyyy) which is within the period of 3 years from the date of graduation of such enterprise from its original category as notified vide S.O. No. 3322(E) dated 01.11.2013 published in the gazette notification dated 04.11.2013 by Ministry of MSME.

Date:

(Signature)

Name-

Membership number-

Seal of Chartered Accountant

Annexure –D

Specific Clause w.r.t. BOCW Act & Cess Act

1. It shall be the sole responsibility of the contractor as employer to ensure compliance of all the statutory obligations under the Building and other Construction Workers' (Regulation of Employment and Conditions of Service) Act, 1996 and the Building and other Construction Workers' Welfare Cess Act, 1996 and the rules made thereunder.
2. It shall be sole responsibility of the contractor engaging Building Workers in connection with the building or other construction works in the capacity of employer to apply and obtain registration certificate specifying the scope of work under the relevant provisions of the Building and Other Construction Workers' (Regulation of Employment and Conditions of Service) Act, 1996 from the appropriate Authorities.
3. It shall be responsibility of the contractor to furnish a copy of such Registration Certificate within a period of one month from the date of commencement of Work.
4. It is responsibility of the contractor to register under the Building and other Construction Workers' Welfare Cess Act, 1996 and deposit the required Cess for the purposes of the Building and other Construction Workers' (Regulation of Employment and Conditions of Service) Act, 1996 at such rate as the Central Government may , by notification in the Official Gazette, from time to time specify. However, before registering and deposit of Cess under the Building and other Construction Workers' Welfare Cess Act, 1996, the contractor will seek written prior approval from the Construction Manager.
5. In case where the contractor has been accorded written approval by the Construction Manager and the contractor is required to furnish information in Form I and deposit the Cess under the Building and other Construction Workers' Welfare Cess Act, 1996, fails to do so, BHEL reserves right to impose penalty at the rate of 30% of Cess Amount.
6. It shall be sole responsibility of the contractor as employer to get registered every Building Worker, who is between the age of 18 to 60 years of age and who has been engaged in any building or other construction work for not less than ninety days during the preceding twelve months as Beneficiary under the Building and other Construction Workers' (Regulation of Employment and Conditions of Service) Act, 1996.
7. It shall be sole responsibility of the contractor as employer to maintain all the registers, records, notices and submit returns under the Building and other Construction Workers' (Regulation of Employment and Conditions of Service) Act, 1996 and the Building and other Construction Workers' Welfare Cess Act, 1996 and the rules made thereunder.
8. It shall be sole responsibility of the contractor as employer to provide notice of poisoning or occupation notifiable diseases, to report of accident and dangerous occurrences to the concerned authorities under the Building and other Construction Workers' (Regulation of Employment and Conditions of Service) Act, 1996 and the rules made thereunder and to make payment of all statutory payments & compensation under the Employees' Compensation Act, 1923.
9. It shall be responsibility of the Contractor to furnish BHEL on monthly basis, Receipts/ Challans towards Deposit of the Cess under the Building and other Construction Workers' Welfare Cess Act, 1996 and the rules made thereunder along with following statistics :
    (i) Number of Building Workers employed during preceding one month.
    (ii) Number of Building workers registered as Beneficiary during preceding one month.
    (iii) Disbursement of Wages made to the Building Workers for preceding wage month.
    (iv) Remittance of Contribution of Beneficiaries made during the preceding month
10. BHEL shall reimburse the contractor the Cess amount deposited for the purposes of the Building and other Construction Workers' (Regulation of Employment and Conditions of Service) Act, 1996 under the Building and other Construction Workers' Welfare Cess Act, 1996 and the rules made thereunder. However, BHEL shall not reimburse the Fee paid towards the registration of establishment, fees paid towards registration of Beneficiaries and Contribution of Beneficiaries remitted.
11. It shall be responsibility of the Building Worker engaged by the Contractor and registered as a beneficiary under the Building and other Construction Workers' (Regulation of Employment and Conditions of Service) Act, 1996 to contribute to the Fund at such rate per mensem as may be specified by the State government

by notification in the Official Gazette. Where such beneficiary authorizes the contractor being his employer to deduct his contribution from his monthly wages and to remit the same, the contractor shall remit such contribution to the Building and other construction Workers' Welfare Board in such manner as may be directed by the Board , within the fifteen days from such deduction.

12. If any point of time during the contract period, non-compliance of the provisions of the Building and other Construction Workers' (Regulation of Employment and Conditions of Service) Act, 1996 and the Building and other Construction Workers' Welfare Cess Act, 1996 and the rules made thereunder is observed, BHEL reserves the right to withhold a reasonable amount from the payables to discharge any obligations on behalf of Contractors. The reasonable amount shall be decided by the Construction Manager in consultation with Resident Accounts Officer & Head HR and shall be final.

13. The contractor shall declare to undertake any liability or claim arising out of employment of building workers and shall indemnify BHEL from all consequences / liabilities / penalties in case of non compliance of the provisions of the Building and other Construction Workers' (Regulation of Employment and Conditions of Service) Act, 1996 and the Building and other Construction Workers' Welfare Cess Act, 1996 and the rules made thereunder.

ANNEXURE-E

Statewise GST Registration nos.

Sl. No.	State / UT	GST Reg. No.
1	Andhra Pradesh	37AAACB4146P7Z8
2	Assam	18AAACB4146P1ZE
3	Bihar	10AAACB4146P1ZU
4	Chandigarh	04AAACB4146P1ZN
5	Chattishgarh	22AAACB4146P1ZP
6	Daman & Diu	25AAACB4146P1ZJ
7	Delhi	07AAACB4146P1ZH
8	Gujarat	24AAACB4146P1ZL
9	Haryana	06AAACB4146P1ZJ
10	HP	02AAACB4146P1ZR
11	Jharkhand	20AAACB4146P5ZP
12	Karnataka	29AAACB4146P1ZB
13	Kerala	32AAACB4146P1ZO
14	Maharashtra	27AAACB4146P1ZF
15	MP	23AAACB4146P1ZN
16	Punjab	03AAACB4146P2ZO
17	Rajasthan	08AAACB4146P1ZF
18	Tamil Nadu	33AAACB4146P2ZL
19	Telangana	36AAACB4146P1ZG
20	Tripura	16AAACB4146P1ZI
21	UP	09AAACB4146P2ZC
22	Uttarakhand	05AAACB4146P1ZL
23	West Bangal	19AAACB4146P1ZC
24	Mizoram	15AAACB4146P1ZK
25	Orissa	21AAACB4146P1ZR
26	Arunachal Pradesh	12AAACB4146P1ZQ

Annexure- CPP-GST/I

Please arrange to submit this filled-up format along with Tender

Name of the Company	
Address of Company*	
Company Registration Number*	
Name of Partners / Directors	
ALL THE STATES WHERE BIDDER HAS A PLACE OF BUSINESS*	
ALL ADDRESS OF VENDOR MENTIONING THEIR PIN AS PER THE LATEST GST REGISTRATION*	
GSTN OF ALL THE ABOVE NOTED PLACES OF VENDOR*	
Bidder Type: Indian/ Foreign*	
City*	
State*	
Country*	
Postal Code*	
PAN/TAN Number*	
Company's Establishment Year	
Company's Nature of Business*	
Company's Legal Status* {limited /undertaking/joint venture/partnership/other}	
Company Category* {micro unit as per MSME/small unit as per MSME/medium unit as per MSME/ UAN as per Udyog Aadhaar Memorandum/ Ancillary unit/project affected person of this company/ssi/ other} Relevant documents to be submitted as applicable.	
Enter Company's Contact Person Details	
Title(Mr. / Mrs. / Ms. / Dr. / Shri)*	
Contact Name*	
Date Of Birth*	
Correspondence Email*	
(Correspondence Email ID can be same	
as your Login ID. All the mail correspondence	
will be sent only to the Correspondence Email ID.)	
Designation	
Phone*	
Fax*	
Mobile*	

INTEGRITY PACT

Between

Bharat Heavy Electricals Ltd. (BHEL), a company registered under the Companies Act 1956 and having its registered office at "BHEL House", Siri Fort, New Delhi - 110049 (India) hereinafter referred to as "The Principal", which expression unless repugnant to the context or meaning hereof shall include its successors or assigns of the ONE PART

and

_____, (description of the party along with address), hereinafter referred to as "The Bidder/ Contractor" which expression unless repugnant to the context or meaning hereof shall include its successors or assigns of the OTHER PART

Preamble

The Principal intends to award, under laid-down organizational procedures, contract/s for _____ _____ _____ . The Principal values full compliance with all relevant laws of the land, rules and regulations, and the principles of economic use of resources, and of fairness and transparency in its relations with its Bidder(s)/ Contractor(s).

In order to achieve these goals, the Principal will appoint Independent External Monitor(s), who will monitor the tender process and the execution of the contract for compliance with the principles mentioned above.

Section 1- Commitments of the Principal

1.1 The Principal commits itself to take all measures necessary to prevent corruption and to observe the following principles:-

1.1.1 No employee of the Principal, personally or through family members, will in connection with the tender for, or the execution of a contract, demand, take a promise for or accept, for self or third person, any material or immaterial benefit which the person is not legally entitled to.

1.1.2 The Principal will, during the tender process treat all Bidder(s) with equity and reason. The Principal will in particular, before and during the tender process, provide to all Bidder(s) the same information and will not provide to any Bidder(s) confidential/ additional information through which the Bidder(s) could obtain an advantage in relation to the tender process or the contract execution.

1.1.3 The Principal will exclude from the process all known prejudiced persons.

1.2 If the Principal obtains information on the conduct of any of its employees which is a penal offence under the Indian Penal Code 1860 and Prevention of Corruption Act 1988 or any other statutory penal enactment, or if there be a substantive suspicion in this regard, the Principal will inform its Vigilance Office and in addition can initiate disciplinary actions:

Section 2 - Commitments of the Bidder(s)/ Contractor(s)

2.1 The Bidder(s)/ Contractor(s) commit himself to take all measures necessary to prevent corruption. He commits himself to observe the following principles during his participation in the tender process and during the contract execution.

2.1.1 The Bidder(s)/ Contractor(s) will not, directly or through any other person or firm, offer, promise or give to the Principal or to any of the Principal's employees involved in the tender process or the execution of the contract or to any third person any material, immaterial or any other benefit which he/ she is not legally entitled to, in order to obtain in exchange any advantage of any kind whatsoever during the tender process or during the execution of the contract.

2.1.2 The Bidder(s)/ Contractor(s) will not enter with other Bidder(s) into any illegal or undisclosed agreement or understanding, whether formal or informal. This applies in particular to prices, specifications, certifications, subsidiary contracts, submission or non-submission of bids or any other actions to restrict competitiveness or to introduce cartelization in the bidding process.

2.1.3 The Bidder(s)/ Contractor(s) will not commit any penal offence under the relevant Indian Penal Code (IPC) and Prevention of Corruption Act; further the Bidder(s)/ Contractor(s) will not use improperly, for purposes of competition or personal gain, or pass on to others, any information or document provided by the Principal as part of the business relationship, regarding plans, technical proposals and business details, including information contained or transmitted electronically.

2.1.4 Foreign Bidder(s)/ Contractor(s) shall disclose the name and address of agents and representatives in India and Indian Bidder(s)/ Contractor(s) to disclose their foreign principals or associates. The Bidder(s)/ Contractor(s) will, when presenting his bid, disclose any and all payments he has made, and is committed to or intends to make to agents, brokers or any other intermediaries in connection with the award of the contract.

2.2 The Bidder(s)/ Contractor(s) will not instigate third persons to commit offences outlined above or be an accessory to such offences.

2.3 The Bidder(s)/ Contractor(s) shall not approach the Courts while representing the matters to IEMs and will await their decision in the matter.

Section 3 - Disqualification from tender process and exclusion from future contracts

If the Bidder(s)/ Contractor(s), before award or during execution has committed a transgression through a violation of Section 2 above, or acts in any other manner such as to put his reliability or credibility in question, the Principal is entitled to disqualify the Bidder(s)/ Contractor(s) from the tender process or take action as per the separate "Guidelines on Banning of Business dealings with Suppliers/ Contractors", framed by the Principal.

Section 4 - Compensation for Damages

4.1 If the Principal has disqualified the Bidder from the tender process prior to the award according to Section 3, the Principal is entitled to demand and recover the damages equivalent Earnest Money Deposit/ Bid Security.

4.2 If the Principal has terminated the contract according to Section 3, or if the Principal is entitled to terminate the contract according to section 3, the Principal shall be entitled to

demand and recover from the Contractor liquidated damages equivalent to 5% of the contract value or the amount equivalent to Security Deposit/ Performance Bank Guarantee, whichever is higher.

Section 5 - Previous Transgression

5.1 The Bidder declares that no previous transgressions occurred in the last 3 years with any other company in any country conforming to the anti-corruption approach or with any other Public Sector Enterprise in India that could justify his exclusion from the tender process.

5.2 If the Bidder makes incorrect statement on this subject, he can be disqualified from the tender process or the contract, if already awarded, can be terminated for such reason.

Section 6 - Equal treatment of all Bidders/ Contractors / Sub-contractors

6.1 The Principal will enter into agreements with identical conditions as this one with all Bidders and Contractors. In case of sub-contracting, the Principal contractor shall be responsible for the adoption of IP by his sub-contractors and shall continue to remain responsible for any default by his sub-contractors.

6.2 The Principal will disqualify from the tender process all bidders who do not sign this pact or violate its provisions.

Section 7 - Criminal Charges against violating Bidders/ Contractors /Subcontractors

If the Principal obtains knowledge of conduct of a Bidder, Contractor or Subcontractor, or of an employee or a representative or an associate of a Bidder, Contractor or Subcontractor which constitutes corruption, or if the Principal has substantive suspicion in this regard, the Principal will inform the Vigilance Office.

Section 8 - Independent External Monitor(s)

8.1 The Principal appoints competent and credible Independent External Monitor for this Pact. The task of the Monitor is to review independently and objectively, whether and to what extent the parties comply with the obligations under this agreement.

8.2 The Monitor is not subject to instructions by the representatives of the parties and performs his functions neutrally and independently. He reports to the CMD, BHEL.

8.3 The Bidder(s)/ Contractor(s) accepts that the Monitor has the right to access without restriction to all contract documentation of the Principal including that provided by the Bidder(s)/ Contractor(s). The Bidder(s)/ Contractor(s) will grant the monitor, upon his request and demonstration of a valid interest, unrestricted and unconditional access to his contract documentation. The same is applicable to Sub-contractor(s). The Monitor is under contractual obligation to treat the information and documents of the Bidder(s)/ Contractor(s) / Sub-contractor(s) with confidentiality in line with Non- disclosure agreement.

8.4 The Principal will provide to the Monitor sufficient information about all meetings among the parties related to the contract provided such meetings could have an impact on the contractual relations between the Principal and the Contractor. The parties offer to the Monitor the option to participate in such meetings.

8.5 The role of IEMs is advisory, would not be legally binding and it is restricted to resolving issues raised by an intending bidder regarding any aspect of the tender which allegedly restricts competition or bias towards some bidders. At the same time, it must be understood that IEMs are not consultants to the Management. Their role is independent in nature and the advice once tendered would not be subject to review at the request of the organization.

8.6 For ensuring the desired transparency and objectivity in dealing with the complaints arising out of any tendering process, the matter should be examined by the full panel of IEMs jointly as far as possible, who would look into the records, conduct an investigation, and submit their joint recommendations to the Management.

8.7 The IEMs would examine all complaints received by them and give their recommendations/ views to CMD, BHEL, at the earliest. They may also send their report directly to the CVO and the Commission, in case of suspicion of serious irregularities requiring legal/ administrative action. IEMs will tender their advice on the complaints within 10 days as far as possible.

8.8 The CMD, BHEL shall decide the compensation to be paid to the Monitor and its terms and conditions.

8.9 IEM should examine the process integrity, they are not expected to concern themselves with fixing of responsibility of officers. Complaints alleging mala fide on the part of any officer of the organization should be looked into by the CVO of the concerned organisation.

8.10 If the Monitor has reported to the CMD, BHEL, a substantiated suspicion of an offence under relevant Indian Penal Code/ Prevention of Corruption Act, and the CMD, BHEL has not, within reasonable time, taken visible action to proceed against such offence or reported it to the Vigilance Office, the Monitor may also transmit this information directly to the Central Vigilance Commissioner, Government of India.

8.11 The number of Independent External Monitor(s) shall be decided by the CMD, BHEL.

8.12 The word 'Monitor' would include both singular and plural.

Section 9 - Pact Duration

9.1 This Pact shall be operative from the date IP is signed by both the parties till the final completion of contract for successful bidder and for all other bidders 6 months after the contract has been awarded. Issues like warranty / guarantee etc. should be outside the purview of IEMs.

9.2 If any claim is made/ lodged during currency of IP, the same shall be binding and continue to be valid despite the lapse of this pact as specified above, unless it is discharged/ determined by the CMD, BHEL.

Section 10 - Other Provisions

10.1 This agreement is subject to Indian Laws and jurisdiction shall be registered office of the Principal, i.e. New Delhi.

10.2 Changes and supplements as well as termination notices need to be made in writing. Side agreements have not been made.

10.3 If the Contractor is a partnership or a consortium, this agreement must be signed by all partners or consortium members.

10.4 Should one or several provisions of this agreement turn out to be invalid, the remainder of this agreement remains valid. In this case, the parties will strive to come to an agreement to their original intentions.

10.5 Only those bidders / contractors who have entered into this agreement with the Principal would be competent to participate in the bidding. In other words, entering into this agreement would be a preliminary qualification.

For & On behalf of the Principal

(Office Seal)

For & On behalf of the Bidder/ Contractor

(Office Seal)

Place----------

Date----------

Witness:_____

(Name & Address) _____

_____

Witness:_____

(Name & Address) _____

_____

सुब्रत सेन / Subrata Sen
महाप्रबंधक (उप संविदा) / Addl. General Manager (Sub Contract)
बी. एच. ई. एल. / पी.एस.ई.आर / BHEL / PSER
डी जे - 9/1, सॉल्ट लेक / DJ-9/1, SALT LAKE
कोलकाता-700 091 / KOLKATA-700 091

NTPC Limited

(A Government of India Enterprise)

NORTH KARANPURA SUPER THERMAL POWER PRO□ECT (□□□□0MW)

PART – A

TECHNICAL SPECIFICATIONS

SECTION – VI

FOR

FLUE GAS DESULPHURISATION (FGD) SYSTEM PACKAGE

BIDDING DOCUMENT NO.: CS-4410-10□-2

NTPC Limited

(A Government of India Enterprise)

NORTH KARANPURA SUPER THERMAL POWER PRO□ECT (□□□□0MW)

PART - A

TECHNICAL SPECIFICATIONS

SECTION – VI

FOR

FLUE GAS DESULPHURISATION (FGD) SYSTEM PACKAGE

BIDDING DOCUMENT NO.: CS-4410-10□-2

(This document is meant for the exclusive purpose of bidding against this Package and shall not be transferred, reproduced or otherwise used for purposes other than that for which it is specifically issued).

CLAUSE NO.	CONTENTS

NORTH KARANPURA SUPER THERMAL POWER PRO□ECT (□ □ □□0 MW)
SECTION - □I
TECHNICAL SPECIFICATION
FOR
FLUE GAS DESULPHURISATION (FGD) SYSTEM PACKAGE
THE TECHNICAL SPECIFICATION□SECTION - □I COMPRISE OF THE FOLLOWING PARTS

PART □A

SUB-SECTION-I	INTENT OF SPECIFICATION
SUB-SECTION-II	PROJECT INFORMATION
SUB-SECTION-III	SCOPE OF SUPPLY & SERVICES
SUB-SECTION-III-A	MECHANICAL EQUIPMENTS & SYSTEMS
SUB-SECTION-III-A1	FLUE GAS DESULPHURISATION SYSTEM
SUB-SECTION-III-A2	LIME STONE & GYPSUM HANDLING SYSTEM
SUB-SECTION-III-A3	PLANT UTILITIES
SUB-SECTION-III-A4	ECW SYSTEM
SUB-SECTION-III-B	ELECTRICAL SYSTEM/EQUIPMENT
SUB-SECTION-III-C	CONTROL AND INSTRUMENTATION SYSTEM
SUB-SECTION-III-D	CIVIL WORKS
SUB-SECTION-IV	TERMINAL POINTS & EXCLUSIONS
SUB-SECTION-V	SALIENT DESIGN DATA
SUB-SECTION-VI	FUNCTIONAL GUARANTEES & LIQUIDATED DAMAGES
SUB-SECTION-VII	MANDATORY SPARES

PART □B (DETAILED TECHNICAL SPECIFICATION)

SUB-SECTION-I-M (MECHANICAL SYSTEM)

SUB-SECTION-I-M1	FLUE GAS DESULPHURISATION SYSTEM
SUB-SECTION-I-M2	LIME STONE & GYPSUM HANDLING SYSTEM
SUB-SECTION-I-M3	AIR CONDITIONING & VENTILATION SYSTEM
SUB-SECTION-I-M4	FIRE DETECTION & PROTECTION SYSTEM

SUB-SECTION-I-M5 ECW SYSTEM

SUB-SECTION-I-M6 PIPING

SUB-SECTION-I-M7 MDL

PART □B (DETAILED TECHNICAL SPECIFICATION)

SUB-SECTION-II-E (ELECTRICAL SYSTEM)

SUB-SECTION-II-E1 GENERAL ELECTRICAL SPECIFICATION

SUB-SECTION-II-E2 MOTORS

SUB-SECTION-II-E3 MEDIUM VOLTAGE BUSDUCTS

SUB-SECTION-II-E4 LT POWER CABLES

SUB-SECTION-II-E5 LT CONTROL CABLES

SUB-SECTION-II-E6 CABLING EARTHING & LIGHTNING PROTECTION

SUB-SECTION-II-E7 HT POWER CABLES

SUB-SECTION-II-E8 ELECTRIC ACTUATORS WITH INTEGRAL STARTERS

SUB-SECTION-II-E9 HT SWITCHGEAR

SUB-SECTION-II-E10 LT SWITCHGEARS & BUSDUCTS

SUB-SECTION-II-E11 DG SETS

SUB-SECTION-II-E12 OUTDOOR TRANSFORMERS

SUB-SECTION-II-E13 ELEVATORS ELECTRICALS

SUB-SECTION-II-E14 FIRE PROOF CABLE PENETRATION SEALING SYSTEM

SUB-SECTION-II-E15 STATION LIGHTING

SUB-SECTION-II-E16 BATTERY

SUB-SECTION-II-E17 BATTERY CHARGER

CLAUSE NO.	CONTENTS

PART □B (DETAILED TECHNICAL SPECIFICATION)

SUB-SECTION-III-C (CONTROL □ INSTRUMENTATION SYSTEM)

SUB-SECTION-III-C1	BASIC DESIGN CRITERIA
SUB-SECTION-III-C2	MEASURING INSTRUMENTS (PRIMARY AND SECONDARY)
SUB-SECTION-III-C3	PROCESS CONNECTION AND PIPING
SUB-SECTION-III-C4	INSTRUMENTATION CABLES
SUB-SECTION-III-C5	PLC BASED CONTROL SYSTEM
SUB-SECTION-III-C6	TYPE TEST REQUIREMENTS
SUB-SECTION-III-C7	CONTROL VALVES, ACTUATORS & ACCESSORIES

PART □B (DETAILED TECHNICAL SPECIFICATION)

SUB-SECTION-I□-D (CI□IL WORKS)

SUB-SECTION-IV-D	CIVIL WORKS

PART □B (DETAILED TECHNICAL SPECIFICATION)

SUB-SECTION- □-Q (QUALITY ASSURANCE)

(MECHANICAL)

SUB-SECTION-V-QM1	FLUE GAS DESULPHURISATION SYSTEM
SUB-SECTION-V-QM2	LIMESTONE & GYPSUM HANDLING SYSTEM
SUB-SECTION-V-QM3	AIR CONDITION & VENTILATION SYSTEM

(ELECTRICAL)

SUB-SECTION-V-QE1	MOTORS
SUB-SECTION-V-QE2	LT SWITCHGEARS & BUSDUCTS
SUB-SECTION-V-QE3	LT POWER CABLES
SUB-SECTION-V-QE4	LT CONTROL CABLES
SUB-SECTION-V-QE5	CABLING EARTHING & LIGHTNING PROTECTION
SUB-SECTION-V-QE6	ELECTRIC ACTUATORS WITH INTEGRAL STARTERS
SUB-SECTION-V-QE7	STATION LIGHTING

SUB-SECTION-V-QE8 AUXILIARY TRANSFORMERS

SUB-SECTION-V-QE9 DG SET

SUB-SECTION-V-QE10 ELEVATOR

SUB-SECTION-V-QE11 HT CABLES

SUB-SECTION-V-QE12 HT SWITCHGEARS

SUB-SECTION-V-QE13 MEDIUM VOLTAGE BUSDUCT

SUB-SECTION-V-QE14 VFD MODULE

(CONTROL □ INSTRUMENTATION SYSTEM)

SUB-SECTION-V-QC1 MEASURING INSTRUMENTS (PRIMARY & SECONDARY

SUB-SECTION-V-QC2 PROCESS CONNECTION & PIPING

SUB-SECTION-V-QC3 INSTRUMENTATION CABLES

SUB-SECTION-V-QC4 CONTROL DESK PLC PANEL SMOKE DETECTOR FIRE ALARM & CONTROL SYSTEM

SUB-SECTION-V-QC5 POWER SUPPLY SYSTEM

(CI□IL WORKS)

SUB-SECTION-V-QD1

PART □B (DETAILED TECHNICAL SPECIFICATION)

SUB-SECTION- □I

PRE-COMMISSIONING ACTIVITIES, COMMISSIONING OF FACILITIES AND INITIAL OPERATIONS

PART - C

GENERAL CONDITIONS OF CONTRACT

PART - D

ERECTION CONDITIONS OF CONTRACTS

PART - E

LIST OF TENDER DRAWINGS

PART - F

ATTACHMENT-12 TO SECTION-VII (TECHNICAL DATA SHEETS)

PART - A

SUB-SECTION-I

INTENT OF SPECIFICATION

1.00.00 **INTENT OF SPECIFICATION**

1.01.00 **Scope of the proposal**

The scope of the proposal for Engineering, Supply, Construction, Erection, Testing & Commissioning works of Flue Gas Desulphurisation (FGD) System Package for Northkaranpura Super Thermal Power Project (3 x 660 MW) shall be on the basis of a single point responsibility, completely covering the following activities and services in respect of all the equipment specified and covered under the specifications and read in conjunction with "Scope of Supply & Services", Sub-section-III, Part-A, Section – VI of Technical Specification.

a) Basic Engineering of the plant including preparation of Plant Definition Manuals;

b) Detailed design of all the equipment and system(s) including civil, structure steel works included in bidder's scope.

c) Providing engineering drawings, equipment sizing & performance data, instruction manuals, as built drawings and other information;

d) Compliance with statutory requirements and obtaining clearances from statutory authorities, wherever required;

e) Complete manufacturing including shop testing/type testing;

f) Complete Civil, Structural and Architectural works, including survey, providing construction offices, field laboratory and construction equipments;

g) Packing and transportation from the manufacturer's works to the site including customs clearance & port clearance, port charges, if any.

h) Receipt, storage, preservation, handling and conservation of equipment at the site;

i) Fabrication, pre-assembly, if any, erection, testing, commissioning and completion of facilities including putting into satisfactory operation all the equipment including successful completion of initial operation;

j) Reliability tests, performance and guarantee tests after successful completion of facilities;

k) Furnishing of spares on FOR site basis;

l) Reconciliation with customs authorities, as required.

m) Satisfactory conclusion of the contract.

n) Insurance and other requirements for the complete FGD package in accordance with the provisions of general conditions of contract (Section-IV) of the bidding document.

1.02.00 The requirements, conditions, appendices etc. given in Technical Specifications (Section-VI, Parts A, B, C, D, E & F and shall apply to and shall be considered as a part of this volume as completely as if bound here with. The work to be carried out as per the above scope shall be all in accordance with the requirements, conditions, appendices, etc., stated in Section GCC, which shall be considered as a part of the Technical Specification (Section VI) as completely as if bound herewith. The Contractor shall be responsible for providing all material, equipment and service, which are required to fulfill the intent of ensuring operability, maintainability, reliability and complete safety of the complete work covered under this specification, irrespective of whether it has been specifically listed herein or not. It is not the intent to specify completely herein, all aspects of design and construction of equipment, nevertheless, the equipment shall conform in all aspects to high standards of engineering, design and workmanship and shall be capable of performing in continuous commercial operation, in a manner acceptable to the Employer, who will interpret the meaning of the specification, drawings and shall have a right to reject or accept any work or material which in his assessment is not complete to meet the requirements of this specification and/or applicable international standards mentioned elsewhere in the specification.

Bidders are requested to carefully examine and understand the specifications and seek clarifications, if required, to ensure that they have understood the specification. The Bidder's offer should not carry any sections like clarifications, interpretations and/or assumptions. In the event of conflict between the Technical Specifications and the Conditions of Contract, the requirements as indicated in the technical specification shall govern, unless confirmed otherwise by the Employer in writing before the award of this contract, based on a written request from the Bidder for such a clarification. However, if the Bidder feels that, in his opinion, certain features brought out in his offer are superior to what has been specified, these may be highlighted separately.

The Bidder may also make alternate offers provided, such offers are superior in his opinion, to the requirements of these specifications in which case, adequate technical information, operating feed back, etc., are to be enclosed with the offer, to enable the Employer to assess the superiority and reliability of the alternatives offered. In case of each alternative offer, its implications on the performance, guaranteed efficiency, auxiliary power consumption etc., shall be clearly brought out for the Employer to make an overall assessment. In any case, the base offer shall necessarily be in line with the specifications. Under no circumstances the specified equipment and services shall be brought out as an alternative offer.

	In case, all the above requirements are not complied with, the offer may be considered as incomplete and would become liable for rejection.
1.03.00	**The following are the equipment's covered in this specification:**
1.03.01	Wet limestone based Flue gas desulphurization(FGD) for 2X 800 MW unit, capable of reducing to the specified limits the emissions of Sulphur Dioxide in flue gas produced by specified coal being fired in boiler, complete with all accessories and auxiliary equipment's as per specification requirements including Absorber for each unit with Slurry re-circulation pumps & Oxidation blowers, common Limestone Grinding system, common Gypsum dewatering system.
1.03.02	One (1) number of elevator for each absorber and One (1) numbers of elevator for Limestone Grinding System building.
1.03.03	Buildings for Slurry re-circulation pumps/Oxidation blowers, Limestone Grinding System, Gypsum dewatering system & FGD control Room.
1.03.03	All motors, HT & LT Switchgears, DC System, Transformers, Electrical Actuators, HT & LT power & control cables, DG set (if applicable), cabling, lighting etc.
1.03.03	Associated Control & Instrumentation (C&I) equipments.
1.03.04	Associated Civil, Structural and Architectural works including foundation as specified in Technical Specification.
1.04.00	Wherever a material or article is specified or described by the name of a particular brand, manufacturer or vendor, the specific items mentioned shall be understood to be descriptive only and not restrictive. Such description indicates the equipment type, function and quality desired. Other manufacturer's products may be considered provided sufficient information so as to enable the Employer to determine that the products proposed are equivalent to those named.
2.00.00	**Additional Requirements**
	(a) Before submitting his bid, the Bidder should inspect and examine the site and its surroundings and should satisfy himself as to the nature of the ground and subsoil, the quantities and nature of work, materials necessary for completion of the work and their availability, means of access to site and in general shall himself obtain all necessary information as to risks, contingencies and other circumstances which may influence or affect his offer. No consequent extra claims on any misunderstanding or otherwise shall be allowed by the Employer.
	(b) Bidder shall take all necessary precautions to protect all the existing equipment, structures, facilities and buildings etc. from damage. In case any damage occurs due to the activities of the contractor on account of

negligence, ignorance, accidental or any other reason whatsoever, the damage shall be immediately made good by the contractor at his own cost to the satisfaction of the Employer. The contractor shall also take all necessary safety measures with specific reference to excavation in rock, at his own cost, to avoid any harm or injury to his workers and staff from the equipment and facilities of the power plant.

(c) For his site office and covered store buildings, the contractor shall adopt pre-engineered / pre-fabricated constructions made of steel with single / double skin, insulated or uninsulated roof and wall coverings (fabricated out of permanently color coated metal sheets). Alternatively, contractor can adopt readymade 'Porta cabin' or similar construction. Contractor shall ensure that all such constructions are well engineered, neatly constructed and overall present a pleasing look.

(d) In line with Gazette Notification on Ash Utilization issued by MOEF and its amendment thereafter, contractor shall use ash and ash based products in works as specified in these specifications, drawings and as per instructions of the Engineer. He shall also use ash and ash based products in construction of his offices, stores, staff quarters and labour huts etc. He shall furnish a compliance report along with all details of use of ash and ash based products along with each bill.

(e) Contractor shall establish/set up at site suitable repair facilities for construction plant, equipment and machinery (like piling rigs, cranes batching plant, dewatering pumps etc.) In case of piling rigs, cranes, batching plant etc. he will also make arrangements / tie up with equipment manufacturers / suppliers for periodic overhaul/maintenance and for major breakdown, if any. He shall also keep adequate stock of spares at site for various plant, equipment and machinery to meet day to day requirements as recommended by the equipment manufacturer/suppliers or as instructed by the Engineer. Contractor shall deploy dedicated qualified, full time mechanical/electrical foreman/supervisors for manning the repair facilities as specified above.

3.00.00 APPLICABLE DRAWINGS

The drawings listed below and forming part of the specification (Refer Part-E) shall supplement the requirements specified herein. The scope and terminal points of the equipment to be furnished under this steam generator package shall be as identified in these drawings and read in conjunction with text of the specification:

(A) LAYOUT & CIVIL DRAWINGS

(1) Layout Plan of FGD System : Drg No.: 4410-999-POC-F-001

(2) Equipment layout Plan : Drg No. : 4410-999-POM-F-001

(B) SCHEMES

Sl. No	Drawings Title	Drawings No.	Rev. No.	No. of Sheets
1)	Scheme of Absorber system	4410-109-POM-A-005	A	1
2)	Scheme of Limestone Milling system	4410-109-POM-A-006	A	1
3)	Scheme of Gypsum De-watering system	4410-109-POM-A-007	A	1

(C) CONTROL & INSTRUMENTATION

Sl. No.	Drawings Title	Drawings No.	No. of Sheets
1.	Standard configuration diagram for PLC	0000-151-POI-A-013	1
2.	G.A. of Junction Box	0000-999-POI-A-017	1
3.	Instrumentation cabling diagram grounding scheme for cabinets/panels/Power Supply	0000-999-POI-A-019A	2
4.	Scheme of 24V DC Power supply system	0000-999-POI-A-019B	1
5.	Scheme for Uninterruptible Power Supply System	0000-999-POI-A-019C	1
6.	Instrumentation/control/power supply cabling diagram	0000-101/102-POI-A-021	3
7.	Instrument Source Connection details	0000-999-POI-A-035	14
8.	Typical GA of Local Instrument Enclosure, purging scheme, DP transmitter	0000-999-POI-A-036	1
9.	Interfacing of actuators	0000-999-POI-A-063	1
10.	Interfacing of field instruments/Electrical interface/PLC Interface	0000-999-POI-A-065	15

(D) ELECTRICAL

(1)	Electrical single line diagram for FGD Package	:	Drg No. 4410-109-POE-J-004
(2)	Ladder type Cable Tray	:	Drg No. 0000-211-POE-A-001
(3)	Perforated type Cable Tray	:	Drg No. 0000-211-POE-A-002
(4)	Cable tray details Horizontal TEE	:	Drg No. 0000-211-POE-A-004
(5)	Cable tray 90 bends	:	Drg No. 0000-211-POE-A-005
(6)	Cable Tray 90 Vertical elbow (outside) 90 vertical elbow (inside)	:	Drg No. 0000-211-POE-A-006
(7)	Cable tray details cross	:	Drg No. 0000-211-POE-A-008
(8)	C1 & C2 Channel, Cable Tray Support System	:	Drg No. 0000-211-POE-A-013
(9)	Typical Details of Cable Tray Support System	:	Drg No. 0000-211-POE-A-014
(10)	Typical Details of Cable Tray Support System	:	Drg No. 0000-211-POE-A-015
(11)	Cantilever Arms	:	Drg No. 0000-211-POE-A-016
(12)	Typical Details of Cable Tray Support System	:	Drg No. 0000-211-POE-A-017
(13)	Typical Details of Cable Tray Support System	:	Drg No. 0000-211-POE-A-018
(14)	Fixing of Channel in Trench Wall	:	Drg No. 0000-211-POE-A-019
(15)	Bracket Floor Plate Light Duty	:	Drg No. 0000-211-POE-A-020
(16)	Bracket Floor Plate Heavy Duty	:	Drg No. 0000-211-POE-A-021
(17)	Bracket C1 Channel Clamp Heavy Duty & Bracket C2 Channel	:	Drg No. 0000-211-POE-A-022
(18)	Fixing of channel for trestle and trestle Bracket	:	Drg No. 0000-211-POE-A-022A
(19)	Bracket Right Angle & Bracket Right Angle Heavy Duty	:	Drg No. 0000-211-POE-A-023
(20)	Beam Clamp	:	Drg No. 0000-211-POE-A-024

(21)	Bracket C1 Channel Clamp	:	Drg No. 0000-211-POE-A-025
(22)	Bracket Beam Clamp	:	Drg No. 0000-211-POE-A-026
(23)	Standard cable support assembly	:	Drg No. 0000-211-POE-A-030
(24)	Standard cable support assembly	:	Drg No. 0000-211-POE-A-031
(25)	Standard cable support assembly	:	Drg No. 0000-211-POE-A-032
(26)	Standard cable support assembly	:	Drg No. 0000-211-POE-A-033
(27)	Standard cable support assembly	:	Drg No. 0000-211-POE-A-034
(28)	Standard cable support assembly	:	Drg No. 0000-211-POE-A-035
(29)	Typical interconnection details between two perpendicular trestles	:	Drg No. 0000-211-POE-A-035A
(30)	Typical details of structure for testing:		Drg No. 0000-211-POE-A-036
(31)	Typical details of structure for testing:		Drg No. 0000-211-POE-A-037
(32)	Typical details of structure for testing:		Drg No. 0000-211-POE-A-039
(33)	Typical drawing for junction box	:	Drg No. 0000-211-POE-A-040
(34)	Earthing details	:	Drg No. 0000-211-POE-A-041
(35)	Earthing details	:	Drg No. 0000-211-POE-A-042
(36)	Earthing details	:	Drg No. 0000-211-POE-A-043
(37)	Earthing details	:	Drg No. 0000-211-POE-A-044
(38)	Earthing details	:	Drg No. 0000-211-POE-A-045
(39)	Lightning Protection details	:	Drg No. 0000-211-POE-A-047
(40)	Lightning Protection details	:	Drg No. 0000-211-POE-A-048
(41)	Adaptor box for LT cables	:	Drg No. 0000-211-POE-A-048A
(42)	Buried cable trench details for lighitng:		Drg No. 0000-211-POE-A-049
(43)	Buried cable trenches for HT and LT cables	:	Drg No. 0000-211-POE-A-050
(44)	Typical Section of Cable Tray Arrangement in Trestle	:	Drg No. 9591-999-POE-J-004
(45)	MV busduct support structure types	:	Drg No. 0000-000-207-E-002
(46)	Interfacing of Actuators	:	Drg No. 0000-999-POI-A-063

Note : All the above drawings are indicative of Employer's requirements to enable the Bidder to make a suitable offer. All variations/alternations shall be clearly brought out in the technical deviation schedule with implications, if any. Such variations may be acceptable, after assessment of its implication and shall be subjected to the Employer's approval. However, the flexibility of operation and maintenance desired by the schemes and layouts shall be binding.

Electrical drawings (except Electrical single line diagram) are attached with respective Electrical Chapters in Part b, Section VI.

4.00.00 QUALIFYING REQUIREMENTS FOR EQUIPMENTS/SYSTEMS

4.01.01 **Provennesscriteria for critical equipment, auxiliaries, systems and bought out items:**

The Bidder / Bidder's sub-vendor(s) is required to meet the provenness criteria and/or qualification requirement for critical equipment, auxiliaries, system and bought out items as per criteria stipulated below:

4.01.02 Booster Fans, Slurry Recirculation Pumps, Oxidation Blowers, Wet Limestone Grinding Mills, Slurry Pumps, Agitators & Vacuum Belt Filters for the Wet Limestone based Flue Gas Desulphurisation (FGD) System offered by the Bidder shall be only from such manufacturer(s) who has previously designed (either by itself or under collaboration / licensing agreement), manufactured / got manufactured the respective equipment(s) of the type, application and minimum equipment rating as stipulated below such that the respective equipment(s) should have been in successful operation in at least one (1) plant for a period not less than one(1) year reckoned as on the date of consideration for approval but not later than six months to award date of contract to the Main bidder:

Type and Rating for Qualification

Sl. No.	Name of Equipment	Type of Equipment	Application	Equipment Rating
(a)	Booster Fans	Axial type with variable pitch control	Coal fired power plant	80% of the flow & 100% of the head of the offered Booster Fan with Fan Speed 900 rpm (maximum)
(b)	Slurry Recirculation Pumps	Centrifugal type	Wet Limestone based FGD application in Coal fired power plant	80% of the flow & 100% of the head of the offered Slurry Recirculation Pump

Sl. No.	Name of Equipment	Type of Equipment	Application	Equipment Rating
(c)	Oxidation Blowers	Centrifugal/ positive displacement type blower	Wet Limestone based FGD application in Coal fired power plant	80% of the flow & 100% of the head of the offered Oxidation Blower
(d)	Wet limestone Grinding mills	Horizontal Wet Ball mill	Wet Limestone based FGD application in Coal fired power plant	80% of the offered Ball mill capacity with pulverizing fineness not less than 90% thru 325 mesh
(e)	Slurry Pumps	Centrifugal type	Wet Limestone based FGD application or ash slurry application in Coal fired power plant	80% of the flow & 100% of the head of the offered Slurry Pump(s)
(f)	Agitators	Vertical/Horizontal	Wet Limestone based FGD application in Coal fired power plant	Agitator rating not less than that supplied for 500 MW or higher size unit for similar application
(g)	Vacuum Belt filters	Belt type	Wet Limestone based FGD application in Coal fired power plant	80% of the offered Vacuum Belt filter capacity

Bidder shall offer and supply only the type of the above equipment(s) for which he himself or the manufacturer proposed by the bidder for the above equipment(s) is qualified.

The provenness criteria for equipment (Booster Fans) stipulated at Sl. No. 4.01.02(a) above shall also be considered acceptable provided the rating parameters (i.e., flow, head and rated rpm) is covered within the operating regime of the respective fan performance curve of the reference plant equipment.

4.01.03 In case the Bidder or the proposed sub-vendor is not manufacturer of proven Booster Fans as per clause 1.2(a) above but is a manufacturer of such equipment for units of at least 500 MW rating, the Bidder or the proposed sub vendor can manufacture such equipment for 660 MW units also, provided it has collaboration or valid licensing agreement for design, engineering, manufacturing, supply of such

	equipment in India with such manufacturer who meet the requirements stipulated at clause 4.01.02(a) above for the Booster Fans.
4.01.04	A JV / Subsidiary Company formed for manufacturing and supply of equipment(s) as listed at clause no. 4.01.02 above in India, can also manufacture such equipment(s), provided that it has a valid collaboration or licensing agreement for design, engineering, manufacturing of such equipment(s) in India with a qualified equipment manufacturer who meets the requirements stipulated at clause 4.01.02 above (or the technology provider of the qualified equipment manufacturer) for the respective equipment(s). However, in this case, the proposed JV / Subsidiary Company before resorting to design, engineering, manufacturing of such proven equipment(s) listed at clause no. 4.01.02 above by himself should have sourced / shall source such proven equipment(s) for at least the first 660 MW unit completely from such qualified manufacturer. For subsequent units before taking up the manufacturing of such equipment(s), the bidder/ his sub-vendor(s) must create /have created manufacturing facilities at his works as per collaborator's/licenser's design, manufacturing and quality control system for such equipment(s). Further, in such a case, such qualified equipment manufacturers should have, directly or indirectly through its holding company/ subsidiary company, at least 26% equity participation in the Indian Joint Venture Company/ Subsidiary Company, which shall be maintained for a lock-in period of seven (7) years from the date of incorporation of such Joint Venture/ Subsidiary or upto the end of defect liability period of the contract, whichever is later. In addition, the Bidder along with the Indian Joint Venture Company/ Subsidiary Company, qualified equipment manufacturers and its holding/ subsidiary Company, as applicable, shall furnish DJU in which executant of the DJU shall be jointly and severally liable for the successful performance of the equipment as per the format enclosed in the bidding document. The DJU shall be submitted prior to the placement of order on the approved sub-vendor for a particular equipment. In case of award, each executant of the DJU except the Bidder shall be required to furnish an on demand bank guarantee for INR 1.5 Million (Indian Rupees One and Half Million only) for each equipment.
4.01.05	In case the Bidder or the proposed sub-vendor is not manufacturer of proven Oxidation Blowers as per clause 4.01.02(c) above but is a manufacturer of Blowers/compressors for minimum 50 NM^3/min capacity, the Bidder or the proposed sub-vendor can also manufacture Oxidation Blowers, provided it has collaboration or valid licensing agreement for design, engineering, manufacturing, supply of such Oxidation Blowers in India with such manufacturer who meet the requirements stipulated at clause 4.01.02(c) above for the Oxidation Blowers. However, in this case, Bidder or the proposed sub-vendor before resorting to design, engineering, manufacturing of such proven equipment by himself should have sourced / shall source such proven equipment for at least the first 660 MW unit completely from such qualified manufacturer. For subsequent units before taking up the manufacturing of such equipment, the bidder/ his sub-vendor must create /have created manufacturing facilities at his works as per collaborator's /licenser's design, manufacturing and quality control system for such equipments.

	In addition, the Bidder along with the qualified equipment manufacturer shall furnish DJU in which executant of the DJU shall be jointly and severally liable for the successful performance of the equipment as per the format enclosed in the bidding document. The DJU shall be submitted prior to the placement of order on the approved sub-vendor for Oxidation Blowers. In case of award, each executant of the DJU except the Bidder shall be required to furnish an on demand bank guarantee for INR 1.5 Million (Indian Rupees One and Half Million only).
4.01.06	In case the Bidder or the proposed sub-vendor is not manufacturer of proven Wet limestone Grinding mills as per clause 4.01.02(d) above but is a manufacturer of dry Grinding mills for power or cement industry of minimum 20 T/h capacity, the Bidder or the proposed sub-vendor can also manufacture Wet limestone Grinding mills, provided it has collaboration or valid licensing agreement for design, engineering, manufacturing, supply of such Wet limestone Grinding mills in India with such manufacturer who meet the requirements stipulated at clause 4.01.02(d) above for the Wet limestone Grinding mills. However, in this case, Bidder or the proposed sub-vendor before resorting to design, engineering, manufacturing of such proven equipment by himself should have sourced / shall source such proven equipment for at least the first660 MW unit completely from such qualified manufacturer. For subsequent units before taking up the manufacturing of such equipment, the bidder/ his sub-vendor must create /have created manufacturing facilities at his works as per collaborator's /licenser's design, manufacturing and quality control system for such equipments. In addition, the Bidderalong with the qualified equipment manufacturer shall furnish DJU in which executant of the DJU shall be jointly and severally liable for the successful performance of the equipment as per the format enclosed in the bidding document. The DJU shall be submitted prior to the placement of order on the approved sub-vendor for Wet limestone Grinding mills. In case of award, each executant of the DJU except the Bidder shall be required to furnish an on demand bank guarantee for INR 1.5 Million (Indian Rupees One and Half Million only).
4.01.07	In case the Bidder or the proposed sub-vendor is not manufacturer of proven Agitators as per clause 4.01.02(f) above but is a manufacturer of Agitators for similar process/duty application in petrochemical or metals and mining industry, the Bidder or the proposed sub-vendor can also manufacture Agitators, provided it has collaboration or valid licensing agreement for design, engineering, manufacturing, supply of such Agitators in India with such manufacturer who meet the requirements stipulated at clause 4.01.02(f) above for the Agitators. However, in this case, Bidder or the proposed sub-vendor before resorting to design, engineering, manufacturing of such proven equipment by himself should have sourced / shall source such proven equipment for at least the first 660 MW unit completely from such qualified manufacturer. For subsequent units before taking up the manufacturing of such equipment, the bidder/ his sub-vendor must create /have created manufacturing facilities at his works as per collaborator's /licenser's design, manufacturing and quality control system for such equipments. In addition, the Bidderalong with the qualified equipment manufacturer shall furnish DJU in which executant of the DJU shall be jointly and severally liable for the

	successful performance of the equipment as per the format enclosed in the bidding document. The DJU shall be submitted prior to the placement of order on the approved sub-vendor for Agitators. In case of award, each executant of the DJU except the Bidder shall be required to furnish an on demand bank guarantee for INR 1.5 Million (Indian Rupees One and Half Million only).
4.01.08	In case the Bidder or the proposed sub-vendor is a manufacturer of Slurry Pumps who meets the requirements stipulated at clause 4.01.02(e) above, the Bidder or the proposed sub-vendor can also manufacture Slurry Recirculation Pumps, provided it has collaboration or valid licensing agreement for design, engineering, manufacturing, supply of such equipment in India with such manufacturer who meet the requirements stipulated at clause 4.01.02(e) above for the Slurry Recirculation Pumps. However, in this case, Bidder or the proposed sub-vendor before resorting to design, engineering, manufacturing of such proven equipment by himself should have sourced / shall source such proven equipment for at least the first 660 MW unit completely from such qualified manufacturer. For subsequent units before taking up the manufacturing of such equipment, the bidder/ his sub-vendor must create /have created manufacturing facilities at his works as per collaborator's /licenser's design, manufacturing and quality control system for such equipment. In addition, the Bidderalong with the qualified equipment manufacturer shall furnish DJU in which executant of the DJU shall be jointly and severally liable for the successful performance of the equipment as per the format enclosed in the bidding document. The DJU shall be submitted prior to the placement of order on the approved sub-vendor for Slurry Recirculation Pumps. In case of award, each executant of the DJU except the Bidder shall be required to furnish an on demand bank guarantee for INR 1.5 Million (Indian Rupees One and Half Million only).
4.01.09	Before taking up the manufacturing of such equipment(s) as per clause 4.01.03, 4.01.04,4.01.05,4.01.06, 4.01.07 & 4.01.08 above, the Bidder / its sub vendor(s) must create (or should have created) manufacturing and testing facilities at its works as per Collaborator / licenser's design, manufacturing and quality control system for such equipments duly certified by the Collaborator / licensor. Further, the Collaborator / Licenser shall provide (or should have provided) all design, design calculation, manufacturing drawings and must provide (or should have provided) technical and quality surveillance assistance and supervision during manufacturing, erection, testing, commissioning of equipments.
4.01.10	Bidder shall offer and supply only the type of the above equipment(s) for which it, itself or the manufacturer / Collaborator(s) / Licenser(s) proposed by the Bidder for the above equipment(s) is qualified.
4.01.11	The Employer reserves the right to fully satisfy himself regarding capability and capacity of Bidder / its sub-vendor(s) and the proposed arrangement and may prescribe additional requirement before allowing manufacture of the equipment listed above for this contract.

Note to clause 4.01.02

(1) Whenever the term 'coal fired' is appearing above, "Coal" shall be deemed to also include bituminous coal/brown coal/lignite.

4.02.00 Sub QR for Civil Works:

4.02.01 Bidder or its agency should have in past executed civil and structural works for 500 MW or higher capacity coal based/Lignite based power plant including earthwork in filling involving mechanical compaction and cutting in hard rock, foundations, Bulk material handling plant involving underground storage hopper and underground tunnels.

4.02.02 Bidder can engage more than one agency, in case the Bidder itself is not able to meet the requirement at 4.02.01. The agency being engaged for a particular work should have in the past executed such works of 500 MW or higher capacity plant.

4.02.03 For Chimney, Bidder or its agency should have in the past built atleast one (1) reinforced concrete chimney of minimum 100m height.

4.02.04 In case Bidder or its agency do not meet the requirements at 2.1 and the Bidder proposes to engage agency (ies) for civil & structural works on work volume basis (except for Chimney), Bidder or its agency (ies) should have executed such works in the past and the annual rate of execution in the reference works should not be less than eighty percent (80%) of the asking rate of such works, (structural steel fabrication & erection, RCC, earthwork in filling involving mechanical compaction and cutting in hard rock, RCC in underground storage hopper and underground tunnels) for which it is being engaged.

Successful Bidder shall finalize the agency (ies) for each work in consultation with Engineer-in-charge at site before engaging them.

Design agency for Civil & Steel Structural Works:

4.02.05 Bidder or its agency (ies) should have carried out the design and detailed engineering of following works:

(i) Civil & Structural works associated with at least one bulk material handling plant for 500 MW or higher capacity coal based/Lignite based power plant.

(ii) For Chimney, Bidder or its design agency (ies) should have carried out design & detailed engineering of at least one reinforced concrete chimney with steel flues, of minimum 100m height.

(iii) Machine foundations such as Mill foundations/ Block foundations.

4.02.06	Bidder can engage more than one agency (of repute), in case the Bidder itself is not able to meet the requirement at 4.02.05. The design agency (ies) proposed by the Bidder shall be subject to Employer's approval.
4.03.00	**PROVENNESS CRITERIA FOR ELECTRICAL EQUIPMENTS**
4.03.01	**HT MOTORS**
4.03.01.1	**BOOSTER FAN MOTOR** The offered Squirrel cage Induction motor shall be from such a Manufacturer who has manufactured and supplied motor of 4MW or above rating, which should have been in successful operation for at least one (1) plant for a period not less than one (1) year reckoned as on the date of consideration for approval but not later than six months after award date of contract to the Main bidder.
4.03.02	**LT SWITCHGEAR**
4.03.02.1	**ROUTE 1**
4.03.02.1(i)	Bidder/ Sub Vendor should have manufactured and supplied at least a total of four hundred & fifty (450) nos. draw out type Air Circuit Breaker Panels and / or draw out type Motor Control Centre Panels with fault rating of at least 45kA for 1 second and 105kA peak under a single order and these panels should have been in successful operation for a period of not less than two (2) years reckoned as on the date of consideration for approval but not later than six months after award date of contract to the Main bidder.
4.03.02.1(ii)	Bidder/ Sub Vendor should have manufactured and supplied at least one hundred & fifty (150) nos. of Air Circuit Breakers having fault rating of at least 105kA MAKING and 45kA BREAKING, and their associated draw out type Air circuit breaker panels having fault rating of at least 45kA for 1 Second and 105kA peak, which should have been in successful operation for a period of not less than two (2) years reckoned as on the date of consideration for approval but not later than six months after award date of contract to the Main bidder.
4.03.02.2	**ROUTE 2**
4.03.02.2(i)	Bidder/Sub-vendor should have manufactured and supplied at least a total of two hundred & twenty five (225) nos. draw out type Air Circuit Breaker Panels and / or draw out type Motor Control Centre Panels with fault rating of at least 45kA for 1 second and 105kA peak under a single order and these panels should have been in

	successful operation for a period of not less than two (2) years reckoned as on the date of consideration for approval but not later than six months after award date of contract to the Main bidder.
4.03.02.2(ii)	Bidder/Sub-vendor should have manufactured and supplied at least seventy five (75) nos. of draw out type Air Circuit Breaker panels having fault rating of at least 45kA for 1 second and 105kA peak, which should have been in successful operation for a period of not less than two (2) years reckoned as on the date of consideration for approval but not later than six months after award date of contract to the Main bidder.
4.03.02.2(iii)	Bidder/Sub-vendor shall Associate/Collaborate with a manufacturer who meets the requirements stipulated in Route 1. In such a case, Bidder/Sub-vendor should furnish a Deed of Joint Undertaking executed by Bidder/Sub-vendor and its Associate/Collaborator as per the format enclosed in the bidding document in which the Bidder/Sub-vendor and its Associate/Collaborator are jointly and severally liable to the Employer for successful performance of the LT Switchgears under this package. This Deed of Joint Undertaking should be submitted prior to the placement of order on approved Sub Vendor. In case of award, the Associate or Collaborator of the Bidder / Sub Vendor (as applicable) will be required to furnish an on-demand Bank Guarantee for **INR** 1 **Million** (Indian Rupees One Million only). Note: Each Single Front Panel shall be counted as one (1) Panel, Double Front Panel as one (1) Panel and Air Circuit Breaker Panel as one (1) Panel.
4.03.03	**11 KV / 3.3 KV SWITCHGEARS** **Route 1**
4.03.03.1	The Bidder/ Sub Vendor should have manufactured and supplied on an average one hundred (100) numbers of 11kV and /or 6.6kV Switchgear panels per annum during the last three years reckoned as on the date of consideration for approval but not later than six months after award date of contract to the Main bidder.
4.03.03.2	The Bidder/ Sub Vendor should have designed, manufactured and supplied at least one hundred (100) numbers of 11kV and /or 6.6kV Switchgear panels complete in all respects with fault rating of at least 40kA for one (1) second and 100kA (peak), which should have been in successful operation for a period of at least two (2) years reckoned as on the date of consideration for approval but not later than six months after award date of contract to the Main bidder.

4.03.03.3	The Bidder/ Sub Vendor should have manufactured and supplied at least one hundred (100) numbers of Vacuum Circuit Breakers for 11kV and /or 6.6kV panels with a rating of 40kA rms BREAKING, 100kA peak MAKING and 40kA withstand for one (1) second, which should have been in successful operation in 6.6kV or higher voltage application for a period of at least two (2) years reckoned as on the date of consideration for approval but not later than six months after award date of contract to the Main bidder. **Route 2** Bidder/ Sub Vendor based on technological support of its Associate or Collaborator, can also participate provided
4.03.03.4	The Bidder/ Sub Vendor should have manufactured and supplied on an average one hundred (100) numbers of 11kV and /or 6.6kV Switchgear panels per annum during the last three years reckoned as on the date of consideration for approval but not later than six months after award date of contract to the Main bidder.
4.03.03.5	The Bidder/ Sub Vendor should have manufactured and supplied at least one hundred (100) numbers of 11kV and /or 6.6kV Switchgear panels complete in all respects with fault rating of at least 40kA for one (1) second and 100kA (peak). The Bidder/ Sub Vendor should have type tested the offered type of panels as specified.
4.03.03.6	The Bidder/ Sub Vendor should have manufactured and supplied at least one hundred (100) numbers of Vacuum Circuit Breakers for 11kV and /or 6.6kV panels with a rating of 40kA rms BREAKING, 100kA peak MAKING and 40kA withstand for one (1) second,reckoned as on the date of consideration for approval but not later than six months after award date of contract to the Main bidder.
4.03.03.7	Bidder's/ Sub Vendor's Associate or Collaborator meets the qualifying requirement stipulated at 4.03.03.2 & 4.03.03.3 stipulated under Route 1.
4.03.03.8	Bidder/ Sub Vendor furnishes a Deed of Joint Undertaking jointly executed by it and its Associate/ Collaborator as per format enclosed in the bidding document in which the Bidder/ Sub Vendor and its Associate/ Collaborator are jointly and severally liable to the Employer for successful performance of the MV Switchgears. This Deed of Joint Undertaking should be submitted prior to the placement of order on approved Sub Vendor. In case of award, the Associate or Collaborator of the Bidder / Sub Vendor (as applicable) will be required to furnish an on-demand Bank Guarantee for **INR**1 **Million**(Indian Rupees One Million only). **Note:** Equipment designed by the Bidder itself or through its Collaborator/Associate for reference plant, shall also be considered meeting the requirement of design.

4.03.04	**NUMERICAL RELAYS & NETWORKING**
4.03.04.1	Numerical Relays shall be offered from a Manufacturer who has manufactured and supplied and successfully configured at least 100 No's of Numerical Relays with IEC 61850 used for application in Feeder Protections/Transformer Protections/Motor Protections. These relays should have been in successful operation for at least one (1) year reckoned as on the date of consideration for approval but not later than six months after award date of contract to the Main bidder.
4.03.04.2	The Numerical Relay Network system shall be offered from an Integrator /Manufacturer who has designed and successfully done FAT for a network on IEC 61850 with at least 100 no's of Communicable Numerical Relays reckoned as on the date of consideration for approval but not later than six months after award date of contract to the Main bidder.
4.03.05	**AUXILIARY OIL FILLED TRANSFORMERS**
4.03.05.1	The Bidder/ Sub-Vendor should have manufactured & supplied at least two numbers (one each at two different installations) of 16 MVA, 11KV or higher rating oil filled transformers which should have been in successful operation for a period of at least two (2) years reckoned as on the date of consideration for approval but not later than six months after award date of contract to the Main bidder.
	And
4.03.05.2	Bidder/ Sub-Vendor should have his own facilities for conducting all routine and type tests as per IS: 2026 (except short circuit test).
	And
4.03.05.3	16 MVA, 11 KV Class or higher rated oil filled transformer manufactured by Bidder/ Sub-Vendor should have been successfully short circuit tested. **Note**: i) Two different installations mean two different project sites or two different contracts. ii) Equipment designed by the Bidder/Sub-vendor by itself or through its Collaborator/Associate for reference plant, shall also be considered meeting the requirement of design.
4.04.00	**Balance equipments/ systems** The Bidder at his option can source the balance of plant equipment/systems not covered in clause 4.01.00 & 4.02.00 above. However for such balance of plant equipment/systems, the Employer reserves the rights to satisfy himself on the provenness of the equipment and capability and capacity of the manufacturers.

4.05.00	Notwithstanding anything stated above, the Employer reserves the right to assess the capabilities and capacity of the Bidder/his collaborators/ licenser/ his sub-contractors to perform the contract, should the circumstances warrant such assessment in the overall interest of the Employer.
4.06.00	To enable the approval of sub-vendors, the Bidder shall provide all necessary data such as type, design, make, capacity, duty conditions, date of commissioning/ operation etc.

SUB-SECTION-II

PROJECT INFORMATION

1.00.00 **BACKGROUND**

North Karanpura Super Thermal Power Project (3x660 MW), a pit head coal based thermal power project, is located in Hazaribagh and Chatra districts of Jharkhand State. Basic inputs i.e. coal, water and land have already been tied up. The project is proposed for the States & Union Territories of Northern, Western and Eastern Regions and the State of Jharkhand.

The capacity of the project is 1980 MW comprising of three (3) units of 660 MW each.

1.01.00 **Location and Approach**

The power project is proposed to be located near Tandwa town in Chatra districts in the state of Jharkhand on Hazaribagh-Chatra State highway at a distance of about 50 kms from Hazaribagh city. The nearest commercial airport is Ranchi at a distance of 100 kms from project site. The nearest railhead Khalari Railway Station on Ranchi-Garhwa section of Eastern Railways is about 25 kms from project site.

Major rail/road distances from the project site are as under:

City		Distance Approx. (kms)
Ranchi	:	80
Khalari	:	25

The site is located near Tandwa town having latitude and longitude of about 23^0 50' N to 23º 52' N and 84^0 59' E to 85º 2' E respectively. The Vicinity Plan of the project is placed at **Annexure-I.**

Further to the information given in this sub-section, Bidders are also advised to visit the project site and collect data on local site conditions.

1.02.00 **Land**

The plant layout was readjusted and total land requirement was reduced from 2330 acres to about 970 acres. Out of 2277 acres of land the plant, ash dyke and transit camp is being suitably adjusted. No additional land is envisaged to be acquired in plant area. About 15 acres of land is envisaged to be acquired in Hazaribagh city for Township. Commissioner, Chatra vide dated 25.05.1999 and 14.06.2000 has given in-principle clearance for NKSTPP.

1.03.00 **Water**

Make up water requirement for this project would be about 20 cusec. Make up water requirement shall be met by raw water reservoir. Intake water pumps shall pump water to reservoir during the rainy season only from Garhi barrage.

1.04.00 **Fuel (Coal)**

1.04.01 **Coal Requirement, Availability and Linkage**

Coal requirement for the project is estimated as 10.60 Million Tonne/Annum (MTPA), considering a GCV of 3800 kcal/kg. Ministry of Coal vide letter dated 21.10.99 accorded inprinciple coal linkage of 10.00 MTPA subject to ratification by Standing Linkage Committee-Long Term (SLC (LT)), of MOC. SLC (LT) in its meeting held on 15.12.2000 firmed up the

coal linkage of 10.24 MTPA for the project. Subsequently, the coal linkage was withdrawn by SLC (LT) in its meeting held on 22/23.10.08.

Cabinet Committee on Investment (GOI) in its meeting on 20.02.13 decided in-principle to restore the original coal linkage granted to NKSTPP (i.e. from Magadh Coal Block) with the stipulation that the coal supply will commence during the 13th Five Year Plan. Ministry of Power has already taken up the matter of coal linkage restoration with Ministry of Coal vide dated 12.04.2013.

1.04.02 **Coal Transportation**

Coal from Magadh block of North Karanpura Coalfields is proposed to be transported to the project site through conveyor belt system. Parallel double stream Conventional troughed conveyors of 3000 MTPH rated capacity are envisaged for external coal handling plant. It is proposed to have one internal coal handling plant of 3000 MTPH rated capacity.

1.05.00 **Meteorological Data**

Important meteorological data from nearest observatory at Hazaribag is placed at Annexure-II**.**

1.06.00 **Plant Water Scheme**

The Plant water scheme is described below.

1.06.01 **Equipment Cooling Water (ECW) System (Unit Auxiliaries)**

All plant auxiliaries shall be cooled by De-mineralized water (DM) in a closed circuit. The primary circuit DM water shall be cooled through heat exchangers by Circulating Water tapped from CW system in a closed secondary circuit. The hot secondary circuit cooling water shall be cooled in the cooling towers and shall be returned back to the system.

1.06.02 **Ash Water System**

It is proposed to have HCSD (High concentration Slurry Disposal) system for combined fly ash and bottom ash. No recirculation of ash water from ash disposal area is envisaged.

1.06.03 **Other Miscellaneous Water Systems**

(a) The service water shall be taken from clarified water tank of Pretreatment plant. Service water (wash water) collected from various areas shall be treated using oil water separators, tube settlers, coal settling pits etc. as per requirement and treated water from liquid effluent treatment plant shall be recycled back to the service water system for re-use.

(b) The drinking water requirement of the plant shall be provided from water treatment plant.

(c) Steam Cycle make-up water, makeup to the primary circuit of ECW (unit auxiliaries) system, boiler fill water and makeup to the hydrogen generation plant shall be provided from Demineralising plant.

(d) The quality of Raw water is enclosed with this sub-section as Annexure-III.

1.07.00 **Criteria for Earthquake Resistant Design of Structures and Equipment**

All power plant structures and equipment, including plant auxiliary structures and equipment shall be designed for seismic forces as given in the Part - B of this section.

1.08.00 **Criteria for Wind Resistant Design of Structures and Equipment**

All structures and equipment of the power plant, including plant auxiliary structures and equipment, shall be designed for wind forces as given as given in Part B of this section.

ANNEXURE – I

VICINITY PLAN

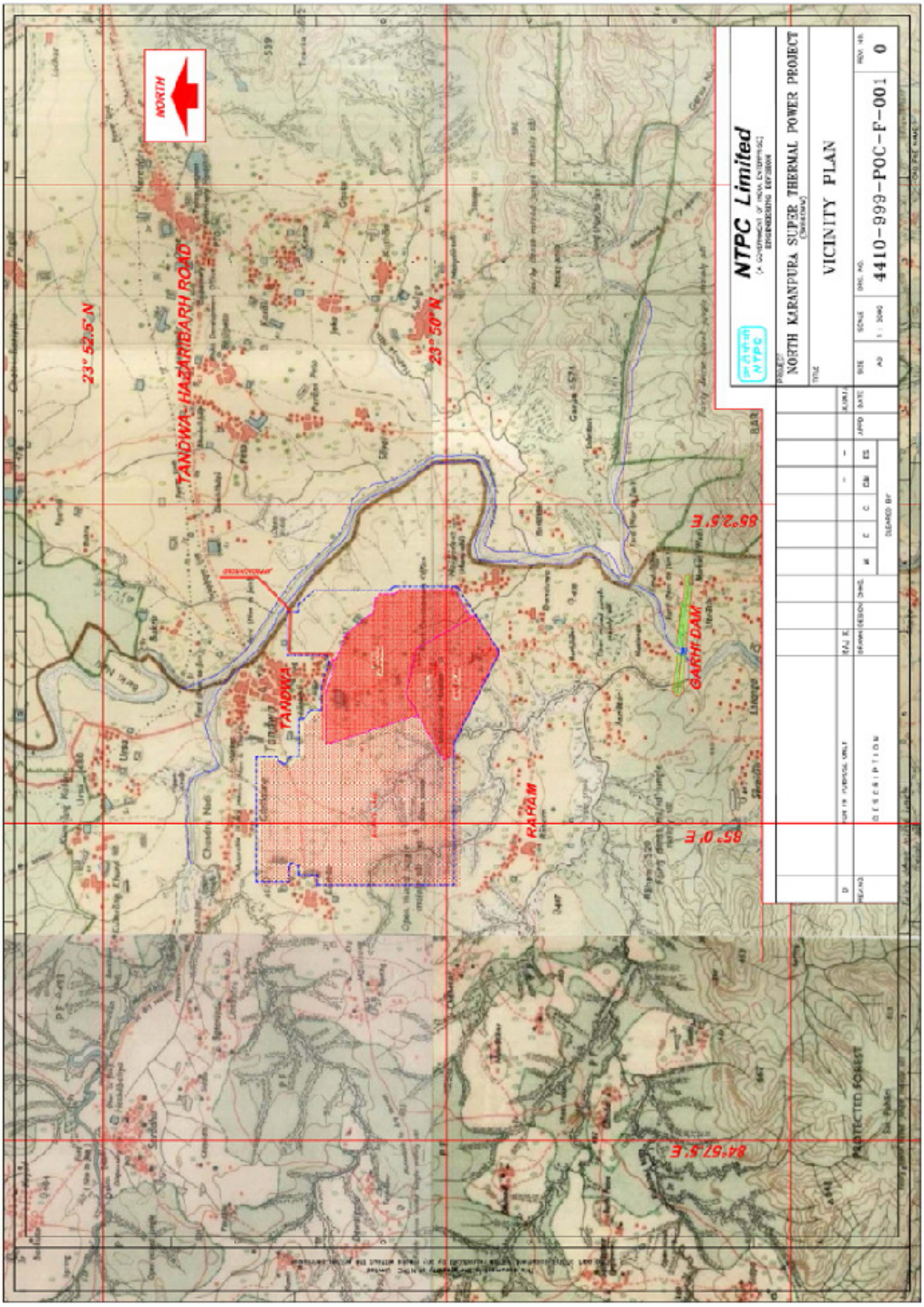

ANNEXURE – II

CLIMATOLOGICAL TABLE

CLIMATOLOGICAL TABLE

स्टेशन : हजारीबाग STATION : Hazaribagh

अक्षांश LAT 23°59′ N देशांतर LONG 85°22′ E समुद्री तल सतह से ऊँचाई HEIGHT ABOVE M. S. L 611 METRES मीटर.

1951 से 1980 तक के रेकार्डों पर आधारित BASED ON OBSERVATIONS FROM 1951 TO 1980

माह MONTH	स्टेशन का सतह दाब STATION LEVEL PRESSURE	वायु तापमान AIR TEMPERATURE: मध्य MEAN: शुष्क बल्ब DRY BULB	मध्य MEAN: नम बल्ब WET BULB	मध्य MEAN: दैनिक अधिक तम DAILY MAX	मध्य MEAN: दैनिक न्यून तम DAILY MIN	चरम EXTREMES: माह में उच्चतम HIGHEST IN THE MONTH	चरम EXTREMES: माह में निम्नतम LOWEST IN THE MONTH	चरम EXTREMES: उच्चतम HIGHEST	चरम EXTREMES: दिनांक और वर्ष DATE AND YEAR	चरम EXTREMES: निम्नतम LOWEST	चरम EXTREMES: दिनांक और वर्ष DATE AND YEAR	आर्द्रता HUMIDITY: सापेक्ष आर्द्रता RELATIVE HUMIDITY	आर्द्रता HUMIDITY: वाष्प दाब VAPOUR PRESSURE	मेघ की मात्रा CLOUD AMOUNT: समस्त मेघ ALL CLOUDS	मेघ की मात्रा CLOUD AMOUNT: निम्न मेघ LOW CLOUDS	वर्षा RAINFALL: मासिक योग MONTHLY TOTAL	वर्षा RAINFALL: वर्षा के दिनों की संख्या NO. OF RAINY DAYS	वर्षा RAINFALL: अधिकतम संभावित सबसे नम महीने का योग TOTAL IN WETTEST MONTH WITH YEAR	वर्षा RAINFALL: अधिकतम संभावित सबसे शुष्क महीने का योग TOTAL IN DRIEST MONTH WITH YEAR	वर्षा RAINFALL: 24 घंटों की सबसे भारी वर्षा HEAVIEST FALL IN 24 HOURS	वर्षा RAINFALL: दिनांक और वर्ष DATE AND YEAR	मध्य वायु गति MEAN WIND SPEED
	एच. पी. ए. hPa	डि.से. °C	डि.से. °C	डि.से. °C	डि.से. °C	डि.से. °C	डि.से. °C	डि.से. °C		डि.से. °C		प्रतिशत %	एच.पी.ए. hPa	आकाश के अंशमात्रा Oktas of sky	आकाश के अंशमात्रा Oktas of sky	मि.मि. mm		मि.मि. mm	मि.मि. mm	मि.मि. mm		कि.मी. प्र. घं. Kmph
जनवरी JAN	I 947.6	14.7	10.9	22.6	9.3	26.7	4.6	30.6	31 1881	0.9	07 1980	62	10.4	1.4	0.5	23.5	1.7	113.0 1919	0.0	68.1	06 1945	6.2
	II 944.5	18.9	12.8									49	10.4	1.6	0.5							
फरवरी FEB	I 945.7	17.9	12.3	25.7	12.0	30.5	6.9	33.6	22 1967	1.7	06 1974	52	10.3	1.3	0.4	16.2	1.4	117.3 1907	0.0	63.5	23 1927	7.3
	II 942.6	22.6	14.4									39	10.4	1.4	0.6							
मार्च MAR	I 944.0	23.4	15.0	30.8	16.6	35.6	11.4	38.9	27 1892	6.7	04 1898	39	10.8	1.5	0.3	18.4	1.7	164.3 1905	0.0	44.2	20 1946	7.9
	II 940.6	27.8	16.3									29	10.2	1.9	0.5							
अप्रैल APR	I 941.0	28.6	18.2	35.7	21.3	39.3	16.4	41.7	22 1956	10.6	01 1968	36	13.3	1.8	0.3	17.0	1.4	81.6 1952	0.0	60.5	22 1925	8.6
	II 937.1	32.4	18.8									26	11.8	2.2	0.7							
मई MAY	I 937.0	30.7	21.1	37.8	24.0	41.5	19.3	43.9	18 1897	15.6	22 1977	43	18.1	2.5	0.3	43.4	2.9	187.2 1936	0.0	84.1	27 1887	9.1
	II 933.4	34.3	21.2									32	15.7	2.9	0.7							
जून JUN	I 933.4	28.4	23.3	34.1	24.1	40.1	21.0	46.6	14 1975	18.3	02 1975	67	25.0	5.3	1.8	177.1	9.2	774.5 1911	0.5 1905	249.2	24 1911	8.7
	II 930.4	30.4	23.5									60	23.8	5.8	2.5							
जुलाई JUL	I 933.1	25.6	23.8	29.5	23.0	33.2	21.4	39.6	08 1975	19.3	18 1975	86	28.2	6.5	3.8	310.0	16.2	693.2 1930	99.8 1911	221.7	06 1953	7.9
	II 930.5	26.8	24.1									80	28.1	6.4	3.7							
अगस्त AUG	I 934.5	25.2	23.7	29.1	22.7	31.5	21.3	34.2	03 1972	20.0	29 1967	88	28.3	6.4	3.8	320.1	16.2	706.1 1943	83.8 1928	190.1	17 1888	7.6
	II 931.6	26.4	24.3									84	28.7	6.4	3.5							
सितम्बर SEP	I 938.2	25.1	23.1	29.0	22.2	31.5	20.4	33.3	24 1960	17.8	29 1950	85	26.8	5.1	2.9	260.9	11.6	530.9 1893	40.7 1986	167.4	28 1963	7.3
	II 935.1	26.0	23.5									81	27.2	5.6	2.9							
अक्तूबर OCT	I 943.6	23.9	20.4	28.5	18.9	31.3	14.3	34.0	04 1966	9.7	12 1972	73	21.4	2.4	1.2	80.6	4.1	378.6 1963	0.0	149.4	24 1963	5.2
	II 940.6	24.9	20.7									68	21.3	2.9	1.3							
नवम्बर NOV	I 947.0	20.2	15.5	25.8	13.3	28.3	9.0	31.7	01 1896	4.4	25 1879	60	14.3	1.2	0.4	5.5	0.4	160.0 1924	0.0	95.0	06 1924	4.8
	II 943.9	21.4	16.0									56	14.2	1.6	0.5							
दिसम्बर DEC	I 948.2	15.7	11.8	23.1	9.3	26.2	5.1	29.4	20 1950	0.5	24 1961	82	11.1	1.1	0.2	5.2	0.4	81.3 1885	0.0	39.4	13 1885	5.3
	II 945.1	18.7	13.1									52	11.1	1.2	0.2							
वार्षिक योग का माध्य ANNUAL TOTAL OR MEAN	I 941.1	23.3	18.3	29.3	18.1	41.9	3.8	46.6		0.5		63	18.2	3.0	1.3	1277.9	67.2	2146.0	739.6	249.2		7.2
	II 938.0	25.9	19.1									55	17.7	3.3	1.5			1893	1966			
वर्षों की संख्या NUMBER OF YEARS	I 28	27	27	27	28	27	28	83		83		27	27	29	23	29	29	99	99	99		23
	II 28	28	28									28	27	30	22							

ANNEXURE-III

RAW WATER ANALYSIS

Sl. No.	Constituent	as	mg per litre
1.	Calcium	CaCO3	65
2.	Magnesium	CaCO3	41
3.	Sodium	CaCO3	98
4.	Potassium	CaCO3	5
5.	Total Cations	CaCO3	209
6.	Total Alkalinity	CaCO3	150
7.	Chloride	CaCO3	25
8.	Sulphate	CaCO3	34
9.	Total Anions	CaCO3	209
9.	Silica (Reactive)	SiO2	9
11.	Iron	Fe	1.2
12.	pH Value	-	7.6-8.2
13.	Turbidity	NTU	200
14.	Organics(As per $KMnO_4$ method)	Number	2

CLARIFIED WATER ANALYSIS

Sl. No.	Constituent	Value	Unit
1	Iron	<0.3	mg/L as Fe
2	Turbidity	<10	NTU
3	Organics (as per $KMnO_4$ method)	<0.05	mg/L
4	Gravity Filter Outlet (Effluent Turbidity)	<2	NTU
5	Gravity Filter Inlet (Turbidity)	10	NTU

ANNEXURE-IV-1

TABLE-1
LIGHT DIESEL OIL CHARACTERISTICS
(AS PER IS 15770-2008)

	Characteristics	LDO
1.	Pour Point (max)	21 ℃ & 12℃ for Summer and Winter respectively
2.	Kinematic viscosity in centistokes at 40 deg.C	2.5 to 15.0
3.	Sediment percent by mass (max)	0.10
4.	Total sulphur percent by mass (max)	1.5
5.	Ash percentage by mass (max)	0.02
6.	Carbon residue (Rams bottom) percent by pass (max.)	1.50
7.	Acidity inorganic	Nil
8.	Flash point (Min.) -Pensky Martens	66 deg.C
9.	Copper strip corrosion for 3 hours at 100℃	Not worse than No. 2
10.	Water content, % by volume (max)	0.25
11.	GCV(kcal/kg)	10,000

TABLE-2 **ANNEXURE-IV-2**

HIGH SPEED DIESEL OIL CHARACTERISTICS

[AS PER IS **1460-2005 (BS-II)**]

S. No.	Particulars	Unit	Value
1.	PHYSICAL PROPERTIES		
	a. Distillation volume recovery @ 350^0C	% vol. (min)	85
	b. Distillation volume recovery @ 370^0C	% vol. (min)	95
	c. Kinematic Viscosity @ 40 Degree C	cSt	2.0 – 5.0
	d. Density @ 15 Degree C	kg/m^3	820 – 860
	e. Pour Point		
	- Summer	Degree C (max)	15
	- Winter	Degree C (max)	03
	f. Cold Filter Plugging Point		
	- Summer	Degree C (max)	18
	- Winter	Degree C (max)	06
	g. Flash Point (Abal)	Degree C (max)	35
	h. Lubricity WSD 1.4 @ 60 Degree C	Microns (max)	460
2.	HEATING VALUE		
	a. Higher Heating Value (HHV)	Kcal/Kg	11,000
	b. Lower Heating Value (LHV)	Kcal/Kg	10,300
3.	ACIDITY		
	a. Inorganic	mg KOH/g	Nil
	b. Total	mg KOH/g	0.2 (max.)
4.	Copper Strip Corrosion 3 hours @100^0C	No.	1 (max)
5.	RCR on 10% residue	% wt.	0.3 (max)
6.	CONTAMINANTS		
	a. Ash	ppm (wt.)	100 (max)
	b. Sediments	% wt	0.05 (max)
	c. Total Sulphur	% wt	0.05 (max)
	d. Water Content	% volume	0.05 (max)
	e. Trace Metals		
	- Na + K	ppm (wt)	0.30 (max)
	- Vanadium	ppm (wt)	0.50 (max)
	- Lead	ppm (wt)	0.50 (max)
	- Calcium	ppm (wt)	2.0
	- Ni + Zn	ppm (wt)	Nil
7.	Nitrogen content (FBN)	% wt.	0.015

TABLE-3

ANNEXURE-IV-3

PROPOSED COAL CHARACTERISTICS FOR NORTH KARANPURA STPP (3 x 660 MW)

S.No.	Characteristics (as received basis)	Range of 95 % coal supplies			Range of 5 % coal supplies
		Column - 1	Column - 2	Column - 3	
1.0	PROXIMATE ANALYSIS	Design	Worst	Best	
1.1	Total Moisture (%)	15	18	12	12-18
1.2	Ash (%)	40	46	36	33-46
1.3	Volatile Matter (%)	19	18	22	23-18
1.4	Fixed Carbon (%)	26	18	30	31-18
1.5	Total (%)	100	100	100	
2.0	ULTIMATE ANALYSIS				
2.1	Carbon (%)	29.73	23.08	37.32	40.62-23.08
2.2	Hydrogen (%)	3.7	3.54	3.92	4.02-3.54
2.3	Sulphur (%)	0.5	0.6	0.4	0.4-0.6
2.4	Nitrogen(%)	1.8	1.45	1.6	1.4-1.45
2.5	Oxygen(%)(By difference)	8.66	6.7	8.32	8.12-6.7
2.6	Carbonates (%)	0.58	0.6	0.4	0.4-0.6
2.7	Phosphorous(%)	0.03	0.03	0.04	0.04-0.03
2.8	Total Moisture (%)	15	18	12	12-18
2.9	Ash (%)	40	46	36	33-46
	Total	100	100	100	
2.10	GCV (Kcal/Kg)	3300	2800	4000	4300-2800
2.11	Hard Grove Index	55	50	60	50-65
3.0	ASH ANALYSIS				
3.1	Silica (%)	59.79	61.3	56.7	62-56
3.2	Alumina(%)	25.36	28	23.5	28-23
3.3	Iron Oxide (%)	7.2	6	10	6-10
3.4	Titania	1.2	1	1.5	1-1.7
3.5	Phophoric Anhydride (%)	2.6	1.5	3	1-3
3.6	Lime (%)	0.88	0.5	1.5	0.5-1.7
3.7	Magnesia (%)	0.55	0.4	1	0.4-1.1
3.8	Sulphuric Anhydride (%)	1.2	0.5	1.4	0.5-1.7
3.9	Alkalies (by difference)	1.22	0.8	1.4	0.6-1.8
	Total	100	100	100	
4.0	ASH FUSION RANGE				
	REDUCING ATMOSPHERE				
4.1	Initial Deformation Temp.(oC	1100	1100	1100	1100-1150
4.2	Hemispherical Temp. (oC)	1300	1250	1350	1250-1400
4.3	Fusion Temperature (oC)	1400	1400	1400	1400-1450

ANNEXURE-IV-4

TABLE – 4

TYPICAL IMPORTED COAL AND ASH CHARACTERISTICS

Sl.No.	Characteristics (as received basis)	Imported Coal	
		Worst	Best
1.0	**Proximate Analysis**		
1.1	Total Moisture (%)	20	16
1.2	Ash (%)	10	10
1.3	Volatile Matter (%)	30	45
1.4	Fixed Carbon (%)	40	29
1.5	Total (%)	100	100
2.0	**Ultimate Analysis**		
2.1	Carbon (%)	56.4	62.4
2.2	Hydrogen (%)	4.5	4.9
2.3	Sulphur (%)	0.9	0.8
2.4	Nitrogen (%)	0.9	0.5
2.5	Oxygen (%) (By difference)	7.3	5.4
2.6	Carbonates (%)	0	0
2.7	Phosphorous (%)	0	0
2.8	Total Moisture (%)	20	16
2.9	Ash (%)	10	10
	Total	100	100
2.10	GCV (Kcal/Kg)	5800	6500
2.11	Hard Grove Index	45	60
2.12	YGP (mg/kg)	100	70
3.0	**Ash Analysis**		
3.1	Silica (SiO_2) (%)	32.74	34.94
3.2	Alumina(Al_2O_3) (%)	30.5	28.43
3.3	Iron Oxides(Fe_2O_3) (%)	18.2	15.2
3.4	Titania (TiO_2)	1.56	1.76
3.5	Phosphoric Anhydride(P_2O_5) (%)	0.44	0.54
3.6	Lime (CaO) (%)	6.12	7.62
3.7	Magnesia (MgO) (%)	1.83	1.93
3.8	Sulphuric Anhydride (%)	6.95	7.65
3.9	Sodium Oxide (Na_2O) (%)	0.3	0.4
3.10	Balance alkalies (by difference)	1.36	1.56
	Total	100	100
4.0	**Ash Fusion Temperature reducing temperature**		
4.1	Initial deformation Temp (°C)	1100	1250
4.2	Hemispherical Temp. (°C)	1300	1350
4.3	Flow Temp. (°C)	1400	1400

0-00-020-76722

REVISION	02	R: RS 25APR15	C: TD 25APR15	A: MC 25APR15

04 – 1. SEAL AIR FAN INDICATED. 2. FLUE DIA. UPDATED. 3. NTPC DRAWING NO. CORRECTED. 4. SPACE FOR CABLE TRAY INDICATED. 5. AIR HEATER AND DUCT HOPPER LEVEL REVISED.

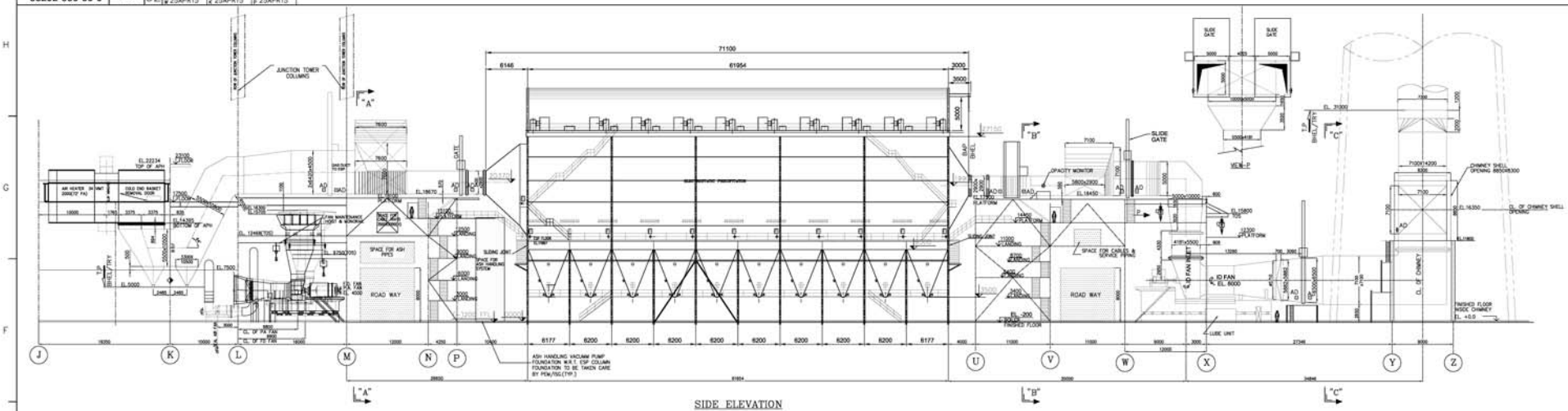

SIDE ELEVATION

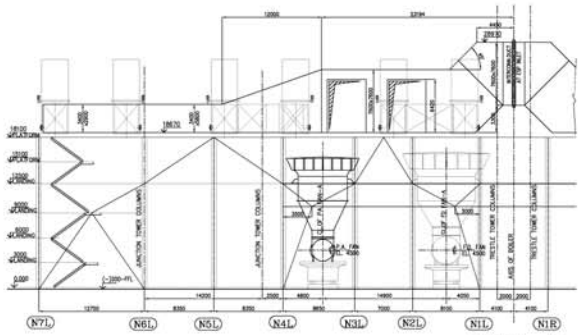

SECTION – AA

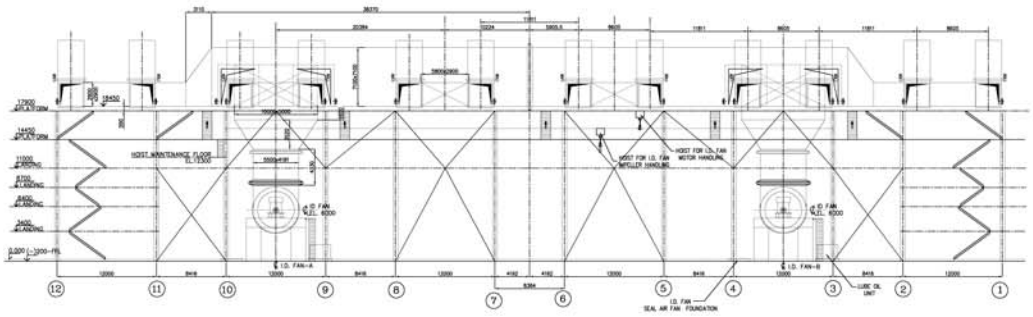

SECTION – BB

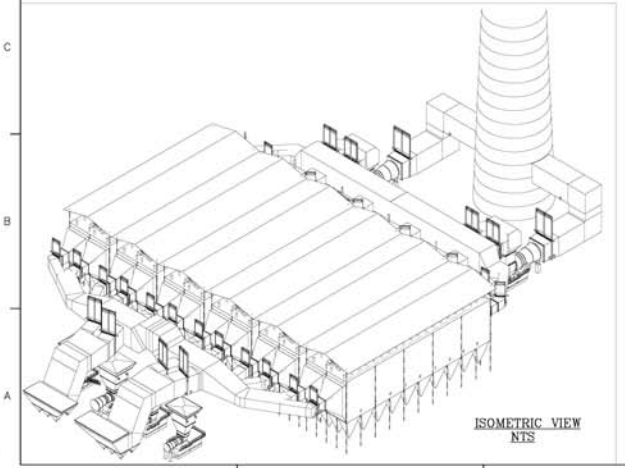

ISOMETRIC VIEW
NTS

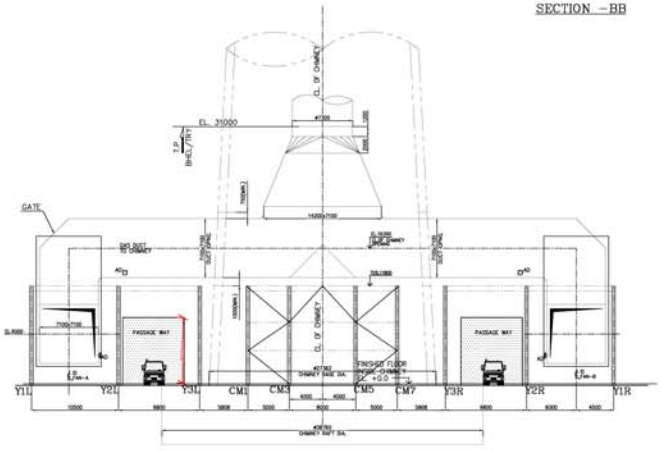

SECTION – CC

REV.	DESCRIPTION	DATE	DRAWN BY	CHECKED BY	APPRVD BY
02	ISSUED FOR APPROVAL	25APR15	R.S.	T.D	M.C
01	NTPC COMMENTS UPDATED	07JAN15	R.S.	T.D	M.C
00	INITIAL ISSUE	15NOV14	R.S.	T.D	M.C

NTPC SAG NO: 4410-001-102-PVM-F-013 SH01 OF 02 | BHEL CUSTOMER NO.: 1720 & 1721

CUSTOMER: NTPC LIMITED (A Government of India Enterprise)

PROJECT: NORTH KARANPURA SUPER THERMAL POWER PROJECT STAGE-I (3 X 660MW) EPC PACKAGE

BHARAT HEAVY ELECTRICALS LIMITED, BOILER PLANT UNIT, TIRUCHIRAPALLI-620014

	NAME	SIGNATURE	DATE
DSN			
DRG			13.11.14
CHKD			13.11.14
APPD			13.11.14

TITLE: GEN. ARRGT. - BACK END ELEVATION (LAYOUT OF ID SYSTEM-ELEVATION)

ALL DIMENSIONS IN MILLIMETRE | PROJECTION | SCALE 1:200 | FILE NAME: | DIRECTORY

DRG NO: 0-00-020-76722 | TR.V: 02

CAUTION: THE INFORMATION ON THIS DOCUMENT IS THE PROPRIETARY PROPERTY OF BHEL AND MUST NOT BE USED DIRECTLY OR INDIRECTLY IN ANY WAY DETRIMENTAL TO THE INTEREST OF BHEL COMPANY

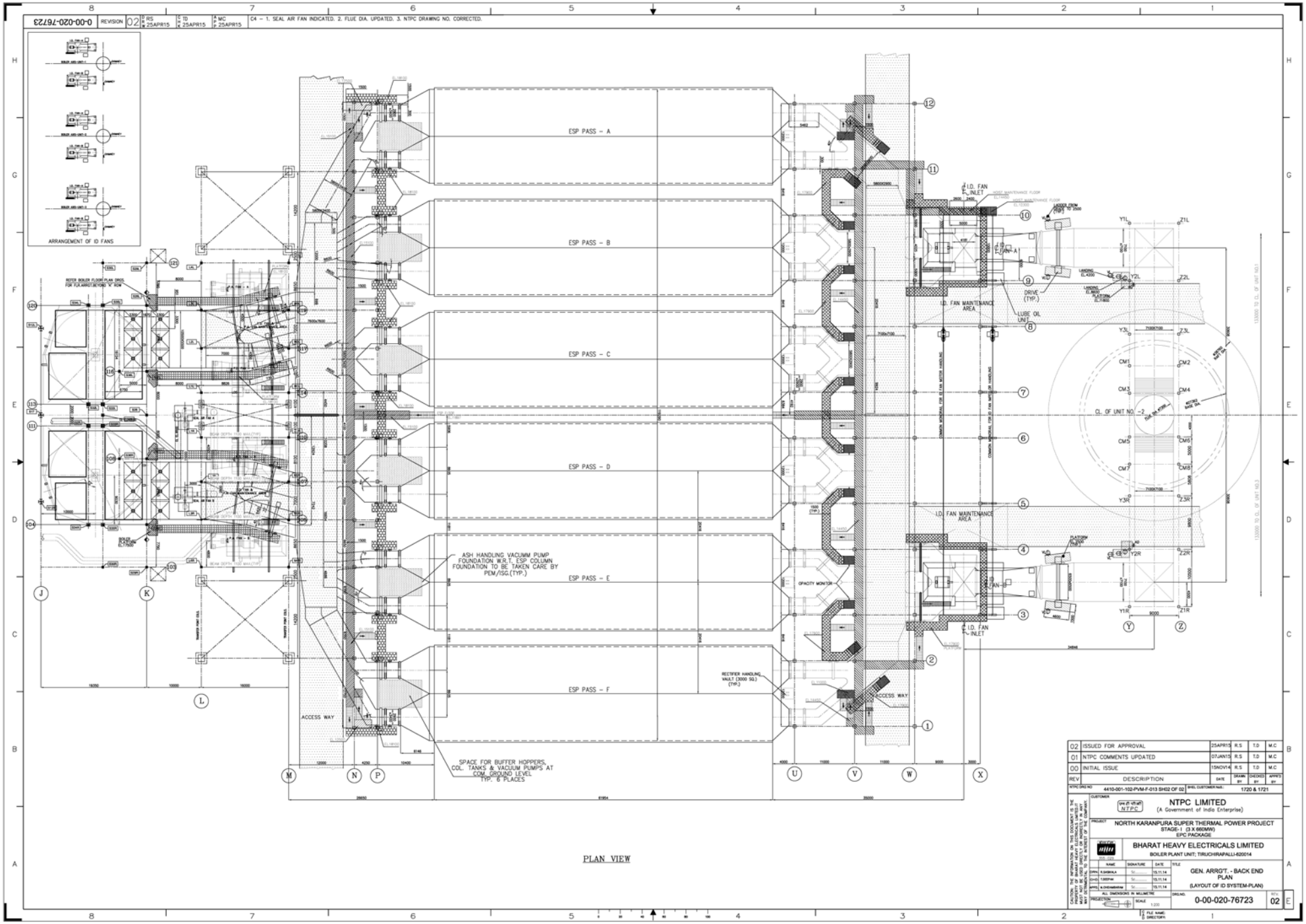
0-00-020-76723
REVISION 02
C4 – 1. SEAL AIR FAN INDICATED. 2. FLUE DIA. UPDATED. 3. NTPC DRAWING NO. CORRECTED.
ARRANGEMENT OF ID FANS
ESP PASS – A
ESP PASS – B
ESP PASS – C
ESP PASS – D
ESP PASS – E
ESP PASS – F
I.D. FAN INLET
I.D. FAN MAINTENANCE AREA
LUBE OIL UNIT
DRIVE (TYP.)
OPACITY MONITOR
ASH HANDLING VACUMM PUMP FOUNDATION W.R.T. ESP COLUMN FOUNDATION TO BE TAKEN CARE BY PEM./ISG.(TYP.)
RECTIFIER HANDLING VAULT (3000 SQ.) (TYP.)
ACCESS WAY
SPACE FOR BUFFER HOPPERS, COL. TANKS & VACUUM PUMPS AT COM. GROUND LEVEL TYP. 6 PLACES
CL OF UNIT NO. -2
CL OF UNIT NO.3
PLAN VIEW
02 ISSUED FOR APPROVAL 25APR15 R.S T.D M.C
01 NTPC COMMENTS UPDATED 07JAN15 R.S T.D M.C
00 INITIAL ISSUE 15NOV14 R.S T.D M.C
NTPC DRG NO 4410-001-102-PVM-F-013 SH02 OF 02
BHEL CUSTOMER Nos. 1720 & 1721
NTPC LIMITED
(A Government of India Enterprise)
NORTH KARANPURA SUPER THERMAL POWER PROJECT
STAGE-I (3 X 660MW)
EPC PACKAGE
BHARAT HEAVY ELECTRICALS LIMITED
BOILER PLANT UNIT; TIRUCHIRAPALLI-620014
GEN. ARRG'T. - BACK END PLAN
(LAYOUT OF ID SYSTEM-PLAN)
0-00-020-76723
02

SUB-SECTION-III

SCOPE OF SUPPLY & SERVICES

1.00.00	**SCOPE OF SUPPLY AND SER□ICES** The scope of work for the equipment and accessories to be furnished in accordance with this specification shall include design, engineering, manufacture, inspection and testing at supplier's works, packing, forwarding to site, unloading, pre- assembly, assembly, erection, supervision, pre-commissioning, testing and commissioning and performance testing of the equipment/system and works indicated in this Sub-section of the technical specification. Any item or works though not specifically mentioned in this specification but needed to complete the equipment & systems to meet the intent of the Specification shall also be furnished, unless specifically mentioned under “Exclusion” in Sub-Section-IV of Part-A, Section-VI of the Technical Specifications.
1.01.00	The scope of supply & services is detailed out in the following Sub-Sections. **S□□-S□□□□□** III A - Mechanical equipment and associated systems III B - Electrical Systems III C - C&I systems III D - Civil works
1.02.00	Scope of supply of the Contractor includes mandatory spares, start-up and commissioning spares and consumables. The general requirements in respect of various types of spares is given in Sub-Section-VII, Part-A of Technical Specification.
1.03.00	**T□□□□** The scope of the Bidder includes all shop tests, type tests, site tests, routine tests, etc., fulfillment of complete quality assurance & inspection requirements and related activities for all the equipment & systems covered under the scope of work of Bidder as per the stipulations of Technical Specifications.
1.04.00	**P□□□□□ □P□□□□□□** The Contractor's scope of work includes supply of paints and painting of all equipments and structures as per the Employer’s standard color coding scheme which shall be furnished to the Contractor during detail engineering stage. The painting of various components shall comply with the requirements stipulated in different part of this specification. However, for components where no specific requirement is stipulated, the painting conforming to the requirements stipulated below shall be provided.

(i) Surface preparation shall be blast cleaned conforming *to* Sa *2-1/2* Swiss Standard.

(ii) Primer coat shall consist of epoxy resin based zinc phosphate primer having minimum DFT of 100 microns.

(iii) Intermediate coat (or under coat) shall consist of epoxy resin based paint pigmented with Titanium dioxide with minimum DFT of 100 microns.

(iv) Top coat shall consist of one coat of epoxy paint suitable pigmented of approved shade and colour with glossy finish and DFT of 75 microns. Additionally finishing coat *of* polyurethane of minimum DFT of 25 microns shall be provided.

1.05.00 **Pr□-□□□ □ □□□□□□□□ □□d C□□ □ □□□□□□□□ A□□□□□□□**

1.05.01 Contractor’s Scope shall include all pre-commissioning and commissioning activities, required for successful performance of all equipments and systems under this package. Contractor's scope shall also include supply of all materials and services including the following for successful conductance of pre-commissioning and commissioning activities:

1.05.02 Complete pre-commissioning work including tests of facilities and all other tests as mutually agreed in the Contractor’s quality assurance program as well as those identified in the specification.

1.05.03 Commissioning and initial operation of the facilities.

1.05.04 Supply of all consumables as may be required for above pre-commissioning/ commissioning activities

1.05.05 Supply of all temporary equipment such as piping including supports, valves, blowers and all necessary instrumentation for successful conductance of pre-commissioning and commissioning activities. All temporary equipments, blowers, valves etc. brought to sites, by the Contractor for pre-commissioning/commissioning purpose shall be in good working condition to ensure its safe and reliable operation at site. All such temporary equipments/components shall be brought to site at least three (3) months prior to commencement of relevant pre-commissioning/ commissioning activities. On receipt of the temporary equipments/components at site, the same shall be inspected by the Employer to ensure its safe and reliable operation and if in the opinion of the Employer the temporary equipments/ components are not in satisfactory conditions to ensure it's safe and reliable operation the same shall be immediately replaced by the Contractor.

1.05.06 The temporary equipments specifically brought by the Contractor solely for the pre-commissioning and commissioning work shall on completion of these activities, remain the property of the Contractor.

1.05.07	The selection of material of all the temporary equipments/ instruments shall be compatible with the service conditions expected during pre-commissioning/ commissioning activities.
1.05.08	All temporary equipments and instruments shall be clearly listed out in the bid.
1.05.09	Supply of all labour, skilled/ semi skilled supervisors, engineers and any other manpower.
1.05.10	The scope of Contractor shall also include necessary approach & Platforms for all the instruments required during commissioning and testing. These approach platforms shall be provided to meet all required safety norms and these shall be permanent nature.
1.06.00	**F□r□□F**ill of **C**onsumables, **O**ils & **L**ub**r**icants All the first fill and one year's topping requirements of consumable such as grease, oil, lubricants servo fluids etc. which will be required to put the equipments covered under the scope of specifications, into successful commissioning/initial operation and to establish completion to facilities shall be furnished by the Contractor, unless specifically excluded under the Exclusions in these specifications and documents.
1.07.00	**G**ua**r**antee **T**ests The Guarantee tests for various equipment and systems shall be carried out as specified under Sub-Section-VI, Part-A of Technical Specification. All special equipment, tools and tackles, instruments, measuring devices required for the successful conductance of Guarantee Tests shall be provided by the Contractor, free of cost. All costs associated with the tests shall be included in bid price.
1.08.00	**S**pa**r**e **P**a**r**ts The Contractor's scope of supply includes all the necessary commissioning spares, mandatory spares as described Sub-Section-VII / Part-A in the schedule of spare parts. The Employer reserves the right to finalize the exact quantities of the spare parts and effect price adjustment on the basis of the rates quoted by the Contractor. The Spare ordered by Employer shall be delivered at the site as per agreed delivery schedule.
1.08.01	**M**an**d**ato**r**y **S**pa**r**es The Bidder shall indicate the prices for each & every item (except for items not applicable to the Bidder's design) in the 'Schedule of mandatory spares' whether or not he considers it necessary for the Employer to have such spares. If the Bidder fails to comply with the above or fails to quote the price of any spares items, the cost of such spars shall be deemed to be included in the contract price. The Bidder shall

furnish the population per unit of each item. Wherever sets are mentioned, the Bidder has to give the item details & prices of each item

1.08.02 **R□□□□ □ □□d□d S□□r□□**

In addition to the spares mentioned above, the Bidder shall also indicate in the 'Schedule of recommended list of spare parts', his recommended list of spare with unit prices, for three years of normal operation of the plant. The Employer reserves the right to buy any or all of the recommended spare parts. The Bidder shall also indicate the service expectancy period for the spare parts under normal operating conditions before the replacement is necessary. In case some of the spares parts become unapplicable due to change in design/engineering agreed by the Employer, the Employer reserves the right to procure some other spares whose prices are already available in the initial offer in lieu of such not applicable spares subject to the condition that the total amount of the initial order remains the same.

1.08.03 **C□□ □ □□□□□□□□ S□□r□□**

It will be the responsibility of the Contractor to assess and furnish a list of all commissioning spars required for successful commissioning of all the equipment covered under the contract. Such a list shall be furnished by the Contractor within 8 months from the date of LOA, separately for each equipment and shall be reviewed by NTPC and discussed for mutual agreement. The commissioning spares will be so identified as not to allow the Initial operation to suffer for want of such commissioning spares. The identification of commissioning spares will not in any way relieve the Contractor of any of his responsibilities of satisfactory performance under the provisions of other conditions of contract. All the commissioning spares shall be deemed to be included in scope of the Contractor as a part of the respective equipment package at no extra cost to the Employer.

1.08.04 **P□□□□□□ □ Pr□□□r□□□□□**

Each spare part shall be clearly marked or labeled on the outside of the packing with its description. When more than one spare part is packaged in a single case, a general description of the contents shall be shown on the outside of such a case and other packages must be suitably marked and numbered for the purpose of identification. All cases, containers or packages, are liable to be opened for such examination as may be considered reasonable by the Engineer. In case of equipment supplied with grease/lubricants from imported origin, the supplier shall clearly indicate the indigenous equivalent of the grease/lubricant and source of supply so as to enable the Employer to procure these items from indigenous sources.

1.09.00	**S**pecial **T**ools & **T**ackles an **d T**est **M**easu **r**ing **E**quipments One set of all special tools and tackles including testing, calibrating and measuring instruments required for erection, assembly, disassembly and maintenance of all equipments/systems covered under the scope of the Contractor shall be supplied by the Contractor. These shall not be used for erection/commissioning purposes and shall be in an unused and new condition, when they are handed over to the Employer. A list of such special tools and tackles shall be submitted along with the offer.
1.10.00	The scope of the Contractor includes complete design and engineering, technical co-ordination (including participation and arranging technical co-ordination meetings), finalization of drawings/documents, submission of engineering drawing/documents and processing of their approvals by the Employer as detailed in Part-C, Section-VI and other relevant clauses given elsewhere in the technical specification. Further, the scope shall also include submission, in proper shape & format, of all types of manuals, handbooks & documents in requisite numbers to the Employer at different phases of the project as per the requirement of Employer.
1.10.01	Bidder shall furnish all relevant data required by the Employer, at interface points within 45 days of notification of award.

SUB-SECTION-III-A

MECHANICAL EQUIPMENTS & SYSTEMS

SUB-SECTION-III-A1	**FLUE GAS DESULPHURISATION SYSTEM**
SUB-SECTION-III-A2	**LIME STONE □ GYPSUM HANDLING SYSTEM**
SUB-SECTION-III-A□	**PLANT UTILITIES**
SUB-SECTION-III-A4	**ECW SYSTEM**

SUB-SECTION-III-A1

FLUE GAS DESULPHURISATION SYSTEM

1.00.00	The contractor's scope of supply shall include engineering, design, manufacture, supply, erection, commissioning and testing of complete mechanical, electrical, C&I and associated civil and structural works for Flue Gas Desulphurization system and its auxiliaries for three (3) number steam generators of 660 MW, as detailed in this specification. Steam generator (in Employer's scope) shall be super-critical, balance draft, dry bottom, pulverised coal fired type with steaming capacity of 2220 TPH at 100% BMCR. The characteristics of the coal, ash and other relevant design data is given in Part-A, Sub section-V of this specification. The FGD system shall be necessarily based on Wet Lime Stone FGD technology and is intended to reduce the emissions of Sulphur Dioxide in flue gas produced by coal being fired in boiler to the limits specified elsewhere in the technical specification.
1.01.00	Complete Electrical & Control & Instrumentation system as required for the FGD system shall be included in the scope of supply. All electrical drives and actuators required for the equipment/valves/dampers shall be in the contractor's scope. Complete Civil works, structures, foundation required for all the equipment etc. is included in the contractor's scope of work. The contractor shall also include all supporting and structural works, like pipe trestles, platforms, staircases in their scope of work.
1.02.00	The scope of supply identified for FGD system here are minimum requirements and unless specifically excluded from the contractor's scope in sub-section-V (Terminal Points and Exclusions), any equipment/system not included in this specification but integral to the system offered by the contractor to meet the intent of this specification, shall also be included in the scope of the contractor.
1.03.00	The FGD system shall have an independent absorber for each unit and two (2) nos of Booster fans each unit shall be provided in downstream of ID fans capable of handling the pressure drop in the FGD system, ducting, Selective Catalytic Reactor (SCR) (in Employer's Scope) and maintain required chimney inlet pressure. Contractor shall provide a common limestone milling systems for the three (03) units and common gypsum dewatering system for the three (03) units. The contractor shall also supply an auxiliary absorbent tank, common for the three (03) units, for storage of absorber slurry of one unit. The contractor's scope shall include the absorbers, common limestone grinding system and gypsum dewatering system.
1.04.00	The scope of the contractor for FGD system shall include all items as shown in Tender drawings 4410-109-POM-A-005/0006/007 (3 sheets). All ducting, dampers, expansion joints, pumps, valves, supports, structures etc. as required for completeness of system of absorbers, common limestone grinding system & common gypsum dewatering system shall also be in the scope of the contractor.
2.00.00	**SYSTEM DESCRIPTION**
2.01.00	The FGD system shall be based on Wet Limestone Forced Oxidation process. Each unit shall be provided with an independent absorber. Each FGD system shall be provided with separate Low height wet Stack.
2.02.00	Flue Gas from Boiler shall be tapped off to FGD system after ID fan outlet duct (terminal point indicated in the tender drawing). Bidder shall make opening in the existing duct at ID Fan outlet duct at the terminal point and connect to the booster fan inlet ducting. Flue gas from ID fan discharge to absorber inlet shall be taken through booster fan. Treated gas from absorber outlet duct shall be led to wet Stack. In the absorber, SO_2 in flue gas shall be removed by a spray of recirculating slurry,

	pumped by slurry recirculation pumps. Alternatively, the gas shall be bubbled through the absorber slurry to remove the SO_2 from flue gas. Only proven system supplied earlier by the FGD vendor shall be supplied by the contractor.
2.03.00	Compressed oxidation air shall be blown through the slurry in the oxidation tank, to oxidize the Calcium sulfite to gypsum. The oxidation system may be either grid sparge type or lance jet type or Jet Air Sprager or any other proven system as per the practice of the FGD vendor.
2.04.00	Clean gas from the absorber shall be taken to the wet stack through three stage mist eliminators. Treated flue gas from the absorber shall be discharged through a 150 m Low height wet stack in contractor's scope as envisaged in the specification. Provision shall be made for facilitating operation of unit with FGD bypass like bypass damper etc., This shall also facilitate the online maintenance of absorber system and associated equipments. Provision shall be made for isolation of the flue gas flow through the absorber and also for bypass of the absorber, to allow maintenance of the absorber with the unit in operation.
2.05.00	Limestone to the absorbers of the three (03) units shall be supplied by a wet limestone grinding system, common for the three (03) units. Limestone conveyor shall feed the Limestone day silos which in turn shall feed the Limestone wet ball mill through a gravimetric feeder. The classified limestone slurry from the mills shall be stored in two (02 no) limestone slurry storage tanks to be provided by the contractor, from where the slurry shall be pumped to the individual absorbers by dedicated limestone slurry pumps.
2.06.00	The gypsum from the three (03) absorbers shall be pumped by dedicated gypsum bleed pumps to a common Gypsum Dewatering system consisting of two streams (2x100%) of primary and secondary hydrocyclone and vaccum belt filters for gypsum dewatering. The water removed from the absorber shall be recycled to the absorbers. The waste water from the system shall be collected and neutralized using lime and neutralized effluent shall be pumped at required pressure to waste water terminal point as indicated in Sub-section IV, Part A of the Technical Specification. Contractor shall provide complete automated waste water neutralization system along with automated lime feeding and dosing system to ensure required pH of waste water is ensured before being discharged at the terminal point. Washed and dewatered gypsum from the dewatering system shall be fed to a belt conveyor. The contractor shall discharge the gypsum cake above the Gypsum handling belt conveyor.
2.07.00	A common auxiliary absorbent tank shall be provided for storage of absorber slurry of one absorber along with slurry pumps for pumping the slurry back to any of the absorber.
3.00.00	**LIMESTONE GRINDING AND SLURRY PREPARATION SYSTEM (COMMON FOR THREE (3) UNITS)**
3.01.00	The contractors scope shall include a common limestone grinding system for the Three (03) units and shall comprise of:
3.01.01	2X100% Limestone storage silos each having minimum 24 hours storage capacity equivalent to the requirements of 3x660MW. The storage silo shall be complete with supporting steel structure, platforms, staircase, air canons, power operated gates, gravimetric feeders, level switches, air relief devices, etc.
3.01.02	2x100% wet horizontal ball mills with each mill sized to meet 110% of the maximum

	total limestone requirement of three (03) units at Design point.
3.01.03	Two (2) limestone slurry tanks, each tank sized to meet 12 hrs total limestone slurry storage requirement for two units at Design point, complete with all accessories and Agitator(s).
3.01.04	2x100% limestone slurry pumps for each absorber connected to each of the limestone slurry tank (total 6 nos. of pumps for 3x660 MW). Each pump catering to slurry requirement of each unit's absorber.
3.01.05	Limestone slurry piping to each absorber, along with recirculation lines, all isolation and control valves.
3.01.06	Each mill shall be fed from an independent Limestone bunker. Each mill shall be complete with the following items, as a minimum requirement: i. A bunker outlet gate ii. A gravimetric limestone feeder along with its drive and all other auxiliaries iii. 1 no. separator tank with agitator(s). iv. 2x100% Mill circuit pump. v. 1 set of hydro-cyclone vi. A peripheral/central drive system with motor, speed reducer gearbox and other auxiliaries. vii. An auxiliary motor for inching operation with speed reducer. viii. Complete lubricating system with appropriate lubricating medium storage facility (i.e. 1 no. lube oil tank for storage of lube oil and/or 1 no. grease storage drum as required). ix. Lube oil pumps, coolers, duplex oil filters, connecting piping and necessary load & remote indicating instruments. Each lube oil pump and cooler shall have a 100% identical stand-by.
3.01.07	All connecting pipes / chutes along with necessary valves between various systems of the mill and from hydro-cyclone to common slurry storage tanks shall also be in the scope of the contractor. Necessary pipes, pipe supports, trestles etc. as required for the routing of the pipes shall be under the contractor's scope. Any item not included above but necessary for safe and reliable operation of the milling system proposed by the contractor shall also be in the contractors' scope.
3.01.08	The complete Limestone Grinding System shall be installed inside a building to be provided by the Contractor as per specifications specified elsewhere. The building must be complete in all respect specially facilitating the smooth operation and maintenance of associated equipment's of above systems by providing adequate maintenance space, handling facilities, walkways, staircase & one (1) number passenger cum goods elevator of minimum capacity of 1000 kgs for easy access & movement of man/materials. etc. The building shall be sufficiently ventilated.
4.00.00	**ABSORBER SYSTEM**
4.01.00	An independent Limestone Forced Oxidation (LSFO) type absorber system shall be

	provided for each unit. Each absorber system shall be complete with :
4.01.01	Absorber tower complete with re-circulating slurry spray header(s) and nozzles, three stage mist eliminators, wash water nozzles, oxidation tank integral to tower, oxidation headers and nozzles, and agitators and all internal systems integral to the working of the absorber.
4.01.02	2x100% re-circulating slurry pump for each level of spray. Alternately, the contractor may offer a spare level of spray with each spray level served by an independent 100% pump. In case the contractor offers a single level of spray, one number of standby pump of the same capacity & head as the working slurry recirculation pumps shall be provided. (In case the bidder offers an absorber with gas bubbling through the slurry, the complete gas distribution system to the slurry shall be in bidder's scope. No re-circulating pump and spray header and nozzles shall be required in such case. In such a case additional pressure drop (if required) shall be considered in the sizing of the two (2) nos. of Booster fans, which shall be provided by the Contractor downstream of the ID fans, for each unit, capable of handling the pressure drop in the FGD system & ducting & SCR (in employer scope) and maintain required chimney inlet pressure)
4.01.03	Complete Ducting System for FGD plant from the terminal points in the flue gas duct after ID fan discharge to Booster fan inlet to absorber tower & from absorber tower to ducts connecting to wet Stack. Guillotine gates shall be provided at the inlet & outlet of the each Booster fan. One (1) no FGD by pass gate shall be provided in the existing duct connecting to existing chimney.
4.01.04	2x100% Centrifugal/ positive displacement type oxidation blowers / compressors.
4.01.05	1 No. Emergency water tank for spraying water at inlet of Absorber for upset condition.
4.01.06	All connecting piping and valves required by the system.
4.01.07	2x100% gypsum bleed pumps.
4.01.08	Piping from gypsum bleed pumps to gypsum dewatering system, along with recirculation lines (if required) necessary isolation and control valves.
4.01.09	Routing of the duct/piping system complete with supports, structures, trestles, absorber platforms, as required shall be in the contractor's scope of supply.
4.01.10	Passenger cum Goods elevator for each Absorber of minimum capacity of 1000 kgs.
4.01.11	All Slurry re-circulating slurry pumps & Oxidation blowers / Compressors shall be installed inside a building to be provided by the Contractor as per specifications specified elsewhere. All pumps & Oxidation blowers / Compressors shall be in straight line. The building must be complete in all respect specially facilitating the smooth operation and maintenance of associated equipment's of above systems by providing adequate maintenance space, handling facilities, walkways, staircase etc. The building shall be sufficiently ventilated.
5.00.00	**GYPSUM DEWATERING SYSTEM**
5.01.00	The employer envisages a common gypsum dewatering system for the two (2) units.

	The common dewatering system shall receive the gypsum slurry from each absorber through slurry feed pipes and shall comprise of two (2) sets of dewatering equipments.
5.02.00	Each set (suitable for handling /dewatering of one unit) of dewatering equipment (01 working set + 01 standby set) shall comprise of the following items as a minimum requirement: i. One set of primary hydro-cyclones ii. One vacuum belt filter iii. One no. vacuum receiver iv. One no. vacuum pump v. One set of secondary hydro-cyclones vi. Complete piping and valves for the system along with wash water line.
5.03.00	This system shall be comprising of 2x100% gypsum dewatering system with each stream sized to dewater 110% of the maximum gypsum produced by 3x660 MW units operating simultaneously at 100% BMCR, with any coal fired from the specified range of coals (whichever gives the maximum gypsum flow). All other stipulations with respect to sizing and design of the dewatering system, auxiliaries and other systems shall be in line with this specification.
5.04.00	The filtrate water from belt filter dewatering and wash water from washing system and the under flow from the secondary hydro-cyclone shall be taken to a common filtrate water tank. 2x100% pump shall be provided to supply wash water (for cake washing as well as belt cloth washing) to the belt filters. In addition, 2x100% Filtrate water pump (common for all units) shall be provided to recycle the filtrate to the absorber. The contractor shall include the necessary piping and valves in their scope.
5.05.00	The overflow from the primary set of hydro-cyclone shall be taken to a common Secondary hydrocyclone feed tank. 2x100% Secondary hydrocyclone pumps shall be provided to feed 2x100% secondary hydro-cyclones. The underflow from the primary hydro-cyclone shall be fed to the 2X100% vacuum belt filter system.
5.06.00	The under flow from the secondary hydro-cyclone shall be taken to the filtrate water tank. The over flow from the secondary hydro-cyclone shall be taken to a waste water neutralization system to be provided by the Contractor. The waste water system shall be complete with lime feeding & storage system, neutralization tank, waste water tank, 2x100% waste water pumps along with complete piping, instrumentation, valves, piping support etc. to discharge waste water at required pressure to waste water terminal point as indicated in Sub-section IV, Part A, Section VI of the Technical Specification. All the piping with supports, trestles as required shall be in the contractors' scope. The contractor shall also include any other item not included above but necessary to make the system complete.
5.06.01	The complete Gypsum Dewatering System shall be installed inside a building to be provided by the Contractor as per specifications specified elsewhere. The building must be complete in all respect specially facilitating the smooth operation and maintenance of associated equipment's of above systems by providing adequate maintenance space, handling facilities, walkways for easy access & movement of man/materials etc. The building shall be sufficiently ventilated.

6.00.00	**AUXILIARY ABSORBENT TANK**
6.01.00	The contractor shall provide a common auxiliary absorbent tank, common for the three (03) units, of sufficient capacity for storage of absorber slurry of one unit.
6.02.00	The contractor shall provide 1x100% slurry pumps for pumping the slurry back to the absorber of any of the units in 8 hrs (max.). All agitators, piping, valves, fittings and other structures required for the system shall be included in the scope of the contractor.
7.00.00	**SUMP & SUMP PUMPS**
7.01.00	The contractor shall provide sumps of adequate capacity in each of the following area: A. Each Absorber Area B. Limestone Grinding system C. Gypsum dewatering system Waste water which might be generated during flushing and cleaning procedures of the equipment shall be collected in the sump and shall possibly be reused in the wet absorber.
7.01.02	The contractor shall provide agitators and sump pumps of required capacity in each of this area along with necessary pipes, isolation / control valves etc for pumping back the water in the sump into the respective system. The Interior surface of the Sumps shall be lined with replaceable chlorobuty/bromobutyl rubber lining of minimum 5 mm thickness.
8.00.00	**Elevator**
8.01.00	One (1) number passenger cum goods elevator of minimum capacity of 1000 kgs for each Absorber **(to be provided in case height of absorber is higher than 20m)** and One (1) number passenger cum goods elevator of minimum capacity of 1000 kgs in Limestone Grinding System Building shall be provided for easy access & movement of man/materials.
8.02.00	The scope shall include all items / accessories, service along with all electrical equipment etc. required to meet all design, installation, operation, safety, protection and other requirements of IS: 14665 (latest edition) (all parts), 'Lift' and service lifts'. This scope shall include all items / devices needed to comply with the requirements indicated elsewhere in the specification. The scope shall include provision of fireman's switch.
8.03.00	One (1) nos. adequately sized, Air conditioners each having minimum cooling capacity of 2.5 Ton shall be provided for each elevator machine room to make it dust proof.
8.04.00	Complete erection, testing and commissioning including all testing and commissioning materials, consumables and other tools and tackles required for erection.
8.05.00	To obtain necessary local administration permits / approvals and make arrangements for inspection and tests required thereby.

9.00.00	**Thermal Insulation, Lagging, Cladding & Refractories**
	Thermal Insulation alongwith aluminum cladding, lagging, reinforcement wiremesh, cleats and supports, shall be provided for all the equipments/surfaces having skin temperature more than 60 degree Celsius. The insulation thickness shall be designed based on criteria specified in Part-B, Section-VI.
10.00.00	**Buildings**
10.01.00	Contractor shall provide buildings for Limestone Grinding System; Slurry re-circulating pumps & Oxidation blowers / Compressors; Gypsum Dewatering System & FGD control room & Analyser room (if required). The buildings must be complete in all respect specially facilitating the smooth operation and maintenance of associated equipments of above systems by providing adequate maintenance space, handling facilities, walkways, staircase etc.
10.02.00	Contractor shall provide air conditioning for the FGD control room and Analyser room (if separately provided) & ventilation for the FGD system buildings as detailed in Sub-Section III-A2.
11.00.00	Contractor shall provide Corrosion protection painting for structures & equipments as described in the specification
12.00.00	Contractors scope shall include all Platforms, walkways, staircase, safety rails for access of each equipment, valves, dampers, gates, instruments etc. handling facilities adequately each component of FGD system.
13.00.00	The contractor scope shall also include the provision of FGD trestle for routing of air & water lines, slurry lines, steam line, waste water, etc.. required for the complete process operations.
14.00.00	The scope of civil works shall be as per Sub-Section-III D.
15.00.00	Associated Electrical and Control & Instrumentation systems for FGD as detailed in Sub-Section-IIIB & Sub-Section-IIIC respectively of Part-A/Section-VI of this specification.
16.00.00	**Booster Fan & Isolation Gates**
16.01.00	For each unit, two (2) nos. Booster Fans of axial type, Constant speed, variable pitch controlled each with drive motor, base plates, foundation bolts and nuts, inlet box, discharge case, coupling, coupling guard and suitable arrangement to prevent rain water entry to fan motor. Each Booster Fan shall be provided with bearing lubrication and hydraulic blade pitch control unit(s) consisting of (1) 2x100% oil pumps each with motor, coupling and coupling guard. (2) 2x100% oil coolers. (3) 2x100% filters, differential pressure switches, etc. (4) One (1) oil storage tank. (5) Instrumentation, vibration monitoring, inter connected piping, valves and fittings including pressure relief valves and non return valves.

	(6) Electrical actuator with accessories etc.
	Alternatively, a forced oil lubrication system (consisting of 1to 6 above) common to bearing lubrication and for servo motor operation to each BF Fan will also be acceptable.
	At least two (02) nos. of duplex thermocouples or duplex platinum RTDs (100 ohm at 0°C) and one no. of temperature indicators shall be provided for bearing metal temperature measurement, control and monitoring.
	Booster fans shall be suitable for the type of foundation being provided.
16.02.00	Motorized Guillotine type gates with 2x100% seal air fans shall also be provided at suction & discharge of each Booster Fan. The Gates shall be designed for tight shut-off. The design of the gates shall ensure 99.95% leak tightness without seal air. The gates shall be 100% leak tight with seal air fans under the above conditions.
17.00.00	Contractor shall provide separate air receivers of adequate capacity for meeting the instrument and service air requirements. In case higher pressure/flow requirements are envisaged for instrument & service air Contractor shall make its own arrangement.
18.00.00	**Wet Stack Condensate Collection System**
18.00.01	Wet stack of 150 metre height shall be provided with a stack condensate collection system to avoid the carryover of the condensate/acidic dews/water droplets/Gypsum coming out of the stack. Design of the wet stack condensate system should be such that all the condensate are collected in the stack itself and no water droplet/condensate come out of the chimney and preventing falling of the acidic dews/water droplet/gypsum from the chimney in the plant/nearby area.
18.00.02	Drain piping shall be of suitable material from corrosion point of view.
18.00.03	All Stack liquid collection shall be easily accessible for O&M.
18.00.04	The design of the stack condensate collection system shall be provided by the bidders in its bid.
18.00.05	A common Nickel based alloy material storage/neutralizing tank for the both the units of storage capacity of 12 hrs of stack condensate of both the stack shall be provided. Storage tank/neutralization tank shall be complete with dosing, mixing and preparation system. After neutralization of the stack condensate collection, same shall be pumped to common drain system. Contractor shall provide 2 X100% pumps, complete with valves, piping fittings, level control/monitoring etc. Alternatively, bidder may propose its proven system for disposal of the condensate system in its bid for Employer's consideration. All the material in contact with the condensate shall be of suitable material for the operating duty.
18.00.06	Stack outlet liquid collector shall be designed in such a way so that the liquid condensate film near the exit of the stack is collected instead of carrying with the exit gas. Bidders shall provide all these details in its bid.

SUB-SECTION-III-A2

LIME STONE & GYPSUM HANDLING SYSTEM

1.00.00 SYSTEM DESCRIPTION

1.01.00 LIMESTONE HANDLING PLANT

This shall be read in conjunction with Limestone Flow Diagram and the Limestone layout enclosed elsewhere in the specification.

ROM Limestone of (-) 250 mm size shall be delivered to North Karanpura power plant by trucks. The Limestone shall be unloaded in underground RCC hoppers by means of self-tippling trucks and shall be conveyed though a series of conveyors for further crushing, conveying/storage etc. Alternatively, Bidder may provide complete Truck unloading system comprising of of Bulk material receiving unit and Surface feeder.

(i) Two (2) no. Truck Hoppers (TH-1 &2) each having 60 Ton capacity along with apron feeders (AF-1 & AF-2) shall be provided to unload limestone from self tippling trucks. Apron feeders receiving Limestone from TH-1, TH-2, shall drop coal on to conveyors 1 A/B .Each Apron feeder shall be of 75 MTPH rated capacity. The rated capacity of conveyor 1A/B shall be 150 MTPH.

Alternatively two numbers bulk receiving unit along with surface feeders etc. each rated for 75TPH capacity shall be provided. The feeders shall feed to conveyor 1A/B located at ground level.

(ii) Conveyors 1 A/B shall feed to Limestone to Crusher house via Pent House (if applicable). Suspended magnets (SM-A, SM-B) shall be provided on Conveyors 1 A/B at Pent House for removal of tramp Iron pieces. Metal detectors MD-1 and MD-2 shall be provided on Conveyors 1A/1B to detect non-magnetic metallic materials present in the “as received” limestone. Two (2) numbers Belt Scale (BS-1& BS-2) shall also be provided, one on each Conveyor 1A and 1B for measurement of Limestone flow rate. Inline magnetic separators (ILMS-1 & ILMS-2) shall be mounted at the discharge end of Conveyor 1A/1B to remove tramp iron pieces. Limestone sampling unit (LSU) shall be provided to sample the limestone of (-) 250mm size. Further, a passenger cum goods elevator (EL) as specified elsewhere shall also be provided.

(iii) In Crusher house, Limestone from incoming Conveyor 1A will pass through dedicated Vibrating Feeder (VF-1) and dedicated Crushers (CR-1). Similarly Limestone from incoming Conveyor 2B will pass through dedicated Vibrating Screening Feeders (VF-2) and dedicated Crushers (CR-2) respectively. Each dedicated stream shall have a set of Rod gate and Rack & Pinion Gate before Vibrating Feeder. The dedicated Limestone flow stream shall permit maintenance of equipment, hoppers and chutes in one stream without affecting the operation of other stream.

(iv) Each Vibrating Feeder shall be of 150TPH rated capacity. Each crusher shall be of 150 MTPH rated capacity which shall crush limestone to (-) 20mm size.

Crushed limestone shall drop on Conveyor 2A/B.

(v) Conveyor 2A shall feed limestone to Stacking conveyor 3A or Conveyor 5A at Junction House (JH-1). Conveyor 2B shall feed limestone to Stacking conveyor 3B or Conveyor 5B at Junction House (JH-1).

(i) Stacking Conveyor 3A/B will drop limestone to overground storage hopper provided within a shed via travelling trippers. One (1) number Traveling Tripper is mounted on each of the Stacking Conveyor 3A/B. The storage Capacity of Limestone Storage hopper shall be sufficient to store Limestone for minimum 10 days consumption considering all units at full load.

(vi) Two (2) number paddle feeders (PF-1, PF-2), each of 150 MTPH rated capacity shall be installed below ground to reclaim the stored limestone and feed to underground conveyors 4A/B. Conveyor 4A/B shall drop limestone on to Conveyor 5A/B at Crusher house.

(vii) Conveyors 5A/B shall drop limestone in to Limestone Silos of FGD System through fixed Tripper on the first silo in the path. Alternatively diverter Plough is also acceptable in place of fixed tripper.

1.02.00 GYPSUM HANDLING PLANT

(ii) Dewatered Gypsum discharged from the vacuum belt filter shall be taken by Conveyor 6A/B to the storage shed. The storage shed shall be sufficient to store gypsum equivalent to gypsum generation of minimum 7 days (Generation of all three units to be considered).

(iii) One number of motorized travelling tripper on each of conveyor 6A/B shall drop the gypsum to the storage shed.

(iv) A truck loading bay shall be provided for loading the Gypsum to user's truck by employer.

2.00.00	**DETAILED SCOPE**
2.01.00	**LIMESTONE HANDLING PLANT**
2.01.01	Two (2) numbers Truck unloading system for unloading of limestone from trucks complete with drives, accessories all mechanical, electrical civil & structural works, including enclosure for dust containment during unloading. The truck unloading system shall comprise of either of the following (a) Two number underground RCC Truck hoppers (TH1 & TH2), each of 60 ton capacity, along with access ramp for trucks, grating, dust enclosure etc. Clear access shall be provided for movement of pay loaders/ bulldozers on the paved area and on the hopper grating in order to remove the oversized limestone. Gratings with 300mm X 300mm clear openings over unloading hopper shall be placed and designed accordingly. (b) Two number bulk receiving units for ROM Limestone of size (-)250 mm each rated for 75TPH along with access ramp as required, receiving hoppers/box feeder/surface feeder, dust enclosure etc. The units shall be complete with drives, accessories all mechanical, electrical civil & structural works
2.01.02	Two (2) nos. Apron Feeders along with dribble conveyor complete with drives including all accessories, electricals, supporting structures, approach/ maintenance platform and associated civil & structural works etc. (Apron Feeders along with Dribble conveyors shall not be applicable in case Bidder opts Option b above)
2.01.03	Conveyor 1A/B complete with tunnel, pent house, conveyor galleries, conveyor supporting structures, short supports, stringers, deck plate, seal plate, conveyor foundations, drive motors, drive units, pulleys, idlers, gravity take ups including guides, pits etc., internal and external belt cleaners, pull chord switches, belt sway and zero speed switches, electro-hydraulic thruster brakes, all electrical etc. including all civil, structural and architectural works for conveyor gallery, gallery supporting trestles and their associated foundations. (Tunnels along with Pent house shall not be applicable in case Bidder opts Option b, however scope shall include seal plates for conveyors and all civil, structural and architectural works for conveyor gallery, gallery supporting trestles and their associated foundations.)
2.01.04	Conveyors 2A/B complete with conveyor supporting structures, short supports, stringers, deck plates, conveyor foundations, drive motors, drive units, pulleys, idlers, take-ups, take-up structure, internal and external belt cleaners, pull chord switches, belt sway and zero speed switches, electro-hydraulic thruster brakes, all electrical, etc. including all civil, structural architectural works and their associated foundations.
2.01.05	Stacking conveyors 3A/B complete with conveyor supporting structures, short supports, stringers, deck plates, conveyor foundations, drive motors, drive units, pulleys, idlers, take-ups, take-up structure, internal and external belt cleaners, pull chord switches, belt sway and zero speed switches, electro-hydraulic thruster brakes, all electrical, etc. including all civil, structural architectural works and their associated foundations.

2.01.06	Reclaim Conveyors 4A/B complete with tunnel, pent house, conveyor galleries along with its supporting structures, short supports, stringers, deck plate, seal plate, conveyor foundations, drive motors, drive units, pulleys, idlers, gravity take ups including guides, pits etc., internal and external belt cleaners, pull chord switches, belt sway and zero speed switches, electro-hydraulic thruster brakes, all electrical etc. including all civil, structural and architectural works for tunnel, conveyor gallery, gallery supporting trestles and their associated foundations.
2.01.07	Conveyor 5A/B complete with tunnel, pent house, conveyor galleries, conveyor supporting structures, short supports, stringers, deck plate, seal plate, conveyor foundations, drive motors, drive units, pulleys, idlers, gravity take ups including guides, pits etc., internal and external belt cleaners, pull chord switches, belt sway and zero speed switches, electro-hydraulic thruster brakes, fixed tripper or diverter ploughs, all electrical etc. including all civil, structural and architectural works for conveyor gallery, gallery supporting trestles and their associated foundations.
2.01.08	Junction House JH-1 complete with all civil, structural, architectural and electrical works including chutes, monorails, hoists/chain pulley blocks, hoist maintenance platforms, external staircases, dust debris chutes etc. JH-1 shall be provided with removable chequered plate covers over openings in machinery hatches for handling under ground equipment.
2.01.09	One (1) number Lime stone crusher house (CH) complete with all civil, structural, architectural and electrical works etc accommodating two numbers crushers and associated Vibrating Screening feeders, R&P and Rod gates etc., passenger cum goods elevator, conveyors, chute work along with actuator operated flap gates, monorails & hoists, hoist maintenance platform, external and internal staircases, hand rails and other equipments such as sampling unit, dust extraction system etc. as specified elsewhere.
2.01.10	Two (2) numbers of vibrating feeders of 150TPH rated capacity in limestone crusher house to feed the limestone to crushers with drives, dust hoods, all mechanical, electrical accessories and supporting structures etc.
2.01.11	Two (2) numbers of hammer mills of 150TPH rated capacity each for crushing limestone complete with drives, accessories all mechanical, electrical civil & structural works, including crusher supporting foundations, vibration isolation system with springs and viscous dampers, vibration monitoring system etc.
2.01.12	Two (2) sets of gates each comprising of one number of rod gate and one number of actuator operated rack and pinion gate at inlet of each of the vibrating screen feeder feeding limestone to crushers complete with drive, all mechanical, electrical, structural works, etc.
2.01.13	Complete chute work along with chute block switches and actuator operated flap gates in all junction houses and crusher house between various conveyors.
2.01.14	Two (2) numbers motorized travelling trippers each of 150TPH rated capacity on conveyor 3A/B for feeding the crushed limestone to the overground storage hopper. Trippers shall be complete with all mechanical, electrical equipment, rails, chute work, rail supporting structure (along with structural stools, as required), cables with cable festooning arrangement, thruster brakes, rail clamps, electric hoist, actuator flap gates etc.

2.01.15	Crushed limestone overground storage hopper along with machinery hatches at each of end of limestone storage shed, reclaim conveyor tunnel and pent house, complete with civil, structural, architectural and electrical works including over ground structural shed for entire length of limestone ground storage and machinery hatches, removable chequered plate covers over openings in machinery hatches for handling underground equipment like paddle feeders etc, other equipment such as DE system, ventilation system, drinking water system, drainage system etc. as specified elsewhere in the specification.
2.01.16	One number of covered storage shed for crushed limestone storage hopper including civil, structural, architectural & electrical works.
2.01.17	Two (2) numbers paddle feeders each of 150TPH rated capacity complete with all electricals, rails, supporting structures, end stops, cable reeling drums, trailing cables, and necessary arrangement for cabling below the limestone storage hopper along with all accessories for reclaiming the limestone from storage hopper.
2.01.18	Two numbers limestone sampling units one each for conveyors 1A/B & 5A/B for sampling of as received limestone and crushed limestone being fed to the FGD System complete with all accessories and electrical, civil, structural works, supporting structures, approach/maintenance platforms etc.
2.01.19	Minimum four (4) Nos. sump pumps in limestone storage shed, and two (2) Nos. sump pumps in JH-1 complete with motors, local control panel, level switches, individual discharge piping with fittings and valves to nearest plant drain including pipes etc. upto disposal point.
2.01.20	Complete ventilation system comprising of Supply and exhaust fans along with required ducting for ventilating the below ground portion of various buildings, tunnels of Conveyors, and limestone bunker bays complete with accessories all mechanical, electrical, civil and structural works and associated foundations. Exhaust fans shall be provided for all battery rooms and all toilets complete with electrical, civil & structural works etc...
2.01.21	Pressurized Ventilation system for all Switchgear rooms, MCC rooms complete with all mechanical, electrical, accessories, civil and structural works.
2.01.22	One (1) number of passenger cum goods elevator with drives, all electrical, mechanical, civil, structural & associated foundation works, accessories and electrical to serve various floors of limestone crusher house.
2.01.23	Two (2) numbers of in line magnetic separators on conveyors 1A/B and two (2) number of suspended magnets on each conveyor 1A/B complete with handling arrangement, reject chutes, reject trolleys, supporting arrangement and all mechanical, electrical, civil, structural works and accessories.
2.01.24	Two (2) numbers of metal detectors on conveyors 1A/B complete with all mechanical, electrical, civil, structural works and accessories.
2.01.25	Four (4) numbers of electronic type belt scales on conveyors 1A/B & 5A/B for continuous weighing, complete with all mechanical, electrical, civil, structural works and accessories.
2.01.26	Complete dust extraction system for control of fugitive dust in limestone storage shed, junction towers, crusher house complete with fans, drives, bag filters, hoppers,

	hoisting arrangements, ducting, piping, valves etc. electrical, accessories, civil, structural and architectural works.
2.01.27	Service water, cooling water and potable water system for complete limestone handling plant including Pumps ,drives, sumps, piping etc and all mechanical, electrical and civil works.
2.01.28	Monorails and electrically operated hoist blocks as well as hand operated chain pulley blocks for servicing/installation/easy replacement of drive machinery, different types of pulleys for all conveyors, GTU and other equipment from ground level to their locations and vice-versa & landing inside the respective Buildings.
2.01.29	All buildings shall be complete with all electrical, civil, structural, architectural works, cable trenches, fire safety walls, foundation, earth mat, fencing, earthing for transformers. All cables, duct banks, trenches, cable trestles shall be complete with associated civil/ structural work and necessary civil foundations.
2.01.30	Drainage of LHP buildings, tunnels, conveyor galleries and limestone storage shed including all civil & structural works as detailed out elsewhere in the specification.
2.01.31	All equipment/fittings, supporting structure, along with insert plates, bolts, accessories, MS sleeves, base plates, grouting as may be required and proper alignment etc.
2.01.32	Complete unused set of all special tools and tackles, which are necessary or convenient for erection, commissioning and overhauling of any equipment, covered under the scope.
2.01.33	Preservative shop coating, final painting of all structures and equipment.
2.01.34	All inserts, anchor bolts, foundation bolts for Contractor's equipment, platforms etc. in the entire LHP.
2.01.35	All necessary grouting & finishing of the floor after welding at all such pockets & elsewhere is in Contractor's scope.

□.00.00 **DETAILED SCOPE**

□.01.00 **GYPSUM HANDLING PLANT**

a. Gypsum shall be conveyed from the vacuum belt filter discharge to the storage shed through conveyors 6A/B of 150 TPH rated capacity.

b. One number of covered storage shed for gypsum complete with all mechanical, electrical & civil works including floors for tripper and at ground level and truck bay

c. Conveyors 6A/B complete with conveyor supporting structures, short supports, stringers, deck plates, conveyor foundations, drive motors, drive units, pulleys, idlers, take-ups, take-up structure, internal and external belt cleaners, pull chord switches, belt sway and zero speed switches, electro-hydraulic thruster brakes, all electrical, etc. including all civil, structural architectural works and their associated foundations.

d. Two numbers (02) motorized travelling tripper on conveyors 6A/B for feeding the gypsum to the storage shed. Trippers shall be complete with all mechanical, electrical equipment, rails, chute work, rail supporting structures (along with structural stools, as required), cables with cable festooning arrangement, thruster brakes, rail clamps, electric hoist, actuator flap gates etc.

e. Minimum four (4) Nos. sump pumps in gypsum storage shed complete with drives, accessories, local control panel, level switches, individual discharge piping with fittings and valves to settling pit.

f. Complete dust suppression system for control of fugitive dust in gypsum storage shed complete with pumps, water sump, drives, accessories handling arrangements, piping, valves and all electrical, civil and structural works.

g. Service water and potable water system for complete gypsum handling plant including Pumps, drives, sumps, piping accessories and all mechanical, electrical and civil works.

h. Exhaust fans for ventilation for gypsum storage shed complete with drives, accessories and all electrical, civil & structural works

SUB-SECTION-III-A3

PLANT UTILITIES

1.00.00 **AIR CONDITIONING SYSTEM**

a) General

The scope includes Engineering, Supply, Construction, Erection, Testing and Commissioning for Complete Air conditioning system consisting of D-X units with refrigerant piping & valves, Air handling units, Hi-wall split air conditioner /Cassette Air conditioners, Packaged Air Conditioners, Fresh air fans, air distribution system (ducting, filters, isolation dampers, motorized fire dampers, diffusers, grills, volume control dampers, etc.) etc., along with all electrical equipment and instrumentation as required for all the buildings which are in the scope of the bidder, as detailed out in Part-B of Section-VI.

b) **Air-conditioning system for F.G.D Control Room Building**

Air cooled condensing units (D-X type) type air conditioners with AHU of suitable capacity with 100 % redundancy (as per actual heat load calculation) shall be provided for FGD Control room building.

c) SO2 analyzer room (if required) and other air conditioned offices/areas covered under this package shall be provided with Ductable/Non ductable Split air conditioners. Non ductable Split air conditioner shall conform to minimum three (3) star (***) rating and above of latest version of Bureau of Energy Efficiency (BEE) HVAC code issued by Ministry of Power, Govt of India.

d) Supply of Mandatory spares as specified.

e) Any additional items required to make the system complete.

f) For Air conditioning system, the Bidder shall provide all Instrumentation systems, accessories and associated equipment, which are included in Bidder's scope, in a fully operational condition acceptable to the Employer. The Bidder shall also provide all material, equipment and services which may not be specifically stated in the specifications but are required for completeness of the equipment/systems furnished by the Contractor and for meeting the intent and requirements of these specifications.

g) Contractor shall provide microprocessor/PLC/GIU based control system for control and monitoring of air conditioning system as per manufacturer's standard practice. However relative humidity and temperature measurement of all control rooms and all major air-conditioned areas shall be made available in FGD control system. Control and monitoring of air conditioning system from FGD control system is also acceptable.

h) Apart from the above, any area/building which are in the scope of the bidder and require air conditioning, the same shall be provided with air conditioning system, as detailed out in Part-B of Technical Specification.

1.02.00 **Redundancies of equipments:**

100% standby unit shall be kept for FGD control room, SO2 analyzer room (if required) and other air conditioned offices/areas.

2.00.00 VENTILATION SYSTEM

a) **General**

The scope includes Engineering, Supply, Construction, Erection, Testing and Commissioning for Complete Ventilation system consisting of Modular type Unitary air filteration Units, Supply air fans, water pumps, exhaust air fans, louvers, filters, ducting, diffusers, piping, instrumentation etc., for all the buildings which are in the scope of the bidder, as detailed out in Part-B of Section-VI.

b) **F.G.D Control Room Building (Non-A/C areas)**

One (1) nos. of Evaporative type Unitary Air Filtration (UAF) unit (of metallic construction- modular type) of suitable capacity with all accessories, DIDW centrifugal fan (1 x 100%), circulating water pump (1 x 100%), etc. as detailed out in technical specification shall be provided.

c) **Miscellaneous areas:** All other areas like Limestone Grinding system building, Gypsum dewatering building, Recirculation pump & Oxidation blower/compressor building etc & all other non-air conditioned areas covered under this package shall be ventilated by a combination of supply/exhaust fans and fresh air in-take / back draft louvers. For ventilation of Battery rooms and Oil rooms, fans with flame proof motor shall be used. Further, toilets shall be provided with propeller type exhaust air fans.

d) Supply of Mandatory spares as specified.

e) Any additional items required to make the system complete.

f) For Ventilation system, the Bidder shall provide all Instrumentation systems, accessories and associated equipment, which are included in Bidder's scope, in a fully operational condition acceptable to the Employer. The Contractor shall also provide all material, equipment and services which may not be specifically stated in the specifications but are required for completeness of the equipment/systems furnished by the Contractor and for meeting the intent and requirements of these specifications.

g) Contractor shall provide microprocessor/PLC/GIU based control system for control and monitoring of ventilation system as per manufacturer's standard practice. Control and monitoring of ventilation system from FGD control system is also acceptable.

3.00.00 **General**

i. All associated Civil & structural work for air conditioning and Ventilation package.

ii. Set of commissioning spares as may be required during erection and commissioning.

iii. One (1) set Special tools and tackles required for maintenance of all the Mechanical, Electrical and C & I equipments under the scope of bidder.

iv. All steel / cast iron inserts, plates, bolts, nuts, sleeves, metallic-fasteners etc. to be grouted in concrete work and used to hold/ support the equipment/piping / ducting being supplied and erected under this specifications.

v. Any additional items required to make the system complete.

vi. Initial charge of all lubricants and grease, etc. Further, all consumables required for PG tests shall also be in Bidder's scope of supply. Grouting, dressing and final finishing of all foundations of various equipment, etc.

vii. Repairing and making good/ sealing of cutouts / openings in floors, roofs and walls, for executing the works under this system and making them water tight as directed by the engineer.

Corrosion protection painting for all equipments / items by Bidder as detailed in relevant clauses of technical specification.

4.00.00 **FIRE DETECTION AND PROTECTION SYSTEM:**

The scope includes Engineering, Supply, Construction, Erection, Testing and Commissioning for Fire Detection and Protection System for FGD area. Following system has been envisaged:

1.1 Hydrant System:

Complete hydrant system (pipe, hydrant valves, landing valves, water monitors, hoses, branch pipes and nozzles etc) for FGD area shall be provided as per TAC norms. Tapping for hydrant system shall be provided from nearby existing hydrant header.

1.2 HVW Spray System:

Automatic fire detection cum high velocity water spray system shall be provided for various transformers (having oil capacity 2000 liters or more) envisaged under this package. Tapping for HVW spray system shall be provided from nearby existing hydrant header.

1.3 MVW Spray System:

Automatic fire detection cum medium velocity water spray system for the various cable galleries envisaged under this package. Tapping for MVW spray system shall be provided from nearby existing Spray header.

1.4 Fire Extinguishers

Five numbers each type of Portable fire extinguishers consisting of water type, dry chemical powder type, CO2 type shall be provided in various facilities of FGD system.

1.5 Analogue addressable type Fire Alarm System / Annunciation Panels:

Analogue addressable type Fire Alarm System consisting of Multi sensor type detectors, Linear Heat Sensing Cable (LHSC) detector, cabling, junction boxes, instrumentation, Fire Alarm cum control panels, repeater panels, etc. for various areas/equipment as detailed out below:-

a) All MCC / switch gear room / Control room shall be provided with Multisensor type detectors.
b) All Conveyors and Cable Galleries shall be provided with Linear Heat Sensing Cable detectors.
c) All cable galleries shall be provided with Multisensor type detectors.

1.6 The Contractor is responsible for getting the complete approval of the system elaborated in this specification from TAC accredited professional(s).

1.7 If the contractor feels, it is necessary to include any other items, which, in his opinion, may be required to comply with TAC regulations, other than those indicated in the specification, the same shall also be supplied, erected and commissioned. Any amendments, modified rules to the latest TAC regulations till techno-commercial bid opening date should be considered by contractor to fulfill the above condition.

1.8 Successful contractor shall furnish complete hydraulic calculation.

1.9 Supply of complete mandatory spares as specified elsewhere.

1.10 Set of commissioning spares as may be required during erection and commissioning.

1.11 One (1) set Special tools and tackles required for maintenance of all the mechanical, electrical and C & I equipment under the scope of Contractor.

1.12 Any additional item/ equipment required to make the system complete.

1.13 Grouting, dressing and final finishing of all foundations of various equipment, etc.

1.14 Supply of structural supports for piping in trench and for above ground piping wherever applicable.

1.15 Supply & application of protective coatings and wrapping for buried pipes and pipes in RCC trenches, and painting for above ground piping, valves, pipe supports, etc. as detailed in technical specifications.

1.16 Excavation, preparation of bed, laying, backfilling with compaction of soil for all underground/buried piping. Also, breaking and re-erection of paving for buried piping (if any)

1.17 Preparation of necessary detailed drawings including schematics, layouts, isometrics, fabrication drgs, erection drgs, etc. as required and also development of "As Built Drgs".

1.18 Conductance of Performance and Guarantee test as per Standard Guaranteed test procedure given elsewhere in the specification.

1.19 All pylons required for transformers, shall be anchored to soak pit base slab of individual transformer, paved area outside soak pit, etc. using anchor fasteners of adequate capacity. Subsequent to fixing the pylons, lower part of pylon which would be within filled up gravel portion shall be encased with concrete by Employer for corrosion protection.

SUB-SECTION-III-A4

ECW SYSTEM

EQUIPMENT COOLING WATER SYSTEM

1.00.00 **SCOPE**

1.01.00 **E**quipment **C**ooling **W**ate**r S**ystem fo**r U**nit auxilia**r**ies

The Bidder shall provide common Equipment Cooling water system for three units with a closed circuit cooling system for cooling of the various auxiliaries of FGD system. The equipment cooling water system shall include the following and as detailed out in relevant sub section of Part-B of Technical Specification.

(a) 1x100% capacity DM cooling water pumps alongwith drives for each unit and one 1x100% common standby.

(b) 1x100 % capacity auxiliary circulating water pumps, alongwith drives for each unit and one 1x100% common standby.

(c) 2x100% capacity self-cleaning strainers on the secondary side

(d) 1x100% capacity of plate type heat exchangers for each unit and one 1x100% common standby.

(e) One Overhead DM water tank (ECW O/H tank).

(f) One no. Alkali (Sodium Hydroxide) preparation tank, agitator and motor, piping, valves etc.

(g) Induced Draft Cooling Towers (IDCT) -One (1) no

Cooling Towers shall be as per the system requirements and the specification requirements as specified in Part-B

(h) Piping from service water system to FGD system and IDCT make-up, piping for normal makeup to ECW tank from existing DM water transfer pump, piping for emergency makeup to ECW tank from condensate transfer pump and complete piping, fittings, supports, valves and specialties including instrumentation and electrical equipment as required and as specified for the system.

Notes **-**

a) Clarified water from Cooling Tower basin (cooling Tower specific to FGD system) shall be used as secondary cooling water. Cooling tower basin shall be elevated enough to provide flooded suction to ACW pumps.

b) Hot secondary water from the PHE's shall be fed back to Cooling tower through hot water pipe.

c) Make up connection to ECW overhead tank shall be provided from terminal point as specified in terminal points chapter. Necessary connections to be made by contractor.

1.02.00	**C□□□□□ □□□□ □ □□□r□□r□□□□□ □ □□□r□r□□ □ □□□r □□r FGD □□□□□□** Consumptive water/ process water for FGD system shall be provided from the raw water reservoir inside the plant. Complete raw water system from the reservoir upto the end consumption point includes the following: a) 2x 100% raw water pumps complete with valves, drives and accessories for FGD system of all the three units. b) Storage tank if applicable by FGD sytem. c) Complete piping, fittings, supports, valves and specialties including instrumentation and electrical equipment as required and as specified for the system. d) Handling facilities such as monorail hoists/gantry cranes as required. e) Butterfly valves, non-return valves at the discharge, recirculation pipe with Recirculation Butterfly valves for the above pumps. All pumps shall be as per system requirement and as specified in design criteria and Part-B of the specification and head to suit system requirement.
1.03.00	**C□r□□□d □ □□□r□S□r□□□□ □ □□□r** Clarified water shall be provided by existing service water pumps (Employers scope) at terminal point as specified in terminal points chapter. Necessary connections to FGD facilities shall be made by contractor.
1.04.00	Suitable chemical treatment program including scale/ corrosion inhibitor shall be provided to prevent scaling/ corrosion in the secondary cooling water circuit.

SUB-SECTION-IIIB

ELECTRICAL SYSTEM/EQUIPMENT

ELECTRICAL SYSTEM □EQUIPMENT

1.00.00 **GENERAL**

The Contractor's scope shall include design, engineering, manufacture, type testing, inspection & shop testing at supplier's works, packing, forwarding to site including customs clearance/ port clearance (if required), receipt and unloading, in plant transportation, handling and storage (preservation & conservation of equipment) at site, erection including associated civil and structural works, testing and commissioning of the Electrical equipment/ system and works indicated in this chapter. The scope includes all interface/ interconnections with the electrical systems under this contract as required and other systems mentioned elsewhere. Unless explicitly stated to be common for all the units, the Contractor shall provide all system/equipment for each of the units. The Electrical scope shall be as described briefly in the following clauses but not limited to it.

1.01.00 **MOTORS**

Motors along with couplings and coupling guards for all rotating auxiliaries covered under this package.

1.02.00 **HT□LT SWITCH GEAR**

HT and 415V Switchgear / Motor control centers(as shown in Electrical Single Line Diagram Drg No. 4410-109-POE-J-001) Busduct/ Cable (as applicable), distribution boards, AC/DC fuse boards, LDB, local emergency push button stations for all drives energized from MCC's under contractor scope and local motor starters(for ventilation fans) as required for plant and equipment in contractor's scope.

1.03.00 **DC SYSTEM**

B□□□r□ □□d B□□□r□ C□□r□□r

Lead acid plante type/ Nickel Cadmium batteries and Float cum boost chargers for plant and equipment in the scope of the contractor, as per system requirement. The DC system (Battery and Charger) shall be supplied to cater to various DC loads in the plant. The design and sizing criteria shall be as detailed out in the chapter B-0, Part-B of Technical specifications.

1.04.00 **TRANSFORMERS**

Transformers as per Electrical Single Line Diagram Drg No. 4410-109-POE-J-001 and system requirement, however bidder to provide complete sizing & selection criteria of Transformer's feeding Contractor's own systems.

1.05.00 **ELECTRIC ACTUATORS**

Electric actuators with integral starters along with associated accessories etc shall be supplied on as required basis for Valves / Dampers to meet the functional and the other specification requirements.

1.06.00 **CABLES □BUSDUCT**

All HT/ LT power & control cables required for connection between equipment/devices in contractors scope and cables / Busduct (as applicable) between employers and contractors equipment as per Electrical Single Line Diagram Drg No. 4410-109-POE-J-001).

1.07.00 **DG SET (IF APPLICABLE)**

Diesel Generator sets of stationary type comprising the following:

(1.) Diesel Engine Complete with all accessories

(2.) An alternator directly coupled to engine through flexible/rigid coupling complete with all accessories (CT's & VT's etc.)

(3.) Control Panel

(4.) Complete starting arrangement along with battery ,its charger

(5.) Base frame and foundation bolts etc.

(6.) Exhaust ducting meeting the statuary requirements, accessories, support structure and foundation bolts.

(7.) Day Oil Tank, fuel piping and accessories

(8.) Interconnection piping and accessories

(9.) Power and control cable gland and lugs at Bidder's equipment for all cables

(10.) Cable & Cabling between Bidder's equipment.

(11.) All lubricants for first filling, consumables and touch up paints etc for commissioning.

(12.) Acoustic enclosure meeting the statuary requirements. Necessary ventilation along with necessary starters & lighting shall be provided.

1.08.00 **CABLING**

1) Contractor shall provide cable trays and their accessories with support arrangements, trestle, trenches, duct bank etc. as required for the cables under his scope of supply for the complete system. However the Cable tray, supports and tray earthing for contractor cables on employer cable vault shall be supplied by employer.

2) Contractor scope shall include laying of cable from employer board as shown in Electrical Single Line Diagram Drg No. 4410-109-POE-J-001 on the employers nearest trestle in the FGD area as shown in Drg no 4410-999-POC-F-001 subject to availability of space and suitability. In case of non availability of space in employer's trestle, contractor shall make necessary arrangements for cable tray erection & cable laying. Further Contractor shall

supply cables, trestle, trenches, duct bank, cable slit, cable trays and structure etc. from employer trestle to the equipment in FGD area in the contractor's scope.

3) Contractor shall supply, lay and terminate the cables under his scope of supply

4) The contractor shall furnish the complete and consolidated feeder list for DC system, LT system and HT system for all loads and drives under the scope of supply of contractor to employer as per the format enclosed at Annexure-A. Contractor shall indicate the location of his equipment's in feeder load list.

5) Contractor shall provide cable glands and lugs for all equipment's in his scope.

6) Contractor shall provide all accessories such as rigid/ flexible conduits, fittings, junction boxes, tying materials, cable tags, and markers etc. for the cables under his scope.

7) Contractor shall provide Straight-through jointing kits for HT XLPE power cable, LT power and control cables, Cable termination kits for HT XLPE power cables, Welding receptacles, Trefoil cable clamps, Junction boxes.

8) Contractor shall provide Galvanised steel pipes/HDPE/hume pipes/PVC pipes, Miscellaneous items like M.S sections etc as required,

9) Contractor shall provide Fire proof cable penetration sealing system of Type-A and Type-B for cable galleries, cable exits etc

10) In addition to other drawings, Contractor shall also prepare complete equipment layout drawings, lighting layout drawings including cable tray layout, routing, Power and control cable schedules etc

11) Control interconnection charts shall also be prepared by bidder

1.09.00 **LIGHTING**

Complete lighting system for internal and external areas for the plant, buildings, chimney and equipment in the bidder's scope. Lighting fixtures complete with lamps & accessories, LED lighting fixture complete with driver circuit & accessories Lighting Panels, Chimney aviation light, Receptacles, Switch boxes. Conduits. Lighting Wires, Ceiling fans with regulators, Lighting poles. Lighting masts, Earth wires and rods, Junction boxes, Battery operated automatic self contained lighting fixture, Maintenance ladders as required are included in the bidder's scope.

Mandatory spare parts and maintenance equipment as required.

1.10.00 **EARTHING AND LIGHTNING PROTECTION**

Complete below ground earth mat and above ground equipment earthing system and lightning protection for the plant and equipment under contractors scope along with its interconnection to the nearest employers earth grid at two points.

1.11.00 **PAINTING FOR ELECTRICAL EQUIPMENT**

The painting of all electrical equipment shall be epoxy based with suitable additives. The thickness of finish coat shall be minimum 50 microns (minimum total DFT shall be 100 microns). However in case electrostatic process of painting is offered for any electrical equipment, minimum paint thickness of 50 microns shall be acceptable for finish coat. The Contractor shall furnish the complete painting details during detailed engineering stage.

1.12.00 **CONSTRUCTION POWER**

To meet the construction power requirement of the FGD and associated systems, the Employer shall provide Two Number 415V feeders in LT switchgears of North Karanpura STPP. The Contractor shall extend supply from these Construction power feeders to meet the construction power requirements at the various locations included in the Contractor's scope through suitably rated Isolation Transformers along with LT distribution boards as per requirement. LT Packaged Sub-stations with isolation transformers may also be used for this purpose. Suitable metering arrangement along with associated Instrument transformers and Metering Cubicles meeting the DISCOM requirements shall be provided by the Contractor at each Construction power feeder, for the measurement of actual energy consumed by the Contractor. The charges only for the actual energy consumed by the Contractor shall be recovered by the Employer based on prevalent rate of DISCOM.

Supply, erection, testing and commissioning of all equipments as required for further distribution for meeting the construction power requirements shall be in the Contractor's scope. All necessary statutory requirements for charging construction power of Contractor's network shall be in the Contractor's scope. Construction power supply network is a temporary arrangement which shall be used during the project construction phase. To meet this requirement, the equipments may be arranged by Contractor either by shifting their existing equipments at other installation or by fresh procurement, which may be taken back after commissioning of the project.

Even though the Employer shall make all efforts to maintain a continuous supply of construction power, the same is not guaranteed and Employer shall not be responsible for any loss or delays which the contractor may suffer on this account. Also the Employer shall not entertain any claim for exemption/reduction of liquidated damages for delay in execution of the contract due to irregular power supply. Contractor shall arrange/provide necessary backup arrangement on his own for uninterrupted power supply.

The Contractor shall maintain a minimum drawl power factor as per DISCOM regulations for their substations, and all such devices for maintaining power factor shall be under the scope of contractor. All temporary wiring must comply with local regulations and will be subject to Employer's inspection and approval before connection to supply. Power supply shall not be provided for use in labor and staff colony.

1.13.00 **TYPE TEST**

Contractor shall carry out all type tests on electrical equipment's as stipulated in relevant chapters of Part-B of technical specifications.

1.14.00 **MANDATORY SPARES**

Contractors scope shall include Mandatory Spares of all equipment as mentioned in the relevant portion of Technical Specification.

Annexure-A

STANDARD FORMAT FOR ELECTRICALFEEDER LOAD LIST

1	2	3	4	5	6	7	8	9	10	11	12
S. No.	KKS code as in vendor drawing	Description of feeder	Rating (KW/A)	Supply type	Unitised /Station	Normal / Emergency	Feeder type	Running Mode	Recommended cable size	Location Coordinates	Remarks
GUIDE LINES TO FILL THE FORMAT											
Column No.	Legend	Designation	Description								
1	S. No.	1,2,3	Serial Number								
2	KKS code as in vendor drawing	- - -	Unique kks of the Equipment								
3	Description	- - -	Description of the bidders Equipment								
4	Rating		Name plate Rating in kW or Amps at 50 deg C								
5	Supply type	11 KV 3 ph AC / 3.3 KV 3 Ph AC / 415 V 3 Ph AC / 220 V DC / 240 V AC UPS / 240 V AC Non -UPS									
6	Unitised/Station	U	Unit(U) is applied for each unit.								
		S	STN(S) is applied for common equipment load.								
7	Normal / Emergency	N	Normal Supply								
		E	Emergency Supply(Emergency supply i.e DG supply)								
8	Feeder type	U	Unidirectional Motor feeder								
		B	Bidirectional Motor feeder								
		H	Heater feeder								
		S	SFU(switch fuse feeder)								
9	Running Mode	W	Working								
		S	Standby								
10	Recommended cable size	- /- / - /- /-	Recommended Incoming power cable size in: No of runs/no. of cores/ Size in mm2/Al or Cu/ PVC or XLPE								
11	Location		Location of the Equipment in coordinates row & columns as per layout								
12	Remarks		Any other relevant information								
Notes:	1) Electrical Load list shall be submitted as "MS Excel" sheet also in addition to that in pdf as per the format given above.										
	2) Each Row shall contain data of Only One equipment / load. i.e., if there are two numbers of the same equipment, they shall be indicated in two different rows with unique description & tag number.										

SUB-SECTION-IIIC

CONTROL & INSTRUMENTATION SYSTEM

CONTROL AND INSTRUMENTATION SYSTEM

1.00.00 GENERAL

a) The Contractor shall provide Independent Control & Instrumentation system for control, monitoring and operation of associated drives and auxiliaries in FGD system including Limestone grinding & handling system, Gypsum Dewatering & handling system and other systems being provided under the contract, in all regimes of operation in safe and most efficient manner. The Contractor shall provide all systems, equipment, accessories and associated equipment, which are included in Contractor's scope, in a fully operational condition acceptable to the Employer.

b) The Contractor shall provide all material, equipment and services which may not be specifically stated in the specifications but are required for completeness of the equipment/systems furnished by the Contractor and for meeting the intent and requirements of these specifications. The work shall be consistent with modern FGD based power plant practices and shall be in compliance with all applicable codes, standards, guidelines and safety requirements in force on the date of award of the contract.

c) The Contractor shall also provide all the instruments along with cables, JB etc. for equipments / drives and services which may not be specifically stated in this specifications but are required for completeness of the FGD Control system shall be furnished by the Contractor and for meeting the intent and requirements of these specifications.

d) The Bidder scope shall include design, manufacture, engineering, inspection & testing at supplier's works, packing, forwarding to site, unloading, erection, testing & commissioning. The following clauses describe the brief scope of supplies. Scope shall be as described briefly in the following clauses but not limited to it. The detailed technical specifications are stipulated under Part - B, Section-VI of the specification as well as in various other Parts of the Technical Specifications.

2.00.00 MEASURING INSTRUMENTS

The following shall be provided as a minimum, meeting specification requirements of Sub-section - MEAS INST of Part-B, Section-VI of Technical Specification.

2.01.00 Primary instruments like Microprocessor based transmitters employing HART protocol, thermocouples & RTDs along with temperature transmitters, pressure/diff. pressure/temperature/flow (Ultrasonic/electromagnetic) transmitter & gauges, flow sensing elements (orifice plates, flow nozzles etc), Ultrasonic, Radar type level transmitters, density meter (Coriolis type. In case the bidder proposes other type of density meter as per the bidder standard and proven practice, the same shall also

be acceptable except Nucleonic type density meter), pH analyser, SO2 analyser, Flue Gas flow transmitter, vibration transmitter etc. for:

(a) FGD plant and other system being provided under the contract, as indicated in enclosed tender diagrams (Part E) of this specification.

(b) Integral to equipment which are not indicated in the tender drawings, but are required for control, monitoring and operation of the equipment / plant systems for which no P&IDs are enclosed, all the instruments shall be provided to meet the actual system requirements and meeting redundancy and other requirements specified under technical specifications subject to Employer's approval.

(c) For Binary and analog inputs required in major equipments of FGD system, protection triple-sensing devices shall be provided. Binary and analog inputs, which are, required for protection of more than one equipment as well as protection signals for HT Drives etc., triple sensing devices shall be provided. However, for vibration measurements and protection minimum 2 number (X and Y direction) sensors per bearing shall be provided.

(d) For other critical binary and analog inputs required for protection and interlock purpose of other equipment (e.g. those interlocks which may result in loss of production, non-availability of a major equipment etc.), triple sensors shall be provided.

(e) Temperature elements, electronic transmitters etc. are to be provided for all the cases. Use of process actuated switches is acceptable only in the cases as indicated in the tender drawings.

2.02.00 Single Input DIN rail mounting type temp transmitters (mounted in JBs) shall be provided by the Contractor for all temperature elements under Contractor's scope.

2.0□.00 CONTINUOUS EMISSION MONITORING SYSTEM (CEMS)

2.03.01 CEMS comprising of analysers and associated items for measurement of SOx, NOx, CO, CO2, Mercury, Particulate Emission (dust density/ stack opacity) monitor, Stack Flue Gas Ultrasonic Flow Meter shall be provided for each unit by the Contractor for stack emission monitoring.

A) LIST OF FLUE GAS EMISSION ANALYSERS

S. No.	KKS CODE	DESCRIPTION	RANGE	ZONE	REMARK
1	HNE10CQ005	SOx ANALYSER	0-300/0-1000PPM (SELECTABLE)	CHIMNEY	

2	HNE10CQ001	NOx ANALYSER AT CHIMNEY	0-300/0-1000PPM (SELECTABLE)	CHIMNEY	
3	HNE10CQ002	CO2 ANALYSER	0-40%	CHIMNEY	
4	HNE10CQ004	CO ANALYSER	0-1000 (SELECTABLE IN 0-100/0-200,0-500,0-999 PPM)	CHIMNEY	
5	HNE10CQ003	OPACITY ANALYSER AT CHIMNEY	0-999 mg/m3 (PROGRAMMABLE)	CHIMNEY	
6	HNE10CQ006	Mercury (Hg) Analyser	0-100 microgram/Nm3	CHIMNEY	
7	HNE10CQ007	Flowmeter (Ultrasonic Time of Transit Type	-	CHIMNEY	

Notes:- 1) SOx, NOx, CO2 and CO analyser are shown separately for the purpose of input only, otherwise SOX, NOX, CO2 and CO analyser may be supplied as a single unit/ Combined Unit (s) meeting specification requirement.

2) These are per unit quantities.

2.03.02 CEMS, instruments shall be provided with provision for bidirectional connectivity over Modbus/RS-232/RS-485 with Employer's central cloud server for real time data monitoring, remote diagnostics & remote calibration checks, etc., complying with CPCB IT Division document "Protocol for real time (Emission & Effluent) data management from industries version 1.2 (10.6.2015) or the latest regulatory requirement prevailing at the time of award of the contract. All necessary hardware and software required at instrument end shall be provided by the Contractor. Necessary details like scheme, register addresses of analyzer, etc. shall also be provided by the Contractor for implementation of above. The Contractor shall fully assist NTPC's agency involved in implementation of above connectivity.

For CEMS - In addition to above requirement, 4-20 mA connectivity to DDCMIS shall be provided by the Contractor

2.03.03 Comprehensive Annual Maintenance Contract (AMC) for three (03) years after warranty period shall be provided by the contractor for CEMS.

2.04.00 SERVICES DURING DEFECT LIABILITY PERIOD FOR CEMS

2.04.01 The Contractor shall provide an unlimited warranty on all equipments during the Defect liability period. This warranty shall include repair, replacement, replenishment of consumables (for e.g. reagents, calibration gases etc. as applicable) and

	correction of identified discrepancies including Analysers, Sample Handling System, Transmitters, (as applicable) etc. at no cost to Employer.
2.04.02	The Contractor shall provide warranty spares including components for each system based on (and keeping adequate over margin) normally experienced failure rate. Exhaustive list of all such items shall be submitted along with Datasheet for Employer's review and approval during details Engg stage regarding adequacy of the same. The warranty spares as per the list mentioned above will be dispatched by the Contractor along with the main equipment consignment. However for items which have a limited shelf life shall be dispatched in a phased manner during the warranty period. Unused spares/consumables shall be Contractor's property after expiry of warranty period and shall be taken back.
2.05.00	SERVICES DURING ANNUAL MAINTENANCE CONTRACT (AMC) PERIOD FOR CEMS
2.05.01	The Contractor shall provide complete maintenance services for each System under comprehensive Annual Maintenance Contract (AMC) for period of three years after the Warranty period.
2.05.02	The AMC shall cover total maintenance of all Analysers, Sample Handling System ,Transmitters etc. coming under the scope of each system and shall include free repair/replacement of each items, replenishment of consumables, correction of problems (if any) and supply of expendable items.
2.05.03	Further, Contractor may note that during the AMC he will be allowed to use Employer's mandatory spares, but has to replenish the same within three months' time or before completion of AMC period whichever is earlier.
2.05.04	The Contractor shall prepare detailed list of faults corrected and parts, expendables utilized during AMC period and shall furnish the same to Employer, properly documented at the end of AMC period. Further, during AMC period the details as required by Employer/ Project Manager shall be made available by Contractor's personnel.
2.05.05	Contractor shall also provide a list of all required AMC spares which shall be finalized along with datasheet during detail Engineering stage. These spares will be dispatched by the Contractor at the beginning of AMC on yearly requirement basis. However for items which have a limited shelf life shall be dispatched in a phased manner during the AMC period. Unused spare/consumable shall be Contractor's property after expiry of AMC period and shall be taken back.
2.06.00	DEPUTATION OF ENGINEER/ TECHNICAL EXPERT FOR CEMS
2.06.01	Contractor shall depute Technical Experts of the OAM /OEM/OES/ (Original Analyser Manufacturer/Original Equipment Manufacturer/Original Equipment supplier) for each of the above system at Site, who will be fully qualified to perform the required duties, supervision of maintenance, repair etc. for a period of six month.

Employer will intimate the contractor two weeks advance notice for start of deputation period.

2.06.02 After expiry of above six month period, Technical expert for each system shall visit site on monthly basis for monitoring the performance and rectify the problem (if any) for each system for the remaining warranty period and during entire AMC period. In the event of any malfunction/fault/failure in the system or any component thereof contractor shall depute Technical expert of respective system to reach site within 48hrs of call raised by site during the remaining warranty period and entire AMC period.

□.00.00 PROCESS CONNECTION □ PIPING

Process connection & piping including LIE / LIR, all impulse piping, pneumatic piping/tubing, valves, valve manifolds, fittings and all other accessories shall be provided on as required basis for proper installation & completeness of impulse piping system and air supply system, as stipulated under Sub-section PCP, Part-B, Section-VI of Technical Specification.

4.00.00 INSTRUMENTATION CABLES□C □ I SYSTEM□POWER SUPPLY DISTRIBUTION CABLES □ CABLE SUB-TRAYS

a) All instrumentation cables (twisted & shielded, FRLS PVC insulated and sheathed), data highway / fibre optical cables including prefabricated cables (with plug-in connectors), cables as applicable for direct interconnection of two equipment/ system/ devices in Contractor's scope as well as for connection of signals from/to systems like MCC/LT SWGR/HT SWGR etc. (even if they are not in Contractor's Scope.) shall be provided by Contractor on as required basis.

b) All power supply distribution cables required for directly connecting two equipment / systems devices in contractor's scope shall be provided by the contractor. All these cables shall be FRLS & as per IS-1554 Part – I latest edition.

c) Above cables shall be provided along with necessary laying & termination accessories, hardware etc. meeting requirements specified under Sub-section INST CABLE, Part -B, Section-VI of Technical Specification. All sub trays along with supporting, connecting hardware etc. required for laying of instrumentation, control, power and other cables etc. up to main cable trays are under Bidders scope.

d) Cables required for interfacing PLC control system with Employers DDCMIS (both SG and BOP) located in CER shall be in bidder's scope.

e) Cables for connectivity of CEMS signals to Employer's Unit DDCMIS located in unit CER shall be in bidder's scope.

f) Junction boxes with requisite terminals shall be provided on as required basis.

□.00.00 CONTROL □AL□ES □ ACTUATORS

5.01.00 Control valves, actuators and accessories, shall be provided on as required basis for meeting requirements specified under Sub-section CONTROL VALVE, Part-B, Section-VI of Technical Specification. Specially designed valves/trims to prevent cavitations and limit noise and control outlet velocity, shall be provided.

5.02.00 Microprocessor Based Electronic Positioner is to be provided on as required basis with all the Control valves and all control dampers being provided by the contractor.

□.00.00 CONTROL SYSTEM

6.01.00 Instrumentation and Control System with interlocks, protection and annunciation for FGD system and other system being provided under the contract shall be provided with Software and hardware as required to provide a complete functioning of the system. Dual processor based PLC system with PC based Operator Work Station (OWS), programmable station and A4 size color Laser printer etc. on as required basis (to be decided during detail Engineering) for controlling and monitoring of the FGD and associated system located in FGD control room. One OWS shall also be provided with capabilities of programming station of PLC and Human Machine Interface system (EWS cum OWS). The PLC configuration drawing shall be as per Tender drawing no. 0000-151-POI-A-013.

Depending on the cable distance between FGD control room and FGD system such as Gypsum handling system, Limestone handling system etc, requirement of Remote Input Output (RIO) shall be finalized during detail engineering, In such cases, contractor to provide RIO on as required basis. Contractor shall ensure that RIO cabinets are provided in air conditioning environment.

6.02.00 The Bidder shall provide software license for all software being used in Bidder's System. The software licenses shall be provided for the organization i.e. it should not be site-specific and shall also not be hardware/machine-specific. That is, if any hardware/machine is upgraded or changed, the same license shall hold good and it shall not be necessary for Owner to seek a new license/renew license due to up gradation/change of hardware/machine in Bidder's System at site. All licenses shall be valid for the continuous service life of the plant.

6.03.00 For each equipment/drives/pumps where Local Operation is envisaged in addition to control system as mentioned in respective Mechanical Sections, Bidder to consider Local Push button station comprising following:

a) Start Push Button
b) Stop Push Button
c) ON Running Lamp
d) OFF Lamp
e) MCC Disturbance Indicating Lamp

6.04.00	The contractor has top provide kks codes for instrument and drives in the P&ID and other related document
6.05.00	The minimum quantity per unit of furniture envisaged in FGD control room is as mentioned below: a) Chair - 4 nos. b) Printer table - 1 no c) Computer table - 2 no. d) Key pad - 1 no. e) Locker set - 1 no
6.06.00	Complete wiring / cabling from field devices to panels / MCC and vice versa including conduits / trays / fixtures etc. shall be in bidders scope.
6.07.00	Microprocessor based modular 24V DC power supply system shall be used for powering the control systems including its network devices. 24V DC power supply system for PLC based control system shall comprise of two sets, each set shall consist of 1 x 100% microprocessor controlled, intelligent, modular rectifier banks, Controller – one for each rectifier bank, 1 x 100% Nickel - Cadmium batteries for one (1) hour duty, 1 X 100% DC distribution board. 1x100% Microprocessor controlled Battery Health Monitoring System (BHMS)–common for both the sets. Contractor shall provide UPS of suitable capacity for the intended application meeting the requirements of Technical Specifications as per Cl. No. 9.05.00, Part B, III-C5. Contractor to note that UPS of configuration C is acceptable only upto 5 KVA. In case the consolidated load requirements exceeds 5 KVA, Contractor to provide UPS with Configuration B in place of Configuration C as per Technical Specifications as per Cl. No 9.05.00, Part B, III-C5. Bidder shall provide power supply distribution panels/cabinets/boxes for sub distribution of DC/Main UPS/Utility feeders on as required basis. The power supply distribution box shall include change over circuitry, switch fuse units, MCBs, terminal blocks etc. suitable for application. For detailed requirements of FGD system, refer Sub-Section III-C, Part B Section VI of technical specifications.

□.00.00 TYPE TEST REQUIREMENT

The type tests to be conducted for C&I systems & equipments shall be as detailed out in Sub-Section-C-06 Type Test Requirements, Part-B, Section-VI of Technical Specification.

□.00.00 TOOLS □ TACKLES

The Contractor shall furnish a complete new set of all special tools and tackles of reputed make and model which are required for erection, ease in maintenance to have minimum down time, testing and calibration of all the equipments and systems to be provided by the Contractor under this specification for C&I systems.

□.00.00 I□□□r□□□□□□ □ □□□ E□ □□□□□r□□ DDCMIS □□d S□□□□□□ LAN

9.01.00 Hardwired Signal exchange: Hardwired signal exchange between BOP DDCMIS (under Employer's scope) and FGD PLC (under Contractor's scope) like bypass damper status, inlet and outlet gates status, ID Fans status, ESPs status, Boiler Load Index (BLI), MFT etc. shall be provided on as required basis, for implementation of protections and interlocks. Contractor shall provide Remote Input Output (RIO) for PLC per unit, placed in Central Equipment Room (CER) for the same. However, contractor to consider IOs and cables for minimum number of hardwired signal exchange per unit as follows DI – 80, DO – 80, AI – 20 and AO – 20. NTPC shall provide 2 (Two) nos. of 24V DC power supply feeders in CER for powering RIO panel.

9.02.00 Control, operation and monitoring of FGD and associated system is primarily envisaged from Contractor's OWS placed in FGD control room. In addition to above, it is also envisaged to control, operate and monitor FGD and associated system remotely from main plant Central Control Room (CCR). To achieve the above the Contractor shall provide the following:

1) The FGD plant operation from CCR shall be made available through Ethernet link following TCP/IP standard. The system shall be OPC compliant.

2) Contractor shall provide necessary hardware and software for dual fibre optic connectivity & interconnection with station wide LAN for transfer of signals. All required plant data shall be transferred to / from through links ensuring complete security. The exact number of points to be transferred through the above communication link and the format of the data shall be finalized during detailed engineering.

3) The Contractor shall provide all assistance to the BOP C&I (in Employer's scope) supplier including co-ordination and flow of required information etc.

4) Contractor shall provide complete logics for FGD and associated system such as booster fan blade pitch control, FGD bypass damper control, FGD inlet and outlet gate control etc. FGD OEM shall furnish recommendations, if any, for implementation in employer's DDCMIS for boiler control.

9.03.00 Contractor to refer the General Layout Plan (GLP) to estimate the distance between FGD control room and Employer's CCR/CER.

10.00.00 Gr□□□d□□□ S□□□□□

Suitable electronic grounding is to be provided by the contractor for all C&I equipments/panels/desk in the scope of the contractor. The exact scheme shall be as finalized during detailed engineering. Also Refer tender drawing 0000-999-POI-019A and Sub-Section titled "Basic Design Criteria" in Part-B, of this Technical Specification.

SUB-SECTION-IIID

CIVIL WORKS

1.00.00 **SCOPE OF CI□IL WORKS**

Scope of Bidder shall include all Civil, Structural, Architectural works including underground facilities like drainage, sewerage, trenches, earthing mat/ grounding associated with complete Flue gas desulfurization (FGD) package covering but not be limited to the following:

a) Truck hopper (if applicable)

b) Limestone storage hopper with shed

c) Transfer points, Conveyor Galleries & Tunnels

d) Crusher House

e) Ball Mill Foundation

f) Ball Mill building

g) FGD Control Room building, MCC Buildings

h) Gypsum dewatering building

i) Gypsum storage shed

j) Pent house

k) Chimney including elevator, electrical works, aviation obstruction lighting

l) Absorber Tower foundations

m) Tank Foundations

n) Pump & Fan Foundations

o) Transformer foundations including Fencing, Paving etc.

p) Pipe and cable Trestles

q) Site levelling in Lime & Gypsum Handling area, as shown in tender drawing.

r) Roads Lime & Gypsum Handling area, as shown in tender drawing.

s) Fencing in Lime & Gypsum Handling area, as shown in tender drawing

t) Storm water drainage network for all areas in bidder's scope and its connection with the nearest owner's drain.

u) Sewerage network for all buildings and facilities and connection with the nearest owner's sewerage system.

v) Paving in entire FGD absorber area and parking block of Lime & Gypsum Handling area.

w) Any other miscellaneous building or facility required for FGD system.

The work to be performed under this specification consists of providing all labour, materials, construction equipment, tools and plant, scaffolding, supplies, transportation, all incidental items not shown or specified, but reasonably implied or necessary for successful completion of the work including Bidder's supervision and in strict accordance with the drawings and specifications. The nature of work shall generally involve earthwork in excavation & deep underground excavation, extensive de-watering, shoring and strutting, sheet piling, back filling around completed structures and plinth protection, paving , disposal of surplus excavated materials, piling, concreting including reinforcement and form work, brick work, fabrication and erection of structural / miscellaneous steel works, inserts, architectural items & finishes such as plastering, painting, flooring, doors, windows & ventilators, glass and glazing, rolling shutters etc., permanently colour coated profiled steel sheeting, anchor bolts, R. C. C. trenches with covers, laying and testing of water pipes, sanitation, water supply, drainage, damp proofing, water proofing and other ancillary items.

The work shall have to be carried out both below and above ground level and shall be involving, basements, equipment foundations, grounding, slabs, beams, columns, footings, rafts, walls, steel frames, brick walls, stairs, trenches, pits, access roads, culverts, trestles, finishes, false ceiling and complete architectural works, etc.

Analysis, design and preparation of construction drawings for all structure/facilities under the scope of this package and getting the same approved from the owner.

Uniform Finished ground level (FGL) in FGD absorber area shall be made available by the owner at a level specified in "Layout plan of FGD system". Refer Tender drawing no. 4410-999-POC-F-001.

Terminal points for site levelling, roads, drainage network & fencing shall be as indicated in "Layout plan of FGD system". Refer Tender drawing no. 4410-999-POC-F-001.

2.00.00 CONSTRUCTION FACILITIES

The following are also in the Bidder's scope of work:

1. Providing drinking and service water for Bidder's labour, staff and other personnel working for Bidder at the work site and in his staff/ labour colony. He shall install necessary bore wells with associated pumping or water tankers and treatment facilities to supply quality water as per standards.

2. Developing temporary staff colony and labour colony along with fencing etc. Land if required shall be arranged by the Bidder himself.

However space required for bidder's office, storage, pre assembly and fabrication areas shall be provided by owner free of charge within the plant premises.

The area to be allocated to the Bidder shall be discussed & finalized with the bidder after the award, keeping in view the availability of free space & similar requirement of other agencies.

3. Providing all arrangements for distribution of construction power at various locations as per his requirements from the supply point of Owner.

4. Providing all arrangements for the supply of construction water including bore-wells, water tankers etc.

5. Providing temporary construction office, construction stores (open / covered), workshops, material / field testing laboratory, any other temporary buildings

6. Providing all construction equipment, labour and materials. The Bidder shall provide all the tools and tackles required for the work.

7. Development of the pre-assembly and storage yard with fencing, drainage, internal roads, boulder soling, etc.

8. Approach road to project site is available. Further, Owner intends to construct the roads as per the layout shown in the General Layout plan in a progressive manner. Some of these roads may not be available to the bidder for his use. Similarly the drainage network for the plant site being constructed by the owner may not be available to full extent. The bidder shall plan his work within the plant area considering the above constraints of roads and drains. Access roads to his work sites, offices, stores, preassembly / fabrication yard, etc. as required for providing approach/access for men, materials, equipment, cranes, trailor, construction/erection activities etc., what so ever are required by the bidder, shall be constructed and maintained by the bidder. Bidder shall provide permanent access to all facilities/ structures from the nearby existing roads of the owner. Roads shall be in concrete (M-35 grade) as per IRC standards, with minimum thickness of pavement (PQC) as 250mm. Width of all such roads shall be 7.5M concrete pavement.

9. Area lighting at the construction / erection site, pre-assembly and storage yard, office areas and labour / staff colony.

10. Providing all necessary fire-fighting devices / equipment / fire tender etc. required during the project execution stage. He shall maintain all such equipment / devices in proper working conditions throughout the period of work.

11. Providing first aid facilities at the construction / erection sites, workshops, laboratories, pre-assembly and storage yard and other places of work as per the requirement.

12. The Bidder shall arrange skilled / semiskilled / unskilled manpower from local source(s) as far as available in this country. He shall also arrange supervisory staff for quality execution of all works in his scope.

13. **B□dd□r□ □□□□□□□ □□□r□□ □ □r□□□□□□ □□□□r□□□r□ □r □□□ □□□□r □□□ □□r□r□ □□□d□□□□:**

The Bidder shall adopt pre-engineered/ pre-fabricated constructions made of steel with single / double skin, insulated for un-insulated roof and wall coverings (fabricated out of permanently color coated metal sheets) for his site office, covered store workshop, laboratory or any other temporary buildings. Alternatively, bidder can adopt readymade `Portacabin' or similar construction. Bidder shall ensure that all such constructions are well-engineered, neatly constructed and overall present a pleasing look. The above requirements shall be applicable to his sub-vendors also and bidder shall be responsible for enforcing the same on his sub-vendors.

Any other type of construction if proposed by the bidder shall be subject to approval of the owner. However, such construction shall be based on proper design and shall have aesthetic look.

14. **U□□ □□□□□ □□d □□□ □□□□d □r□d□□□□:**

In line with Gazette Notification on Ash Utilization issued by MOEF and its amendment thereafter, Bidder shall use ash and ash based products in construction of his offices, stores, staff quarters and labour huts etc. He shall furnish a compliance report along with all details of use of ash and ash based products along with each bill. The above requirements shall be applicable to his sub-vendors also and Bidder shall be responsible for enforcing the same on his sub-vendors.

15. **R□□□r □ M□□□□□□□□□ F□□□□□□□□ □□ □□□ B□dd□r:**

Bidder shall establish/set up at site suitable repair facilities for construction plant, equipment and machinery (like cranes, hydra, forklifts, welding equipments, etc.) He will also make arrangements/tie up with manufacturers/ suppliers of such construction plant, equipment & machinery, for periodic overhaul/maintenance and for major breakdown, if any. He shall also keep adequate stock of spares at site for various construction plant, equipment and machinery to meet day to day requirements as recommended by the equipment manufacturer/suppliers or as instructed by the Engineer. Bidder shall deploy dedicated qualified, full time mechanical/electrical foreman/supervisors for manning the repair facilities as specified above.

SUB-SECTION-IV

TERMINAL POINTS & EXCLUSIONS

1.00.00 TERMINAL POINTS

1.01.00 **FGD**

The terminal points identified herein below shall be read in conjunction with the tender drawings, scope of supply and technical specifications of various systems covered under the package.

1.02.00 **Flue Gas Duct**

(i)	Un cleaned Flue Gas	For each unit: Outlet flange (matching flanges/ expansion joint included in the Contractor's scope) in the tapping from the common Flue Gas Duct going towards the existing Chimney. No load of duct shall be transmitted on the Employers facilities. In case no opening or flange connection is available in the ducts from where tapping will be taken, the cutting in the duct as well as flange connection shall be in the scope of the contractor.

1.03.00 **Equipment Cooling Water**

1.03.01 **Normal make up to ECW tank**

Contractor shall take a tap off suitably from the existing DM normal make up header (DM normal make up pump discharge) available along C-row at CD bay rack for meeting the makeup water requirement of ECW system. The pressure available at TP will be 4Ksc (gauge) wrt FGL (approx.).

1.03.02 **Emergency make up to ECW tank**

Contractor shall take a tap off suitably from the existing DM Emergency make up header (condensate transfer pump discharge) available along C-row at CD bay rack for meeting the emergency make up water requirement of ECW system. The pressure available at TP will be 4 Ksc (gauge) wrt FGL (approx.).

1.04.00 **Process Water**

Employer shall provide Raw water tap off from 700NB header in raw water pump area near raw water reservoir for further connection by bidder.

1.05.00 **Gypsum Wash Water (Clarified Water)**

For Gypsum washing, Contractor shall take a tap off suitably from the existing HVAC header (HVAC make up pump discharge) available along C-row at CD bay rack for meeting the water requirement of Gypsum washing. The pressure available at TP will be 4Ksc (gauge) wrt FGL (approx.).

1.06.00 **Potable water**

Contractor shall take a tap off suitably from the existing potable water supply header (potable water pump discharge) available along C-row at CD bay rack for meeting the potable water requirement . The pressure available at TP will be 3Ksc (gauge) wrt FGL (approx.).

1.07.00 **Waste Water**

FGD waste water pipes shall be terminated at 5M away from the nearest Mixing tank of Employer in HCSD Silo area. Pressure at terminal point shall be 3kg/cm^2(g) at 300mm above FFL. pH shall be 7.0 (approx.) and temperature shall be <50°C.

1.08.00 **Limestone**

Truck hopper for receipt of limestone trucks

1.09.00 FIRE DETECTION AND PROTECTION SYSTEM

(i) Mechanical:

Hydrant and spray header each of size 150 NB available in near Chimney for tapping required for Hydrant and spray system for FGD facilities. Minimum pressure available for hydrant and spray system shall be 8 Kgf/cm^2.

1.10.00 All interconnections of matching flanges/expansion joints/piping/ducting etc, between employer supplied equipment/equipment supplied by other contractors and contractor supplied items at terminal points specified above shall, however, be in the scope of FGD Contractor.

1.11.00 **Electrical**

1.11.01 Terminal points of Contractor's electrical scope, applicable for all systems/ subsystems described in relevant clauses for SCOPE is given below:

(i) Terminals of Employers HT switchgear.

1.12.00 Control & Instrumentation

a) Employer's marshalling cabinets for hardwired signal exchange with Employer system.

b) Instrument air at one point (if required).

c) One (1) no. 240V, single phase, 50 Hz feeder per unit for meeting the unregulated AC power supply requirement for illumination, heating, ventilation, and utility outlets, etc. at bidder's Power supply distribution panel.

d) Employer's station wide LAN switch

2.00.00 EXCLUSIONS

2.01.00 Common Fire fighting system and Equipment (unless specifically included in scope).

2.02.00 SG and BOP (C&I) DDCMIS

2.03.00 Station wide LAN

SUB-SECTION-V

SALIENT DESIGN DATA

CLAUSE NO.	SALIENT DESIGN DATA	
1.00.00	**STEAM GENERATOR DATA**	
	1. Location	Outdoor
	2. Operation	Base load
	3. Type	Pulverised coal fired, Balanced Draft, Dry bottom
	4. Boiler Maximum Continuous Rating (BMCR)	2220 Tonns/hr.
	5. Steam pressure at SH outlet	270 Kg/cm²(a)
	6. Steam temperature at SH outlet	596°C
	7. Steam temperature at RH outlet	596°C
	8. Oil for start up and flame stabilisation	HFO/HPS/LDO
	9. Fuel oil system sizing	30% of Boiler MCR
	10. Pulverised coal size	Minimum 70% through 200 Mesh and 99% thru 50 mesh
	11. Type of pulveriser	Vertical spindle mills
	12. Type of oil burners	Steam / Air atomised
	13. No. of air heaters	Two (2) no. Tri-Sector
	14. No. of ID Fans	Two (both working)
2.00.00	**ESP DATA**	
	1. Location	Downstream side of Airpreheaters
	2. Operation	Base load
	3. Type	Rigid discharge frame
	4. Rapping	Intermittent
3.00.00	The Flue Gas Desulphurisation (FGD) System shall be designed to comply with the requirements stipulated under 'Guarantee point and Design point' in the table below:	

Sl. No	Item	Guarantee Point	Design Point
1	Boiler Load in MW (e)	660	VWO
2	Type of Coal	Worst coal	Worst coal
3	Ambient air condition	27° C temp. and 60% RH	45° C temp. and 60% RH
4	Coal Flow (T/hr)	547	577
5	Gas flow at the FGD inlet when firing respective coal (Nm^3/sec)*	769 (1135 m^3/s)	852 (1305 m^3/s)
6	Gas temperature at FGD inlet (deg.C)	130 degree Celsius	145 degree Celsius
7	Flue Gas Composition at FGD system inlet:		
	(i) O_2 (% v/v wet)	6.18	5.8
	(ii) CO_2 (% v/v wet)	9.1	8.92
	(iii) H_2O (% v/v wet)	14.63	17.29
	(iv) SO_2 (% v/v wet)	0.088	0.087
	(v) N_2 (% v/v wet)	70.1	68.00
	(vi) Inlet SO_2 (mg/Nm^3-wet)	2437	2407
	(vii) NO_x	< 100 MG/Nm^3 at 6% O_2	
	(viii) Dust (mg/Nm^3)	50-200	50-200
	(iv) SO_3 (ppm) (at 6% O2 wet)	12.94	12.45

Sl. No	Item	Guarantee Point	Design Point
8	SO_2 removal Efficiency (%)	96.997	96.997

* The flue gas volume in Nm^3/sec shall be calculated at 101.325 kPa and 273.15 K.

The Flue Gas Desulphurisation (FGD) System shall also be designed to achieve SO_2 emission of less than 100 mg/Nm_3 (6% O_2 dry) for the range of loads at different operating conditions and for range of coals as specified in this Sub-Section below.

3.01.00 **Wet stack sizing criteria**

Wet stack shall be sized for the following conditions

SN	Item	Design Condition
1.	Boiler load in MW (e)	VWO
2.	Gas flow at FGD inlet (m3/sec)	Design point (as given in cl. No. 3.00.00)
3.	Gas temperature at chimney inlet (deg. C)	To be worked out by bidder considering design point condition.
4	Flue gas velocity (m/sec) (Maximum)	18

4.00.00 Predicted Performance data at FGD Inlet at various Loads

Table-1

Sno	Description	Units	Load				
1	Boiler Load		**VWO**	**100 % BMCR**	**100 % TMCR**	**80% TMCR**	**50 % TMCR**
2	Type of Coal		**Design Coal**	**Design Coal**	**Design Coal**	**Design Coal**	**Design Coal**
3	Coal Fired	t/hr	474	490	451	360	241
4	Flue Gas Flow at APH Outlet	t/hr	3058	3166	2914	2409	1839
5	Flue gas temperature at APH Outlet	deg C	131	131	130	125	111
7	Particle Distribution in Flue Gas at ESP Outlet (Based On Site Data)						
	Larger than 100 microns	%	25 to 40				
	90 - 100 microns	%	4 to 10				
	70 - 90 microns	%	5 to10				
	50 - 70 microns	%	5 to 15				
	30 - 50 microns	%	5 to 15				
	10 - 30 microns	%	10 to 25				
	Less than 10 microns	%	5 to 25				

Table-2

Sl no	Description	Units	Load	
1	Boiler Load		**100 % TMCR**	**80 % TMCR**
2	Type of Coal		**Worst Coal**	**Best Coal**
3	Coal Fired	t/hr	547	296
4	Flue Gas Flow at ESP Outlet	t/hr	3008	2349
5	Flue gas temperature at ESP Outlet	deg C	135	124
7	Particle Distribution in Flue Gas at ESP Outlet (Based On Site Data)			
	Larger than 100 microns	%	25 to 40	
	90 - 100 microns	%	4 to 10	
	70 - 90 microns	%	5 to10	
	50 - 70	%	5 to 15	

Sl no	Description	Units	Load
	microns		
	30 - 50 microns	%	5 to 15
	10 - 30 microns	%	10 to 25
	Less than 10 microns	%	5 to 25

TMCR- Turbine Maximum Continuous Rating
BMCR-Boiler Maximum Continuous Rating
VWO - Valve wide open

5.00.00 COAL CHARACTERISTICS

Refer sub section I B, Part-A, Section VI Project Information of Technical specification for Domestic & Imported Coal & Ash characteristics.

5.00.00 FUEL OIL CHARACTERISTICS

Refer sub section I B, Part-A, Section VI Project Information of Technical specification for Fuel oil characteristics.

6.00.00 LIMESTONE CHARACATERSTICS

Table-3

Chemical Analysis(% by mass)			
1.	CaO	%	47-51.0*
2.	MgO	%	0.9-2.0
3.	Fe_2O_3	%	0.45-1.0
4.	Al_2O_3	%	1.19-2.1
5.	Si_2O_3	%	2.1-4.5
6.	Mn_2O_3	%	<0.12
7.	P_2O_5,	%	Traces
8.	Cl_2	%	<0.015

9.	Na_2O	%	<0.16
10.	K_2O	%	<0.01
11.	TiO_2	%	<0.02
12.	Total Sulphur	%	<0.1
13.	LOI	%	39.0-41.3
Physical properties			
1	Bond Index	kWh/t	13
2	Granule size		Medium

Note:

1. *Guaranteed parameters (guarantee on limestone consumption, auxiliary power consumption & gypsum purity) shall be based on available (reactive) CaCO3 content of 89%. The design of Flue Gas Desulphurisation (FGD) system & auxiliaries shall be based on available (reactive) CaCO3 content of 79%.

2. For the purpose of volumetric computations of limestone handling & storage system the bulk density of limestone shall be taken as 1400 kg/m3. However for torque, drive & structural load requirements the density of lime stone shall be taken as 1700 kg/m3. For gypsum, the bulk density shall be taken as 900 kg/m^3 for volumetric computation and 1250 kg/m3 for torque, drive & structural load requirements.

7.00.00 **AIR CONDITIONING AND VENTILATION SYSTEM**

GENERAL REQUIREMENTS

1. All equipments shall be located indoor unless otherwise agreed to by the Employer. The equipment and layout shall generally be in accordance with the General Layout Plant drawings.
2. The layout of all equipment and accessories shall be developed in a way to facilitate easy accessibility and maintenance of all equipments.
3. Each equipment shall be provided with suitable lifting arrangement, e.g. Lifting lugs, eye bolts, etc to facilitate maintenance.

7.01.00 **DESIGN PHILOSOPHY FOR AIR CONDITIONING**

1. Design ambient conditions for all air conditioning system shall be as indicated below:

Season	Dry Bulb Temp. (Deg. C)	Wet Bulb Temp. (Deg. C)
Summer	**45.0**	**27.0**
Monsoon	**35.8**	**28.3**
Winter	**35.0**	**25.0**

2. All equipments of Air Conditioning system shall be designed for continuous duty.
3. All air conditioned areas shall be maintained at 24 deg. C ± (plus or minus) 1 deg. C and relative humidity of 50% ± (plus or minus) 5%.
4. The fresh air quantity for air-conditioned areas of FGD Control Room etc. shall be 0.45 M^3/minutes/person or 1.0 air change per hour whichever is greater. Fresh air fan capacity shall be minimum 10% of the total CMH value of working indoor units.
5. Lighting load shall be minimum 2 Watts/Sq. feet.
6. The occupancy for general area shall be minimum one person per 10 Sq. M and for conference room the same shall be one per 3 Sq.M. In the equipment rooms etc, the occupancy may be one person per 25 Sq.M (Minimum).
7. In Air conditioning system for FGD Control Room, return air shall be routed back to AHU room through plenum space.
8. The supply and return air ducts shall be provided with automatic (motorised) fire dampers (of 90 minutes fire rating) at locations where ducts pass through walls & floors. Operation of these dampers shall be interlocked with the fire alarm system and shall also be possible to operate manually from the remote control panel. Required electrical contacts in control panel of A/C plant and further wiring upto fire alarm panels shall be done by Bidder.
9. Soft water make up (if required) for complete air conditioning and ventilation system shall be provided by the bidder in-line with terminal point specified in technical specification.
10. Coil face area of Air Handling units shall be designed considering a face velocity of not more than 2.5 m/sec.
11. Air distribution system shall be sized to have a constant frictional drop along its length and velocity through ducts shall not exceed 7.6 m/sec.

12. Requirement of Underdeck Insulation (for A/C area)

    Underdeck insulation of 50 mm nominal thickness of glass wool (32 Kg/cu.m) or rock wool (48 Kg/cu.m) shall be provided if

    i) Non A/C area is located just above the A/C area. In this case, underdeck insulation shall be provided underneath of the ceiling of A/C area.

    ii) Non A/C area is located just below the A/C area. In this case, underdeck insulation shall be provided underneath of the ceiling of Non A/C area.

    iii) Underneath the ceiling of AHU room located below the A/C area or exposed to Atmosphere.

13. AHU's shall be provided with two stage of filteration i.e. pre and fine filter. All fresh air supply shall also be filtered using pre and fine filter.

14. A minimum design margin of ten (10) % shall be considered in design of A/C Plant Capacity for each area.

15. For areas, where A/C load is of the order of 25-60 TR, Direct Expansion (D-X) type Condensing unit shall be provided depending on the availability of space/ layout etc. For areas, where A/C load is of the order of 15-25TR, ductable split/packaged A/C shall be provided. Smaller areas which are away from the D-X type Condensing unit /central chilling units which may require air conditioning upto 15 TR rating shall be served with Hi-wall Split/Cassette air conditioner units as per requirement. For static excitation control room (if applicable), precision air conditioners of required capacity shall be provided.

16. Insulation for supply and return air ducts: Supply and return ducts shall be insulated. All types of Insulation used for HVAC application shall be CFC/HCFC free.

7.02.00 REDUNDANCY OF EQUIPMENTS

7.02.01 Redundancy of various A/C system equipments shall be as follows:

a) FGD Control Room Building

i) Air Cooled condensing units Air conditioners: 2X100%
ii) AHU (with VVVFD): 2 X 100%

b) 100% standby shall be provided for area served by Cassette / Hi-wall Split type air conditioners for all other control rooms covered in the scope of this package.

c) Fresh air fans shall be 1 x 100 % Capacity for each AHU room.

7.02.02 DESIGN PHILOSOPHY – Ventilation System

1. Air changes per hour in evaporative/ mechanically ventilated areas shall be as follows:

i)	For all evaporative cooled areas	-	6 – 8
ii)	General areas	-	20

iii) MCC / Switchgear rooms and Battery rooms& other areas where gaseous fumes/ vapours are generated - 30

2. However in areas producing lot of heat, temperature shall be the criteria as follows:-

a) Inside temperature shall be minimum 3 deg.C below the design ambient temperature during summer for evaporative cooled areas.

b) Inside Temperature shall be maximum 3 deg.C above the design ambient temperature during summer for mechanically ventilated areas.

Note : Dry bulb temperature during summer = 45 Deg C.

The criteria which gives higher number of air changes/higher quantity of air of either of condition (Cl. 1 or 2) flow shall be selected.

3. All ventilation systems shall operate on 100% fresh air. All mechanically ventilated areas shall be positively ventilated by means of supply air fans fitted with filters and/or gravity operated back draft dampers and exhaust fans for ventilation of heat generating areas combination of supply air fans with exhaust air fans shall be provided. MCC / switchgear and cable gallery areas shall be provided with gravity operated back draft dampers in association with supply air fans in order to maintain positive pressure. Battery rooms and other fumes/odour generating areas shall be negatively ventilated by means of exhaust air fans / roof exhausters and intake louvers. All other areas like pump house, Blower/compressor house (if any), etc shall be positively ventilated by a combination of supply air fan and exhaust air fan. Supply air fan catering for electrical areas (MCC & Switchgear rooms) shall be provided with pre-filters and fine filters and for other areas shall be provided with pre-filter only.

4. All the equipments of Ventilation system shall be designed for continuous duty.

5. The supply air ducts of evaporative type ventilation system entering into switchgear room, cable galleries etc. shall be provided with automatic (motorised) fire dampers (of 90 minutes fire rating). Operation of these dampers shall be interlocked with the fire alarm system and shall also be possible to operate manually from the remote control panel. Required electrical contacts in control panel of A/C plant and further wiring upto fire alarm panels shall be done by Bidder.

6. Circulating water Capacity for Air washer units shall be minimum 0.7 Cu.M/hr per 1000 Cu.M /hr of air flow. Velocity through piping shall be limited to 2.0 m/sec and for gravity flow the same shall be limited to 1.5 m/sec. Air distribution system shall be sized to have a constant frictional drop along its length and air velocity through ducts shall not exceed 12.5 m/sec.

7. For pumps, continuous motor rating (at 50°C ambient) shall be atleast 10% above the maximum load demand of the pump in the entire operating range. For fans, compressors and blowers continuous motor rating (at 50°C ambient) shall be atleast 10% above the maximum load demand at the design duty point.
8. Supply air fans, exhaust air fans & ventilations of each area shall be provided with local starter panels.

SUB-SECTION-VI

FUNCTIONAL GUARANTEES

&

LIQUIDAED DAMAGES

FUNCTIONAL GUARANTEES, LIQUIDATED DAMAGES FOR SHORTFALL IN PERFORMANCE AND PERFORMANCE GUARANTEE TESTS

1.00.00 GENERAL

The term "Performance Guarantees" wherever appears in the Technical Specifications shall have the same meaning and shall be synonymous to "Functional Guarantees". Similarly the term "Performance Tests" wherever appears in the Technical Specifications shall have the same meaning and shall be synonymous to "Guarantee Test(s)".

2.00.00 PERFORMANCE GUARANTEES / PERFORMANCE TESTS

2.01.00 **General Requirements**

2.01.01 The Contractor shall guarantee that the equipment offered shall meet the ratings and performance requirements stipulated for various equipment covered in these specifications.

2.01.02 The guaranteed performance parameters furnished by the Bidder in his offer, shall be without any tolerance values whatsoever. All margins required for instrument inaccuracies and other uncertainties shall be deemed to have been included in the guaranteed figures. No tolerance or allowance on the test result will be permitted for instrument errors or inaccuracy, the method of testing or any other causes.

2.01.03 The Contractor shall conduct performance test and demonstrate all the guarantees covered herein. The various tests which are to be carried out during performance guarantee tests are listed in this Sub-section. The guarantee tests shall be conducted by the Contractor at site in presence of Employer on each unit individually.

2.01.04 All costs associated with the tests including cost associated with the supply, calibration, installation and removal of the test instrumentation shall be included in the contract price.

2.01.05 The performance tests shall be performed using only the normal number of Employer supplied operating staff. Contractor, vendor or other subcontractor personnel shall be used only for instructional purposes or data collection. At all times during the Performance Tests the emissions and effluents from the Plant shall not exceed the Guaranteed Emission and Effluent Limits.

2.01.06 It shall be responsibility of the Contractor to make the plant ready for the performance guarantee tests.

2.02.00 **Test Instrumentation, Flow Measurement and their Calibration**

2.02.01 All instruments required for performance testing shall be of the type and accuracy required by the code and prior to the test, the Contractor shall get these instruments calibrated in an independent test Institute approved by the Employer and submit the same to Employer prior to commencement of test. All test instrumentation required for performance tests shall be supplied by the Contractor and shall be retained by him upon satisfactory completion of all such tests at site. All calibration procedures and standards shall be subject to the approval of the Employer prior to commencement of test. The protecting tubes, pressure connections and other test connections required for conducting guarantee test shall conform to the relevant codes.

Tools and tackles, thermowells (both screwed and welded) instruments/devices including flow devices, matching flanges, impulse piping & valves etc. and any special equipment, required for the successful completion of the tests, shall be provided by the Contractor free of cost.

The Performance test shall be carried out as per the agreed procedure. The detailed PG test procedure shall be submitted within 90 days of the date of Notification of Award and finalization of the PG test procedure shall be done within 180 days from the date of Notification of Award.

2.02.02 The P&G test procedures shall be submitted for equipments/system & subsystem under Contractor's scope for all Guarantees as mentioned below, as per latest International codes / standard including correction curves, meeting the specification requirements along with sample calculations & detailed activity plan of preparation (including test instrumentation), conductance and evaluation of Guarantees.

2.02.03 The Contractor shall submit for Employer’s approval the detailed Performance Test procedure containing the following:

(a) Object of the test.

(b) Various guaranteed parameters & tests as per contract.

(c) Method of conductance of test and test code.

(d) Duration of test, frequency of readings & number of test runs.

(e) Method of calculation.

(f) Correction calculations & curves.

(g) Instrument list consisting of range, accuracy, least count, and location of instruments.

(h) Scheme showing measurement points.

(i) Sample calculation.

(j) Acceptance criteria.

(k) Any other information required for conducting the test.

2.03.00 **Test Reports**

After the conductance of Performance test, the Contractor shall submit the test evaluation report of Performance test results to Employer promptly but not later than one month from the date of conductance of Performance test. Preliminary test reports shall be submitted to the Employer after completing each test run. Four (4) hard copies and two (2) soft copies on CD-ROM of each test report of final conducted test on each equipment/plant/system shall be submitted to Employer for approval.

2.03.01 Performance Guarantee Tests on the equipments/systems not covered in this Sub-section shall be carried out as per the procedure/test codes specified in respective detailed specifications.

2.04.00 **Acceptance of Guarantee Test Results**

(i) For Category-I Guarantees

In case during performance guarantee test(s) it is found that the equipment/system has failed to meet the guarantees, the Contractor shall carry out all necessary modifications and/or replacements to make the equipment/system comply with the guaranteed requirements at no extra cost to the Employer and re-conduct the performance guarantee test(s) with Employer's consent. In case the specified performance guarantee(s) are still not met but are achieved within the Acceptable Shortfall Limit as specified at **clause 3.00.00** of this sub-section, Employer will accept the equipment/system/plant after levying liquidated damages as per **clause 3.00.00** of this sub-section. However, if, the demonstrated performance guarantee(s) continue to be beyond the stipulated Acceptable Shortfall Limit, even after the above modifications/replacements within ninety (90) days or a reasonable period allowed by the Employer, after the tests have been completed, the Employer will have the right to either of the following:

Reject the equipment / system / plant and recover from the Contractor the payments already made

OR

Accept the equipment /system/ plant after levying Liquidated Damages. The liquidated damages for shortfall in performance indicated in clause 3.00.00 of this sub-section shall be levied separately for each unit. The rates indicated in clause 3.00.00 of this sub-section are on per unit basis. The liquidated damages shall be pro-rated for the fractional parts of the deficiencies.

(ii) For Category-II Guarantees

In case during performance guarantee test(s) it is found that the equipment/ system has failed to meet the guarantees, the Contractor shall carry out all necessary modifications and/or replacements to make the equipment/system comply with the guaranteed requirements at no extra cost to the Employer and re-conduct the performance guarantee test(s) with Employer's consent. In case the specified performance guarantee(s) are still not met even after the above modifications/replacements with in ninety (90) days or a reasonable period allowed by the Employer, after the tests have been completed, the Employer will have the right to either of the following:

Reject the equipment /system / plant and recover from the Contractor the payments already made.

OR

Accept the equipment/system after assessing the deficiency in respect of the various ratings, performance parameters and capabilities and recover from the contract price an amount equivalent to the damages as determined by the Employer. Such damages shall, however be limited to the cost of replacement of the equipment(s)/system(s), replacement of which shall remove the deficiency so as to achieve the guaranteed performance. These parameters/capacities shall be termed as “Category-II” Guarantees.

3.00.00 AMOUNT OF LIQUIDATED DAMAGES (LD) APPLICABLE FOR GUARANTEES

The rate of liquidated damages and acceptable shortfall limits for different guarantees shall be as under and such liquidated damages shall be deducted from the Contract Price.

Sl.No	Guarantee	Rate of Liquidated Damage (LD)	Acceptable Shortfall Limit with LD
i)	For shortfall in guaranteed SO_2 removal efficiency in percentage points under conditions stipulated in	US **$ 46,537** (US dollar Forty Six thousand five hundred	(-)0.25% point from the guaranteed SO2 removal

Sl.No	Guarantee	Rate of Liquidated Damage (LD)	Acceptable Shortfall Limit with LD
	clause 4.01.00 (i) of Sub-Section-VI, Part A, Section-VI.	thirty seven only) for every 0.1% point shortfall in guaranteed efficiency from the guaranteed value.	efficiency.
ii)	For increase in the limestone consumption of FGD system in T/hr under conditions stipulated in clause 4.01.00 (ii) of Sub-Section-VI, Part A, Section-VI.	US $ **282,143** (US Dollar Two hundred Eighty two thousand one hundred forty three only) for every 100 kg/hr increase in limestone consumption from the guaranteed value.	(+)10% of the guaranteed limestone consumption.
iii)	**Auxiliary Power Consumption** For increase in the auxiliary power consumption in KW guaranteed as per the requirements of clause 4.01.00 (iii), of Sub-Section-VI, Part A, Section-VI.	US $ **3275** (US dollar Three thousand two hundred and seventy five only) for every KW increase in the power consumption from the guaranteed value.	(+) 1% of the guaranteed auxiliary power consumption

NOTE :

i) Each of the liquidated damages specified above shall be independent and these liquidated damages shall be levied concurrently as applicable.

ii) If the contract currency is other than US dollars, then the liquidated damages shall be in equivalent amount in contract currency based on Bill selling exchange rate of State Bank of India prevailing on the date of award of contract.

iii) All these liquidated damages for short fall in performance shall be deducted from the contract price as detailed in accompanying General Conditions of Contract (GCC)/ Special Conditions of Contract (SCC)

iv) Contractor's aggregate liability to pay liquidated damages for failure to attain the functional guarantee shall not exceed twenty five percent (25%) of the Contract Price.

v) The LD values are applicable on per unit basis.

4.00.00 **GUARANTEES PARAMETERS**

4.01.00 **Guarantees Under Category-I**

The Performance Guarantees which attract Liquidated Damages (LD) are as follows:

The following shall be guaranteed by the Bidder under guarantee point condition 3.00.00 of Sub- Section-V, Part-A of section- VI:

(i) SO2 removal Efficiency

The Contractor shall Guarantee that SO_2 removal efficiency shall not be less than 96.997 % under guarantee point conditions (as specified in Clause 3.00.00, Sub-section-V, Part-A of Section-VI) at 660 MW unit load with worst coal firing. (To be conducted as per the stipulation of Cl. no. 6.00.00 of this sub-section.)

(ii) Limestone consumption of FGD system

Limestone consumption of FGD system in kg/hr under guarantee point conditions (as specified in Clause 3.00.00 Sub-section-V, Part-A of Section-VI) at 660 MW unit load with worst coal firing and SO2 removal efficiency of not less than 96.997 %.

(iii) Auxiliary Power Consumption

The Contractor shall guarantee the total auxiliary power consumption for the FGD plant in normal operation at the guarantee point conditions, as specified in Clause 3.00.00, Sub-Section-V, Part-A of Section-VI, inline with the requirements stipulated in clause 5.00.00 of this Sub-Section.

4.02.00 **Guarantees Under Category-II**

The parameters/capabilities shall be demonstrated for various systems/ equipments shall include but not limited to the following:-

(i) Wet ball Mill capacity at rated fineness

The contractor shall demonstrate the guaranteed capacity of each limestone pulverizer under the following conditions:

i) Limestone fineness : 90% or higher (as per the requirement of the absorber) through 325 mesh. (for spray tower process) or 90 % or higher (as per the requirement of the absorber) through 200 mesh (for jet bubbling process).

ii) Limestone Quality : All available quality from the specified range.

Contractor shall demonstrate the above capacity with the originally installed grinding elements in nearly worn-out condition as mutually agreed for the purpose of ascertaining wear life of any of the wear parts.

(ii) Wet ball Mill wear parts guarantee

Contractor shall demonstrate the life of wet ball Mill wear parts in line with requirements stipulated in Part B of the Technical Specification. The establishment of the above guarantee shall be based on the operating records available at the Power station and will be computed for each pulverizer based on actual total hours of operation.

(iii) Wet ball Mill ball consumption

Contractor shall guarantee ball consumption per ton of limestone throughput in line with requirements stipulated in Part B of the Technical Specification. Contractor shall furnish the minimum ball diameter below which the balls shall be replaced.

(iv) Vacuum Belt Filter Capacity

Contractor shall demonstrate the capacity of the Vaccum Belt Filters to dewater the quantity of gypsum with the specified purity and moisture content as specified in Part B of the Technical Specification.

(v) Gypsum Purity

The contractor shall demonstrate that the purity of the gypsum produced shall not be less than 90%, chloride content shall not be more than 100ppm and the moisture content shall not be more than 10% for the range of specified coal(s) and limestone.

(vi) Waste Water

The Contractor guarantees that the maximum purge flow rate to waste water treatment system for the complete plant shall be $10m^3/hr$ averaged over a 24 hour period from each unit.

(vii) Performance characteristics of booster fans (capacity, head developed, etc.).

(viii) Margins on Booster Fan:

Booster Fans - As specified in Part B of **Technical Specifications**

(ix) Passenger cum Goods Elevator for FGD absorber & Limestone Grinding Building: Over load tests, travel and hoist speed checks.

(x) Noise

All the plant, equipment and systems covered under this specification shall perform continuously without exceeding the noise level over the entire range of output and operating frequency specified in Part-C of Section-VI of the technical specifications.

Noise level measurement shall be carried out using applicable and internationally acceptable standards. The measurement shall be carried out with a calibrated integrating sound level meter meeting the requirement of IEC 651 or BS 5969 or is 9779.

Sound pressure shall be measured all around the equipment at a distance of 1.0 m horizontally from the nearest surface of any equipment/ machine and at a height of 1.5 m above the floor level in elevation.

A minimum of 6 points around each equipment shall be covered for measurement. additional measurement points shall be considered based on the applicable standards and the size of the equipment. the measurement shall be done with slow response on the a - weighting scale. the average of a-weighted sound pressure level measurements expressed in decibels to a reference of 0.0002 micro bar shall not exceed the guaranteed value. corrections for background noise shall be considered in line with the applicable standards. all the necessary data for determining these corrections, in line with the applicable standards, shall be collected during the tests.

(xi) Mist Outlet Droplet Content

The mist eliminator outlet droplet content shall be guaranteed to be $\leq$ 20 mg/Nm3 at absorber outlet measured over a period of 24 hrs continuous operation.

Mist outlet-droplet content shall be measured as per applicable clauses in VDI Norm 3679 and the Contractor shall carry out the tests as per the test procedure approved by the Employer.

(xii) Availability of FGD Plant

The Contractor shall guarantee the maximum availability of FGD Plant for the range of coal and limestone specified inline with the requirements stipulated in clause 7.00.00 of this Sub-Section

(xiii) Air Conditioning System

A. Following shall be demonstrated at Shop

1) Capacity and static pressure of AHU fans at its rated duty point.

B. Following shall be demonstrated at Site

1) Capacity (TR) of air cooled condensing units (D-X type) for A/C system of FGD control room building.

2) Guaranteed room conditions during summer for all the Air conditioned areas.

3) Vibration and noise level of condensing units & centrifugal fans of AHUs.

(xiv) Ventilation System

A. Following shall be demonstrated at Shop

1) Capacity and discharge pressure of pumps of UAF units at its rated duty point of Ventilation system.

2) Capacity and static pressure of UAF fans at its rated duty point of Ventilation system.

B. Following shall be demonstrated at Site

1) Vibration & Noise level of centrifugal fans & pumps of UAF units.

(xv) **Equipment Cooling Water System**

i) Vibration, noise and parallel operation without hunting & abnormal noise and with flow sharing within 10% of each other at the rated duty point shall be demonstrated at site.

ii) Design heat load of plate type heat exchangers and Inlet & Outlet temperatures of the Plate type heat exchangers on the primary and secondary side to be demonstrated at site. Pressure drop across the Plate type heat exchanger on the primary & secondary water circuit to be demonstrated at site.

(xvi) Raw water pumps, DMCW pumps, ACW pumps

Capacity and head and power consumption of all the pumps at the rated duty point (to be demonstrated and proved at shop with the respective job motors).

Vibration, noise level and parallel operation of all the pumps at the rated duty point shall be demonstrated at site.

(xvii) Cooling Tower

The cold water temperature as indicated by bidder shall be guaranteed by the bidder for the design condition of flow, range, ambient wet bulb temperature relative humidity and guaranteed power consumption.

(xviii) Capacity of limestone handling system and Gypsum Handling System:

The contractor shall demonstrate the rated capacities of each belt conveyor for limestone and gypsum and the associated equipments.

5.00.00 AUXILIARY POWER CONSUMPTION (PA)

The unit auxiliary power consumption shall be calculated using the following relationship.

$P_a = P_u + T_L$

P_a = Guaranteed Auxiliary Power Consumption.

P_u = Power consumed by the auxiliaries of the unit under test.

T_L = Losses of the transformers supplied by bidder based on works test reports.

While guaranteeing the auxiliary power consumption the bidder shall necessarily include all continuously operating auxiliaries under this package. The auxiliaries to be considered shall include but not be limited to the following:

i. Absorber Recirculation Pump(s)

ii. Absorber Oxidation Air Blower(s)

iii. Absorber Oxidation Tank Agitators

iv. Gypsum Bleed Pumps

v. Limestone Gravimetric feeder, Wet ball mill and their integral Auxiliaries

vi. Limestone Slurry Pump(s)

vii. Vacuum Belt Filter, Vacuum Pump and its integral auxiliaries

viii. Power consumption per unit of Booster water pump for process water if provided.

ix. 33.33% of Power consumption of working Process water pump(s)

x. Mist Eliminator Wash Water pump(s)

xi. Power consumption of Clarified Booster water pump divided by the number of units in the project (as applicable).

xii. Clarified water pump (as applicable)

xiii. DM Cooling (normally working) Water pump one(1) to supply cooling water on the primary (DM) side of the plate type heat exchangers in the closed loop Equipment cooling water system.

xiv. Auxiliary Cooling (normally working) water pump one(1) to supply cooling water on the secondary side of the plate type heat exchangers in the closed loop Equipment cooling (unit auxiliary) water system.

xv. Cooling tower which cools down the secondary cooling water.

xvi. Booster Fans.

xvii. Power consumption of Limestone Slurry Tank Agitator(s) divided by the number of units in the project.

xviii. Power consumption of Filtrate Pump(s) divided by the number of units in the project.

xix. Power consumption of Belt Filter Wash Water Pump divided by the number of units in the project.

xx. Power consumption of Hydro-cyclone Waste Water Sump Pump and Waste Water Pump divided by the number of units in the project.

xxi. Power consumption of all other continuous running Agitators divided by the number of units in the project.

xxii. Air Conditioning System (*)

33.33% of Power consumption at motor input terminals of working units (i.e. excluding stand-by) at its rated duty point of compressor and condenser fans of air cooled condensing unit, Air handling unit (AHU) fans for the Air conditioning system of FGD Control Room Building.

xxiii. 33.33% of power consumption at motor input terminal of fan of UAF (*)

((*) Above guaranteed power consumption values shall be at 20 deg C for centrifugal fans of AHUs and at 30 deg C for centrifugal fans of UAF and at an elevation of RL (+) 457.5 m for both AHUs and UAF centrifugal fans.)

xxiv) Guaranteed power consumption of conveyors and associated equipments (vibrating screen, crushers, belt feeders, paddle feeders) of a single stream for limestone and gypsum handling at rated capacities.

The equipments listed above for calculating auxiliary power consumption are indicative. Any other equipment required for continuous operation of the system shall

also be considered for calculation of auxiliary power consumption. Power consumption of all equipments provided on unitized basis shall be included in the unit auxiliary power consumption. For common station auxiliaries, the power consumption shall be assigned to each unit based on unit load for the purpose of calculating the unit auxiliary power consumption.

Note :

1. The bidder shall furnish a list of equipments to be covered under auxiliary power consumption, which shall be subject to Employer's approval.
2. The equipments listed above for calculating auxiliary power consumption are indicative. Any other equipment required for continuous operation of the system shall also be considered for calculation of auxiliary power consumption.

6.00.00 METHOD OF COMPUTING TEST EFFICIENCY OF FGD

The performance tests shall be carried out in accordance with ASME PTC 40 (1991) code. The details of the test shall, however be mutually agreed upon between the employer and the contractor.

7.00.00 METHOD OF COMPUTING AVAILABILITY

The Contractor shall guarantee 98 % availability of FGD plant for a continuous period of 120 days. An availability guarantee test shall be conducted to assure this level of availability for a period of 240 days as per the procedure indicated below.

Availability 'A' in %:

$$A = \frac{Tc \times 100\%}{Tk}$$

Tc – recorded time of FGD operation, expressed in hours,

Tk – recorded time of boiler operation, expressed in hours,

However, it is required that:

(i) In order to calculate the FGD availability, operation hours will be counted except boiler start-ups when the operation hours counting will start on the moment of shut down of all oil burners,

(ii) FGD will be regarded as a FGD in operation, when by-pass damper is closed and total flow of flue gas from boiler goes via FGD, and SO2

content is below 100 mg/Nm3 (dry basis at 6% O_2) in cleaned flue gas for the range of specified coals & loads.

(iii) If FGD is out of operation during the boiler operation time as a result of the Employer's decision, this time will not be counted as boiler operation time for calculating the FGD availability,

(iv) Boiler operation hours will be counted based on the recorded boiler operation hours and the recorded data will be made available to the Contractor by the Employer.

Mandatory spares have been identified in the Employer. Contractor can use the mandatory spares supplied under the contract during this period in agreement with the Employer. However, if other additional spares are required for demonstration of availability demonstration guarantee, Bidder to should clearly indicate along with their offer.

If the calculated availability after 120 days availability test is lower than the guaranteed value, the Contractor will undertake actions as per clause 2.04.00 (ii) of this Sub-Section to achieve the guaranteed availability.

SUB-SECTION-VII

MANDATORY SPARES

CLAUSE NO.	MANDATORY SPARES

1.00.00 **GENERAL**

The Bidder shall include in his scope of supply all the necessary Mandatory spares, Start-up and commissioning spares and Recommended spares and indicate these in the relevant schedules of the Bid Forms & Price Schedules. The general requirements pertaining to the supply of these spares is given below:

1.01.00 **MANDATORY SPARES**

a) The list of mandatory spares considered essential by the Employer is indicated in the list enclosed to this Sub-Section. The bidder shall indicate the prices for each and every item (except for items not applicable to the bidders design) in the 'Schedule of Mandatory Spares' whether or not he considers it necessary for the Employer to have such spares. If the bidder fails to comply with the above or fails to quote the price of any spare item, the cost of such spares shall be deemed to be included in the contract price. The bidder shall furnish the population per unit of each item in the Bid Forms & Price Schedules. Whenever the quantity is mentioned in "sets" the bidder has to give the item details and prices of each item.

b) Whenever the quantity is indicated as a percentage, it shall mean percentage of total population of that item in the station (project), unless specified otherwise, and the fraction will be rounded off to the next higher whole number. Wherever the requirement has been specified as a 'set' (marked by **) it will include the total requirement of the item for a unit, module or the station as specified. Where it is specified as 'set' (marked by*) it would mean the requirement for the single equipment / system as the case may be. Also one set for the particular equipment. e.g. 'set' of bearings for a pump would include the total number of bearings in a pump. Also the 'set' would include all components required to replace the item; for example, a set of bearings shall include all hardware normally required while replacing the bearings.

c) The assembly / sub assembly which have different orientation (like left hand, right hand, top or bottom), different direction of rotation or mirror image positioning or any other regions which result in maintaining two different sets of spares to be used for subject assembly / sub-assembly shall be considered as different type of assembly/sub-assembly.

d) The Employer reserves the right to buy any or all the mandatory spare parts.

e) The prices of mandatory spares indicated by the Bidder in the Bid Proposal sheets shall be used for bid evaluation purposes.

f) All mandatory spares shall be delivered at site at least two months before scheduled date of initial operation of the first unit. However, spares shall not be dispatched before dispatch of corresponding main equipments.

g) Wherever quantity is specified both as a percentage and a value, the Bidder has to supply the higher quantity until & unless specified otherwise.

1.02.00 **RECOMMENDED SPARES**

a) In addition to the spare parts mentioned above, the Contractor shall also provide a list of recommended spares for 3 years of normal operation of the plant and indicate the list and total prices in relevant schedule of the Bid Forms & Price Schedules. This list shall take into consideration the mandatory spares specified in this Sub-Section and should be independent of the list of the mandatory spares. The Employer reserves the right to buy any or all of the recommended spares. The recommended spares shall be delivered at project site at least two months before the scheduled date of initial operation of first unit. However, the spares shall not be dispatched before the dispatch of the main equipment.

b) Prices of recommended spares will not be used for evaluation of the bids. The price of these spares will remain valid up to 6 months after placement of Notification of Award for the main equipment. However, the Contractor shall be liable to provide necessary justification for the quoted prices for these spares as desired by the Employer.

1.03.00 **START-UP □ COMMISSIONING SPARES**

a) Start-up & commissioning spares are those spares which may be required during the start-up and commissioning of the equipment/system. All spares used till the Plant is handed over to the Employer shall come under this category. The Contractor shall provide for an adequate stock of such start up and commissioning spares to be brought by him to the site for the plant erection and commissioning. They must be available at site before the equipments are energized. The unused spares, if any, should be removed from there only after the issue of Taking Over certificate. All start up spares which remain unused at the time shall remain the property of the Contractor.

1.04.00 The Bidder shall include in his scope of supply all the necessary Mandatory spares, Start-up and commissioning spares and indicate these in the relevant schedules of the Bid Forms & Price Schedules. The general requirements pertaining to the supply of these spares is given below:

2.00.00 The Contractor shall indicate the service expectancy period for the spare parts (both mandatory and recommended) under normal operating conditions before replacement is necessary.

□.00.00 All spares supplied under this contract shall be strictly inter-changeable with the parts for which they are intended for replacements. The spares shall be treated and packed for long storage under the climatic conditions prevailing at the site e.g. small items shall be packed in sealed transparent plastic with desiccators packs as necessary.

4.00.00 All the spares (both recommended and mandatory) shall be manufactured along with the main equipment components as a continuous operation as per same specification and quality plan.

□.00.00 The Contractor will provide Employer with cross-sectional drawings, catalogues, assembly drawings and other relevant documents so as to enable the Employer to identify and finalize order for recommended spares.

□.00.00	Each spare part shall be clearly marked or labeled on the outside of the packing with its description. When more than one spare part is packed in a single case, a general description of the content shall be shown on the outside of such case and a detailed list enclosed. All cases, containers and other packages must be suitably marked and numbered for the purposes of identification.
□.00.00	All cases, containers or other packages are to be opened for such examination as may be considered necessary by the Employer.
□.00.00	The Contractor will provide the Employer with all the addresses and particulars of his sub-suppliers while placing the order on vendors for items/components/ equipments covered under the Contract and will further ensure with his vendors that the Employer, if so desires, will have the right to place order for spares directly on them on mutually agreed terms based on offers of such vendors.
□.00.00	The Contractor shall warrant that all spares supplied will be new and in accordance with the Contract Documents and will be free from defects in design, material and workmanship.
10.00.00	In addition to the recommended spares listed by the Contractor, if the Employer further identifies certain particular items of spares, the Contractor shall submit the prices and delivery quotation for such spares within 30 days of receipt of such request with a validity period of 6 months for consideration by the Employer and placement of order for additional spares if the Employer so desires.
11.00.00	The Contractor shall guarantee the long term availability of spares to the Employer for the full life of the equipment covered under the Contract. The Contractor shall guarantee that before going out of production of spare parts of the equipment covered under the Contract, he shall give the Employer at least 2 years advance notice so that the latter may order his bulk requirement of spares, if he so desires. The same provision will also be applicable to Sub-contractors. Further, in case of discontinuance of manufacture of any spares by the Contractor and/or his Sub-Contractors, Contractor will provide the Employer, two years in advance, with full manufacturing drawings, material specifications and technical information including information on alternative equivalent makes required by the Employer for the purpose of manufacture/procurement of such items.

S□ N□.	D□□□r□□□□□	N□□. □S□□□
1.01.00	A. Booster Fans	
	1. Fan assembly (excluding fan body)	2 nos
	2. Booster fan motor	1 no.
	3. Fan bearings	3 sets
	4. Booster fan motor bearings	1 set
	5. Spares for blade bearing Assembly	
	5.1 Bearings	3 sets
	5.2 'O' rings	5 sets
	5.3 Bushes	4 sets
	5.4 Metallic rings	4 sets
	5.5 Intermediate piece (if applicable)	1 set
	6. Lube Oil / Hydraulic Oil system	
	6.1 Pump assembly	3 nos. of each type
	6.2 Pump motor	1 no. of each type & rating
	6.3 Pressure regulator	3 nos.
	6.4 Filters	6 nos.
	6.5 Coupling between oil pump & motor	3 nos.
	7. Fan Blades	2 sets
	8. Coupling between Fan & Motor	3 sets.
	9. Hydraulic servomotor	2 nos.
	10. Booster fan impeller liner	3 sets
	11. Booster fan casing liner	3 sets
1.02.00	Gates in Flue Gas System	
	1. Seals	3 sets of each type (Set means complete replacement for one gate)
	2. Actuator	1 no. of each type
1.03.00	Absorber	
	1. Liner Material	15% coverage of each material and thickness for one Unit/absorber
	2. Absorber Spray/Oxidation nozzles	20% of each type
	3. Absorber Mist Eliminator Washing Nozzles	20% of each type
	4. Absorber Mist Eliminator	15% of each type
1.04.00	Oxidation Air Compressor	
	1. Impeller Assembly	2 nos.
	2. Bearings	3 nos. of each type
1.05.00	Agitators	
	(For Absorber Oxidation Tank, Mill Separator Tank, Limestone Slurry Preparation Tank and any other tank provided with agitators)	

	1. Impeller Assembly	2 nos. of each type
	2. Bearing Assembly	3 nos. of each type
	3. Motor	1 no. of each type
	4. Belt and Pulley (If applicable)	3nos. of each type
	5. Gear Box Assembly (If Applicable)	2 nos. of each type
1.06.00	Slurry Pumps	
	(Absorber Slurry Recirculation Pump, Gypsum Bleed Pumps, Mill Circuit Pump, Limestone Supply Pumps and any other slurry pumps)	
	1. Impeller Assembly	2 nos. of each type
	2. Casing Liners	3 nos. of each type
	3. Seals	3 sets of each type
	4. Bearings	3 nos. of each type
	5. Motor	1 no. of each type
	6. Motor-Pump Coupling	3 nos. of each type
1.07.00	Hydro-cyclones	
	(Mill , Gypsum Primary Dewatering, Secondary Waste Water and any other Hydrocyclone)	
	1. Hydro-cyclone Isolation Valve	20% of each type OR 2 nos. whichever is higher
	2. Hydro-Cyclone	20% of each type OR 2 nos. whichever is higher
	3. Hydro-Cyclone rubber lining	20% of each type OR 2 nos. whichever is higher
1.08.00	Feeders	
	1. Belt	3 sets *
	2. Belt drive motor	1 nos.
	3. Belt drive reducer	2nos.
	4. Speed Reducer Assembly	2 sets*
	5. Weighing Instruments	1 set*
	6. Feeder weighing roll	1 no.
	7. Gravimetric feeder gate actuator assembly	1 no.
	8. Counter assembly of feeder complete	1 no.
	9. Feeder head pulley assembly	2 nos.
1.09.00	Limestone Mills	
	1. Mill Wear Parts (Liners) &Grinding element	3 sets
	Note : One set of Mill Wear Parts (Liners) above is defined as under :	
	1 Set = (Grinding elements needed for complete replacement of one mill) X (8000 x 1) / GWL, rounded off to nearest higher whole number. Where : GWL = Guaranteed wear life of Mill Wear Parts as offered by the bidder.	

	2. Mill Motor	1 no.
	3. Auxiliary Motor	1 no.
	4. Gear box internals (including Bearings and Seals)	2 sets *
	5. Complete Gear Box	3 sets *
	6. Mill motor Bearings	1 sets *
	7. Lube Oil / Grease System	
	7.1 Pump assembly	3 nos. of each type
	7.2 Motor	1 nos. of each type
	7.3 Pressure regulator	3 nos. of each type
	7.4 Filters	6 nos. of each type
	7.5 Pump & Motor coupling	3 nos. of each type
1.10.00	Slurry Valves	3 no. of each type and size
1.11.00	Slurry Line Bends	3 nos. of each type and size
1.12.00	Vacuum Belt Filter	
	1. Filter Cloth	6 sets
	2. Belt (if applicable)	3 sets
	3. Vacuum Box Seals	2 sets
	4. Drive Motor (if applicable)	1 no.
1.13.00	Vacuum Pumps	
	1. Pump Impeller Assembly	2 nos.
	2. Pump Bearing	3 sets
	3. Seals	3 sets
	4. Motor	1 no.
1.14.00	Vacuum Breaker Valves	
	1. Valve Assembly	3nos.
	2. Actuator	1 no.
1.15.00	Sump Pumps	
	1. Complete Impeller Assembly	2 nos. of each type
	2. Casing Liners	3sets* of each type
	3. Bearing	3sets*
	4. Motor	1 no. of each type
	5. Pump discharge valve assembly	3 nos. of each type
1.16.00	Horizontal Centrifugal Pumps	
	1. Complete Impeller Assembly	2 nos. of each type
	2. Casing Liners	3sets* of each type
	3. Bearing	3sets*
	4. Motor	1 no. of each type
	5. Pump discharge valve assembly	2 nos. of each type

Note: 1. Any change in size, material, design etc, which obviates one to one replacement of the part shall be considered a different type. * Unless otherwise stated, a set shall mean complete replacement for one equipment.

2.00.00 LIME STONE AND GYPSUM HANDLING

S. N.		I□ A□□□□□□□□ (Y□N)	ITEM	QUANTITY	U□□□
A)			**IDLERS**		
1	i)		35° Troughing idlers complete with base frame and mounting brackets etc.	2.5 %	of population of each type
	ii)		Rolls for (i) above	1%	of population of each type
2	i)		Troughing idlers complete with base frame & mounting brackets ctc.(for belt feeder).	30%	of population of each type
	ii)		Rolls for (i) above	30%	of population of each type
3	i)		35^0 impact idlers complete with mounting brackets and base frame etc.	25%	of population of each type
	ii)		Rolls for (i) above	25%	of population of each type
4			35^0 troughing training idler complete with base frame and brackets etc. (if used)	10%	of population of each type
5			Transition idler complete as in (1) above	10%	of population of each type
6			Flat return idlers complete with mounting brackets etc.	2%	of population of each type
7			Flat return idlers complete with mounting brackets etc.(for belt feeders)	30%	of population of each type
8			Flat return trainer complete with mounting brackets etc.	10%	of population of each type
9			Belt cleaning spiral rubber disc return idler complete with mounting brackets etc.	20%	of population of each type
10	i)		Two roll 10° troughing return idler assy	2%	of population of each type
	ii)		Rolls for (I) above	2%	of population of each type
11			SS idlers	25%	of population of each type
12			Any other type of idlers	10%	of population of each type

B)			**CON□EYOR GEAR BO□ES**		
	i)		Input shafts with pinion	1	set of each type and rating
	ii)		Oil seals	2	sets of each type and rating
	iii)		Bearings	1	set of each type and rating
	iv)		Hold back device	2	nos. of each type and rating
	v)		Cooling fan with cover	2	nos.of each type and rating
	vi)		Complete gear box assy with hold back device	1	set of each type and rating for population upto 10 nos.
				2	set of each type and rating for population more than 10 nos.
C)			**CON□EYOR DRI□E AND CON□EYOR BELT**		
□)			**G□□r C□□□□□□**		
	i)		All type of drive couplings including gear Coupling	2	nos. of each type
	ii)		Bolts for gear coupling	2	sets of each size
	iii)		Seal kit for gear coupling (o-ring)	2	sets of each type
□)			**F□□d C□□□□□□**		
	i)		Fluid Coupling complete	1	no. of each type and size
	ii)		Multi Disc assembly (for fluid coupling)	4	nos each type and size
	iii)		Resilient Drive plate assy.	1	no. of each type and size
	iv)		Bearings	1	no. of each type and size
	v)		Seal kit for fluid coupling	2	sets of each size
	vi)		Fusible plug	10	nos. of each size
	vii)		Complete actuator and engaging assembly (including motor, gear box etc.)	1	set of each type
	viii)		Oil Cooler assembly (if applicable)	1	set of each type
	ix)		Oil pump-motor set (if applicable)	1	set of each type
	x)		Oil filters	5	sets of each type
	xi)		Oil/Cooler valves (if applicable)	2	nos. of each type

□)			**B□□□□□**		
			C□□□□□□r B□□□		
	i)		Main Conveyors	2	drum length of 250 m of each type, size and rating if total population of particular type, size and rating of conveyor is equal to or more than 2500 m
				1	drum length of 250 m of each type, size and rating if total population of particular type, size and rating of conveyor is less than 2500 m
	ii)		Belt feeder & bunker seal belt, as applicable	one	complete length of each type
d)			**Br□□□□**		
	i)		Brakes	1	no of each size & type
	ii)		Brake shoes	2	sets of each size
D)			**PULLEYS**		
	i)		Pulleys complete with shaft excluding bearing & plummer blocks (complete with lagging)	1	no. of each type and size in pulley drum and shaft dia.(for population upto 10 Nos)
				2	no. of each type and size in pulley drum and shaft dia.(for population more than 10 Nos)
	ii)		Plummer Block complete with bearings & sleeves	2	no. each type and size
	iii)		SS Pulleys complete with shaft excluding bearing & plummer blocks (complete with lagging)	1	no. of each type and size in pulley drum and shaft dia.
E)			**BELT CLEANERS AND SKIRT BOARD**		
	i)		Modular segments for belt cleaner	5	%of total population of each type & size
	ii)		Modular segments skirt rubber for skirt board	5	%of total population of each type & size
	iil)		Skirt Rubber	5	%of total population of each type & size

	iv)		Complete belt cleaner (internal / external)	2	%of total population of each type & size
F)			**IN-LINE MAGNETIC SEPARATORS**		
	i)		Cleated conveyor belt	1	set
	ii)		Motor, gear box drive assy. complete	1	set
	iii)		Pulleys with plummer block & bearings	1	set of each size & type
	iv)		Sheaves	1	no. of each size & type
	v)		V-belts	2	no. of each size & type
G)			**LIME SAMPLER**		
	i)		Plummer block	1	no. of each type and size
	ii)		Hammers	1	set of each type and size
	iii)		Liner plate	1	set
	iv)		Cutter lip	1	no.
	v)		Cutter seal	1	no.
	vi)		V-belts (for crusher)	1	sets
	vii)		Hammer pins	1	sets of each type and size
	viii)		Pulley	1	no. of each type and size
	ix)		Conveyor belt	1.2	times length of each type and rating
	x)		Gear box assembly for conveyor	1	no. of each type and rating
	xi)		Gear box drive assy, for primary and secondary samplers	1	set of each type and rating
	xii)		Hydraulic pump with motor and coupling	1	set of each type
	xiii)		Hydraulic motor	1	set of each type
	xiv)		Hydraulic cylinder	1	set of each type
	xv)		Cylinder sealing kit	2	set of each type
	xvi)		Set of hoses	2	set of each type
	xvii)		Coupling with grid for primary sampler	2	sets
	xviii)		Screw conveyor gear box assembly	1	set

H)			**ELECTRIC HOISTS**		
	i)		Brake linings	2	sets of each type
	ii)		Rope guide & rope tightner	1	no. of each type
	iii)		Limit switch	2	nos. of each type & size
	iv)		Gear box/gear set	2	sets of each type
	v)		Motor/geared motor	1	no of each type & rating
	vi)		Drum bearing	1	set of each type & rating
I)			**FLAP GATES (INCLUDING THAT OF TRIPPERS)**		
	i)		Limit switch	8	nos. of each type & rating
	ii)		Actuator (complete with motor, gear box,limit switches etc.)	1	nos. of each type & rating
	iii)		Oil seals of Actuator	2	nos. of each type & rating
	iv)		Flap gate shaft	1	nos. of each type & rating
	v)		Pressure nut	12	nos. of each type & size
□)			**DUST SUPRESSION□SER□ICE WATER□POTABLE WATER□ COOLING WATER**		
	a)		Pump impeller with key & nut	1	set of each type & size
	b)		Pump Shaft	1	no of each type & size
	c)		Bearings	1	sets each type & size
	d)		Wearing rings	2	sets of each type & size
	e)		Shaft sleeve	2	sets of each type & size
	f)		Bushings	2	sets of each type & size
	g)		Coupling bolts & nuts (with bushes) 2 sets	1	sets each type & size
	h)		Spray nozzles	50	nos.of each type & size
	i)		Spray nozzles (for plain water dust suppression)	25	nos.of each type & size
	j)		Solenoid valves	5	% of each type and size
	k)		Globe valve / plug valves	10	% of each type and size
	l)		Gate valve	2	nos. of each size

	m)		Strainers	1	no. of each type
	n)		Compressor		
	(i)		Air filter element	8	Nos.
	(ii)		Oil filter	6	Nos.
	(iii)		Discharge Check Valve	3	Nos.
	(iv)		Oil Pump Parts (including distance ring, eccentric rings, Pump element, Pin, Key O, Ring) as applicable	2	Sets
	(v)		Inlet Valve Assembly	2	Nos.
	(vi)		Electronic regulator	3	Nos.
K)			**BUCKET ELE□ATOR**		
	(i)		Buckets	10%	of total population
	(ii)		Belt for bucket elevator	10%	of total length
	(iii)		Linkages	20%	of total population
L)			**□ENTILATION SYSTEM**		
	i)		V-Belt	1	set of each type
	ii)		Pre-filter element of pressurizing fans	2	sets of each type
	iii)		Foundation Rubber pads	1	sets of each type & size
	iv)		Bearings	1	sets of each type & size
	v)		Plummer Blocks	1	set of each type & size
M)			**TRA□ELLING TRIPPER**		
	I)		Complete drive assembly including gear box, coupling, brake etc.	1	Set
	ii)		Complete internals of speed reducer (including input shaft, output shaft, gearset)	1	set of each size & type
	iii)		Bearings for reducer	2	Sets
	iv)		Drive axle with wheels, plummer blocks, bearings etc.	1	Set
	v)		Oil seals	2	nos. of each size
	vi)		Non-drive axle with wheels plummer blocks, bearings etc.	1	set of each type
	vii)		Flap gate actuator with motor, gear box, position / thrust switches	1	set of each type
	viii)		Chain assembly wiith sprockets	1	set of each type & size

	ix)		Festoon Roller assembly for flexible cable	4	Nos
	x)		Pulleys and plummer block bearings	1	no of each type
	xi)		Plummer block with bearing for cable reel drums	1	set of each type
N)			**ELE□ATOR**		
	a.		**Br**ake		
			1. Tool to brake	1	No.
			2. Fan	1	No.
			3. Magnet coil with housing pads	2	Nos.
			4. Brake pads	6	Nos.
			5. Adjusting sleeve	2	Nos.
			6. Fixed brake disc	2	Nos.
	b.		**W□r□ G□□r**		
			1. Worm gear	1	no.
			2. 'O' ring	2	nos. of each type
			3. Sealing ring	2	nos. of each type
	c.		**D□□r Fr**ont		
			1. Bearing	2	Nos.
			2. Roller	3	Nos.
			3. Bushing	2	Nos.
	d.		**L**imit **C**ams		
			1. Sensor	1	No
			2. Switch	2	Nos.
			3. Switch arm	2	Nos.
	e.		**CAD**		
			1. Guide roller	50	% of the total ones installed each type or minimum 1 no. whichever is higher
			2. Switch	1	no.
	f		**S□d□□ D□□r**		
			1. Rollers	4	nos. of each type
	g.		**M**achine **r**y		
			1. Guide roller	2	nos.

			2. Pinion	1	no.
			3. Rubber inserts	6	nos.
			4. Grove ring	6	nos.
			5. Brake motor	1	no.
	□.		**C□□□ □r□□□□**		
			1. Ball bearing	2	nos. of each type

N□□□:

1. Unless stated otherwise a 'set' means items or sub-items required for each type/size range of the assembly/ sub-assembly, required for replacement in one main equipment. It is further intended that the assembly/ sub-assembly which have different orientation (like left hand or right hand, top or bottom), different direction of rotation or mirror image positioning or any other reasons which result in maintaining two different sets of the spares to be used for the subject assembly/ sub-assembly, these shall be considered as different types of assembly/ sub-assembly.
2. Wherever quantity has been specified as percentage (%), the quantity of mandatory spares to be provided by contractor shall be the specified percentage (%) of the total population of the plant. In case the quality so calculated happens to be a fraction, the same shall be rounded off to next higher whole number.
3. Whenever the quantities have been indicated for each type, size, thickness, material, radius, range etc., these shall cover all the items supplied and installed and the breakup for these shall be furnished in the bid.
4. In case spares indicated in the list are not applicable to the particular design offered by the bidder, the bidder should offer spares applicable to offered design with quantities generally in line with the approach followed in the above list.
5. Price of each and every item is to be given separately

3.00.00	**AIR CONDITINING AND □ENTIALTION SYSTEM**	
1.0	**A**□r han **d**ling unit **(**fo**r** each mo **d**e□**)**	
1.1	V-belts for AHU Blower	2 Sets
1.2	AHU Blower bearing	1 Set
1.3	Blower motor bearing	1 Set
1.4	Filters at suction and discharge of all AHUs	25% of installed population
2.0	**U**nita **r**y □**r** fil **r**ation unit	
2.1	*Supply Air fans*	
2.1.1	V-belts for supply air fans	2 Sets
2.1.2	Supply air fan bearings	1 Set
2.2	*UAF Pump*	
2.2.1	Pump bearings	1 Set
2.2.2	Impeller for pump	1 no.
2.2.3	Pump Shaft	1 no.
2.2.4	Shaft sleeves	1 Set
2.2.5	Gland Packings for pumps	1 Set
2.2.6	Nylon Filter	1 Set
2.2.7	Spray nozzles	5% of total population or 50 Numbers whichever is higher.
2.2.8	Water strainer	1 No.
2.2.9	Brass suction screen/strainer for unitary air filtration tank.	1 Set
2.2.10	Motor for Centrifugal fan for UAF	1 No
3.0	**C**□□**r**□□& **I**ns **r**umentation	

i)	Air-Conditioning System	
3.1	Electronic Transmitters	
3.1.1	Transmitters of all types and model no. (for the measurement of Pressure, differential pressure flow, level, temperature etc.)	5% or 1 No. of each type and model whichever is more. (to be divided into various ranges in proportion to main population)
3.2	Temperature elements	
3.2.1	RTD's*	5% or 1 No. which ever is more **
3.2.2	Thermo well * (With head assembly, terminal block and nipple)	5% or 1 No. which ever is more ** ** (to be divided into various insertion lengths in proportion to main population)
3.3	All types of Local Indicators	5% or 1 No. of each make, model and type whichever is more (to be divided to various ranges in proportion to main population of all make, model and type)
3.4	Process Actuated Switch Devices Includes all types of Pressure, differential pressure, flow, and temperature, and differential temperature, level switch Devices.	5% or 1No. of each type and model whichever is more.
3.5	Relative Humidity Sensors	1 No.
3.6	Geyserstat	1 No.
3.7	Local Humidity/Temperature indicators	2 Nos. each
4.0	**Pr□□□□□ C□□□□□□□□ P□□□□ (□□r l□ □□□□ P□□□□ □T□□□□□S□□ □□□□ P□□□□ □T□□□□ □□d A□r S□□□□ P□□□□ □□ A□□□□□□□)**	
4.1	Valves	10% or 1 No. of each type, class, size and model whichever is more.
4.2	2 way, 3way, 5way valve manifolds	10% or 1 No. of each type, class, size and model whichever is more.
4.3	Fittings	10% or 1 No. of each type, class, size and model whichever is more.

(II)	Ventilation System	
□.0	**M□□□□r□□□ l□□□r□□ □□□□**	
5.1	Pressure Gauge	1 No. (for centrifugal pumps of UAF units).
5.2	Level transmitter	1 No.
5.3	Pressure transmitter	1 No. (for UAF units)
6.0	**Pr□□□□□ C□□□□□□□□□ P□□□□□ (□□r l□ □□□□□ P□□□□□ □T□□□□□□S□□ □□□□□ P□□□□□ □T□□□□□ □□d A□r S□□□□□ P□□□□□ □□ A□□□□□□□□)**	
6.1	Valves	1 no. of each type, class, size and model
6.2	2 way valve manifold	1 no. of each type, class, size and model
6.3	Fittings	1 no. of each type, class, size and model

CLAUSE NO.	MANDATORY SPARES	
4.00.00	FIRE DETECTION AND PROTECTION SYSTEM	
	ITEM DESCRIPTION	**QUANTITY**
1.0	**DELUGE □AL□E ASSEMBLIES**	
1.1	Complete deluge valve assembly along with internals and accessories	
1.1.1	100 NB	10% or 1 No. of each type, class, size and model whichever is more.
1.1.2	80 NB	10% or 1 No. of each type, class, size and model whichever is more.
1.2	Clapper assembly complete (consisting of clapper seat rubber, screws, etc.)	
1.2.1	100 NB	10% or 1 No. of each type, class, size and model whichever is more.
1.2.2	80 NB	10% or 1 No. of each type, class, size and model whichever is more.
1.3	Solenoid coils	
1.3.1	100 NB	10% or 1 No. of each type, class, size and model whichever is more.
1.3.2	80 NB	10% or 1 No. of each type, class, size and model whichever is more.
2.0	**□AL□ES (BUTTERFLY)**	
2.1	Butterfly	
2.1.1	100 NB	10% or 1 No. of each type, class, size and model whichever is more.
2.1.2	80 NB	10% or 1 No. of each type, class, size and model whichever is more.
2.2	Disc (Butterfly)	
2.2.1	100 NB	10% or 1 No. of each type, class, size and model whichever is more.

	ITEM DESCRIPTION	QUANTITY
2.2.2	80 NB	10% or 1 No. of each type, class, size and model whichever is more.
2.3	Stem for Butterfly Valve	
2.3.1	100 NB	10% or 1 No. of each type, class, size and model whichever is more.
2.3.2	80 NB	10% or 1 No. of each type, class, size and model whichever is more.
2.4	**G**asket fo **r B**utte **r**fly Valve	
2.4.1	100 NB	10% or 1 No. of each type, class, size and model whichever is more.
2.4.2	80 NB	10% or 1 No. of each type, class, size and model whichever is more.
2.5	**B**ushing **B**ea **r**ing **(**butte **r**fly valve **)**	
2.5.1	100 NB	10% or 1 No. of each type, class, size and model whichever is more.
2.5.2	80 NB	10% or 1 No. of each type, class, size and model whichever is more.
3.**0**	**BASKET STRAINERS / Y-TYPE STRAINERS fo r H□W / M□W SPRAY SYSTEM**	
3.1	Strainer elements with o-rings and stiffeners.	
3.1.1	Y- Type strainer	
3.1.1.1	100 NB	10% or 1 No. of each type, class, size and model whichever is more.
3.1.1.2	80 NB	10% or 1 No. of each type, class, size and model whichever is more.
4.0	**M□W SPRAY SYSTEM**	
4.1	Spray Nozzles	10% or 10 No. of each type, class, size and model whichever is more.

	ITEM DESCRIPTION	QUANTITY
4.2	QB Detectors	10% or 20 No. of each type, class, size and model whichever is more.
5.0	**H□W SPRAY SYSTEM**	
5.1	Spray nozzles	10% or 10 No. of each type, class, size and model whichever is more.
5.2	QB Detectors	10% or 20 No. of each type, class, size and model whichever is more.
6.0	**FIRE DETECTORS**	
6.1	Multisensor detectors (Addressable)	10% or 10 No. of each type, class, size and model whichever is more.
6.2	Indicators assembly for smoke detectors provided in false ceiling (Response indicator)	10% or 10 No. of each type, class, size and model whichever is more.
6.3	LHS cable for conveyors	10% of each type, class, size and model whichever is more.
7.0	**CONTROL AND INSTRUMENTATION**	
7.1	**MEASURING INSTRUMENTS**	
7.1.1	All types of Local indicators	1 no. of each make, model and type
7.1.2	Process Actuated Switch Devices : (All types of Pressure, diff. pressure, flow, temperature, level switch devices).	1 no. of each type and model
7.1.3	All type of Electronic Transmitters and Ultrasonic Transmitters including sensors.	10% or 1 no. of each type and model whichever is more.
7.1.4	Limit switches for isolation valves	1 no. of each type
7.2	**PROCESS CONNECTION PIPING (F□r I**mpulse **P**iping / **T**ubing an **d A□r S**upply **P**iping as **A**pplicable **)**	

	ITEM DESCRIPTION	QUANTITY
7.2.1	Valves	1 no. of each type, class, size and model.
7.2.2	2 way, 3 way, 5 way valve manifolds	1 no. of each type, class, size and model.
7.2.3	Fittings	5% or 1 no. of each type, class, size and model whichever is more.
□.□	**CABLES**	
7.3.1	Pre fabricated cable of each type.	1 no. of each type, size and model .
7.3.2	Pre fabricated cable connector	1 no. of each type and model
7.3.3	Other cables (including core cable, short term fire proof cable, fibre optic cables etc)	5% of each type, pair/ core and size of actual installed quantity.
□.4	**FIRE ALARM PANEL □ REPEATER FIRE ALARM PANEL**	
7.4.1	Fuses	100% of population
7.4.2	Indicating lamps	100% of population
7.4.3	Push Button	10 Nos. of each type and rating
7.4.4	Power supply modules	10% or 1 No. of each type & rating whichever is more
7.4.5	Control modules, loop cards modules, isolator cards	10% or 1 No. of each type, whichever is more.
7.4.6	LCD display of each type unit of panel	1 No.
7.4.7	Cartridges for printers	2 Nos.
7.4.8	Interface unit / modules for non-addressable devices, auxiliary / output relay modules, control modules, supervisory control modules and any other electronic modules	10% or 1 No. of each type whichever is more.

	ITEM DESCRIPTION	QUANTITY
7.4.9	LED's of each type	100% of population.
7.4.10	Power supervision relay	4 Nos. of each type.
7.4.11	Fire screen / alarm buzzer	1 No. of each type

NOTE:	
1.	Wherever set is mentioned, one set of the spares of that item shall be for complete replacement of that particular item for one equipment.
2.	Any fraction of a item shall mean the next higher integer.
3.	Wherever quantity has been specified as percentage (%), the quantity of mandatory spares to be provided by contractor shall be the specified percentage (%) of the total population of the plant. In case the quantity so calculated happens to be fraction, the same shall be rounded off to next higher whole number.
4.	Wherever the quantities have been indicated for each type, size, thickness, material, radius, range etc., these shall cover all the items supplied and installed and the breakup for these shall be furnished in the bid.
5.	In case spares indicated in the list are not applicable to the particular design offered by the bidder, the bidder should offer spares applicable to offered design with quantities generally in line with the approach followed in the above list.

□.00.00 **CONTROL AND INSTRUMENTATION**

1.00.00	**CONTROL AND INSTRUMENTATION**	
1.01.00	**MEASURING INSTRUMENTS**	
1.01.01	1.1 All type of Transmitters including sensors.	10% or 1 no. of each type and model whichever is more.
1.01.02	1. Temperature elements	
	1.1 RTD's* of each type and length(with head assembly, terminal block & nipple)	10% or 2 nos. of each type and length, whichever is more
	1.2 Thermocouples of each type like K-type, R-type, metal etc. * (with head assembly, terminal block & nipple)	10% or 2 nos. of each type and length which ever is more
	1.3 Cold junction compensation boxes of each model (if applicable)	10% or 2 nos. whichever is more
	1.4 Thermostatic units for each model of CJC box (if applicable)	10% or 2 nos. whichever is more
	1.5 Temperature transmitters	10% of each type and length
1.01.03	1.1 Limit switches for isolation valves	2 nos. of each type
	1.2 Local Indicators like temperature gauges, pressure gauges, differential pressure gauges, flow gauges, flow meters etc.,	5% or 1 no. of each make, model and type whichever is more (to be divided to various ranges in proportion to main of all make, model, type population)
	1.3 Process Actuated Switch Devices Includes all types of Pressure, differential pressure, flow, temperature, differential temperature, level switch Devices	5% or 1 no. of each type and model whichever is more

1.01.04	CEMS (SOx, NOx, CO, CO2, Mercury, Stack opacity, flue gas flow):-	
(a)	Analyzer for SOx, NOx, CO2, CO.	1 no complete instrument of each type and model.
(b)	Flue gas flow measurement	1 no. complete instrument along with sender/receiver unit
(c)	Stack Opacity measurement	1 no. complete instrument along with sender/receiver unit
(d)	Electronic card assembly/ PCBs, moisture/condensate monitor, power supply modules	10% of each type, model and rating
(e)	Set of gaskets/O-rings/ seals	200% of each type, model, rating and size
(f)	Temp. Sensor	20% of each type and model
(g)	Heater assembly, Cooler assembly	20% of each type and model
(h)	Complete Probe with shield assembly (Not applicable for In situ- path)	1 no. of each type and model
(i)	Solenoids	2 nos. of each type, model and rating
(j)	Filters, light source, sensor, detector, etc.	200% of each type, model and rating
(k)	Calibration gases, Calibration cell and other consumables for calibration: - of all types and ranges.	One year supply
(l)	Heavy duty blower assembly	1 no. of each type, size and rating.
(m)	Rotameter/Air flow meter	2 nos. of each type, model and rating
1.02.00	Any other instrument (Flow transmitter, Density meter) (as applicable)	10 % or 1 no. of each type and model whichever is more
1.03.00	Analyzers (SO2, pH) for FGD system	10% or 2 Nos of each type complete with accessories
1.04.00	PROCESS CONNECTION PIPING (For Impulse Piping / Tubing and Air Supply Piping as Applicable)	

	1. Valves of all types and models	10% or 1 no. of each type, class, size and model whichever is more.
	2. 2 way, 3way, 5way valve manifolds	10% or 1 no. of each type, class, size and model whichever is more.
	3. Fittings	10% or 1 packet of each type, class, size and model whichever is more.
	4. Purge meters	5% of each model or 1 no. whichever is more.
	5. Filter regulators	20% of each model or 2 nos. whichever is more.
1.05.00	CABLES	
	1. Pre fabricated cable of each type.	10% of installed quantity
	2. Pre fabricated cable connector of each type	10% or 1 no. of each type and model, whichever is more.
	3. Other cables	5% of each type, pair and size of actual installed quantity
1.06.00	24V – DC POWER SUPPLY SYSTEM	
1.06.01	AC/DC isolators, contactors, timers, relays	10% of each type and rating.
1.06.02	Fuses of each type and rating	200%
1.06.03	Fuse free Circuit breakers	5% of each type and rating.
1.06.04	Electronic modules of all types	10% of each type.

1.06.05	Cooling Fans	2 nos. of each type
1.06.06	Relays of all types including overload relays	10% of each type and rating
1.07.00	**PLC CONTROL SYSTEM**	
1.07.01	Power Supply Unit	1 nos. of each type and model
1.07.02	Electronic modules(I/O modules, communication modules and any other module used in the system)	10% or 1 no. of each type and model, whichever is more.
1.07.03	Central Processor Unit	1 nos. of each type and model.
1.07.04	Interconnecting Cables	10% of each type and size
1.07.05	Cooling Fan in PLC system / cabinet	2 Nos.
1.07.06	Indication lamps of all types	100%
	1. Keyboards/mouse	
	1.1 Keyboard	2 nos. of each type.
	1.2 Mouse	2 nos. of each type.
	2. Printers and their parts	
	2.1 Color laser printer (A4)	1 no
	2.2 Long term storage unit	1 no
	2.3 Blank CDs	10 boxes
	3. HMIPIS Devices	
	3.1 OWS with licensed software loaded along with monitor	2 nos. of each type and model.
	3.2 Server for unit LAN or Information Work Stations (As applicable)	1 nos.

	3.3 Net work components like Switch /repeaters/hubs etc. (as applicable)	2 nos. of each type and model.
	3.4 Control units for LVS	1 no.
	4. Cables and Connectors.	
	4.1 Prefab interconnecting cables with connectors	2 nos. of each type and length.
	4.2 System bus cable with connectors	-do-
	4.3 I/O bus cable with connectors for remote I/O units	-do-
	4.4 Power Supply Modules & Power Packs for control system	10% of each type model and rating, whichever is more
	5. Electronic modules of each type and model for control system (This shall include all type of cards like I/O cards, controller cards, CPU module or Card, logic cards etc.)	10% or 2 nos. of each type and model whichever is more
	6. Bus coupler/Interface hardware and other communication devices.	10% of each type and model
	7. Relays	10% of each type and rating
	8. Batteries used for battery backup of RAMs.	10% of each type and model
	9. Fuses	200 %
1.08.00	**OTHER RELATED CONTROL AND INSTRUMENTATION SYSTEMS □ EQUIPMENTS**	
	1. Lime Feeders	
	1.1 Motion monitor	10% or 2 nos. whichever is more.

	1.2 Speed pick-up	10% or 2 nos. whichever is more.
	1.3 Torque switch (if applicable)	10% or 2 nos. whichever is more.
	1.4 Load Cell	10% or 2 nos. whichever is more.
	1.5 Electronic cards & Power Supply cards	10% or 2 nos. whichever is more.
	1.6 Clutch (if applicable)	10% or 2 nos. whichever is more.
	1.7 Local indication lamps	200 %
	1.8 Panel meters	10% or 2 nos. whichever is more.
	1.9 Limit switch assembly for lime-on-belt, no lime flow, shear pin failure, etc.	10% or 2 nos., whichever is more.
1.09.00	**CONTROL □AL□ES□ACTUATORS □ ACCESSORIES (F□□□□ □□□ □□□ □ □□□□□□□ □r□□d□d □□d□r □□□ □□□□□ □□r □□□ □ □d□□□□□ □□□r□□□□□□ □□□ □□□□□d □□d□r □□□ □□□□□□□)**	
	1. Pneumatic and electro-hydraulic actuator assembly	10% or 1 no. of each type, model and rating, whichever is more.
	2. Valve trim (including cage, plug, stem, seat rings, guide bushings etc.)	1 set for each type of control valve.
	3. Diaphragms, O' rings, seals etc. of all types make etc.	100%
	4. Pressure Gauges of all types, make, rating etc.	10% or 2 nos. of each type whichever is more
	5. Solenoid valves (if applicable)	10% or 2 nos. of each type whichever is more

	6. Positioner units (complete unit)& accessories (link assembly)	10% or 1 no. of each type whichever is more
	7. Pneumatic air-filter/Regulator of each type, make rating etc.	10% or 2 Nos., whichever is more
	8. Air lock relays	10% or 2 nos. of each type whichever is more
1.10.00	**PNEUMATICS ISOLATION / BLOCK □AL□ES, ACTUATORS & ACCESSORIES (F□r** all **ON□OFF** valves supplie **d** un **d**e**r** this package **)**	
	1. Pneumatic actuator assembly	10% or 1 no. of each type, model and rating, whichever is more.
	2. Diaphragms, O' rings, seals etc. of all types make etc.	100%
	3. Limit switches (complete unit)& accessories (link assembly)	10% or 2 Nos., whichever is more
	4. Pneumatic air-filter/Regulator of each type, make rating etc.	10% or 2 Nos., whichever is more

	□ELECTRICAL□		
A	**CON□EYORS**		
	1.	Conveyor Drive Motor	1 no. of each type and rating
	2.	Belt Sway Switches	10 Nos of each type
	3.	Pull cord switches	20 Nos of each type
	4.	Zero speed switches	5 Nos of each type
	5.	Sensor/ probe of Zero speed switches	5 Nos of each type
	6.	Chute Block switches	5 Nos of each type
	7.	Under belt switches	5 Nos of each type
	8	Micro/limit switch of pull cord switch, Belt Sway Switches, Chute Block switches	5 Nos of each type
	9	Motor terminal block with studs for all motors	1 set for each rating and type of motor
B.	LIME SAMPLER		
	1.	Motors	1 no. of each type
	2.	Set of various limit switches	2 nos. of each type
	3.	Zero speed switch	1 no. of each type
	4.	Solenoid valves with coils	2 Nos of each type and size
	5	Motor terminal block with studs for all motors	1 set for each rating and type of motor
C.	BELT WEIGHER		
	1	Set of cards	2 nos. of each type
	2	Load Cells	2 nos. of each type
	3	Speed sensor	2 nos. of each type
	4	Cables for load cells & speed sensor	2 sets
D.	**METAL DETECTOR**		

	1	Cards	1 set complete
	2	Relays	2 nos. of each type
	3	Coils of metal detector	2 sets
	4	Cables for search coils	1 set
E.	**CONTROL PANEL** **(M□□□□□□□ □□□□r□□□r□ □□□ □ □□□ □□□□□ □□□□□□□ □□□□□□ □ □□□□□r□M□□□□d□□□□□□□r□ □□□□□□□ d□□□ □□□□r□□□□□□ □□□□□□ □ □□□d □□□□□□□□□ □□□.)**		
	1	Control supply transformers	2 no. of each type & rating
	2	Ammeters	4 nos. of each type & rating
	3	Voltmeters	2 no. of each type & rating
	4	LEDs	5 nos. of each type & rating
	5	Control switches	2 nos. of each type
	6	Selector switches	2 nos. of each type
	7	Push button (complete with contact elements)	2 nos. of each type & colour
	8	Auxiliary contactors	2 complete sets
	9	Control fuse base with carrier complete set for panel	1 complete sets
	10	Bi-metallic overload relays	2 complete sets of the
		N□□□: Spares already covered under respective equipment spares shall not be duplicated under control panel spares.	
G.	**DC SUPPLY SYSTEM**		
	220 V battery charger		

	i)	Set of Cards and modules (Each type and rating: CPC Card, HV PFPSR card, Rectifier FFD card, DC under/over voltage relay card, ACOR card, DC output fuse FFD card, Each leakage card, etc.)	1 set
	ii)	Set of Auxiliary relays (Each type and rating: Auxiliary relays, 6 amp/110 V DC coil and 6 amp/240 V AC coil)	1 set
	iii)	Set of fuse links and glass fuses (Each type and rating: AC input fuse links, 315 Amp, Rectifier fuse link, GS1000/400 Amp, Filter condenser fuse link, 160 Amp, DC output HRC fuse link, 500 Amp, Control HRC fuses links, 2 & 4 Amp & Glass fuse, 100 mA)	3 set
	iv)	Set of SCR and Diode (One of each type and rating)	3 set
	v)	Rectifier transformer	1 no. of each type and rating
	vi)	Control transformers	1 no of each type and rating
H.	**DUST SUPPRESSION □ SER□ICE WATER SYSTEM**		
	1	Electric motor	1 no. of each type & rating
	2	Flow switches	2 nos. of each type
	3	Pressure switches	2 nos. of each type
	4	Level switch with its panel	2 nos. of each type
I.	VENTILATION SYSTEM		
	1	Electric motor	1 no. of each type & rating

LT S□ □□□□□□r:

P□r□A:

S.N□.	I□□□ D□□□r□□□□	Q□□□□□□
1	Complete breaker	10% of each type & rating
2	Ammeter	10% of each type, size & range
3	Voltmeter	10% of each type, size & range
4	Relays	10 Nos. of each type
5	Bus bar support insulators (Porcelain)	10 Nos.

P□r□B:

1	Spring charging motors	10% of each type & rating
2	Aux. Contact set	6 sets of each type & rating
3	Limit switches	10% of each type.
4	Arc chutes	10% of each type & rating
5	Fixed contact set	10% sets of each type & rating
6	Moving contact set	10% sets of each type & rating
7	Arcing contact	10% sets of each type
8	Charging spring	10% of each type & rating
9	Current transformer	10% of each type & ratio

10	Closing coil	10% of each type & rating
11	Trip coil	10% of each type & rating
12	CT for Bimetal O/L relays	10% of each type & rating
13	Voltage transformer	10% of each type & ratio
14	Control supply transformer	10% of each type and rating
15	(a) Power contactor	10% of each type & rating
16	(b) Coil of above contactor	10% of each type & rating
17	Air break switches	10% of each type & rating
18	DP air break switches(DC)	10% of each type & rating
19	Control & selector switches	10% of each type & rating
20	Control fuses & neutral links	Total 10% (Fuses) & 5% (Neutral links), to cover all the ratings.
21	Indicating lamps	Total 20% to cover all the types & ratings
22	Vertical bus bar dropper support insulators (FRP)	25 Nos.
23	Bus duct flexible connectors	1 set for thee phases of each type & size
24	(a) Primary disconnect in MCC (Bus bar end)(Male/female contact)	Total 15 Nos. proportionately divide for all ratings
25	(b) Secondary disconnect in MCC (Cable end)	Total 15 Nos. proportionately divide for all ratings

26	Push buttons	20% of each type
27	Power fuses	Total 20% proportionately divide for all ratings
28	Thermal Bimetal relays	Total 5%. proportionately divide for all ratings
29	Current transducers	10% proportionately divide for all ratings
30	Voltage transducers	10% proportionately divide for all ratings.
31	Indication lamp holders complete	10% of each type & rating
32	Busbar aluminium flat pieces	12 meters of each type & rating
33	Busbar angles/formed pieces for breaker	2 Nos. of each type
34	Terminal blocks	10% of each type & rating
ELECTRICAL ACTUATORS		
1	Actuators	1 no of each type and rating
LIGHTING		
1	Lamps	12 nos of each type and rating
2	Front glass	12 nos of each type and rating
3	Lamp holders	12 nos of each type and rating

NOTE:

1. Wherever set is mentioned, one set of the spares of that item shall be for complete replacement of that particular item for one equipment.

2. Any fraction of a item shall mean the next higher integer.

□. Wherever quantity has been specified as percentage (%), the quantity of mandatory spares to be provided by contractor shall be the specified percentage (%) of the total population of the plant. In case, the quantity so calculated happens to be fraction, the same shall be rounded off to next higher whole number.

4. Wherever the quantities have been indicated for each type, size, thickness, material, radius, range, etc., these shall cover all the items supplied and installed and the breakup for these shall be furnished in the bid.

□. In case, spares indicated in the list are not applicable to the particular design offered by the bidder, the bidder should offer spares applicable to offered design with quantities generally in line with the approach followed in the above list.

□.00.00 MANDATORY SPARES FOR CHIMNEY ELE□ATOR
(Q□. □d□□□□d □r□ □□r □□□ (1) N□. C□□□ □□□ E□□□□□r)

A.	BRAKE		ASSEMBLY Qty.
	1.	Brake Assembly complete	1 No.
B.	GEAR ASSEMBLY		
	2.	Gear Assembly complete	1 No.
C.	DOOR FRONT		
	3.	Bearing	3 Nos.
	4.	Roller	3 Nos.
	5.	Bushing (if applicable)	2 Nos.
D.	LIMIT CAMS		
	6.	Sensor	3 Nos.
	7.	Switch arm	3 Nos.
E.	CAB		
	8.	Guide roller	100% of the total ones installed each type or min. 1 no. whichever is higher
	9.	Switch	3 Nos.
F.	SLIDING DOOR		
	10.	Rollers (if applicable)	4 Nos. each type
G.	MACHINERY		
	11.	Guide roller	2 Nos.
	12.	Pinion	2 Nos.

	13.	Rubber inserts (if applicable)	12 Nos.
	14.	Groove ring (if applicable)	6 Nos.
	15.	Brake motor	1 No.
H.	CABLE TROLLEY BEARING (if applicable)		
	16.	Bearing	3 Nos. of each type
I.	ELECTRICAL EQUIPMENTS		
	17.	Contactors	1 No. of each type
	18.	Auxiliary transformer	1 No.
	19.	Relays	1 No. of each type & rating
	20.	Switch	2 Nos. each type
	21.	Rectifier	3 Nos.
	22.	Limit switch	3 Nos. each type
	23.	Transmitter (if applicable)	1 No. if applicable
	24.	Receiver (if applicable)	1 No. if applicable
	25.	Battery charger	1 No.
	26.	Push Buttons	3 Nos. of each type
	27.	Timers	2 Nos. of each type & rating
	28.	Main drive motor with control system	1 Set

SUB-SECTION-IV-D

CIVIL WORKS

CLAUSE NO.	TECHNICAL REQUIREMENTS
1.00.00	**GENERAL**
1.01.00	This section of the bidding document deals mainly with the technical specification for the design and preparation of detailed drawings, getting the design and drawings approved by the Employer, fabrication, erection and construction of the necessary civil, structural and architectural works associated with the FGD package for **N□r□□ K□r□□□□r□ STPP (□□□□0 MW)**. The work shall have to be carried out both below and above ground level and shall be involving, basements, equipment foundations, grounding, slabs, beams, columns, footings, rafts, walls, steel frames, brick walls, stairs, trenches, pits, access roads, culverts, trestles, silos, sumps, Limestone storage hopper & shed, Crusher House, Transfer points, Conveyor Galleries, Tunnels, Gypsum storage shed, Chimney, Gypsum dewatering building, Ball Mill building, FGD control room building, Tank Foundations, absorber tower foundation, transformer foundation, MCC Building, finishes, complete architectural aspects, drainage, sanitation, water supply (from terminal points to various buildings/facilities) and all other civil, structural and architectural works associated with the complete FGD package.
1.02.00	The specifications are intended for the general description of the work, quality and workmanship. The specifications are not, however, intended to cover minutest details and the work shall be executed according to the relevant latest Indian Standard Codes / I. R. S. / I. R. C. specifications. In absence of the above, the work shall be executed according to the best prevailing local Public Works Department practices or to the recommendations of relevant American and British Standards or to the instructions of the Engineer. Some of the relevent I. S. Codes to be followed is mentioned in the Technical Specifications. The Contractor is expected to get clarified on any doubts about the specifications, etc. before bidding, in writing with the Employer in respect of interpretation of any portions of this document.
1.0□.00	Bidder or his agencies engaged as detailer for fabrication drawings should have the experience of detailing for power plant structures or steel plant or Industrial structures like Petro/ Chemical/ Refinery/ Cement/FGD Plant/Coal Handling Plant/Ash Handling Plant etc. The designer responsible for preparation of scope drawings shall review and approve the fabrication drawings prepared by the detailer before releasing them for fabrication.
2.00.00	**S□□ QR □□r C□□□□W□r□□:**
2.01.00	Bidder or its agency should have in past executed civil and structural works for 500 MW or higher capacity coal based/Lignite based power plant including earthwork in filling involving mechanical compaction and cutting in hard rock, foundations, Bulk material handling plant involving underground storage hopper and underground tunnels.
2.02.00	Bidder can engage more than one agency, in case the Bidder itself is not able to meet the requirement at 2.01.00. The agency being engaged for a particular work should have in the past executed such works of 500 MW or higher capacity plant.

CLAUSE NO.	TECHNICAL REQUIREMENTS
2.03.00	For Chimney, Bidder or its agency should have in the past built at least one (1) reinforced concrete chimney of minimum 100m height.
2.04.00	In case Bidder or its agency do not meet the requirements at 2.01.00 and the Bidder proposes to engage agency (ies) for civil & structural works on work volume basis (except for Chimney), Bidder or its agency (ies) should have executed such works in the past and the annual rate of execution in the reference works should not be less than eighty percent (80%) of the asking rate of such works, (structural steel fabrication & erection, RCC, earthwork in filling involving mechanical compaction and cutting in hard rock, RCC in underground storage hopper and underground tunnels) for which it is being engaged. Successful Bidder shall finalize the agency (ies) for each work in consultation with Engineer-in-charge at site before engaging them. **D□□□□□ □□□□□□ □□r C□□□□□ S□□□S□r□□□□r□□W□r□□:**
2.05.00	Bidder or its agency (ies) should have carried out the design and detailed engineering of following works: (i) Civil & Structural works associated with at least one bulk material handling plant for 500 MW or higher capacity coal based/Lignite based power plant. (ii) For Chimney, Bidder or its design agency (ies) should have carried out design & detailed engineering of at least one reinforced concrete chimney with steel flues, of minimum 100m height. (iii) Machine foundations such as Mill foundations/ Block foundations.
2.06.00	Bidder can engage more than one agency (of repute), in case the Bidder itself is not able to meet the requirement at 2.05.00. The design agency (ies) proposed by the Bidder shall be subject to Employer's approval.
□.00.00	**W□r□ D□□□r□□□□□**
□.01.00	**Tr□□□ H□□□□r□L□ □□□□□□ S□□r□□□ □□□□□r □□d U□d□r□r□□□d T□□□□□**
	Truck Hopper shall consist of underground portion, which shall be of R. C. C. with structural steel shed covered with permanently Colour coated profiled steel sheets. Limestone storage hopper shall be of RCC with structural steel shed covered with permanently Colour coated profiled steel sheets. The structural arrangement to be adopted for the design and construction of Limestone Storage hopper shall essentially consist of R. C. C. frames spaced at approx. 3.0M centers with R. C. C. wall panels on the sides and R. C. C. raft at the bottom, fixed to the frames. Minimum thickness of R. C. C. raft at bottom shall be 600

mm. Minimum thickness of RCC side walls shall be 600 mm at bottom and 300 mm at top.

The vertical and inclined portion of hopper shall be provided with 50 mm thick guniting (shotcreting). Details of shotcreting have been given elsewhere in this specification.

Expansion joints shall be provided at a maximum distance of 40m. 600 mm wide water stop fabricated with 22G copper plate with bitumen board fillers and polysulphide sealing compound as specified elsewhere shall be used as expansion joint material.

Floor shall be provided with cross slope not flatter than 1 in 50 towards side drains. Side drains shall be sloped towards sump where sump pumps as specified elsewhere, shall be provided. The slope of side drains shall not be flatter than 1 in 400. Side drains and sump shall have removable type steel grating cover.

Water proofing / Damp proofing of under ground Truck hopper, Limestone Storage hopper, tunnels and underground (i. e. basement) portion of transfer houses shall be done by providing the following treatments:

Chemical injection grouting for inner faces (details as specified elsewhere).

Polymer modified cementitious coating on earth side face as per the following :

(1) On the outer surface of walls, frames and roof slabs coming in contact with earth, polymer modified cementitious coating in two layers as specified and as per manufacturer's specifications shall be provided directly on the concrete surface.

(2) 50 mm thick P. C. C. (1 : 2 : 4 with 10 mm nominal size stone aggregates) shall be provided under the raft i.e. over the lean concrete, followed by polymer modified cementitious coating in two layers (slurry mix application) as per manufacturer's specification. 50 mm thick P. C. C. (1 : 2 : 4) with 10 mm nominal size stone aggregates shall then be laid over the polymer modified cementitious coating before laying the raft.

Truck hopper and its gratings shall be designed for movement of front end loader/ bulldozer over them. Bull dozer weight shall be considered as about 35T. The gratings shall be built of min. 200x28mm thick flats in main direction and min.100mm x 20mm thick in secondary direction. No painting/galvanization shall be provided in gratings. However, two coats of Red oxide Primer to be provided immediately after fabrication.

Plinth protection along with drains shall be provided along the Hopper complex. However, 5m wide paving shall also be provided around machinery hatches.

Earth pressure to be considered for design shall be due to earth pressure at rest (Ko) condition only. Earth pressure due to surcharge intensity of Uniformly Distributed Load (U. D. L) of intensity 2 T / Sq. M. shall be considered in the design.

A minimum safety factor of 1.2 against uplift due to ground water shall be ensured during execution and after execution, considering dead weight of the structure to be

0.9 times only, ground water table to be taken at adjoining formation level and soil wedge angle of not more than 15 degrees.

Also, FOS against uplift, to be taken as 1.0, considering the dead wt. of structure and soil resting on side projections if any in the vertical plane. Inclined wedge action of soil shall not be considered in this case.

Wherever, slope of tunnel exceeds 10°, R. C. C. steps shall be provided for the entire width of each walkway.

□.02.00 O□□r□□□d □Gr□□□d C□□□□□□r G□□□r□□□ □□d Tr□□□□□□

Overhead conveyors shall be located in a suitably enclosed gallery of structural steel. The overhead gallery shall consist of two vertical latticed girders having rigid jointed portal frame at both ends. Cross beams at floor level supporting conveyor stringer beams shall be made of single rolled steel beam or single channel section (ISMB or ISMC) or plate girder. Horizontal bracings are to be provided at top & bottom plan of the gallery (latticed girders shall be braced together in plan at the top and bottom). Common end portal frame shall not be used for adjacent conveyor spans. Roof truss shall be provided at upper node points of latticed girders to form an enclosure. Contractor can also use tubular steel sections for roof truss only of conveyor galleries. The tubular steel section shall be of circular/rectangular/square shape. The circular steel tube shall conform to IS 1161 and rectangular/square steel sections shall conform to IS 4923. The steel structures using tubular sections shall be designed and fabricated as per IS 806 – "Code of Practice for use of steel tubes in general building construction." and EN 1993-1-8:2005. The maximum span of overhead gallery shall be limited to 25 meters unless higher span is required due to site conditions, which shall be subject to approval of the Engineer. The gallery should as far as possible be erected as a box section keeping all the vertical and horizontal bracing tied in proper position. The gallery should be checked for all erection stresses that are likely to develop during handling and erection and if required, temporary strengthening of gallery members during erection shall be made.

Seal plates under the conveyor galleries shall be provided in such a way that complete gallery bottom shall form a leak proof floor.

The ground conveyors shall be located in suitably enclosed gallery of structural steel consisting of rigid portal frames spaced at regular intervals and suitably braced. Plinth protection along with drains shall be routed along the ground conveyors.

For double stream conveyor gallery, two side and one central walkway of width 800 mm and 1100 mm respectively shall be provided. The width of two side walkways for single stream conveyor gallery shall be 800 mm and 1100 mm respectively. Both sides of central and side walkways shall be provided with pipe handrails all along the conveyor gallery. Hand railing should not be supported on conveyor supporting stringers. The walkways shall be chequered plate construction with anti - skid arrangement. The anti - skid arrangement will consist of welding of 10 mm square steel bars at a maximum spacing of 500 mm along the length of the gallery. Where the slope of walkway is more than 10°, chequered plate steps with nosing and toe guard shall be provided. The floor of conveyor gallery all along the gallery length, shall be provided with minimum 12 gauge thick seal plates and other drainage arrangements as specified elsewhere

CLAUSE NO.	TECHNICAL REQUIREMENTS

Conveyor gallery shall have permanently colour coated steel sheet covers on roof and both sides. However in roof, a panel of minimum 1.5 m x 1.5 m area at about 6.0 m center shall be provided with translucent sheets of polycarbonate material for natural lighting. A continuous slit opening of 500 mm shall be provided on both sides just below the roof sheeting. Adequate provision of windows shall be kept on both sides of conveyor gallery as appended in Mechanical Section (Belt conveyor system). Windows shall be provided with wire mesh as specified elsewhere in this specification.

Cross - over with chequered plate platform and ladder for crossing over the conveyors shall be provided at approximately every 100 M intervals of conveyor. Crossover shall preferably be located over four-legged rigid trestle location.

For railway tracks passing below overhead conveyor gallery and along conveyors, the railway clearances both underground as well as over ground shall have to be adhered to for design, execution and erection of foundations, trestles, galleries etc., so that movement of locomotives and wagons is not hampered in any way during execution and afterwards. However at the location where the overhead conveyor gallery crosses road / rail line, minimum clearance of 8.0m above the road crest / rail top shall be provided.

For calculation of material load on moving conveyor, a multiplication factor 1.6 shall be used to take care of inertia force, casual over burden and impact factor etc.

Thus material load per unit length of each moving conveyor shall be

$$1.6 \times \frac{\text{Rated capacity of conveyor system}}{\text{Conveyor Belt Speed}} \times F$$

Where, F = 1700/1400 for lime & 1250/900 for gypsum

It should be noted that for structural design, unit weight of lime shall be assumed as 1700 Kgs. / Cu. M. instead of 1400 Kgs. / Cu. M., unit weight of gypsum shall be assumed as 1250 Kgs. / Cu. M. instead of 900 Kgs. / Cu. M. considered for system sizing purpose. Conveyor Gallery structure shall be designed considering both conveyors operating simultaneously.

Conveyor gallery and supporting trestles located between transfer houses / buildings shall be arranged in any one of the following ways.

a) All gallery supporting trestles shall be four legged type only. One end of each gallery span shall be hinged to the supporting trestle and the other end shall

CLAUSE NO.	TECHNICAL REQUIREMENTS

be slide type. Slide type support shall be with P. T. F. E. bearings to allow both rotation & longitudinal movements.

b) In between transfer houses / buildings, four legged trestles shall be placed at a maximum interval of 90 metres. The arrangement shall be such so as to ensure that force in the longitudinal direction (i. e. along the conveyor length) of conveyor gallery of length not more than 90 m is transferred to any four legged trestle. In the space between each successive four legged trestles, two legged trestles shall be provided at regular intervals. The end supports resting on the four-legged trestle can have either ends hinged or one hinge and the other on slide type depending on the arrangements. Slide type support shall be with P. T. F. E. bearings to allow both rotation & longitudinal movements.

End of conveyor gallery which will be supported over transfer house, shall be so detailed that only vertical reaction is transferred from conveyor gallery and no horizontal force in longitudinal direction is transferred from conveyor gallery to transfer house structure and vice - versa.

For trestles and trestle foundations for conveyor galleries located adjacent to existing structures, over ground and under ground facilities, location and details of these trestles and foundations shall have to be decided such that there is no interference both underground as well as over ground with existing structures and facilities. Trestle columns / ground conveyor portal column base shall be kept 300 mm higher than the existing ground level.

□.0□.00 Tr□□□□r H□□□□□

The over ground portion of the transfer house shall be framed structure of structural steel work with permanently colour coated profiled steel sheet side cladding (from lowest working floor level till top) and R. C. C. floors comprising of RCC slab over profiled metal deck sheets (to be used as permanent shuttering) over structural beams. Shear anchor studs shall be provided through metal deck at regular interval on all top flange/flange plate of structural beams. However, the lower portion of side cladding, at ground, for a minimum height of 0.9 m above the finished floor level shall be one brick thick wall plastered on both side. In some areas like MCC floors etc., one brick thick wall cladding shall be provided. Brick wall cladding shall be supported on encased wall beams and suitably anchored to adjoining columns and beams. Contractor shall have option to use tubular steel sections for roof truss only. Vertical bracings shall be provided only on four sides along the periphery. Grade slab with 0.9m height one brick thick wall plastered on both side at periphery shall be provided for all transfer houses.

Adequate steel doors and windows for proper natural lighting and ventilation shall be provided. In addition to steel windows, panels of suitable size to suit the architectural treatment and made of translucent sheets of polycarbonate material shall also be provided on the side cladding for natural lighting.

The roof of Transfer points shall be provided with pre-fabricated insulated metal sandwich panels. Composition of Insulated Metal Sandwich Panels shall be as described elsewhere in the Technical Specification. Adequate slope shall be provided for quick drainage of rain water.

CLAUSE NO.	TECHNICAL REQUIREMENTS
□.04.00	**Cr□□□□r H□□□□** The crusher house shall be framed structure of structural steel work with permanently colour coated profiled steel sheet side cladding. However, panels of suitable size to suit the architectural treatment and made of translucent sheets of polycarbonate material shall also be provided on the side cladding for natural lighting. The lower portion of side cladding, at ground, for a height of minimum 0.9m above the finished floor level shall be of one brick thick wall plastered on both faces. Floors shall be of R. C. C. slab over profiled metal deck sheets (to be used as permanent shuttering) over structural beams. Shear anchor studs shall be provided through metal deck at regular interval on all top flange/flange plate of structural beams. Within this building cubicles are to be provided for resting room of operators and these shall be constructed with one brick thick brickwork having both sides plastered and roof slab. Adequate steel doors and windows for natural lighting and ventilation shall be provided. Contractor shall have option to use tubular steel sections for roof truss only . Vertical bracings shall be provided only on four sides along the periphery. The roof of Crusher house shall be provided with pre-fabricated insulated metal sandwich panels. Composition of Insulated Metal Sandwich Panels shall be as described elsewhere in the Technical Specification. Adequate slope shall be provided for quick drainage of rain water. Crushers shall be supported on R. C. C. deck, which in turn will rest on suitable vibration isolation system consisting of springs and dampers. This R. C. C. deck shall be isolated from the floor. However, the vibration isolation system consisting of springs and dampers may rest on main building framework. Detailed specification of vibration isolation system including the unbalanced force, frequency and amplitude criteria and other design requirements are appended elsewhere in this specification
□.0□.00	**C□□□r□□□□□d□□□□M. C. C. B□□d□□□□** These shall be steel or RCC framed building with R. C. C. roof and floor. For steel framed building roof /floor shall comprise of RCC slab over profiled metal deck sheets (to be used as permanent shuttering only) over structural beams. Cladding shall be of brickwork/concrete blockwork with plastering on both sides. Roof shall be provided with roof water proofing treatment, as specified elsewhere in the Technical specification. Suitable arrangement shall be provided so as to prevent ingress of water into the cable trenches inside the building from cable entry locations. All air - conditioned areas, shall be provided with the suspended permanently colour coated aluminium false ceiling system (details specified elsewhere) with under deck insulation. Adequate aluminium doors and windows shall be provided for natural lighting, ventilation and view. All windows in air conditioned rooms shall have hermetically sealed double glazing.
□.0□.00	**P□□□H□□□□** These shall be of R. C. C. framed structures with columns, beams, slabs and foundations etc. Cladding shall be of brickwork with plastering on both sides. Roof

shall be provided with roof water proofing treatment as specified elsewhere. Adequate nos. of steel doors and windows shall be provided for natural lighting and ventilation.

□.0□.00 G□□□□□ S□□r□□□ S□□d

The Gypsum storage shed shall be RCC framed structure with structural steel work shed with permanently colour coated profiled steel sheet roof and side cladding, grade slab and RCC foundations etc. Roof shall be provided with troughed profile permanently colour coated sheet with adequate slope for quick drainage of rain water.

□.0□.00 T□□□□□□

Toilet with potable water line facilities shall be provided in each of the following locations:

(a.) In all M. C. C. Rooms

(b.) Control Building

□.0□.00 S□□r□□□□□□Gr□□□□□□□H□□dr□□□

All floors of transfer points/crusher houses and other facility buildings shall be accessible through staircase. All staircases of Transfer points and crusher house shall be of steel. Cage ladders (min. 450mm wide) shall be provided for access to roof of penthouses, single storey mcc rooms & mumty. All Stairs shall be minimum 1200 mm wide, maximum rise should not be more than 180 mm and minimum tread with 250 mm. Numbers and arrangement (including enclosures etc.) of stair cases shall be such as to meet the fire safety requirement as per guide lines of statutory regulatory bodies. For steel staircases , Stringers shall be of rolled steel channel (minimum ISMC 250) and tread shall be of steel gratings. Out side stairs to transfer points/crusher house shall be open type. Minimum 50 x 50 x 6 mm size angles with lugs shall be provided as edge protection for treads of stairs in underground TP's

All gratings shall be electro forged types. Minimum thickness of the grating shall be 40 mm for indoor installation and 32 mm for outdoor installation. However, at entry or road crossing point's minimum thickness of grating shall be 40 mm The opening size shall not be more than 30mmx100mm. The minimum thickness of the main bearing bar shall be 6 mm or as per design requirement whichever is higher. All gratings shall be designed for minimum imposed load of 500Kgs. / Sq. M. If actual expected load is more than the specified load, then actual load is to be considered. All gratings shall be hot dip galvanized at the rate of 610 g. per sq.m. after surface preparation by means of blast cleaning/ acid pickling.

Minimum 1000 mm high hand railing shall be provided around all openings, projections / balconies, walkways, platforms, Stairs, etc. All handrails and ladder Pipes shall be 32 mm nominal bore MS Pipes (medium class) as per IS:1161. Handrails shall have top and middle rails at a height of 1000 mm and 500 mm and the vertical post spacing shall not exceed 1.50 M, with provision of kick Plates (100 mm high and 6 mm thick). All handrails and ladders shall be galvanised at the rate of 610 Gms / Sq. M as per IS:4736.

CLAUSE NO.	TECHNICAL REQUIREMENTS
□.10.00	**Tr□□□□□□** All trenches for cables or any other underground facility as detailed out elsewhere shall be of R. C. C. Cable trenches shall be provided with pre - cast R. C. C. covers / chequered plate cover. Cable trenches as well as pre - cast covers shall be provided with edge protection angles and lifting hooks. All embedments / block outs as required and specified elsewhere in these specifications shall be provided. Proper drainage arrangement shall be provided. Trench pre - cast cover weight shall not be more than 65 Kgs. Trench covers near entry or at road crossings shall be designed for 10 T wheel load at centre. Pre - cast covers shall be designed for central point load of 75 Kgs. R. C. C. cable trenches shall be filled with sand after erection of cables, up to top level and covered with pre - cast R. C. C. covers. For cable trenches outside buildings, top level shall be 200 mm above G. L and sand filling shall be overlaid with 50 thk. PCC. Minimum 50 x 50 x 6 mm size angles with lugs shall be provided as edge protection all around cut outs / openings in floor slabs, edges of drains supporting grating/precast RCC covers□edges of R. C. C. trenches supporting pre - cast covers, supported edges of pre - cast cover
□.11.00	**C□□□□ □□□□r□□r□□□□□**
	Cable galleries/trestles shall be made of structural steel. The contractor can use either rolled sections or tubular steel sections. The tubular steel section shall be of circular/rectangular/square shape. The circular steel tube shall conform to IS:1161 and rectangular/square steel sections shall confirm to IS:4923. The steel structures using tubular sections shall be designed and fabricated as per IS:806 – "Code of Practice for use of steel tubes in general building construction." and **EN 1□□□-1-□:200□**.
□.12.00	**Tr□□□□□r□ □r F□□□d□□□□**
□.12.01	Foundations of transformers shall be designed for seismic and wind loads in addition to other applicable loads. Block foundations shall be provided for the main transformer block. The oil soak pit, if provided, shall be filled with gravel of size 40mm. The volume of the soak pit shall be sufficient to store complete oil of the transformer/reactor along with 10 minutes of fire water considering only 40% of the volume as available voids between gravel filling. However, in case a separate oil collection tank is provided for the transformer/reactor, oil soak pit of volume equivalent to one-third (1/3) the oil volume of transformer/reactor shall be provided around transformer/reactor. The oil collection tank, in such cases, shall be designed for an effective capacity of complete oil of the transformer along with 10 minutes of fire water. The oil soak pit shall also be provided with a sump at the corner to allow drainage of water/oil from the soak pit. Arrangement for moving the transformer into place using rail cum road, jacking pads and pulling blocks including inserts, as required, shall be provided along with the transformer/ reactor foundations.

CLAUSE NO.	TECHNICAL REQUIREMENTS
	RCC Firewall shall also be provided between the transformers wherever required. 300 mm thick PCC M20 encasement all around the Pylon supports inside soak pit for fire fighting system shall be provided up to top of gravel filling. Coarse aggregate filling inside the transformer oil soak pit shall be carried out only after construction/erection of Pylon supports and PCC encasement.
□.12.02	**F□□□□□□**
	Fencing with toe wall and steel gates shall be provided around the transformers. Fencing shall comprise of PVC coated GI chain link fencing of minimum 8G (including PVC coating) of mesh size 75 mm and of height 2.4 m above the toe wall. The diameter of the steel wire for chain link fence (excluding PVC coating) shall not be less than 12G. Fence posts shall be of pre – cast R. C. C. of minimum M20 grade. All corner posts will have two stay posts and every tenth post will have transverse stay post. Suitable R. C. C. foundation for the post and stays shall be provided based on prevailing soil conditions. Gates shall be sturdy with locking provisions. Toe walls of brick masonry shall be provided between fence posts all along the run of the fence with suitable foundation. Toe wall shall be minimum 200 mm above the formation level with 50 mm thick P. C. C. coping (1: 1. 5: 3) and shall extend minimum 300 mm below the formation level. Toe wall shall be plastered on both sides and painted with two coats of cement paint of approved colour and shade. Toe wall shall be provided with weep holes at suitable spacing
□.1□.00	**B□□□□□r F□□ F□□□d□□□□**
	Booster Fan foundations shall be RCC block foundation directly resting on virgin soil/ pile below Ground level. The vertical faces of this block foundation shall be isolated from adjacent footings by providing minimum 100mm thick polystyrene board of type-1 conforming to IS: 4671 with density 20 Kg/cum sandwiched between the vertical face of block foundation and 230 thick brick wall all round.
□.14.00	**CHIMNEY**
□.14.01	**S□□□□□F□□□□r□□**
	Single-flue or multi-flue chimney(s) shall be provided. Chimney shall be of reinforced concrete construction. There shall be one flue (liner) for each unit. The flue gas emission point shall be minimum 150 meters above the plant grade level. The chimney shell (windshield) shall be constructed using slip form shuttering. Internal platforms of steel structure shall be provided for enabling access to various elevations of the chimney and to provide support to the flue liners. Spacing of internal platforms shall not exceed 45.0 M. The platform beams shall be supported on concrete shell using suitable load bearing arrangement in the recesses provided for the purpose. The platform beams getting supported in the chimney shell shall have complete bearing support within the thickness of shell at that location and shall in no case be supported completely/partially on corbels/ brackets from the shell. "Through openings" in shell if provided to facilitate erection of platform beams shall be closed with cast-in-situ RCC closure wall on the external face of the shell. Necessary dowel bars shall be provided in the shell during construction for this purpose. Openings in the concrete shell for flue duct entry, access door & truck entry door at ground level,

air ventilation etc shall be provided. Hand railing shall be provided all around internal staircase & around the ventilation voids in the internal platform using min. 32 mm nominal bore MS pipes of medium class conforming to IS:1161. Spacing of railing posts shall not be more than 1500 mm centre to centre with a minimum height of 1200 mm. The handrail shall have three rows of horizontal members between the railing posts including the top member. Kick plate of min. size 100x6 thick shall be provided in the hand railing.

The flue duct outside the chimney shall be suitably connected to the flue liner inside the chimney through a transition duct. The transition duct shall be bottom supported and shall be profiled into a circular shape to connect to the flue liner. The flue duct shall be so designed that no load is transferred on the chimney shell due to the duct. The interface between the flue liner and the transition ducting shall be provided with non-metallic fluroelastomeric fabric expansion joint.

The expansion joint in the flue liner shall comprise of non-metallic fluoroelastomeric material suitable to withstand a temperature of 300 Deg C, shall be acid resistant to withstand acidic flue gas condensates arising out of flue gas parameters & operating conditions as specified elsewhere in the specification and shall also prevent dust accumulation. The space between the expansion joint material and the liner shall be packed and sealed by providing a bolster made up of light weight compressible material suitable to withstand a temperature of 300 Deg C and acid resistant to withstand acidic flue gas condensates arising out of flue gas parameters & operating conditions as specified elsewhere in the specification. The bolster shall be confined in texturized glass fabric having a final covering of stainless steel wire mesh.

Chimney roof shall be of RCC slab over a grid of structural steel beams and provided with rainwater drainage system. An internal structural steel staircase supported from chimney shell with chequered plate floor panels and pipe handrails, shall be provided for full height of the chimney and an internal cage ladder for a small height, over last staircase landing to access the chimney roof through a roof access hatch.

The other components of the chimney include liner test ports (for continuous pollution monitoring), liner hatches, grade level slab of RCC with metallic hardener floor finish, acid resistant treatment on roof slab, a large electrically operated grill type roll-up door and personnel access metallic door at grade level, roof drain basin, rain water down comer pipe (150 mm diameter galvanized pipe), connection to plant drains, louvers with bird screens for ventilation and all other openings in the wind shield, mild steel wind strakes (if required), all finishing works, electrical power distribution boards, lighting panels, power & control cabling and wiring systems, stair and platforms lighting, socket outlet, lightning protection and grounding system, aviation obstruction lighting with photoelectric controller etc, communication system, a rack and pinion elevator and other items, though not specifically mentioned but reasonably implied and necessary to complete the job in all respects.

Aviation Warning Lights (AWL) shall be mounted on door panel of required size (open able from interior of chimney shell) fixed to openings in the chimney shell at locations and levels specified elsewhere. Suitable provision for approach to the AWL shall be provided at the platform level. AWL shall be located at about 1-1.5 metre above the top of platform to enable easy handling for maintenance.

The size of roll-up door shall be determined based on minimum requirement for ventilation and transportation & erection of flue segments.

CLAUSE NO.	TECHNICAL REQUIREMENTS
□.14.02	**D□□□□□ C□□□□□□**
	Design and construction of various components and systems of the chimney shall be in accordance with relevant Indian Standard and where provisions are not covered in Indian Standard, reference shall be made to ACI, BS, CICIND and other international standards. In case of any conflict between this document and the Indian and International Standards, the stipulations of this document shall prevail. Imposed loading for design of all chimney components shall not be less than 5 kN/ Sq.m. An additional 25% of liner load shall be taken as impact loading for liner erection in addition to the liner load. The min. thickness of web for plate girders shall be kept as 12 mm. Seismic forces on the chimney system shall be determined based on site specific seismic information provided elsewhere in this document. Wind forces on the chimney system shall be determined based on site specific wind design criteria provided elsewhere in this document. The chimney and its components shall be designed to resist the most onerous forces resulting from all the possible combinations of the various loadings. Design of all chimney components shall be based on working stress method.
□.14.0□	**W□□d S□□□d**
	The wind shield shall be designed for vertical loading, cross wind loading, seismic loading, circumferential wind loading, thermal gradients etc. The load calculation and load combinations shall be as detailed in IS 4998 (Part 1) : 1992. The wind shield shall be analysed for cases with and without flue liner loads. Forces/stresses in the wind shield due to eccentricity effects of local (e.g. corbel) loadings, insolations effects, rotation of chimney foundations, construction tolerances and moments of second order shall also be considered. Seismic response of the chimney shall be computed by the response spectrum method. At least, the first five modes of vibrations shall be used for this analysis. The cross wind analysis of the chimney shall be carried out irrespective of the value of the Scruton Number for the chimney and other empirical considerations which suggest structural immunity to cross wind oscillations. The effect of the openings/cut-outs in the chimney shell shall be duly considered in the design of the windshield. The minimum thickness of shell shall not be less than 500mm. The stresses for the shell design shall not exceed the limits given in Cl. 7.0 of IS:4998 (PART-I) 1975 for various combinations of loads, excepting the stress in concrete for the case of dead load + wind load which shall not exceed 0.30fck where fck is the characteristic compressive strength of concrete. The minimum vertical reinforcement shall be 0.3% of the concrete area. The maximum spacing of the reinforcement bars shall not be more than 250 mm on each face. The minimum circumferential reinforcement shall be 0.2% of the concrete area. The maximum spacing of the reinforcement bars shall not be more than 200 mm on each face. The circumferential reinforcement in the top 3 meters of the windshield

CLAUSE NO.	TECHNICAL REQUIREMENTS
	shall be twice that required from design forces. The clear cover to reinforcement shall be 50 mm. There shall be a continuous ring of concrete shell without any opening for a height of atleast 5m below the soffit of flue duct openings. There shall not be any reverse (outward) slope in the inside face of chimney shell. Where there is a sudden change in slope/ profile of the shell, the circumferential reinforcement shall be increased to twice the requirement as per the design in a circumferential band extending atleast 3m above and below such slope/profile change level. The diameter of the reinforcing bar for the main vertical reinforcement of shell shall not be less than 25mm for a shell height upto the top level of flue duct opening. Shell thickness between any two 10m reference levels shall not vary more than 150mm. The minimum thickness of shell/closure wall at beam support recess/ opening locations shall be 100mm. Grade of concrete for chimney shell, and other super structure shall be minimum M 30. Only OPC cement shall be used for Chimney shell and other super structure. The final design shall be checked & verified by 'Wind Tunnel Test' and shall be conducted at a reputed institution. Dynamic interference effects due to additional chimney(s)/NDCTS's and other tall structures located in the area or in the future expansion stage of the project shall be determined along with the other topographical features of the local area through model test.
□.14.04	**F□□□ L□□□r□** The flue gas parameters & various operating conditions for selection of flue liner material, material specification for flue liner and the criteria of flue gas exit velocity for sizing the flue liner shall be as specified elsewhere in the specification. For flue liner with base metal as mild steel, the thickness of the base metal shall be determined from structural considerations. The thickness of any clad metal/coating/block lining etc. provided on the base metal shall not be considered for computing the structural strength of flue liner. The minimum thickness of the mild steel base metal shall, however, not be less than that specified elsewhere in the specification. Two manholes placed diametrically opposite shall also be provided in each flue at all internal platform levels. The supporting/restraining arrangements of the liners should be such that expansion of the liners longitudinally or circumferentially is not restrained. Clean-out door shall be provided below the flue for the removal of ash.
□.14.0□	**I□□□r□□□P□□□□r□ □** The platforms shall be designed for dead, imposed (live), erection work and other possible loadings and temperatures effects. These platforms shall provide support and lateral restraint to the steel liners and provide access for inspections and maintenance. Forces imposed on the floors due to lateral restraint of flues shall be enhanced aptly for impact effects. These platforms shall also be designed suitably for

the liner erection works. The platform shall be made up of chequered floor panels supported on grid of structural steel beams. All beams shall have bolted connections. The maximum permissible deflection in main steel girders supporting flue liner shall be span/1000.

□.14.0□ I□□r□□□S□□r□□□□

The staircase shall have a clear passage way width of not less than 800 mm and a clear headroom of not less than 2100 mm. The riser height shall not be more than 175 mm and tread width shall not be less than 225 mm.

□.14.0□ F□□□d□□□□

The chimney foundation shall be designed for the most critical combination of forces and moments, resulting from all possible combinations of the various loadings from the chimney system during all stages of constructions. The effect of water table shall be considered and the foundation shall be checked for overturning for minimum and maximum vertical loads. There should be no uplift under any portion of the foundation for any loading condition. Since chimney is a wind sensitive structure no allowance shall be made in the load carrying capacity of the bearing strata / piles under any load case/combination with wind. No allowance shall be made in the stresses for design of foundation for wind loading. The foundation diameter to depth ratio shall be maintained to around 10 and should preferably not exceed 12. The diameter of the reinforcing bar for the main radial and tangential reinforcement for the foundation shall not be less than 25mm. The spacing of radial steel at the outer edge of the foundation shall not be more than 250mm. Grade of concrete for foundation shall be minimum M 25.

□.14.0□ T□□r□ □□□□□□□□□□□□

The insulation shall be semi-rigid, resin bonded type, in the form of slabs and shall conform to IS: 8183. Blanket type insulation shall not be used. The density of insulation shall not be less than 64 kg/cu.m for resin bonded glass wool insulation and 100 kg/cu.m for resin bonded rock wool. The coefficient of thermal conductivity of insulation shall not be more than 0.52mW/cm/oC at a mean temperature of 100oC.

The insulation thickness shall be determined based on the maximum/minimum ambient temperature, surface air velocity worked out based on the draught of ventilation air in the annular space between the flue liner and chimney shell, insulation surface emissivity of 0.3 and the insulation cold face maximum temperature not exceeding 55 degree Celsius. The draught of air in the annular space shall be the natural draught created by the heating of air by the flue liner and the air being vented out through the openings in the chimney shell. The increase in the annulus air temperature due to the rising heated air shall be taken into account while calculating the insulation thickness.

The insulation thickness shall not be less than 100 mm, in any case, and shall be provided in two layers with the second layer of insulation covering the joints of the first layer. The insulation shall be wrapped on the outer-most surface with galvanised wire mesh using MS galvanised pins and speed washer.

CLAUSE NO.	TECHNICAL REQUIREMENTS
□.14.0□	**C□□□ □□□ P□□□□□□□**

(i) All exposed steel surfaces (including exterior surface of mild steel flue liner in case the design does not envisage provision of thermal insulation on the exterior surface of flue liner) except surfaces of steel wind strakes shall be painted as specified in corrosion protection clause of this specification.

(ii) All exposed surfaces of steel wind strakes shall be painted with epoxy phenolic coating system having total 240 microns DFT.

a) All steel surfaces shall be provided with two component epoxy primer coat (having solid by volume minimum 51% ±2%) of minimum 70 micron DFT to be applied over blast cleaned surface conforming to Sa 2½ finish of ISO 8501-1 with surface profile 40-60 Micron. The primer coat shall be applied in shop immediately after blast cleaning by airless spray technique.

b) Primer coat shall be followed with the application of Intermediate coat of epoxy phenolic coating (solid by volume minimum 63%) of minimum 100 micron DFT. This coat shall be applied in shop after an interval of minimum 24 hours (from the application of primer coat) by airless spray technique.

c) Intermediate coat shall be followed with the application of finish coat of two-pack aliphatic Isocyanate cured acrylic finish paint (solid by volume minimum 55% ±2%) with Gloss retention (SSPC Paint Spec No 36, ASTM D 4587, D 2244, D 523) of Level 2 (after minimum 1000 hours exposure, Gloss loss less than 30 and colour change less than 2.0 ΔE) and minimum 70 micron DFT. This coat shall be applied in shop after an interval of minimum 10 hours and within six (6) months (from the completion of Intermediate coat), Colour and shade of the coat shall be as approved by the Employer.

(iii) All steel parts embedded in concrete like Strake embedment assembly including bolts, nuts, washers, pipe sleeves and insert plate shall be galvanized as per IS:4736. The minimum weight for galvanizing shall be 610 g/sq.m and shall comply with relevant IS Codes.

(iv) The inside surface of chimney shell above roof, horizontal surface of shell at top, underside of concrete roof slab, external surface of mini-shell above roof etc shall be painted with epoxy phenolic coating system having total 220 microns DFT.

a) All concrete surfaces shall be provided with two component transparent polyamide cured epoxy sealer coating (having solid by volume minimum 40% ±2%) of minimum 50 micron DFT to be applied over cleaned surface in multiple coats. Surface to be coated shall be absolutely dry, clean and dust free.

b) Sealer coat shall be followed with the application of Intermediate coat of epoxy phenolic coating (solid by volume minimum 63%) of minimum 100 micron DFT. This coat shall be applied after an interval of minimum 24 hours (from the application of primer coat) by airless spray technique.

c) Intermediate coat shall be followed with the application of finish coat of two-pack aliphatic Isocyanate cured acrylic finish paint (solid by volume minimum 55% ±2%) with Gloss retention (SSPC Paint Spec No 36, ASTM D 4587, D 2244, D 523) of Level 2 (after minimum 1000 hours

CLAUSE NO.	TECHNICAL REQUIREMENTS
	exposure, Gloss loss less than 30 and colour change less than 2.0 ΔE) and minimum 70 micron DFT. This coat shall be applied after an interval of minimum 10 hours and within six (6) months (from the completion of Intermediate coat), Colour and shade of the coat shall be as approved by the Employer. d) The entire external surface of chimney shell shall be painted with epoxy phenolic coating as specified in (iv) above in alternate bands of 'signal red' and 'bright white' colours.
□.14.10	**E□□□r□□□S□□□□**
	415V, normal and emergency AC power supply for chimney shall be derived from main plant power supply system. Emergency supply shall feed 20% of platform lighting, 50% of staircase lighting, aviation obstruction lighting and elevator load. All other loads shall be connected on normal power supply. Ambient temperature for design of all equipment shall be considered as 55 deg. C which is likely to be encountered inside the chimney. The equipment shall be suitable for installation and render trouble free operation at higher ambient temperature and rigorous weather conditions prevailing at chimney. All equipment supplied shall comply with relevant IS Standards. The distribution boards of chimney shall comprise switch fuse units of appropriate ratings. Emergency board shall have two incomers, one from emergency supply and other from normal AC distribution board itself. Auto changeover scheme shall be provided in emergency board to enable changeover to healthy source on failure of any source. Dry type isolating transformer of Dyn connection shall be provided in emergency board to obtain neutral lead, in case 3 phase 3 wire emergency supply is derived from main plant. Various platforms shall be illuminated by dust tight HPSV well glass lighting fixtures. Average illuminations level of 150 lux shall be maintained on equipment and 70 lux on platforms & 100 lux on staircases (minimum 1 lighting fixture at each landing).Any additional fixture to take care of dark patches/shadows shall also be provided. Lighting system shall be controlled through MCB provided in lighting panel. A lighting and power panel each shall be located at grade level and at other in between levels as required. All distribution boards, aviation lighting controls, etc. shall be located at grade level only. At each platform, 1 No. 63A, 415V welding receptacle and 1 No. 20A, 240V receptacle shall be provided and shall be fed from power panel. Wiring installation for lighting fixture shall be of PVC insulated copper/aluminium wires through galvanised steel conduits. Aviation obstruction lighting system shall conform to the requirements of the latest rules and regulations of the International Civil Aviation Organization (ICAO), National Airports Authority (NAA) and Directorate of Air Routes and Aerodromes (DARA). The type of aviation obstruction lighting system shall be of medium intensity aviation obstruction lights having an effective intensity of 2000 to 20,000 cd depending upon back ground illuminance. Obstacle lights shall have a day time effective intensity of minimum 20000 cd. The intensity of lights shall be 20000 cd ± 25% at twilight and shall reduce automatically to a night time intensity of 2000 cd ± 25% through the use of photo-cell. The obstacle lights shall flash simultaneously at a rate between 20 to 60 per minute. A minimum of three levels will be provided with aviation obstruction

CLAUSE NO.	TECHNICAL REQUIREMENTS
	lights and there will be four light units per level. The lowest level should not be lower than 45 meters above the ground and vertical spacing of the intermediate levels could vary between 45 and 105 meters. The intermediate lights shall be spaced as equally as possible. Aviation obstruction lighting shall be complete with lights, photo cell, controller, special cables, etc.. A temporary aviation obstruction lighting system shall be provided during construction of the chimney. Cables from distribution board to lighting panels/power panels/receptacles shall be 1100V grade, multicore FRLS HR-PVC insulated, PVC inner sheathed, armoured, PVC outer sheathed stranded copper/ Aluminuim laid on galvanised sheet steel cable trays. Cables shall be terminated using double compression type cable glands and solder less crimping type tinned copper cable lugs. Minimum size of the power cable shall not be less than 2.5 sq.mm copper or 4 sq.mm Aluminuim. Minimum size of control cable shall not be less than 1.5 sq.mm. Lightning protection system shall comprise minimum 3 vertical air terminations for each flue liner, horizontal air terminations and minimum 4 Nos. of down conductors spaced 90 degrees apart routed all along chimney height on external surface and connected to the earthing system. Down conductors shall be of minimum 50x6 mm galvanized steel strip. Each down conductor shall be provided with a test link at 1 metre above ground level. Each test link shall be enclosed in a galvanised sheet steel enclosure. Above ground level earthing and lightning protection system shall comprise galvanised steel strips. These materials provided at top 12 meters shall have additional coating of 2 mm thick seamless lead cover and the accessories like nuts, bolts, washers etc. shall be of stainless steel to take care of corrosion. Chimney earthing system shall be interconnected to main plant earthing system. A temporary lightning protection & earthing system shall be provided during construction of the chimney till a permanent lightning protection & earthing system is installed. In no case reinforcement bars of Shell should be used as earthing Down Conductors Communication system comprising of telephone socket at every internal platform level and at grade level, necessary wiring installation, a telephone hand set, junction boxes etc. shall also be provided. Telephone cables shall be of minimum 0.6 mm diameter annealed high conductivity electro copper conductor, PVC insulated, twisted, PVC tape wrapped, screened, rip corded, PVC sheathed, conforming to relevant ITD (Indian Telephones Department) specifications. All equipment to be supplied shall be of type tested quality. The Contractor shall submit for Owner's approval the reports of all type tests as listed below: (A) Distribution boards/panels-Degree of protection tests (B) Aviation lights: (1) Intensity Test (2) Degree of protection test For various equipment, the technical requirements and practices shall conform to the relevant clauses of the main plant electrical specification.
□.14.11	**R□□□ □□d P□□□□ E□□□□□r** A rack and pinion elevator, with a load carrying capacity of 400 kg (min) (passenger cum goods), cabin floor size of 1100 mm x 1000 mm (min.) and an operating speed

CLAUSE NO.	TECHNICAL REQUIREMENTS
	of 40 m/min. (approx.), shall be provided for travel from the grade level to the top of the chimney. A landing platform shall be provided at all access/ platform levels. The elevator shall be of a proven and approved make. Enclosure shall be fabricated from tubular steel and expanded metal or wire mesh, 2.1 m high (Approx.). A Safety device comprising of an over speed governor in constant mesh with the rack by means of a flame hardened steel pinion shall be provided to protect the cab against over speed during the cab downward motion and the same shall actuate the brake mechanism and stop the down ward motion gradually. The lift shall be installed using anchor fasteners. The electrical requirement of the system shall conform to the main electrical specification. Drive motor shall be of S3 duty class with CDF of 25% and maximum number of 120 starts per hour in 55 degree Celsius ambient temperature. The motor shall be provided with internal 220V AC single phase space heaters or an alternate heating system. The elevator shall be supplied, installed, painted, tested, commissioned etc. complete with all mandatory spares (as specified in Part-F of this specification) and operation maintenance manual
4.00.00	**Dr□□□□□□ □ W□□□r S□□□□□ W□r□□**
4.01.00	Drainage System: The drainage arrangements shall be so planned so as to ensure quick disposal of drainage water without stagnation and / or overflow. It is envisaged to clean the facility buildings etc. with water periodically. Minimum 4 nos. down comers shall be provided in each building at corners. For Conveyors, each down comer shall lead the water / slurry to pit (of 2 Cu.M capacity) to allow settling of lime/gypsum. The water from the pit shall overflow into contractor's R.C.C drain, which will lead the discharge finally into owner's drain routed alongside the nearby road. For Ball Mill building, Gypsum dewatering building, FGD control room building, peripheral drains (Brick drains with steel gratings provided around the building) shall lead the water / slurry to a local pit (of 2 Cu. M. capacity) near each facility to allow settling. The water from the pit shall overflow into contractor's R.C.C drain, and finally into owner's drain routed alongside the nearby road. In case of Control rooms and M. C. C. buildings Pump houses, etc, water / slurry coming from down comers shall discharge into peripheral drains (Brick drains with steel gratings provided around the building) which will lead the water / slurry into contractor's R.C.C drain, which will lead the discharge finally into owner's drain routed alongside the nearby road. Contractor's scope shall also include construction of necessary culverts under the rail lines / roads as per railway / I. R. C. standards and approval of Railway culverts from concern Railway authorities.
4.02.00	**I□□□r□□□□□d □□□□r□□□□ □□□r □□□□□□□□dr□□□□□□ □□□.** The scope for potable water supply includes all distribution systems, tanks, pipes, fittings etc. as required and as described here or elsewhere in the specifications.

CLAUSE NO.	TECHNICAL REQUIREMENTS
	The scope for service water supply and dust control water supply shall be as described elsewhere in the specifications. For water supply, medium class galvanized mild steel pipes conforming to IS: 1239 shall be used. All facility buildings shall be provided with open surface brick drains of minimum size of 300 mm width and 300 mm depth all around the periphery. All drains excepting the peripheral drains around facility building shall be of R. C. C. construction. Drains shall have removable steel grating cover and shall be provided with edge protection angles. The scope for foul water from toilets shall include layout and laying of sewers up to the Employer's main sewer line for sewerage system together with all fittings and fixtures and inclusive of ancillary works such as connections, manholes and inspection chambers within the building and from the building to the Employer's sewer line. For rain water down comer and those to be used for conveying water / slurry generated from cleaning of buildings floors, Galvanised MS pipes conforming to IS: 1239 (for 150 mm NB Medium grade pipes) with welded joints shall be used for MCC buildings, penthouse, control rooms, ball mill building, gypsum dewatering building, storage sheds. Galvanising shall be as per IS: 4736. The minimum mass of zinc coating shall not be less than 400 gms/sq.m. as per IS:6745. The zinc coating shall be smooth and shall be subjected to testing as per IS: 2633, for uniformity of coating. The zinc coating shall be free from all defects as per IS: 2629. All rain water down comers shall be provided with roof drain heads and complete with shoes bends, junctions, sockets, adapters, brackets and finished with anti corrosive painting over a coat or primer. For design of building drainage system IS: 1742 shall be followed. For sanitary / sewerage pipes above ground, sand cast iron pipes conforming to IS : 1729 with leak proof lead joints. For underground drain pipes, minimum class NP - 2 pipes conforming to IS: 458. At road crossings, concrete pipes of class NP 3 conforming to IS: 458 and at rail crossing R.C.C. box culvert to be provided. For sewerage below ground stoneware pipes conforming to IS: 651 with concrete bedding and haunch.
□.00.00	**COLOUR COATED AND OTHER SHEETING WORK**
□.01.00	**M□□□r□□□** □) **W□□□C□□dd□□□ □ R□□□□□□ M□□□r□□□** Troughed permanently colour coated sheet of approved shade and colour shall be

□) either of steel with minimum 0.6mm bare metal thickness (i.e. excluding the thickness of galvanizing/aluminium-zinc coating and painting) of grade G250 as per AS1397 / grade SS255 as per ASTM A653M / grade S250GD as per EN 10326 with zinc coating to class Z275 / aluminium-zinc alloy coating to class AZ150

□□) or of minimum 0.5mm BMT (i.e. excluding the thickness of galvanizing/aluminium-zinc coating and painting) of grade G350 as per AS1397 / grade SS340 class 4 as per ASTM A792M / grade S350GD as per EN 10326 with zinc coating to class Z275 / aluminium-zinc alloy coating to class AZ150

□□□) or of steel of minimum 0.4mm BMT (i.e. excluding the thickness of galvanizing/aluminium-zinc coating and painting) of grade G550 as per AS1397 / grade SS550 as per ASTM A792M / grade S550GD as per EN 10326 with zinc coating to class Z275 / aluminium-zinc alloy coating to class AZ150

Alternatively aluminium feed material of minimum bare metal thickness of 0.7 mm of aluminium alloy of Series 31000 and above as per IS: 737 and IS: 1254.

□) M□□□□D□□□ R□□□M□□□r□□□

Troughed permanently colour coated metal decking sheets shall be

□) either of steel with minimum 0.8mm bare metal thickness (i.e. excluding the thickness of galvanizing/aluminium-zinc coating and painting) of grade G250 as per AS1397 / grade SS255 as per ASTM A653M / grade S250GD as per EN 10326 with zinc coating to class Z275

□□) or of minimum 0.6mm BMT (i.e. excluding the thickness of galvanizing/aluminium-zinc coating and painting) of grade G350 as per AS1397 / grade SS340 class 4 as per ASTM A792M / grade S350GD as per EN 10326 with zinc coating to class Z275

□□□) or of steel of minimum 0.6mm BMT (i.e. excluding the thickness of galvanizing/aluminium-zinc coating and painting) of grade G550 as per AS1397 / grade SS550 as per ASTM A792M / grade S550GD as per EN 10326 with zinc coating to class Z275.

Alternatively aluminium feed material of minimum bare metal thickness of 0.9 mm of aluminium alloy of Series 31000 and above as per IS: 737 and IS: 1254 can also be used for metal decking.

Thickness tolerance of (+/-) 0.04mm is permissible. However, all design calculations shall be carried out on the basis of lowest value of sheet thickness provided.

□.02.00 C□□□□r C□□□□□□

Steel shall be colour coated with total coating thickness of at least 40 microns (nominal) comprising of silicon modified polyester (SMP with silicon content of 30% to 50%) paint or Super Polyester paint, of minimum 20 microns (nominal) dry film thickness (DFT) on external face over primer coat of minimum 5 microns (nominal) and minimum 10 microns (nominal) SMP or super polyester paint over primer coat of minimum 5 microns (nominal) on internal face. SMP and Super polyester paint systems shall be of industrial finish of product type 4 of AS/NZ2728.

□.0□.00 D□□□□□ Cr□□r□□

For wall cladding insulated / uninsulated sides and roof, permanently colour coated sheet of troughed profile shall be used. The nominal depth of trough shall be 30 mm.

For profiled metal decking sheets (to be used for RCC floor slab or roof slab) the sectional modulus and moment of inertia of troughed profile per meter width shall be so as to limit the deflection of sheets to span/250 under total super imposed loading (DL +LL) comprising the self-weight of metal deck sheet, dead weight of green concrete and an additional construction load 100kg per sq.m for two span condition. The section modulus and moment of inertia of troughed profile shall be computed as per the provisions of IS: 801 for satisfying the deflection and strength requirements.

For metal deck sheets used for roofing (with or without RCC) and side cladding, the sectional modulus and moment of inertia of troughed profile per metre width shall be such that the deflection of sheets is limited to span/250 under design wind pressure for two span condition. The sectional modulus and moment of inertia of troughed profile shall be computed as per the provisions of IS: 801 for satisfying the deflection and strength requirements. No increase in allowable stress is permissible under wind load condition.

□.04.00 **F□□□□□r□**

Side cladding/roofing/decking sheets shall be fixed to the runner/purlins using self-drilling special coated fasteners confirming to corrosion resistant class 3 of AS3566 and tested for 1000 hours salt spray test. Spacing of Self-drilling fasteners in transverse direction (along runners/purlin) shall be equal to the pitch of trough or 250(+/-100) mm, whichever is lesser and in longitudinal direction at every runner/purlin location.

Shear anchor studs shall also be provided through troughed permanently colour coated metal decking sheets metal deck, which are to be used as permanent shuttering, at regular interval on all top flange / flange plate of structural beams.

The shear anchor studs for fixing metal deck sheet to floor structural beams shall conform to Type-B studs specified in AWS D1.1/D1.1M or equivalent as shear connector of 19mm diameter and 100mm length manufactured from cold drawn round steel bars conforming to the requirement of ASTM A 29, of grade designation 1010 through 1020, of standard quality with either semi-killed or killed, welded by Drawn Arc Stud Welding through metal deck sheet.

The shear anchor studs for fixing metal deck sheet to roof structural purlins shall conform to Type-B studs specified in AWS D1.1/D1.1M or equivalent as shear connector of 16mm diameter and 65mm length manufactured from cold drawn round steel bars conforming to the requirement of ASTM A 29, of grade designation 1010 through 1020, of standard quality with either semi-killed or killed, welded by Drawn Arc Stud Welding through metal deck sheet.

Alternatively, J/U type hooks shall be used in roofing which shall be provided in transverse direction (along runners/purlin) at a spacing equal to the pitch of trough or 250(+/-100) mm, whichever is lesser and in longitudinal direction at every runner/purlin location.

□.0□.00 **M□□□□□□□□□□□□ D□□□□□**

To minimize the number of joints, the length of the sheet shall preferably be not less than 4.5m, cut pieces shall not be used, unless specifically approved by the Engineer. However, the actual length shall be such so as to suit the purlin / runner spacing.

Lap between the sheets shall be at least 150mm in the longitudinal direction and at least one crest wide in the transverse direction which shall be properly anchored / fixed with fasteners.

Z spacers if required shall be made of at least 2 mm thick galvanised steel sheet of grade 350 as per IS: 277

Sealant used for cladding shall be butyl based, two parts poly sulphide or equivalent approved, non stainless material and be flexible enough not to interface with fit of the sheets

. Filler blocks as a trough filler shall be used to seal cavities formed between the profiled sheet and the support or flashing. The filler blocks shall be manufactured from black synthetic rubber or any other material approved by the Engineer.

All flashings, trim closures, caps etc. required for the metal cladding system shall be made out of plain sheets having same material and any weather/moisture sealants with appropriate material and coating specification as mentioned above for the outer face of the metal cladding. Overlap shall be min. 150 mm or as specified by manufacturer.

□.0□.00 Pr□-F□□r□□□□d I□□□□□□d M□□□□S□□d□ □□□ P□□□□□

For structures where Pre-Fabricated Insulated Metal Sandwich Panels shall be used for Roofing, the sandwich panels shall comprise top sheet as troughed permanently colour coated sheet & bottom sheet as plain permanently colour coated with 50mm thick insulation sandwiched between the two sheets. Each sheet shall be

□) either of steel with minimum 0.6mm bare metal thickness (i.e. excluding the thickness of galvanizing/aluminium-zinc coating and painting) of grade G250 as per AS1397 / grade SS255 as per ASTM A653M / grade S250GD as per EN 10326 with zinc coating to class Z275 / aluminium-zinc alloy coating to class AZ150

□□) or of minimum 0.5mm BMT (i.e. excluding the thickness of galvanizing/aluminium-zinc coating and painting) of grade G350 as per AS1397 / grade SS340 class 4 as per ASTM A792M / grade S350GD as per EN 10326 with zinc coating to class Z275 / aluminium-zinc alloy coating to class AZ150

□□□) or of steel of minimum 0.4mm BMT (i.e. excluding the thickness of galvanizing/aluminium-zinc coating and painting) of grade G550 as per AS1397 / grade SS550 as per ASTM A792M / grade S550GD as per EN 10326 with zinc coating to class Z275 / aluminium-zinc alloy coating to class AZ150.

Alternatively aluminium feed material of minimum bare metal thickness of 0.7 mm of aluminium alloy of Series 31000 and above as per IS 737 and IS 1254.

Metal sheets (steel or aluminium) shall be colour coated with total coating thickness of at least 40 microns (nominal) dry film thickness (DFT) comprising of Silicon Modified Polyester (SMP with silicon content of 30% to 50%) paint or Polyester paint, of minimum 20 microns (nominal) SMP or polyester paint on one side (exposed face), over minimum 5 micron (nominal) primer coat and minimum 10 micron (nominal) SMP or Polyester paint over minimum 5 micron (nominal) primer coat on other side. SMP and Super Polyester paint shall conform to product type 4 of AS/NZS 2728. Troughed sheet shall be of approved profile, sectional properties, (suitable for the specified loading / deflection and purlins / runners spacing), colour and shade.

CLAUSE NO.	TECHNICAL REQUIREMENTS
	Special coated fastener conforming to corrosion resistant Class 3 of AS3566 and tested for 1000 hours salt spray test shall be used for fixing Pre-Fabricated Insulated Metal Sandwich Panels with the structural members below. The contractor shall prepare working drawings of sheeting system including end and side laps, fixing details etc. before starting sheeting work at site.
□.0□.00	**P□□□□r□□□□□ S□□□□**
	The polycarbonate sheet to be used for cladding and glazing purpose in conveyor galleries, Transfer points & pump houses shall have toughed profile to match with the metal cladding profile. Minimum 3.0mm thick fire retardant and UV resistant polycarbonate clean sheet of approved make shall be used. The polycarbonate sheet shall be installed along with the metal cladding so as to have a watertight lapping arrangement. Suitable detailing shall be made to cater for the thermal expansion. IS 14434 to be referred for other details
□.00.00	**R□□□D□□□□**
□.01.00	Roof slab shall be minimum 150 mm thick(□□□□□ □□□ □□□ □□**r**□□□□ **(**□**r**□□□**)** □□□□□ □ □□□□ **d**□□□ □□□□□) and shall have minimum 10 dia HYSD reinforcement bars placed at 200 mm center both ways at top and bottom.
□.02.00	900 mm high and minimum 100 mm thick R. C. C. parapet wall shall be provided over roofs of all buildings. Parapet wall shall have suitable coping. External face of parapet wall of the buildings provided with metal cladding shall also be finished with metal cladding of design and colour as per approved architectural drawings.
□.0□.00	Junction of roof and parapet shall be provided with 150 x 150 mm size concrete fillet.
□.04.00	Drain level shall be provided with 45 x 45 cm size khurras having minimum thickness of 30 mm of M-15 concrete over PVC sheet of 1 m x 1m x 400 micron and finished with 12 mm 1 : 3 cement : sand plaster.
□.0□.00	Roofs of all control rooms, M. C. C. rooms, penthouse etc., shall have roof water proofing treatment. Roof water proofing treatment shall be as follows: 1) Application of polymerised mastic over the RCC roof to achieve smooth surface as primer coat. 2) Application of high solid content liquid applied urethane based elastomeric water proofing membrane, over the primer coat, to give uniform joint less dry film thickness of minimum 1.5 mm (as per ASTM C 836 and C 898). 3) For efficient disposal of rain water, the run off gradient for the roof shall not be less than 1: 100. This gradient shall be provided by screed concrete M-15 (using 12.5 mm coarse aggregate) and / or cement mortar (1: 4) over the elastomeric water proofing membrane with 25mm thick cement mortar (1:4) topping. 4) Wearing course at top, shall consist of 25 mm thick P. C. C. (M-15) cast in panels of maximum 1.2 x 1.2 m size and reinforced with 0.56 mm diameter galvanized chicken wire mesh and sealing of joints using sealing compound / elastomeric water proofing membrane. Pathways for handling of materials and movement of personnel shall be provided with 22 mm thick chequered cement concrete tiles as per IS : 13801 for a width of 1000 mm in place of P. C. C.
□.0□.00	For efficient disposal of rain water, the run off gradient for the roof shall not be less than 1:100. This gradient can be provided either in structure or subsequently by

CLAUSE NO.	TECHNICAL REQUIREMENTS
	screed concrete M-15 (using 12.5 mm coarse aggregate) and/ or cement mortar (1:4). However, minimum 25 mm thick cement mortar (1:4) shall be provided on top to achieve smooth surface.
□.0□.00	Medium class galvanised mild steel pipes conforming to IS: 1239/ IS: 3589 with welded joints shall be provided for rain water down comers to drain off rain water from the roof. These shall be suitably concealed with masonry work, to match with the exterior finish. The number and size of down comers shall be governed by IS: 1742 and IS: 2527. RCC roof shall be provided with 45 x 45 cm size Khurras having minimum thickness of 30 mm with M-15 concrete over PVC sheet of 1mx1mx400micron and finished with 12 mm thick cement sand plaster 1:3.
□.0□.00	Access to RCC roof of Gypsum dewatering building, FGD Control room building, MCC building, Ball mill building shall be through RCC staircase, and roof access to all other buildings all shall be through cage ladder as per requirement.
□.0□.00	Fillets at junction of roof and vertical walls shall be provided with cast - in - situ cement concrete (M-15) nominal mix followed by 12 mm thick 1:4 cement sand plaster.
□.10.00	The rainwater down comers shall be provided with suitable C.I. grating at inlet point.
□.00.00	**RCC F□□r□□P□□□□ □ Gr□d□ S□□ d□□□□**
	The floor slabs shall be minimum 150 mm thick(above the top surface (crest) of the metal deck sheet) and shall have minimum 10 dia HYSD reinforcement bars placed at 200 mm center both ways at top and bottom. In case Bidder opts for steel super-structure with RCC floors/ roof, the bidder shall necessarily use Troughed permanently colour coated metal decking sheets having minimum thickness of 0.8mm as permanent shuttering. The detailed material property requirement of metal deck sheet is specified elsewhere in the specification. These profiled metal deck sheets shall be fixed to the structural steel beams/ purlins using headed shear anchor studs specified elsewhere in the specification. Chequered plates (used for floors, walkways etc.) shall be minimum 6 mm thick. Mild steel flats/angles of suitable size shall be welded to the bottom portion of chequered plates at a designed spacing to stiffen chequered plates suitably. Chequered plates shall be fixed by staggered welding of suitable size. Floors of trenches shall have integral finish to concrete base. Toe guard of size 100 x 6 mm shall be provided at various openings provided in floors e.g. around stair case openings, chute openings and other similar cutouts. For conveyor walkways, angle runner to act as toe guard shall be provided. R. C. C. floors (where no brick masonry walls are provided) shall be provided with handrails all along the periphery. RCC paving of minimum 150 mm thick with M25 grade concrete, over an under bed as specified herein shall be provided for areas mentioned below. RCC paving shall be designed as rigid reinforced concrete pavement for the crane/ vehicular/ equipment movement loads which the paving has to bear. The under bed for paving shall consist of preparation and consolidation of sub-grade to the required level, laying of stone soling of 200mm compacted thick for normal duty paving and 400mm

compacted thick for heavy duty paving with 63 mm and down aggregate with interstices filled with selected moorum/ non-expansive soil followed by 75 mm thick 1:4:8 PCC (1 part cement, 4 parts sand and 8 parts stone aggregate) with 40 mm nominal size aggregate. For normal duty paving, reinforcement of the RCC paving shall consist of minimum 8mm dia bars @ 200 mm c / c in both directions at the centre of the slab. For heavy duty paving/ passage, reinforcement of the RCC paving shall consist of minimum 10mm dia bars @ 200 mm c / c in both directions at the centre of the slab.

Paving areas shall be provided with the metallic hardener floor finish as specified elsewhere in the specification.

Passages shall be provided inside the FGD block connecting to the outer periphery road to have access to the various facilities/buildings. These passage areas shall be provided with heavy duty paving for movement of heavy vehicles. The top surface of the passages shall be finished with 50 mm thick metallic hardener topping. Heavy duty paving shall also be provided for the areas in the equipment lay down area, unloading & maintenance area with 50 mm thick metallic hardener topping.

Lightly loaded areas such where no heavy traffic movement is envisaged shall be provided with Normal Duty paving.

All facility buildings shall be provided with 750 mm wide plinth protection all around. It consists of 50 mm thick P.C.C. M-20 grade with 12 mm maximum size aggregate over 200 mm thick stone soling using 40 mm nominal size rammed, consolidated and grouted with fine sand

An area of minimum 5 m width all around the tank foundations and other facility buildings shall be paved. This paving shall be beyond the extent of plinth protection. Further, heavy duty paving shall be provided for passages connecting the outer periphery road to have access to the various facilities/buildings.

Plinth level of all buildings shall be kept at least 500 mm above the finished grade / formation level.

Suitable open RCC drains shall be provided to dispose off storm water drain. The paving shall be provided with slope of 1:500 to dispose the surface water/wash water to the nearest drain.

Sewer lines (Cast Iron), interconnected by sewer manholes (RCC) at regular intervals (not exceeding 30 meter centre to centre) shall be provided to dispose off sewage from FGD block to sewage pump house.

GRADE SLAB OF BUILDINGS AT GROUND FLOOR

In buildings, the grade slab shall consist of 150mm thick RCC M25 grade base slab over an under bed as specified below. The under bed for ground floor slab shall consist of 75mm thick 1:4:8 PCC on stone soling of 200mm compacted thick with 63 mm and down aggregate with interstices filled with well graded selected sand/ moorum/ non-expansive soil on compacted and dressed sub - grade. Reinforcement for the slab shall consist of minimum 8mm dia. bars @ 200 mm c/c at top & bottom of the slab in both directions. However, at unloading & maintenance area, stone soiling of minimum 400mm thick and grade slab with minimum 10mm dia bars @ 200 mm c/c at top and bottom in both directions shall be provided.

Further, top surface of grade slabs shall be finished with 50mm thick metallic hardener topping.

CLAUSE NO.	TECHNICAL REQUIREMENTS
□.00.00	**Br□□□□ □r□ □□d □□□□d □ □□□□r□ □ □r□□**
	All brick walls shall be non - load bearing in-filled panel walls. All brickwork shall be designed as per Indian Standards and shall be plastered on both faces. All external walls shall be minimum one brick thick in 1: 6 cement: sand mortar. Brick walls shall be provided with 12 mm and 18 mm thick 1: 6 cement: sand plaster on smooth and rough face of the brick work respectively. Bricks to be used in brickwork shall be of minimum Class designation 50. Brickwork cladding for various structures shall be so provided that there is a clear gap of 40 mm between inside face of external brick wall and outside face of column flange. Structural steel wall beams supporting brickwork shall be suitably encased with plaster or 1: 2: 4 concrete as the case may be. In case of box type steel beam, encasement shall be done with cement sand plaster in specified thickness and proportions over G. I. wire netting of 0.9 mm thickness. Parapets, chajjas, windows and door heads, architectural faces, fins etc. shall be provided with drip course in 1 : 4 cement sand mortar. 50 mm thick Damp proof course shall be provided at plinth level for all brick wall. All R. C. C. ceilings shall be rendered smooth and finished with whitewash unless otherwise specified. Ceiling of control rooms, M. C. C. rooms (except areas provided with false ceiling) shall be provided with 6 mm thick plaster.
□.00.00	**E□r□□□□ M□□**
	40 mm Dia MS Rods as earthing mat, placed at a distance of 1.0M away and at depths between 0.60M and 1.00M shall be supplied and laid all around the periphery of buildings, structures, and outdoor equipment, as per the approved drawings. Risers of 40 mm Dia MS Rods and connecting to the above Earthing mat shall also be supplied and laid in position by the Contractor, as per the approved drawings. Risers shall be laid up to a height of 300 mm above the local Ground level, at each of the columns of the buildings on outside of the buildings, and minimum 2 (Two) numbers for structures and outdoor equipment. The contractor also supply and lay necessary number of 3.0 M deep vertical 40 mm Dia MS Rods Earthing electrodes and connecting them to the Earthing mat, as per the approved drawings and the supplying and laying of 40 mm Dia MS Rods for connecting the Contractor's earthing mat with the Employer's earthing mat separately at two locations.
10.00.00	**SITE LE□ELLING**
	Site leveling of gypsum storage area , lime storage area , gypsum dewatering area , truck hopper and associated areas to be levelled in one blocks as defined in the drawing no. 4410-999-POC-F-001 titled, "Layout plan of FGD System ". Each block shall be finished to the formation level as specified in drawing. Bidder shall deploy adequate number of experienced site leveling contracting agency(s) with requisite earth moving and compacting equipment to complete the work as per schedule.

CLAUSE NO.	TECHNICAL REQUIREMENTS

Bidder shall carry out the topographical survey before he commences detailed design and site leveling. This survey shall cover the entire FGD area including gypsum storage ,gypsum handling area , lime storage area ,gypsum dewatering area , truck hopper area, limestone grinding and slurry storage area in Bidder's scope of work. Based on field observations the contractor shall prepare and submit for Owners review the survey maps of the surveyed sited on suitable scale, indicating grid lines, contour lines and demarcating all permanent features like roads, railways, water-ways, buildings, power lines, natural streams, trees etc. For each area two sets of survey maps shall be prepared and submitted, one showing the spot levels and contours with grid lines and the other showing the grid lines, contours and permanent features

Since the construction of roads and drains for the FGD area including gypsum storage ,gypsum handling area , lime storage area ,gypsum dewatering area , truck hopper area, limestone grinding and slurry storage area is included in the scope of Bidder, it shall be the responsibility of the Bidder to ensure that these facilities are also constructed along with site leveling works. Bidder shall ensure that road access and drainage facilities for each block is available when site leveling in that block is completed. Unless otherwise instructed by the Engineers, all roads and drains within a block shall be constructed by the bidder within a month from the date of completion of site leveling of that block.

The specified formation level(s) shall be achieved either by excavation where the existing ground levels are higher than the specified formation level or by raising by controlled filling with borrowed earth where the existing ground levels are lower than the specified level

All materials arising out of site clearance and excavation shall be the property of owner. They shall be dealt with in the manner specified by the Engineer. Earth / boulders / rock etc. excavated and useful portion (serviceable materials) of trees cut shall be stacked at suitable places within Owner's acquired land for the plant including the reservoir and the ash disposal area in a manner as directed by the engineer. Woods, branches, trunks of trees shall be termed as serviceable material. Other materials like twigs, leaves, roots, vegetable and organic matters etc. shall be termed as unserviceable material and shall be sorted out from the serviceable materials before disposal. They shall be cleared from the area and disposed off at places within Owner's acquired land for the plant including the reservoir and the ash disposal area in a manner as directed by the engineer.

If the excavated material is suitable and accepted by the Engineer as fill material, the same can be used for filling in other areas where raising by filling is required. Otherwise the same shall be taken and stacked at places(s) within the plant boundary as directed by the Engineer.

Filling with rock shall be done only after the written permission of the Engineer in the following manner:

Filling with rock shall be done only in areas identified for laydown and preassembly .

Original ground after removal of all organic and vegetable matters shall be consolidated by rolling as directed by the engineer subject to a minimum of six passes of 8-10 tonnes roller.

- Excavated rock shall be laid (on original ground or after filling 300 mm thick layers of soil as specified), in layers not exceeding 1000 mm and rolled with with vibratory roller (10-15 tonnes static weight) with minimum six passes.

- Over the compacted layer of rock, soil shall be filled in horizontal layers not exceeding 300mm in compacted thickness. The soil shall be compacted as specified elsewhere.

- It shall be ensured that the top soil layer is in minimum 3 layers of 300 mm each. To achieve this the thickness and number of rockfill layers below can be suitably adjusted.

Contour map and spot levels of the area based on the preliminary survey carried out by Owner is enclosed for the purpose of guidance of Bidder. Refer tender drawing no. "4410-999-POC-F-001". However, Owner does not lake any responsibility about the accuracy of the survey details furnished and any variation of the said data shall not constitute a valid reason for changing the terms and conditions of the contract. Bidder is requested to carry out his independent assessment of the existing ground levels before furnishing his. bid Detailed survey shall be carried out by Bidder after award of work and all findings as stated earlier shall be submitted for Owner's review.

Before commencement of cutting/filling, all organic and vegetable matters like grass. Plants shrubs bushes, weeds, trees (with girth less than 30 cm measured at height of 1m above ground level) etc. in the areas to be filled, shall be completely removed along with their roots and disposed off. .It shall also be ensured that the area to be filled is clear of any water, slush etc. Original ground shall be compacted by rolling as directed by the Engineer subject to a minimum of six passes of 8 to 10 tonne roller The earth shall then be spread in horizontal layers not exceeding 300 mm in compacted thickness. Each layer shall be watered and compacted with proper moisture content and with such equipment as may by required to obtain a compaction of 95% or more of Standard Proctor's maximum dry density. The moisture content of the fill material shall be controlled to obtain near optimum moisture content during compaction.

The fill material shall be tested for determining optimum moisture content and maximum dry density by Standard Proctor Test as per IS : 2720 (Part-VII). The fill material shall also be tested for determining moisture content before compaction as per IS:2720 (Part-II) For each of the above tests, one sample for every 10,000 cubic metre of fill material shall be tested. Additional samples shall be tested, whenever there is a change in the source or type of fill material. The compacted soil shall be tested for its dry density as per IS2720 (Part-XXIX) or Part-XXVIII). Samples shall be taken at the rate of one sample for every 10,000 sq.m. area for each compacted layer. In addition random checks shall be carried out in compacted soils by means of Proctor needle penetration. Bidder shall submit to the Engineer, the test results immediately after completion of the tests. A sample shall be deemed to have passed the test when the in-situ dry density is equal to or more than the specified percentage of maximum dry density. If a sample taken from a layer fails to pass the test, the layer shall be further compacted till two samples

taken and tested from this layer pass without any negative deviation. Only after this. spreading of further layers shall be taken up.

Before start of filling, the Bidder shall submit to the Owner his proposal for the methodology to be adopted for compaction for each type of fill material. The Bidder shall also carry out compaction trials to establish the proposed methodology. The Bidder shall start the compaction work only after approval of the methodology by the Owner

The surface of the cut/filled up areas after reaching final level shall be dressed to the required levels and slopes. The difference in levels shall not be more than +/- 10cm
locally.

The borrow areas outside the overall plant boundary limits for obtaining suitable fill material which is required over and above the earth available after cutting high grounds within the plant area, for site levelling shall be arranged by the Bidder himself and all expenses in respect of royalties, taxes, duties, etc. for borrow areas/fill material shall be borne by him. He shall also obtain and submit to the Owner the necessary clearances/permission from the concerned authorities for the borrow areas/fill material.
Material suitable for filling shall be loaded and transported to the filling site by the Bidder.

Any coarse grained or fine grained low plastic soil, free from shingle, salts, organic matter, sod or any other foreign substances, may be used for filling. The Bidder shall test the fill material to establish its suitability and submit its results to the Owner. Fill material shall be approved by the Owner. The following types of materials shall not be used for filling:

a) Material from swamps, marshes and bogs.

b) Expansive clays

c) Peat, logs, stumps, sod and perishable materials.

d) Materials susceptible to combustion

e) Any material or industrial and domestic produce which will adversely affect other materials in the work.

f) Materials from prohibited areas

Bidder shall include in his offer any extra filling that may be required on account of subsidence of the original ground due to overburden of filling above and/or compaction works for site levelling.

After levelling, the contractor shall establish concrete pillars at the intersection points of the grid lines for future reference. These pillars shall project at least 450 mm above the formation level and shall be labelled permanently with their respective coordinates and reduced levels.

CLAUSE NO.	TECHNICAL REQUIREMENTS
	Filling upto the specified formation level shall extend at least 2.0m beyond the outside face of boundary wall/fence. Thereafter, it shall be finished at a suitable slope (not steeper than 1 Vertical:2 Horizontal) and provided with good quality dry stone pitching minimum 300mm thick for slope upto level difference of 3m. If the level difference is more than 3m, the stone pitching shall be provided with RCC bands with suitable design and benching.
11.00.00	**FENCING** Fencing with toe wall and steel gates shall be provided around the gypsum storage area , lime storage area , gypsum dewatering area , truck hopper and associated areas . Fencing shall comprise of PVC coated GI chain link fencing of minimum 8G (including PVC coating) of mesh size 75 mm and of height 2.4 m above the toe wall. The diameter of the steel wire for chain link fence (excluding PVC coating) shall not be less than 12G. All Fence posts shall be of 75 x 75 x 6 MS angles spaced at 2.5 m c/c distance. All corner posts will have two stay posts and every tenth post will have transverse stay post. Suitable R. C. C. foundation for the post and stays shall be provided based on prevailing soil conditions. Gates shall be sturdy with locking provisions. Toe walls of brick masonry shall be provided between fence posts all along the run of the fence with suitable foundation. Toe wall shall be minimum 200 mm above the formation level with 50 mm thick P. C. C. coping (1: 2. 4) and shall extend minimum 300 mm below the formation level. Toe wall shall be plastered on both sides and painted with two coats of cement paint of approved colour and shade. Toe wall shall be provided with weep holes at suitable spacing.
12.00.00	**ROADS** All roads shall be of rigid pavements unless otherwise specified. The design of rigid pavement shall be carried out as per IRC: 58. The effects of design wheel load, maximum tyre inflation pressures, tyre contact area for the vehicle, traffic loads, environmental factors such as temperature changes in the pavement, other factors, like impact, load repetitions, etc., are to be taken. Detailed plate load tests to determine the modulus of sub grade reaction “K” shall be carried out as per the procedure outlined in IS: 1888. The design traffic load shall be a minimum value of 4 million standard axles. The road shall be designed for 30 years of life and considering a minimum traffic growth rate of 1 per cent per annum. The concrete pavement for roads shall be minimum 250 mm thick slab. The road construction including its shoulders, base, sub base and concrete pavement shall be as per IRC standards. IRC: 58 shall be followed for the pavement design and IRC: 15 shall be followed for the construction of the concrete pavement. The road base shall be with minimum 150 mm thick dry lean concrete over granular sub base. Dry lean concrete shall be laid by a mechanical paver and compacted by vibratory rollers. Concrete pavement of the road shall be done with fully mechanized paver fitted with electronic sensors for construction techniques. Dry lean concrete

CLAUSE NO.	TECHNICAL REQUIREMENTS
	shall be minimum M10 grade and concrete pavement slab shall be minimum M35 grade concrete. The finished top (crest) of all roads shall be 350 mm above the surrounding finished ground level. The sub grade under all roads and its shoulders shall be compacted to achieve 95 per cent or more of Standard Proctor's Density MDD using mechanical means. Cutting / extending / rerouting / remaking of existing roads including associated works to maintain continuity of road system / network shall also be carried out. All culverts and RCC bridges at crossings of all roads / rail tracks / facilities with drains / nallahs / channels / roads / rail tracks / pipes / other facilities, etc. are to be designed and constructed. Unless otherwise specified, all roads shall be double lane roads. The road section should be as per drawing no. 4410-999-POC-F-001.
1□.00.00	**GATE ALONG BOUNDARY WALL:** The gates shall be provided at the entry and exit of truck movement road gates in Bidder's Scope are as identified in Drawing No.: 4410-999-POC-F-001. The gate shall comprise of two mild steel double panelled openable shutter of minimum 7.75 m clear width and minimum height of 3.0m from top of road. The gate shall be complete with fabricated hinges, MS aldrops with locking arrangement, tempered steel pivot, guide track of MS tee, bronze aluminum ball bearing, castor wheel etc. All gates shall be given anti-corrosive treatment in three coats. The structural steel shall confirm to IS: 2062 (latest) and all other relevant IS codes. Beside the each gate one room of size not less than 3m X 3m shall be provided for security guards. The room shall be made of brick/ RCC and with RCC roof. In addition to the room, one toilet block shall also be provided.
14.00.00	**LIME □ GYPSUM HANDLING AND ASSOCIATED BUILDINGS STORM WATER DRAINAGE SYSTEM** Storm water drain shall be designed taking into account the finished ground levels of the plant area, drainage pattern, intensity of rainfall, etc with a return period of 50 years. These values shall be based on rainfall intensity of 90mm/hr. All RCC drains shall be either RCC Cast-in-Situ or RCC Pre-cast drains. The minimum grade of concrete shall be M25 for RCC Cast-In-Situ drains and M30 for RCC Pre-cast drains. The maximum velocity for RCC open drains shall be limited to 1.8 metre per second. However, minimum velocity of 0.6 metre per second for self - cleansing shall be ensured. Bed slope not milder than 1 in 1000 shall be provided. Open RCC rectangular section, unless required otherwise due to functioned requirement, shall be provided for all drains. The thickness of side walls and bottom slab of RCC drains shall be minimum 150mm or as per design considerations

CLAUSE NO.	TECHNICAL REQUIREMENTS
	whichever is higher for drains upto depth of 1m from formation level. For depth of drain more than 1m from formation level, the thickness of side walls and bottom slab of RCC drains shall be minimum 200mm or as per design considerations whichever is higher. The drains shall be provided on both sides of roads .These shall be designed to drain the road surface as well as all the free and covered areas, etc. Box culverts shall be provided at all rail, road and other crossings. All drains inside the building shall have minimum 40 mm thick grating covers. In areas where heavy equipment loads would be coming, precast RCC covers shall be provided in place of steel grating. The invert levels of the in-plant and plant peripheral drains shall be kept such that water can be discharged by gravity to the main / trunk drains under all conditions. The invert levels of the drains shall be decided in such a way that the water can easily be discharged to the natural water bodies above the high flood.
1□.00.00	**SEWERAGE SYSTEM** The connection of sewer pipe line for the associated buildings of FGD and Lime and gypsum handling area to nearest owner's sewage network is in bidder's scope. Cement concrete pipes of class NP-3 as per IS:458 shall be used below ground level for sewage disposal in all areas . However, for pressure pipes and under roads spun C.I. pipes conforming to IS:1536 of required class shall be used. RCC manholes with CI cover shall be provided at every 30m along the length, at connection points, and at every change of alignment, gradient or diameter of a sewer pipeline. This shall be as per IS:4111. Sewage pump house shall be provided as per IS:4111.
1□.00.00	**LOADING**
1□.01.00	For consideration of loads on structures IS : 875 - 'Code of practice for structural safety of buildings' shall be followed. In addition to the dead load, live load, equipment load (including impact / vibration). Temperature loads etc. various loading conditions arising due to operation and maintenance of equipment shall be considered in the design. The structure and equipment shall also be designed for seismic loads as per the "Cr□□r□ □r E□r□□□□□ R□□□□□D□□□□ □□Sr□□□r□□ □□d □□□□□ □□□" and the "Cr□□r□ □r W□d R□□□□□□D□□□□ □□Sr□□□r□□ □□d □□□□□ □□□" specified in the "A□□□□r□-A□ and "A□□□□r□-B□ respectively in Civil Section, whichever is governing. Wind and seismic forces shall not be considered to act simultaneously. The following minimum live loads shall be adopted for the design of various structures. If actual expected load is more than the specified load, then actual load is to be considered.

CLAUSE NO.	TECHNICAL REQUIREMENTS	
	a) Roofs	150 Kgs. / Sq. M. for accessible roofs and 75 Kgs. / Sq. M. for non - accessible roofs. In addition to this dust load (Dead load) of 150 Kgs. / sq. m. on flat roofs & 75 Kgs. / sq. m. on inclined roofs shall also be considered.
	b) R. C. C. floors	500 Kgs. / Sq. M.
	c) Stair and balconies	500 Kgs. / Sq. M.
	d) Toilet rooms	200 Kgs. / Sq. M.
	e) Chequered plate floors	400 Kgs. / Sq. M.
	f) Walkways (including walkways in conveyor galleries)	300 Kgs. / Sq. M.
	g) Conveyor galleries	In addition to the live loads, loads due to cable trays, fire fighting / service water pipes shall also be considered @ 125 Kgs. / m (minimum) on each of the longitudinal girder. Roof-truss members are to be checked for supporting fire fighting pipes/ Service water pipes.
	h) Road Culverts and its allied structures including R. C. C. pipe crossing & road crossing of trenches.	For class 'AA' loading and checked for class A loading as per IRC standard.
	i) Channels / trenches	In addition to earth pressure and water pressure, etc. additional earth pressure due to surcharge of 2T / Sq. M. shall also be considered for design.
	j) Covers for trenches / channels	Covers for channels & trenches, shall be designed for a live load of 0.4T Sq. M. and loading as mentioned under clause in trenches, whichever is critical.
	k) Sumps and tanks and other underground basement type structures	In addition to earth pressure with a surcharge of 2T / Sq. M. (or surcharge due to Railway loading whichever is critical for Railway load bearing structures etc.) and sub - soil water pressure etc. These are also to be designed for the following conditions : i) Water / liquid inside and no earth outside (applicable only to such

CLAUSE NO.	TECHNICAL REQUIREMENTS
	structures which are liable to be filled up with water or any liquid). ii) Earth with surcharge outside and no water / liquid inside iii) For underground (basement) structures protection against buoyancy during execution and after execution shall be ensured without superimposed loadings with minimum factor of safety of 1.2 against buoyancy.
	If the erection load is higher than the specified live loads on any floor or part thereof, then the erection loads are to be considered for the design. Permissible increase in stresses of materials and bearing pressure of soil due to wind load or seismic load shall be as per relevant I. R. S. and I. S. code.
1□.02.00	**Cr□□□ □□d** For crane loads, an impact factor of 25% and lateral crane surge of 10% (of lifted weight + trolley weight) shall be considered in the analysis of frame according to the provisions of IS:875. The longitudinal crane surge shall be 5% of the static wheel load. Longitudinal surge and lateral surge shall not be considered to act simultaneously.
1□.0□.00	**T□□ □□r□□□r□ □□d** For temperature loading, the total temperature variation shall be considered as 2/3 of the average maximum annual variation in temperature. The average maximum annual variation in temperature for this purpose shall be taken as the difference between the mean of the daily minimum ambient temperature during the coldest month of the year and mean of daily maximum ambient temperature during the hottest month of the year. The structure shall be designed to withstand stresses due to 50% of the total temperature variation. Suitable expansion joints shall be provided in the longitudinal direction wherever necessary with provision of twin columns. The maximum distance of the expansion joint shall be as per the provisions of IS: 800 and IS: 456 for steel and concrete structures respectively.
1□.00.00	**DESIGN CRITERIA**
1□.01.00	The design of all R. C. C. structures shall be carried out as per 'code of practice for plain and reinforced concrete for general building construction', IS : 456 (latest).
1□.01.00	Design of steel structures shall be done by the Working stress method. Design shall be as per provisions of IS:800 :1984 and other relevant IS standards.
1□.02.00	Minimum size of the angle section to be used as structural members shall be 50 X 50 X 6. Minimum weld size shall be 6 mm. Connections shall be designed for 70 % of shear capacity of the member or the actual shear force, whichever is higher. The steel structures using tubular sections shall be designed and fabricated as per IS:806 – "Code of Practice for use of steel tubes in general building construction." and EN 1993-1-8:2005. Minimum grade of steel & thickness of Tubular/Hollow sections shall be Yst 240 Mpa & 4.0mm respectively

CLAUSE NO.	TECHNICAL REQUIREMENTS
1□.0□.00	The building shall conform to local bye - laws, rules and regulations for industrial buildings and also B. I. S. publications, SP 32 and 41.
1□.04.00	Slotted holes shall not be assumed to act as expansion joint for relieving of stresses and suitable bearings shall be provided at the supports.
1□.0□.00	Stresses for all structures shall be checked for the higher of the forces obtained from gust factor method and the peak wind speed method.
1□.0□.00	Horizontal bracing system shall be provided at floor levels around the openings.
1□.0□.00	Shear force in steel columns shall be transferred to the pedestals / foundations exclusively either through foundation bolts or the shear key arrangement.
1□.0□.00	For design of liquid retaining structures, IS : 3370 (Part - I to IV) (latest) shall be followed. Face of the structure in contact with liquid shall be designed as un - cracked section. For design of R. C. C. pipes for culverts, latest editions of IS : 458, IS : 783 should be followed.
1□.0□.00	For design of all underground structures / foundations, ground water table shall be assumed at the formation level (i. e. the adjoining ground level). For all underground structures like tunnel, underground transfer point and underground hopper etc. crack width shall be limited to 0.2mm.
1□.10.00	Design of masonry walls shall be made as per IS : 1905.
1□.11.00	Civil task drawing indicating various equipment loading and supporting arrangement and floor loads to be submitted along with the design calculation.
1□.12.00	Minimum 0.12% of reinforcement shall be provided on the top face of the foundation concrete on either direction and minimum percentage of reinforcement at bottom face of foundation shall be same as that stipulated for beam as per IS:456.
1□.1□.00	Foundations for all tanks shall be designed for as per IS: 803.
1□.14.00	Footings shall be so proportioned to as to minimise the differential settlement.
1□.1□.00	All gallery supporting trestles shall be so proportioned that the transverse deflection of gallery due to wind / seismic load should not exceed trestle height / 1000 as stipulated in IS: 11592. This deflection condition shall be strictly followed. Peak wind speed method shall be considered for checking the transverse deflection.
1□.1□.00	The crusher and transfer house structures shall be so designed that transverse deflection at places where conveyor galleries meet, should be equal to the respective transverse deflection of conveyor supporting trestles.
1□.1□.00	**D□□□□□□□□□ □r□□r□** The maximum Horizontal Deflection for various structures shall not exceed and be limited to the following:

Sl. No.	Description	Maximum value of
1.	For Trestles and transfer points (Transverse deflection at Conveyor gallery supporting level)	Height/1000 (For Wind load by Peak Wind Speed Method / Seismic Load)
2.	For other Buildings	Height/325

1□.1□.00

a) Permissible deflection (unless specified otherwise in this specification) for latticed framework and beams of floors other than drive floor shall be span/325.

b) The allowable deflection for beams directly supporting drive machinery shall be restricted to span/500 unless specified otherwise in this specification.

c) The deflection for manually operated cranes & monorail supporting beams shall not exceed span/500.

For electric overhead cranes :

1) upto 50 t capacity : span/750

2) over 50 t capacity : span/1000

d) The vertical deflection of metal deck sheet for roofing and side cladding shall be limited to span/250

e) The permissible vertical deflection for beams supporting drive machinery shall be restricted to span / 500 and for other beams it shall be within span / 325.

f) Permissible deflection for all purlins, cladding runners, roofing/cladding sheets and grating / chequered plates shall be span/250. However, the maximum vertical deflection of Grating/ Chequered plate shall be limited to 6 mm.

17.19.00

a) Dispersion of load in any direction through soil shall be as per IS: 8009 (relevant part).

b) Dispersion of load through concrete shall be considered at an angle of 45 degrees with horizontal from the edge of contact area.

17.20.00

a) The design and construction of RCC structures shall be carried out as per IS: 456. Working stress method shall be adopted for the design wherever specifically mentioned in this specification.

b) For design and construction of steel-concrete composite members, IS: 11384 shall be followed.

c) For reinforcement detailing, IS: 5525 and SP: 34 shall be followed.

d) Two layers of reinforcement (on both inner and outer faces) shall be provided for RCC wall sections having thickness 150 mm or more.

CLAUSE NO.	TECHNICAL REQUIREMENTS
17.21.00	a) All RCC liquid retaining/conveying shall be designed by working stress method as outlined in clause no. 4.5 of IS 3370 (Part-2) 2009 unless specified other wise. b) Water proofing treatment shall be provided for liquid retaining/ carrying structures and basement type structures (requiring dry working condition). Dense and durable concrete with water cement ratio not more than 0.45 shall be used. Plasticiser /super-plasticiser cum water proofing compound shall be added to the concrete. All the construction/expansion joints shall be provided with PVC water bar and/or chemical injection grouting as per IS:6494. As applicable internal/external surface of such structures shall be provided with acrylic based polymer modified cementitious composite coating system for critical structures. For liquid carrying/retaining structures, minimum two coats of such coating shall be applied. For external application wherever the surface is in contact with the earth, fine silica/quartz sand of 0.6 mm nominal size shall be added in the coating mix for better abrasion resistance and total nominal thickness of such coating shall be minimum 1.5 mm. For non critical structures minimum two coats of bitumen grade 85/25 as per IS:702, mixed with 1% of anti-stripping compound meeting the requirement of IS:6241, shall be applied. The total application of bitumen shall not be less than 1.7 kg/sq.m. Bidder shall submit a comprehensive scheme for water proofing treatment based on above or any other alternative scheme, internationally accepted for Employer's approval prior to commencement of work. c) All liquid retaining/carrying structures shall be tested for water tightness as per the provisions of IS: 3370 and IS: 6494 and in case of leakage, the same shall be rectified by chemical injection grouting through nozzles.
1□.22.00	For design of all underground structures, foundations, etc. ground water table shall be assumed at the finished ground level unless specified otherwise.
1□.2□.00	Earth pressure for all underground structures shall be calculated using coefficient of earth pressure at rest or co-efficient of active earth pressure, whichever is applicable, depending upon the structural configuration. However, for the design of substructure of pump houses, earth pressure at rest shall be considered. Co-efficient of passive earth pressure shall be used only in design of shear keys for stability against sliding.
1□.24.00	a) Following loading conditions shall be considered in addition to the loading from super structure for the design of substructure of pump house, channels, sumps, tanks, trenches and other underground structures containing liquid i) Water pressure from inside and no outside pressure, like earth pressure, ground water and surcharge pressure (applicable only to structures, which are liable to be filled up with water or any other liquid.) ii) Earth pressure, surcharge pressure and ground water pressure from outside and no water pressure from inside. iii) Design shall also be checked against buoyancy due to the ground water during construction as well as after construction stages. Minimum factor of safety of 1.2 against buoyancy shall be ensured considering empty condition inside and ignoring the superimposed loadings. Provision of pressure relief valves/flap valves, etc., shall not be permitted to counter the buoyancy unless specified otherwise. iv) Base slab and piers of the pump houses shall also be designed for the

CLAUSE NO.	TECHNICAL REQUIREMENTS
	condition of different combination of pump sumps being empty during maintenance stages with maximum ground water level. b) Intermediate dividing pier of pump sumps and partition wall (if applicable) in channel shall be designed considering water on one side only and other side being empty for maintenance. c) All pump houses and other substructures (wherever applicable) shall be checked for stability against sliding and overturning during construction as well as operating conditions for various combinations of loads.
1□.2□.00	**D□□□□□ □□B□□□ F□□□d□□□□**
	a) Block foundation resting on soil shall be analyzed using elastic half space theory. In case the foundation is supported over piles, Novak's approximation shall be used for determining the spring constant and damping ratio of pile groups. The mass of the RCC block shall be at least three times the mass of machine. Free vibration analysis of the foundation shall be carried out to evaluate the natural frequencies. The fundamental natural frequency shall be kept at least 20% away from the operating frequency (speed). Forced vibration analysis shall be carried out if the dynamic forces are made available by the machine supplier in which case the amplitude limits stipulated by the machine supplier and ISO 10816, whichever is lower, shall be satisfied. Reinforcement design shall be done by working stress method as per IS:456-2000 and IS:2974 (Part-IV). b) For the foundations supporting minor rotating equipment weighing less than one ton or if the mass of the rotating parts is less than one hundredth of the mass of the foundation, no dynamic analysis is necessary. However, if such minor equipment is to be supported on building structure, floors, etc., suitable vibration isolation shall be provided by means of springs, neoprene pads, etc., and such vibration isolation system shall be designed suitably.
1□.00.00	**C□□□□□□ □□ RCC □ □□□r r□□□□□□□ □□r□□□□r□□ (□□□□r □□□□ dr□□□□□ □ □□□r)** Epoxy phenolic coating shall be applied on internal surfaces of the RCC water retaining structures, as per details specified below: All concrete surfaces shall be provided with two component transparent polyamide cured epoxy sealer coating (having solid by volume minimum 40% ±2%) of minimum 50 micron DFT. Surface to be coated shall be absolutely dry, clean and dust free. Sealer coat shall be followed with the application of epoxy phenolic coating (solid by volume minimum 63%) of minimum 400 micron DFT. This coat shall be applied after an interval of minimum 24 hours (from the application of primer coat) by airless spray technique. **C□□□□□□ □□ RCC □ □□□r r□□□□□□□ □□r□□□□r□□ (dr□□□□□ □ □□□r)** Internal surfaces of RCC water retaining structures shall be provided with minimum 400 micron Food grade epoxy coating complying to FDA Title 21, Part 175.300. Surface to be coated shall be absolutely dry, clean and dust free
.	

CLAUSE NO.	TECHNICAL REQUIREMENTS
1□.00.00	**F□□r□□□□□□**
	All steel structures shall be fabricated in factory, transported and erected at site. All factory fabricated structures shall have bolted field connections. Chimney flue liners can either be fabricated at factory in segments, transported and welded at site before erection or fabricated at site. For Chimney flue liners, to prevent flue gas leakages, the applicable field joints shall necessarily be welded.
20.00.00	**E□□□r□d□□**
20.01.00	The electrodes used for welding shall be of suitable type and size depending upon specifications of the parent material, the method of welding, the position of welding and quality of welds desired. Only low hydrogen electrodes shall be used for welding of medium / high tensile steel and for mild steel plate thickness above 20 mm.
20.02.00	All low hydrogen electrodes shall be baked and stored before use as per manufacturer's recommendation. The electrodes shall be re-baked at 250°C - 300°C for one hour and later on cooled in the same oven to 100° C. It shall be transferred to a holding oven maintained at 60°C - 70°C. The electrodes shall be drawn from this oven for use.
20.03.00	Where coated electrodes are used they shall meet the requirements of IS: 814 and relevant ASME - Sec. II. Covering shall be heavy to withstand normal conditions of handling and storage.
20.04.00	Only those electrodes that give radiographic quality welds shall be used for welds, which are subjected to radiographic testing.
20.05.00	Where bare electrodes are used these shall correspond to specification of the parent material. The type of flux-wire combination for submerged arc welding shall conform to the requirements of F-60 class of AWSA-5-17-69 and IS: 3613. The electrodes shall be stored properly and the flux shall be baked before use in an oven in accordance with the manufacturer's requirements as stipulated.
20.06.00	The contractor shall take specific approval of the weld for the various electrodes proposed to be used on the works before any welding is started.
20.0□.00	**Ed□□ Pr□□□r□□□□□ □□r W□□d□□□**
	Suitable edge as per weld joint detail shall be prepared either by machines or by automatic gas cutting. All edges cut by flame shall be ground before they are welded.
20.0□.00	**Pr□ H□□□□□□ □□d P□□□H□□□□□**
	Mild steel and medium / high tensile steel plates thicker than 20mm, will require Pre-Heating of the parent plate prior to welding as mentioned in Table - 1 for mild steel and Table - 2 for medium / high tensile steel, however, higher pre heat temperature may be required as per approved welding procedure and it shall be followed. In welding materials of unequal thickness, the thicker part shall be taken for this purpose. Base metal shall be preheated, not withstanding provisions of IS: 9595 to the temperature given in Table - 1 for mild steel and Table - 2 for medium / high tensile

steel, prior to welding or tack welding. When base metal not otherwise required to be pre heated is at a temperature below 0°C it shall be pre heated to atleast 20°C., prior to tack welding or welding. Pre heating shall bring the surface of the base metal to the specified pre heat and this temperature shall be maintained as minimum inter-pass temperature welding is in progress.

TABLE - 1
MINIMUM PREHEAT AND INTERPASS TEMPERATURE FOR WELDING MILD STEEL

Thickness of Part	Welding Using Low Hydrogen Electrodes	Other Welding Processes
Upto and including 20mm	None	None
Over 20mm and up to and including 40mm	20°C	Not allowed
Over 40mm and up to and including 63mm	66°C	Not allowed
Over 63mm	110°C	Not allowed

Note: Type of electrode and the preheating requirements for welding shall be as per approved welding procedure.

TABLE - 2
MINIMUM PREHEAT AND INTERPASS TEMPERATURE FOR WELDING MEDIUM HIGH TENSILE STEEL

Thickness of Part	Welding Using Low Hydrogen Electrodes	Other Welding Processes
Upto and including 20mm	None	Not Allowed
Over 20mm	120oC - 140°C	Not Allowed

Note : Type of electrode and the preheating requirements for welding of medium and high tensile steel shall be as per approved welding procedure.

20.09.00 Pre heating may be applied by external flame which is non-carbonizing like LPG, by electric resistance or electric induction process such that uniform heating of the surface extending up to a distance of four times the thickness of the plate on either side of the welded joint is obtained.

CLAUSE NO.	TECHNICAL REQUIREMENTS
20.10.00	Thermo-chalk, thermo-couple or other approved methods shall be used for measuring the plate temperature.
20.11.00	All butt welds with plates thicker than 50mm and all site butt welds of main framing beam supporting the bunker shall require post weld heat treatment as per procedure given in AWS D-1.1. Post heating shall be done up to 600oC and rate of application shall be 200oC per hour.
20.12.00	The post heat temperature shall be maintained for 60 minutes per 2.5cm thickness. For maintaining slow and uniform cooling, asbestos pads shall be used for covering the heated areas.
21.00.00	**P□□□□□□Dr□□□□□□ □□d S□□ □□□**
	RCC paving of minimum 150 mm thick with M25 grade concrete, over an underbed as specified herein shall be provided. RCC paving shall be designed as rigid reinforced concrete pavement for the crane/ vehicular/ equipment movement loads which the paving has to bear. The under bed for paving shall consist of preparation and consolidation of sub-grade to the required level, laying of stone soling of 200mm compacted thick for normal duty paving with 63 mm and down aggregate with interstices filled with selected moorum followed by 75 mm thick 1:4:8 PCC (1 part cement, 4 parts sand and 8 parts stone aggregate) with 40 mm nominal size aggregate. Paving areas shall be provided with the metallic hardener floor finish as specified elsewhere in the specification. 2.5 m wide paving with metallic hardener around periphery of all sumps and underground tanks shall be provided. Suitable drains shall be provided to dispose off storm water as well as floor wash of the FGD area block. The paving shall be provided with slope of 1:500 to dispose the surface water/wash water to the nearest drain. Sewer lines (Cast Iron), interconnected by sewer manholes (RCC) at regular intervals (not exceeding 30 meter centre to centre) shall be provided to dispose off sewage from FGD area to the nearest available manhole of the owner. The plant storm water drainage shall be designed taking into account the finished grade levels of the plant area, drainage pattern, intensity of rainfall, etc., The storm water drainage shall cater to storm water run off resulting from one hour rainfall intensity, with a return period of 50 years. The value of minimum rainfall intensity shall be taken as 75mm/hr. The maximum velocity for pipe drains and open drains shall be limited to 2.4m/sec and 1.8 m/sec. respectively. However, minimum velocity of 0.6m/sec. for self-cleansing shall be ensured. Bed slope not milder than 1 in 1000 shall be provided. The open drains shall be open rectangular drains of RCC unless required otherwise due to functional requirement. RC box culverts shall be provided at rail, road or other crossings. Sewers shall be designed for a minimum self-cleansing velocity of 0.75m/sec and the maximum velocity shall not exceed 2.4m/sec.

CLAUSE NO.	TECHNICAL REQUIREMENTS
22.00.00	**S□□□□r□ R□□□r□□ □□□**
	Bidder shall comply with all the applicable statutory rules pertaining to Factories Act, Fire Safety Rules at Tariff Advisory Committee. Water Act for pollution control, Explosives Act, etc.
	Provisions of safety, health and welfare according to Factories Act shall be complied with. These shall include provision of continuous walkways along the crane - girder level on both sides of building, comfortable approach to EOT crane cabin, railing, fire escape, locker room for workmen, pantry, toilets, rest room etc.
	Provisions for fire proof doors, number of staircases, fire separation wall, lath plastering/encasing the structural members (in fire prone areas), type of glazing etc. shall be made according to the recommendations of Tarrif Advisory Committee.
	Statutory clearances and norms of State Pollution Control Board shall be followed.
	Bidder shall obtain approval of Civil/Architectural drawings from concerned authorities before taking up the construction work.
2□.00.00	**INSPECTION□TESTING AND QUALITY CONTROL**
	Sampling and testing of major items of civil works viz. earthwork, concreting, structural steel work (including welding), piling, sheeting, etc. shall be carried out in accordance with the requirements of this specification. Wherever nothing is specified relevant Indian Standards shall be followed. In absence of Indian Standard equivalent International Standards may be used.
	The Bidder shall submit and finalise a detailed field Quality Assurance Programme before starting of the construction work according to the requirement of this specification. This shall include frequency of sampling and testing, nature/type of test, method of test, setting of a testing laboratory, arrangement of testing apparatus/equipment, deployment of qualified/experienced manpower, preparation of format for record, Field Quality Plan, etc. Tests shall be done in the field and/or at a laboratory approved by the Engineer. The Bidder shall furnish the test certificate from the manufacturer's of various materials to be used in the construction.
24.00.00	**CONCRETE**
	All R. C. C. works to the done under this specification, unless specified otherwise shall be design mix concrete. Minimum grade of concrete for various structures shall be as follows:
	a) M25 - For all underground / sub-structural/ super-structure R. C. C. work.
	b) M30- For Block Foundation
	c) M35- For spring supported RCC deck

CLAUSE NO.	TECHNICAL REQUIREMENTS
	Minimum 75 mm thick P.C.C M-7.5 shall be provided as mud mat below all foundations. For concreting of underground structures requiring water tightness, plasticizer cum water proofing admixture shall be added to the concrete mix. Both coarse and fine aggregates shall conform to IS: 383 for concrete, shotcreting etc. unless otherwise mentioned.
25.00.00	**E**xcavation, **B**ackfilling, **D**isposal an **d S**tacking of mate rials **D**etails
25.01.00	**E**xcavation in **S**oil Excavation for foundation shall be to the bottom of lean concrete and as shown on drawing or as directed by the Engineer. The bottom of all excavations shall be trimmed to required levels and when excavation is carried below such levels by error, it shall be brought back to the specified level by filling with concrete of nominal mix 1 : 3 : 6 (cement: coarse sand: 40 mm down aggregates), as directed by the Engineer. The Contractor shall ascertain for himself the nature of materials to be excavated and the difficulties, if any, likely to be encountered in executing this work. Cofferdams, sheet piling, shoring, bracing to maintain suitable slopes, draining etc. shall be provided and installed by the contractor, to the satisfaction of the Engineer. Surplus excavated materials shall be disposed off by the contractor at locations up to a lead of 5 kms from the plant boundary wall as directed by the engineer. The Contractor shall have to constantly pump out any water collected in excavated pits and other areas due to rain water, springs etc. and maintain dry working conditions at all times until the excavation, placement of reinforcement, shuttering, concreting, Backfilling is completed. The Contractor shall remove all slush/muck from the excavated areas to keep the work area dry. The Contractor, if required, shall employ sludge pumps, for this purpose. For other details, excavation clauses as given at Annexure-C of this specification, are to be referred.
25.02.00	**E**xcavation in **R**ock For the work of excavation in rock, Contractor shall engage specialised agency having experience of excavation in rock involving wedging and blasting. The agency shall be subject to approval of Engineer and the Contractor shall furnish details of relevant experience in support while seeking approval for the agency. Blasting shall be resorted to only with the written permission of the Engineer. All the statutory laws, (Explosives Act etc.) rules, regulations, Indian Standards etc. pertaining to the acquisition, transport, storage, handling and use of explosives etc. shall be strictly followed.

CLAUSE NO.	TECHNICAL REQUIREMENTS
	The contractor shall obtain Licenses from Competent Authorities for undertaking blasting work as well as for procuring, transporting to site and storing the explosives as per Explosives Act. The Contractor shall be responsible for the safe transport, use, custody and proper accounting of the explosive materials. Surplus excavated materials shall be disposed off by the contractor at locations up to a lead of 5 kms from the plant boundary wall as directed by the engineer. The Contractor shall have to constantly pump out any water collected in excavated pits and other areas due to rain water, springs etc. and maintain dry working conditions at all times until the excavation, placement of reinforcement, shuttering, concreting, backfilling is completed. For other details forexcavation in rock, clauses as given at Annexure-C of this specification, are to be referred.
2□.0□.00	**B□□□□□□□□□□D□□□□□□□□□d S□□□□□□ □□□ □□r□□□** Backfilled earth shall be compacted as per “Foundation system and Geotechnical Data Chapter” given at Annexure-C of this specification. However, the backfill under the rail lines and roads shall be compacted to minimum 95 % of the standard proctor density at OMC unless otherwise stated by rail Authorities. The contractor is required to excavate upto any depth as shown on the drawings or as directed by the Engineer. Lifting of excavated materials shall be done either by manual or mechanical or both means if called for by the Engineer. The disposal / stacking areas for excavated materials shall be indicated by the Engineer. The carriage of excavated materials shall be done by the methods mentioned below: The excavated materials shall be carried beyond the initial lead of 50 m but upto 500 m by manual / animal labour or by mechanical means. If directed by the Engineer this material shall be used directly for filling purposes. For leads exceeding 500 m the Contractor shall transport the excavated materials by mechanical means only and as directed by the Engineer. The Contractor may be allowed to carry materials through Kuccha roads. Providing and maintaining of the Kuccha roads shall be the responsibility of the Contractor. The transported material shall be neatly stacked as directed by the Engineer. Some excavated materials required for filling purposes, may have to be carried upto a lead of 500 m and stacked as per instructions of the Engineer. Excavated materials carried beyond 500 m shall normally be for disposal purpose only. Double handling of materials shall be avoided as far as possible. However, depending on site condition excavated materials carried beyond a lead of 500 m may also be required to be brought back for filling purpose. Materials to be used for filling purpose shall be stone, sand or other inorganic materials and they shall be clean and free from shingle, salts, organic matter, large roots and excessive amount of sod, lumps, concrete or any other foreign substances which could harm or impair the strength of the substances in any manner. All clods

shall be suitably broken to small pieces. When the material is mostly rock boulders, these shall be broken into pieces not larger than 150 mm size before backfilling and shall be backfilled in layers of 300mm interstices filled with sand. In case of broken rock boulders used for back filling, the top cover shall be with 1.0m thick soil. The layers of rock boulders, interstices filled with sand shall be compacted by plate vibrators. Sand used for filling shall be clean, medium grained and free from impurities. Fines less than 75 microns shall not be more than 20%. In any case, the materials to be used for filling purposes shall have the prior written approval of the Engineer.

In case the materials have to be brought from pits / quarries, then it shall be the Contractor's responsibility for identification of such quarry areas, obtaining approval from their use from concerned authorities, excavation / quarrying loading and carriage of such material, unloading and filling at specified locations. The Contractor shall pay any fees, royalties etc. that may have to be pain for utilisation of borrow areas.

2□.00.00 GAL□ANISING

All burrs and irregular edges of the structural steel members to be galvanised shall be ground smooth before galvanising.

Purity of Zinc to be used for galvanising shall be 99.5 % as per IS : 209 (latest edition).

The weight of the zinc coating shall be at least 610 Gms. / m^2 unless noted otherwise.

2□.00.00 CHEMICAL IN□ECTION GROUTING

Minimum, 12 mm dia (NB) threaded nozzle of suitable length, shall be provided over the surface and along the construction joint line in a grid pattern at a spacing not exceeding 1.5 m c / c before concreting operation. Adequate precaution shall be taken to keep the nozzles plugged at both ends to prevent them from getting closed by concrete.

For fixing of any nozzle in set concrete suitable size hole shall be drilled, preferably by using repercussive hammer drill electrically operated, in grid pattern and grouting nozzle shall be fixed in these holes.

After the nozzles are fully set, neat cement slurry admixed with water soluble non - shrink polymer / monomer based chemical shall be injected through the net - work of nozzles with low pressure grout pumps at a pressure of about 2.0 Kgs. / cm^2. Cement slurry shall be prepared by mixing cement with non-shrink polymer/monomer @ 500 gm/50 kg bag of cement and water, ensuring that Water: Cement ratio does not exceed 2 (by weight). Wetter the structure, lesser should be the water cement ratio. The property of the polymer/monomer should be such that when it is mixed with water @0.5% by weight of water, the viscosity of the resultant solution (water and polymer/monomer) should not be more than 1.2 centipoises. Plasticizing agent shall be added wherever required. The grouting shall be started at very low pressure and increased gradually to a required pressure. The grouting shall continue, till the hole refuses to take any further grout, even at an increased pressure. Applied pressure

CLAUSE NO.	TECHNICAL REQUIREMENTS
	shall not be more than the designed strength of the concrete. After completion of grouting operation, the nozzles shall be sealed properly to the satisfaction of the Engineer.
2□.00.00	**POLYMER MODIFIED CEMENTITIOUS COATING**
2□.01.00	**M□□□r□□□□**
	Modified liquid polymer blend shall be a dispersion containing 100 % acrylic based polymer solids. Polymer shall be mixed in the ratio of 1 cement: 0.5 polymer (for minimum solid content of polymer 30%).
	Portland cement based dry powder.
	Clean, fine specially prepared quartz sand approximately 0.6 mm size.
2□.02.00	**M□□□□□**
	The liquid polymer shall be stirred well and cement based powder shall then be added slowly to make a Slurry Mix. For preparation of Brush Topping Mix, quartz sand shall be added slowly and mixed well till a homogeneous mixture is obtained. The mix shall be used within half an hour of the preparation. Addition of quartz sand may not be necessary, in case dry power contains the same.
2□.0□.00	**Pr□□□r□□□□ □□C□□□□□**
	It must adhere to wet surface.
	It should develop adequate bond strength, with the concrete surface, not less than 2 N / Sq. mm.
	Co - efficient of permeability shall be about $5x10^{-10}$ Cm / Sec.
	Water absorption after continuous soaking shall not be more than 1 %.
	The materials shall be permeable under water vapour.
	The material shall be resistant to acids and alkalies present in the soil and underground water with normal pH value between 4 and 14.
	The co - efficient of thermal expansion of the material shall be close to that of concrete.
2□.04.00	**A□□□□□□□□□**
	The concrete surface shall be cleaned and made free from grease, oils or loosely adhered particles. The surface shall be damp without any free water. For exterior underground part, application (b) pertaining to Brush topping Mix shall be followed.

CLAUSE NO.	TECHNICAL REQUIREMENTS
	(□) F□r S□□rr□ M□□
	A minimum of 2 coats shall be applied on the surface. The first coat being applied, when the surface is still damp and left to harden for 4 to 6 hours. After 4 to 6 hours of the application of second coat, it shall be finished by rubbing down with a soft dry sponge. The coverage shall not be less than 1 : 1 Kgs. / m^2 in the 2 coats. A lap of 75 mm shall be provided at the joints.
	The coating shall be air dried for 4 to 6 hours and, thereafter, cured for 7 days after the application of last coat.
	(□) F□r Br□□□ T□□□□□□□ M□□
	This shall be applied in two coats. A primary coat of slurry mix can also be first applied on the surface as first coat. After the coating has dried up, a coat of Brush Topping Mix shall be applied over it with a push broom or any other similar brush. It shall be left in broom finished condition. The nominal thickness shall be 1.5 mm and minimum thickness shall be 1.0 mm. A lap of 75 mm shall be provided at the joints. It shall be ensured that no pinhole exists and rebrushing shall be done to cover the pinholes, if any.
	The Coating shall be air dried for 4 to 6 hours and thereafter cured for 7 days after the application of last coat.
	Rate of application of coating shall be established to achieve the required thickness.
2□.00.00	**Ar□□□□□□□r□□C□□□□□□**
	Buildings shall be architecturally treated in such a way that it presents a pleasing composition of mass and void with suitable and functionally designed projections and recesses. The overall impact of the building shall be one of aesthetically unified architectural composition having a comprehensive scale, blending with the surroundings and taking full consideration of the climatic conditions and the building orientation. All the buildings shall be architecturally treated in such a way so as to be in harmony with the surroundings. The over all composition may have straight or curvilinear profiles.
	Necessary projections, fins, parapets, chajjas etc. in addition to the minimum area specified elsewhere in this specification shall be provided as required.
	Nothing extra shall be payable for any changes required while getting the drawings / scheme approved and for executing the same.
	All structures, buildings and facilities shall be designed as per provisions of National Building Code 2005 and Local building by - laws as applicable including provisions of the Factories Act of the State concerned, with regard to requirement of free access, stairs, minimum head room, walkways, ventilation, toilets etc. and safety requirements like railings, fire escapes etc. Further all layouts and detailed drawings shall meet the relevant statutory requirements specified in recommendations of Petroleum act, Explosives act and Indian Electricity rules' as applicable.

CLAUSE NO.	TECHNICAL REQUIREMENTS
2□.01.00	**FINISHING SCHEDULE**
2□.01.01	**F□□□r□□□** The nominal total thickness of floor finish shall be 50mm i.e. underbed & topping. The floor shall be laid on an already laid and matured concrete base. Flooring of tiles / stone shall be fixed with 18 mm thk cement sand mortar 1:4, above PCC under bed (M 20 (with graded aggregate of nominal size 12.5mm) design mix) Flooring of Concrete hardener topping shall be provided above the PCC underbed (M 20 (with graded aggregate of nominal size 12.5mm) design mix).
2□.01.02	Wherever specified Heavy duty ceramic tiles of size 300x300x7 mm thick (minimum) of reputed manufacturer (Kajaria, Orient, Johnson or equivalent) of approved finish shade and colour to be used. Vitrified ceramic tiles wherever specified shall be 600x600 mm with minimum 9.5 mm thickness and of reputed manufacturer (Kajaria, Johnson, Orient or equivalent).
2□.02.00	**F□□□r □□□□□□ □ □□□r□□□□:** The nominal thickness of floor finish shall be 50 mm. Floors of toilets, pantries / kitchen shall be finished with Heavy duty (grade-5) dust pressed ceramic tiles 300mmx300mm x7 mm thick as per IS:15622, including pointing the joints with white cement mixed with matching pigment, of approved make, size & colour shade. (1) Floors of Office Room, Labs, Control Rooms, RIO Rooms and all other A/c Room shall be finished with Mirror polished Vitrified ceramic tiles (minimum 9.5 mm thk) with 3 mm groove joints as per approved pattern, pointed neatly with 3X4mm stainless epoxy grout SP- 100 of Laticrete or approved equivalent in approved colour to match colour of tile. (2) Suitable supporting arrangement shall be provided with M.S. angles / channels on cable trenches in MCC and Control rooms for mounting Control panels / MCC. (3) In rest of the areas, IPS (Cement concrete flooring) with Concrete hardener topping shall be 12mm thick with ordinary grey cement using uniformly graded, properly treated iron particles shall be provided. (4) Floors and sides of under ground RCC structures like valve pits, trenches and tanks shall have simultaneous (integral) neat cement finish at the time of concreting. (5) The interconnecting walkway between various structures, buildings and facilities shall be finished with 22 mm chequered concrete tiles at top. 1000 mm wide walkway of 22mm thick chequered concrete tiles shall be provided on terrace for maintenance purpose, in all RCC /Metal deck roof buildings. (6) Skirting in general shall be 150mm high, Dado in toilet, kitchen & pantry shall be up to specified height (up to 2200 mm for toilets, up to 600 mm high above counter top in kitchen and pantry area). The dado height shall be measured from finished floor level. Skirting and Dado shall match with the floor finish.

CLAUSE NO.	TECHNICAL REQUIREMENTS
	(7) Battery Room shall be provided with Acid resistant tile on horizontal and vertical surfaces, at all levels for all type of works, including One coat of bitumen primer followed by 12 mm thick bituminastic layer, 20 mm thick Acid Resistant tiles, 6 mm thick under-bed by potassium silicate mortar, 6 mm thick pointing of joints of tiles with acid/alkali resistant epoxy/furane mortar up to a depth of 20 mm and bituminastic end sealing. 1200 mm high dado on wall shall be with 12 mm thk Acid resistant tiles of the similar finish and the joints to be finished as per flooring tiles, with the rest of wall height and ceiling finished in chemical resistant paint (chlorinated rubber based). (8) Well polished 18 mm thick Kota stone jointed with neat cement slurry mixed with pigment to match the shade of the stone including rubbing and cleaning, complete, to be provided in entrance area, entrance steps, Entrance area, staircases (tread, riser, landings, skirting).
2□.0□.00	Sunken RCC slab shall be provided in false flooring area and toilet, Kitchen and pantry, so as to keep the finished floor level of these areas same as that of the surrounding area.
2□.04.00	Water proofing treatment to be provided on sunken portion of all vertical and horizontal surfaces of depressed portions of all toilets, W.C., kitchen, Pantry and the like consisting of : (i) Ist course of applying cement slurry @ 4.4 kg/sq.m mixed with water proofing compound conforming to IS 2645 in recommended proportions including rounding off junction of vertical and horizontal surface. (ii) IInd course of 20 mm cement plaster 1:3 (1 cement: 3 coarse sand) mixed with water proofing compound in recommended proportion including rounding off junction of vertical and horizontal surface. (iii) IIIrd course of applying blown or residual bitumen applied hot at 1.7 kg. per sq.m of area. (iv) IVth course of 400 micron thick PVC sheet. (Overlaps at joints of PVC sheet should be 100 mm wide and pasted to each other with bitumen @ 1.7 kg/sq.m).
2□.0□.00	**A□d □A□□□R□□□□□□Tr□□□ □□:** Acid / alkali resistant lining treatment shall be provided in different areas as follows: Neutralization Pit: The walls shall be provided with one coat of bitumen primer, followed by 18 mm thick bitumastic layer, 115 mm thick A.R. bricks, 6 mm thick under bed of potassium silicate mortar, pointing the joints of bricks with acid / alkali resistant epoxy / furane mortar upto a depth of 20 mm and bitumastic end sealing. Suitable plasters shall be provided with A.R. bricks at regular intervals depending upon the height of lining, as per the specification.

CLAUSE NO.	TECHNICAL REQUIREMENTS
	The floor of neutralization pit shall be provided with acid / alkali resistant lining treatment as given in the above para, except that the 115 mm thick A.R.tile layer shall be replaced by 75 mm thick A.R. tile layer and pilasters shall be omitted. The ceiling of neutralization pit shall be provided with one coat of epoxy primer followed by 2 coats of epoxy paint (150 micron). Acid / Alkali storage area / projections above the floor, pedestals projecting from the floor / saddles. : The floor shall be provided with one coat of bitumen primer followed by 12 mm thick bitumastic layer, 20 mm thick A.R. tiles, 6 mm thick under - bed by potassium silicate mortar, 6mm thick pointing of joints of tiles with acid / alkali resistant epoxy / furane mortar up to a depth of 20 mm and bitumastic end sealing. Dado of 12 mm thk Acid Resistant tiles up to 1.0M high shall also be provided if applicable in case of walls nearby. Alum/Lime Storage area and first floor of Chemical House : One coat of bitumen primer followed by 12mm thick bitumastic layer, 20 mm thick A.R. tiles, 6 mm thick underbed of potassium silicate mortar, 6mm thick pointing of joints of tiles with acid /alkali resistant epoxy /furane mortar up to a depth of 20 mm and bitumastic end sealing. Alum solution preparation tank: The wall shall be provided with one coat of bitumen primer followed by 12 mm thick bitumastic layer, 75 mm thick A.R. tiles, 6 mm thick underbed by potassium silicate mortar, pointing of joints of tiles with acid / alkali resistant epoxy / furane mortar upto a depth of 20 mm and bitumastic end sealing. The floor shall be provided with acid / alkali resistant lining treatment as given in the above para except that the 75 mm thick A.R. tile layer shall be replaced by 12 mm thick A.R. tile layer. Basket of Alum solution preparation tank: 5 mm thick epoxy lining over a coat of epoxy primer. Curved surfaces of saddles shall have minimum 12 MM thick bitumastic layer to support the vessel / tanks. Effluent Drains: Acid Resistant lining treatment indicated for the storage area shall be provided on the bed as well as walls of the drains with 38 MM AR tiles. The underside of the pre-cast slab cover shall be applied with one coat of epoxy primer and two coats of epoxy coating, total DFT 150 microns. Lime tank: Two coats of bitumen paint conforming to IS: 9862, with total DFT 150 microns.
2□.0□.00	**W□□□**
2□.0□.01	All walls shall be non-load bearing infilled panel walls. All external walls shall be minimum one brick thick masonry wall.
2□.0□.02	All external and internal walls shall be with minimum one brick masonry (230 or 250 mm) including toilet walls. Toilet partition low height walls shall be minimum half brick masonry.
2□.0□.0□	For all air conditioned areas/ rooms, wherever metal cladding is envisaged as cladding material, additional brick masonry wall (230m thick) shall also be provided in

CLAUSE NO.	TECHNICAL REQUIREMENTS
	addition to metal cladding for effective air conditioning. This brick wall shall be plastered & painted as specified elsewhere in the specification.
2□.0□.04	RCC transoms and mullions of size 115x115mm with suitable reinforcement shall be provided wherever necessary to reinforce the brickwork.
2□.0□.0□	50 mm thick DPC in Cement concrete (M-20) with water proofing compound followed by two layers of bitumen coating 85/ 25 grade as per IS: 702 @ 1.7 kg/ sq.m. shall be provided at plinth level before starting the masonry work.
2□.0□.0□	The bricks shall be laid with cement mortar (1:6) for one brick thick walls and (1:4) for half brick thick walls IS: 1905, IS: 2212 and SP -- 20 shall be followed for brick work design and construction.
2□.0□.00	**P□□□□r□□□**
2□.0□.01	External (rough) surface of walls shall be plastered with 18 mm thick cement plaster, consisting first (base) layer of 12 mm thick plaster in cement sand mortar (1:6) and second (finishing) layer of 6 mm thick plaster in cement sand mortar (1:4). The internal (smooth) surface of walls shall have 12 mm thick plaster in cement sand mortar (1:6). All external / internal RCC surfaces including RCC parapet walls shall be provided with minimum 12mm thick plaster in cement sand mortar (1:4) except walls of underground structures like cable trenches / valve pits etc.
2□.0□.02	All exposed faces of R.C.C. walls of structures, buildings and facilities shall have minimum 12 mm thick cement sand plaster 1:6.
2□.0□.0□	All RCC ceilings (except areas provided with false ceilings and cable vault ceiling) shall be provided with 6 mm thick cement sand plaster 1:4.
2□.0□.04	All plastering work shall conform to IS: 1661.
2□.0□.00	**P□□□□□□**
2□.0□.01	All painting on masonry or concrete surface shall preferably be applied by roller. If Applied by brush then same shall be finished off with roller.
2□.0□.02	All paints shall be of approved make including chemical resistant chlorinated rubber paint.
2□.0□.0□	Minimum two finishing coats of paint shall be applied over a coat of primer.
2□.0□.04	The thinner shall not be used with textured paint (Sandtex Matt or equivalent) finish.
2□.0□.00	**I□□□r□□□F□□□□** All Air conditioned areas shall have 2mm of polymer based water resistant putty (wall putty) to given an even and smooth surface.
2□.0□.01	Acrylic emulsion paint shall be as per IS: 5411 (Part - 1). Acrylic distemper shall be as per IS: 428. Air - conditioned areas shall be applied with minimum 2 coats of acrylic emulsion paint. All other areas shall be applied with minimum 2 coats of Acrylic distemper.
2□.0□.02	Toilet, Pantry / Kitchen areas shall have dado with Designer ceramic tiles, 300x200mw (matt finish) upto 2.2 m height and shall match with floor finish. Above dado, Acrylic distemper shall be applied.

CLAUSE NO.	TECHNICAL REQUIREMENTS
2□.0□.0□	Areas coming in contact with chlorine fumes or acid / alkali shall have two coats of acid / alkali resistant chlorinated rubber paint over suitable primer on walls above dado & ceiling. The paint shall be of approved colour shade and make.
2□.10.00	**E□□□r□□□W□□□F□□□□□** One pack, ready mix and ready to use, resin / polymer bonded granular textured coating finish of 2.5 mm (natural coloured graded stone chips), of approved colour, and shade for all types of plastered and / or exposed concrete surface, in all kinds of works, at all levels, including preparation of surface, preparation of working drawing, labour, material, equipment, handling, transportation, mixing, laying, applying finishing, testing, curing, making grooves, scaffolding, staging, etc., all complete, as per specifications, drawings and instructions of the Engineer-in-charge. Toe wall of chain link fencing shall be provided with two coats of Acrylic Smooth Exterior Paint The finish shall be of approved colour shade and make.
2□.11.00	**C□□□□□□ F□□□□□** Ceiling shall have min. two (2) coats of Acrylic distemper except AC areas & Battery room.
2□.11.01	For painting on concrete, masonry and plastered & surface, IS: 2395 shall be followed. For painting on steel work and ferrous metals, IS: 1477 shall be followed.
2□.11.02	Fire resistant transparent paint (confirming to IS: 162) shall be provided on all wood work, over French police or flat oil paint. French polish shall confirm to IS : 348. Flat oil paint shall confirm to IS: 1237.
2□.12.00	**D□□r□□W□□d□□ □□□□□□□□□r□□L□□□□r□□R□□□□□ S□□□□r□ □ G□□□□□**
2□.12.01	Adequate Doors, Windows, Louvers and Ventilators shall be provided for proper lighting and ventilation of all buildings. The area of windows shall be at least 10% of the floor area of the respective building. In addition to the above, wherever room height is more than 3.5 m, a band of ventilators of 600 mm height (minimum) shall be provided at the top.
2□.12.02	Unless specified all doors, of air conditioned areas, entrance lobby of all buildings shall have electro colour coated (anodised) aluminium frame work with glazing. Windows, ventilators & partitions of all buildings shall have electro colour coated (anodised) aluminium frame work with glazing. All doors of toilet, kitchen, pantry & store areas shall be of factory made pre - laminated solid core flush door shutters, as per IS: 2202 (Part-II) with pressed steel door frame. Control room shall have Aluminium glazed door & partitions. All other doors (unless otherwise specified) shall be of steel.
2□.12.0□	All steel doors shall consist of double plate flush door shutters. The door shutter shall be 45 mm thick with two outer sheets of 18 G rigidly connected with continuous vertical 20 G stiffeners at the rate of 150 mm centre to centre. Side, top and bottom edges of shutters shall be reinforced by continuous pressed steel channel with minimum 18 G. The door shall be sound deadened by filling the inside void with mineral wool. Doors shall be complete with all hardware and fixtures like door closer, tower bolts, handles, stoppers, aldrops, etc.

CLAUSE NO.	TECHNICAL REQUIREMENTS
2□.12.04	Wherever functionally required, rolling shutters of suitable size approved by the Owner, with suitable operating arrangement manual/ electric shall be provided to facilitate smooth operations. Rolling shutters shall conform to IS: 6248.
2□.12.0□	All windows and ventilators at ground floor level shall be provided with suitable anodised aluminum grill.
2□.12.0□	Fire proof doors with panic devices shall be provided at all fire exit points as per the requirements. However minimum Fire rating shall be 2 hours. These doors shall be double cover plated type with mineral wool insulation.
2□.12.0□	Hollow excluded Section of minimum 2 mm wall thickness as manufactured by INDAL, Jindal, Hindalco or equivalent shall be used for all Aluminium doors, windows, ventilators and Partitions.
2□.12.0□	The doors, Windows & ventilators frame shall be of suitable size & thickness for fixing the glazing. The Glazing thickness shall be minimum 6 mm thk clear toughened glass for all glazed doors, windows, ventilators & partitions. Windows in air conditioned areas shall be provided with 24mm thick hermetically sealed composite double glazing.
2□.12.0□	Doors and windows on external walls shall be provided with sunshade over the openings with width 600 mm more than the opening width. The projection from the finished face of the wall for sunshade shall generally be 450 mm over window openings, 750 mm over door openings and 900 over Rolling shutters, or as decided and approved by the Engineer.
2□.12.10	Float glass or flat transparent sheet glass shall conform to IS: 2835.
2□.12.11	All glazing work shall conform to IS: 3548.
2□.12.12	Windows in conveyor gallery shall be provided with welded wire fabric of 1.6mm thick wire as per IS: 4948 and 12mm x 30mm mesh size.
□0.00.00	**WATER SUPPLY□DRAINAGE AND SANITATION**
□0.01.00	Polyethylene water storage tank conforming to IS: 12701 shall be provided (for the use of toilet, pantry and kitchen) over the roof, with adequate capacity depending on the number of users and 8 hours requirement complete with all fittings including float valve, stop cock etc. The capacity of tank shall be calculated minimum 500 liters, per toilet, pantry and kitchen
□0.02.00	Galvanised MS pipe of medium class conforming to IS: 1239 shall be used for internal piping works for potable water supply.
□0.0□.00	Sand C.I. pipes with lead joints conforming to IS: 1729 shall be used for sanitary works above ground level.
□0.04.00	The facilities provided in the toilet block shall depend on the number of users. However, minimum facilities to be provided shall be as stipulated below. IS: 1172 shall be followed for working out the basic requirements for water supply, drainage and sanitation. In addition, IS: 2064 and IS: 2065 shall be also be followed.
□0.0□.00	Each toilet block shall have the following minimum facilities. Unless specified all the fittings shall be of chromium plated brass (fancy type). The common toilet area shall have finished floor level at 15 mm below the finished floor level of surrounding area. Following minimum fittings & fixtures together with associated plumbing works shall be provided as specified below.

S□. N□.	T□□□ □□ F□□□□□ □F□□□r□□	G□□□ T□□□□
i)	1 no wall mounted coloured glazed vitreous china European water closet with flush valve.	1 No.
ii)	Coloured glazed vitreous china flat back lipped urinals with photo voltaic controlled automatic flushing system including all requisite fittings and fixtures	1
Iii)	Wash Basin (oval shape) with photo voltaic control system and all requisite fittings and fixtures to be fixed on concrete platform finished with 18mm thick first grade polished granite stone	1 No.
iv)	Wall to wall mirror minimum 450 mm high (minimum 6mm thick float glass) including all fittings	1 No.
v)	Stainless steel Towel Rail 600mm Long x 20 mm dia.	1 No.
vi)	Stainless steel Liquid soap holder cum dispenser with requisite fittings.	1 No.
vii)	Overhead Drinking water storage tank (Minimum 500 Litres capacity)- High density polyethylene (cylindrical/vertical) molded seamless type.	1
viii)	Overhead Service water storage tank (Minimum 500 Litres capacity)- High density polyethylene (cylindrical/vertical) molded seamless type	1 No.

One No. drinking water connection with C.P. brass valve for fixing water cooler by Owner.

Required plumbing work from Owner's service water terminal point to the service water tank and from tank to the toilet accessories mentioned above.

Required plumbing work from Owner's potable water terminal point to the drinking water tank and from tank up to the water coolers.

Janitor room. Adequate space shall be provided.

Provision for installation of water cooler.

□0.0□.00 All structures, buildings, facilities, liquid storage tanks shall be provided with peripheral surface brick drains of all around periphery and suitably connected to nearest Owner's drain. Overflow and drains from storage tanks shall be laid to and suitably connected to Owner's open surface drains.

□0.0□.00 The sewerage and waste water disposal system shall consist of providing all associated plumbing and underground pipe works together with all fittings and fixtures and inclusive of ancillary works such as connections, manholes and inspection chambers, including connection to Owner's nearest main sewer line or as directed by Engineer. If required, R.C.C. septic tank and soak pit of required capacity shall be provided by the Bidder.

□0.0□.00 Miscellaneous Architectural Items

(a.) In all buildings suitable arrangement with provision of floor traps for draining the water collected from leakage, floor washing, fire fighting etc. shall be provided on all floors which shall be connected to rain water down comers.

CLAUSE NO.	TECHNICAL REQUIREMENTS
	(b.) Wherever required minimum 1000 high hand railing with 32 NB M.S. pipes medium class as per IS : 1239 shall be provided, with toe & knee rail and toe guard plate, around all floor / roof openings, around periphery of Neutralisation Pit, projections of balconies, walkways, platforms, steel staircase etc. (c.) However for RCC staircases in structures, buildings and facilities, railings with 20 mm square MS bar balustrades with suitable anti corrosive paint of approved colour MS flats for knee & toe guard with 50mm Ø NB MS pipe hand rail at top shall be provided. (d.) All air conditioned areas / common corridors shall be provided with false ceiling constructed from 15 mm mineral Fibre Board in tile form of 600x600mm with supporting system as per manufacture guidelines. 50 mm thick mineral wool insulation (conforming to IS : 8183) shall be provided with as under deck insulation). Additional hangers and height adjustment clips shall be provided for return air grills, light fixtures, Air conditioning ducts etc. Minimum headroom below false ceiling shall be 3.0 m. (e.) Under - deck insulation shall be provided on the ceiling (underside of roof slab) and underside of floor slab of air - conditioned areas depending upon the functional / air - conditioning requirements. The under - deck insulation shall consist of 50 mm thick mineral wool insulation conforming to IS : 8183 backed with 0.05 mm thick aluminium foil & 24 G x 25 mm mesh wire netting and shall be fixed to ceiling with 24 G wire ties and suitable fixing arrangements. (f.) Parapets, chajjas, window / door heads, architectural facias, fins etc., shall be provided with drip course in cement mortar (1 : 3). (g.) 150mm thick fillets at junction of roof slab / chajja slab and parapet / vertical walls shall be provided with cast - in - situ cement concrete 1 : 2 : 4 nominal mix, followed by 12 mm thick cement sand plaster (1 : 4). (h.) Suitable provision shall be made for fixing of ceiling fans in office areas of different structures, buildings and facilities.
□**1.00.00**	**CORROSION PROTECTION**
31.01.00	GENERAL (a) All Steel structures shall be provided with painting as given in the specification. Further, painting system shall also meet the requirements of Corrosivity category C3 (durability High) as per ISO 12944. Painting system for steel surfaces embedded in Concrete is given separately. (b) All Painting shall be done as per technical specification. Painting scheme shall be submitted by the bidder for approval of employer. (c) All steel structures shall be designed by following basic design criteria in ISO 12944 Part 3. However, where it is not feasible to follow the design criteria given in ISO 12944 Part 3 where the steel surface are inaccessible for application of protective coating, corrosion allowance of 1.5 mm shall be kept in thickness(over the design thickness) of structural steel members. d) Painting scheme shall be resubmitted by the Bidder for approval of employer.
31.02.00	PAINTING OF STEEL SURFACES EMBEDDED IN CONCRETE:

CLAUSE NO.	TECHNICAL REQUIREMENTS

a) For the portion of Steel surfaces embedded in Concrete, the surface shall be prepared by Manual Cleaning and provided with Primer Coat of Chlorinated Rubber based Zinc Phosphate Primer of Minimum 50 Micron Dry Film Thickness (DFT).

b) All threaded and other surfaces of foundation bolts and its materials, insulation pins, Anchor channels, sleeves, etc. shall be coated with temporary rust preventive fluid and during execution of civil works, the dried film of coating shall be removed using organic solvents.

31.03.00 PAINTING OF STEEL SURFACES (OTHER THAN THOSE EMBEDDED IN CONCRETE)

a) All steel surfaces shall be provided with two component moisture curing zinc (ethyl) silicate primer coat (having minimum 80% of metallic Zinc content in dry film, solid by volume minimum 60% ±2%) of minimum 70 micron DFT to be applied over blast cleaned surface conforming to Sa 2 ½ finish of ISO 8501-1 with surface profile 40-60 Micron. The primer coat shall be applied in shop immediately after blast cleaning by airless spray technique. Zinc dust composition and properties shall be Type-II as per ASTM D520-00.

b) Primer coat shall be followed with the application of Intermediate coat of two component polyamide cured epoxy with MIO Content (containing lamellar MIO minimum 30% on pigment, solid by volume minimum 80% ±2%) of minimum 100 micron DFT. This coat shall be applied in shop after an interval of minimum 24 hours (from the application of primer coat) by airless spray technique.

c) Intermediate coat shall be followed with the application of finish coat of two-pack aliphatic Isocyanate cured acrylic finish paint (solid by volume minimum 55% ±2%) with Gloss retention (SSPC Paint Spec No 36, ASTM D 4587, D 2244, D 523) of Level 2 (after minimum 1000 hours exposure, Gloss loss less than 30 and colour change less than 2.0 ΔE) and minimum 70 micron DFT. This coat shall be applied shop after an interval of minimum 10 hours and within six (6) months (from the completion of Intermediate coat), Colour and shade of the coat shall be as approved by the Employer.

Notes:

1. For Primer, high quality surface preparation is necessary and good amount of moisture is required for proper curing. Below 70 % relative humidity, curing time may go up to 7 days or more. In such a case additional water sprinkling may be ensured for completion of curing. Additionally Inorganic zinc silicate cannot be recoated; even with itself. Typically it should be used when coating bare steel surface for first time.
2. The most frequent problem associated when top coating Primer is bubbling/pin holing especially with non-weathered zinc silicate coatings. To a great extent, this bubbling of finish paint can be eliminated by applying a mist coat of intermediate/topcoat as the first pass of the product, allow the bubbles to subside and then apply a full coat, as required.
3. In case top coating of zinc silicate with epoxy/polyurethane coatings, is expected to be delayed, it is advisable to use a suitable tie coat to avoid formation of white rust. However, if white rust forms then clean the surface with high pressure water, dry and apply the subsequent coats as required.
4. Touch up paintings on damaged areas: Surface preparation by manual tools, wire brush/ emery paper etc. Minimum 6 inches peripheral area, adjoining to damaged area to be covered. If metal surface is exposed, it is to be painted

CLAUSE NO.	TECHNICAL REQUIREMENTS
	with Zinc rich epoxy (70 micron) or suitable primer with existing paint scheme. If primer is intact, intermediate & top coat to be done with specified DFT in scheme.
31.04.00	**COATING FOR MILD STEEL PARTS IN CONTACT WITH WATER.** a) All mild Steel parts coming in contact with water or water vapour shall be hot dip galvanised. The Minimum Coating of Zinc shall be 610 Gms / Sq. M. for galvanised Structures and shall comply with IS: 4759 and other relevant Codes. Galvanising shall be checked and tested in accordance with IS: 2629. b) The galvanising shall be followed by the application of an etching Primer and dipping in black bitumen in accordance with BS: 3416, unless otherwise specified.
31.05.00	**Gr**atings All gratings shall be blast cleaned to Sa 2 ½ finish or cleaned by acid pickling as per ISO 8501-1 and shall be hot dip galvanized at the rate of 610 Gms / Sq. M.
31.06.00	**H□□d R**ailings an **d L□dd□r□** All Mild steel handrails and ladders shall be galvanised at the rate of 610 Gms / Sq. as per IS: 4736. However, Stainless steel handrails shall be provided as specified in General Architectural Specification clause 9.0.0.
31.07.00	**S**ea **W**o**r**thiness All Steel Sections and fabricated Structures, which are required to be transported on sea, shall be provided with anti corrosive Paint before shipment to take care of sea worthiness.
31.08.00	**F□r R**einfo **r**ce **d C**onc **r**ete **W□r□.** i) The protection for concrete sub-structure shall be provided based on aggressiveness of the soil, chemical analysis of soil/sub-soil water and presence of harmful chemicals/salts. ii) The protection to super structure shall depend on exposure condition and degree of atmospheric corrosion. This shall require use of dense and durable concrete, control of water cement ratio, increase in clear cover, use of special type of cement and reinforcement, etc., coating of concrete surface, etc., Bidder shall furnish the details of corrosion protection measures.
32.00.00	**M**iscellaneous
32.01.00	Ordinary form work shall be used in roofs and floor slabs in transfer houses, footings, pedestals, cable trenches, pits etc., Plywood form work shall be used for all over ground exposed work like columns, beams, floors and ceilings in control room and M. C. C. buildings.
32.02.00	Monorail girders and fixtures shall be provided for monorails at the locations as required and as described elsewhere in these specifications or drawings. Monorail openings in the walls shall be provided with steel frame doors preferably sliding type or otherwise open able inside, access platforms and ladders.

CLAUSE NO.	TECHNICAL REQUIREMENTS
□2.0□.00	Steel frame around openings in roof and on external walls for mounting of exhaust fans shall be provided.
□2.04.00	Ready mix non - shrink cementitious grout of reputed manufacturer as approved by the Employer shall be used for grouting of block outs and foundation bolts, underpinning of base plates and machine bases. Crushing strength of grout shall be one grade higher than the foundation concrete. Minimum crushing strength shall be 30 N / mm^2 unless higher strength requirement is specified by the equipment supplier or the grout manufacturers.
□2.0□.00	The bottom of steel in case of cable / pipe galleries and trestles shall be generally 3m above the ground except for rail / road crossing where it shall be 8m above the rail top / road crest/ground. Further in bunker areas it shall be 8 m above the ground.
□2.0□.00	Polysulphide Sealing Compound shall be two-part polysulphide sealant and shall be from approved manufacturer, conforming to IS : 12118. Materials shall consist of polysulphide polymer and a curing agent. Gun grade material shall be used unless otherwise specified. The application of the sealant shall be strictly followed as per manufacturer's guidelines.
□□.00.00	**SHOTCRETING**
□□.01.00	**G□□□r□□R□□□□r□□ □□□**
□□.01.01	Generally, shotcreting shall be done in accordance with IS : 9012.
□□.01.02	Reinforcement for shotcreting shall be as detailed below, unless specified otherwise. Reinforcement in one direction consisting of 6 mm M. S. bars at 750 mm c / c shall be connected to the lugs for fastening of the wire fabric. This shall be used in case of 50 mm or above thick shotcreting.
□□.01.0□	Wire fabric conforming to IS : 1566 shall be used as reinforcement and shall consist of wire, 3 mm diameter, spaced 50 mm both ways and shall be electrically cross welded. Wire fabric shall be securely tied to 6 mm bars for 50 mm thickness. Adjacent sheet of wire fabric shall be lapped at least 100 mm and tied.
□□.01.04	Clear cover to reinforcement mesh shall not be less than 15 mm.
□□.01.0□	Minimum thickness of shotcreting shall be 50 mm. for abrasion resistant work and 25 mm for ordinary surface protection work.
□□.02.00	**M□□□r□□□** Generally, the materials shall be in accordance with aggregates specification given hereunder.
□□.02.01	Fine aggregate shall consist of natural sand or crushed stone from a known source and shall be strong, hard, coarse, sharp, chemically inert, clean and free from any coating. It shall be free from clay, coal or coal residue, organic or any other impurities that may impair the strength or durability of the concrete and shall conform to IS : 383.

CLAUSE NO.	TECHNICAL REQUIREMENTS
33.02.02	Fine aggregate (Sand) shall be well graded and particles shall range in size within the following limits. The Engineer, may approved the use of any other grading as per requirement or as per IS : 9012.
33.02.03	The fineness modulus shall be preferably between 2.5 and 3.3. Any other value can be used, with prior approval of the Engineer.
33.03.00	**A**pplication
33.03.01	After the placement of reinforcement and / or welded mesh and not more than six hours prior to the application of shotcrete, the surface shall be thoroughly cleaned of all loose materials and dirt. The Contractor shall properly prepare the surfaces, reinforcement and / or welded mesh to receive the shotcrete. Cleaned surfaces shall be wetted not more than hour prior to shotcreting.
33.03.02	The mix as placed on surface shall be one part cement to three parts approved sand by mass. Cement and sand shall be dry mixed; not water shall be added after mixing and before using in the gun. The quantity of water when added shall be only that which is sufficient to hydrate the cement. For average atmospheric conditions, the water cement ratio for shotcrete in place shall be between 0.35 and 0.5 by mass. Suitable admixture shall be used wherever required.
33.03.03	A uniform pressure of not less than 3 Kg/cm^2 at the nozzle shall be maintained. Necessary adjustments shall be made to ensure this pressure, taking into account the length of hose and height of the place to be shotcreted, above location of the machine.
33.03.04	The application shall proceed in an upward direction. Beams, stiffeners and intermediate walls, if any, shall be wrapped with wire fabric and completely covered with shotcreting. All rebound shall be removed from the area of application as the work progresses and such rebound material shall not be reused.
33.03.05	As soon as the freshly shotcreted surface shows the first dry patches, a fine spray of water shall be applied to keep too moist. After the surface has hardened, it shall be kept continuously moist for minimum seven days. If there is extreme heat, especially when accompanied by hot winds, the shotcreted surface, immediately upon completion, shall be covered with burlap or similar covering, which must be kept continuously moist for 14 days after shotcreting. The temperature of the lining shall not be permitted to exceed 38^{0}C during placing of concrete.
34.00.00	**IBRATION ISOLATION SYSTEM** These specifications are meant for the design, supply and erection of vibration isolation system for supporting crushers.
34.01.00	**S**uppo **r**ting **Arr**angement
34.01.01	**F r Cr**ushe rs**:** The crushers shall be supported on vibration isolation system consisting of steel helical springs and viscous dampers. The supporting arrangement for each crusher shall consist of an R. C. C. deck supported on steel helical spring units and viscous

damper units which in turn shall be supported on girders. The girders shall be an integral part of the crusher house building.

The part of the structure consisting of the R. C. C. deck, springs and viscous dampers shall hitherto be referred to as “spring supported foundation”. The part of the structure, which is below the spring shall hitherto be called “supporting structure”.

□4.01.02 The Contractor should do the Engineering / design, supply and erection of vibration isolation system consisting of steel helical spring units and viscous dampers supporting the top deck which in turn would support the crushers. The vibrations isolation system supplied shall be of a proven make. The Contractor or his sub - contractor who designs and supplies the system should have designed, supplied and installed such systems for not less than five machines of speeds and unbalance forces comparable to the machine proposed by the vendor. The vibration isolation systems installed by the contractor or his sub - contractor in such machines should have been working satisfactorily for at least five years.

□4.02.00 **S□□□□ □□W□r□**

□4.02.01 Scope of work shall include the following :

(a.) Engineering

(1.) Design of the vibration isolation system using steel helical springs and viscous dampers to support an R. C. C. top deck supporting the equipment. This includes the static and dynamic analysis of the vibration isolation system with the R. C. C. top deck and the equipment.

(2.) Structural design of the R. C. C. top deck including preparation of General Arrangement drawings, detailed reinforcement drawings, bar - bending schedules etc.

(3.) Calculation of loads on the structure supporting the springs and viscous dampers, their points of application and the stiffness requirements of the supporting structure.

(4.) Drawings showing embedments and their locations and details on the R. C. C. top deck.

(5.) Drawings showing blockouts, recesses etc. on the top deck.

(6.) Design of the supporting structure, including preparation of detailed drawings and bill of materials.

(□.) **S□□□□□ □□□□d□□ □□□□□□□ □□d □r□□□□□r□□□□□ □□ □□□**

(1.) Steel helical spring units and viscous dampers, including associated auxiliaries for installation of the spring units and dampers like steel shims, adhesive pads etc.

(2.) Frame (s) for pre-stressing of spring elements.

(3.) Suitable hydraulic jacks system including electric pumps, high pressure tubes etc. required for the installation, alignment etc. of the spring units, two extra hydraulic jacks, one hand operated pump and spares for the hydraulic jack system as required.

(□.) Er□□□□□□ □□d C□□ □ □□□□□□□□

(1.) Complete erection and commissioning of the vibration isolation system including :

(2.) Pre-stressing of spring elements, placing of spring elements in position, checking clearances on the shuttering of the R. C. C. top deck, construction of the supporting structure and the R. C. C. top deck, releasing to pre-stress in spring elements and making final adjustments and alignments after machine installation etc.

(3.) The scope of work shall be deemed to include all activities which may not have been explicitly mentioned but are reasonably implied for the successful completion of the work for which these specifications are intended.

(4.) This part of the specifications is for vibration isolation system. For the construction of the supporting structure for the crusher and the top deck, the relevant parts of the specification should be referred to.

(d.) D□□□□ □□□□□□

(1.) Submission of detailed design calculation, analysis (static and dynamic) and drawings for Employer's acceptance and approval.

(2.) Furnishing methodology of providing shuttering and its removal as well as concreting of deck slab, installation of springs and dampers and the sequence of operation.

(3.) Furnishing installation and maintenance manual indicating equipment, procedure etc., necessary for installation, maintenance of vibration isolation system.

(4.) Furnishing a check list for confirming the readiness of the civil fronts for the installation of vibration isolation system and equipment required at each stage installation.

(5.) Bill of materials of various elements such as springs, visco-dampers, with their rating, stiffness etc., included in supply.

(6.) Detailed specifications of the vibration isolation system and various items included in the supply and the standard (local or international) to which they conform.

(7.) Proposed erection strategy of the entire system.

CLAUSE NO.	TECHNICAL REQUIREMENTS
4.0.00	**D[illegible] R[illegible] [illegible] Cr[illegible] F[illegible]**
4.0.01	**D[illegible] A[illegible]** Detailed dynamic analysis shall be done for the top deck together with springs and dampers and the natural frequencies and amplitudes of vibration shall be determined. A mathematical model of the top deck shall be formulated with three - dimensional beam / plate finite elements for the purpose of analysis with the spring idealised with vertical and horizontal stiffnesses. The mass of the machine together with that of the top deck shall be considered for the analysis. Natural frequencies upto at least 10 % above the operating speed shall be determined and these frequencies shall be checked against the design criteria. Forced response dynamic analysis shall be carried out for the operating condition unbalance forces using a sinusoidal forcing function. Unbalance forces as given by this specifications shall be used for his purpose. The amplitudes shall be checked against the design criteria. The dynamic forces from this analysis shall be used for structural design with a suitable fatigue factor.
4.0.02	**I[illegible] E[illegible]** The vibration isolation system shall be designed for about 90 % isolation efficiency.
4.0.0	**D-[illegible]** A ratio of the least 10 (ten) shall be ensured between the stiffness of the supporting structure and the stiffness of the spring system in the vertical direction to achieve de-coupling between the two (the stiffness of the spring system being lower). This ensures that dynamic analysis of the supporting structure need not be carried out.
4.0.04	**Fr[illegible] Cr[illegible]** The frequency criterion has already been laid down implicitly by the isolation efficiency criteria and de-coupling required. The first bending mode frequency of the top deck shall be at least 20 % above the operating speed.
4.0.0	**U[illegible] F[illegible] Cr[illegible]** Unbalance forces arising out of all the following cases shall be considered for checking the design and amplitudes. (a.) Balance quality grade Q 40 as per VDI 2060 - 1966. (b.) One hammer broken condition. The missing hammer shall be assumed to be closest to the crusher non - drive end of the crusher.

CLAUSE NO.	TECHNICAL REQUIREMENTS
	(c.) Three hammers broken condition. All the three hammers broken shall be assumed to be from the same suspension bar and located at the non - drive end of the crusher.
4.0.0	**A[illegible]d Cr[illegible]r[illegible] [illegible]r Cr[illegible]r**
	The calculated amplitudes (mean to peak values) shall not exceed following limits under the specified conditions. 1) Operating speed of 750 RPM (a.) 150 microns for an unbalance force arising out of balance quality grade Q 40 as per VDI 2060 - 1966. (b.) 300 microns in case of a one hammer broken condition. (c.) Amplitudes need not be checked for a three hammer broken condition. 2) Operating speed of 450 RPM (a.) 200 microns for an imbalance force arising out of balance quality grade Q-40 as per VDI -2060-1966. (b.) 400 microns in case of a one hammers broken condition. (c.) Amplitude need not be checked for a three hammer broken condition. For intermediate operating speed between 450 to 750 RPM the amplitude limits can be linearly interpolated. The amplitude limits mentioned above are in both vertical and horizontal directions. The amplitudes shall be calculated at critical points on the top surface of the R. C. C. deck. The amplitudes shall be checked for the most unfavorable superposition of modes in any direction. However, phase difference between the maximum amplitude occurring in different directions due to the rotating vetor may be considered while superimposing the modes.
4.0.0	**U[illegible]r[illegible]d A[illegible]d Cr[illegible]r**
	The unbalance forces and amplitude criteria shall be as per the equipment manufacturer's recommendations or as per VDI 2060/ VDI 2056, whichever is more stringent.
4.0.0	**Tr[illegible]R[illegible]**
	Transient resonance, which may occur during the start - up or coasting down condition of the crusher, shall be checked, and the amplitudes in such a condition should not exceed one - and - half times those at operating speed for each design condition.

□4.04.00 S□r□□□□□ Cr□□r□□

The following criteria shall apply for the design of top deck :

(a.) Dead loads, live loads, Seismic loads and dynamic loads shall be considered for the design. The most unfavorable combination shall considered for design.

(b.) Seismic loads shall be assumed to act together with dynamic loads for a one millimeter eccentricity in the rotor. However, seismic loads and dynamic loads arising out of hammer breakage need not be considered together

(c.) Fatigue shall be considered while designing for dynamic forces. A fatigue factor of 2.0 shall be used on all dynamic forces to arrive at the equivalent static force for the purpose of design.

(d.) Working stress method shall be used for the design of R. C. C. deck. In survival condition, 10 % overstressing may be permitted.

(e.) The R. C. C. top deck shall be at least of M35 grade of concrete as per IS : 456.

(f.) Fatigue need not be considered for the three hammer broken condition.

(g.) For calculating unbalance forces, the heaviest hammer (plain or toothed) shall be considered.

□4.0□.00 A□□r□□□□□□D□□□□□□ □□d Dr□□ □□□□

All design calculation, drawings and documents shall be in English. All design calculations and drawings shall be submitted to Employer for approval. However, approval of such designs and drawings shall not relieve the contractor of his responsibility regarding the adequacy of the foundation to carry the design forces.

□4.0□.00 S□□□d□rd□

Latest revisions of the following Codes shall be used for the design of the crusher foundations.

(a.) IS : 456 Code of Practice for Plain and Reinforced concrete.

(b.) IS : 2974 (Part IV) Code of Practice for Design and Construction of Machine Foundations (Part IV) for rotary type machine of low frequency.

(c.) IS : 1893 (Criteria for Earthquake Resistant Design of Structures).

(d.) DIN 4024 Machine Foundations :

Flexible supporting structures for machines with rotating masses.

(e.) DIN 2089

CLAUSE NO.	TECHNICAL REQUIREMENTS
	Helical Compression Springs out of round wire and rod; calculation and Design. (f.) DIN 2096 Helical Compression Springs out of round wire and rod; quality requirements for hot formed compression springs. (g.) VDI 2056 - Criteria for assessing mechanical vibrations of machines. (h.) VDI 2060 - Criteria for assessing the state of balance of rotating rigid bodies.not be permitted to exceed 38°C during placing and curing
□□.00.00	**P□□□□□□□□ □□d Tr□□□□□r□□□□□.**
	All the equipment shall be suitably protected coated, covered or boxed and crated to prevent damage or deterioration during transit, handling and storage at site till the time of erection. While packing all the materials the limitations from the point of view of availability of railway wagon sizes in India should be taken into account. The contractor shall be responsible for any loss or damage during transportation, handling and storage due to improper packing.
□□.00.00	**P□□□□L□□□**
	The plant shall be designed for a minimum operating life of 30 years under the conditions of operation. Assurance shall be given that plant components are adequate for this lifetime. If there are any exceptional items of the plant on which an assurance of meeting this clause cannot be given, life of such components and the difficulties associated with them shall be stated.
□□.00.00	**PTFE (P□□□ T□r□ F□□r□□□□□□□□□) B□r□□**
	The bearing shall be of reputed make and manufacturer as approved by the Engineer, for required vertical load and end displacement/rotation. PTFE bearing shall be sliding against highly polished stainless steel and the coefficient of friction between them shall be less than 0.06 at 55 kg/sq.cm. In order to prevent cold flow in PTFE surface it shall be rigidly bonded by a special high temperature resistance adhesive to the stainless steel substrata. The stainless steel surface that slides against the PTFE is mirror polished. The stainless steel shall be bonded to the top plate by special high strength adhesive. The thickness of stainless steel plate shall be between 1.0 mm to 1.5 mm.
□□.00.00	**TESTS FOR MATERIAL □WORKMANSHIP**
	All tests required for all materials, quality of workmanship or any other tests as desired by the Engineer shall be at contractor's cost.

□□.00.00 MATERIALS

□□.01.00 F□r C□□□□S□r□□□□r□□□□d Ar□□□□□□□r□□□ □r□□

Employer will not supply any material. All materials including cement, reinforcement steel and structural steel, whatsoever required for execution and completion of the entire scope of work covered under this specification shall be arranged by the contractor at his own cost. All materials procured by the contractor shall meet the quality requirements specified in this specification.

The contractor shall keep sufficient stock of cement and steel at site at any point of time when the work is in progress excluding what has been already incorporated in the works, so that any disruption / delay in availability of these materials during procurement will not affect the progress of work at site. The minimum quantity of such materials in stock at site shall not be less then the Requirement of one (1) month in case of Cement and Requirement of two (2) Consecutive months in case of Steel.

□□.02.00 S□r□□□□r□□□□□□□

Structural Steel (including embedded Steel) shall be straight, sound, free from twists, cracks, flaw, laminations and all other defects. Structural steel shall comprise of mild steel, medium strength steel and high tensile steel as specified below.

□□.02.01 M□d S□□□□

a) Rolled sections shall be of grade designation E250, Quality A/BR, Semi-killed/ killed conforming to IS 2062. All steel plates shall be of Grade designation E250, Quality BR (fully killed), conforming to IS 2062 and shall be tested for impact resistance at room temperature. Plates beyond 12mm thickness and up to 40mm thickness shall be normalized rolled. Plates beyond 40mm thickness shall be vacuum degassed & furnace normalised and shall also be 100% ultrasonically tested as per ASTM –A578 level B-S2.

b) Pipes shall conform to IS 1161.

c) Hollow (square and rectangular) steel sections shall be hot formed conforming to IS: 4923 and shall be of minimum Grade Yst 240.

d) Chequered plate shall conform to IS 3502 and shall be minimum 6 mm thick excluding projection. Steel for chequered plate shall conform to grade E250A semi killed of IS: 2062 or equivalent grade conforming to ASTM & BS standards only.

□□.02.02 M□d□□□ □□d H□□□ T□□□□□□ S□□□□

Rolled Sections and plates shall be of grade designation E350 or higher, Quality B0 (Fully killed), conforming to IS 2062. Plates beyond 12mm thickness and up to 40mm thickness shall be normalized rolled. Plates beyond 40mm thickness shall be vacuum degassed & furnace normalised and shall also be 100% ultrasonically tested as per ASTM –A578 level B-S2.

□□.0□.00 Fly ash based Portland pozzolona cement conforming to IS: 1489 Part - I shall preferably be used. However, the contractor may use other types of cements conforming to IS: 269, IS: 8112, IS: 12269, & IS: 455.

CLAUSE NO.	TECHNICAL REQUIREMENTS

□□.04.00 **R□□□□r□□□ □□□□□□□□□□□□□□□□r□ □□:**

a) Mild steel bars of grade I of IS: 432 Part – I or grade A of IS: 2062.

b) High yield strength deformed TMT steel bars of grade Fe-500 having minimum elongation of 14.5 % or Fe-500D, and conforming to other requirements of IS 1786.

40.00.00 **CODES AND STANDARDS**

All standards, specifications, acts and code of practice referred to herein shall be the latest editions including all applicable official amendments and revisions. Other Indian, foreign Codes and Standards not listed here but referred to elsewhere within this specification shall also be deemed to be part of this list.

In case of conflict between this specification and those (IS standards, codes etc.) referred to herein, the former shall prevail.

Some of the relevant Indian standards, Acts and Codes applicable to this section of the specification are listed below

IS : 383	Specification for coarse and fine aggregates from natural sources for Concrete.
IS : 432	Specification for mild steel and medium tensile steel bars and hard drawn steel wire for concrete reinforcement.
IS : 456	Code of practice for plain and reinforced concrete.
IS : 458	Specification for concrete pipes.
IS : 516	Method of test for strength of concrete.
IS : 800	Code of practice for use of structural steel in general building construction.
IS : 814	Specification for covered electrodes for metal arc welding for weld steel.
IS : 816	Code of practice for use of metal arc welding for general construction.
IS : 817	Code of practice for training and testing of metal arc welders.
IS : 875 (Pt. I to V)	Code of practice for design loads other than earthquake) for buildings and structures.
IS : 1038	Steel doors, windows and ventilators.

IS : 1172	Basic requirements for water supply, drainage and sanitation.
IS : 1361	Steel windows for industrial buildings.
IS : 1786	Specification for high strength deformed steel bars and wires for concrete reinforcement.
IS : 1892	Code of practice for subsurface investigation for foundation.
IS : 1893	Criteria for earthquake resistant design of structures.
IS : 1904	Code of practice for design and construction of foundations in soils; general requirements.
IS : 1905	Code of practice for structural safety of buildings - Masonry walls.
IS : 1948	Specification for aluminium doors, windows and ventilators.
IS : 2062	Steel for general structural purposes.
IS : 2131	Method of standard penetration test for soils.
IS : 2212	Code of practice for brickwork.
IS : 2645	Specification for Integral cement water proofing compounds.
IS:2720 (Part-II, IV TO VIII, XIV, XXI, XXIII, XXIV, XXVII TO XXIX, XL)	Methods of test for soils - determination for water content etc code of practice for earth work on canals.
IS : 2911	Code of practice for design and construction of pile foundations.
(Part-1/Sec.1)	Driven cast in situ concrete piles.
(Part-1/Sec.2)	Bored cast-in-situ concrete piles.
(Part-IV)	Load test on piles.
IS : 2974 (Part - I TO V)	Code of practice for design and construction of machine foundations.
IS : 3370 (Part I to IV)	Code of practice for concrete structures for the storage of liquids.
IS : 3658	Code of practice for liquid penetrant flaw detection.
IS : 3664	Code of practice for ultra sonic testing by pulse echo method.

IS : 4326	Code of practice for earthquake resistant design and construction of buildings.
IS : 4990	Specification for plywood for concrete shuttering work.
IS : 5624	Specification for foundation bolts.
IS : 7215	Tolerances for fabrication steel structures.
IS : 8112	Specification for 43 grade Ordinary Portland Cement.
IS : 9103	Specification for admixtures for concrete.
IS : 9595	Code of procedure of manual metal arc welding of mild steel.
IS : 10262	Recommended guidelines for concrete mix design.
IS : 13311	Method of non - destructive testing of concrete.
IS : 13755	Dust pressed ceramic tiles with water absorption of 3%, E6% (Group B11a)
ASTM 898 -89	Standard guide for use of high solid content, cold liquid-applied elastomeric water proofing membrane for use with separate wearing course.
AS/NZS 2728	Pre finished / pre painted sheet metal product for interior / exterior building applications – Performance requirements.
AS : 1365	Standards for steel manufacturing.
AS : 1397	A steel sheet & strip – hot – dipped-zinc-coated or Aluminium-Zinc coated.
AS : 3566	Self drilling screws for building and construction industry.
IRC : 37	Guidelines for the design of flexible pavements.
-	Manual on sewerage and sewage treatment (Published by CPH & EEO) As updated.

Indian Explosives Act. 1940 as updated.

A□□□□□r□-A

CRITERIA FOR EARTHQUAKE RESISTANT DESIGN OF STRUCTURES AND EQUIPMENT

All structures and equipment shall be designed for seismic forces adopting the site specific seismic information provided in this document and using the other provisions in accordance with IS:1893 (Part 1 to Part 4). Pending finalization of Part 5 of IS:1893, provisions of part 1 shall be read along with the relevant clauses of IS:1893:1984, for embankments.

A site specific seismic study has been conducted for the project site. The peak ground horizontal acceleration for the project site, the site specific acceleration spectral coefficients (in units of gravity acceleration 'g') in the horizontal direction for the various damping values and the multiplying factor (to be used over the spectral coefficients) for evaluating the design acceleration spectra are as given at Appendix-I.

Vertical acceleration spectral values shall be taken as 2/3rd of the corresponding horizontal values.

The site specific design acceleration spectra shall be used in place of the response acceleration spectra, given at figure-2 in IS:1893 (Part 1) and Annex B of IS:1893 (Part 4). The site specific acceleration spectra along with multiplying factors specified in Appendix-I includes the effect of the seismic environment of the site, the importance factor related to the structures and the response reduction factor. Hence, the design spectra do not require any further consideration of the zone factor (Z), the importance factor (I) and response reduction factor (R) as used in the IS:1893 (Part 1 to Part 4).

D□□ □□□□ □□ S□r□□□□r□□

The damping factor (as a percentage of critical damping) to be adopted shall not be more than as indicated below for:

a)	Steel structures	:	2%
b)	**R□□□□r□□d C□□□r□□□ □□r□□□□r□□**	:	5%
c)	Reinforced Concrete Stacks	:	3%
d)	Steel stacks	:	2%

M□□□□d □□A□□□□□□

Since most structures in a power plant are irregular in shape and have irregular distribution of mass and stiffness, dynamic analysis for obtaining the design seismic forces shall be carried out using the response spectrum method. The number of vibration modes used in the analysis should be such that the sum total of modal masses of all modes considered is at least 90 percent of the total seismic mass and shall also meet requirements of IS:1893 (Part 1). Modal combination of the peak response quantities shall be performed as per Complete Quadratic Combination (CQC) method or by an acceptable alternative as per IS:1893 (Part 1).

In general, seismic analysis shall be performed for the three orthogonal (two principal horizontal and one vertical) components of earthquake motion. The seismic response from the three components shall be combined as specified in IS:1893 (Part 1).

The spectral acceleration coefficient shall get restricted to the peak spectral value if the fundamental natural period of the structure falls to the left of the peak in the spectral acceleration curve.

For buildings, if the design base shear (V_B) obtained from modal combination is less than the base shear ($\bar{V}_B$) computed using the approximate fundamental period (T_a) given in IS:1893:Part 1 and using site specific acceleration spectra with appropriate multiplying factor, the response quantities (e.g. member forces, displacements, storey forces, storey shears and base reactions) shall be enhanced in the ratio of $\bar{V}_B / V_B$. However, no reduction is permitted if $\bar{V}_B$ is less than V_B.

For regular buildings less than 12m in height, design seismic base shear and its distribution to different floor levels along the height of the building may be carried out as specified under clause 7.5, 7.6 & 7.7 of IS:1893 (Part 1) and using site specific design acceleration spectra. The design horizontal acceleration spectrum value (Ah) shall be computed for the fundamental natural period as per clause 7.6 of IS:1893 (Part 1) using site specific spectral acceleration coefficients with appropriate multiplying factor given in Appendix-I.

D□□□□□D□□□□□□□□ □□r D□□□□□□□ □□r S□r□□□□r□□

The site specific design acceleration spectra is a reduced spectra and has an in-built allowance for ductility. Structures shall be engineered and detailed in accordance with relevant Indian/International standards to achieve ductility.

APPENDI□ □I

SITE SPECIFIC SEISMIC PARAMETERS FOR DESIGN OF STRUCTURES AND EQUIPMENT

T□□ □□r□□□□ □□□□ □□□□□□□□□ □□□□□□ □□ □□r□□ □□□r□ □□r □□□ □r□□□□□ □□□□ □□□□□□□□ □□ □□□□□□□ □:

1)	Peak ground horizontal acceleration	: 0.19g
2)	Multiplying factor to be applied to the site specific horizontal acceleration spectral coefficients (in units of gravity acceleration 'g') to obtain the design acceleration spectra	
a)	for moment resisting steel frames designed and detailed as per IS:800 and moment resisting RC frames designed and detailed as per IS:456	: 0.067
b)	for braced steel frames designed and detailed as per IS:800	: 0.05
c)	for moment resisting RC frames designed and detailed as per IS:456 and IS:13920	: 0.04
d)	for RCC Chimney	:0.133
e)	For Liquid retaining tanks	: 0.08
f)	for Steel chimney, Absorber tower	: 0.10
g)	for design of structures not covered under 2 (a) to 2 (f) above and under 3 below	: 0.067
3)	Multiplying factor to be applied to the site specific horizontal acceleration spectral coefficients (in units of gravity acceleration 'g') for design of equipment and structures where inelastic action is not relevant or not permitted	: 0.133

Note: g = Acceleration due to gravity

The horizontal seismic acceleration spectral coefficients are furnished in subsequent pages.

APPENDI□ □I

HORI□ONTAL SEISMIC ACCELERATION SPECTRAL COEFFICIENTS
I□ □□□□ □□□□□r NORTH KARANPURA STPP

P□r□d (S□□)	D□□ □□□ F□□□□r (□□ □ □□r□□□□□□ □□□r□□□□□ d□□ □□□)		
	2□	□□	□□
0.000	1	1	1
0.030	1	1	1
0.040	1.693	1.564	1.418
0.050	2.548	2.213	1.859
0.058	3.344	2.787	2.226
0.059	3.450	2.863	2.273
0.060	3.558	2.938	2.320
0.061	3.667	3.015	2.367
0.062	3.778	3.092	2.414
0.065	4.119	3.328	2.557
0.067	4.366	3.488	2.652
0.070	4.366	3.734	2.797
0.071	4.366	3.772	2.846
0.074	4.366	3.772	2.992
0.075	4.366	3.772	3.042
0.084	4.366	3.772	3.054
0.094	4.366	3.772	3.054
0.104	4.366	3.772	3.054
0.114	4.366	3.772	3.054
0.120	4.366	3.772	3.054
0.121	4.366	3.772	3.054
0.123	4.366	3.772	3.054
0.124	4.366	3.772	3.054
0.126	4.366	3.772	3.054
0.133	4.366	3.772	3.054
0.304	4.366	3.772	3.054
0.310	4.366	3.772	3.054
0.327	4.366	3.772	3.054
0.335	4.366	3.772	3.054
0.352	4.366	3.772	3.054
0.376	4.366	3.772	3.054
0.400	4.366	3.772	3.054
0.450	4.350	3.760	3.042
0.500	3.808	3.454	2.720
0.550	3.462	3.140	2.473
0.601	3.168	2.874	2.263
0.604	3.152	2.859	2.252
0.617	3.086	2.799	2.204
0.622	3.061	2.777	2.186
0.632	3.013	2.733	2.152
0.667	2.855	2.589	2.039

APPENDI□ □I

HORI□ONTAL SEISMIC ACCELERATION SPECTRAL COEFFICIENTS
I□ □□□□ □□□□□r NORTH KARANPURA STPP

P□r□d (S□□)	D□□ □□□ F□□□□r (□□ □ □□r□□□□□□ □□□r□□□□□ d□□ □□□□)		
	2□	□□	□□
0.767	2.482	2.252	1.773
0.867	2.196	1.992	1.569
0.967	1.969	1.786	1.406
1.067	1.784	1.619	1.275
1.167	1.632	1.480	1.165
1.267	1.503	1.363	1.073
1.367	1.393	1.263	0.995
1.467	1.298	1.177	0.927
1.567	1.215	1.102	0.868
1.667	1.142	1.036	0.816
1.767	1.078	0.977	0.770
1.867	1.020	0.925	0.728
1.967	0.968	0.878	0.691
2.067	0.921	0.836	0.658
2.167	0.879	0.797	0.628
2.267	0.840	0.762	0.600
2.367	0.804	0.730	0.575
2.467	0.772	0.700	0.551
2.567	0.742	0.673	0.530
2.667	0.714	0.648	0.510
2.767	0.688	0.624	0.492
2.867	0.664	0.602	0.474
2.967	0.642	0.582	0.458
3.067	0.621	0.563	0.443
3.167	0.601	0.545	0.429
3.267	0.583	0.529	0.416
3.367	0.565	0.513	0.404
3.467	0.549	0.498	0.392
3.544	0.537	0.487	0.384
3.559	0.535	0.485	0.382
3.666	0.519	0.471	0.371
3.765	0.506	0.459	0.361
3.865	0.493	0.447	0.352
3.965	0.480	0.436	0.343
4.006	0.475	0.431	0.339
4.017	0.474	0.430	0.339
4.056	0.469	0.426	0.335

ANNE□URE-B

CRITERIA FOR WIND RESISTANT DESIGN OF STRUCTURES AND EQUIPMENT

All structures shall be designed for wind forces in accordance with IS: 875 (Part-3) and as specified in this document. See Annexure – B for site specific information.

Along wind forces shall generally be computed by the Peak (i.e. 3 second gust) Wind Speed method as defined in the standard.

Along wind forces on slender and wind sensitive structures and structural elements shall also be computed, for dynamic effects, using the Gust Factor or Gust Effectiveness Factor method as defined in the standard. The structures shall be designed for the higher of the forces obtained from Gust Factor method and the Peak Wind Speed method.

Analysis for dynamic effects of wind must be undertaken for any structure which has a height to minimum lateral dimension ratio greater than "5" and/or if the fundamental frequency of the structure is less than 1 Hz.

Susceptibility of structures to across-wind forces, galloping, flutter, ovalling etc. should be examined and designed/detailed accordingly following the recommendations of IS:875(Part-3) and other relevant Indian standards.

It should be estimated if size and relative position of other structures are likely to enhance the wind loading on the structure under consideration. Enhancement factor, if necessary, shall suitably be estimated and applied to the wind loading to account for the interference effects.

D□□ □□□□ □□ S□r□□□□r□□

The damping factor (as a percentage of critical damping) to be adopted shall not be more than as indicated below for:

a)	Welded steel structures	1.0%
b)	Bolted steel structures	2.0%
c)	Reinforced concrete structures	1.6%
d)	Steel stacks	As per IS:6533 & CICIND Model Code whichever is more critical.

ANNE□URE-B

SITE SPECIFIC DESIGN PARAMETERS

The various design parameters, as defined in IS: 875 (Part-3), to be adopted for the project site shall be as follows:

a)	The basic wind speed "V_b" at ten metres above the mean ground level	47 metres/second
b)	The risk coefficient "K_1"	1.07
c)	Category of terrain	Category-2

CLAUSE NO.	TECHNICAL REQUIREMENTS
	ANNE□URE-C
1.00.0	**FOUNDATION SYSTEM AND GEOTECHNICAL DATA**
1.01.0	**S□□D□□**
	Owner has carried out geotechnical investigation at the project site. Few bore logs, available of vicinity to this area are enclosed at Annexure-III for Bidder's reference. The geotechnical investigation report for nearby areas will be made available for the Bidder's study at the Owner's office, if required. Onus of correct assessment/ interpretation and understanding of the existing subsoil condition / data is on the Bidder. The natural ground reduced levels (RLs) of FGD Area as per topographical survey drawing varies from RL 459.0m to 461.6m. Site levelling & grading had been carried out and achieved finished ground level (FGL) is RL (+) 460.0m i.e. there is maximum filling of 1.0m and maximum cutting of 1.6m in FGD area. However, site levelling in Hopper, Crusher House, Lime & Gypsum storage area etc. shall be done under this package and as per Topographical survey drawing existing ground levels are varying from 461.9m to 465.6m and FGL to be achieved in this area shall be as indicated in GLP. Bidder may refer topographical survey drawing for variation in existing/ natural ground level and FGL. As per borelog data, water table is varying from 1.6m to 3.8m at the time of field investigation and may fluctuate with season.
1.01.01	Since the available soil data is of vicinity, bidder shall carryout his own detailed soil investigation for facilities under this package and shall be as per the scheme approved by Owner**.** The scheme for geotechnical investigation shall be as given at Clause 1.07.00 and shall be approved by Owner before execution. Geotechnical investigation work shall be got executed by the Contractor through the agencies as mentioned in Clause No. 1.07.03. However, no time extension shall be given on account of soil investigation carried out by the Bidder. The geotechnical investigation report shall be prepared with detailed recommendations regarding type of foundation and allowable bearing pressure for various structures/ facilities and other soil parameters. The report shall be submitted for Owner's approval prior to commencement of design of foundation.
1.01.02	The Bidder should note that nothing extra whatsoever on account of variation between soil data collected by Owner and that found by the Bidder during geotechnical investigation by him or during execution of works, shall be payable.
1.01.03	Tank Foundations a) The tanks shall rest on flexible tank pad foundation, resting on sand with concrete ring wall to retain sand. Base of the concrete ring wall shall not rest on the expansive soil, if any. b) Entire loose/ soft soil inside the concrete ring wall shall be removed and shall be filled with sand. Sand for filling shall be clean and well graded conforming to IS 383 with grading Zone I to III. c) Sand shall be spread in layers not exceeding 30cm compacted thickness over the area. Each layer shall be uniformly compacted by mechanical means like plate vibrators, small vibratory rollers, etc to achieve a relative density of not less than 80%.

CLAUSE NO.	TECHNICAL REQUIREMENTS
	d) Other requirements of tank foundations shall be as per IS 803 and as specified elsewhere in the specifications.
1.02.00	**F□□□d□□□□ S□□□□□**
	The requirements for the foundation system to be adopted are as given in subsequent clauses. Depending upon the depth of competent strata/stratum, type of structures, functional requirement of facility, extent of cutting / filling, suitable foundation, open or pile shall be adopted with approval of owner.
102.01	**G□□□r□□R□□□□r□□ □□□**
	a) All structures/equipment shall be supported either on suitable open foundations (isolated, combined, raft) or pile foundations depending on type of structures/facilities, sub-strata, topography etc.
	b) The roads, ground floor slabs, trenches, pipe pedestals, channels/drains and staircase foundation with foundation loading intensity less than 4 T / M2 may be supported on open / shallow foundations resting on virgin / controlled compacted filled up soil.
	c) No other foundation (other than as mentioned in (b) above) shall rest on the filled up ground / soil.
	d) All foundations shall be designed in accordance with relevant parts of the latest revisions of Indian Standards.
	e) The water table for design purpose shall be considered at Finished Ground Level.
	f) A combination of open and pile foundations shall not be permitted under the same equipment / structure / building.
	g) Foundation for equipments on ground floor
	For equipments of static weight upto 1.5 T, the equipment may be supported on the ground floor slab by locally thickening the slab. Thickening of the ground floor slab shall be done upto an extent of about 0.6 m beyond the plan area of the equipment on all the sides. Further, the load intensity below the equipment shall be limited to 4T/m2. Other requirements of floor slab and compaction below the floor slab shall be adhered, as specified elsewhere in the specifications.
	For equipment of static weight more than 1.5 T, the equipment foundation shall be taken to the founding level or shall be built up with PCC from the level as mentioned in the Table 1. The pedestal of equipment foundation or the foundation Block shall be isolated from the adjoining floor slab by providing bitumen impregnated fiber board of minimum 50 mm thick, conforming to IS: 1838 all around the equipment pedestal for the full depth of the floor slab.
1.02.02	**O□□□ F□□□d□□□□□**
	In case open foundations are adopted, following shall be adhered to.

a) The minimum width of foundation shall be 1.0 m.

b) Minimum depth of foundation shall be 1.0m below Ground Level.

c) It shall be ensured that all foundations of a particular structure/ buildings/ facility shall rest on one bearing stratum.

d) Wherever the intended bearing sub-strata is virgin soil stratum but the actual stratum encountered during foundation excavation consists of filled up soil at founding level, under such cases either the foundation shall be lowered completely into the virgin stratum or the filled up soil upto the virgin layers shall be removed and built up through PCC (1:4:8) up to designed foundation level.

e) During design the Allowable Bearing Pressure shall be adopted after approval of geotechnical investigation report. However, the maximum allowable bearing pressure shall be as per approved geotechnical report and shall be limited to the values as furnished in Table-1.

Table-1

Founding Depth/ Stratum	Net Allowable Bearing Pressure T/m2		
	Isolated and combined footings including raft for 25mm permissible settlement in case of soil and 12mm in case of rocky strata	Isolated and combined footings for 40mm permissible settlement in case of soil and 12mm in case of rocky strata	Rafts (width > 6m) for 75mm permissible settlement in case of soil and 12mm in case of rocky strata
	Width upto 6.0m		
I□ □□□□ □□S□□			
2.0m below NGL	10	14	18
3.0m below NGL	14	18	24
I□ □□□□ □□r□□□□ □□r□□			
1m into highly weathered rock*	35	35	35
2m into highly weathered rock*	45	45	45

* Highly weathered sandstone with shale bands/highly weathered fine grained fractured rock, stratum is with SPT 'N' > 100 (Refusal) and core recovery (CR) around 20% or more.

For NGL & FGL of the proposed area GLP along with topographical survey drawing may be referred.

In case any loose/soft pockets in rocky strata is encountered at founding level, the same shall be removed completely upto the hard strata and filled up with PCC (1:4:8).

f) For open foundations, the total permissible settlement shall be governed by IS: 1904 / IS: 13063 and from functional requirements whichever is more stringent. However, total settlement shall be restricted to the following:

Isolated & Raft (Mill foundations/ Machine Foundations) resting on soil	25 mm
Isolated (other than Mill foundations/ Machine Foundations) resting on soil	40 mm
Raft (other than Mill foundations/ Machine Foundations) resting on soil	75 mm
Foundations in Weathered rock / rock	12 mm

Incase pile foundations are to be adopted the requirements under para "Pile Foundations" shall be adhered to.

1.02.03 Pile Foundations –

In case piles are adopted, following shall be adhered to :

i) The pile foundation shall be of RCC, Cast-in-situ bored piles as per IS:2911. Pile boring shall be done using Rotary Hydraulic Rigs. Two stage flushing of pile bore shall be ensured by airlift technique duly approved by the Employer.

If required, temporary or permanent MS liner may be provided for piling.

ii) The minimum diameter of pile shall be 600 mm. The allowable load capacity of the pile in different modes (vertical compression, lateral and pullout) shall be as per approved geotechnical report & shall be limited to the values given below:

Pile	Dia. (mm)	Vertical compression capacity (T)
Bored cast-in-situ pile	600	140
	760	250

The pile shall be socketed into rock strata with minimum socket length of 5 times the diameter of pile below the start of socketing horizon. Socketing horizon shall be considered as the zone wherein average core recovery is atleast than 30 %.

The uplift and lateral load capacity shall be respectively restricted to 35% and 5% of the allowable load capacity in vertical compression.

However, the pile capacities to be adopted shall be the least of the estimated design values and that obtained from the initial pile load tests.

iii) Only straight shaft piles shall be used. Minimum cast length of pile above cutoff level shall be 1.0 m.

iv) The contractor shall furnish design of piles (in terms of rated capacity, length, diameter, termination criteria to locate the founding level for construction of pile in terms of measurable parameter, reinforcement for job as well as test piles, pile load test arrangement, locations of initial test piles etc.) for Engineer's approval.

v) The piling work shall be carried out in accordance with IS:2911 (Relevant part) and accepted construction methodology. The construction methodology shall be submitted by the Contractor for Engineer's approval.

vi) Number of initial load tests to be performed for each diameter and rated capacity of pile shall be subject to minimum as under.

Vertical

Lateral Minimum of 2 Nos. in each mode.

Uplift

vii) The initial pile load test shall be conducted with test load upto three times the estimated pile capacity. In case of vertical compression test (initial test) the method of loading shall be cyclic as per IS:2911 (relevant part).

viii) Load test shall be conducted at pile Cut-off Level (COL). If the water table is above the COL the test pit shall be kept dry throughout the test period by suitable de-watering methods. Alternatively the vertical load test may be conducted at a level higher than COL. In such a case, an annular space shall be created to remove the effect of skin friction above COL by providing an outer casing of suitable diameter larger than the pile diameter.

ix) Number of routine pile load tests to be performed for each diameter/allowable capacity of pile shall be as under :

i) Vertical : 0.5% of the total number of piles provided.

ii) Lateral : 0.5% of the total number of piles provided.

CLAUSE NO.	TECHNICAL REQUIREMENTS

x) The routine tests on piles shall be conducted upto test load of one and half times the allowable pile capacity. Piles for routine load tests shall be approved by the Employer.

xi) In case, routine pile load test shows that the pile has not achieved the desired capacity or pile(s) have been rejected due to any other reason, then the Contractor shall install additional pile(s) as required and the pile cap design shall accordingly be reviewed and modified, if required.

xii) Testing of piles and interpretation of pile load test results shall be carried out as per IS:2911 (Part-4). Contractor shall ensure that all the measuring equipment and instruments are properly calibrated at a reputed laboratory / institute prior to their use. Settlement / movement of the pile top shall be made by Linear Variable Differential Transducers (LVDT) having a least count of 0.01mm.

xiii) The test load on initial test piles shall be applied by means of reaction from anchor piles / rock anchors alone or combination of anchor piles / rock anchors and kentledge with concrete blocks.

xiv) Low Strain Pile Integrity test shall be conducted on all test piles and job piles. This test shall be used to identify the routine load test and not intended to replace the use of static load test. This test is limited to assess the imperfection of the pile shaft and shall be undertaken by an independent specialist agency to be approved by Engineering department of Owner. The test equipment shall be of TNO or PDI make or equivalent. The process shall confirm to ASTM.

xv) High Strain Dynamic Load Test may be carried out for routine load testing of working piles. However, at least two numbers of static routine vertical load tests shall be carried out on pile on which high strain dynamic load test has already been carried out for establishing the correlation between the two tests. In case of discrepancy if any between dynamic and static vertical load tests, then additional static routine vertical load tests shall be conducted as decided by the Engineer and the results of static routine vertical load shall prevail. Number of routine vertical pile load tests as per clause 7.02.03 (ix) shall be total of static routine vertical load test and high strain dynamic load tests.

The procedure to carry out the test shall be submitted to the Engineer. The test and equipment shall conform to ASTM D4945-00. The test shall be conducted by an experienced independent test agency approved by the owner. Field data shall be submitted to the site engineer and shall include force velocity curves, pile capacity, simulated static load test curve, net and total pile displacement, pile integrity. A (Case pile wave analysis) CAPWAP or equivalent software analysis shall be conducted on the field data for correct capacity estimation and to evaluate end bearing and skin friction components of the pile.

CLAUSE NO.	TECHNICAL REQUIREMENTS
	xvi) From load considerations, single pile may be used under a column/tower. In that case, pile shall be connected with tie beams at pile cut off level in both directions. xvii) Contribution of frictional resistance of filled up soil if any, shall not be considered for computation of frictional resistance of piles. xviii) Reinforcement for job piles shall be designed as following: (a) Compression + bending piles: For these piles, the allowable safe pile capacities in compression and bending shall be considered. (b) Tension + bending piles: For these piles, the actual pile forces to be considered. However, maximum 3 types of combinations for varying percentage of tension capacity + bending case may be designed & adopted by contractor for the entire scope of work under this package.
1.0□.00	**S□□□□□□R□□□□r□□ □□□□**
1.03.01	Details of treatment for foundations / underground structures required to counteract soil / water chemical environment shall be as per detailed geotechnical investigation to be carried out by contractor. Contractor shall carry out chemical analysis during detailed geotechnical investigation and required treatment shall be provided accordingly.
1.04.00	**E□□□□□□□□□F□□□□□ □□d D□□ □□□r□□□**
1.04.01	For excavation works, comprehensive dewatering with well point or deep wells arrangement, if required, shall be adopted. Scheme for dewatering and design with all computations and back up data for dewatering shall be submitted for the owner's information. The water table shall be maintained at 0.5m below the founding depth.
1.04.02	Excavation for shallow foundations shall be covered with PCC immediately after reaching the founding level. In case of any local loosening of soil or any loose pockets are encountered at founding level during excavation the same shall be removed and compensated by PCC M7.5. The final layer of about 300 mm thickness above the founding level shall be excavated by suitable means, so as to avoid disturbance to founding stratum.
1.04.03	Backfilling around foundations, pipes, trenches, sumps, pits, plinths, etc. shall be carried out with approved material in layers not exceeding 300 mm compacted thickness (higher thickness of layers upto 500mm with heavy mechanical compacting equipment) and each layer shall be compacted to 90% of standard proctor density for cohesive soils and to 80% of relative density for non cohesive soils Rock pieces having size less than 150 mm and interstices filled with soil may be used for backfilling around foundation, plinths etc. and shall be compacted to minimum of 85% of original stack of material after filling the interstices.
1.04.04	Founding level for trenches/channels shall be decided as per functional requirement. The bottom of excavation shall be properly compacted prior to casting of bottom slab of trenches / channels.

CLAUSE NO.	TECHNICAL REQUIREMENTS
1.04.05	CBR tests for pavement/road design shall be carried out by the Contractor after earth filling (if applicable) has been completed upto the formation level.
1.04.0□	**THE CONTRACTOR SHALL TAKE ALL NECESSARY MEASURES DURING E□CA□ATION TO PRE□ENT THE HA□ARDS OF FALLING OR SLIDING OF MATERIAL OR ARTICLE FROM ANY BANK OR SIDE OF SUCH E□CA□ATION WHICH IS MORE THAN ONE AND A HALF METER ABO□E THE FOOTING BY PRO□IDING ADEQUATE PILING□SHORING□BRACING ETC. AGAINST SUCH BANK OR SIDES.** Adequate and suitable warning signs shall be put up at conspicuous places at the excavation work to prevent any persons or vehicles falling into the excavation trench. No worker should be allowed to work where he may be stuck or endangered by excavation machinery or collapse of excavations or trenches.
1.0□.00	**E□CA□ATION IN ROCK** Excavation in rock shall be carried out by mechanical means and if blasting is required for founding of some of the structures under this package, control blasting only shall be carried out.
1.05.01	Controlled blasting shall be done by a specialised agency duly approved by Engineer. All controlled blasting shall be done by using time delay detonators (i.e. excel type).
1.05.02	a) Contractor shall engage an agency expert in blasting such as, NIRM (National Institute of Rock Mechanics), CMPDIL, Central Institute of Mining and Fuel Research Dhanbad, Dept. of Mining of Govt. Institutions etc. to design detailed blasting scheme and get the same approved from Engineer before carrying out the blasting operation. All blasting shall be done as per the approved blasting scheme & initial blasting operations shall be done under the supervision & guidance of the representative of the blasting expert. b) All the statutory laws, (Explosives Act etc.) rules, regulations, Indian Standards, etc. pertaining to the acquisition, transport, storage, handling and use of explosives, etc. shall be strictly followed. c) The Contractor shall obtain Licenses from Competent Authorities for undertaking blasting work as well as for procuring, transporting to site and storing the explosives as per explosives act. The Contractor shall be responsible for the safe transport, use, custody and proper accounting of the explosive Materials. d) The Contractor shall be responsible and liable for any accident and injury / damage which may occur to any person or property of the project or public on account of any operations connected with the storage, transportation, handling or use of explosive and blasting operations.
1.0□.00	**S□□□□□□□ □ S□□r□□**
	The contractor shall ascertain for himself the nature of materials to be excavated and difficulties, if any, likely to be encountered in excavation while executing the work. Sheet piling, sheeting and shoring, bracing and maintaining suitable slopes,

CLAUSE NO.	TECHNICAL REQUIREMENTS
	drainage, etc. shall be provided and installed by the Contractor, to the satisfaction of the Engineer.
1.0□.00	**G□□□□□□□□□□I□□□□□□□□□□**
	The Contractor shall carry out detailed geotechnical investigation in the areas under his scope for establishing the sub-surface conditions and to decide type of foundations for the structures envisaged, construction methods, any special requirements/treatment called for remedial measures for sub-soil/ foundations etc. in view of soft sub-soils, aggressive sub-soils and water, expansive/swelling soils etc. prior to commencement of detailed design/drawings. The Contractor shall obtain the approval for the field testing scheme proposed by him from the Owner before undertaking the geotechnical investigation work.
1.07.01.00	**S□□□□ □ □□□□□□□□□□□□□I□□□□□□□□□**
1.07.02.01	Field test shall include but not be limited to the following: Boreholes, Standard Penetration Test (SPT), Dynamic Cone Penetration Test (DCPT), collection of disturbed samples (DS) and undisturbed soil samples (UDS), Trial Pits (TP), Plate Load Tests (PLT), Electrical Resistivity Test (ERT), In situ field permeability tests, collection of water samples, etc.
1.07.02.02	The diameter of borehole shall be minimum 150 mm in soil and 76 mm in rock. The diameter of UDS sampler shall be 100 mm minimum. Core drilling in rock shall be done by using hydraulically feed rotary drill & double tube core barrel with diamond bit.
1.07.02.03	The minimum tests are indicated in Clause No. 7.08.00. Adequate number of tests shall be conducted up to sufficient depth for complete determination of subsoil conditions. The depth of boreholes shall be as specified in Appendix A. SPT shall be carried out in all types of soil deposits and in all rock formations with core recovery up to 20%, met within a borehole. This test shall be conducted at every 3.0 m interval or at change of strata, up to the final depth. SPT 'N' of 100 and above shall be referred as refusal. UDS shall be collected at every 3.0 m interval or at change of strata up to depth of borehole. UDS may be replaced by additional SPT, if SPT'N' value in the strata is above 50.
1.07.02.04	Laboratory tests shall be done as per relevant IS codes. The laboratory tests, not be limited to the following shall be conducted on disturbed and undisturbed soil samples, rock samples & water samples collected during field investigations in sufficient numbers. **L□□□r□□□r□ T□□□□ □□ S□□S□□ □□□□** Laboratory tests shall be carried out on disturbed and undisturbed soil samples for Grain Size Analysis, Hydrometer Analysis, Atterberg Limits, Triaxial Shear Tests (UU), Natural Moisture Content, Specific Gravity and Bulk Unit Weight, Consolidation Tests, Unconfined Compression Test, Free swell Index, Shrinkage Limit, Swell Pressure Test, Chemical Analysis test on soil and water samples to determine the carbonates, sulphates, chlorides, nitrates, pH, organic matter and any other chemicals harmful to concrete and reinforcement/ steel. **L□□□r□□□r□ T□□□□ □□ R□□□ S□□ □□□□** Moisture content, porosity & density, Specific Gravity, Hardness, Soundness, Slake durability index, Unconfined compression test (Both at saturated and in-situ water content), Point load strength index and deformability test (Both at saturated and in-situ water content) shall be carried out on rock samples.

1.07.02.05 Geotechnical investigation (field & laboratory) shall be carried out in accordance with the provisions of relevant Indian Standards.

On completion of all field & laboratory work, geotechnical investigation report shall be submitted for Owner's review/approval. The Geotechnical investigation report shall contain geological information of the region, procedure adopted for investigation, field & laboratory observations/ data/ records, analysis of results & recommendations on type of foundation for different type of structures envisaged for all areas of work with supporting calculations. Recommendations on treatment for soil, foundation, based on subsoil characteristics, soft soils, aggressive chemicals, expansive soils, etc.

Recommendations on foundation system and the net allowable bearing pressures and pile capacity shall be based on the conservative values of geotechnical investigation data.

1.07.03.00 Geotechnical investigation work shall be got executed by the Contractor through the following agencies.

1. C.E.TESTING COMPANY Pvt. Ltd, Kolkata
2. Cengrs Geotechnica Pvt. Ltd, New Delhi
3. M.K. Soil Testing Laboratory, Ahemdabad
4. SECON Pvt Ltd, Bangalore
5. Soil Engineering Consultants, New Delhi
6. Orbital Infrastructure Consultancy & Research Pvt. Ltd. Cuttack
7. KCT Consultancy Services, Ahemdabad
8. ARKITECHNO Consultants (India) Pvt. Ltd. Bhubaneswar

1.0□.00 **G□□□□□□□□□□l□□□□□□□□□□ S□□□□ □**

a) **B□r□□□□□□ (M□□□□ □□)**

S.N	**S□r□□□□r□**	**S□□□□□□N□□ □□r □□ □□r□□□□□**	**D□□□□ □□ □□r□□□□□**	**R□□ □r□□**
1	FGD	Minimum 14 Nos.	Depth of boreholes shall be 20m to 25m.	Depth of boreholes shall be as mentioned in column "Depth of Borehole" or 5m continuous
2	Crusher House	Minimum 2 Nos.	Depth of boreholes shall be 20m to 25m.	
3	Gypsum and Lime storage area	Minimum 10 Nos.	Depth of boreholes shall be 10m to 15m	

4	Chimney	Minimum 2 Nos.	25 to 30 m	in rock with RQD > 50% whichever is earlier.
5	Other Structure/Facility	Minimum 2 Nos. boreholes under each area / facility	15 to 20 m	

□) **O□□r F□□d T□□□□ (M□□□ □□)**

1	Cyclic Plate Load Test (CPLT)	3 nos	Test Depth from 2 to 4 m	
2	**TRIAL PIT (TP)**	5 Nos.	Depth - 3 m	
3	**IN SITU PERMEABILITY TEST IN BOREHOLES**	In minimum 3 Nos. of boreholes	Tests shall be conducted at depths of 1.0m, 3.0m, 5.0m, 8.0m and 12.0m.	
4	**ERT**	Minimum 10 Nos.		

- Depth and location of Boreholes and other field tests (PLT, ERT, field permeability tests etc.) shall be approved by Owner before execution of geotechnical investigation work.
- Investigation in any other building / structure / facilities / trestles which are not mentioned above shall also be carried out, if required, by the bidder for the facilities under his scope.

Project : G/I for 3x660MW North Karanpura Super Thermal Power Project, Jharkhand. CETEST

Job No : 3401	Created by : SKD	Created on : 23/12/2014	Sheet No:

BORE LOG DATA SHEET — BORE HOLE NO.1

Co-ordinates E=7937 N=12065

Field Test	Nos	Samples	Nos
Penetrometer (SPT)	6	Undisturbed (UDS)	2
Cone (Pc)		Penetrometer (SPT)	6
Vane (V)		Disturbed (DS)	1
		Water Sample (WS)	0

Commencement Date : 11/12/2014
Completion Date : 13/12/2014
Bore Hole Diameter : 150mm / NX.
Level Of Ground : 459.320 m.
Water Struck At :
Standing Water Level : 1.65 m.

DESCRIPTION	SYMBOL	N-VALUE (EACH DIVN. = 15cm)	SAMPLES Ref. No	SAMPLES Depth (m)
0.00m				
Stiff, yellowish brown to brownish grey, silty clay / clayey silt with decomposed rock. Obs. kankar & sand mixture.		3 4 6 (10) 4 4 8 (12) 5 6 9 (15) 22 47 31 (>100) 4.0 cm Pentn. Refusal	DS-1 SPT-1 UDS-1 SPT-2 UDS-2 SPT-3 SPT-4 *SPT-5 *SPT-6	0.50 1.00-1.45 2.00-2.45 2.45-2.90 3.50-3.95 3.95-4.40 5.00-5.34 5.55-5.60 5.75-5.78
5.75m		100 5.0 cm Pentn. Refusal 100 3.0 cm Pentn.		5.75
Highly weathered, light greyish brown, fine grained, highly fractured shale.		NX rotary drilling from 5.75m to 32.50m	R1 R2 R3 R4 R5 R6 R7 R8 R9 R10 R11 R12 R13 R14	CR=21% RQD=Nil CR=29% RQD=Nil CR=24% RQD=Nil CR=33% RQD=Nil CR=36% RQD=Nil CR=44% RQD=32% CR=53% RQD=37% CR=52% RQD=41% CR=45% RQD=31% CR=51% RQD=47% CR=57% RQD=31% CR=53% RQD=Nil CR=57% RQD=32% CR=52% RQD=13%
8.00m				6.50 7.25 8.00
Highly weathered, light greyish brown, fine grained, highly fractured shale.				
8.75m				8.75
Highly to moderately weathered, brownish grey, fine grained, moderately fractured sandstone.				9.50
10.25m				10.25
Moderately weathered, brownish grey, fine grained, moderately fractured sandstone.				11.00
11.00m				11.75 12.50 13.25 14.00 14.75
Moderately weathered, light greyish brown, medium to fine grained, moderately fractured sandstone.				
15.50m				15.50
16.30m				16.25

BH-1/Sheet-1

Project : G/I for 3x660MW North Karanpura Super Thermal Power Project, Jharkhand. CETEST

Job No : 3401	Created by : SKD	Created on : 23/12/2014	Sheet No:

BORE LOG DATA SHEET — **BORE HOLE NO.1** — Co-ordinates E=7937 N=12065

Field Test	Nos	Samples	Nos
Penetrometer (SPT)	6	Undisturbed (UDS)	2
Cone (Pc)		Penetrometer (SPT)	6
Vane (V)		Disturbed (DS)	1
		Water Sample (WS)	0

Commencement Date : 11/12/2014
Completion Date : 13/12/2014
Bore Hole Diameter : 150mm / NX.
Level Of Ground : 459.32 m.
Water Struck At :
Standing Water Level : 1.65 m.

DESCRIPTION	SYMBOL	N–VALUE (EACH DIVN. = 15cm)	SAMPLES Ref. No	SAMPLES Depth (m)
16.30m.				
			R15	CR=55% RQD=43% 17.00
			R16	CR=67% RQD=49% 17.75
			R17	CR=69% RQD=55% 18.50
			R18	CR=74% RQD=53% 19.25
			R19	CR=68% RQD=44% 20.00
			R20	CR=81% RQD=74% 20.75
			R21	CR=83% RQD=64% 21.50
			R22	CR=81% RQD=40% 23.00
Moderately to slightly weathered / fresh, light blackish grey, fine grained, moderately to slightly fractured sandstone.			R23	CR=84% RQD=47% 24.50
			R24	CR=82% RQD=58% 26.00
			R25	CR=85% RQD=42% 27.50
			R26	CR=83% RQD=69% 29.00
			R27	CR=86% RQD=65% 30.50
			R28	CR=85% RQD=68% 32.00
N.B. – '*' means sample could not be recovered. 32.50m.			R29	CR=88% RQD=84% 32.50

BH–1/Sheet–2

Project : G/I for 3x660MW North Karanpura Super Thermal Power Project, Jharkhand. CETEST

Job No : 3401	Created by : SKD	Created on : 23/12/2014	Sheet No:

BORE LOG DATA SHEET — BORE HOLE NO.2

Co-ordinates E=7925 N=12047

Field Test	Nos	Samples	Nos
Penetrometer (SPT)	4	Undisturbed (UDS)	1
Cone (Pc)		Penetrometer (SPT)	4
Vane (V)		Disturbed (DS)	1
		Water Sample (WS)	1

Commencement Date : 08/12/2014
Completion Date : 11/12/2014
Bore Hole Diameter : 150mm / NX.
Level Of Ground : 459.70 m.
Water Struck At :
Standing Water Level : 1.65 m.

DESCRIPTION	SYMBOL	N-VALUE (EACH DIVN. = 15cm)	SAMPLES Ref. No	SAMPLES Depth (m)
0.00m Stiff, yellowish brown, silty clay / clayey silt. Obs. kankar & sand mixture.		3 5 6 — 11	DS-1 SPT-1 WS-1	0.50 1.00-1.45 1.65
1.90m Hard, brownish grey, silty clay / clayey silt with mica & decomposed rock.		17 38 45 — ≥100 (10.0 cm Pentn.) 100 — Refusal (4.0 cm Penetn.) 100 — Refusal (3.0 cm Penetn.) NX rotary drilling from 2.90m to 30.00m	*UDS-1 SPT-2 *SPT-3 *SPT-4	2.00-2.10 2.10-2.50 2.70-2.74 2.90-2.93
2.90m Highly to moderately weathered, brownish grey, medium to fine grained, moderately fractured, alternation of sandstone & shale.			R1 R2 R3 R4 R5 R6 R7 R8 R9 R10 R11 R12 R13 R14 R15 R16 R17 R18	2.90 CR=28% RQD=Nil — 3.50 CR=36% RQD=32% — 4.25 CR=35% RQD=Nil — 5.00 CR=39% RQD=Nil — 5.75 CR=40% RQD=20% — 6.50 CR=41% RQD=Nil — 7.25 CR=43% RQD=23% — 8.00 CR=45% RQD=Nil — 8.75 CR=47% RQD=20% — 9.50 CR=51% RQD=27% — 10.25 CR=44% RQD=28% — 11.00 CR=51% RQD=20% — 11.75 CR=55% RQD=13% — 12.50 CR=57% RQD=Nil — 13.25 CR=52% RQD=13% — 14.00 CR=64% RQD=49% — 14.75 CR=69% RQD=55% — 15.50 CR=61% RQD=31% — 16.25
9.50m Moderately to slightly weathered, brownish grey, medium to fine grained, moderately fractured alternation of sandstone & shale.				
16.30m				

BH-2/Sheet-1

Project : G/I for 3x660MW North Karanpura Super Thermal Power Project, Jharkhand. CETEST

Job No : 3401 | Created by : SKD | Created on : 23/12/2014 | Sheet No:

BORE LOG DATA SHEET — BORE HOLE NO.9

Co-ordinates E=7939 N=11986

Field Test	Nos	Samples	Nos
Penetrometer (SPT)	4	Undisturbed (UDS)	1
Cone (Pc)		Penetrometer (SPT)	4
Vane (V)		Disturbed (DS)	1
		Water Sample (WS)	0

Commencement Date : 11/12/2014
Completion Date : 13/12/2014
Bore Hole Diameter : 150mm / NX.
Level Of Ground : 460.398 m.
Water Struck At :
Standing Water Level : 2.30 m.

DESCRIPTION	SYMBOL	N-VALUE (EACH DIVN. = 15cm)	SAMPLES Ref. No	SAMPLES Depth (m)
0.00m				
Hard, brownish grey, silty clay / clayey silt with mica & decomposed rock.		12 20 24 — 44	DS-1	0.50
			SPT-1	1.00-1.45
		22 43 35 — >100	*UDS-1	2.10-2.20
		4.0 cm Pentn.	SPT-2	2.20-2.54
		100 — Refusal		
		5.0 cm Pentn.	*SPT-3	3.00-3.05
3.25m		100 — Refusal	*SPT-4	3.25-3.29 3.25
		4.0 cm Pentn.	R1	CR=29% RQD=Nil 4.00
		NX rotary drilling from 3.25m to 25.00m	R2	CR=39% RQD=Nil 4.75
			R3	CR=32% RQD=19% 5.50
Highly to moderately weathered, brownish grey, fine grained, highly to moderately fractured, alternation of sandstone & shale.			R4	CR=35% RQD=28% 6.25
			R5	CR=44% RQD=31% 7.00
			R6	CR=49% RQD=39% 7.75
			R7	CR=47% RQD=20% 8.50
			R8	CR=48% RQD=Nil 9.25
			R9	CR=50% RQD=Nil 10.00
10.00m			R10	CR=53% RQD=37% 10.75
Moderately to slightly weathered, brownish grey, fine grained, highly to moderately fractured, alternation of sandstone & shale.			R11	CR=63% RQD=55% 11.50
			R12	CR=61% RQD=43% 12.25
12.25m			R13	CR=64% RQD=59% 13.00
Moderately to slightly weathered, light brownish grey, fine grained, moderately fractured alternation of sandstone & shale.			R14	CR=56% RQD=32% 13.75
13.75m			R15	CR=60% RQD=13% 14.50
Moderately to slightly weathered / fresh, brownish grey to light blackish grey, fine grained, medium to slightly fractured, alternation of sandstone & shale.			R16	CR=63% RQD=Nil 15.25
			R17	CR=61% RQD=Nil 16.00
16.30m				

BH-9/Sheet-1

Project : G/I for 3x660MW North Karanpura Super Thermal Power Project, Jharkhand. CETEST

Job No : 3401 | Created by : SKD | Created on : 23/12/2014 | Sheet No:

BORE LOG DATA SHEET — BORE HOLE NO.9

Co-ordinates E=7939 N=11986

Field Test	Nos	Samples	Nos
Penetrometer (SPT)	4	Undisturbed (UDS)	1
Cone (Pc)		Penetrometer (SPT)	4
Vane (V)		Disturbed (DS)	1
		Water Sample (WS)	0

Commencement Date : 11/12/2014
Completion Date : 13/12/2014
Bore Hole Diameter : 150mm / NX.
Level Of Ground : 460.398 m.
Water Struck At :
Standing Water Level : 2.30 m.

DESCRIPTION	SYMBOL	N-VALUE (EACH DIVN. = 15cm)	SAMPLES Ref. No	SAMPLES Depth (m)
16.30m.				
Moderately to slightly weathered / fresh, brownish grey to light blackish grey, fine grained, medium to slightly fractured, alternation of sandstone & shale.			R18	CR=64% RQD=13% 16.75
			R19	CR=66% RQD=55% 17.50
			R20	CR=64% RQD=33% 18.25
			R21	CR=69% RQD=35% 19.00
			R22	CR=73% RQD=16% 19.75
			R23	CR=81% RQD=44% 20.50
			R24	CR=84% RQD=80% 21.25
			R25	CR=83% RQD=72% 22.75
			R26	CR=85% RQD=69% 24.25
			R27	CR=88% RQD=75% 25.00
25.00m.				

N.B. – '*' means sample could not be recovered.

BH-9/Sheet-2

Project : G/I for 3x660MW North Karanpura Super Thermal Power Project, Jharkhand. CETEST

Job No : 3401 | **Created by : SKD** | **Created on : 23/12/2014** | **Sheet No:**

BORE LOG DATA SHEET — BORE HOLE NO.13 — Co-ordinates E=7937 N=11932

Field Test	Nos	Samples	Nos
Penetrometer (SPT)	5	Undisturbed (UDS)	2
Cone (Pc)		Penetrometer (SPT)	5
Vane (V)		Disturbed (DS)	1
		Water Sample (WS)	0

Commencement Date : 05/12/2014
Completion Date : 10/12/2014
Bore Hole Diameter : 150mm / NX.
Level Of Ground : 460.287 m.
Water Struck At :
Standing Water Level : 3.10 m.

DESCRIPTION	SYMBOL	N-VALUE (EACH DIVN. = 15cm)	SAMPLES Ref. No	SAMPLES Depth (m)
0.00m				
Medium, brownish grey, silty clay / clayey silt. Obs. mica, kankar & sand mixture.		3 3 5 (8)	DS-1	0.50
			SPT-1	1.00-1.45
2.45m			UDS-1	2.00-2.45
Stiff, brownish grey, silty clay with decomposed rock & mica.		4 6 8 (14)	SPT-2	2.45-2.90
		29 71 for 5.0 cm Pentn. (>100)	*UDS-2	3.50-3.60
			SPT-3	3.60-3.80
4.05m		100 for 5.0 cm Pentn. Refusal	*SPT-4	3.90-3.95
			*SPT-5	4.05-4.08
Highly weathered, greyish brown, fine grained, highly fractured alternation of sandstone & shale.		100 for 3.0 cm Pentn. Refusal	R1	CR=24% RQD=Nil (4.05-4.75)
		NX rotary drilling from 4.05m to 31.50m	R2	CR=28% RQD=Nil (4.75-5.50)
5.50m			R3	CR=41% RQD=23% (5.50-6.25)
Highly to moderately weathered, brownish grey, fine grained, moderately fractured, alternation of sandstone & shale.			R4	CR=35% RQD=20% (6.25-7.00)
			R5	CR=39% RQD=32% (7.00-7.75)
			R6	CR=35% RQD=17% (7.75-8.50)
			R7	CR=41% RQD=Nil (8.50-9.25)
			R8	CR=44% RQD=Nil (9.25-10.00)
			R9	CR=48% RQD=26% (10.00-10.75)
			R10	CR=52% RQD=13% (10.75-11.50)
			R11	CR=49% RQD=Nil (11.50-12.25)
12.25m			R12	CR=55% RQD=32% (12.25-13.00)
Moderately to slightly weathered, brownish grey, fine grained, moderately fractured, alternation of sandstone & shale.			R13	CR=51% RQD=24% (13.00-13.75)
			R14	CR=59% RQD=47% (13.75-14.50)
			R15	CR=61% RQD=37% (14.50-15.25)
			R16	CR=60% RQD=17% (15.25-16.00)
16.30m				

BH-13/Sheet-1

Project : G/I for 3x660MW North Karanpura Super Thermal Power Project, Jharkhand. CETEST

Job No : 3401 | Created by : SKD | Created on : 23/12/2014 | Sheet No:

BORE LOG DATA SHEET — BORE HOLE NO.13

Co-ordinates E=7937 N=11932

Field Test	Nos	Samples	Nos
Penetrometer (SPT)	5	Undisturbed (UDS)	2
Cone (Pc)		Penetrometer (SPT)	5
Vane (V)		Disturbed (DS)	1
		Water Sample (WS)	0

Commencement Date : 05/12/2014
Completion Date : 10/12/2014
Bore Hole Diameter : 150mm / NX.
Level Of Ground : 460.287 m.
Water Struck At :
Standing Water Level : 3.10 m.

DESCRIPTION	SYMBOL	N-VALUE (EACH DIVN. = 15cm)	SAMPLES Ref. No	SAMPLES Depth (m)
16.30m. Moderately to slightly weathered, brownish grey, fine grained, moderately fractured, alternation of sandstone & shale.			R17 CR=55% RQD=24%	16.75
			R18 CR=61% RQD=37%	17.50
			R19 CR=72% RQD=56%	18.25
18.25m. Slightly weathered, light greyish brown, fine grained, moderately fractured alternation of sandstone & shale.			R20 CR=67% RQD=45%	19.00
			R21 CR=64% RQD=25%	19.75
20.50m.			R22 CR=62% RQD=23%	20.50
			R23 CR=67% RQD=53%	21.25
			R24 CR=64% RQD=33%	22.00
			R25 CR=70% RQD=48%	22.75
			R26 CR=71% RQD=65%	23.50
Slightly weathered, light blackish grey, fine grained, moderately to slightly fractured, alternation of sandstone & shale.			R27 CR=73% RQD=72%	24.25
			R28 CR=70% RQD=36%	25.00
			R29 CR=73% RQD=27%	25.75
			R30 CR=75% RQD=15%	26.50
			R31 CR=73% RQD=69%	27.25
			R32 CR=76% RQD=71%	28.00
28.00m.			R33 CR=81% RQD=78%	28.75
			R34 CR=84% RQD=73%	29.50
Fresh, light blackish grey, fine grained, moderately fractured alternation of sandstone & shale.			R35 CR=86% RQD=58%	
			R36 CR=92% RQD=52%	31.00
31.50m.				31.50
N.B. – '*' means sample could not be recovered.				

BH-13/Sheet-2

Project : G/I for 3x660MW North Karanpura Super Thermal Power Project, Jharkhand. CETEST

Job No : 3401 | **Created by : SKD** | **Created on : 23/12/2014** | **Sheet No:**

BORE LOG DATA SHEET — BORE HOLE NO.15 — Co-ordinates E=7925 N=11914

Field Test	Nos	Samples	Nos
Penetrometer (SPT)	5	Undisturbed (UDS)	1
Cone (Pc)		Penetrometer (SPT)	5
Vane (V)		Disturbed (DS)	1
		Water Sample (WS)	0

Commencement Date : 10/12/2014
Completion Date : 13/12/2014
Bore Hole Diameter : 150mm / NX.
Level Of Ground : 460.141 m.
Water Struck At :
Standing Water Level : 3.10 m.

DESCRIPTION	N-VALUE (EACH DIVN. = 15cm)	SAMPLES Ref. No	Depth (m)
0.00m Stiff, yellowish brown to brownish grey, silty clay / clayey silt with mica & decomposed rock.	2 5 6 — 11	DS-1	0.50
		SPT-1	1.00-1.45
2.09m Hard, brownish grey, silty clay / / clayey silt with mica & decomposed rock.	13 22 31 — 53	*UDS-1	2.00-2.09
		SPT-2	2.09-2.54
	34 66 — >100 (9.0 cm Pentn.)	SPT-3	2.90-3.14
	100 — Refusal (4.0 cm Penth.)	SPT-4	3.30-3.34
3.50m		SPT-5	3.50-3.53
Highly to moderately weathered, brownish grey, fine to medium grained, highly to moderately fractured, alternation of sandstone & shale.	100 — Refusal (3.0 cm Penth.) NX rotary drilling from 3.50m to 30.00m	R1	CR=26% RQD=Nil 3.50 – 4.25
		R2	CR=29% RQD=13% 4.25 – 5.00
		R3	CR=28% RQD=15% 5.00 – 5.75
		R4	CR=36% RQD=Nil 5.75 – 6.50
		R5	CR=35% RQD=Nil 6.50 – 7.25
		R6	CR=47% RQD=17% 7.25 – 8.00
		R7	CR=37% RQD=Nil 8.00 – 8.75
		R8	CR=41% RQD=13% 8.75 – 9.50
		R9	CR=45% RQD=35% 9.50 – 10.25
10.25m Moderately weathered, brownish grey, fine grained, moderately fractured, alternation of sandstone & shale.		R10	CR=41% RQD=Nil 10.25 – 11.00
11.00m Moderately to slightly weathered, brownish grey, fine grained, moderately fractured, alternation of siltstone & shale.		R11	CR=52% RQD=Nil 11.00 – 11.75
		R12	CR=52% RQD=47% 11.75 – 12.50
		R13	CR=65% RQD=42% 12.50 – 13.25
		R14	CR=52% RQD=47% 13.25 – 14.00
14.00m Moderately to slightly weathered / fresh, brownish grey to light blackish grey, fine grained, moderately fractured, alternation of sandstone & shale.		R15	CR=56% RQD=32% 14.00 – 14.75
		R16	CR=57% RQD=Nil 14.75 – 15.50
		R17	CR=60% RQD=Nil 15.50 – 16.25
16.30m			

BH-15/Sheet-1

Project : G/I for 3x660MW North Karanpura Super Thermal Power Project, Jharkhand. CETEST

Job No : 3401 | Created by : SKD | Created on : 23/12/2014 | Sheet No:

BORE LOG DATA SHEET — BORE HOLE NO.15 — Co-ordinates E=7925 N=11914

Field Test	Nos	Samples	Nos
Penetrometer (SPT)	5	Undisturbed (UDS)	1
Cone (Pc)		Penetrometer (SPT)	5
Vane (V)		Disturbed (DS)	1
		Water Sample (WS)	0

Commencement Date : 10/12/2014
Completion Date : 13/12/2014
Bore Hole Diameter : 150mm / NX.
Level Of Ground : 460.141 m.
Water Struck At :
Standing Water Level : 3.10 m.

DESCRIPTION	SYMBOL	N-VALUE (EACH DIVN. = 15cm)	SAMPLES Ref. No	SAMPLES Depth (m)
16.30m.				
			R18	CR=61% RQD=35% 17.00
			R19	CR=64% RQD=44% 17.75
			R20	CR=63% RQD=Nil 18.50
			R21	CR=60% RQD=33% 19.25
			R22	CR=67% RQD=40% 20.00
			R23	CR=64% RQD=24% 20.75
			R24	CR=68% RQD=56% 21.50
			R25	CR=73% RQD=65% 22.25
Moderately to slightly weathered / fresh, brownish grey to light blackish grey, fine grained, moderately fractured, alternation of sandstone & shale.			R26	CR=70% RQD=32% 23.00
			R27	CR=80% RQD=24% 23.75
			R28	CR=83% RQD=Nil 24.50
			R29	CR=85% RQD=36% 26.00
			R30	CR=82% RQD=15% 27.50
			R31	CR=84% RQD=13% 28.50
			R32	CR=87% RQD=56% 30.00
30.00m.				

N.B. – '*' means sample could not be recovered.

BH-15/Sheet-2

Project : G/I for 3x660MW North Karanpura Super Thermal Power Project, Jharkhand. CETEST

Job No : 3401	Created by : SKD	Created on : 23/12/2014	Sheet No:

BORE LOG DATA SHEET — BORE HOLE NO.18 — Co-ordinates E=7939 N=11853

Field Test	Nos	Samples	Nos
Penetrometer (SPT)	6	Undisturbed (UDS)	1
Cone (Pc)		Penetrometer (SPT)	6
Vane (V)		Disturbed (DS)	1
		Water Sample (WS)	0

Commencement Date : 14/12/2014
Completion Date : 15/12/2014
Bore Hole Diameter : 150mm / NX.
Level Of Ground : 458.447 m.
Water Struck At :
Standing Water Level : 3.40 m.

DESCRIPTION	SYMBOL	N–VALUE (EACH DIVN. = 15cm)	SAMPLES Ref. No	SAMPLES Depth (m)
0.00m Stiff, yellowish brown, silty clay / clayey silt. Observed kankar.		4 6 8 (14)	DS–1 SPT–1	0.50 1.00–1.45
		4 5 9 (14)	UDS–1 SPT–2	2.00–2.45 2.45–2.90
2.90m Hard, brownish grey, silty clay / clayey silt with decomposed rock & mica.		7 15 28 (43)	SPT–3	3.30–3.75
		31 69 >100 (5.0 cm Pentn.)	SPT–4	4.00–4.20
4.45m		100 (Refusal) 5.0 cm Pentn.	*SPT–5 *SPT–6	4.30–4.35 4.45–4.48
Highly weathered, brownish grey, medium grained, highly fractured, alternation of sandstone & shale. 5.00m		100 (Refusal) 3.0 cm Pentn.	R1	CR=23% RQD=Nil 4.45 – 5.00
		NX rotary drilling from 4.45m to 25.00m	R2	CR=28% RQD=Nil 5.00 – 5.75
			R3	CR=29% RQD=16% 5.75 – 6.50
			R4	CR=24% RQD=Nil 6.50 – 7.25
			R5	CR=30% RQD=16% 7.25 – 8.00
			R6	CR=34% RQD=22% 8.00 – 8.75
Highly to moderately weathered, brownish grey to light blackish grey, medium to fine grained, highly to moderately fractured, alternation of sandstone & shale.			R7	CR=38% RQD=16% 8.75 – 9.50
			R8	CR=40% RQD=Nil 9.50 – 10.25
			R9	CR=45% RQD=Nil 10.25 – 11.00
			R10	CR=48% RQD=20% 11.00 – 11.75
			R11	CR=44% RQD=32% 11.75 – 12.50
			R12	CR=52% RQD=16% 12.50 – 13.25
			R13	CR=48% RQD=Nil 13.25 – 14.00
14.00m Moderately weathered, brownish grey to light blackish grey, medium to fine grained, highly to moderately fractured, alternation of sandstone & shale.			R14	CR=58% RQD=49% 14.00 – 14.75
			R15	CR=52% RQD=32% 14.75 – 15.50
15.50m			R16	CR=50% RQD=45% 15.50 – 16.25
16.30m				

BH–18/Sheet–1

Project : G/I for 3x660MW North Karanpura Super Thermal Power Project, Jharkhand. CETEST

Job No : 3401 | Created by : SKD | Created on : 23/12/2014 | Sheet No:

BORE LOG DATA SHEET — BORE HOLE NO.18 — Co-ordinates E=7939 N=11853

Field Test	Nos	Samples	Nos
Penetrometer (SPT)	6	Undisturbed (UDS)	1
Cone (Pc)		Penetrometer (SPT)	6
Vane (V)		Disturbed (DS)	1
		Water Sample (WS)	0

Commencement Date : 14/12/2014
Completion Date : 15/12/2014
Bore Hole Diameter : 150mm / NX.
Level Of Ground : 458.447 m.
Water Struck At :
Standing Water Level : 3.40 m.

DESCRIPTION	SYMBOL	N-VALUE (EACH DIVN. = 15cm)	SAMPLES Ref. No	SAMPLES Depth (m)
16.30m. Moderately weathered, brownish grey to light blackish grey, medium to fine grained, highly to moderately fractured, alternation of sandstone & shale. 17.75m.			R17	CR=52% RQD=Nil 17.00
			R18	CR=50% RQD=Nil 17.75
			R19	CR=52% RQD=17% 18.50
			R20	CR=50% RQD=32% 19.25
			R21	CR=52% RQD=13% 20.00
			R22	CR=57% RQD=Nil 20.75
Moderately to slightly weathered, light blackish grey, fine grained, moderately fractured, alternation of sandstone & shale.			R23	CR=56% RQD=13% 21.50
			R24	CR=62% RQD=25% 22.25
			R25	CR=65% RQD=25% 23.00
			R26	CR=67% RQD=21% 23.75
			R27	CR=66% RQD=24% 24.50
25.00m.			R28	CR=68% RQD=29% 25.00

N.B. – '*' means sample could not be recovered.

BH-18/Sheet-2

Project : G/I for 3x660MW North Karanpura Super Thermal Power Project, Jharkhand. CETEST

Job No : 3401	Created by : SKD	Created on : 17/12/2014	Sheet No:

BORE LOG DATA SHEET — BORE HOLE NO.22

Co-ordinates E=7937 N=11798

Field Test	Nos	Samples	Nos
Penetrometer (SPT)	5	Undisturbed (UDS)	2
Cone (Pc)		Penetrometer (SPT)	5
Vane (V)		Disturbed (DS)	1
		Water Sample (WS)	0

Commencement Date : 01/12/2014
Completion Date : 05/12/2014
Bore Hole Diameter : 150mm / NX.
Level Of Ground : 457.457 m.
Water Struck At :
Standing Water Level : 2.3 m.

DESCRIPTION	SYMBOL	N-VALUE (EACH DIVN. = 15cm)	SAMPLES Ref. No	SAMPLES Depth (m)
0.00m Stiff, yellowish brown, silty clay / clayey silt. Observed kankar & sand mixture.		3 4 5 (9) 3 5 6 (11)	DS-1 SPT-1 UDS-1 SPT-2	0.50 1.00-1.45 2.00-2.45 2.45-2.90
3.70m Hard, brownish grey, silty clay / clayey silt with decomposed rock.		24 76 (>100) 11.0 cm Pentn. Refusal 100 (>100) 5.0 cm Pentn. Refusal	*UDS-2 SPT-3 *SPT-4 *SPT-5	3.60-3.70 3.70-3.96 4.60-4.65 5.00-5.03
5.00m Highly weathered, brownish grey, fine grained, highly fractured sand stone.		100 (>100) 3.0 cm Pentn. Refusal NX rotary drilling from 5.00m to 29.50m	R1 R2 R3 R4 R5 R6	5.00 CR=40% RQD=Nil 5.75 CR=32% RQD=Nil 6.50 CR=27% RQD=Nil 7.25 CR=23% RQD=Nil 8.00 CR=25% RQD=Nil 8.75 CR=20% RQD=Nil
7.25m Completely to highly weathered, brownish grey, fine grained sand stone.				
9.50m Highly weathered, brownish grey, fine grained sand stone.			R7	9.50 CR=34% RQD=Nil
10.25m Highly weathered, light grey, fine grained, highly fractured sand stone.			R8 R9 R10	10.25 CR=33% RQD=Nil 11.00 CR=35% RQD=Nil 11.75 CR=40% RQD=Nil
12.50m Moderately weathered, light blackish grey, fine grained, moderately fractured alternation of sandstone & shale. 13.25m			R11 R12	12.50 CR=49% RQD=32% 13.25 CR=51% RQD=28%
Moderately to slightly weathered to fresh, light blackish grey, fine grained, medium to slightly fractured alternation of sandstone & shale. 15.10m			R13	14.00 CR=59% RQD=49% 14.75

BH-22/Sheet-1

Project : G/I for 3x660MW North Karanpura Super Thermal Power Project, Jharkhand. CETEST

Job No : 3401	Created by : SKD	Created on : 17/12/2014	Sheet No:

BORE LOG DATA SHEET — BORE HOLE NO.22

Co-ordinates E=7937 N=11798

Field Test	Nos	Samples	Nos
Penetrometer (SPT)	5	Undisturbed (UDS)	2
Cone (Pc)		Penetrometer (SPT)	5
Vane (V)		Disturbed (DS)	1
		Water Sample (WS)	0

Commencement Date : 01/12/2014
Completion Date : 05/12/2014
Bore Hole Diameter : 150mm / NX.
Level Of Ground : 457.457 m.
Water Struck At :
Standing Water Level : 2.3 m.

DESCRIPTION	SYMBOL	N-VALUE (EACH DIVN. = 15cm)	SAMPLES Ref. No	SAMPLES Depth (m)
15.10m				
			R14	CR=57% RQD=44% 15.50
			R15	CR=59% RQD=47% 16.25
			R16	CR=61% RQD=16% 17.00
			R17	CR=63% RQD=19% 17.75
			R18	CR=67% RQD=31% 18.50
			R19	CR=65% RQD=51% 19.25
			R20	CR=60% RQD=16% 20.00
			R21	CR=69% RQD=48% 20.75
			R22	CR=73% RQD=35% 21.50
			R23	CR=68% RQD=17% 22.25
			R24	CR=74% RQD=23% 23.00
			R25	CR=75% RQD=32% 23.75
			R26	CR=72% RQD=40% 24.50
			R27	CR=76% RQD=52% 25.25
			R28	CR=69% RQD=57% 26.00
			R29	CR=64% RQD=54% 26.75
			R30	CR=73% RQD=50% 27.50
			R31	CR=85% RQD=58% 28.25
			R32	CR=88% RQD=56% 29.00
			R33	CR=87% RQD=62% 29.50
Moderately to slightly weathered / fresh, light blackish grey, fine grained, medium to slightly fractured alternation of sandstone & shale.				
29.50m				
N.B. – '*' means sample could not be recovered.				

BH-22/Sheet-2

Project : G/I for 3x660MW North Karanpura Super Thermal Power Project, Jharkhand. CETEST

Job No : 3401	Created by : SKD	Created on : 23/12/2014	Sheet No:

BORE LOG DATA SHEET — BORE HOLE NO.24

Co-ordinates E=7925 N=11783

Field Test	Nos	Samples	Nos
Penetrometer (SPT)	7	Undisturbed (UDS)	3
Cone (Pc)		Penetrometer (SPT)	7
Vane (V)		Disturbed (DS)	1
		Water Sample (WS)	0

Commencement Date : 06/12/2014
Completion Date : 10/12/2014
Bore Hole Diameter : 150mm / NX.
Level Of Ground : 457.219 m.
Water Struck At :
Standing Water Level : 2.40 m.

DESCRIPTION	SYMBOL	N-VALUE (EACH DIVN. = 15cm)	SAMPLES Ref. No	SAMPLES Depth (m)
0.00m				
		2 3 5 (8)	DS-1	0.50
			SPT-1	1.00-1.45
Stiff, brownish grey, silty clay / clayey silt. Observed kankar & sand mixture.		3 5 5 (10)	UDS-1	2.00-2.45
			SPT-2	2.45-2.90
		3 5 6 (11)	UDS-2	3.50-3.95
			SPT-3	3.95-4.40
5.10m				
		11 19 22 (41)	*UDS-3	5.20-5.32
Hard, brownish grey, silty clay / clayey silt with mica & decomposed rock.			SPT-4	5.32-5.77
		17 36 47 (>100) 10.0 cm Pentn.	SPT-5	6.20-6.60
		100 Refusal 5.0 cm Pentn.	*SPT-6	6.80-6.85
7.00m			*SPT-7	7.00-7.03
Highly weathered, brownish grey, fine grained, highly fractured sandstone.		100 Refusal 3.0 cm Pentn.	R1	CR=23% RQD=Nil (7.00)
7.75m		NX rotary drilling from 7.00m to 30.00m	R2	CR=27% RQD=13% (7.75)
			R3	CR=28% RQD=Nil (8.50)
			R4	CR=29% RQD=Nil (9.25)
			R5	CR=25% RQD=Nil (10.00)
Highly to moderately weathered, brownish grey, fine grained, highly fractured sandstone.			R6	CR=32% RQD=Nil (10.75)
			R7	CR=35% RQD=Nil (11.50)
			R8	CR=36% RQD=13% (12.25)
			R9	CR=49% RQD=Nil (13.00)
			R10	CR=40% RQD=Nil (13.75)
14.50m			R11	CR=49% RQD=Nil (14.50)
Highly to moderately weathered, brownish grey, fine grained, highly fractured, alternation of sandstone & shale. 15.25m			R12	CR=56% RQD=29% (15.25)
16.30m				(16.00)

BH-24/Sheet-1

Project : G/I for 3x660MW North Karanpura Super Thermal Power Project, Jharkhand. CETEST

Job No : 3401 | Created by : SKD | Created on : 23/12/2014 | Sheet No:

BORE LOG DATA SHEET — BORE HOLE NO.24

Co-ordinates E=7925 N=11783

Field Test	Nos	Samples	Nos
Penetrometer (SPT)	7	Undisturbed (UDS)	3
Cone (Pc)		Penetrometer (SPT)	7
Vane (V)		Disturbed (DS)	1
		Water Sample (WS)	0

Commencement Date : 06/12/2014
Completion Date : 10/12/2014
Bore Hole Diameter : 150mm / NX.
Level Of Ground : 457.219 m.
Water Struck At :
Standing Water Level : 2.40 m.

DESCRIPTION	SYMBOL	N-VALUE (EACH DIVN. = 15cm)	SAMPLES Ref. No	SAMPLES Depth (m)
16.30m				
			R13	CR=63% RQD=43% 16.75
			R14	CR=67% RQD=51% 17.50
			R15	CR=69% RQD=65% 18.25
			R16	CR=65% RQD=16% 19.00
			R17	CR=71% RQD=48% 19.75
			R18	CR=65% RQD=16% 20.50
			R19	CR=69% RQD=Nil 21.25
			R20	CR=72% RQD=Nil 22.00
Moderately to slightly weathered to fresh, light blackish grey, fine grained, moderately fractured, alternation of sandstone & shale.			R21	CR=76% RQD=Nil 22.75
			R22	CR=80% RQD=45% 23.50
			R23	CR=76% RQD=50% 24.25
			R24	CR=78% RQD=46% 25.00
			R25	CR=77% RQD=29% 25.75
			R26	CR=80% RQD=37% 26.50
			R27	CR=81% RQD=20% 27.25
			R28	CR=79% RQD=22% 28.00
			R29	CR=82% RQD=34% 28.75
			R30	CR=81% RQD=40%
30.00m				30.00

N.B. – '*' means sample could not be recovered.

BH-24/Sheet-2

Project : G/I for 3x660MW North Karanpura Super Thermal Power Project, Jharkhand. CETEST

Job No : 3401 | **Created by : SKD** | **Created on : 31/01/2015** | **Sheet No:**

BORE LOG DATA SHEET — BORE HOLE NO.105 — Co-ordinates E=7774 N=11928

Field Test	Nos	Samples	Nos
Penetrometer (SPT)	5	Undisturbed (UDS)	2
Cone (Pc)		Penetrometer (SPT)	5
Vane (V)		Disturbed (DS)	1
		Water Sample (WS)	0

Commencement Date : 10/01/2015
Completion Date : 11/01/2015
Bore Hole Diameter : 150mm / NX.
Level Of Ground : 461.519 m.
Water Struck At :
Standing Water Level : 3.0 m.

DESCRIPTION	N-VALUE (EACH DIVN. = 15cm)	SAMPLES Ref. No	Depth (m)
0.00m Very stiff, yellowish brown, silty clay. Observed kankar & sand mixture.	4 6 11 (17)	DS-1	0.50
		SPT-1	1.00-1.45
	5 8 13 (21)	UDS-1	2.00-2.45
		SPT-2	2.45-2.90
3.20m Hard, brownish grey, silty clay / clayey silt. Obs. decomposed rock.	25 52 23 (≥100) 4.0 cm Pentn.	*UDS-2	3.50-3.60
		SPT-3	3.60-3.94
	100 Refusal 5.0 cm Pentn.	*SPT-4	4.20-4.25
4.50m Highly weathered, greyish brown, fine grained, highly fractured alternation of sandstone & shale. 5.25m		*SPT-5	4.50-4.53 4.50
	100 Refusal 3.0 cm Pentn.	R1	CR=25% RQD=Nil 5.25
	NX rotary drilling from 4.50m to 20.00m	R2	CR=26% RQD=Nil 6.00
		R3	CR=29% RQD=14% 6.75
		R4	CR=28% RQD=13% 7.50
		R5	CR=35% RQD=Nil 8.25
		R6	CR=32% RQD=Nil 9.00
		R7	CR=32% RQD=19% 9.75
Highly to moderately weathered, greyish brown, fine grained, highly fractured alternation of sandstone & shale.		R8	CR=31% RQD=14% 10.50
		R9	CR=30% RQD=Nil 11.25
		R10	CR=38% RQD=16% 12.00
		R11	CR=40% RQD=28% 12.75
		R12	CR=38% RQD=Nil 13.50
		R13	CR=40% RQD=Nil 14.25
		R14	CR=42% RQD=Nil 15.00
		R15	CR=44% RQD=Nil 15.75
15.75m Moderately weathered, brownish grey, fine grained, highly fractured alternation of sandstone & shale.		R16	CR=41% RQD=Nil 16.50
		R17	CR=42% RQD=20% 17.25
		R18	CR=44% RQD=Nil 18.00
		R19	CR=37% RQD=Nil 18.75
N.B. – '*' means sample could not be recovered.		R20	CR=42% RQD=Nil 19.50
20.00m		R21	CR=48% RQD=14% 20.00

BH-105/Sheet-1

Project : G/I for 3x660MW North Karanpura Super Thermal Power Project, Jharkhand. CETEST

Job No : 3401 | **Created by : SKD** | **Created on : 31/01/2015** | **Sheet No:**

BORE LOG DATA SHEET — BORE HOLE NO.109 — Co-ordinates E=7763 N=12110

Field Test	Nos	Samples	Nos
Penetrometer (SPT)	5	Undisturbed (UDS)	1
Cone (Pc)		Penetrometer (SPT)	5
Vane (V)		Disturbed (DS)	1
		Water Sample (WS)	0

Commencement Date : 08/01/2015
Completion Date : 09/01/2015
Bore Hole Diameter : 150mm / NX.
Level Of Ground : 460.577 m.
Water Struck At :
Standing Water Level : 3.0 m.

DESCRIPTION	N-VALUE (EACH DIVN. = 15cm)	SAMPLES Ref. No	SAMPLES Depth (m)
0.00m Stiff, yellowish brown, silty clay. Observed kankar.	3 4 7 (11)	DS-1 SPT-1	0.50 1.00-1.45
1.90m Stiff, yellowish brown, silty clay / clayey silt with sand mixture & mica. Obs. decomposed rock.	3 6 8 (14)	UDS-1 SPT-2	2.00-2.45 2.45-2.90
	3 16 67 (≥100) 13.0 cm Penetn.	SPT-3	3.20-3.48
3.75m Highly weathered, brownish grey, fine grained, highly fractured sandstone.	100 Refusal 5.0 cm Penetn.	*SPT-4 *SPT-5	3.60-3.65 3.75-3.78
4.50m	100 Refusal 3.0 cm Penetn.		
	NX rotary drilling from 3.75m to 15.00m		
Highly weathered, brownish grey to light blackish grey, fine grained, highly fractured alternation of sandstone & shale.		R1 R2 R3 R4 R5 R6 R7 R8 R9 R10 R11 R12 R13 R14 R15	CR=25% RQD=Nil 3.75-4.50 CR=28% RQD=Nil 4.50-5.25 CR=31% RQD=Nil 5.25-6.00 CR=27% RQD=Nil 6.00-6.75 CR=28% RQD=Nil 6.75-7.50 CR=27% RQD=Nil 7.50-8.25 CR=30% RQD=Nil 8.25-9.00 CR=33% RQD=Nil 9.00-9.75 CR=35% RQD=Nil 9.75-10.50 CR=36% RQD=Nil 10.50-11.25 CR=38% RQD=Nil 11.25-12.00 CR=41% RQD=Nil 12.00-12.75 CR=45% RQD=Nil 12.75-13.50 CR=47% RQD=18% 13.50-14.25 CR=48% RQD=14% 14.25-15.00
11.25m Highly weathered, brownish grey to light blackish grey, fine grained, highly fractured sandstone.			
12.00m Moderately weathered, greyish brown, fine grained, highly fractured sandstone.			
15.00m			

N.B. – '*' means sample could not be recovered.

BH-109/Sheet-1

Project: G/I for 3x660MW North Karanpura Super Thermal Power Project, Jharkhand. CETEST

Job No.: 3401 | Sheet No.

Res-3401G1/Page 1

Bore Hole	Sample Number	Depth M	Sample Description	Bulk Dens. gms/cc	Dry Dens. gms/cc	Spec. Grav.	Nat. Mois. %	Void Ratio	Strength Test Results Pc/Pm kg/sqcm	Shear kg/sqcm	Cohesn kg/sqcm	Frictn Deg.	Atter. Limits LL %	PL %	SL %	IS Classi fication	Grain Size Gravel %	Sand %	Silt %	Clay %	Test Method
BH01	UDS01	2.00	Brownish grey, silty clay with traces of kankars.	2.00	1.63	2.67	23 T 24 C	0.630	TRSH-UU 3.0 2.0 1.0	0.669 0.537 0.514	0.57	0				CI*		3	88	9	**See the Note
BH01	UDS02	3.50	Brownish grey, silty clay with traces of sand mixtures & kankars	2.16	1.87	2.69	16 S 16 T		UNCONFD 0.0 0.0 0.0 REMOULD 0.0 0.0 0.0	1.024 1.395 1.465 0.966 0.902 0.978	1.30 0.95	0 0	42	20	12	CI		20	76	4	Do
BH01	SPT04	5.00	Yellowish grey, silty clay with traces of fine sand mixture.													CI*		6	94 (Silt+Clay)		Do
BH02	SPT01	1.00	Yellowish grey, silty clay.										42	22		CI					Do
BH02	SPT02	2.10	Brownish grey, silty clay / clayey silt with sand mixtures.													CI*		35	65 (Silt+Clay)		Do
BH03	UDS01	1.90	Brownish grey, silty clay / clayey silt with traces of rusty spots.	1.94	1.62	2.73	19 S 20 T 20 C	0.650	TRSH-UU 3.0 2.0 1.0	1.840 1.725 1.508	1.16	8	40	25	25	CI		23	75	2	Do
BH04	SPT04	5.22	Brownish grey, silty clay / clayey silt with sand mixture.													CI*		28	72 (Silt+Clay)		Do
BH05	SPT02	2.13	Brownish grey, silty clay with decomposed rock.													CI*		26	74 (Silt+Clay)		Do
BH06	SPT02	2.12	Brownish grey, silty clay / clayey silt with decomposed rock.													CI*		29	71 (Silt+Clay)		Do
BH07	SPT02	2.13	Brownish grey, silty clay with decomposed rock.										38	15		CI					Do

Project: G/I for 3x660MW North Karanpura Super Thermal Power Project, Jharkhand. CETEST

Job No.: 3401 | Sheet No.

Res-340101 / Page 2

Bore Hole	Sample Number	Depth M	Sample Description	Bulk Dens. gms/cc	Dry Dens. gms/cc	Spec. Grav.	Nat. Mois. %	Void Ratio	Strength Test Results Pc/Pn kg/sqcm	Shear kg/sqcm	Cohesn. kg/sqcm	Frictn. Deg.	Atter. Limits LL %	PL %	SL %	IS Classi fication	Grain Size Gravel %	Sand %	Silt %	Clay %	Test Method
BH12	UDS01	2.00	Brownish grey, silty clay / clayey silt with traces of kankars.	1.94	1.55	2.63	26 S 26 T		UNCONFD 0.0 0.0 0.0 REMOULD 0.0 0.0 0.0	0.17 0.179 0.155 0.163 0.11 0.112 0.101 0.104	0.17	0	39	20	19	CI		22	73	5	Do
BH14	SPT02	2.10	Brownish grey, silty clay with sandmixtures.													CI*		35	65 (Silt+Clay)		Do
BH15	SPT02	2.09	Brownish grey, silty clay with sandmixture & mica.													CI*		21	79 (Silt+Clay)		Do
BH16	UDS01	2.00	Brownish grey, silty clay / clayey silt with traces of sandmixture.	1.96	1.68	2.70	16 S 16 T 17 C	0.495	TRSH-UU 3.0 2.0 1.0	0.498 0.428 0.380	0.44	0	30	17	17	CL		37	62	1	Do
BH17	UDS01	2.00	Yellowish brown, silty clay / clayey silt with traces of kankars.	1.97	1.58	2.64	26 S 25 T		TRSH-UU 3.0 2.0 1.0	1.694 1.528 1.346	1.52	0				CI*		33	64	3	Do
BH18	UDS01	2.00	Yellowish brown, silty clay / clayey silt with traces of kankars.	1.68	1.41	2.69	19 S 19 T		UNCONFD 0.0 0.0 0.0 REMOULD 0.0 0.0 0.0	0.342 0.433 0.440 0.244 0.313 0.301	0.41 0.29	0 0	43	19	14	CI		21	77	2	Do
BH19	UDS01	2.00	Brownish grey, silty clay with traces of kankars.	2.12	1.85	2.65	13 S 15 T		UNCONFD 0.0 0.0 0.0 REMOULD 0.0 0.0 0.0	1.416 2.100 1.653 1.406 1.302 1.186	1.72 1.30	0 0	38	18		CI		8	81	11	Do

Project: G/I for 3x660MW North Karanpura Super Thermal Power Project, Jharkhand. CETEST

Job No. : 3401 | **Sheet No.**

Res-340101 / Page 3

Bore Hole	Sample Number	Depth M	Sample Description	Bulk Dens. gms/cc	Dry Dens. gms/cc	Spec. Grav.	Nat. Mois. %	Void Ratio	Strength Test Results Pc/Pn kg/sqcm	Shear kg/sqcm	Cohesn kg/sqcm	Frictn Deg.	After Limits LL %	PL %	SL %	IS Classification	Grain Size Gravl %	Sand %	Silt %	Clay %	Test Method
BH19	SPT06	6.00	Brownish grey, silty clay / clayey silt with sand mixtures.													CI*		38	62 (Silt+Clay)		Do
BH20	UDS01	2.00	Yellowish grey, silty clay / clayey silt with traces of sand mixtures.	2.01	1.71	2.70	18 S 18 T		UNCONFD 0.0 0.0 0.0 REMOULD 0.0 0.0 0.0	0.649 1.217 0.858 0.884 0.649 0.646 0.641	0.99 0.64	0 0	35	19	18	CI		23	71	6	Do
BH21	UDS01	2.00	Yellowish grey, silty clay / clayey silt with traces of sand mixtures.	2.11	1.75	2.50	21 S 21 T		UNCONFD 0.0 0.0 0.0 REMOULD 0.0 0.0 0.0	0.527 0.531 0.475 0.362 0.357 0.328	0.51 0.35	0 0	38	17	12	CI		30	66	4	Do
BH22	UDS01	2.00	Brownish grey, silty clay with traces of sand mixture.	2.06	1.78	2.64	16 S 16 T 17 C	0.534	TRSH-UU 3.0 2.0 1.0 UNCONFD 0.0 0.0 0.0 REMOULD 0.0 0.0 0.0	1.617 1.594 1.104 1.013 1.058 0.905 0.694 0.674 0.612	0.71 0.99 0.66	12 0 0	30	16	17	CL		37	60	3	Do
BH22	SPT03	3.70	Brownish grey, clayey silt with sand mixture & mica.													CI*		36	64 (Silt+Clay)		Do
BH23	UDS01	2.00	Brownish grey clayey silt/ silty clay with traces of kankars.	2.11	1.84	2.72	14 S 15 T 18 C	0.542	TRSH-UU 3.0 2.0 1.0	1.911 1.831 1.774	1.84	0	40	16	14	CI		15	80	5	Do

Project: G/I for 3x660MW North Karanpura Super Thermal Power Project, Jharkhand. CETEST

Job No.: 3401 | Sheet No.

Res-340101 / Page 4

Bore Hole	Sample Number	Depth M	Sample Description	Bulk Dens. gms/cc	Dry Dens. gms/cc	Spec. Grav.	Nat. Mois. %	Void Ratio	Strength Test Results				Atter Limits			IS Classi ficatio	Grain Size				Test Method
									Pc/Pn kg/sqcm	Shear kg/sqcm	Cohesn kg/sqcm	Fricn Deg.	LL %	PL %	SL %		Gravl %	Sand %	Silt %	Clay %	
BH23	UDS02	3.50	Brownish grey clayey silt/ silty clay with traces of kankars.	2.16	1.89	2.70	15 S		UNCONFD		1.55	0	50	20	18	CH		12	86	2	Do
									0.0	1.767											
									0.0	1.306											
									0.0	1.577											
									REMOULD		1.09	0									
									0.0	1.207											
									0.0	1.075											
									0.0	0.998											
BH23	SPT05	5.60	Brownish grey, clayey silt with sand mixtures & traces of mica.													CI*		42	58	(Silt+Clay)	Do
BH24	UDS01	2.00	Yellowish grey, silty clay / clayey silt with traces of sandmixtures.	2.15	1.85	2.66	16 S	0.384	TRSH-UU		2.35	7	38	17	13	CI		20	70	10	Do
							16 T		3.0	3.126											
							15 C		2.0	2.913											
									1.0	2.833											
BH24	UDS02	3.50	Brownish grey, silty clay / clayey silt.				19 S		UNCONFD		0.52	0	38	16	12	CI					Do
									0.0	0.499											
									0.0	0.555											
									0.0	0.498											
									REMOULD		0.35	0									
									0.0	0.337											
									0.0	0.385											
									0.0	0.317											
BH24	SPT04	5.32	Brownish grey, silty clay / clayey silt with sand mixtures.													CI*		34	66	(Silt+Clay)	Do
BH25	UDS01	2.00	Brownish grey, silty clay with traces of kankars.	2.01	1.67	2.67	20 S	0.550	TRSH-UU		0.62	9	47	21	11	CI		6	80	14	Do
							20 T		3.0	1.345											
							22 C		2.0	1.054											
									1.0	0.988											
BH25	SPT03	3.62	Brownish grey, silty clay / clayey silt with sand mixtures and mica.			2.69										CI*		32	62	6	Do
BH26	UDS01	2.00	Brownish grey, silty clay with traces of rusty spots & kankars.	2.06	1.66	2.66	23 S		UNCONFD		0.65	0	48	21	16	CI		17	70	13	Do
							24 T		0.0	0.626											
									0.0	0.693											
									0.0	0.633											
									REMOULD		0.48	0									
									0.0	0.451											
									0.0	0.510											
									0.0	0.471											

Project: G/I for 3x660MW North Karanpura Super Thermal Power Project, Jharkhand. CETEST

Job No.: 3401 | Sheet No.

Res-340101 / Page 19

Bore Hole	Sample Number	Depth M	Sample Description	Bulk Dens. gms/cc	Dry Dens. gms/cc	Spec. Grav.	Nat. Mois. %	Void Ratio	Strength Test Results: Pc/Pn kg/sqcm	Shear kg/sqcm	Cohesn kg/sqcm	Frictn Deg.	Atter. Limits: LL %	PL %	SL %	IS Classification	Grain Size: Gravl %	Sand %	Silt %	Clay %	Test Method
EH103	UDS01	2.00	Yellowish brown, silty clay with decomposed rock and mica.	2.03	1.74	2.68	17 S 17 T		UNCONFD 0.0 0.0 0.0 REMOULD 0.0 0.0 0.0	0.86 0.883 0.874 0.853 0.58 0.603 0.566 0.557	0.86 0.58	0 0				CI*		37	57	6	Do
EH105	SPT03	3.60	Light grey, silty clay with fine sand mixture & mica.										37	24		CI					Do
EH106	SPT01	1.00	Yellowish grey, silty clay.										44	23		CI					Do
EH106	SPT02	2.30	Light grey, silty clay / clayey silt with fine sand mixture & mica.													CI*		21	79	(Silt+Clay)	Do
EH107	UDS01	2.00	Yellowish brown, silty clay / clayey silt with traces of kankars.	2.04	1.64	2.67	24 S 24 T						43	19	13	CI		13	80	7	Do
EH107	SPT03	3.62	Brownish grey, silty clay / clayey silt with sand mixture & mica.													CI*		39	61	(Silt+Clay)	Do
EH108	UDS01	2.00	Brownish grey, silty clay / clayey silt with traces of kankars.	2.02	1.73		17 T		UNCONFD 0.0 0.0 0.0 REMOULD 0.0 0.0 0.0	1.817 1.849 1.839 1.242 1.286 1.268	1.84 1.26	0 0				CI*					Do
EH109	SPT02	2.45	Greyish brown, silty clay.										43	21		CI					Do
EH110	SPT03	3.40	Greyish brown, silty clay / clayey silt with mica.													SM		64	36	(Silt+Clay)	Do

Project: G/I for 3x660MW North Karanpura Super Thermal Power Project, Jharkhand. CETEST

Job No.: 3401 | Sheet No.

LABORATORY ROCK TEST RESULTS

BH No.	Run No.	Depth (M)	Density (gm/cc)		Water Content	Porosity %	Specific Gravity	Unconfined Compressive strength (kg/sqcm)		Coefficient of softening	Point Load Strength Index (kg/sqcm)	Slake Durability Index (%)	Hardness (based on Mohr Scale)	Soundness (%) Loss	Deformability (kg/sqcm)	Test Method
			Bulk	Dry	(%)			In-situ	Saturated							
1	1	3.75-6.00					2.748				0.83	24.72	2.50-3.00	8.25		**See the Notes
1	10	12.50-13.25	1.983	1.911	3.743	7.155	2.589	102	20	0.196	0.90	45.48	3.00-3.50		5883	Do
2	3	4.25-5.00	2.001	1.950	2.630	5.129	2.713				0.88		3.00-3.50	2.48		Do
3	5	6.00-6.75	2.117	2.045	3.560	7.278	2.605	27			0.90	29.43			1995	Do
4	2	6.75-7.50	1.817	1.804	0.724	1.307					0.94	63.28		4.90		Do
4	12	14.25-15.00	2.285	2.239	2.053	4.598	2.347	186	50	0.269	1.21		3.50-4.00	1.25	5778	Do
5	8	9.00-9.75										11.11		10.00		
6	2	4.50-5.25									0.84		3.00-3.50	4.75		
6	8	9.00-9.75										0.00		17.29		
7	15	14.25-15.00	2.222	2.185	1.693	4.021	2.619	100	17	0.170	1.00	2.25	3.00-3.50		4752	Do
8	22	19.00-19.75	2.259	2.223	1.596	3.548	2.673	122	87	0.714	3.25	61.48	3.50-4.00	8.29		Do
9	19	16.75-17.50	2.252	2.171	3.748	8.136	2.368	176	24	0.136		63.96	3.00-3.50		6020	Do
10	1	3.00-3.75	2.013	1.972	2.081	4.105	2.057				1.25			11.25		Do
11	3	5.50-6.25							15			0.00	2.50-3.00	13.49		
12	11	11.50-12.25	2.167	2.092	3.611	7.533	2.568	75	40	0.533	1.75	44.47		9.96	2726	Do
13	7	8.50-9.25	2.242	2.193	2.228	4.885	2.305				0.97		3.00-3.50			Do
14	30	25.00-25.75	2.196	2.147	2.303	4.944	2.480	120	102	0.846	4.33	92.48	3.50-4.00	5.75	5183	Do
15	16	14.75-15.50	2.225	2.156	3.179	6.855	2.610				2.15			4.29		Do
16	14	14.50-15.25	2.254	2.183	3.248	7.092	2.580		38		1.00	70.00			4433	Do
17	15	14.00-14.75	2.257	2.215	1.905	4.221	2.499				9.57	66.67	3.00-3.50	10.00		Do
18	4	6.50-7.25	2.398	2.383	0.627	1.495	2.420				0.94		3.00-3.50			Do

Project: G/I for 3x660MW North Karanpura Super Thermal Power Project, Jharkhand. CETEST

Job No. : 3401 | **Sheet No.**

BH No.	Run No.	Depth (M)	Density (gm/cc)		Water Content	Porosity %	Specific Gravity	Unconfined Compressive strength (kg/sqcm)		Coefficient of softening	Point Load Strength Index (kg/sqcm)	Slake Durability Index (%)	Hardness (based on Mohr Scale)	Soundness (%) Loss	Deformability (kg/sqcm)	Test Method
			Bulk	Dry	(%)			In-situ	Saturated							
18	20	18.25-19.25	2.250	2.214	1.627	3.601	2.498	147	39		4.65	72.48	3.00-3.50	11.21	4705	Do
19	19	20.50-21.25	2.165	2.094	3.367	7.052	2.675	106	41	0.386				10.63	4290	Do
20	2	5.75-6.50									0.81	11.92	2.00-2.50			Do
21	15	15.00-15.75	2.343	2.283	2.627	5.998	2.428	335			5.46	86.48	3.00-3.50	4.29	12325	Do
22	2	5.75-6.50	2.165	2.123	1.996	4.238	2.630				0.95	3.69		11.92		Do
23	15	16.50-17.25	2.449	2.409	1.660	3.259	2.692	254	142		4.42	82.36	3.50-4.00		11543	
24	8	12.25-13.00	1.949	1.882	3.561	6.701	2.017	52				39.63			1344	Do
25	8	11.25-12.00	2.159	2.114	2.143	4.531	2.680	59	25		1.00	64.44	3.00-3.50	11.25	3353	Do
26	15	16.25-17.00	2.225	2.163	2.853	6.172	2.306		47		3.21			4.82	3149	Do
27	17	15.25-16.00	2.150	2.091	2.797	5.850	2.221	86	42	0.488		31.92	3.00-3.50		2895	Do
28	3	5.50-6.50	2.068	2.041	1.346	2.747	2.098				0.84			3.36		Do
29	26	28.75-29.25	2.334	2.298	1.591	3.656	2.385	243	196	0.810	10.49	91.11	3.00-3.50	4.83	13423	Do
30	1	7.25-8.00	1.885	1.847	2.048	3.783	2.649				0.82		3.00-3.50			Do
30	8	12.50-13.25	2.169	2.132	1.713	3.652	2.213	151	27	0.179		41.48			5078	Do
31	4	6.25-7.00	1.985	1.944	2.090	4.063	2.027				0.94	49.73		3.63		Do
32	20	25.75-27.25	2.333	2.304	1.241	2.859	2.372	335	100	0.298		58.99	3.00-3.50		11441	Do
33	11	11.50-12.25	2.143	2.087	2.715	5.665	2.482				1.25	44.47	3.00-3.50	4.92		Do
34	13	12.75-13.50	2.112	2.045	3.247	6.641	2.191	102	25	0.245	1.00		3.50-4.00		3001	Do
35	3	4.75-5.50	2.110	2.078	1.565	3.252	2.419				0.94	11.43	2.50-3.0	12.00		Do
36	30	24.75-25.50	2.290	2.260	1.343	3.035	2.330	264	138	0.533		72.49	3.00-3.50		15501	Do
37	28	25.25-26.00	2.351	2.314	1.588	3.674	2.402	242	140	0.579	4.82	63.48	3.00-3.50	7.63	7559	Do
38	17	14.75-15.50	2.324	2.277	2.046	4.658	2.388	172	48	0.279					7815	Do

Project: G/I for 3x660MW North Karanpura Super Thermal Power Project, Jharkhand. CET

Job No.: 3401 | **Sheet No.**

BH No.	Run No.	Depth (Mt)	Density (gm/cc)		Water Content	Porosity %	Specific Gravity	Unconfined Compressive strength (kg/sqcm)		Coefficient of softening	Point Load Strength Index (kg/sqcm)	Slake Durability Index (%)	Hardness (based on Mohr Scale)	Soundness (%) Loss	Deformability (kg/sqcm)	Test Method
			Bulk	Dry	(%)			In-situ	Saturated							
89	21	19.00-20.00	2.390	2.337	2.241	5.237	2.751		31		0.93	74.85	3.00-3.50		5757	Do
90	22	18.25-19.00	2.163	2.146	0.762	1.637	2.336	183	75	0.410					2597	Do
91	3	5.50-6.25									0.90	0.00	2.50-3.00	15.29		Do
96	6	9.25-10.00									0.92	5.00	2.50-3.00	8.29		Do
98	2	4.25-5.00										0.00		13.00		Do
99	2	5.25-6.00	2.144	2.087	2.731	6.444	2.444				0.82	7.25	3.00-3.50	7.76		Do
100	2	4.00-4.75										0.00	3.00-3.50	14.50		Do
100	7	7.75-8.50									0.82	44.48		7.72	407	Do
109	1	3.75-4.50									0.82		2.00-2.30			Do
109	6	7.50-8.25										0.00	3.00-3.50	12.25		Do
111	9	10.00-10.75	2.171	2.133	1.818	3.877	2.660	184			0.82	63.56	3.00-3.50		6593	Do
112	26	27.50-28.30	2.290	2.261	1.304	2.947	2.639	349	87	0.248			3.50-4.00		7346	Do
113	22	18.75-19.50	2.103	1.922	9.382	18.036	2.345				0.92	63.91		4.30		Do
114	23	19.50-20.25	2.274	2.220	2.463	5.466	2.348	166	49	0.295	1.33		3.50-4.00		6902	Do
115	16	14.25-15.00	1.693	1.639	3.290	5.391					1.04	42.36		5.33		Do
116	20	17.00-17.75	2.241	2.166	3.445	7.462	2.341	144	9	0.063	1.25		3.00-3.50		407	Do
117	18	17.50-18.25	2.278	2.233	1.988	4.439	2.543	120	38	0.317		55.69	3.00-3.50	2.36	5633	Do
119	10	9.75-10.30	2.126	2.064	3.024	6.241	2.201				1.04	42.57		1.00		Do

Project: G/I for 3x660MW North Karanpura Super Thermal Power Project, Jharkhand CETEST

Job No. : 3401 | Sheet No.

APPARENT RESISTIVITY VALUES

ERT No. 01

Sl No.	S (M)	Apparent Electrical Resistivity (Ohm-m)				
		(N - S)	(E - W)	(NE - SW)	(NW - SE)	Mean
1	1.0	32.14	33.53	31.76	32.08	32.38
2	2.0	25.89	30.67	28.79	26.52	27.97
3	3.0	22.63	31.87	29.43	23.20	26.78
4	4.0	25.64	33.94	27.91	28.16	28.91
5	5.0	22.63	34.89	31.74	28.29	29.39
6	7.0	23.76	36.08	32.56	19.80	28.05
7	10.0	27.03	39.60	37.09	20.12	30.96

Mean Resistivity at ERT-01 is 29.21 m.

ERT No. 02

Sl No.	S (M)	Apparent Electrical Resistivity (Ohm-m)				
		(N - S)	(E - W)	(NE - SW)	(NW - SE)	Mean
1	1.0	47.18	49.82	43.72	45.29	46.50
2	2.0	42.86	36.70	21.62	26.40	31.90
3	3.0	28.67	20.76	36.40	19.43	26.32
4	4.0	30.67	31.93	26.40	24.64	28.41
5	5.0	30.80	28.29	30.49	28.29	29.47
6	7.0	35.64	29.48	30.36	30.80	31.57
7	10.0	37.72	32.06	28.82	33.32	32.98

Mean Resistivity at ERT-02 is 32.45 m.

ERT No. 03

Sl No.	S (M)	Apparent Electrical Resistivity (Ohm-m)				
		(N - S)	(E - W)	(NE - SW)	(NW - SE)	Mean
1	1.0	35.16	16.10	33.34	32.70	29.33
2	2.0	30.42	27.65	35.20	27.65	30.23
3	3.0	35.46	26.03	47.15	26.40	33.76
4	4.0	32.43	27.65	41.73	41.48	35.82
5	5.0	37.72	19.17	40.23	40.86	34.50
6	7.0	29.92	24.64	61.16	42.68	39.60
7	10.0	32.69	19.49	62.23	21.37	33.95

Mean Resistivity at ERT-03 is 33.88 m.

ERT No. 04

Sl No.	S (M)	Apparent Electrical Resistivity (Ohm-m)				
		(N - S)	(E - W)	(NE - SW)	(NW - SE)	Mean
1	1.0	23.96	26.17	21.07	21.70	23.23
2	2.0	24.51	24.51	23.00	23.88	23.98
3	3.0	26.40	26.78	26.97	27.72	26.97
4	4.0	28.91	30.67	28.66	28.16	29.10
5	5.0	29.86	40.23	33.32	29.23	33.16
6	7.0	30.36	41.36	34.76	38.72	36.30
7	10.0	31.43	39.60	37.09	40.23	37.09

Mean Resistivity at ERT-04 is 29.97 m.

Project: G/I for 3x660MW North Karanpura Super Thermal Power Project, Jharkhand CETEST

Job No. : 3401 | Sheet No.

ERT No. 05

Sl No.	S (M)	Apparent Electrical Resistivity (Ohm-m)				
		(N - S)	(E - W)	(NE - SW)	(NW - SE)	Mean
1	1.0	21.83	21.57	23.71	20.25	21.84
2	2.0	20.74	18.60	18.60	18.23	19.04
3	3.0	17.92	16.79	18.11	18.67	17.87
4	4.0	20.11	19.86	19.36	19.36	19.67
5	5.0	21.06	20.74	19.80	18.54	20.04
6	7.0	24.64	22.88	22.88	21.12	22.88
7	10.0	23.89	23.89	27.66	24.52	24.99

Mean Resistivity at ERT-05 is 20.90 m.

ERT No. 06

Sl No.	S (M)	Apparent Electrical Resistivity (Ohm-m)				
		(N - S)	(E - W)	(NE - SW)	(NW - SE)	Mean
1	1.0	16.17	16.23	19.00	16.23	16.91
2	2.0	16.47	16.59	17.10	17.22	16.85
3	3.0	17.54	21.50	22.63	36.59	24.57
4	4.0	21.12	26.15	23.13	20.87	22.82
5	5.0	24.83	27.66	23.26	20.74	24.12
6	7.0	27.28	30.36	26.40	27.28	27.83
7	10.0	29.54	28.29	30.80	29.54	29.54

Mean Resistivity at ERT-06 is 23.23 m.

ERT No. 07

Sl No.	S (M)	Apparent Electrical Resistivity (Ohm-m)				
		(N - S)	(E - W)	(NE - SW)	(NW - SE)	Mean
1	1.0	18.81	19.18	20.76	19.81	19.64
2	2.0	22.75	20.87	23.00	23.63	22.56
3	3.0	24.90	26.03	25.46	25.84	25.56
4	4.0	25.14	22.63	26.65	44.50	29.73
5	5.0	26.09	26.72	28.60	29.23	27.66
6	7.0	32.56	22.44	26.40	27.72	27.28
7	10.0	33.94	30.17	33.32	32.69	32.53

Mean Resistivity at ERT-07 is 26.42 m.

ERT No. 08

Sl No.	S (M)	Apparent Electrical Resistivity (Ohm-m)				
		(N - S)	(E - W)	(NE - SW)	(NW - SE)	Mean
1	1.0	38.43	36.92	32.27	36.48	36.03
2	2.0	23.13	14.83	15.84	15.46	17.32
3	3.0	21.50	21.12	18.48	21.50	20.65
4	4.0	19.86	21.12	18.60	25.14	21.18
5	5.0	15.40	20.74	21.37	26.40	20.98
6	7.0	20.24	26.40	25.08	28.16	24.97
7	10.0	23.89	26.40	34.57	25.14	27.50

Mean Resistivity at ERT-08 is 24.09 m.

SUB-SECTION-V-Q

QUALITY ASSURANCE

MECHANICAL SYSTEM

SUB-SECTION-V-QM1

FLUE GAS DESULPHURISATIN SYSTEM

1.00.0	**FLUE GAS DESULPHURISATION SYSTEM**
1.01.0	**M□□□:**
1.01.01	Raw material for shaft, coupling, gears and pinions, Mill Heads ,top and bottom races and other rotating components shall be subjected to UT & Base frame for MPI. MPI/LPI shall be carried out to check surface soundness. Rubber wear lining of Mill Shell shall be checked for shore hardness. For Central driven ball mill shall be run tested (without grinding media) for 30 min at shop to check unusual noise and vibration.
1.01.02	Butt welds in the tube/separator/body casing of the mill shall be tested by RT and MPI. All other welds in main tube/separator shall be tested by MPI/LPI for acceptance. The tube shall be statically balanced.
1.01.03	All gearboxes shall be run tested for adequate duration to check rise in oil temperature, noise level and vibration. Check for leak tightness of gear case also shall be performed.
1.02.0	**F□□d□r□:**
1.02.01	Any welds in the casing/pulley fabrication shall be checked with MPI.
1.02.02	Routine tests shall be done as per relevant Indian Standards or equivalent International Standards.
1.02.03	All major items like plates for casing, head pulley, tail pulley, pulley shaft and major castings shall be procured with respective material test certificates.
1.02.04	Calibration check shall be carried out on all feeders.
1.0□.0	**D□□ □□r□:**
1.03.01	All the dampers shall be subjected to operational test/checks.
1.03.02	Gas tight Dampers shall be subjected to shop leakage test to demonstrate the guaranteed tightness as per NTPC Tech Specification.
1.04.0	**PIPING□□AL□E AND SPECIALITIES:**
1.04.01	All pipes and fittings shall be tested as per applicable code.
1.04.02	All valves shall be hydraulically/Air tested for body, seat and back-seat (if applicable) as per relevant standard.
1.04.03	NDT on valves shall be as per relevant standard.
1.04.04	Valves shall be offered for hydro test in unpainted conditions.
1.04.05	Functional checks of the valves for smooth opening and closing shall also be done.

1.0□.00	**TANKS □□ESSELS:**
1.0□.01	**A□□ □□□□□r□□ □□□□□:**
	i) All welds joints shall be DP tested and complete tanks shall be water fill tested. ii) All atmospheric storage tanks fabricated and erected at site shall be subjected to tests (water fill test, NDT and Vacuum box test) according to design code as applicable. iii) Rubber lining shall be tested for hardness and spark test, as applicable.
1.0□.02	**Pr□□□□r□ □□□□□□□:**
	1) NDT on weld joint shall be as per respective code requirements or the minimum as specified as below: i) 100% DPT on root run of butt weld, nozzle welds and finished fillet welds. ii) 10% DPT on all finished butt welds. iii) 10% RT (covering all 'T'/cross joints) of butt welds. 2) Butt welds of dished ends shall be stress relieved and subjected to 100% RT. 3) Each finished vessels shall be hydraulically tested to 150% of the design pressure for a duration of 30 minutes.
1.0□.0	**PUMPS:**
1.07.01	UT on shaft forgings (greater or equal to 40mm) and MPI/DPT shall be done on shafts and impeller to ensure freedom from defects.
1.07.02	The pump casing shall be hydraulically tested at 200% of pump rated head or at 150% of shut off head, whichever is higher. The test pressure shall be maintained for at least half an hour.
1.07.03	The pump rotating parts shall be subjected to static and dynamic balancing.
1.07.04	All pumps shall be tested at shop for capacity, head efficiency and brake horse power at rated speed as per relevant/applicable standard.
1.07.05	Noise and vibration shall be measured during the performance testing at shop.
1.0□.0	**STRUCTURES □DUCTS□HOPPERS:**
1.08.01	All materials shall be tested for chemical and mechanical properties as per relevant standard. All plates above 40mm shall be 100% Ultrasonically tested.
1.08.02	Visual inspection of all welds shall be performed in accordance with AWSD1.1.
1.08.03	NDT requirements of structural steel welds shall be as under:

	i) 100% RT/UT on butt-welds of plate thickness>= 32mm. ii) For plates of 25mm<=thickness<32mm-10% RT and 100% MPI. iii) For plates of thickness <25mm-10% MPI/LPI.
1.08.04	Edge for shop and field weld shall be examined by MPI for plate thickness >= 32mm.
1.0□.0	**□ACUUM BELT FILTER SYSTEM:**
1.09.01	Impeller, casing and shaft of vacuum pumps shall be tested for chemical and mechanical properties as per relevant standard. All plates above 40mm shall be 100% Ultrasonically tested.
1.09.02	UT on shaft (if greater or equal to 40mm) and impeller shall be carried out.
1.09.03	All vacuum pumps shall be tested at shop for capacity, power, pressure, efficiency, noise and vibration etc.
1.09.04	Filter cloths and belts shall be tested for physical properties as per relevant standard
1.10.0	**SPRAY NO□□LES:**
1.10.01	Spray nozzles shall be tested for physical properties
1.10.02	Spray nozzles also shall be subjected to performance test.
1.11.0	**AGITATORS:**
1.11.01	Rubber lining shall be tested for hardness and spark test
1.11.02	Impellers shall be tested for dimensional and balancing check
1.11.03	Gear Boxes shall be tested for run test as per standard practice
1.12.0	**FANS:**
1.12.01	Rotor components shall be subjected to ultrasonic test at mill and magnetic particle inspection / liquid penetrant examination after rough machining.
1.12.02	Butt welds in rotor components shall be subjected to 100% RT and all welds shall be magnetic particle/dye penetrant tested after stress relieving.
1.12.03	All rotating components and assemblies of fan shall be balanced dynamically
1.12.04	Performance test shall be carried out on fans as per Technical specification/ Relevant standard.
1.12.05	Test for Natural Frequency and hardness of Fans blades shall be carried out as per Technical specification/ Relevant standard

1.1□.0 **T□□r□ □□I□□□□m□□□L□□□□m□ □ C□dd□□:**

(a) **L□□□m r□□□ □□□d□d □ □□r□□□ □□:**

LRB mattresses/sections of Rockwool/ Glasswool shall conform to & tested as per relevant clauses of Indian Standards and shall meet the requirements of NTPC data sheet. Type tests except Thermal Conductivity shall be regularly carried out once in three months, Thermal Conductivity Type Test shall be carried out minimum once in twelve months by the manufacturer. Requirements of various components like Binding wires, Lacing wires, Wire mesh, etc. shall be as per NTPC approved data sheet / as given in respective Sub-Section of Technical Requirements of Steam Generator & Auxiliaries.

(b) **L□□□□m□ □ C□dd□□:**

All insulation shall be protected by means of an outer covering of Aluminium sheeting confirming to ASTM B-209-1060 temper H14 from reputed manufacturer meeting the requirements of NTPC data sheet.

1.14.0 **O□d□□□□ B□□ □r**

- Physical and chemical property of the shaft, gears, impeller to be checked.
- Rotor assembly to be dynamically balanced.
- Performance test of the blower to be carried out at shop.
- Vibration, noise, bearing temperature check, visual and dimensional check of the blower.

1.15.0 **R□□□□r □d F□□□□ L□□□□ □□S□□:**

- The surface shall be properly blast cleaned to the Standard SA 2 ½ or better / Technical specification.
- Check DFT or thickness of coating and perform adhesion test.
- Perform Spark test shall be carried.
- Necessary field checked shall be carried out as per NTPC Tech specification/ relevant procedure.

1.16.0 **R□□□□r L□□□□ □□P□□ :**

The lining shall be checked for adhesion test , Shore hardness, thickness of coating etc. Spark test. Sample rubber compound shall be tested for Tensile, Elongation, Resistance to Bleeding.

1.1□.0 **OTHER CRITICAL EQUIPMENTS:**

Checks/ NDTs shall be done as per relevant Indian Standards or equivalent International Standards.

SUB-SECTION-V-QM2

LIME STONE □ GYPSUM HANDLING

L□□ □ □ G□□□□□ H□□d□□□□

1.01.00	**Br□□□□ □□d C□□□ □□ :**
1.01.01	Final testing of brakes shall include load, HV/IR & heat run tests.
1.02.00	**M□□□r□□□□ □□d H□□□□□**
1.02.01	All electric hoist shall be tested as per IS 3938 and chain pulley block shall be tested as per IS 3832.
1.0□.00	**H□□□□r□ □ L□□□r□**
1.03.01	Rack & Pinion Gates/Flap Gates/Rod Gates a) MPI/DP test shall be conducted on rack and pinion / rod / weld joint b) Functional checks on the gates shall be carried out alongwith respective actuator, if applicable.
1.04.00	**S□□r□□□ S□□□**
1.04.01	All material shall be tested for Chemical & Mechanical properties as per relevant standard. MPI/DP test on welding shall be carried out. Fit up assembly checks shall be carried out at shop for all despatchable segments
1.04.02	Bag Filters : Leakage test shall be carried out for pressure parts. Pulsing and sequential test on bag filter shall be done.
1.0□.00	**B□□□C□□□□□□r S□□□□□**
	The details of the checks to be carried out in the various equipments are to be submitted by the Contractor for Owner's approval. However, some indicative checks on different items are given below which should necessarily form a part of the Quality Assurance Plan to be agreed with the Owner.
1.0□.01	**Id□□r□**
	a) Check for run out and free movement shall be carried out on idlers. Run out shall be restricted as per IS:8598 b) Test for dust proofness, water proofness and dynamic friction factor of the Idlers shall be conducted at shop. The detailed procedures for the same shall be submitted for review and approval.
1.0□.02	**B□□□□□□**
	(a) Rubber cover of finished belt shall be checked for tensile strength and elongation at break before and after ageing. Rubber cover shall also be checked for abrasion, tear strength and hardness.

(b) For finished belts, checks for elongation at 10% nominal tensile strength, tensile and elongation at break in longitudinal (warp) direction and tensile in transverse (weft) direction shall be carried out.

(c) Adhesion test between ply to ply and cover to ply shall be carried out.

(d) Troughability test and Test for fire resistance shall be carried out.

(e) Test for procedure qualification for belt vulcanizing joint (at site) shall be done. Procedure for belt vulcanizing joint shall be discussed and finalized during FQP finalization.

(f) There will be a limitation on the no. of repairs allowed on the belts. Following will be the acceptance norm for the cover repairs.

i) The maximum size of a repair shall be limited to a size equivalent to one fifth the belt width. No single dimension shall exceed one fifth(1/5) of belt width.

ii) Small local repair by dough filling of size 25mm x 25mm to a limited extent shall not be counted of repairs. However, in case of cluster of repairs, same shall be counted as a patch repair.

iii) The maximum number of patch repair shall not exceed 5 per 100 mts. However, the total number of patch and dough filling repairs shall not exceed 10 per 100 meters.

(g) In addition to above, Steel Cord belt shall also be tested for following.

i. Cord dia and breaking strength

ii. Finished belt shall be tested for cord pull-out strength before and after aeging, peeling resistance.

iii. Dynamic cord pull out test

iv. Cord dia, pitch and number of cords

(h) In no case shall the cover thickness or the width of belt be less than that given in specification.

(i) For testing purpose, belt sample shall be taken from anywhere of the belt roll length offered

1.0□.0□ **B□□□□□□□□□□□□□□ M□□□□□**

a) Check for tensile strength shall be carried out on a sample vulcanized belt joint for each type of belt in shop.However if such test has been done earlier, the report for same shall be submitted for verification.

b) Complete assembly shall be tested at shop for temp. and pressure developed

1.05.04 **P**ulleys

a) In addition to chemical, mechanical, hardness, microstructure as per applicable material specification, pulleys shaft forgings shall be subjected to ultrasonic testing.

b) 100% MPI/DPT on all welds shall be conducted and 10% RT/UT on butt welds shall be conducted.

c) Static balancing of pulleys shall be carried out after rubber lagging.

d) Checks on rubber lagging to include abrasion loss, shore hardness test, peel-off strength test and physical properties. Peel-off strength shall be 10 Kg/Cm, Abrasion loss shall be less than 250 cubic mm when tested as per DIN 53516.

1.05.05 **P**ull **C**□□**rd** & **B**elt **S**way **S**witches

a. Acceptance tests

i) Over all dimension and functional test.

ii) HV & IR test

iii) Degree of protection test report.

1.05.06 Ze**r**o **S**pee**d S**witch, **U**□**d**□**r B**elt **S**witch an**d C**hute **B**lockage **S**witch

a Acceptance test

i) Burn in test at 50 degree C for 48 hours shall be done for electronic switches.

ii) Over all dimension and functional test shall be carried out.

iii) HV & IR

iv) Degree of protection test

1.06.00 **Dr**ive **E**quipments

1.06.01 **G**□□**r B**oxes **:**

(a) In addition to checks for physical, chemical, hardness,microstructure as per relevant standard, the shaft and gear/pinion forgings shall be subjected to ultrasonic testing .

(b) MPI to be carried out on Gears/Pinions after machining. Case depth, hardness and MPI after hardfacing shall be checked to ensure freedom from defects.

(c) Gear reducer shall be checked for reduction ratio, backlash and contact pattern. No load shop trial run to be conducted on gear boxes to check for oil leakage, temperature rise, noise level and vibration .

1.0□.02 **F□□□□□□ C□□□□□□**

(a) Ultrasonic testing shall be conducted on forgings for gear sleeve and gear hub, if gear coupling is provided.

(b) MPI shall be carried out after machining to ensure freedom from cracks.

1.0□.0□ **F□□d C□□□□□□**

(a) Dynamic balancing shall be carried out for the rotating parts.

(b) Check for leak tightness of the coupling shall be carried out.

(c) Functional test on fusible plug for each type of coupling shall be conducted at shop.

(d) All couplings to be run tested at shop on no load

(e) Check for temperature rise, torque-speed, torque-slip characteristics and over speed test shall be included during performance test of one coupling of each type preferably at full load.

1.0□.00 **B□□□S□□□□**

The details of the checks to be carried out in the various equipments are to be submitted by the Contractor for Employer's approval. However, some indicative checks are given below which should necessarily form a part of the quality assurance plan to be agreed with the Employer.

1.07.01 Mounting arrangement/Overall dimensional check shall be carried out on the Belt Scales.

1.07.02 Belt scale shall be calibrated with test weight/test chain in static at works and with test weight for dynamic condition at site.

1.07.03 All electronic modules shall be subjected to burn in test at 50 Degree C for 48 hours.

1.07.04 General check for load cell shall be carried out.

1.07.05 Test report for degree of protection on enclosure shall be furnished.

1.07.06 Accuracy/performance check shall be demonstrated at site.

1.0□.00 **D□□□ C□□□r□□ □ M□□□□□□□□□□□ S□□□□□ □(D□□□ S□□□r□□□□□□ □ Dr□ F□□ D□□□ S□□□r□□□□□□ S□□□□□)**

The details of the checks to be carried out on the various equipments are to be submitted by the Contractor for Owners approval. However some indicative checks

on different items are given below which should necessarily form a part of the Quality Assurance Plan to be agreed with by the Owner.

1.0□.01 **P□□ □□**

(a) All materials should be of tested quality and test certificates to be provided.

(b) DPT of machined shaft and impeller shall be done.

(c) Shaft forgings to be also subjected to ultrasonic testing.

(d) Impellers to be dynamically balanced to ISO 1940 Gr.6.3

(e) All pressure parts shall be hydraulically tested at 150% of the shut-off head or 200% of rated head, whichever is higher for 30 minutes. No leakage is allowed.

(f) All pumps to be performance tested as per Hydraulic Institute Standard/Indian Standard. Performance test to include check for noise, vibration level and temperature rise.

1.0□.02 **□□□□□□ □ S□□□□□□□□□□**

(a) Valves and Specialities shall be tested as per relevant standards / codes.

(b) Seat Leakage and hydraulic test to be carried out as per relevant standards / codes.

1.0□.0□ **P□□□□ □□d F□□□□□□□**

Pipes and fittings shall be tested as per relevant standards/ codes

1.0□.04 **A□r C□□ □r□□□□r**

a) All pressure parts shall be hydraulically tested at not less than 150% of design pressure for a duration of 30 minutes prior to painting.

b) All other parts including inter-connecting piping shall be hydraulically tested wherever possible, as per relevant codes.

c) Ultrasonic testing shall be carried out on all forgings and rotor for dia 50mm and above. MPI/DPT shall be done on machined area of the components.

d) During assembly all clearances and alignments shall also be checked and recorded

e) Rotor shall be statically and dynamically balanced

f) Performance Test(Shop Test)

i. Performance test on the compressor shall becarried out in accordance with ISO:1217/Eq. The test shall also include

demonstration of loading and unloading mechanism(Capacity control) and operation of safety valve

ii. Vibration and Noise level measurement shall be done during shop performance test.

1.0□.0□ **A□r R□□□□□□r**

a) Each finished vessel shall be hydraulically tested at 150% of the design pressure for a duration of 30 minutes

b) NDT on weld joints shall be as per respective code requirements or the minimum as specified below

i. 100% DPT on root run of butt welds

ii. 100% DPT on all finished butt welds and fillet welds

iii. 10% RT on butt welds which shall include all T-Joints

1.0□.00 □□□□□□□□□ **S**□□□□□

1.0□.01 Fan

(a) All materials should be of tested quality and test certificates should be provided.

(b) Dynamic balancing of the fan impellers to be carried out.

(c) Shop run test shall be conducted on all centrifugal fans including check for noise and vibration level.

(d) Performance test shall be conducted on one fan of each type at shop for capacity, pressure, efficiency and power consumption.

1.0□.02 □□□□□ □□**d S**□□□□□□□□□

Refer 1.08.02 above

1.0□.02.1 **P**□□□ □□**d F**□□□□□

Refer 1.08.03 above

1.0□.0□ **P**□□□□□ **A□r-C**□□**d**□□□□□**r**

Each Unit shall be subjected to production routine Test excluding performance test carried out as per relevant standard. Performance test of PAC shall be carried out as per relevant standard on one unit of each type and rating at site.

1.10.00 **Cr**□□□□**r**□

The details of the checks to be carried out for various components are to be submitted by the Contractor for Owner's approval. However, some indicative checks

on different items are given below which should necessarily form part of the Quality Assurance Plan to be agreed with the Owner.

(a) All plates equal to or above 25mm thickness shall be ultrasonically tested.

(b) Shaft forgings and suspension bars to be checked for ultrasonic testing in addition to check for chemical, mechanical, hardness, microstructure etc. as per applicable material specification.

(c) Following minimum NDT requirements to be ensured for welds:

i) Butt welds - 10% UT/RT and 100% MPI/DPT.

ii) Fillet Welds - 10% MPI/DPT.

(d) Crusher rotor to be dynamically balanced. Procedure to be submitted for approval.

(e) No-load trial run test to be carried out at shop to check for speed(RPM),temperature rise, noise level and vibration .

1.11.00 M□□□□ Tr□□□r□

(a) Shaft and wheel forgings – Ultrasonic test in addition to check for chemical, mechanical, hardness, microstructure etc. as per applicable material specification shall be conducted.

(b) Following minimum NDT requirements to be ensured for welds:

i) Butt welds - 10% UT/RT and 100% MPI/DPT.

ii) Fillet Welds - 10% MPI/DPT.

(c) Shop trial run test shall be carried out and shall include check for noise level and vibration.

1.12.00 I□-L□□ M□□□□□□ S□□r□□r□

i) Overall Dimensional, Visual check alongwith control panel.

ii) HV & IR.

iii) Operation, temperature rise, lifting capacity, force index and gauss strength.

1.1□.00 M□□□D□□□□□r□

i) Functional test including sensitivity, Burn in test, operation of liquid spray marker, detection of smallest piece of different materials as specified.

ii) Test report for Degree of protection test to be furnished.

1.14.00	**S□□ □□□□ U□□□**
	(a) Free carriage and cutter movement, speed of cutter and dust door closing and sealing shall be tested for samplers.
	(b) "No load test" shall be carried out for crushers.
1.1□.00	**B□□□□□E□□□□□r**
1.15.01	All plates equal to or above 25 mm thickness shall be ultrasonically tested.
1.15.02	Castings and forgings, forged/rolled bar/section shall be subjected to ultrasonically test in addition to check for chemical, mechanical, hardness, microstructure etc. as per applicable material specification.
1.15.03	Machined and hardfaced surface of casting/forging and other hardened, stellited parts shall be subjected to DPT/MPI in addition to check for case depth, hardness as applicable for chain/sprocket/gear reducer/rollers/wheel/pan etc.
1.15.04	Following minimum NDT requirements shall be followed for welds: i) Butt Welds in Tension- 100% UT/RT and 100% MPI/DPT. ii) Butt Welds in Compression- 10% UT/RT and 10% MPI/DPT. iii) Fillet Welds - 10% MPI/DPT.
1.15.05	For other items like drive system, motor, pulley, belt etc relevant portion of specification shall be applicable.
1.1□.00	**E□□□□□r□ (R□□□ □□d P□□□□ T□□□)**
	The details of the checks to be carried out in the various equipments are to be submitted by the contractor for owner's approval. However, some indicative checks on different items are given below which should necessarily form part of the quality assurance plan to be agreed with the owner.
1.16.01	All forgings shall be subjected to ultrasonic test to ensure free from internal defects in addition to check for chemical and mechanical properties.
1.16.02	10% of the welds selected at random shall be subject to DP test.
1.16.03	All forged components shall be subjected to DPI/MPI after machining.
1.16.04	Gear Reducer shall be checked for gear ratio, backlash, contact pattern. No load shop trial run shall be conducted on gear boxes to check for oil leakage, temperature rise, noise and vibration.
1.16.05	Buffer springs shall be subjected to load test as per relevant specifications. Material certificates for springs shall also be furnished.

1.16.06	All components prior to assembly shall be checked for dimensions.
1.16.07	Function test of Elevator assembly shall be carried out.
1.16.08	All electrical equipments shall be of proven quality.
1.16.09	Galvanized components/parts shall be checked for weight of Zn coating, thickness of coating, uniformity of coating and adhesion test and visual examination as per IS 2633 and IS 2629.
1.1□.00	**S□□□□S□r□□□□r□**
1.17.01	Only material which has been identified against mill sheet or test certificates shall be used for construction. Check testing shall be carried out in the absence of MTC. Correlation shall be maintained by Manufacturer. All plates above 40mm thickness shall be 100% ultrasonically tested.
1.17.02	Visual inspection of all welds shall be performed in accordance with AWS D.1.1.
1.17.03	NDT requirements of structural steel welds shall be as under: a) 100% RT/UT on butt-welds of plate thickness >= 32 mm. Edge for field weld shall be examined by MPI for plate thickness >= 32mm. b) For Plates of 10 mm < thickness < 32 mm - 10% RT On butt welds. c) 10% Ultrasonic testing shall be carried out on full penetration welds (other than butt welds) d) DP Test on Welds: • 100% on Root Run & 10% on Final Welds of all butt welds • At random 5% on fillet of built-up plate girders.
1.17.04	Girders/columns/Beams etc shall be trial assembled and match marked prior to dispatch. Trial assembly procedure at shop shall be submitted for NTPC review and approval.

SUB-SECTION-V-QM3

AIR CONDITIONING □ □ENTILATION SYSTEM

AIR CONDITIONING AND VENTILATION SYSTEM FOR FGDS

CLAUSE NO	QA MODULE FOR AIR CONDITIONING AND VENTILATION SYSTEM
1.00.00	Air cooled Condensing Unit (Outdoor unit), Evaporating unit (Indoor unit)
1.01.00	Compressor of Condensing Unit shall be tested as per relevant standard
1.01.01	Condenser (Heat Exchanger) , Evaporator coils assembly shall be subjected to Hydraulic/Pneumatic pressure/leakage test as applicable and Electronic refrigerant leakage test along with all relevant test on tube as per applicable code..
1.01.02	Assembled Condensing unit (Outdoor Unit) shall be subjected to Leakage test,Vacuum test, Run test/Functional test as applicable
2.00.00	**FANS**
2.01.00	20% DPT of welding on fan hub, blades, casing and impeller as applicable shall be carried out.
2.02.00	DPT of fan shafts shall be carried out after machining.
2.03.00	UT of fan shafts (diameter equal to or above 50mm) shall be carried out.
2.04.00	Rotating components of all fans shall be dynamically balanced to ISO-1940 Gr. 6.3
2.05.00	All Fans shall be subjected to run test for 4 hrs. or till temperature stabilization is reached. Vibration, Noise level, Temp. rise and current drawn shall be measured during the run test.
2.06.00	One fan of each type and size will be performance tested as per corresponding BIS /AMCA for Air flow, Static Pressure, Speed, Efficiency, Power Consumption, Noise, Vibration and Temp. Rise.
3.00.00	**AIR HANDLING UNIT**
3.01.00	For Fans refer tests as mentioned at 2.00.00
3.02.00	One per type of assembled AHU (AHU casing and fan assembly) shall be subjected to free run test. Noise, Vibration and Temp. Rise of bearing shall be measured during run test.
3.03.00	All cooling coil shall be pneumatically tested and no leakage shall be permitted.
4.00.00	**CENTRIFUGAL PUMP**
4.01.00	UT on pump shaft (dia equal to or above 40 mm) and MPI/DPT on pump shaft and impeller after machining shall be carried out.
4.02.00	All rotating components of the pumps shall be dynamically balanced to ISO-1940 Gr. 6.3
4.03.00	A standard hydrostatic test shall be conducted on the pump casing with water at 1.5 times the shut off pressure on the head characteristics curve or twice the rated pressure whichever is higher, for a minimum duration of 30 minutes.
4.04.00	Standard Running Test

4.05.01	All pumps shall be tested in the manufacturer's works preferably with contract motor for capacity, efficiency, head and brake horse power. Pump shall be given running test over the entire operating range covering from the shut-off head to the maximum flow. The duration of test shall be minimum one (1) hr. A minimum of seven readings approximately equidistant shall be taken for plotting the curves with one point at design flow. Testing of pumps shall be in accordance with stipulations of Hydraulic Institute Standard (HIS) and/or as per applicable Indian Standard or equivalent. Acceptance norms shall be as per approved datasheet & HIS standard only.
4.05.02	Noise and vibration shall be measured at shop for reference purpose only.
4.05.03	Pumps shall be subjected to strip down examination visually to check for mechanical damages after testing at shop in case abnormal noise level and/or excessive vibration are observed during the shop test.
4.05.04	NPSH test shall be conducted with water as the medium, if required as per approved data sheets.
5.00.00	**LOW PRESSURE AIR DISTRIBUTION SYSTEM**
5.01.00	Functional test for fire damper along with solenoid shall be done.
5.02.00	Prototype tests report of fire damper (duly approved/accepted by ENGG) for each type and size as per UL-555 for fire rating shall be furnished.
5.03.00	Site Test- After completion, all ducting system shall be checked/tested for air leakages/tightness (smoke test) at site.
6.00.00	**INSULATION**
6.01.00	Insulation material shall be tested for all mandatory tests only as per relevant code/standard.
6.02.00	Thermal conductivity tests (for thermal insulation only) shall be done as per relevant code for the same density and thickness of material and validity of test shall be as per relevant standard.
7.00.00	**AIR FILTERS**
7.01.00	Pre/Fine filters shall be tested for initial and final pressure drop Vs flow and average synthetic dust weight arrestance as per the requirement of BS 6540/ASHARE-52-76/EN779. HEPA (Absolute) filters shall be tested as per applicable code.
8.00.00	**PIPES & FITTINGS**
8.01.00	All pipes and fittings shall be tested as per applicable codes / standard.
8.02.00	Site test- Pipes shall be tested at site hydraulically/pneumatically as per application requirement
9.00.00	**VALVES & SPECIALTIES**
9.01.00	Visual and dimensional check of valves as per relevant codes and approved drawing.
9.02.00	All the water line valves shall be hydraulically tested for body, seat and back seat (wherever provided) as per the relevant standard to which these valves are supplied irrespective of the working pressure for which these valves are selected. Check valves shall also be tested for leak tightness test at 25% of the specified seat test pressure.

9.03.00	Valves shall be offered for hydro test and pneumatic test in unpainted condition.
9.04.00	Functional check of the valves for smooth opening and closing shall be done.
10.00.00	**SPLIT/CASSETTE / WINDOW AC/ PAC**
10.01.00	Split/Cassette/ Window AC will be accepted on the basis of Manufacturer Standard Guarantee and Warrantee certificate.
10.02.00	PAC Each Unit shall be subjected to production routine Test excluding performance test carried out as per relevant standard.
10.03.00	Performance test of PAC shall be carried out as per relevant standard on one unit of each type and rating at site.
11.00.00	**Unitary Air Filter (UAF)**
11.01.00	Random 10% DPT on weld joints shall be carried out
11.02.00	Hydraulic test of pressure parts at 1.5 times the design. Pressure and water fill test of tanks shall be carried out
11.03.00	Trial assembly of Air washer/UAF for one of each size shall be done in shop.

SUB-SECTION-V-QM4

EQUIPMENT COOLING WATER SYSTEM

EQUIPMENT COOLING WATER SYSTEM

	TEST / CHECKS / ITEM / COMPONENTS	Material Test	WPS/PQR/Welder Qualification	DPT/MPI	Assembly Fit Up	Visual & Dimensional Check	UT	RT	Hydraulic / Water Fill	Balancing	Type Test	Performance Test	Other Test
A	**PLATE TYPE HEAT EXCHANGER**		Y	Y[3]	Y	Y			Y				
A.1	Heat Transfer Plates	Y[1]		Y[2]		Y							Y[7]
A.2	Gaskets	Y				Y							
A.3	Cover Plates (Front & Rear)	Y[1]				Y	Y[5]						
A.4	Tie Rods	Y[1]		Y[4]			Y[6]						
B	**HORIZONTAL CENTRIFUGAL PUMP**				Y	Y						Y[10]	
B.1	Casing	Y[1]		Y[4]		Y			Y8				
B.2	Impeller	Y[1]		Y[4]		Y				Y[9]			
B.3	Shaft	Y[1]		Y		Y	Y[6]			Y[9]			

NOTES

1 One per heat / HT batch

2 DP Test shall be conducted for 10% of the lot of HT plates. However, in case of any defect, entire lot shall be tested and only defect free plates shall be accepted.

3 100% DP Test shall be conducted on butt welds and 10% DPT on fillet weld after final run.

4 100% DPT shall be carried out on machined surfaces.

5 UT shall be done on plates with thickness 25 mm or above.

6 UT shall be done on shaft / tie rod with diameter 50 mm or above.

7 After pressing each HT plate shall be subjected to either of the following tests, as per Manufacturer Practice
a) Light Box Test b) Vacuum Test c) Air Chamber Test

8 All pressure retaining parts shall be hydrostatically tested at 200% of pump rated head or 150% of shut – off head, whichever is higher, for at least 30 minutes. No leakage is allowed.

9 Static and Dynamic Balancing shall be carried out on complete rotor assembly.

10 All pumps shall be tested at rated speed, for head, flow capacity, efficiency and power consumption for the entire operating range i.e. from shut off head to maximum flow. A minimum of 7 readings shall be taken to plot the curve, with one reading at design flow. Testing standard shall be HIS (Hydraulic Institute Standard) of USA.
Performance test shall be carried out with contract motor, wherever Liquidated Damages are to be ascertained based on performance test as specified in Technical Specification..

11 Pipes, Valves and RE Joints shall be tested as per relevant standard/ Technical specification requirements.

ELECTRICAL SYSTEM

SUB-SECTION-V-QE1

MOTORS

MOTOR

TESTS CHECKS / TEMS/COMPONENTS	Visual	Dimensional	Make/Type/Rating /General Physical Inspection	Mech/Chem. Properties	NDT /DP/MPI/UT	Metallography	Electrical Characteristics	Welding/Brazing(WPS/PQR)	Heat Treatment	Magnetic Characteristics	Hydraulic/Leak/Pressure Test	Thermal Characteristics	Run out	Dynamic Balancing	Routine & Acceptance tests as per IS-325/IS-4722 /IS- 9283/IS 2148/IEC60034\IEC 60079-I/ IS-12615	Vibration	Over speed	Tan delta, shaft voltage & polarization index test	Paint shade, thickness & adhesion
Plates for stator frame, end shield, spider etc.	Y	Y	Y	Y	Y				Y										
Shaft	Y	Y	Y	Y	Y	Y			Y										
Magnetic Material	Y	Y	Y	Y			Y			Y		Y							
Rotor Copper/Aluminium	Y	Y	Y	Y			Y		Y										
Stator copper	Y	Y	Y	Y			Y		Y			Y							
SC Ring	Y	Y	Y	Y	Y		Y	Y	Y										
Insulating Material	Y		Y	Y			Y					Y							
Tubes, for Cooler	Y	Y	Y	Y	Y				Y		Y								
Sleeve Bearing	Y	Y	Y	Y	Y				Y		Y								
Stator/Rotor, Exciter Coils	Y	Y	Y				Y	Y											
Castings, stator frame, terminal box and bearing housing etc.	Y	Y	Y	Y	Y			Y											
Fabrication & machining of stator, rotor, terminal box	Y	Y			Y			Y	Y										

Wound stator	Y	Y					Y	Y											
Wound Exciter	Y	Y					Y	Y											
Rotor complete	Y	Y					Y						Y	Y					
Exciter, Stator, Rotor, Terminal Box assembly	Y	Y					Y												
Accessories, RTD, BTD,CT, Space heater, antifriction bearing, gaskets etc.	Y	Y	Y																
Complete Motor	Y	Y	Y												Y	Y	Y	Y1	Y

N□□□: 1. This is an indicative list of tests/checks. The manufacture is to furnish a detailed Quality Plan indicating the practices & Procedure followed along with relevant
supporting documents during QP finalization. However, No QP for LT motor upto 50KW.
2. Additional routine tests for Flame proof motors shall be applicable as per relevant standard
3. Makes of major bought out items for HT motors will be subject to NTPC approval.
4. Y1 = for HT Motor / Machines only.

SUB-SECTION-V-QE2

LT SWITCHGEARS □ BUSDUCTS

LT SWITCHGEAR

(MCC□PCC□ACDB□DCDB□FUSE BOARDS□LOCAL PUSH BUTTON STATION□LOCAL MOTOR STARTERS)

ATTRIBUTES / CHARACTERIS-TICS ⟶ ↓ ITEMS□ COMPONENTS□ SUB SYSTEM ASSEMBLIY	Make, Model, Type, Rating & TC	Dimensions & Finish	Electrical properties	Mechanical Properties	Chemical properties	Functional & Operational Features as per NTPC Spec.	Item to conform to relevant	Pretreatment as per IS 6005	Paint Shade, Adhesion, Thickness	Functional Checks	Milli-volt drop Test	IR – HV – IR Test	Degree of Protection Routine test as per NTPC spec	All Routine tests as per NTPC
Sheet Steel (IS : 513)	Y	Y		Y	Y		Y							
Aluminum Bus bar Material (IS : 5082)	Y	Y	Y	Y	Y		Y							
Copper Bus bar Material (IS : 613)	Y	Y	Y	Y	Y		Y							
Support Insulator	Y	Y	Y	Y			Y							
Air Circuit Breaker (IS: 13947)	Y	Y				Y	Y			Y	Y			Y
Energy Meters (IS : 13010, 13779)	Y	Y				Y	Y			Y				Y
Power & Aux. Contactors (IS : 13947)	Y	Y				Y	Y			Y				
Protection & Aux. Relays (IS : 3231) (IEC 60255 / IEC 61850)	Y	Y				Y	Y			Y				Y
Control & Selector Switches (IS : 13947)	Y	Y				Y	Y			Y				
CT's & PT's (IS 2705 / 3156)	Y	Y					Y							Y
MCCB (IS : 13947)	Y	Y					Y			Y				
Indicating Meters (IS : 1248)	Y	Y				Y	Y			Y				Y
Indicating Lamps (IS : 13947)	Y	Y				Y	Y			Y				
Air Break Switches (IS : 13947)	Y	Y				Y	Y			Y				
Control Terminal Blocks	Y	Y				Y	Y							

LT SWITCHGEAR

(MCC□PCC□ACDB□DCDB□FUSE BOARDS□LOCAL PUSH BUTTON STATION□LOCAL MOTOR STARTERS)

ATTRIBUTES / CHARACTERIS-TICS → ↓ **ITEMS□ COMPONENTS□ SUB SYSTEM ASSEMBLIY**	Make, Model, Type, Rating & TC	Dimensions & Finish	Electrical properties	Mechanical Properties	Chemical properties	Functional & Operational Features as per NTPC Spec.	Item to conform to relevant Standards	Pretreatment as per IS 6005	Paint Shade, Adhesion, Thickness &	Functional Checks	Milli-volt drop Test	IR – HV – IR Test	Degree of Protection Routine test as per NTPC spec	All Routine tests as per NTPC spec. & IS
Fuse (IS 13703)	Y	Y				Y	Y							
Control Transformer (IS : 12021)	Y	Y				Y	Y			Y				Y
Push Buttons (IS : 4794)	Y	Y				Y	Y			Y				
Transducer (IEC : 60688)	Y	Y				Y	Y			Y				Y
MCB (IS : 8828)	Y	Y				Y	Y			Y				
Breaker Handling Trolley	Y	Y				Y			Y	Y				Y
Synthetic Rubber Gasket (IS : 11149)	Y	Y		Y	Y		Y							
LT SWITCHGEAR (IS : 8623)	Y	Y				Y	Y	Y	Y	Y		Y	Y	Y

Notes:

1. This is an indicative list of tests / checks. The manufacturer is to furnish a detailed Quality Plan indicating the practice and procedure along with relevant supporting documents.
2. Makes of all major Bought Out Items will be subject to NTPC approval.

LT BUSDUCT

ATTRIBUTES , CHARACTERISTICS → / ITEM, COMPONENTS, SUB SYSTEM ASSEMBLY ↓	Dimension & Surface Finish	Make, Type, Rating & TC	Electrical Properties	Mechanical Properties	Chemical Properties	Item to conform to relevant IS	WPS Approval, Welder Qualification	Weld Quality Check (DP test & x-ray	Paint Shade, Thickness, Adhesion &	Tightness by Torque measurement	Electrical Clearances	Galvanizing Test as per IS 2629/ 2633/	IR – HV – IR Test	Phase Sequence Check	Degree of Protection routine test as per NTPC spec.
Aluminum Sheets / Plates / Strips / Flexibles / tubes (IS : 5082 / 737)	Y	Y		Y	Y	Y	Y	Y							
CRCA Flats / ISMC (IS 2062)	Y	Y		Y	Y	Y									
Neoprene / Synthetic Rubber Gaskets (IS 11149 / 3400)	Y	Y		Y	Y										
Rubber Bellows (IS : 3400)	Y	Y		Y	Y										
Support Insulator (BS : 2782, IEC : 660, IS : 10912)	Y	Y	Y	Y											
Galvanized Structure & GI Earthing Flat (IS : 2629 / 2633 / 4749)	Y	Y				Y						Y			
Space Heater & Thermostat		Y	Y										Y		
LT Busduct (IS : 8623 PART 2)	Y	Y				Y	Y	Y	Y	Y	Y		Y	Y	Y

Notes:

1. This is an indicative list of tests / checks. The manufacturer is to furnish a detailed Quality Plan indicating the practice and procedure along with relevant supporting documents.
2. Makes of all major Bought Out Items will be subject to NTPC approval.

SUB-SECTION-V-QE3

LT POWER CABLES

LT P□□ □r C□□□□□

A□□r□□□□□□ □ / C□□r□□□□r□□□□□ / I□□□ □C□□ □□□□□□□□ □ / S□□ S□□□□□ A□□□□ □□□	Make, Type & T.C as per relevant standard	Dimension/surface finish	Mechanical properties	Chemical Composition	Spark Test(as applicable)	Electrical properties	Hot Set Test/ Eccentricity & Ovality	Lay length & Sequence	Armour coverage, cross over, looseness, gap between two	Sequential marking/ Batch marking/ surface finish/ cable length	T.S & elongation before & after ageing on outer sheath & insulation	Thermal stability	Anti termite coating on wooden	Constructional requirements feature as per NTPC specification	Routine & Acceptance Tests as per relevant standard & NTPC specification	FRLS Tests
Aluminum (IS-8130)	Y	Y	Y	Y		Y										
XLPE Compound (IS-7098)	Y		Y			Y	Y				Y					
PVC insulation Compound (IS: 5831)	Y		Y			Y					Y	Y				
FRLS PVC Compound (IS-5831, ASTM-D2843, IS10810(Part 58), IEC-60754 Part-1)	Y		Y								Y	Y				Y
Extrusion & curing /Manufacturing of Core (PVC / XLPE)		Y			Y		Y					Y				
Core Laying								Y								
Armour wire/strip	Y	Y	Y													
Inner sheath	Y	Y														
Armouring		Y							Y							
Outer Sheathing		Y								Y						
P□□ □r C□□□□ (F□□□□□□d) (IS-5831, ASTM-D2843, IS10810(Part 58), IEC-60754 Part-1, IEC 60332 part III cat B)								Y	Y	Y	Y	Y		Y	Y	Y
Wooden drum(IS-10418) /Steel Drum		Y											Y	Y		

Notes:

1. This is an indicative list of tests / checks. The manufacturer is to furnish a detailed Quality Plan indicating the practice and procedure along with relevant supporting documents.
2. Make of all major Bought out items will be subject to NTPC approval.

ROUTINE TESTS	**F□□□□ □□□ r□□□□□ □□□□ □□□□□ □□rr□d □□□ □□ □□□□ dr□□ □□□□□□□□d □□□□□ □□r □□□□□□□ (P□C □□LPE □□□□□□□d) □ □□□□□.**	
1)	Conductor Resistance test	
2)	High voltage test	
ACCEPTANCE TESTS	**F□□□□ □□□ A□□□□□□□□ □□□□ □□□□□ □□rr□d □□□ □□ □□□□ □□□□ □□ □□□□ □□□□ (P□C □□LPE □□□□□□□d) □□□□□□□□□□ □□□ □□□r□d □□.**	
A) F□r C□□d□□□r (□□ □□r □□□ □□□□ □□□□ □ □□□□□□d □ IS: 1□□4 □□0□)		
	1)	Annealing test (Copper)
	2)	Tensile Test (Aluminum)
	3)	Wrapping Test (Aluminum)
	4)	Resistance test
B) F□r Ar□ □□r W□r□□ F□r□ □d W□r□□ (I□□□□□□□□□□) (□□ □□r □□□ □□□□ □□□□ □ □□□□□□d □ IS: 1□□4 □□0□)		
	1.	Measurement of Dimensions
	2.	Tensile Tests
	3.	Elongation Test
	4.	Torsion Test For Round wires only
	5.	Wrapping Test
	6.	Resistance Test
	7.	Mass of Zinc coating test For G S wires / Formed wires only
	8.	Uniformity of Zinc coating For G S wires / Formed wires only
	9.	Adhesion test For G S wires / Formed wires only
	10.	Freedom from surface defects
C) F□r P□C □□LPE □□□□□□□□ □ P□C S□□□□□ (□□ □□r □□□ □□□□ □□□□ □ □□□□□□d □ IS: 1□□4 □□0□)		
	1)	Test for thickness
	2)	Tensile strength & Elongation before ageing (for tests after ageing see “D”)
	3)	Hot set test (For XLPE insulation)

D) A□□□□□ □□□□:				
	Cr□□r□	**C□□d□□□□**	**T□□□R□□□□r□□ □□□□**	**R□□ □r□□**
P□C □□□□□□□□□□ □ □□□□r □□□□□□:	Samples as per relevant IS, from each size of cables in the offered lot, shall be tested for tensile strength & elongation (before ageing). **T□□□□□□ □ □□□□□□□□□□ □□□□□ □r□□□r□□□ □□ d□□□ □ □□□ □ □□□ □□□□r□□□d □ □□□□□□.** The values will be compared with corresponding values mentioned in the Type Test report accepted by NTPC. These values of Tensile Strength & Elongation (before ageing) should be within +/ - 15% of the corresponding values of Type Test report. (Please note that test values should be more than the minimum values indicated in relevant standard).	All sizes which meet the criteria	The size which has maximum negative deviation from type test report values will be put on accelerated ageing test. The samples shall be aged in air oven at temperature of 130ºc+/- 2ºc for 5 hours and tested for TS & elongation. Acceptance norms shall be as per IS.	In case the size does not meet the requirement in accelerated ageing test □□□□ □□□ □□□□□□ **(□ □□□□□ □□d □ □□ □□□□ □r□□□r□□□)** □ □□□ □□ □□□ □□ □□□□□□□ □□□□□□ □□**r IS.**
		Sizes which do not meet the criteria	Every size will be put on ageing test as per IS.	----
□LPE □□□□□□□□□□	Samples as per relevant IS, from each size of cables in the offered lot,will be put on ageing test as per IS.			

E) F□□□□□ □□□ □□□□□ □ □□□ □□ □□rr□□d □□□ □□ □□□ □□□□□d □□□□□□ □□ □□r IS □□ □□□□ □□□□ □□ □□□□ □□□□ (P□C □ □LPE □□□□□□□□d)		
	1)	Insulation resistance test (Volume resistivity method)
	2)	High voltage test

F) F□□□□□ □□□ □□□□□ □□□□□□□ □□rr□d □□□□□ □□□□ □□□ □□□□ □□□□□□r□d □□□(□□□ □r□□□□ □□□□□□□□□□ □ □□□□□)		
	1)	Thermal stability test on PVC insulation and outer sheath
	2)	Oxygen index test on outer sheath

	3)	Smoke density rating test on outer sheath
	4)	Acid gas generation test on outer sheath
G) F□□□ □ □□□□□□ □□□□□□ □□r IEC □0□□2 - P□r□ - □ (C□□□□□r□- B) □□ □□□ □□□□d □□□□□ □□ □□r □□□□ □□□ □□□ □□□□ □□□:		
		This test will be carried out using composite sampling i.e. irrespective of size; cables of one particular type (i.e. armoured PVC insulated, unarmoured PVC insulated, armoured XLPE insulated, unarmoured XLPE insulated) will be bunched together, as per calculations in line with the IEC. All sizes of PVC & XLPE insulated, armoured & unarmoured cables shall be covered. For one particular type, cables with OD less than or equal to 30 mm shall be clubbed together in touching formation while cables with OD greater than 30 mm shall be clubbed together leaving a gap equal to OD of cable having least diameter. Cable OD shall be taken as nominal overall diameter as per NTPC approved datasheet.
H) F□□□□ □□□ □□□□□ □□□□□□ □□rr□d □□ □□□ □□□□□ □□□□□□ □□□ □□□□□ □□□ (P□C □□LPE □□□□□□d) □□□□□r□d □□:		
	1)	Constructional / dimensional check, surface finish, length measurement, sequence of cores, armour coverage, Gap between two consecutive armour wires / formed wires, Sequential marking, drum / Batch (outer sheath extrusion batch)number marking on sheath
	2)	Measurement of Eccentricity & Ovality

SUB-SECTION-V-QE4

LT CONTROL CABLES

C□□□r□□C□□□□□

A□r□□□□□□ □ C□□r□□□□r□□□□□□ / I□□□ □C□□ □□□□□□□□ □ S□□ S□□□□□ A□□□□ □□□	Make, Type & T.C as per relevant standard	Dimension/surface finish	Mechanical properties	Chemical Composition	Spark Test(as applicable)	Electrical properties	Lay length & Sequence	Armour coverage, cross over,	Sequential marking/ Batch marking/ surface finish/ cable length	T.S & elongation before & after ageing on outer sheath & insulation	Thermal stability	Anti termite coating on	Constructional requirements feature as per NTPC	Routine & Acceptance Tests as per relevant standard & NTPC specification	FRLS Tests
Copper (IS-8130)	Y	Y	Y	Y		Y									
PVC insulation Compound (IS: 5831)	Y		Y			Y				Y	Y				
FRLS PVC Compound (IS-5831, ASTM-D2843, IS10810(Part 58), IEC-60754 Part-1)	Y		Y							Y	Y				Y
Extrusion & curing /Manufacturing of Core		Y			Y						Y				
Core Laying							Y								
Armour wire/strip	Y	Y	Y												
Inner sheath	Y	Y													
Armouring		Y						Y							
Outer Sheathing		Y							Y						
F□□□□□d C□□□□ (IS-5831, ASTM-D2843, IS10810(Part 58), IEC-60754 Part-1, IEC 60332 part III cat B)							Y	Y	Y	Y	Y		Y	Y	Y
Wooden drum(IS-10418) /Steel Drum		Y										Y	Y		

Notes:

1. This is an indicative list of tests / checks. The manufacturer is to furnish a detailed Quality Plan indicating the practice and procedure along with relevant supporting documents.
2. Make of all major Bought out items will be subject to NTPC approval.

ROUTINE TESTS	**F□□□□ □□□ r□□□□□ □□□□ □□□□□□ □□rr□d □□□□ □□□□ dr□□ □□□□□□□□d □□□□□ □□r □□□□□□□□.**	
1)	Conductor Resistance test	
2)	High voltage test	
ACCEPTANCE TESTS	**F□□□□ □□□ A□□□□□□□□□ □□□□ □□□□□□ □□rr□d □□□□□ □□□□ □□□ □□□□□□□□□□ □□□ □□□r□d □□.**	
A) F□r C□□d□□□□r (□□ □□r □□□ □□□□ □□□ □ □□□□□d □ IS: 1□□4)		
	1)	Annealing test (Copper)
	2)	Resistance test
B) F□r Ar□ □□r W□r□□ □F□r□ □d W□r□□ (I□□□□□□□□□□) (□□ □□r □□□ □□□□ □□□ □ □□□□□d □ IS: 1□□4)		
	1.	Measurement of Dimensions
	2.	Tensile Tests
	3.	Elongation Test
	4.	Torsion Test For Round wires only
	5.	Wrapping Test
	6.	Resistance Test
	7.	Mass of Zinc coating test For G S wires / Formed wires only
	8.	Uniformity of Zinc coating For G S wires / Formed wires only
	9.	Adhesion test For G S wires / Formed wires only
	10.	Freedom from surface defects
C) F□r P□C □□□□□□□□□ □ P□C S□□□□□ (□□ □□r □□□ □□□□ □□□ □ □□□□□d □ IS: 1□□4)		
	1)	Test for thickness
	2)	Tensile strength & Elongation before ageing (for tests after ageing see “D”)

D) Ageing test:				
	Criteria	**Condition**	**Test Requirements**	**Remarks**
PVC insulation & outer sheath:	Samples as per relevant IS, from each size of cables in the offered lot, shall be tested for tensile strength & elongation (before ageing). **Tensile & elongation testing shall preferably be done with a computerized machine.** The values will be compared with corresponding values mentioned in the Type Test report accepted by NTPC. These values of Tensile Strength & Elongation (before ageing) should be within +/ - 15% of the corresponding values of Type Test report. (Please note that test values should be more than the minimum values indicated in relevant standard).	All sizes which meet the criteria	The size which has maximum negative deviation from type test report values will be put on accelerated ageing test. The samples shall be aged in air oven at temperature of 130ºc+/- 2ºc for 5 hours and tested for TS & elongation. Acceptance norms shall be as per IS.	In case the size does not meet the requirement in accelerated ageing test **then all sizes (which had met the criteria) will be put on ageing test as per IS.**
		Sizes which do not meet the criteria	Every size will be put on ageing test as per IS.	----

E) F□□□□ □□□ □□□□□ □ □□□□□ □□rr□d □□□□□ □□□ □□□□d □□□□□ □□ □□r IS □□ □□□□ □□□□:		
	1)	Insulation resistance test (Volume resistivity method)
	2)	High voltage test

F) F□□□□ □□□ □□□□□ □□□□□□□ □□rr□d □□□□□ □□□□ □□□ □□□□ □□□□□r□d □□□(□□□ □r□□□□ □□□□□□□□□□):		
	1)	Thermal stability test on PVC insulation and outer sheath
	2)	Oxygen index test on outer sheath
	3)	Smoke density rating test on outer sheath
	4)	Acid gas generation test on outer sheath

G) For conformity checking against IEC 60502 - Part - 1 (Category - B) on each offered cable size & voltage grade:		
		This test will be carried out using composite sampling i.e. irrespective of size; cables of one particular type (i.e. armoured, unarmoured) will be bunched together, as per calculations in line with the IEC. All sizes of armoured & unarmoured cables shall be covered.
H) For routine tests carried on all manufactured lengths (per core and per cable) offered:		
	1)	Constructional / dimensional check, surface finish, length measurement, sequence of cores, armour coverage, Gap between two consecutive armour wires / formed wires, Sequential marking, drum / outer sheath extrusion's batch number marking
	2)	Measurement of Eccentricity & Ovality

SUB-SECTION-V-QE5

CABLING □EARTHING □ LIGHTNING PROTECTION

MODULE NO. SQE-1□

CABLING□EARTHING□LIGHTNING PROTECTION

ATTRIBUTES □ CHARACTERISTICS / ITEMS/COMPONENTS / SUB SYSTEMS	Dimension	Paint shade, paint thickness, adhesion	Pre-treatment of sheet	IP protection	Proof load*	Surface finish	Deflection test*	HV & IR	Galvanise Test (If Applicable)	Functional	Bought out items/Bill of material	Routine tests as per relevant standard & specification	Acceptance tests as per relevant standard & specification	Constructional feature as per NTPC Specification
Wall Mounted-Lighting Panel (IS-513, IS:5, IS:2629, 2633, 6745)	Y	Y	Y	Y		Y		Y		Y	Y	Y	Y	Y
Switch box/junction box/ Receptacles Panel (IS-513, IS:5, IS:2629, 2633, 6745)	Y	Y	Y	Y		Y		Y	Y	Y	Y	Y	Y	Y
Cable glands(BS-6121)	Y													Y
Cable lug	Y													Y
Lighting wire (IS-694)	Y											Y		
Flexible conduits	Y											Y		Y
Conduits (Galvanise & Epoxy) IS-9537 & IS-2629, 2633, 6745	Y		Y						Y			Y		Y
RCC Hume Pipe (IS-458)												Y		
Cable termination & straight through joint (IS 13573)	Y											Y		Y
Cable Trays, bends, tees, crosses, Flexible supports system & accessories IS-513, 2629,2633,6745	Y		Y		Y	Y	Y		Y			Y	Y	Y
Trefoil clamp	Y													Y
GI flats for earthing & lighting protection (IS 2062, 2629, 6745,2633)	Y		Y						Y			Y		Y
GI wire (IS-280)	Y											Y		
Fire Sealing System (BS –476)												Y	Y	Y

.Note:1.This is an indicative list of tests /checks. The manufacturer is to furnish a detailed Quality Plan indicating the practice and procedure along with relevant supporting documents.

2.* Deflection Test on cable trays and Proof Load test on cable trays support system will be as per details given in the NTPC technical specification & approved MQP. The above acceptance tests shall be done only on one sample from each size of offered lot. This test is not applicable on bends, tees & crosses.

3. Make of all items will be subject to NTPC approval.

SUB-SECTION-V-QE6

ELECTRICAL ACTUATOR WITH INTEGRAL STARTERS

ELECTRICAL ACTUATOR WITH INTEGRAL STARTER

Test/Attributes Characteristics / ITEM/ COPONENT/ SUB SYSTEM ASSEMBLY/ TESTING	RPM ®	No Load Current ®	IR & HV Test®	Mounting Dimension®	All routine Test as per Standard & Specification®	Correct Phase Sequence®	Operation & Setting of limit Switch/Torque Switch®	Stall Torque/Current (A)	Hand Wheel operation/ Auto de clutch function (A)	Function of Aux. like Potentiometer, space heater, position indicator	EPT output ®	Grease leakage ®	Local/ Remote (Open-Stop-Close) Operation® Safety check (Single phasing, Phase correction, Tripping etc.) (A)
ELECTRICAL ACTUATOR WITH INTEGRAL STARTER(IS□□□□4)													
Motor	Y	Y	Y	Y	Y								
Final Testing	Y	Y	Y	Y	Y	Y	Y	Y	Y	Y	Y	Y	Y

Note: 1) Detailed procedure of Burn-in and Elevated Temperature test shall be as per Quality Assurance Programme in General Technical Conditions

2) This is an indicative list of tests/checks. The manufacturer is to furnish a detailed quality plan indicating the practices and procedure adopted along with relevant supporting documents.

® - Routine Test (A) - Acceptance Test Y - Test applicable

SUB-SECTION-V-QE7

STATION LIGHTING

STATION LIGHTING SQE□1□

Item Components / Sub System / Assembly — Attributes / Characteristics	Make, Type , Rating/ TC	Dimension	Pre-Treatment of sheat	Paint Shade Thickness Adhesion & Finish	Galvanization Tests	IP Test	Bought Out Items/ Bill of Material	HV & IR	Functional Check as per spec.	Constructional Feature as per NTPC spec.	Routine Test as per relevant std and spec	Acceptance Test as per relevant std and spec	Item to conform to relevant standard
Luminaries (IS-10322 Part-5 Sec.1 (non –LED type)	Y					Y		Y			Y	Y	Y
Electronic Ballast	Y										Y	Y	Y
Lighting Wire (IS-694)	Y										Y		
Fans (IS-374)	Y										Y		
Pole (IS-2713)	Y			Y						Y	Y	Y	
Lamps (IS-9800, IS-9974)	Y										Y	Y	
Lighting Mast (with raise & lower lantern type)	Y	Y			Y					Y	Y	Y	
Wall Mounted Lighting Panel (IS-513, IS-5)	Y	Y	Y	Y	Y	Y	Y	Y	Y	Y	Y	Y	
Switch Box/ Junction Box/Receptacles/ Local Push Button Station / Lighting Panel (IS-513, 2629, 2633, 4759, 6745)	Y	Y	Y	Y	Y	Y	Y	Y	Y	Y	Y	Y	
Cable Gland (BS-6121)	Y	Y									Y		
Cable Lug (IS-8309)	Y	Y									Y		
Flexible Conduit	Y										Y		
Lighting Transformer (IS-11171)	Y									Y	Y		
Epoxy & Galvanised Conduit (IS-9537, 2629, 2633, 4759, 6745)	Y	Y									Y		Y

LED L□□ □□□r□ □□□□□□ r□□□□r□□ □□□□:

1) LED modules to conform to IS: 16103 part 2. Manufacturer to issue a certificate of compliance for the same.

2) Control gear to conform to IS 15885 part 2 section 13. Manufacturer to issue a certificate of compliance for the same.

3) LED luminaire to conform to IS 16107 part 2 section 1. Manufacturer to issue a certificate of compliance for the same.

4) LED luminaire marking to be as per IS 16107 part 2 section 1. Manufacturer to issue a certificate of compliance for the same.

5) Acceptance tests as per IS 16107 part 2 section 1 to be carried out on LED luminaire except long duration tests i.e. a) Chromaticity coordinates & correlated color temperature (CCT); b) Color rendering index (CRI). Manufacturer will submit a COC for above tests i.e. CCT & CRI

6) LED driver make, model, type & rating may be as per recommendations of LED module manufacturer.

Notes:
1. This is an indicative list of tests / checks. The manufacturer is to furnish a detailed Quality Plan indicating the practice and procedure along with relevant supporting documents.
2. Make of all major Bought Out Items will be subject to NTPC approval.

SUB-SECTION-V-QE8

AU□ILIARY TRANSFORMERS

AU□ILIARY □LT TRANSFORMER

A□r□□□□□ □C□r□□□r□□□□ / I□□ □C□ □□□□□□ S□□ S□□□□ □	Visual & Dimensional Checks	Mechanical properties	Electrical strength	Thermal properties	Chemical Composition	Compatibility with oil	NDT / DPT / MPI / UT	Ageing Test.	Voltage Ratio, Vector Group & Polarity, Magnetic Balance Test	Make / Type / Rating / Model / TC / General Physical Inspection.	Functional check	WPS & PQR	Routine Test as per relevant standard / NTPC Specification
Tank, H.V. & L.V. Cable Box / Flange throat	Y	Y					Y					Y	
Conservator / Radiator / Cooler / Pipes	Y	Y					Y						
Copper Conductor (IS:191)	Y	Y	Y		Y								
Insulating Material	Y	Y	Y	Y	Y	Y							
CRGO Lamination & Built Core	Y	Y	Y		Y	Y				Y			
Bushing / Insulator (IS:2544 / 5621)	Y	Y								Y			Y
Gasket	Y	Y			Y	Y		Y		Y			Y
Transformer Oil (IEC296)			Y										Y
OLTC / Off-Circuit Tap Changer	Y									Y			Y
Core Coil Assembly & Pre-tanking	Y								Y	Y			
Marshalling Box	Y									Y	Y		Y
WTI, OTI, MOG, PRD, Breather, Terminal Connector, Bucholz Relay, Valves	Y									Y	Y		
Welding (ASME Sect-IX)	Y						Y					Y	
Complete Transformer (IS:2026/ IEC-60076)	Y												Y

Note: 1) This is an indicative list of tests / checks. The manufacturer is to furnish a detailed Quality Plan indicating the practice and procedure along with relevant supporting documents.

2) All major Bought Out Items will be subject to NTPC approval.

SUB-SECTION-V-QE9

DG SET

DIESEL GENRATOR SET **SQE□1□**

DIESEL ENGINE

TESTS□CHECKS / ITEMS/COMPONENTS	Material Test	DP/MPI	UT(On forging and piston Bonding)	Balancing	Hydraulic/water fill test	Assy./fit up	Dimension	Functional/Operation test	Performance test as per BS-5514/or equivalent IS/ISO- Standard including Governing Test for 3 hors at full load and one hr at 10% overload	Fuel consumption, rated power measurement,rated speed	All other tests(if applicable) as per Spec./ relevant standard
Crank shaft	Y	Y	Y	Y							
Cylinder blocks/heads	Y				Y						
Liner/ Radiator	Y				Y						
Rotating/moving parts other than crank shaft	Y	Y									
Piston	Y	Y	Y								
Diesel Engine						Y	Y	Y	Y	Y	Y

Note:
1. This is an indicative list of tests / checks. The manufacturer is to furnish a detailed Quality Plan indicating the practice and procedure along with relevant supporting documents in line in case required as per agreement with NTPC.
2. Make of all major BOIs will be subject to NTPC approval.

ALTERNATOR

TESTS CHECKS / ITEMS/COMPONENTS	Visual	Dimensional	Make/Type/Rating/TC/General Physical Inspection	Mech/Chem. Properties	NDT /DP/MPI/UT	Metallography	Electrical Characteristics	Welding/Brazing(WPS/PQR)	Heat Treatment	Magnetic Characteristics	Hydrualic/Leak/Pressure Test	Thermal Characteristics	Run out	Dynamic Balancing	All tests as per IS--4722	Vibration	Over speed	Tan delta, shaft voltage & polarisation index test
Plates for stator frame,end shield, spider etc.	Y	Y	Y	Y					Y									
Shaft	Y	Y	Y	Y	Y	Y			Y									
Magnetic Material	Y	Y	Y	Y	Y		Y			Y		Y						
Rotor Copper/Aluminium	Y	Y	Y	Y		Y	Y		Y									
Stator copper	Y	Y	Y	Y			Y		Y			Y						
SC Ring	Y	Y	Y	Y	Y	Y	Y	Y	Y									
Insulating Material	Y		Y	Y			Y					Y						
Tubes for Cooler	Y	Y	Y	Y	Y				Y		Y							
Sleeve Bearing	Y	Y	Y	Y	Y				Y		Y							
Stator/Rotor, Exciter Coils	Y	Y	Y				Y	Y										
Castings, stator frame,terminal box and bearing housing etc.	Y	Y	Y	Y	Y			Y										
Fabrication & machining of stator, rotor, terminal box	Y	Y			Y				Y									

ALTERNATOR

TESTS CHECKS / ITEMS/COMPONENTS	Visual	Dimensional	Make/Type/Rating/TC/General Physical Inspection	Mech/Chem. Properties	NDT /DP/MPI/UT	Metallography	Electrical Characteristics	Welding/Brazing(WPS/PQR)	Heat Treatment	Magnetic Characteristics	Hydrualic/Leak/Pressure Test	Thermal Characteristics	Run out	Dynamic Balancing	All Routine tests as per IS-/IS-4722	vibration	Over speed	Tan delta, shaft voltage & polarisation index test
Wound stator	Y	Y					Y	Y										
Wound Exciter	Y	Y					Y	Y										
Rotor complete	Y	Y					Y						Y	Y				
Exciter, Stator, Rotor, Terminal Box assembly	Y	Y					Y											
Accessories, RTD, BTD,CT,AVR. Brushes, Diodes,Space heater, antifriction bearing, cable glands, lugs, gaskets etc.	Y	Y	Y															
Alternator (IS 4722)	Y	Y	Y												Y	Y	Y	Y1

Note: 1. This is an indicative list of tests / checks. The manufacturer is to furnish a detailed Quality Plan indicating the practice and Procedure along with relevant supporting documents during QP finalisation.
2. Make of all major BOIs will be subject to NTPC approval.
Y1= for HT Machines only.

FINAL ASSEMBLY

TESTS□CHECKS / ITEMS/COMPONENTS	Material Test	Dimension	WPS/PQR/Welding	NDT/DP/MPI/UT	Check completeness	Hydraulic/Leak/Pressure test	Functional Tests	All routine test as per Spec/ IS	No load test for 5 min & partial load for one hour of the DG set assembly	Clearances & Alignment
Base frame	Y	Y	Y	Y	Y					
Fuel Tank	Y	Y	Y	Y	Y	Y				
Battery								Y		
Battery Charger								Y		
Control Panel								Y		
Assembled DG Set		Y			Y		Y		Y	Y

NOTES:
1. This is an indicative list of tests / checks. The manufacturer is to furnish a detailed Quality Plan indicating the practice and procedure along with relevant supporting documents during finalisation of QP.
2. Make of all major Bought Out Items will be subject to NTPC approval.

SUB-SECTION-V-QE10

ELE□ATOR

P□□□□□□□r□S□r□□□□ E□□□□□r□

TEST □CHECK / ITEM	Material Test	DPI/MPI	Ultrasonic Test	Dimensions/Physical	Functional/ Operational Test/ Run Test	Performance Test	Other Tests	All routine tests as per applicable standard	Plain shade, thickness & adhesion	Assembly/fit up
S□□□□ □G□□r□P□□□□□P□□□□□S□□□□□	Y	Y	Y	Y						
S□r□□□	Y	Y	Y	Y				Y		
P□□□□□	Y			Y						
W□r□r□□□				Y			Y5			
S□□□□□ d□□□□□								Y		
G□□r□d M□□□□□□					Y					
□□□F Dr□□□					Y			Y		
P□□ □r□ C□□□r□□ □ Tr□□□□□ C□□□□□								Y4		
C□□□r□□P□□□□				Y					Y	
ARD S□□□□□					Y			Y		
E□□□r□□□□□ □□□r								Y		
C□□□r□□□r □□□□□ □□□ □ □□□ □□□F dr□□□					**Y**		Y3			
C□□ □□□□□ E□□□□□□r				Y	Y1	Y1	Y2			Y

Y1 –Test to Be Done At Site

Y2 - Load/Overload Test to Be Done At Site as Applicable.

Y3 – Burn in test on electronic card

Y4 – Routine tests including FRLS tests as per Tech. Spec.

Y5- Test report as per relevant std.

NOTE: 1. This is an indicative list of tests/checks. The manufacturer is to furnish a detailed quality plan indicating the applicable practices and procedures followed along with relevant supporting documents during QAP finalization.

2. Makes of all bought out items shall be subject to NTPC approval

SUB-SECTION-V-QE11

HT CABLES

M□ (□.□ □□ □□.□. □□ □11 □□ □□□ □□) C□□□□□

A□r□□□□□□ □ / C□□r□□□□r□□□□□ / I□□□ □C□□ □□□□□□□ □ / S□□ S□□□□□ A□□□□ □□□	Make, Type & T.C as per relevant standard	Dimension/surface finish	Mechanical properties	Chemical Composition	Spark Test(as applicable)	Electrical properties	Hot Set Test/ Eccentricity & Ovality	Lay length & Sequence	Armour coverage, cross over, looseness, gap between two wires	Sequential marking/ Batch marking/ surface finish/ cable length	T.S & elongation before & after ageing on outer sheath & insulation	Thermal stability on outer sheath	Metallic (Cu) Screening (If applicable)	Anti termite coating on wooden drums	Constructional requirements feature as per NTPC specification	Routine & Acceptance Test as per relevant standard & NTPC specification	FRLS Test
Aluminum (IS-8130)	Y	Y	Y	Y		Y											
Semiconducting Compound	Y		Y			Y											
XLPE Compound (IS-7098 Part-II)	Y		Y			Y					Y						
FRLS PVC Compound (IS-5831, ASTM-D2843, IS10810(Part 58) ,IEC-60754 Part-1)	Y		Y								Y	Y					Y
Triple Extrusion & curing /Manufacturing of Core		Y			Y		Y										
Copper Tape	Y	Y	Y			Y											
Polyster tape	Y	Y															
Core Laying								Y									
Armour wire/strip	Y	Y	Y														
Copper tapping	Y	Y											Y				
Inner sheath	Y	Y															
Armouring		Y							Y								
Outer Sheathing		Y								Y							
P□□ □r C□□□□ (F□□□□□□d)								Y	Y	Y	Y	Y			Y	Y	Y
Wooden drum(IS-10418) /Steel Drum		Y												Y	Y		

Notes:

1. This is an indicative list of tests / checks. The manufacturer is to furnish a detailed Quality Plan indicating the practice and procedure along with relevant supporting documents.
2. Make of all major Bought out items will be subject to NTPC approval.

ROUTINE TESTS	**F□□□□ □□□ r□□□□□□ □□□□ □□□□□□ □rr□d □□□ □□ □□□ dr□□ □□□□□□□d □□□□□ □r □□□□□□ □ □□□□.**	
1)	Conductor Resistance test	
2)	High voltage test	
3)	Partial discharge test **(□r S□r□□□d □□□□□ □□□)**	
ACCEPTANCE TESTS	**F□□□□ □□ A□□□□□□□□ □□□□ □□□□□□ □rr□d □□□□ □□□ □□□ □□□□□ □□□ (□□□□□ r□□□□) □□ □□□□□□□□□ □□ □□r□d □□.**	
A) F□r C□d□□□r (□□ □r □□□ □□□ □ □□□□d □ IS: □0□□ P□r□ll)		
	1)	Annealing test (Copper)
	2)	Tensile Test (Aluminum)
	3)	Wrapping Test (Aluminum)
	4)	Resistance test
B) F□r □□□□r □□□ □W□r□ (□□ □r □□□ □□□ □ □□□□d □ IS: □0□□ P□r□ll)		
	1)	Measurement of Dimensions
	2)	Conductivity check
B) F□r Ar□ □r W□r□ □F□r □d W□r□ (l□□□□□□□□□) (□□ □r □□□ □□□ □ □□□□d □ IS: □0□□ P□r□ll)		
	1.	Measurement of Dimensions
	2.	Tensile Tests
	3.	Elongation Test
	4.	Torsion Test For Round wires only
	5.	Wrapping Test
	6.	Resistance Test
	7.	Mass of Zinc coating test For G S wires / Formed wires only
	8.	Uniformity of Zinc coating For G S wires / Formed wires only
	9.	Adhesion test For G S wires / Formed wires only
	10.	Freedom from surface defects

C) For XLPE insulation & PVC Sheath (as per relevant IS: 10810 Part-II)		
	1)	Test for thickness
	2)	Tensile strength & Elongation before ageing (for tests after ageing see "D")
	3)	Hot set test (For XLPE insulation)

D) Ageing test:				
	Criteria	**Condition**	**Test Requirements**	**Remarks**
PVC outer sheath :	Samples as per relevant IS, from each size of each type (voltage rating) of cables in the offered lot, shall be tested for tensile strength & elongation (before ageing). **Tensile & elongation testing shall preferably be done with a computerized machine.** The values will be compared with corresponding values mentioned in the Type Test report accepted by NTPC. These values of Tensile Strength & Elongation (before ageing) should be within +/ - 15% of the corresponding values of Type Test report. (Please note that test values should be more than the minimum values indicated in relevant standard).	All sizes which meet the criteria	For PVC: The size which has maximum negative deviation from type test report values will be put on accelerated ageing test. The samples shall be aged in air oven at temperature of 130ºc+/- 2ºc for 5 hours and tested for TS & elongation. Acceptance norms shall be as per IS.	In case the size does not meet the requirement in accelerated ageing test **then all sizes (which had met the criteria) will be put on ageing test as per IS.**
		Sizes which do not meet the criteria	Every size will be put on ageing test as per IS.	----
XLPE Insulation	Samples as per relevant IS, from each size of each type (voltage rating) of cables in the offered lot, will be put on ageing test as per IS.			

E) For routine tests as per relevant IS as mentioned below		
	1)	Insulation resistance test (Volume resistivity method)
	2)	High voltage test
	3)	Partial discharge test (for Screened cables only)

F) F□□□□ □□□ □□□□□ □□□□□□□ □□rr□d □□□□□ □□□ □□□ □□□□ □□□□□r□d □□□(□□□ □r□□□□□ □□□□□□□□□□ □ □□□□□)		
	1)	Thermal stability test on outer sheath
	2)	Oxygen index test on outer sheath
	3)	Smoke density rating test on outer sheath
	4)	Acid gas generation test on outer sheath
	5)	Flammability test as per IEC 60332 - Part- 3 (Category- B) on completed cable
G) F□□□□ □□□ □□□□□ □□□□□□□ □□rr□d □□ □□□ □□□□□ □□□□□ □□□ □□□□□ □□□ □□□□□r□d □□:		
	1)	Constructional / dimensional check, surface finish, length measurement, sequence of cores, armour coverage, Gap between two consecutive armour wires / formed wires, Sequential marking, marking of drum no. / Batch number of outer sheath extrusion
	2)	Measurement of Eccentricity & Ovality

SUB-SECTION-V-QE12

HT SWITCHGEARS

QA TABLE FOR HT SWITCHGEAR

ATTRIBUTES / CHARACTERISTICS → / ITEMS□ COMPONENTS□ SUB-SYSTEM ASSEMBLY	Make, Type, Model, Rating & TC	Electrical Properties	Mechanical properties	Chemical Properties	Dimensions & Finish	Constructional, Functional & Operational Features as per NTPC Spec.	Item to conform to relevant Standards	Pretreatment as per IS 6005	Paint shade, thickness, adhesion & finish	Functional Checks	HV & IR Test	Degree of Protection Routine test as per NTPC spec.	CB Operation timing check	All Routine Tests as per relevant standard
CRCA steel sheet/ Aluzinc*/ Zincalum*/ Galvalum*	Y		Y	Y	Y		Y							
Aluminum Bus bar material (IS : 5082)	Y	Y	Y	Y	Y		Y							
Copper Bus bar material (IS : 613)	Y	Y	Y	Y	Y		Y							
Bus bar Support Insulator	Y	Y	Y		Y		Y				Y			
HT Circuit Breaker (IEC-62271-100)	Y				Y	Y	Y			Y			Y	Y
HT Contactors (IS : 9046 / IEC 60470)	Y				Y	Y	Y			Y				Y
Protection & Auxilliary Relays	Y				Y	Y	Y			Y				Y
HT CT's & PT's (IS : 2705 / 3156)	Y				Y		Y							Y
HT Fuses (IS : 9385)	Y				Y	Y	Y							
Surge Arrester (IEC : 99 –4)	Y				Y		Y							Y
LT Contactors (IS : 13947)	Y				Y	Y	Y			Y				
Control & Selector Switches (IS : 6875)	Y				Y	Y	Y			Y				
Indicating Meters (IS : 1248)	Y				Y	Y	Y			Y				Y
Indicating Lamps (IS : 13947)	Y				Y	Y	Y			Y				
Push Buttons (IS : 4794)	Y				Y	Y	Y			Y				
Control Transformer (IS : 12021)	Y				Y	Y	Y			Y				Y
LT Fuses (IS : 13703)	Y				Y	Y	Y							
Energy Meters (IS : 722)	Y				Y	Y	Y			Y				Y
Transducers (IEC : 60688)	Y				Y	Y	Y			Y				Y
Diodes	Y	Y				Y	Y			Y				
Terminal Blocks	Y	Y				Y	Y							
Synthetic Rubber Gasket (IS : 11149 / 3400)	Y	Y			Y		Y							
Breaker Handling Trolley	Y				Y	Y			Y	Y				
HT Switchgear Panel IEC-62271-200)	Y				Y	Y	Y	Y	Y	Y	Y	Y	Y	Y

Notes:

1. This is an indicative list of tests / checks. The manufacturer is to furnish a detailed Quality Plan indicating the practice and procedure along with relevant supporting documents.
2. Make of all major Bought Out Items will be subject to NTPC approval.
3. Temperature rise test reports for diode plates with actual heat sink will be verified.

*. CRCA Galvanized steel with metal coating composed of Al (55%), Zn (43.4%) & Si (1.6%),

SUB-SECTION-V-QE13

MEDIUM □OLTAGE BUSDUCT

SQE-0□

M□d□□ □□□□□□ BUS DUCT

Activity / Inspection Stage	Visual & Dimensional Checks	Electrical / Mechanical / Chemical Properties	WPS & PQR	NDT (RT / DP / MPI / UT)	Painting Quality & Adhesion Test	Galvanising Test as per IS: 2629 / 2633 / 6745	Electrical clearance & Creepage distance	Functional/Operational check	Make / Type Rating / Model / TC / Embossing/Printing of make & batch /General Physical Inspection	Trial Assembly at works.	Routine Test as per relevant standard / NTPC Specification
Enclosure / Cubicle	Y	Y		Y	Y		Y				Y
Bus bar Conductor / Flexible Connector & Dis-connector Link	Y	Y		Y							
Galvanised Steel Structure & Plate (Steel as per IS:2062)	Y					Y					
Epoxy / Seal-off Bushing & Epoxy / Porcelain Post / Support Insulator	Y	Y					Y		Y		Y
Welding of enclosure & conductor	Y		Y	Y							
Gasket, Silica gel Breather, Elastomer Spring Head		Y						Y	Y		
Complete Bus Duct & Cubicles IS:8084	Y				Y		Y			Y	Y

Note:

1) This is an indicative list of tests / checks. The manufacturer is to furnish a detailed Quality Plan indicating the practice and procedure along with relevant supporting documents.
2) All major Bought Out Items will be subject to NTPC approval.

SUB-SECTION-V-QE14

□FD MODULE

□FD MODULE SQE□2□

ATTRIBUTES □ CHARACTERISTICS ITEMS□COMPONENTS□ SUB SYSTEM ASSEMBLY	Visual & Dimensional checks	Make / Type / Rating etc.	Final Inspection as ISS / IEC	Remarks
HT Breaker (IEC 56)	Y	Y	Y	
DC Reactor	Y	Y		For details refer table for DC Reactor
Transformer	Y	Y		For details refer table for Transformer
Motor	Y	Y		For details refer separate table for Motor
VFD Panel	Y	Y		For details refer table for VFD

Note : 1) This is an indicative list of tests/checks. The manufacture is to furnish a detailed Quality Plan indicating the practices & Procedure followed alongwith relevant supporting documents during QP finalisation.

2) Make of all major Bought Out Items will be subject to NTPC approval.

DC REACTOR

ATTRIBUTES □ CHARACTERISTICS / ITEMS□COMPONENTS□SUB SYSTEM ASSEMBLY	Visual	Dimensional	Mech. & Chem. Property	Electrical Characteristics	Pretreatment by Seven Tank	Painting by Stove Enameling	Final Inspection as per IS-2026	Welding/NDT
Winding Material (Aluminium)	Y	Y	Y	Y				
Insulation Material	Y	Y		Y				
Sheet Steel	Y	Y	Y					
Winding	Y	Y		Y				
Fabrication of Enclosures	Y	Y			Y	Y		Y
Assembly	Y	Y						
Routine Tests	Y	Y					Y	

Note : 1) This is an indicative list of tests/checks. The manufacturer to furnish a detailed Quality Plan indicating their practice & procedure along with relevant supporting documents during QP finalisation for all items.

2) All major Bought Out Items will be subject to NTPC approval.

TRANSFORMER (OIL FILLED)

Attributes / Characteristics / Items/Components Sub Systems	Visual & Dimensional Checks	Mechanical properties	Electrical strength	Thermal properties	Chemical Composition	Compatibility with oil	NDT / DPT / MPI / UT	Ageing Test.	Voltage Ratio, Vector Group & Polarity, Magnetic Balance Test	Make / Type / Rating / Model / TC / General Physical Inspection.	WPS & PQR	Routine Test as per relevant test	Routine Test
Tank, H.V. & L.V. Cable Box / Flange throat	Y	Y					Y						
Conservator / Radiator / Cooler / Pipes	Y	Y					Y						
Copper Conductor (IS:191)	Y	Y	Y		Y								
Insulating Material	Y	Y	Y	Y	Y	Y							
CRGO Lamination & Built Core	Y	Y	Y		Y	Y							
Bushing / Insulator (IS:2544 / 5621)	Y	Y								Y		Y	
Gasket	Y				Y	Y		Y				Y	
Transformer Oil (IS:335 / IEC296)												Y	
Off-Circuit Tap Changer	Y									Y			
Core Coil Assembly & Pre-tanking	Y								Y				
Marshalling Box	Y	Y					Y					Y	
WTI, OTI, MOG, PRD, Breather, Terminal Connector, Bucholz Relay, Globe & Gate Valve,	Y									Y			
Welding (ASME Sect-IX)	Y										Y		
Complete Transformer (IS:2026/ IEC-60076)	Y												Y

Note: 1) This is an indicative list of tests / checks. The manufacturer is to furnish a detailed Quality Plan indicating the practice and procedure along with relevant supporting documents.
2) All major Bought Out Items will be subject to NTPC approval.

DRY TYPE TRANSFORMER

Attributes / Characteristics / Items/Components Sub Systems	Visual & Dimensional check	Mechanical properties	Electrical strength	Thermal Properties	Chemical Properties	NDT / DP / MPI	Voltage Ratio, Vector Group & Polarity	Make / Type / Rating / Model /TC / General Physical Inspection	WPS & PQR	Routine Test as per relevant standard	Measurement of capacitance & tan delta between winding	Routine Test
Enclosure door, H.V. & L.V. Cable Box / Flange Throat	Y	Y						Y				
Copper Conductor	Y	Y	Y		Y							
Insulating Material	Y			Y	Y							
CRGO Lamination & Built Core	Y											
Bushing /Insulator (IS:2544 / 5621)	Y							Y		Y		
Gasket	Y							Y		Y		
Off-Circuit Tap Changer	Y							Y				
Core Coil Assembly	Y						Y					
Marshalling Box	Y									Y		
WTI, Thermister, Terminal Connector	Y							Y				
Welding									Y			
Complete Transformer (IS:11171 / IEC 60076)	Y										Y	Y

Notes: 1) This is an indicative List of test/checks. The manufacturer is to furnish a detailed Quality Plan indicating his practice and procedure along with relevant supporting documents during QP finalization for all item.

2) All major Bought out Items will be subject to NTPC approval.

□FD PANEL

A□r□□□□□□ C□□r□□□□r□□□□□□ I□□□ C□□ □□□□□□□ S□□ S□□□□□ A□□□□□ □□□	Electrical Properties	Mechanical Properties	Chemical Properties	Dimensions / Finish	Type/ Rating/Functional check	HV/IR	Routine test as per relevant std.	Constructional Features	IS:6005 ,Seven tank process	Paint finish/ shade/thickness	Mountings / BOM/ Make, Completeness	Interlock Functional & Operation Testing / Simulation check	Degree of Protection Test	Final testing as per Relevant IS/IEC
Sheet Steel (IS-513)		Y	Y	Y										
Aluminum / Copper Bus-bar(IS-5082/IS-613/IS-1987)	Y	Y	Y	Y										
Support Insulator (BS-2782/IEC-660/IS-10912)	Y	Y	Y	Y										
Control / Selector Switch(IS-6875)					Y	Y	Y							
Contactor/ MCB(IS-13947)					Y	Y	Y							
O/L Protection relays(IS-3231)					Y		Y							
C.T /V.T/ Indicating Meter(IS-2705/3156/1248)					Y	Y	Y							
Fuse/ Fuse carrier(IS-13703)					Y	Y	Y							
Terminals/lugs/pvc wires(IS-13947//IS-694)	Y			Y	Y	Y	Y							
Timers(IS-3231)					Y	Y	Y							
Push Button/ Lamp/ (IS-6875)					Y	Y	Y							
Control Transformer (IS-12021)					Y	Y	Y							
Mimic, Annunciater					Y		Y							
GASKET(IS-11149)		Y	Y	Y	Y		Y							
Fabrication								Y						
Pretreatment & Painting									Y	Y				
VFD panel										Y	Y	Y	Y	Y

NOTE:

1. This is an indicative list of Test/ Checks. The manufacturer to furnish a detailed Quality Plan indicating the practice and procedure along with relevant supporting documents.
2. All major Bought Out Items will be subject to NTPC approval.

CONTROL AND INSTRUMENTATION SYSTEM

SUB-SECTION-V-QC1

MEASURING INSTRUMENT
(PRIMARY AND SECONDARY)

MEASURING INSTRUMENTS (PRIMARY AND SECONDARY)									
TESTS / ITEMS	Dimensions (R)	Make, Model, Type, Rating (R)	Process / Electrical connection (R)	Calibration (R)	Test as per standard(R)	Insulation Resistance (R)	IBR Certification (if applicable)(R)	Hydro Test(R)	Material Test certificate ®
1. PR Gauge (IS-3624)	Y	Y	Y	Y	Y				
2. Temp. Gauge (BS-5235)	Y	Y	Y	Y	Y				
3. Pr./D.P.Switch(BS-6134)	Y	Y	Y	Y	Y	Y			
4. Electronic Transmitter(IEC-60770)	Y	Y	Y	Y	Y	Y			
5. Temp. Switch	Y	Y	Y	Y	Y	Y			
6. Recorder(IS-9319/ANSI C-39.4)	Y	Y	Y	Y	Y	Y			
7. Vertical indicators	Y	Y	Y	Y		Y			
8. Digital Indicators	Y	Y	Y	Y		Y			
9. Integrators	Y	Y	Y	Y					
10. Electrical Metering Instrument (IS-1248)	Y	Y	Y	Y	Y	Y			
11. Transducer (IEC-688)	Y	Y	Y	Y	Y	Y			
12. Thermocouples (IEC – 754 / ANSI-MC-96.1)	Y	Y	Y	Y	Y	Y			
13. RTD(IEC-751)	Y	Y	Y	Y	Y	Y			
14. Thermowell	Y		Y				Y	Y	Y
R-Routine Test A- Acceptance Test Y – Test applicable									
: Note: 1) This is an indicative list of tests/checks. The manufacturer is to furnish a detailed quality plan indicating the Practices and Procedure adopted along with relevant supporting documents.									

MEASURING INSTRUMENTS (PRIMARY AND SECONDARY)

TESTS / ITEMS	Dimensions (R)	Make, Model, Type, Rating (R)	Process / Electrical connection (R)	Calibration (R)	Requirement as per standard (R)	WPS approval (A)	Non-destructive testing (R)	Calculation for accuracy (R)	Insulation Resistance (R)	IBR Certification as applicable (R)	Hydro test (R)	Material test certificate (A)
15. Cold junction compensation box	Y	Y	Y	Y					Y			
16. Orifice plate(BS-1042)	Y	Y	Y	Y *	Y	Y **	Y **			Y	Y **	Y
17. Flow nozzle(BS-1042)	Y	Y	Y	Y *	Y	Y	Y			Y	Y	Y
18. Impact head type element	Y	Y	Y					Y				Y
19. Level transmitter/float type switch	Y	Y	Y	Y					Y	Y	Y	Y
20. Analysers	Y	Y	Y	Y								
21. Dust emission monitors	Y	Y	Y	Y								
*Calibration to be carried out on one flow element of each type and size if calibration carried out as type test same shall not be repeated.												
** If applicable												

R-Routine Test A- Acceptance Test Y – Test applicable

Note: 1) This is an indicative list of tests/checks. The manufacturer is to furnish a detailed quality plan indicating the Practices and Procedure adopted along with relevant supporting documents.

SUB-SECTION-V-QC2

PROCESS CONNECTION AND PIPING

Pr□□□□□□C□□□□□□□□□ □ □□□□□ FOR C□I SYSTEMS

TESTS / ITEMS	Visual ®	GA, BOM, Layout of component & construction feature®	Dimension ®	Paint Shade/thickness ®	Flattening, flaring, hydrotest, hardness check as per ASTM standard	Component Ratings ®	Wiring ®	Make, Model, Type, Rating®	IR & HV ®	Review of TC for instrument/devices (R)	Accessability of TBs/Devices ®	Illumination,grounding ®	Tubing ®	Leak/Hydro test(A)	Chemical/physical properties of material (A)	Proof pressure test,Dismantling & reassembly test,Hydrulic impulse and vibration test (R)	Tests as per standards & specification
Local Instrument enclosure	Y	Y	Y	Y		Y	Y	Y	Y	Y	Y	Y	Y	Y			
Local instruments racks	Y	Y	Y	Y		Y	Y	Y	Y	Y	Y	Y	Y	Y			
Junction Box	Y	Y	Y	Y *		Y		Y	Y								
Gauge Board	Y	Y	Y	Y		Y		Y		Y			Y	Y			
Impulse pipes and tubes	Y		Y		Y			Y							Y		
Socket weld fittings ANSI B-16.11	Y		Y					Y							Y		Y
Compression fittings	Y		Y					Y						Y	Y	Y	
Instrument valves & Valve manifolds	Y		Y					Y						Y	Y		
Copper tubings ASTM B75	Y							Y									Y

*-applicable for painted junction boxes.

Note: R-Routine Test A- Acceptance Test Y – Test applicable

Note: This is an indicative list of tests/checks. The manufacturer is to furnish a detailed quality plan indicating the Practices and Procedure adopted alongwith relevant supporting documents.

SUB-SECTION-V-QC3

INSTRUMENTATION CABLES

INSTRUMENTATION CABLE

TESTS / ITEMS	Conductor Resistance ® & (A)	High Voltage ® & (A)	Insulation Resistance ® & (A)	Constructional detail, dimensions (A)	Outer-Sheathe/core marking, end sealing (A)	Thermal Stability (A) +	Visual, Surface finish (A) +	Electrical Parameters ** (A) +	Persulphate Test (A) +	Overall/Coverage/Continuity (A)	Swidesh chimney Test (SS-4241475) (A) ++	FRLS Test * (A) ++	Tensile & Elongation before & after aging (A) ++	Vol. Resistivity. at room & Elevated Temp. (A) ++	Spark test report review ®
1. I□□r□□ □□□□□□□□ □□ □□□d □□d □□□d□d															
Conductor(IS-8130)	Y			Y			Y								
Insulation(VDE-207)				Y	Y	Y	Y						Y		Y
Pairing/Twisting				Y	Y		Y								
Shielding				Y			Y			Y					
Drain wire	Y			Y			Y		Y	Y					
Inner Sheath				Y	Y	Y	Y					Y	Y		
Outer Sheath				Y	Y	Y	Y					Y	Y		
Over all cable	Y	Y	Y	Y	Y		Y	Y			Y			Y	
Cable Drums(IS-10418)				Y			Y								

N□□□ : High Temp. cables shall be subjected to tests as per VDE-207(Part-6) Compensating cables shall be checked for Thermal EMF/Endurance test as per IS 8784.

N□□□ : This is an indicative list of tests/checks. The manufacture is to furnish a detailed Quality Plan indicating his practice & Procedure along with relevant supporting documents during QP finalization for all items.

N□□□ : ® - Routine Test A - Acceptance Test Y - Test Applicable

N□□□ : Sampling Plan for Acceptance test shall be as per IS 8784 (As applicable)

- * FRLS Tests: Oxygen / Temp Index (ASTM D-2863), Smoke Density Rating (ASTM – D 2843), HCL Emission (IEC-754-1)
- ** Characteristic Impedance, Attenuation, Mutual Capacitance, Cross Talk (As applicable)

\+ Sample size will be One No. of each size/type per lot.

++ Sample size will be One No. sample for complete lot offered irrespective of size/type.

SUB-SECTION-V-QC4

CONTROL DESK PLC PANEL SMOKE DETECTOR FIRE ALARM □ CONTROL SYSTEM

CONTROL DESK, PLC PANEL, SMOKE DETECTOR, FIRE ALARM & CONTROL SYSTEM

TESTS / ITEMS	Visual ®	GA, BOM ,Lay Out of components ®	Dimensions ®	Paint Shade/Thickness/Adhesion ®	Alignment of Section ®	Component Rating/ Make / Type ®	Wiring ®	IR & HV ®	Review of TC for instruments/ Devices/ Recorders, Indicators/ osaic Items/ Transducers ®	Accessibility of TBS/ Devices ®	Illumination ®	Functional Check for Control Element ,	Mimic ®	Test as per IEC 1131 ®*	Test as per Std ® & (A)
1. Control Desk	Y	Y	Y	Y	Y	Y	Y	Y	Y	Y	Y	Y	Y		
2. Annunciation/ Control/ PLC Panel	Y	Y	Y	Y		Y	Y	Y	Y	Y	Y			Y	Y
3.Smoke Detectors (UL-268,EN-54 PT-7), Heat Detectors(UL-521/EN 54 PT-5) Annunciation/ Control Panel (UL -864, EN-54, PT-2)															Y

Note: 1) This is an indicative list of test/ checks. The manufacturer is to furnish a detailed quality plan indicating the Practice and Procedure alongwith relevant supporting documents.

- *Applicable for PLC
- Y - Test Applicable , ® - Routine Test (A) - Acceptance Test

SUB-SECTION-V-QC5

POWER SUPPLY SYSTEM

POWER SUPPLY FOR C&I SYSTEMS (UPS/BATTERY/BATTERY CHARGER/ACDB/DCDB)

ITEMS \ TESTS	Visual/dimension/rating/ Paint Adhesion/ Thickness (R)	General arrangement/BOM/make of components /Mimic ®	Efficiency ,regulation(R)	Input voltage variation (A)	Out put voltage and frequency adj.range(A)	Premilinary light load test(R)	Load transfer retransfer test (R) *	AC input faliure and return test (R)	Parralel operation and current divison(R)	Relative harmonic content(R)	Restart with PRI A.C and battery (separately)(R)	System transfer and retransfer (R)*	Asynchronous transfer(R)	Ripple content(R)	Load limiter operation (R)	IR/HV(R)	Tests as per standard &specification (R)&(A)
UPS/CONVERTER (IEC-146 PT-4)	Y	Y	Y	Y	Y	Y	Y	Y	Y	Y	Y	Y	Y	Y	Y	Y	Y
VOLTAGE STABILISER	Y	Y	Y	Y	Y					Y		Y				Y	
LEAD ACID BATTERY(TUBLAR)-IS-1651																	Y
LEAD ACID BATTERY (PLANTE)-IS-1652																	Y
NICKEL CADMIUM BATTERY(IS-10918/IEC-623)																	Y
SMF BATTERY																	Y
ACDB/DCDB	Y	Y														Y	Y
BATTERY CHARGER	Y	Y	Y	Y	Y				Y					Y	Y	Y	Y

R-Routine Test A- Acceptance Test Y – Test applicable

* Transfer time and Over shoot /under shoot during load & system transfer shall be recorded .

Note: 1) This is an indicative list of tests/checks. The manufacturer is to furnish a detailed quality plan indicating the Practices and Procedure adopted alongwith relevant supporting documents.

CIVIL WORKS

SUB-SECTION-V-QD1

CI□IL WORKS

SAMPLING, TESTING AND QUALITY ASSURANCE FOR CIVIL WORKS

1.0.0 INTRODUCTION

1.1.0 This part of the specification covers the sampling, testing and quality assurance requirement (including construction tolerances and acceptance criteria) for all civil and structural works covered in this specification including excavation and filling, cast in situ concrete and allied works, fabrication and erection of structural steel works, masonry / sheeting and allied works, finishing items etc.

1.2.0 This part of the technical specification shall be read in conjunction with other Parts of the technical specifications, general technical requirements & erection conditions of the contract. Wherever IS code or standards have been referred they shall be the latest revisions.

1.3.0 All tests required for all materials (bought by Contractor) and workmanship shall be done / got done by the contractor at his own cost. The rate for respective items of work or price shall include the cost for all works, activities, equipment, instrument, personnel, material etc. whatsoever associated to comply with sampling, testing and quality assurance requirement including construction tolerances and acceptance criteria and as specified in subsequent clauses of this part.

1.4.0 The Contractor shall provide the facilities whatsoever required and also bear the cost for all sampling, testing and quality assurance in the field and in the laboratory. The Contractor shall carry out all sampling and testing in accordance with the relevant Indian standards and / or international standards and this technical specification. Where no specific testing procedure is mentioned, the tests shall be carried out as per the best prevalent engineering practices and to the directions of the Engineer. All sampling shall be done in the presence of the Engineer or his authorised representative. The Contractor shall establish the QA&QC laboratory at site and all field tests shall be done in the presence of the Engineer and / or his authorised representative. The tests which cannot be carried out in the field laboratory shall be done at a laboratory of repute such as CSMRS, NCBM, IITs, National Test House, Kolkata etc. as agreed by the Engineer. The test samples for such test shall be jointly selected and sealed by the engineer and thereafter these shall be sent to the concerned laboratory through the covering letter signed by FQA representative of the engineer. The cost of transportation and other associative cost including the test charges shall be borne by the contractor. These cost shall deemed to be included in the respective item of work in the contract. If the Engineer desires to witness such tests at laboratory, Contractor shall arrange to conduct the test in his presence.

1.5.0 The recommendations and suitability of material for concreting and other building materials like brick, cement, aggregates etc., shall be ascertained by contractor prior to start of work.

Preliminary evaluation of aggregate and its evaluation for potential alkali-aggregate reactivity as per following scope of work shall be done:-

A. Evaluation of Aggregates:

I. To carry out different tests on coarse aggregate sample i.e. specific gravity, water absorption, sieve analysis, deleterious material; soundness, crushing value, impact value, abrasion value, elongation index and flakiness index, as per IS: 2386.

II. To carry out different tests on fine aggregate sample i.e. specific gravity, water absorption, sieve analysis soundness, deleterious material, silt content, clay content and organic impurities as per IS: 2386.

III. To prepare evaluation report based on test results of I) and ii) above and to advise regarding suitability of fine and coarse aggregates.

B. Evaluation of Aggregates for Potential Alkali-Aggregate Reactivity:

Evaluation for Potential Alkali-Aggregate reactivity as per following scope of work:

I. To carry out petrographic analysis and accelerated Mortar bar Test on aggregate samples (1N NaOH at 80 deg. Centigrade for 14 days as per ASTM 1260, or the method established/ developed by CSMRS for 22days test.

II. To prepare a report based on test results of I) above and to advise regarding suitability of aggregates and further testing required if any.

The contractor shall initiate the action with regard to the above mentioned evaluation of aggregates and other building material, so as to ensure timely completion of these tests thereby not affecting any project work. All records shall be submitted, unless specified otherwise, as per the format developed by the Contractor and approved by the Engineer.

1.6.0 The Contractor shall enclose a comprehensive list of bought out items (BOIs) envisaged in the contract for carrying out fabrication/ manufacturing/ erection/ construction/ commissioning activities, procurement of forged, cast, semi-finished and finished components/equipment etc and shall indicate the names of reputed manufacturers for each of them in their bid proposal. The items envisaged by the Contractor to be procured from these manufacturers shall meet the specification requirement. An indicative list of major bought out items (not exhaustive) for civil works is enclosed at **Annexure-I**, for which the contractor shall submit the requisite details / lists of manufacturer's in their bid proposal.

1.7.0 The list of manufacturers / sub-vendors of each of the BOIs identified / indicated by the Contractor shall be discussed / reviewed by the NTPC during post bid discussions and the list of proposed manufacturers / sub-vendors for each of the BOI shall be agreed/ approved. The list of manufacturers for all the BOIs envisaged in contract shall be included in the bid proposal and the same shall be discussed for finalization during the post bid discussions before placement of award. Where the manufacturers are placed in "DR" (Details required) category, the details of the manufacturers / sub-vendors placed in the "DR" category shall be submitted to the NTPC for approval within the period agreed at the time of post bid discussions. The Contractor's proposal shall include vendor's site facilities, expertise, facilities established at the respective works, the process capability, process stabilization, QC systems followed, experience list, etc. along with his own technical evaluation for identified sub-Contractors proposed. The formats for furnishing above details

shall be given to the Contractor at post bid discussion stage. Monthly progress reports on sub-Contractor detail submission / approval shall be furnished on format no. QS-01-QAI-P-02/F1. The NTPC shall furnish other relevant formats for information/ clarification for manufacturers / sub-vendors approval to the Contractor at the time of post bid discussions (Main supplier's evaluation report Format No: QA-01-QAI-P-04/F1-R0 and Sub supplier questionnaire Format no: QA-01-QAI-P-04/F2-R0). Such manufacturers / sub-vendors approval shall not relieve the Contractor from any obligation, duty or responsibility under the contract.

1.8.0 Structural steel and Reinforcement steel supply if in the scope of the contractor shall be procured from Main Steel Producers enlisted by NTPC from time to time. Currently, Main Steel Producers enlisted by NTPC are SAIL, JSW Steel Ltd, Jindal Steel & Power, Tata steel Ltd. (for Reinforcement steel/TMT bars), RINL (for long products/Rolled sections and Reinforcement steel/TMT bars), Essar Steel India Ltd. (for Flat products/ Steel Plates), Electrosteel steel Ltd. (for Reinforcement steel/TMT bars) and Monnet Ispat and Energy Ltd. (for long products/Rolled sections and Reinforcement steel/TMT bars). Subsequently, if any new Main Steel Producer/s are enlisted, they may also be considered for procurement during execution of the contract if proposed by the Contractor.

1.9.0 The Field Quality Plans shall detail out all the equipment, the quality practices and procedures etc. to be followed by the Contractor's "Site Quality Control Organisation", during various stages of site activities starting from receipt of materials/equipment at site.

The contractor shall furnish complete QA & QC programme (QAP) for the work envisaged which may include the following:-

- The organisation structure for the management and implementation of the proposed Quality Assurance Programme.
- Documentation Control System
- The procedure for procurement of materials and source inspection.
- System for site controls including process controls.
- Control of non-conforming items and systems for corrective action
- Inspection and test procedures for site activities
- System for indication and appraisal of inspection status
- System for maintenance of records
- System for handling, storage and delivery.
- Quality Plan detailing out quality practices and procedures, relevant standards and acceptance levels for all types of work under the scope of this contract.

The Contractor shall appoint a dedicated, experienced and competent quality management representative on site, preferably directly reporting to the Project Manager, supported by experienced personnel, to ensure the effective implementation of the approved quality assurance programme.

The onsite quality management representative shall have the organisational freedom and authority to implement the requirements of these quality assurance arrangements, free from commercial and programme restraints.

The QA & QC setup of the contractor shall consist of qualified and experienced engineers, with their supporting staff. The QA&QC set up in addition to requisite mechanical & electrical engineers shall consist sufficient graduate civil engineers & supervisors to take care of quality assurance activities of both site & laboratory. An indicative QA & QC organization chart is attached at **Annexure-III**. The deployment of man power for QA & QC set up shall be affected on the basis of agreed manpower deployment schedule, which shall be prepared by the contractor based on the L-2 network and the same shall be submitted to the Engineer-in-charge for acceptance.

Based on the schedule of work agreed with the Engineer-in-charge and the approved FQP, the Contractor shall prepare a schedule of tests and submit them to the Engineer-in-charge and organise to carry out the tests as scheduled/ agreed.

The QA&QC laboratory shall have all necessary equipment, instruments and shall be managed by a qualified / experienced person. An indicative list of test equipment is attached at **Annexure-II**. All these testing equipment shall be provided by the contractor at his own cost. The contractor shall maintain the equipment in good working condition along with valid calibration certificates, for the duration of the contract. Any other equipment though required for testing but not listed in the equipment list shall be provided / arranged by the contractor at his own cost.

QA&QC laboratory building shall be constructed by the Contractor at their own cost. The laboratory building shall be constructed and installed with the appropriate facilities. Temperature and humidity controls shall be available wherever necessary during testing of samples.

1.10.0 The contractor shall prepare and obtain approval of the Owner of the Field Quality Plan (FQP) well before the start of the work. This FQP shall cover for all the items / activities covered in the contract/schedule of items and required for completion of the work.

1.11.0 All materials / components and equipment covered under the scope of work which are to be manufactured at shop/ factory of the vendor/subvendor shall be covered under a comprehensive quality assurance programme. The detailed quality plan for manufacturing shall be drawn up by the contractor and will be submitted to the owner for approval in the prescribed format for manufacturing quality plan.

Manufacturing Quality Plan (MQP) shall detail out all the components and equipment, various test/inspection, to be carried out as per the requirements of this specification and standards mentioned therein. The quality practices and procedures followed by Bidder's/Sub-Bidder's/ sub-supplier's Quality Control Organization shall include , the relevant reference documents and standards, acceptance norms, inspection documents raised etc., during all stages of material procurement, manufacture, assembly and final testing / performance testing . The quality plan shall be submitted in electronic media e.g. CD or E-mail in addition to hard copy, for review and approval. After approval the same shall be finally submitted in compiled form on CD.

1.12.0 The contractor shall store and handle the materials as per the requirements of the relevant standards at his own cost.

1.13.0 All the equipment shall be duly calibrated by NABL/ NPL accredited laboratories/accreditation agencies.

1.14.0 The Contractor shall submit to the NTPC Field Welding Schedule for field welding activities in the format No.: QS-01-CQA-W11/F1, this format shall be furnished to the Contractor at pre-award stage. The field-welding schedule shall be submitted to the NTPC along with all supporting documents, like welding procedures, heat treatment procedures, NDT procedures etc. at least ninety days before schedule start of erection work at site. The Contractor shall submit Welding Procedure Specification (WPS) in the format No: QS-01-QAI-W-06/F1 for NTPC approval/ acceptance, this format shall be furnished to the Contractor during post bid discussion stage.

All welding and brazing shall be carried out as per procedure drawn and qualified in accordance with requirements of ASME Section IX/BS-4870 or other International equivalent standard acceptable to the NTPC.

All welding/brazing procedures shall be submitted to the NTPC or its authorized representative for approval prior to carrying out the welding/brazing.

All brazers, welders and welding operators employed on any part of the contract either in the Contractor's/ sub-Contractor's works or at site or elsewhere shall be qualified as per AWSD1.1/ASME Section-IX or BS-4871 or other equivalent International Standards acceptable to the NTPC.

Welding procedure qualification and Welder qualification test results shall be furnished to the NTPC for approval. However, where required by the NTPC, tests shall be conducted in presence of NTPC/authorized representative.

No welding shall be carried out on cast iron components for repair.

All the heat treatment results shall be recorded on time temperature charts and verified with recommended regimes.

All Non-destructive examination shall be performed in accordance with written procedures as per International Standards and as mentioned elsewhere in the technical specification; The NDT operator shall be qualified as per SNT-TC-IA (of the American Society of non-destructive examination). NDT shall be recorded in a report, which includes details of methods and equipment used, result/evaluation, job data and identification of personnel employed and details of co-relation of the test report with the job. The records of RT (Films) and UT (inspection records or printed reports if possible) shall be documented and produced to NTPC.

1.15.0 The Contractor shall associate themselves with the reputed specialized blasting agency such as CMRI, NIRM for trials blasts, design blasts, blasting pattern, monitoring of blast during the blasting operations at site. The blasting operation

shall remain in charge of a responsible, competent, authorized and experienced supervisor (Man-In-Charge) and thoroughly acquainted workmen. All blasting work shall be done as per approved blasting scheme/ design/ pattern in line with the technical specification requirements and all statutory laws, rules, regulations, relevant standards pertaining to the acquisition, transport, storage, handling along with use of explosives shall be strictly followed by the Contractor.

The Contractor shall install and operate equipments (such as tri-axial seismograph) for continuous monitoring and control of blast induced vibrations, noise level/ air pressure, dust, silica and noxious gases during all blasting operations in line with the Technical Specification requirements in association with the specialized blasting agency.

The contractor shall submit the un-priced copy of the award on the specialized blasting agencies to NTPC, highlighting the scope of services/ work awarded to them by contractor. The services of such specialized blasting agency shall be available through out the period in which the blasting work is undertaken at site.

1.16.0 **ASSOCIATED DOCUMENT FOR QUALITY ASSURANCE PROGRAMME:**

i. Field Quality Plan Format No.: QS-01-QAI-P-09/F2-R1
ii. Indicative list of Field Quality Laboratory and Survey equipment list (Annexure-II)
iii. Indicative QA&QC Manpower requirements (Annexure-III)
iv. Indicative Field Quality Plan for Civil Works (Annexure-IV)
v. Indicative Field Quality Plan for Structural Steel Works (Annexure-V)
vi. Manufacturing Quality Plan Format No.: QS-01-QAI-P-09/F1-R1
vii. Status of items requiring Quality Plan and sub supplier approval. Format No.: QS-01-QAI-P-02/F1-R0
viii. List of items requiring quality plan and sub supplier approval. Format No.: QS-01-QAI-P-01/F3-R0
ix. Field Welding Schedule Format No.: QS-01-CQA-W-11/F1-R0
x. Welding Procedure Specification (WPS) Format No.: QS-01-QAI-W-06/F1-R0
xi. Main supplier's evaluation report Format No: QA-01-QAI-P-04/F1-R2
xii. Sub supplier questionnaire Format no: QA-01-QAI-P-04/F2-R1

(Note: The field quality plan attached is indicative and the contractor shall prepare the field Quality plan covering the entire scope of work in the contract and submit the same to corporate QA for acceptance/approval. However any addition or deletion in the scope of work, during detailed engineering shall be accordingly added/ deducted from the Field Quality Plan)

2.0.0 GENERAL QA REQUIREMENTS

2.1.0 **STORAGE AND HANDLING OF COMMON BUILDING MATERIALS**

All materials shall be stacked and stored by the Contractor as per IS-4082 and as per the requirements specified in NTPC Technical Specification.

2.2.0 **EXCAVATION AND FILLING WORKS**

The contractor shall submit a work methodology covering various items of works for all stages of excavation and filling works. This methodology shall broadly include the quantity wise and classification wise identification of source of excavation and filling, suitability tests as per specification requirements, method of stockpiling, transportation, placement, spreading , compaction, equipment, list of protocols, in-situ tests, third party lab test if required, acceptance checks for final clearance.

For blasting work at site if required, the contractor shall associate themselves with the reputed specialized blasting agency such as CMRI, NIRM for trials blasts, design blasts, blasting pattern, monitoring of blast during the blasting operations at site. The contractor shall install and operate equipment (such as tri-axial seismograph) for continuous monitoring and control of blast induced vibrations, noise level/ air pressure, dust, silica and noxious gases during all blasting operations in line with the technical specification requirements in association with the specialized blasting agency. The contractor shall submit the un-priced copy of the award on the specialized blasting agencies to NTPC, highlighting the scope of services / work awarded to them by contractor. The services of such specialized blasting agency shall be available through out the period in which the blasting work is undertaken at site. The blasting operation shall remain in charge of a responsible, competent, authorized and experienced supervisor (man-in-charge) and thoroughly acquainted workmen. All blasting work shall be done as per approved blasting scheme/ design/ pattern in line with the technical specification requirements and all statutory laws, rules, regulations, relevant standards pertaining to the acquisition, transport, storage, handling along with use of explosives shall be strictly followed by the contractor.

Tolerance for finished surface level shall be within 20 mm of the level shown in the drawing. For an unimportant area, tolerance up to +75mm shall be acceptable at the discretion of the engineer. However, these tolerances shall be applicable for localized areas only.

Acceptance criteria shall be

a) When only one set of sample is tested, then all individual samples collected and tested should pass without any deviation

b) For retest of any sample two additional samples shall be collected and tested, and both should pass without any deviation.

c) Where a large number of samples are tested for a particular test then 9 samples out of every 10 consecutive samples tested shall meet the specification requirement.

2.3.0 MASONRY AND ALLIED WORKS

The execution, finishing, testing and acceptance of masonry related works shall be as per the provisions of technical specifications / relevant practices IS code. Local

depressions on account of faulty workmanship, broken / chipped edges shall not be acceptable.

All masonry shall be built true and plumb within the tolerances prescribed as below. Care shall be taken to keep the perpends properly aligned. Unless specified otherwise the tolerances in construction of masonry works shall be as below:

Sl. No.	Type of Check	Tolerance
	Deviation in verticality in total height of any wall of a building	Shall not exceed ± 12.5mm (more than one storey) ± 6mm per 3m height (within a storey)
	Deviation from the position shown on the plan of any brickwork	Shall not exceed 12.5mm (more than one storey)
	Relative displacement between load bearing walls in adjacent storeys intended to be in vertical alignment	Shall not exceed 6mm
	Deviation of bed joint from horizontal in any length, and it	Shall not exceed 6mm (upto 12m) Shall not exceed 12.5mm total (in any length over 12m)
	Deviation from the specified thickness of bed-joints, cross-joints or perpends	Shall not exceed ± 3mm
	Finished plastered surface	Deviation not more than 4 mm when checked with a straight edge of 2 m length placed against the surface
	The average thickness of plaster	Not be less than the specified thickness
	The minimum thickness over any portion of the surface	Not less than the specified thickness by more than 3 mm for plaster thickness above 12mm and 1 mm for ceiling plaster

2.4.0 CONCRETE WORKS

For concreting works provisions of technical specifications and IS: 456 shall apply. A detailed methodology for concrete works shall be submitted by the contractor to NTPC for approval. The methodology may require change / modification based on the site conditions, for which suitable revisions shall be submitted.

The methodology for concrete works shall broadly contain the suitability of source of aggregates, cement, admixture, water and reinforcement steel, etc. The available

concrete mix design recommended from a specialist institute, results of trial mix carried out at site, method / control of batching, mixing, transportation, layer wise placement, compaction, fixing / removal of form work, staging, fixing of water stops at appropriate locations along with specials, expansion joints, contraction joints and construction joints, cover blocks and method of curing, methodology of repair of newly placed hardened concrete, testing and sampling of concrete during production and placement and acceptance checks for final clearance.

The equipment, deployment of manpower and machinery shall arranged by the contractor to ensure the continuous rate of placement of specified grade of concrete so as to prevent segregation, bleeding, formation of cold joints, temperature control for concreting in extreme weather conditions and for mass concreting works.

Exposed surfaces of concrete shall be kept continuously in a damp or wet condition for at least seven days from the date of placing concrete in case of ordinary Portland cement, not be less than 10 days for concrete exposed to dry and hot weather conditions, at least 10 days or period may be extended to 14 days where mineral admixtures or blended cements are used. Approved curing compounds may be used in lieu of moist curing with the permission of engineer-in-charge.

Reinforcement steel shall conform to relevant IS codes. Lapping / spacing of reinforcement shall be so staggered that under no circumstances more than 50% of bars at any cross section shall be lapped. Corrosion resistance Steel shall be used for the foundations wherever specified in the technical specification. Sample test for 3% of the number of mechanical bars grips subject to a minimum of three, shall be carried out up to the yield strength of reinforcement of bars.

Test shall be conducted for the water tightness of the liquid retaining structures as per technical specifications, IS 3370 and IS 6494.

All the materials, equipments, processes used in pre cast concrete work shall conform to the requirements for the cast-in-situ concrete.

If fly ash is used in concrete, source of supply shall be checked for suitability as per IS 3812 (Part-I). Routine tests for retention of particles on 45µ sieve and loss on ignition shall be carried out on each lot of fly ash before its use. The storage of fly ash shall be similar to that of cement. Separate Silo for fly ash shall be provided in the batching plant. Validation of Mix design using fly ash shall be carried out by an approved specialist agency, before start of concrete production.

The acceptance criteria of concrete shall be in accordance with clause no.16 of IS 456. However in exceptional circumstances and that too in non-critical areas, the engineer may accept concrete work which is marginally unacceptable as per the criteria laid down in IS 456. For such accepted work, payment shall be made at a reduced rate pro rata to the concrete cube strength obtained, against that stipulated.

All records of concreting, reinforcement, testing of materials, as-built dimensions, the details of the rectification, etc, shall be maintained as given below. Four copies of such record in a bound form shall be submitted to owner for their record and future reference.

i. Testing data / report of aggregates including petrographic examination & potential reactivity of aggregate and repeated temperature cycle tests wherever specified

ii. Mix design details and record of trial mixes carried out at site

iii. Testing records of admixture as per IS-9103 / ASTM C494 including third party test reports.

iv. Approved scheme for concreting

v. Hourly records of concreting including pour card

vi. Protocol indicating the dimensional tolerance and details of inserts

vii. Records giving the details of rectification giving the location of grouting, the quantity of grout used at each location, type of grout used

viii. Bar bending schedule

ix. Location and details of mechanical anchoring used for reinforcement

x. Protocol giving the details of checking of reinforcements before concreting and conformance to the reinforcement details as shown in the construction drawings

xi. Photographs showing the areas where rectification works have been carried out. Photographs should be taken before and after rectification

xii. Temperature control record of concrete at the time of placement if applicable.

xiii. Details of curing, staging and fixing / removal of formwork, checklist for formwork as per Clause 9.9 and Annexure-C of IS 14687 including all machine foundations

xiv. Batching Plant shall be calibrated regularly at least once in a 3 months. Computerized output shall be taken for each batch of production of concrete. For concreting works of ash pipe pedestals, mixer with weight batcher may be used. Production and supply of concrete from batching plant shall conform to the provisions of IS 4926

xv. Dimensions (length, cross sectional dimensions, straightness, squareness, and flatness) and tolerances for pre cast members as per NTPC Technical Specification. Load test on Pre cast members (except pre- cast tiles to be laid in the reservoir) shall be carried out @ 1% up to 1000 nos., @0.5% from more than 1000 nos. precast members of one type. The load test shall be carried out as per the provisions of IS-456 and relevant IS code.

TOLERANCES			
Description of Item/ Structural Element		**Max (mm)**	**Min (mm)**
Cast In Situ Concrete			
1.	Faces of concrete in foundations and structural members against which back fill is placed	+25	-10
2.	Eccentricity of footing as percentage of footing width in the direction of placement	2% but limited to 50mm	
3.	Top surfaces of slabs and of concrete to receive base plates to be grouted	+5	-5
4.	Alignment of beams, lintels, columns, walls, slabs and similar structural elements	+5	-5
5.	Cross sectional dimensions of walls, slabs and similar structural elements	+5	-5

TOLERANCES				
Description of Item/ Structural Element			**Max (mm)**	**Min (mm)**
6.	Deviation from specified dimensions of cross-section of columns and beams		+12	-6
7.	Alignment of holding down bolts without sleeves		+1.5	-1.5
8.	Alignment of holding down bolts with sleeves		+5	-5
9.	Level of holding down bolt assemblies		+10	-10
10.	Embedded Parts (in any direction).		+5	-5
11.	Level of embedment for equipment support		+1.5	0
12.	Level of embedment for other embedded parts		+5	-5
13.	Centers of pockets or holes with greatest lateral dimension not exceeding 150mm		+10	-10
14.	Variation in steps • Riser • Tread		 +1.5 +3.0	 -1.5 -3.0
	Pre- Cast Concrete			
15.	Length:	+/- 0.1 percent	+/- 5	+ 10
16.	Straightness or Bow	1/750 of the length	+/- 5	+/- 10
17.	Cross-sectional dimensions	+/- 3 mm or +/- 0.1 percent whichever is greater		
18.	Squareness:	When considering the squareness of the corner the length of the two adjacent sides being checked shall be taken as the base line. The shorter side shall not vary in length from the perpendicular by more than 5 mm.		
19.	Flatness:	The maximum deviation from a 1.5m straight edge placed in any position on a nominal plant surface shall not exceed 5 mm.		
	Placing of reinforcement and for cover (Cover blocks shall be of same grade of concrete in which these would be embedded)		Clause 12.3.1 and 12.3.2 of IS 456	
	Formwork		Clause 9.6 of IS 14687 and 11.1 of IS 456	
	Batching		Clause 10.2.2 of IS 456	

2.5.0 STRUCTURAL STEEL WORK

For structural steel works provisions of technical specifications and IS: 800 shall apply. A detailed methodology for structural steel works shall be submitted by the contractor to NTPC for approval. The methodology may require change / modification based on the site conditions, for which suitable revisions shall be submitted.

The contractor shall submit the welding procedures specification (WPS), heat treatment procedures, NDT procedures etc. at least ninety days before scheduled start of erection work at site. All welding and brazing shall be submitted to the NTPC

and carried out as per procedure drawn and qualified in accordance with requirements of ASME Section IX/BS-4870 or other International equivalent standard acceptable to the NTPC.

All brazers, welders and welding operators employed on any part of the contract either in the contractor's / sub-contractor's works or at site or elsewhere shall be qualified as per AWSD1.1/ASME Section-IX or BS-4871 or other equivalent International Standards acceptable to the NTPC.

The records of welding procedure qualification and welder qualification test results shall be furnished to the NTPC for approval. However, where required by the NTPC, the tests shall be conducted in presence of NTPC / authorized representative.

No welding shall be carried out on cast iron components for repair. All the heat treatment results shall be recorded on time temperature charts and verified with recommended regimes.

All Non-destructive examination shall be performed in accordance with written procedures as per International Standards and as mentioned elsewhere in the technical specification. The NDT operator shall be qualified as per SNT-TC-IA (of the American Society of non-destructive examination). NDT shall be recorded in a report, which includes details of methods and equipment used, result/evaluation, job data and identification of personnel employed and details of co-relation of the test report with the job. The records of RT (Films) and UT (inspection records or printed reports if possible) shall be documented and produced to NTPC.

Low hydrogen electrode (AWS E-7018) for welding of High/Medium tensile steel, for M.S (IS 2062 Gr. A/Gr. B, IS 8500) sections thickness above 20mm shall be used. Preheating and Post weld heat treatment requirements shall be complied as specified in the technical specification / approved WPS.

The requirements of pre-heating shall be

Thickness of thickest part at the area of welding / heat affected zone	Welding using other than low hydrogen welding electrodes IS 2062	Welding using low hydrogen welding electrodes or submerged arc welding IS 2062
Upto 20 mm (including)	None	None
Over 20 mm to 40 mm (including)	Not allowed	200 C
Over 40 mm to 63 mm (including)	Not allowed	660 C
Over 63 mm	Not allowed	1100 C

The following tests / checks shall be carried out for structural steel works

SL. NO.	TESTS / CHECKS	QUANTUM / STANDARD
	Physical and chemical properties of material if supply in the scope of contractor	As per relevant codes, review of correlated mill test certificates or check testing in absence of MTC
	Ultrasonic test on plates above 40mm	As per ASTM A435

SL. NO.	TESTS / CHECKS	QUANTUM / STANDARD
	Welding procedure & welders qualification test	AWSD1.1/ASME Section-IX or BS-4871 or other equivalent International Standards
Fillet Weld		
	Macro-etch examination on production test coupons for main fillet welds	Minimum one joint per built up beams, columns and crane girder etc.
	Tension member of crane girder	Dye penetration test on 25% weld length
	All other fillet welds	DPT on 5% of weld length with minimum 300mm at each location
Butt Weld		
	DPT	100% after back gouging on all butt welds
	Mechanical testing of production test coupons	Minimum one joint per built up beam, column and crane girder.
	Radiography test on butt welds (In case of failure of any welds in SPOT/RT or UT the % of retesting shall be doubled at that particular location. Acceptance criteria of NDT on welds shall be as per AWS D1.1. Wherever RT is not feasible UT to be carried out with the approval of the engineer)	100% RT on butt welds of tension flange (bottom flange) of crane girders 10% RT weld length of each welder on butt welds,
	Ultrasonic testing on full penetration welds (other than butt welds)	100% UT on the web to flange joint of crane girder 10% UT on other full penetration joints
	Control assembly check in shop before erection	1st and further every 10th set of identical structure
	Dimensional tolerances during fabrication and erection	as per IS-7215 and IS-12843
	Surface Preparation and Paint thickness	SA 2 1/2 , By elcometer random after each coat, each member

2.6.0 **PAINTING WORKS**

Painting works shall be carried out as per the provisions of technical specifications. A detailed methodology for painting works shall be submitted by the contractor to NTPC for approval. The methodology may require change / modification based on the site conditions, for which suitable revisions shall be submitted.

The methodology for painting works shall broadly contain the source of approved brand of paints, shot / sand blasting as specified, minimum acceptable size of shot used for blasting, application of primer, intermediate coat and final coat, experience of applicator, etc. testing of painting work and acceptance checks for final clearance.

2.7.0 **SHEETING WORKS**

All bought out items shall be procured from the manufacturer's approved by engineer and tested as per relevant IS Codes/ Specification. Raw material of colour coated sheets shall meet the chemical & physical properties as per relevant standards / codes referred in the approved data sheet. It shall be tested for colour match, bare metal thickness, weight of Z/AZ coating, thickness of painting system, reverse impact, T-Bend adhesion, scratch resistance, salt spray test for 1000 Hrs and any other test / properties as specified in the technical specifications. Colour coated sheets shall be marked with video jet printing at the interval not more than 2m bearing manufacturer's name, date and time of manufacturing. Fasteners shall also be tested for 1000 hrs salt spray test as per the requirement of technical specifications.

Bonded Mineral Wool Insulation shall meet the requirements of thickness, density, thermal Conductivity, all other tests as per the technical specifications and IS-8183.

For sheet installation no gas cut opening shall be allowed at the site, whenever opening is specified these shall be properly cut in the factory and shall be filled with lipping / flashing for true shape / dimension etc. The sheets/ packets shall be stacked neatly clear off the ground at an angle to the ground, over a base pallet to provide drainage. Water / moisture should not be allowed to stagnate on surface, or in between layers. This can damage the coating, and cause corrosion.

2.8.0 TILE WORKS

The contractor shall submit the work methodology which shall include the type, grade and make of materials along with their technical data sheets, details, etc, clearance from E-I-C regarding leak proofness and damp proofness of parent concrete surface, surface preparation, the procedure of application, curing, testing and acceptance.

The agencies having adequate experience to execute the acid / alkali resistant lining works shall be engaged for executing the acid / alkali resistant lining works after obtaining the approval from the E-I-C.

The execution, finishing, testing and acceptance of tile works shall be as per the provisions of technical specifications. The material for tile works shall be procured from the NTPC approved brand / source. Local depressions on account of faulty workmanship, tiles / natural stones with cracked or broken / chipped edges shall not be acceptable.

The tests shall be carried out on acid resistant bricks / tile- water absorption, compressive strength, resistance to acid, flexural strength, dimensions and all other tests as per IS 4860 and IS 4457, bitumastic ready mixed paint as per IS 158, bitumastic as per IS 9510, potassium silicate, resin type and sulphur type mortars as per IS 4832, part I, II and III, surface preparation for painting as per IS 2395, epoxy painting shall be carried for required coating thickness and dry film thickness.

2.9.0 FIRE PROOF DOORS

Fire Proof doors shall be tested for the requirements mentioned in the Technical Specification. The type test of the doors shall be carried out at CBRI Roorkee for minimum 2 hours fire rating and its Fabrication drawing shall also be approved by CBRI, Roorkee. DFT of paint of Fire Proof Doors and its fittings and fixtures as per BOQ shall be checked. The doors shall be finished with suitable fire retardant painting system

2.10.0 WATER PROOFING

The execution, finishing, testing and acceptance of water proofing works shall be as per the provisions of technical specifications. The material for the works shall be procured from the NTPC approved brand / source and the works shall be executed by the authorized applicator of the supplier.

Water proofing shall be tested for water tightness by creating a pond of water minimum 25 mm height on area of 6 m x 6 m, for the period of 48 hrs on fully dried elastomeric membrane surfaces. Minimum 5% area of the roof shall be subjected to water tightness test. Such test necessarily be conducted on vulnerable areas like drain channel / drain head. No dampness shall be visible on the underneath side of roof (i.e. ceiling), parapet and well junctions etc. which have been subjected for testing. The above testing shall be carried out prior to application of wearing course.

2.11.0 PILING WORK (If Applicable)

For piling works provisions of technical specifications, approved drawings, BOQs and relevant IS codes / standards shall apply. The piling works shall be executed by the agency meeting the qualifying requirements as specified. A detailed methodology for piling works shall be submitted by the contractor to NTPC for approval. The methodology may require change / modification based on the site conditions, for which suitable revisions shall be submitted.

The methodology for piling works shall broadly contain the method of boring, stability of bore hole, termination criteria, tests / checks for termination level, fabrication of cage, cage lowering, concrete batching / mixing, transportation, placing, recording of the time of construction operations, method of conducting initial and routine load tests, testing and sampling of concrete during production and placement and acceptance checks on piles for final clearance.

The equipment, deployment of manpower and machinery shall be arranged by the contractor to prevent the collapse of bore hole and to ensure continuous rate of placement of specified grade of concrete.

The piling works shall be executed as per the technical specifications, approved drawings, relevant codes / standards, FQP and BOQ. In addition to the requirements of technical specifications, the following shall also be ensured while execution of piling works:

a) Time gap between completion of pile boring and start of concreting should be kept to the minimum. However the maximum time gap shall not be more than 6 hours.

b) Muck Debris should be removed from the pile bore by air lift technique(by keeping the tremie & air pipe as close as to bottom of pile bore) i.e. after completion of boring, after completion of SPT(wherever applicable), after lowering reinforcement cage, but before start of concreting.

c) Density of bentonite slurry shall be checked from the sample taken from the bottom of pile bore(not at 1.0 m above the bottom of the pile bore)

d) Minimum two welding sets shall be kept ready to join the two cages of reinforcement by engaging 3 or more welders. This will ensure the lowering of R/F cage in minimum time.

e) While lowering the R/F cage into the pile bore, two hooks shall always be used to ensure balanced/symmetrical insertion of cage into the pile bore.

f) Concrete cover blocks at the junction of two R/F cage shall be ensured before lowering the second segment.

g) Surge concreting of about 1.0 cum shall be ensured at the start of concreting (i.e. in the first pour), by suddenly allowing to fall through the tremie pipe from the funnel. This will help in displacing left out muck/debris in the pile bore (by the impact).

h) Continuous feeding of concrete shall be ensured by deploying at least two transit concrete mixers (if required to be deployed) and mixing done through concrete batching plant (if deployed). Cold joints in the pile shall be avoided.

i) In a pile group, SPT shall be carried out at termination level in the pile, taken up first.

j) Bentonite slurry circulation to be ensured from start of boring to start of concreting. Flushing of bentonite slurry will only ensure maintaining of density of bentonite slurry uniformly and will not allow bentonite jelly to settle at the bottom, whereas air lift technique with bentonite circulation will ensure removal of muck debris from the bottom of pile bore.

k) Properties of drilling mud shall be checked prior to commencement of the piling work and thereafter, minimum once per week or as found necessary by the engineer. One sample consisting of 3 specimens shall be tested for the above.

l) Low strain pile integrity test on all job piles and test piles shall be conducted as specified in the Technical Specification. This test shall be suitably used to identify the piles for routine tests. High Strain dynamic test shall be done as per the technical specification. The frequency of the test shall be as per the BOQ

m) For Working Piles: Minimum one sample consisting of 6 test cubes shall be made for first ten piles. Out of these 3 shall be tested for 7 days cube strength and 3 for 28 days cube strength. Minimum one sample of 6 test cubes for every 25 nos. of piles shall be tested, out of these 3 shall be tested for 7 days cube strength and 3 for 28 days cube strength

PILE LOAD TEST

Pile load testing shall conform to the requirements of IS-2911 (Part IV) and the technical specification. Initial load tests as specified in the contract documents shall be conducted to assess the safe load carrying capacity of pile before start of work. To verify the load carrying capacity of the working piles, routine load test shall be conducted.

Pile load-testing procedure and the test setup / scheme shall be submitted for approval of NTPC. The contractor shall use the test setup having arrangement for anchor piles / rock anchors alone or combination of anchor piles / rock anchors and kentledge for both vertical compression and uplift (tension) Load test (initial) on piles. The cost of reaction system / piles shall deem to be included in the cost of test piles

All the gauges and instruments shall be calibrated before the start of the tests on test piles and working piles and the calibration record shall be verified before start of execution of the test.

2.12.0 WATER SUPPLY, DRAINAGE & SANITATION

Material used for sanitary and plumbing fittings and fixtures shall conform to and be tested as per the requirements of relevant IS Codes specified in NTPC technical specification.

The obstructions in sewer lines shall be checked by inserting a smooth ball, of diameter 13 mm less than the pipe bore at the high end of the sewer or drain. If

absence of any obstructions, such as yarn or mortar projecting through the joints, ball shall roll down the invert of the pipe and emerge at the lower end. The straightness shall be checked by means of a mirror at one end of the line and lamp at the other. If the pipeline is straight, the full circle of the light may be observed. The mirror will also indicate obstruction in the barrel, if the pipeline is not straight.

The service pipes shall be slowly and carefully charged with water, allowing all air to escape avoiding all shock or water hammer. The service pipe shall then be inspected under test / working condition of pressure and flow, when all draw-off taps are closed. The service pipes shall be checked for satisfactory support and protection from damage, corrosion and frost.

2.13.0 ARCHITECTURAL & MISC. WORKS

Material used for sanitary and plumbing fittings and fixtures, floor finishes and allied work shall conform and tested as per the requirements of relevant IS Codes specified in NTPC technical specification.

Fabricated item like metal doors, windows, ventilators, louvers, rolling shutters and grills etc. shall be checked for correctness of locations and smoothness of operation and fixtures. All controls and locking devices shall give fault free performance. Door and window shutters shall operate without jamming. The clearance at head and jamb for door shutters shall not exceed 1.5 mm. For double leaf doors, the gap at the meeting stiles shall not be more than 2.5 mm.

Materials used in glass and glazing shall be procured from source approved by NTPC and shall conform to the requirements of the Technical Specification and IS Codes.

False ceiling panels shall be best quality material in thickness and properties called for in the specification / schedule of items. Material Test Certificate to be submitted before bulk supply.

All bought items covered in the scope of contract shall be procured from sources approved by NTPC and shall conform to the requirements of the technical specifications and referred standards /codes.

2.14.0 PRE CAST CONCRETE WORKS

1. All the materials used in Pre cast Concrete work shall be tested and conform to the requirements of IS codes and NTPC Tech. Specification.
2. Concrete mix for Pre cast members shall conform to IS-456-2000.
3. All relevant QA requirements pertaining to cast insitu concrete shall be applicable.
4. Pre Cast Concrete member shall be checked for dimensions (length, cross sectional dimensions, straightness, squareness, and flatness) and tolerances shall be as per NTPC Technical Specification.

2.15.0 FABRIC EXPANSION COMPENSATOR:

Each layer of fabric Compensator shall be checked for thickness, unit weight, tensile strength & elongation, composite layer of the expansion joint shall be tested for temperature withstand ability test.

Thermal Insulation shall be checked for thickness, density, thermal conductivity test and all other tests as per IS:8183.

Tests and checks on all other items shall be carried out as per relevant codes.

2.16.0 SLIPFORM SHUTTERING

1. The monitoring of the leveling of the yoke and the platform of the slip form shuttering to be done in each shift to avoid tilt during the casting of the chimney shell.

2. Manning of each shift shall be done by at least two experienced operators and a foreman particularly in night shift.

3. Suitable removal/ reduction of overhung / excess yoke beam length shall be affected with the decrease in the diameter of Chimney shell, as per the approved plan.

4. The laser centering method to be deployed for chimney alignment and Monitoring of chimney centre should be done by laser instruments at least two points. Monitoring/Recording of the same shall be done in each shift of 8 hours

5. Shuttering plates to be used for slip form shall be new and the grade of steel shall conform to the specification requirements.

6. The outage of the alignment of chimney centre shall be prevented by creating a counterbalance for alignment purpose to avoid differential loading, arising out of placement of reinforcement bars at one side or unloading of concrete in a hopper at one side of the platform for slip form shuttering.

एनटीपीसी NTPC	PROJECT: North Karanpura STPP (3X660)	LIST AND STATUS OF ITEM REQUIRING QP AND SUB-SUPPLIER APPROVAL				NTPC DOC NO	
	PACKAGE: FLUE GAS DESULPHURISATION SYSTEM PACKAGE					REV. NO.	0
	MAIN SUPPLIER:					DATE	
	CONTRACT NO.:						
SR. NO.	**ITEM**	**QAP / INSP. CAT**	**QAP NO.**	**PROPOSED SUB SUPPLIER**	**PLACE OF MANUFACTURING**	**APPROVAL STATUS**	**REMARKS**
1	CEMENT						
2	CONSTRUCTION CHEMICALS - ADMIXTURES, PLASTISIZERS, RETARDERS, WATER PROOFING COMPOUNDS, GROUTS, RESINS, EPOXY ETC.						
3	COLOUR COATED SHEET(FOR COIL)						
4	PROFILERS FOR DECKING/CLADDING SHEETS						
5	ELECTROFORGED GRATING						
6	PAINT AND PAINTING SYSTEM						
7	GI PIPES						
8	INSULATION WOOL FOR CHIMNEY						
9	NON-METALLIC EXPANSION JOINT						
10	PVC WATER STOP						
11	PLASTIC/ PVC PIPES						
12	FLOOR TILES						
13	FIRE PROOF DOORS						
14	PARTICLE BOARDS, PLYWOOD, MDF						
15	ROOF WATER PROOFING						
16	RCC PIPES						
17	FALSE CEILING - GLASS REINFORCED GYPSUM						
18	BITUMEN ASPHALT						
19	BITUMEN IMPREGNATED FIBER BOARD JOINT						
20	SANITARY ITEMS						
21	CP BRASS TAP AND OTHER SANITARY FITTINGS						
22	POLYTHENE WATER STORAGE TANKS - IS 12701						
23	CHIMNEY ELEVATOR						
24	PTFE BEARING / ELASTOMERIC BEARING						
25	FOUNDATION BOLTS						

LEGENDS:
1. SYSTEM SUPPLIER/SUB-SUPPLIER APPROVAL STATUS CATEGORY (SHALL BE FILLED BY NTPC)
A – For these items proposed vendor is acceptable to NTPC. To be indicated with letter “A” in the list along with the condition of approval, if any

2. QP/INSPN CATEGORY:
CAT-I : For these items the Quality Plans are approved by NTPC and the final acceptance will be on physical inspection witness by NTPC.
CAT-II : For these items the Quality Plans approved by NTPC. However no physical inspection shall be done by NTPC. The final acceptance by NTPC shall be on the basis review of documents as per approved
CAT-III : For these items Main Supplier approves the Quality Plans. The final acceptance by NTPC shall be on the basis certificate of conformance by the main supplier.
UNITS/ WORKS : Place of manufacturing Place of Main Supplier of multi units/works.

NOTE: For the items placed in CAT-III for Civil Works, the review and final acceptance shall be done by NTPC-EIC/ FQA on the basis of certificate of conformance submitted by the main supplier/ main contractor.

Annexure – II

INDICATIVE FIELD QA&QC LABORATORY SET-UP

S.No	Equipment	Nos.
1	Vicat Apparatus with deskpot	2
2	Le Chatelier flask	2
3	Le Chatelier Mould	2
4	Cube Moulds for cement testing	12
5	Vibration Machine	1
6	Length comparator	2
7	Shrinkage Bar mould	2
8	Sieve shaker	1
9	Sieves for sand, coarse & fine aggregate	1 set for each
10	Sieves for coarse aggregate for Road	1 set
11	Proctor testing equipment	2 sets + 18 cores
12	Slump testing equipment	6 sets
13	Oven	2
14	Physical balance	1
15	Rapid moisture meter	2
16	Thermometer	4
17	Burret	2
18	Measuring cylinders	9
19	Measuring flasks	3
20	Compression testing machine	2 sets
21	Cube moulds	30
22	Electronic balance	2 (12 kg capacity), 2 (200 mg capacity)
23	pH balance	As per requirement
24	Radiographic facilities	As per requirement, Party should deploy BARC approved agency for carrying out RT
25	Mechanical weighing machine	1 (100 kg capacity)
26	Ultrasonic testing machine	As per requirement
27	D.P. Test kit	10
28	Vernier 300 mm, 600 mm	2
29	Micrometer (0.25 mm) out side (25.00)	2
30	Radiography film viewer	2
31	Inside Micrometer 25-750 dia	2
32	Digital elcometer for paint thickness	2
33	Baking oven for electrode	3
34	Portable ovens	2
35	Rebar detector to locate the reinforcement before core cutting operation	1
36	Concrete coring machine (55mm, 60mm upto 150 mm dia core bit)	1
37	Rebound hammer	1
38	Ultrasonic pulse velocity tester	May be arranged from specialist laboratory.

Note :

1. The equipments listed above are indicative and required to be mobilised as minimum requirement. additional equipment if any ,required for successful completion of work shall be provided /arranged by the contractor.
2. All test reports/ inspection reports have to be computerized and maintained on LAN with an access to the owner
3. Computers - 2 Nos shall be deployed with Windows operating system and connected to the NTPC server
4. Based on the schedule (L2/L3 Network), Quality control & Quality Assurance work plan shall be finalized by the contractor and the same shall be submitted to the engineer-in-charge for acceptance/approval. The Finalized work plan shall be maintained on the computer to be accessed by the owner for database and day to day monitoring.

Annexure – III

INDICATIVE FIELD QA & QC MANPOWER STRUCTURE

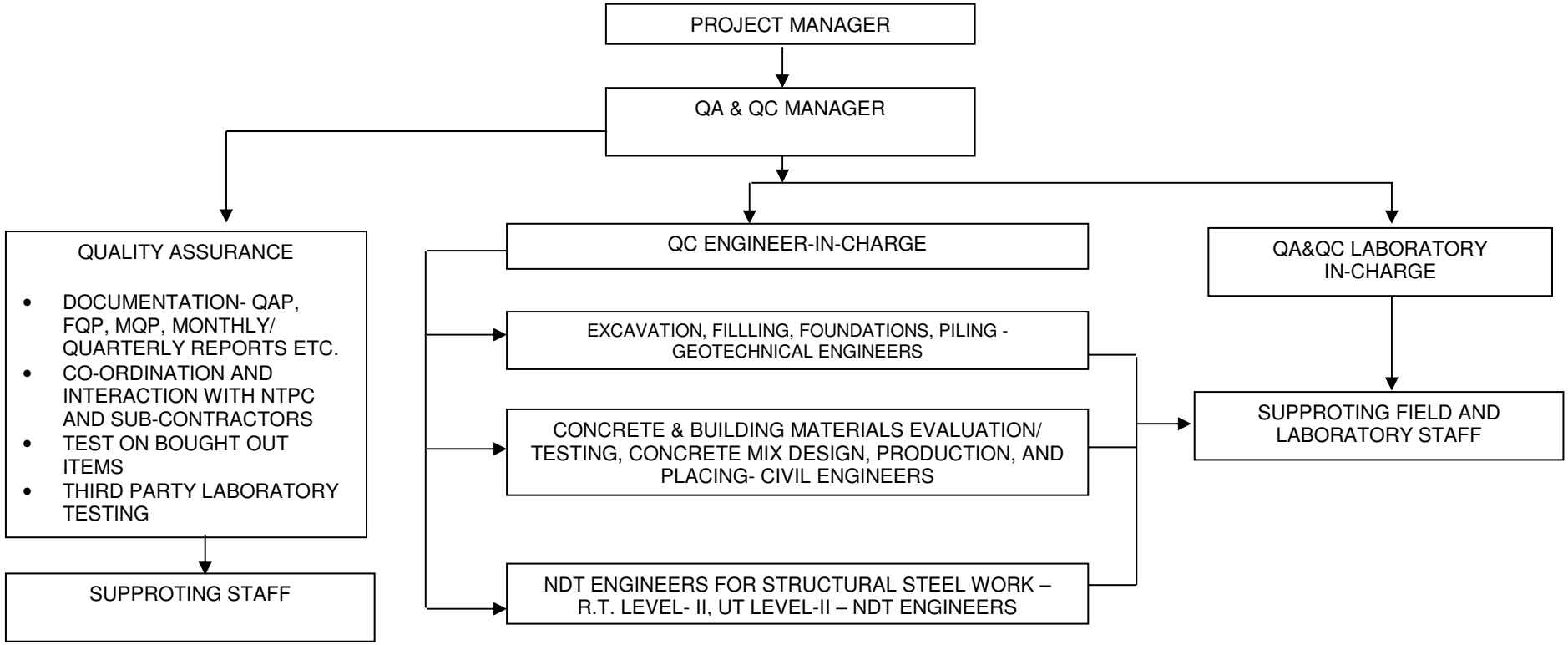

NOTE:

1. The above organization setup is minimum, however their deployment shall be as per the agreed deployment schedule. The contractor shall prepare a manpower deployment schedule in line with the finalized work plan and the same shall be submitted to the engineer-in charge for acceptance/ approval.
2. The contractor shall mobilize the QA& QC manpower in line with the finalized manpower deployment schedule and shall ensure their availability well in advance (15 days approx.) of the beginning of the concerned activity/ work.
3. The contractor shall further mobilize required number of skilled & supporting staff and additional resources, if any to meet the work schedule.

LOGO	SUPPLIERS NAME AND ADDRESS:	INDICATIVE FIELD QUALITY PLAN									ANNEXURE- IV
		ITEM : CIVIL WORK SUB-SYSTEM : Foundations, Excavation & Fill, Concrete, Building, Masonry Etc.		QP NO. : REV. NO .: DATE : PAGE :		1 0	PROJECT: PACKAGE: CONTRACT NO. MAIN CONTRACTOR	North Karanpura STPP (3X660) FLUE GAS DESULPHURISATION SYSTEM PACKAGE			
Sl. No	Activity and operation	Characteristics / instruments		Class# of check	Type of Check	Quantum Of check	Reference Document	Acceptance Norms	Format of Record		Remarks
1	2	3		4	5	6	7	8	9	D*	10
1.00	**GENERAL REQUIREMENTS**										
A	Setting up of Field QA&QC laboratory		As agreed / required	A	Physical	Once prior to start of work	Tech Specs and Const. Drawings		SR	√	Functioning of laboratory equipment in proper working condition to be verified on monthly basis
B	Avialablility of requisite laboratory set up and equipment in good working condition well before commencement of concerned activity		As agreed / required	A	Physical	Once prior to start of work and thereof monthly	Tech Specs and Const. Drawings		SR	√	
C	Submission of QA & QC manpower deployment schedule based on agreed L-2 network .		-	A	Physical	Once prior to start of work	Tech Specs and Const. Drawings			√	
D	Availability of QA& QC manpower based on deployment schedule .		-	A	Physical	Once prior to start of work and thereof monthly	Tech Specs and Const. Drawings		SR	√	
E	Sampling for testing of buliding materials, concrete mix design etc.		As agreed / required	A	Physical	Once per each source prior to start of concern work	Tech Specs and Const. Drawings		SR	√	Test report along with the recommendations from specialist agency to be submitted to NTPC.
F	Submission of schedule of tests to be done monthly / quaterly and maintenace of the same on a computer connected to LAN of NTPC for monitoring		-	A	Physical	Once prior to start of work and thereof monthly	Tech Specs and Const. Drawings		SR	√	
2.00	**EXCAVATION AND FILLING IN FOUNDATION WORKS**										
	Excavations-										
1		Check for the Nature, type of soil/rock before and during excavations	As agreed / required	B	Visual	Random in eah shift	Tech Specs and Const. Drawings		SR		
2		Check for the Initial ground level before start of excavations	As agreed / required	B	Measurement	100%	Tech Specs and Const. Drawings		SR		
3		Check for the final shape and Dimensions of excavations.	As agreed / required	B	Measurement	100%	Tech Specs and Const. Drawings		SR		
4		Check for the Final excavation lelvels	As agreed / required	B	Measuement	100%	Tech Specs and Const. Drawings		SR		
5		Check for the Side slope of final excavation	As agreed / required	B	Measurement	Random in eah shift	Tech Specs and Const. Drawings		SR		
6		Excavation in Hard Rock.									
i		Receipt, Storage, accountability of Explosive	As agreed / required	B	Physical	Random in each week	Indian Explosive Act 1940/all statutory norms, Tech Specs and Const. Drawings		SR	√	NTPC approved specialist blasting agency such as CMRI, NIRM shall be deployed at site for trial blasts, design blasts, blast vibration monitoring etc. Seismographs shall be deployed at site for monitoring of blast operation vibrations.
ii		Execution of Blasting Operation	As agreed / required	B	Physical	Random in eah shift	IS:4081, Tech Specs and Const. Drawings		SR	√	
iii		Submission of Blasting report to EIC	As agreed / required	C	Physical	Each blast	Tech Specs and Const. Drawings			√	
7		Excavation in Hard Rock (Blasting Prohibited)	As agreed / required	B	Physical	100%	As per approved drawing/ scheme, Tech Specs and Const. Drawings		SR	√	
	Fill/ Backfill -										
8	**Suitability of fill material**										
i		Grain size analysis	As required/ agreed	B	Physical	One in every 2000 cum for each type and source of fill materials subject to a min. of 2 samples	IS:2720 (Pt.IV), Tech Specs and Const. Drawings		SR/TR	√	
ii		Liquid & plastic limit	As required/ agreed	B	Physical	One in every 2000 cum for each type and source of fill materials subject to a min. of 2 samples	IS:2720 (Pt.IV) , Tech Specs and Const. Drawings		SR/TR	√	
iii		Shrinkage limit	As required/ agreed	B	Physical	One in every 5000 cum for each type and source of fill materials subject to a min. of 2 samples	IS:2720 (Pt.IV), Tech Specs and Const. Drawings		SR/TR	√	
iv		Free Swell Index	As required/ agreed	B	Physical	One in every 5000 cum for each type and source of fill materials	IS:2720 (Pt.XI), Tech Specs and Const. Drawings		SR/TR	√	
9	**Standard proctor Test**	Optimum moisture content and max. dry density before fill	As required/ agreed	A	Physical	One in every 2000 cum for each type and source of fill materials	IS 2720 (Pt.VII), Tech Specs and Const. Drawings		SR/TR	√	
10	**Moisture content**	Moisture content of fill before compaction	As required/ agreed	A	Physical	One in every 2000 cum for each type and source of fill materials	IS 2720 (Pt.II), Tech Specs and Const. Drawings		SR/TR	√	
11	**Degree Of Compaction Of Fill / Backfill**										
i		Dry density by core cutter method ---- OR---- Dry density in place by sand displacement method	As required/ agreed	A	Physical	i) For foundation fill/ backfill one for every 10 foundations for each compacted layer.	IS 2720 (Pt. XXIX), Tech Specs and Const. Drawings		SR/TR	√	
						ii) For area filling, one every 1000 SQM area for each compacted layer.	IS 2720 (Pt. XXVIII), Tech Specs and Const. Drawings		SR/TR	√	
ii		Relative density (Density Index)	As required/ agreed	A	Physical	----do----- (i) & (ii) above	IS 2720 (Pt. XIV), Tech Specs and Const. Drawings		SR/TR	√	

LOGO	SUPPLIERS NAME AND ADDRESS:	INDICATIVE FIELD QUALITY PLAN									ANNEXURE- IV
		ITEM : CIVIL WORK SUB-SYSTEM : Foundations, Excavation & Fill, Concrete, Building, Masonry Etc.		QP NO. : REV. NO .: DATE : PAGE :		1 0	PROJECT: PACKAGE: CONTRACT NO. MAIN CONTRACTOR	North Karanpura STPP (3X660) FLUE GAS DESULPHURISATION SYSTEM PACKAGE			
Sl. No	Activity and operation	Characteristics / instruments		Class# of check	Type of Check	Quantum Of check	Reference Document	Acceptance Norms	Format of Record		Remarks
1	2	3		4	5	6	7	8	9	D*	10
iii		Dry Density by proctor needle penetration	As required/ agreed	B	Physical	Random checks to be carried out for each compacted layer	Tech Specs and Const. Drawings		SR/TR	√	
3.00	**CAST-IN-SITU CONCRETE**										
	MATERIALS										
1	**Cement**										
i		Initial & Final Setting Time	as per IS:4031	A	Physical	Each Lot	IS:4031	As per relevant IS Codes	SR/LB/ Test Report	√	Each consignment of cement shall be duly correlated with manufactureres TC, If cement is stored more than 90 days in godown of contractor same shall be retested for comp. Strength & setting time.
ii		Compressive strength @ 3, 7 & 28 days	as per IS:4031	A	Physical	Each Lot	IS:4031	As per relevant IS Codes	SR/LB/ Test Report	√	
2	**Coarse Aggregate**										
i		Moisture content	.	B	Physical	Once for each stack of 100 Cum. or part there of Except during monsoon when this has to be done every day before start of concreting	IS:2386 Part-III, IS : 456, IS : 383/Tech Spec, Tech Specs and Const. Drawings		SR/LB		Accordingly water content of the concrete will be adjusted
ii		Specific gravity, bulk density, voids, water absorption,	As required/ agreed	B	Physical	Once for each source & for every change of source	IS:2386 Part-III, IS : 456, IS : 383/Tech Spec, Tech Specs and Const. Drawings		SR/TR		These tests will be carried out white establishing design mix and the results to be intimated to NTPC.
iii		Particle, size & Shape-(Sieve analysis, determination of material finer than 75 micron, flakiness index, elongation index, angularity number)	As required/ agreed	B	Physical	One per 100 cum., or part thereof/change of source whichever is earlier	IS:2386 Part-I, IS : 456, IS : 383/Tech Spec, Tech Specs and Const. Drawings		SR/LB		-do-
iv		Deleterious materials & organic impurities (determination of clay lumps, fine silt, fine dust , light weight pieces , soft particle & estimation of organic impurities.)	As required/ agreed	B	Physical	Once per source/ on every change of source	IS:2386 Part-II, IS : 456, IS : 383/Tech Spec, Tech Specs and Const. Drawings		SR/TR		Experts opinion regarding suitability of the aggregates shall be obtained from the specialist agency such as NCB BallbhGarh etc. finalised during preaward. Results will be reported nearest to 0.1% of clay lumps.
v		Soundness	As required/ agreed	B	Physical	Once per source/ on every change of source	IS: 2386 Part-V, IS:383 , Tech Specs and Const. Drawings		SR/TR		Experts opinion regarding suitability of the aggregates shall be obtained from the specialist agency such as NCB BallbhGarh etc. finalised during preaward.
vi		Alkali aggregate reactivity	As required/ agreed	A	Physical	Once per source/ on every change of source	ASTM C 1260 , Tech Specs and Const. Drawings		SR/TR	√	the quantity of dissolved silica , and reduction in alkalinity to be reported and hence the aggregate type (deleterious /innocuous)result should be supported by petrographic examination
vii		Petrographic examination	As required/ agreed	A	Physical	Once per source/ on every change of source	IS: 2386 Part-VIII, IS:383 , Tech Specs and Const. Drawings		SR/TR	√	Reporting of petrographic examination shall be done as illustrated in IS 2386 (part-VIII)-1963. petrographic report shall be supported by the analysis and recommendation by a specialist instute.
viii		Crushing value abrasion value and impact value	As required/ agreed	A	Physical	Once per source/ on every change of source	IS:383, IS-2386 Part IV/, Tech Specs and Const. Drawings		SR/TR		-do-
3	**Fine Aggregate**										
i		Moisture content	As agreed / required	B	Physical	To be done every day before start of work	IS: 2386 Part-III IS:383 , Tech Specs and Const. Drawings		SR/TR		Weight of sand and weight of water shall be adjusted as per moisture content.
ii		Silt, Clay content and organic impurities	As agreed / required	B	Physical	Once per source& for on every change of source	IS: 2386 Part-II, IS:383 , Tech Specs and Const. Drawings		SR/TR		Acceptance limit as per relevant IS code
iii		All other tests similar to coarse aggregates as mentioned above.	As agreed / required	B	As above	Refer S.No. 2.01.02	IS-2386, IS-383, Tech Specs and Const. Drawings		SR/TR		
4	**Water**										
i		Test for sulphates and chlorides	As required/ agreed	B	Testing	Once per each source thereof yearly.	IS:3025 part 22 and 23 (for test procedure), IS:456(for acceptance criteria) , Tech Specs		SR/TR		
ii		Tests for ascertaining limit of solids	As required/ agreed	B	Physical	Once per each source thereof yearly.	IS:3025 part 18 (organic),IS:456 , Tech Specs and Const. Drawings		SR/TR		
iii		Tests for pH Value	As required/ agreed	B	Testing	Once per each source thereof yearly.	IS:3025, IS:456, Tech Specs and Const. Drawings		SR/TR		
iv	Check for initial set time for used water and distilled water	vicat appratus		A	Physical	See Remarks	See Remarks, Tech Specs and Const. Drawings		See Remarks	√	Initial set time with used water should not be less than that with distilled water. This check is to be carried out only if the results of the tests mentioned at sl. no. 3.00, .4 i),ii)& iii) mentioned above

LOGO	SUPPLIERS NAME AND ADDRESS:	INDICATIVE FIELD QUALITY PLAN						ANNEXURE- IV			
		ITEM : CIVIL WORK SUB-SYSTEM : Foundations, Excavation & Fill, Concrete, Building, Masonry Etc.		QP NO. : REV. NO .: DATE : PAGE :		1 0	PROJECT: PACKAGE: CONTRACT NO. MAIN CONTRACTOR	North Karanpura STPP (3X660) FLUE GAS DESULPHURISATION SYSTEM PACKAGE			
Sl. No	Activity and operation	Characteristics / instruments		Class# of check	Type of Check	Quantum Of check	Reference Document	Acceptance Norms	Format of Record		Remarks
1	2	3		4	5	6	7	8	9	D*	10
v	Check for Concrete compressive strength with used water and distilled water	standard sand and compression testing machine	As agreed / required	A	Physical	See Remarks	See Remarks, Tech Specs and Const. Drawings		See Remarks	√	This check is to be carried out only if the results of the tests mentioned at sl. no. 3.00, .4 i),ii)& iii) mentioned above
5	CONCRETE PRODUCTION										
i		Check for the proportaions of materials for nominal mix concrete as per Table-9 of IS 456	As agreed / required	B	Physical	Random in each shift	IS:456, Tech Specs and Const. Drawings		SR/TR		
ii		Trial mix (Cubes compressive strength) as per Mix Design	As agreed / required	A	Physical	Min. 4 Trial Mixes with admixtures and Without admixtures With fly ash.	IS: 516 & IS:456, IS:10262, Tech Specs and Const. Drawings		SR/TR	√	For trial mix min. of 6 cubes for each mix, 3 specimen shall be tested at 7 days remaining 3 shall be for 28 days comp. Strength. Mix design shall carried out at agency finalised during pre award)
iii		Crushing strength (works Tests cubes)	As agreed / required	A	Physical	One set of 6 cubes per 50 M3 or part thereof for each grade of concrete per shift whichever is earlier.	IS:516, IS:456, Tech Specs and Const. Drawings		SR/TR	√	Min. of 6 cubes for each mix, 3 specimen shall be tested at 7 days remaining 3 shall be for 28 days comp. Strength.
iv		Workability - slump test	As required/ agreed	B	Physical	One sample every 2 hrs. from every mixing plant	IS:456, Tech Specs and Const. Drawings		SR/TR		Slump test for medium and high workability, Compaction factor test for medium and low workability, V.B. test for low to Very low workability
v		Cement content	As agreed / required	B	Physical	At random at the time of batching.	IS:1199 , Tech Specs and Const. Drawings		SR/TR		
vi		Admixtures for Concrete from approved sources	As agreed / required	A	Review of MTC	Random in each shift	IS:456 , Tech Specs and Const. Drawings		SR/TR	√	Admixture of appd. Brand and tested quality shall be used.
vii		Water Tightness Test for Water Retaining Structures	As agreed / required	B	Physical	100%	IS:3370 (Tanks and Revision) , Tech Specs and Const. Drawings		SR	√	
viii		Dimensions and visual exa-mination of finished structure	As agreed / required	B	Physical/ visual	100%	As per Tech. Specification./Appd. Drg./IS-456		SR		
6	CONCRETE CONVEYING, PLACING& COMPACTION										
i	Mixing of concrete	mixing of concrete shall be done in a approved mixer such as to produce a homogenous mix	As required/ agreed			To be calibrated at the time of starting and subsequently once in three months, and shall confirm to IS:4925	Review of calibration chart/ Certificate, IS 457, Tech Specs and Const. Drawings				time of mixing will be as given in IS 457
ii		Calibration of Batching Plant	As required/ agreed	A	Physical	To be calibrated at the time of starting and subsequently once in three months, and shall confirm to IS:4925	Review of calibration chart/ Certificate, Tech Specs and Const. Drawings		SR/TR	√	Cement consumption at batching plant shall also be obtained through comp. Output.Provision of online printer is manadatory
iii		Handling and Transportation of concrete	As required/ agreed	B	Physical	Random in each shift	IS:456, Tech Specs and Const. Drawings		SR		Free fall or drop shall be limited to 150 cm unless permitted concrete should be placed within 30 min of its removal from mixure . Construction methodology to be approved one week prior to start of work.
iv		Placement of concrete	As required/ agreed	B	Physical	Random in each shift	IS:456, Tech Specs and Const. Drawings		SR		No concrete shall be placed until the place of deposit has been throughly inspected and approved, the concrete shall be deposited in such a manner to maintain, until completion of unit, a plastic horizontal surface throughout
v		Check for compaction and Curing	As required/ agreed	B	Physical	Random in each shift	Check for period of curing as per IS 456 , Tech Specs and Const. Drawings		SR		Exposed concrete surface shall be protected against heating and drying for atleast 72 hrs after placement, curing compound may be used
vi		Cleanliness, provision of chute and arrangement for transportation & placement of concrete.	As agreed / required	C	Visual	100%	IS:456, Tech Specs and Const. Drawings		SR		
x		check for segregation	As agreed / required	C	Visual	100%	IS:456, Tech Specs and Const. Drawings				
7	TEST/CHECK ON RCC STRUCTURE IN HARDENDED CONDITIONS										
i		Core Test	As agreed / required	A	Physical	As required by NTPC Engineer.	As per IS:456, IS 516, Tech Specs and Const. Drawings		SR/LB/ Test Report	√	Acceptable if average equivalent cube strength of the cores is equal to at least 85% of the cube strength of the grade of concrete specified for the corresponding age and no indivisual conc has result less than 75%`
ii		Dimensional check on finished structures & Dimensional tolerances	As agreed / required	B	Measurement	Approved Drawing	As per IS:456, Tech Specs and Const. Drawings		SR/LB		
iii		Rebound Hammer test	As agreed / required	A	physical	As required by the NTPC engineer	Tech Specs and Const. Drawings		SR/LB	√	
8	REINFORCEMENT STEEL										
i		Physical and Chemical Properties for each lot as per relevant IS codes	As required/ agreed	A	Review of MTC	Each batch of delivery	IS : 1786, IS:432, IS:1566, Tech Specs and Const. Drawings		MTC	√	Applicable if steel is procured by Contractor
ii		Cutting tolerance	As agreed / required	B	Measurement	Random in each shift	IS : 1852, IS: 432, IS:1786, Tech Specs and Const. Drawings		SR/LB		Tolerance as per specifications

LOGO	SUPPLIERS NAME AND ADDRESS:	INDICATIVE FIELD QUALITY PLAN									ANNEXURE- IV
		ITEM : CIVIL WORK SUB-SYSTEM : Foundations, Excavation & Fill, Concrete, Building, Masonry Etc.		QP NO. : REV. NO .: DATE : PAGE :		1 0	PROJECT: PACKAGE: CONTRACT NO. MAIN CONTRACTOR	North Karanpura STPP (3X660) FLUE GAS DESULPHURISATION SYSTEM PACKAGE			
Sl. No	Activity and operation	Characteristics / instruments		Class# of check	Type of Check	Quantum Of check	Reference Document	Acceptance Norms	Format of Record		Remarks
1	2	3		4	5	6	7	8	9	D*	10
iii		Freedom form cracks surface flaws, Lamination.	As agreed / required	B	Visual	Random in each shift	IS: 1852, IS:432, IS:1786, Tech Specs and Const. Drawings		SR/LB		To be checked at site. Steel collected from source should be free from excessive rust. To be stored as per Technical Specs.
9	PLACEMENT OF REINFORCEMENT STEEL										
i		Check for bar bending schedule with necessary laps. Spacers & Chairs	As agreed / required	B	Visual & Measurement	Random in each shift	Approved Drawings, Tech Specs and Const. Drawings		SR		
ii		Check for cover, spacing of bars	As agreed / required	B	Visual & Measurement	Random in each shift	Approved Drawings, Tech Specs and Const. Drawings		SR		
iii		Check for bending of bars	As agreed / required	B	Visual & Measurement	Random in each shift	Approved Drawings, Tech Specs and Const. Drawings		SR		
iv		Check for spacers and chairs after the reinforcement cage is put inside the formwork	As agreed / required	B	Visual & Measurement	Random in each shift	Approved Drawings, Tech Specs and Const. Drawings		SR		
v		Acceptance of placement od reinforcement before start of concreting	As agreed / required	B	Visual & Measurement	beofre start of each concreting	IS : 456/ Drawings & approved bar bending, Tech Specs and Const. Drawings schedule		SR		
10	STAGING AND FORMS										
i		Materials and accessories	As agreed / required	B	Visual	Once before start of work	As per relevant IS, Tech Specs and Const. Drawings		SR		Proper care should be taken in order to combat corrosion. Proper care should be taken while cleaning, moving and stacking the scaffolds
ii		Soundness of staging, shuttering and scaffolding	As agreed / required	B	Visual	Once before start of work	As per manufacturer's spec.and as per 3696,4014, 4990, Tech Specs and Const.		SR		
iii		Acceptance of formwork before start concreting		B	Physical / visual	beofre start of each concreting	As per provisions and tolerances, Tech Specs		SR		
11	EMBEDDED PART(INCLUDING LAYING OF RAILS & ANCHOR FASTENERS)										
i		Position and levels of embedded parts	As agreed / required	B	Physical/ measurement	100%	As per drawing, Tech Specs and Const. Drawings		SR		Exposed surfsce of the embeded parts other than holding down bolts are to be painted with primer ,chlorinated , rubber baed zinc phosphate
ii		Position depth and size of bolt hole	As agreed / required	B	Physical/ measurement	Random in each shift	As per drawing, Tech Specs and Const. Drawings		SR		
iii		Location verticality of pipe sleeve/opening of bolt hold	As agreed / required	B	Physical/ measurement	Random in each shift	As per drawing, Tech Specs and Const. Drawings		SR		
iv		Laying of rails under supervision of NTPCs specilised agency.	As agreed / required	B	Physical/ measurement	Random in each shift	As per drawing, Tech Specs and Const. Drawings		SR		
v		Welding / tieing of embeddment to reinforce-ment	As agreed / required	B	Physical/ measurement	Random in each shift	As per drawing, Tech Specs and Const. Drawings		SR		
12	PRE-CAST CONCRETE										
i		Crushing strength	As required/ agreed	A	Physical	one sample of six cubes per 50 cum or part thereof	IS:516&IS; 456, Tech Specs and Const. Drawings		SR/LB	√	a minimum of three specimen shall be tested for 28 days comp. strength
ii		Workmanship free from visual defects	As required/ agreed	B	Physical	100%	Tech Specs and Const. Drawings		SR		The precast units shall be free from defects like honeycombing, reinforcement exposure and should have good finish. All relevant tests like workability, cube test shall be carried out as per IS 456-2000 Same as applicable to cast in situ concrete.
iii		Dimension of finish structure	As required/ agreed	B	Measurement	100%	As per IS:456, Tech Specs and Const. Drawings		SR		If the material already tested of the cast-in-situ concrete and part of the same is used for precast concrete, further testing is not required, otherwise testing is required for every 50 Cum. Of Concrete.
iv		Workability	slump test apparatus	B	Physical	one sample every two hrs from mixing plant	IS:1199 &IS:456, Tech Specs and Const. Drawings		SR/LB		According to the mix design
v		Water cement ratio	As agreed / required	B	Physical	At random at the time of batching	IS:1199 , Tech Specs and Const. Drawings		SR/LB		According to the mix design
vi		Cement content	As agreed / required	B	Physical	At random at the time of batching	IS:1199 /tech spec, Tech Specs and Const. Drawings		SR		According to the mix design
vii		Load Test	As agreed / required	A	Physical	5% or as desired by EIC	IS:456/ As decided by NTPC Site Engr. Incharge., Tech Specs and Const. Drawings		SR	√	These tests shall also be carried out, in case of doubt regarding grade of concrete and poor quality.
13	JOINTS IN CONCRETE										
i		Check for the joint material - bitumen impregnated fibre board, PVC water stops, Sealing compound, Expanded polystyrene board, Hydrophillic strip, Acrylic polymer etc.	As per manufacturer Standards	A	Review of MTC	Each batch of delivery	Tech Specs and Const. Drawings, IS 1838, IS 1834, IS12200		MTC	√	
ii		Acceptance of installation of materials for Joints in concrete	As agreed / required	B	Acceptance	Each installation randomly	As per technical specifications and construction drawings				
14	DAMP PROOF COURSE										
i		Check for the material - Hot bitumen and water proffing materials etc	As agreed / required	A	Review of MTC	Each batch of delivery at site	Tech Specs and Const. Drawings, IS 702		SR	√	
ii		Acceptance of damp proof course	As agreed / required	B	Acceptance	100%	As per technical specifications and construction drawings		SR		

LOGO	SUPPLIERS NAME AND ADDRESS:	INDICATIVE FIELD QUALITY PLAN									ANNEXURE- IV
		ITEM : CIVIL WORK SUB-SYSTEM : Foundations, Excavation & Fill, Concrete, Building, Masonry Etc.		QP NO. : REV. NO .: DATE : PAGE :		1 0	PROJECT: PACKAGE: CONTRACT NO. MAIN CONTRACTOR	North Karanpura STPP (3X660) FLUE GAS DESULPHURISATION SYSTEM PACKAGE			
Sl. No	Activity and operation	Characteristics / instruments		Class# of check	Type of Check	Quantum Of check	Reference Document	Acceptance Norms	Format of Record		Remarks
1	2	3		4	5	6	7	8	9	D*	10
15	GROUTING										
i		Check for the material	As agreed / required	A	Review of MTC	Each batch of delivery	As per technical specifications and construction drawings		SR	√	Check for chemical, epoxy, resin grouts etc
ii		Check for the type of mix - fluid mix, plastic mix, stiff mix etc.	As agreed / required	B	Physical	Prior to start of work	As per technical specifications and construction drawings				
iii		Check for the mixing, placement, application and grout pressure	As agreed / required	B	Physical	Random in each shift	As per technical specifications and construction drawings		SR		
iv		Check for the compressive strength	As agreed / required	A	Physical	Each batch of delivery	As per technical specifications and construction drawings		SR	√	
v		Acceptance of the grouts	As agreed / required	B	Physical	Each grout section	As per technical specifications and construction drawings		SR		
16	SLIPFORM SHUTTERING										
i		Submission of Slipform Work system to be used	-	B	Submission	Before Comencement of work	As per specifications		SR		
ii		Check for the Slipform shutters	As required	B	Physical	Before Comencement of work	As per specifications		SR		Check for water level system, Controls, Walkways etc.
iii		Details Positions and arrangement of Jack rods	-	B	Approval	Before Comencement of work	As per specifications		SR		Submitted to Engineer for approval
iv		Details of Proposed arrangement for continuous readings	-	B	Approval	Before Comencement of work	As per specifications		SR		Submitted to Engineer for approval
v		Check for All type of openings, Chases, Fixing of Blocks and similar built-up features	As required	B	Physical	100% during execution	Construction Drawings and specifications		SR		No any type of openings ,chases , blocks other than shown in the construction drawings or approved by Engineer shall be executed in the concrete.
vi		Details of proposed method for concrete curing and protection	-	B	Approval	Before Comencement of work	Construction Drawings and specifications		SR		Submitted to Engineer for approval
vii		Check of Concrete Curing and Protection	As required	B	Physical	At Random	Construction Drawings and specifications		SR		Concrete shall not remain uncured for period longer than 12 hours
viii		Check for Sliding Operation	As required	B	Physical	Each Sliding	As per specifications		SR		Rate of Sliding, Delays in sliding, Discontunity or stop strat sliding to be checked
		Monitoring of Sliding Portion									
ix		Progress Height	As required	B	Physical	Six hourly intervals	As per specifications		SR		To be recorded in tabular form and on graphs immediately after each monitoring
x		Centre line in relation to the centers at the base	As required	A	Physical	Six hourly intervals	As per specifications		SR	✓	To be recorded in tabular form and on graphs immediately after each monitoring
xi		Internal wall faces in relation to the concrete at the base	As required	B	Physical	Six hourly intervals	As per specifications		SR		To be recorded in tabular form and on graphs immediately after each monitoring
xii		Wall thickness	As required	B	Physical	Six hourly intervals	As per specifications		SR	✓	To be recorded in tabular form and on graphs immediately after each monitoring
xiii		Twist	As required	B	Physical	Six hourly intervals	As per specifications		SR	✓	To be recorded in tabular form and on graphs immediately after each monitoring
xiv		Verticality of the structure	Optical Theodolight	B	Physical	Every day in morning	As per specifications		SR		To be recorded in tabular form and on graphs immediately after each monitoring
xv		Check for Tolerances for chimney construction	As required	B	Physical	For every day monitoring	As per specifications		SR		
4.00	BRICK MASONARY										
1	Test on Bricks										
i		Check for Dimensions , shape	As required/ agreed	A	Measurement/ Physical Test	As per relevant IS Code/ One Sample for 30,000 Nos. or part thereof	IS: 1077, Tech Specs and Const. Drawings		Inspection Report	√	Efflorescence shall be checked at each source.
ii		compressive strength, water absorption, warpage efflorescence.	As required/ agreed	B	Measurement/ Physical Test	As per relevant IS Code/ One Sample for 30,000 Nos. or part thereof	IS: 1077, IS:3495 part I (Compressive Strength) Part II (Water Absorbtion) Part III(Efflorescence) Part IV (War page), Tech Specs			√	Preconditioning of brick shall be done as per IS. For comperssive strength, warpage and water absorbtion
2	Test on Mortar	Compressive strength, consistency and water retentivity for each portion of walls, plasters and ceilings.	As required/ agreed	B	Test	At random	IS 2250-1981, Tech Specs and Const. Drawings		LB		Cement used in mortar shall confirm to either IS 269: 1976 or IS 455- 1976 sand shall confirm to IS 2116 -1980
3	Masonry construction	Acceptance of Workmanship, verticality and alignment	As agreed / required	B	Visual/ Physical	100%	IS 2212, IS 1905 , Tech Specs and Const. Drawings		SR/LB		
5.00	FINISHING AND ALLIED WORKS								.		
1	MATERIALS- FINE SAND, SAND FOR PLASTERING										
i		Deleterious Material	As agreed / required	B	Physical	Once per source	IS : 2386 (Part-I &II) & IS :2116, Tech Specs and Const. Drawings		SR		
ii		Grading	As agreed / required	B	Physical	50 Cum./or part thereof	IS:3150,1542& Apprd. drgs, Tech Specs and Const. Drawings		SR		Table –I of IS:2116

LOGO	SUPPLIERS NAME AND ADDRESS:	INDICATIVE FIELD QUALITY PLAN									ANNEXURE- IV
		ITEM : CIVIL WORK SUB-SYSTEM : Foundations, Excavation & Fill, Concrete, Building, Masonry Etc.		QP NO. : REV. NO .: DATE : PAGE :		1 0	PROJECT: PACKAGE: CONTRACT NO. MAIN CONTRACTOR	North Karanpura STPP (3X660) FLUE GAS DESULPHURISATION SYSTEM PACKAGE			
Sl. No	Activity and operation	Characteristics / instruments		Class# of check	Type of Check	Quantum Of check	Reference Document	Acceptance Norms	Format of Record	D*	Remarks
1	2	3		4	5	6	7	8	9		10
iii		Galvanized hexagonal wire netting for lath plastering	As agreed / required	B	Review of MTC	Each batch of delivery	, Tech Specs and Const. Drawings		SR		
iv		Check for the thickness and finishing of plaster	As agreed / required	B	Visual/ Measurement	Random in each shift	As per IS 1661 , Tech Specs and Const. Drawings		SR/LB		
2	PLASTERING										
i		Check for defects and the remedial measure for bond filler , blistering , cracking and crazing , efflorescence and irregularity of surface texture	As agreed / required	B	Visual/ Physical	Random in each shift	Tech Specs and Const. Drawings, IS: 1661		SR		
ii		Truness of plastering system	As agreed / required	B	Visual/ Physical	Random in each shift	Tech Specs and Const. Drawings		SR		finished plaster surface shall not show any deviation more than 4 mm when checked with straight edge of 2 m length
iii		Acceptance of Grooves and finishing	As agreed / required	B	Acceptance	100%	Tech Specs and Const. Drawings		SR		
3	STONE GRIT PLASTER/ GRANULAR TEXTURED COAT FINISH										
i		Check for Preparation of surface	As agreed / required	B	Physical	Random in each shift	Tech Specs and Const. Drawings		SR		
ii		Check for material - Size of chips	As agreed / required	B	Physical	Random in each shift	Tech Specs and Const. Drawings		SR		
iii		Acceptance of Grooves and finishing	As agreed / required	B	Acceptance	100%	Tech Specs and Const. Drawings		SR		
4	WATER PROOFING SYSTEM										
i		Check for the material	As agreed / required	A	Physical and Review of MTC	Each lot of delivery	Tech Specs and Const. Drawings,		SR/ MTC	√	
ii		Acceptance of water proofing system - Application, fixing, laying	As agreed / required	B	Physical	100%	Tech Specs and Const. Drawings		SR		Water pounding test shall be done
5	FALSE CEILING										
i)		Check for the Materials - Glass Reinforced Gypsum (GRG), Pre-painted coil coated steel false ceiling system etc.	As agreed / required	A	Physical and MTC Review	Each batch of delivery	As per relevant IS and Tech. Specs / Manufacturer's TC		-do-	√	
ii)		Acceptance of installation	As agreed / required	B	Physical / measurements	Each installation	-do-		-do-		All supports , hangers , accessories shall be as per Tech. Specifications/ approved manufacturer's recommendations
6.00	PAINTING SYSTEM - All surfaces										
1	Check for the Materials and accessories	White wash, Distemper and all types of Primer and Paints - Check for Shade, type from brand and manufacturer as approved by NTPC EIC	As agreed / required	A	Review of MTC	Each batch of delivery	Tech Specs and Const. Drawings		SR/MTC	√	Mfr.'s T.C. shall be correlated with the consignment received.
2	Check for Surface prepration		As agreed / required	B	Physical /visual	Random in each shift	Tech Specs and Const. Drawings		SR		
3	Check for DFT of painted surfaces		As agreed / required	B	Physical	Each surface at random	Tech Specs and Const. Drawings		SR		
4	Acceptance of painted surfaces		As agreed / required	B	Physical	Each surface at random	Tech Specs and Const. Drawings		SR		
6.10	CHIMNEY PAINTING										
i		Requirements for Steel Surfaces	As Required	B	Physical	Randomly	Tech Specs and Const. Drawings		SR		No of Coats applied and DFT/WFT to be checked as per specified
ii		Requirements for Cast Iron Surfaces	As Required	B	Physical	Randomly	Tech Specs and Const. Drawings		SR		No of Coats applied and DFT/WFT to be checked as per specified
iii		Requirements for Concrete Surfaces	As Required	B	Physical	Randomly	Tech Specs and Const. Drawings		SR		No of Coats applied and DFT/WFT to be checked as per specified
iv		Material Requirements	As Required	B	Physical	Randomly	Tech Specs and Const. Drawings		SR		Requirement of DFT to be checked as per Specifications. Procurement to be done from approved/acceptable manufacturer/source
v		Preparation of Surfaces	As Required	B	Physical	Randomly	Tech Specs and Const.		SR		
vi		Application of Paint	As Required	B	Physical	Randomly	Tech Specs and Const. Drawings		SR		AS per recommendations by Manufacturer along with Relevant IS Codes and Specification requirements
7.00	DOORS , WINDOWS VENTILATORS & GRILL										

LOGO	SUPPLIERS NAME AND ADDRESS:	INDICATIVE FIELD QUALITY PLAN						ANNEXURE- IV		
		ITEM : CIVIL WORK SUB-SYSTEM : Foundations, Excavation & Fill, Concrete, Building, Masonry Etc.		QP NO. : REV. NO .: DATE : PAGE :		1 0	PROJECT: PACKAGE: CONTRACT NO. MAIN CONTRACTOR	North Karanpura STPP (3X660) FLUE GAS DESULPHURISATION SYSTEM PACKAGE		
Sl. No	Activity and operation	Characteristics / instruments		Class# of check	Type of Check	Quantum Of check	Reference Document	Acceptance Norms	Format of Record	Remarks
1	2	3		4	5	6	7	8	9 D*	10
1	**Check for the material/ items for all type of timber, flush doors, Particle doors, wire guage, Aluminium doors, Fire proof doors, windows fittings, Anodized aluminium works, Mortice locks, Automatic operating system etc received at site**	Review of MTC / make or/and Physical checks, tests report (if MTC is not available)	As agreed / required	A	Review of MTC/ Physical	for each batch of delivery	Tech Specs and Const. Drawings		SR √	
2	**Wood work in frames**	Wood work in frames - Check for dimensions, surface finish and rebating etc.	As agreed / required	B	Physical	Random for each installation	Tech Specs and Const. Drawings		SR	
3	**Wardrobe shutter and show cases**									
i		Check for material as per IS 3087 and 3097 - from NTPC approved source	As agreed / required	B	Physical	one sample for each section for each lot of delivery	Tech Specs and Const. Drawings, IS 3087 and 3097		SR	
ii		Acceptance of fixing after completion	As agreed / required	B	Acceptance	100%	Tech Specs and Const. Drawings, IS 3087 and 3098		SR	
4	**Pelmets**									
i		Check for material as per IS 3087/ 3097 - from NTPC approved source	As agreed / required	B	Physical	one sample for each section for each lot of delivery	Tech Specs and Const. Drawings, IS 3087/ 3097		SR	
ii		Acceptance of fixing after completion	As agreed / required	B	Acceptance	100%	Tech Specs and Const. Drawings, IS 3087/ 3098		SR	
5	**MS Grills**									
i		Check for the material for section and weight from NTPC approved source	As agreed / required	A	Physical	one sample for each section for each lot of delivery	Tech Specs and Const. Drawings		SR √	
ii		Check for fabrication done at approved workshop	As agreed / required	B	Physical	Random	Tech Specs and Const. Drawings		SR	
		Acceptance of fixing of MS Grills	As agreed / required	B	Acceptance	Random	Tech Specs and Const. Drawings		SR	
6	**Fitting and fixtures - MS sliding door bolts, tower bolts, pull bolt lock, MS handles, Safety Chains, brass locks, brass latch, hydraulic floor springs & door closers, etc**	Check for fitting items as per relavent IS codes, tech specifications and BOQ- from NTPC approved source	As agreed / required	B	Physical and acceptance	Five samples for each item for each lot of delivery	Tech Specs and Const. Drawings		SR	
7	**Fitting and fixtures - Aluminium sliding door bolts, tower bolts, pull bolt locks, handles, door stoppers etc.**	Check for fitting items as per relavent IS codes, tech specifications and BOQ- from NTPC approved source	As agreed / required	B	Physical and acceptance	Five samples for each item for each lot of delivery	Tech Specs and Const. Drawings		SR	
8	**Fire proof doors**									
i		a) Check for the Fire Proof Doors	As required/ agreed	A	Review of MTC	Each lot	As per Technical Specifications and approved drawings, IS 3614 Part (I &II), TAC		MTC √	
ii		b) Check for DFT and Fire Retardency of Paint	As required/ agreed	B	Physical	Each Door	As per Technical Specifications and approved drawings, IS 3614 Part (I &II)		SR/LB	
9	**Acceptance of all type fittings after fixing**	Acceptance of fittings after completion	As agreed / required	B	Physical and acceptance	Random for each type of fitting	Tech Specs and Const. Drawings		SR	
8.00	**GENERAL STEEL WORK**									
1	**Check for Material**	Review of MTC/ make / Physical checks, tests (if MTC is not available)	As agreed / required	A	Review of MTC for each delivery	For each batch of delivery	Tech Specs and Const. Drawings		SR √	
2	**Rolling shutters**									
i		Check for surface finish and thickness of plate of rolling shutters of approved make and DFT	As agreed / required	B	Physical	Random for each batch of delivery	Tech Specs and Const. Drawings		SR	
ii		Acceptance of rolling shutters after fixing	As agreed / required	B	Physical and acceptance	Random	Tech Specs and Const. Drawings		SR	
3	**Steel Glazed doors and T-iron frames sections**									
i		Check for shape, tolerances, thickness, welding and finishing of sections (Check MTC whereever applicable)	As agreed / required	A	Review of MTC for each delivery	Random for each delivery	Tech Specs and Const. Drawings		SR √	
ii		Acceptance of Steel Glazed doors and T-iron frames sections after fixing	As agreed / required	B	Physical and acceptance	Random for each installation	Tech Specs and Const. Drawings		SR	
4	**Pressed steel pressed frames/ doors**									
i		Check for shape, tolerances, thickness, welding and finishing (Check MTC whereever applicable)	As agreed / required	A	Review of MTC for each delivery	Random for each delivery	Tech Specs and Const. Drawings, IS4351, IS2202		SR √	
ii		Acceptance of Pressed steel pressed doors after fixing	As agreed / required	B	Physical and acceptance	Random for each installation	Tech Specs and Const. Drawings		SR	
5	**Fencing and Gates**									

LOGO	SUPPLIERS NAME AND ADDRESS:	INDICATIVE FIELD QUALITY PLAN						ANNEXURE- IV			
		ITEM : CIVIL WORK SUB-SYSTEM : Foundations, Excavation & Fill, Concrete, Building, Masonry Etc.		QP NO. : REV. NO .: DATE : PAGE :		1 0	PROJECT: PACKAGE: CONTRACT NO. MAIN CONTRACTOR	North Karanpura STPP (3X660) FLUE GAS DESULPHURISATION SYSTEM PACKAGE			
Sl. No	Activity and operation	Characteristics / instruments		Class# of check	Type of Check	Quantum Of check	Reference Document	Acceptance Norms	Format of Record		Remarks
1	2	3		4	5	6	7	8	9	D*	10
i)	Check for Materials for fencing and gates	PVC coated chain link fencing (IS 2720), Welded wire mesh (IS 1566), Reinforced barbed tape galvanised (IS 2629) etc.	As agreed / required	A	Review of MTC	Each batch of delivery	Tech Specs and Const. Drawings		SR/MTC	√	Mfr.'s T.C. shall be correlated with the consignment received.
ii)	Check for alignments, erection painting, DFT etc.		As agreed / required	B	Physical / measurements	Each installation	Tech Specs and Const. Drawings		SR		Erection shall be as per NTPC Tech. Specs.
ii)	Acceptance of the installation and working		As agreed / required	B	Physical / measurements	Each installation	Tech Specs and Const. Drawings		SR		Erection shall be as per NTPC Tech. Specs.
6	**Galvanised Chicken Wire Mesh**	Check for Guage and Dimensions from NTPC approved Source	As agreed / required	B	Acceptance	Random for each delivery	Tech Specs and Const. Drawings		SR		
9.00	**FLOOR FINISHES AND ALIED WORKS**										
1	**Cement Concrete Flooring**										
i		Check for execution of concreting	As agreed / required	B	Physical	Random in each shift	Tech Specs and Const. Drawings		SR		
ii		Check for providing and fixing glass/ PVC strips in joints	As agreed / required	B	Physical	Random in each shift	Tech Specs and Const. Drawings		SR		
iii		Check for laying, polishing, curing, finishing for terrazzo, marble chip flooring	As agreed / required	B	Physical	Random in each shift	Tech Specs and Const. Drawings		SR		
iv		Acceptance of lines, levels and finishing	As agreed / required	B	Acceptance	100%	Tech Specs and Const. Drawings		SR		
10.00	**SANITORY INSTALLATIONS**										
1		Check for size and surface finish of all sanitory items and fixtures from NTPC approved sources, (Check MTC whereever applicable)	As agreed / required	A	Physical / review of MTC	Each lot of delivery as per Specifications	Tech Specs and Const. Drawings		SR	√	To be procured from NTPC approved source
2		Acceptance of installations of all sanitory items and fixtures	As agreed / required	B	Acceptance	100%	Tech Specs and Const. Drawings		SR		
3	**SCI, CI, S&S Pipes & Fittings etc**										
i		Check for Work man ship and finish	As agreed / required	B	Visual	Random	Tech Specs and Const. Drawings		SR		
ii		Check for Unit weight and Dimensions	As agreed / required	B	Physical	Random	Tech Specs and Const. Drawings		SR		
iii		Hydrostatic test	As agreed / required	A	Review of MTC for each delivery	Each lot of delivery as per Specifications	Tech Specs and Const. Drawings		SR	√	
11.00	**WATER SUPPLY AND ALL TYPES OF FITTINGS**										
1		Check for size and surface finish of all water supply, GI/ MS pipes and fittings, Photo Voltaic Control System etc from NTPC approved sources (Check MTC whereever applicable)	As agreed / required	A	Physical / review of MTC	each delivery as per Specifications	Tech Specs and Const. Drawings		SR	√	To be procured from NTPC approved source
2		Acceptance of installations of all water supply, GI pipes and fittings	As agreed / required	B	Acceptance	100%	Tech Specs and Const. Drawings		SR		
3	**CI, S&S Pipes & Fittings**										
i		Check for Work man ship and finish	As agreed / required	B	Visual	Random as per Specifications	Tech Specs and Const. Drawings		SR		
ii		Check for Unit weight and Dimensions	As agreed / required	B	Physical	Random	Tech Specs and Const. Drawings		SR		
iii		Hydrostatic test	As agreed / required	A	Physical / review of MTC	Each lot of delivery as per Specifications	Tech Specs and Const. Drawings		SR	√	
4	**Polyethylene Water Storage Tanks**										
i		Check for material of tanks from NTPC approved sources	As agreed / required	A	Physical / review of MTC	Each lot of delivery as per Specifications	Tech Specs and Const. Drawings		SR	√	
ii		Aceptance for instllation and fitting (IS 12701)	As agreed / required	B	Acceptance	100%	Tech Specs and Const. Drawings		SR		
12.00	**DRAINAGE AND SANITATION**										
1	**Sanitary appliances**										
i		Check for Viterous China, Glazed, ceramic sanitary appliances (Water closets, Wash basins, urinals) etc.	As agreed / required	A	Physical / review of MTC	each delivery as per Specifications	Tech Specs and Const. Drawings		SR	√	To be procured from NTPC approved source
ii		Acceptance of installation of Viterous China, Glazed, ceramic sanitary appliances (Water closets, Wash basins, urinals) etc.	As agreed / required	B	Acceptance	100%	Tech Specs and Const. Drawings		SR		
2	**SW Pipes and RCC Pipes**										
i		Check for size and surface finish of Pipes from NTPC approved sources	As agreed / required	A	Physical	100% after delivery	Tech Specs and Const. Drawings, IS458, IS 1536		SR	√	

LOGO	SUPPLIERS NAME AND ADDRESS:	INDICATIVE FIELD QUALITY PLAN									ANNEXURE- IV
		ITEM : CIVIL WORK SUB-SYSTEM : Foundations, Excavation & Fill, Concrete, Building, Masonry Etc.		QP NO. : REV. NO .: DATE : PAGE :		1 0	PROJECT: PACKAGE: CONTRACT NO. MAIN CONTRACTOR	North Karanpura STPP (3X660) FLUE GAS DESULPHURISATION SYSTEM PACKAGE			
Sl. No	Activity and operation	Characteristics / instruments		Class# of check	Type of Check	Quantum Of check	Reference Document	Acceptance Norms	Format of Record		Remarks
1	2	3		4	5	6	7	8	9	D*	10
ii		Testing of Joints	As agreed / required	B	Physical	100%	Tech Specs and Const. Drawings		SR		
i		Acceptance of installations of Pipes	As agreed / required	B	Acceptance	100%	Tech Specs and Const. Drawings		SR		Acceptance tests shall be done as per specifications
3	**CI Pipes, Covers and Frames**										
i		Check for CI and SFRC covers and frames as per IS 1726 and IS 12592 from NTPC approved sources (Check MTC whereever applicable)	As agreed / required	A	Physical / review of MTC	Each lot of delivery	Tech Specs and Const. Drawings, IS 1536, IS 12592		SR	√	
ii		Acceptance of installations of CI Pipes, Covers and Frames	As agreed / required	B	Acceptance	1	Tech Specs and Const. Drawings		SR		
4	**RCC manholes**	Acceptance of RCC manholes after completion	As agreed / required	B	Acceptance	1	Tech Specs and Const. Drawings , IS 4111		SR		
13.00	**FOUNDATION SYSTEM**										
1	**SHALLOW FOUNDATIONS**										
i		Check for the foundation excavation - Location, Layout, size, depth etc	As required / agreed	B	Physical	Each location	As per technical specifications and construction drawings		SR	√	lines and levels to be checked
ii		Check for the foundation casting - Layout, Shape, dimensitions, Reinforcement, concreting, curing etc	As required / agreed	B	Physical	Each foundation	As per technical specifications and construction drawings		SR		lines and levels to be checked. Concrete Grade to be checked as per Mix Design
14.00	**SHEETING AND OTHER WORKS**										
1		Check for Material like modular areated panel, permanently colour coated sheets , metal decking , pre-engineered buildings, AC sheeting, Fire proof doors and insulations (all tests as per tehcnical Specifications)	As per manufacturer Standards	A	Review of MTC	Each batch of delivery	Tech Specs and Const. Drawings		MTC	√	1)FQP for structural steel shall also be applicable.2) For aluminium door/windows, check for anodisation as per Tech. Spec. 3) Fire proof doors shall be procured from TAC Approved parties as per relevant IS/Tech. 4) For aluminium cladding grade of alminium to be checked.
2		Check for Storage at Site	As agreed / required	B	Visual	Random in each shift	Tech Specs and Const. Drawings		SR		
3		Installation, lap alignment & workmanship.	As agreed / required	B	Visual/ Physical	Random in each shift	Tech Specs and Const. Drawings		SR		No gas cutting of sheets acceptable . Profile sheets will be kept covered in weather proof storage &stored at accurate height to avoid any exposure of actual water. Principle of first in and first out shall be apply for erecting the sheets.
4		Installation of lining &insulation &check thermal insulationfor wall clading for thickness , density , thermal conductivityn at 50 deg c and all other tests as per IS:8183	As agreed / required	B	Testing	100%	Tech Specs and Const. Drawings		SR	√	
5		Check for the installation, alignments, finishing etc	As agreed / required	B	Visual/ Physical	Random in each shift	Tech Specs and Const. Drawings		SR/LB		
6		Fasteners for sheeting work	As agreed / required	B	Review of TC including 1000 hrs salt spray test	100%	Tech Specs and Const. Drawings		SR/LB		
7		Acceptance of each type of installation	As agreed / required	B	Visual/ Physical	Each installation	Tech Specs and Const. Drawings		SR/LB		
15.0	**PILING WORK (IF APPLICABLE)**										
15.1	**Execution**										
i		100 mm Dia Borehole	As required	A	Physical	100%	NTPC Tech. Specs		SR/LB	√	If carried out by the contractor
ii		Pile layout	Total station	B	Measurement	100%	As per appd. Drawings and technical		SR/LB	√	
iii		Recording ground level	As required	B	Measurement	Random	IS:2911, as per appd. Drawings and technical		SR/LB	√	
iv		Cleaning/Flushing of pile bore	As required	B	Visual	Random	As per appd. Drawings and technical		SR/LB	√	
v		Size of bore and During boring of pile record commencement of SPT/ core recovery to ensure socketing length equivalent in terms of the Diameter of the pile below the socketing horizon.	As required	B	Measurement	100%	As per appd. Drawings and technical specification		SR/LB	√	
vi		Trial mix to ascertain the workability and cube strength	After receiving the recommended mix design from specialist agency,	B	Physical	One for each mix proportion	NTPC tech specification		SR/LB	√	Necessary correction for moisture content and water absorption according to mix design recommendation may be carried out during the trial mix
vii		Cement content	As required	B	Physical	Once per shift	As per approved design mix.		SR/LB	√	At batching plant
viii		Pouring of concrete to project above cutoff level.	As required	B	Measurement	100%	As per appd. Drawings and technical specification		SR/LB	√	
ix		Pile termination level	SPT & core recovery	A	Soil data	As per NTPC specifications	As per appd. Drawings and technical specification		SR	√	
15.2	**Testing**										
i		Bentonite	IS:2720	A	Physical / testing	Once per source	As per IS:2720 / tech. Specs.		SR/LB	√	Review of test report

LOGO	SUPPLIERS NAME AND ADDRESS:	INDICATIVE FIELD QUALITY PLAN									ANNEXURE- IV
		ITEM : CIVIL WORK SUB-SYSTEM : Foundations, Excavation & Fill, Concrete, Building, Masonry Etc.		QP NO. : REV. NO .: DATE : PAGE :		1 0	PROJECT: PACKAGE: CONTRACT NO. MAIN CONTRACTOR	North Karanpura STPP (3X660) FLUE GAS DESULPHURISATION SYSTEM PACKAGE			
Sl. No	Activity and operation	Characteristics / instruments		Class# of check	Type of Check	Quantum Of check	Reference Document	Acceptance Norms	Format of Record		Remarks
1	2	3		4	5	6	7	8	9	D*	10
ii		Density check on sample of mud collected from pile bore bottom	Sample collection	A	Physical	As per Tech. Spec.	As per NTPC Tech Spec.		SR/LB	√	Tests to be done before placing concrete. Samples to be collected from pile bore bottom.
iii		Slump test of concrete	IS:1199	B	Physical	Every 2 hrs at pouring point of concrete	IS:2911, As per appd. Drawings and technical specification		SR/LB	√	
iv		Cube sampling for works cube test	IS:456	B	Physical	One set of 6 cubes per 50 CuM or part thereof for each grade of concrete per shift whichever is earlier.	IS:2911, As per appd. Drawings and technical specification		SR/LB	√	
v		Initial pile load test, Vertical (Compression), Lateral (horizontal) and pullout (tension).	IS:2911 / as required	A	Testing	100% for 3 nos. for each type or as specified in BOQ / Tech. Spec.	IS:2911, As per appd. Drawings and technical specification		SR/LB	√	In case of compression test method the loading shall be cyclic.
vi		Routine pile tests, compression and horizontal	Calibrated dial gauges etc. as required.	A	Testing	100% for 0.5% of the total number of piles provided for each type of test/Tech. Spec.	IS:2911, As per appd. Drawings and technical specification		SR/LB	√	Routine Test shall be conducted by direct loading method.
vii		Integrity Tests	PEM	A	Testing	100%	IS:2911, As per appd. Drawings and technical specification and suppliers manual		Test Report	√	CHP
16.0	SPECIAL ITEMS										
16.1	Earthing Mat (Grounding System)										
i	Material	Earthing mat	As agreed / required	A	EIC Approved source and review of MTC/ test reports	Each lot of delivery as per Specifications	As per relevant IS and Tech. Specs / Manufacturer's, IS 3043		SR/MTC	√	
ii		Weld sizes & length	Visual/Tape	B	Visual/ Measurement	1	Tech Specs and Const. Drawings				NTPC approved electrodes shall be used
iii		D P test	DP test Kit	A	Physical	10% at random of the offered lot	Tech Specs and Const. Drawings		TR	√	
iv		Earth test	Earthing test kit	A	Physical	1	Tech Specs and Const. Drawings,		SR	√	
16.2	Bitumen layer for tank foundation										
i	Material	Grade of bitumen	As agreed / required	A	EIC Approved source and review of MTC/ test reports	Each lot of delivery as per Specifications	As per relevant IS and Tech. Specs /MTC		SR/MTC	√	
ii	Acceptance and workmanship	Application / workmanship	As agreed / required	B	Physical	Random	Tech Specs and Const. Drawings		SR		
16.3	Composite Aluminium Panels and structural glazing										
i	Material	Type of aluminium panels / structural glazing / fasteners and fixtures / silicon sealant	As agreed / required	A	EIC Approved source and review of MTC/ test reports	Each lot of delivery as per Specifications	Technical specifications / drawings		SR/MTC	√	MTC shall cover all the properties / parameters as per technical specifications
ii	Acceptance and workmanship	Installation / workmanship	As agreed / required	B	Physical	Random	Technical specifications / drawings		SR		
		LEGEND: D * Records, indentified with "Tick" (√) shall be essentially included by supplier in QA documentation.						**DOC. NO.:**			**REV:**
		Legend to be used: Class # : A = Critical, B=Major, C=Minor; SR, TR, MTC, LB									
Manufacturer/ Sub-supplier	Main-supplier	**Categorization Witnessing & Accepting (As per NTPC QA&I System)** **Category 'A' FQA Engineer in association with Executing Engineer, Category 'B' Executing Engineer, Category 'C' Executing Engineer ;SR** = Site Register , **TR**= Test Report, **MTC =** Manufacturer's Test Certificate					**For NTPC USE**				
	Signature	This document shall be read in conjunction with NTPC Tech. Specifications, BOQ, Drawings						**REVIEWED BY**	**APPROVED BY**		**APPROVAL SEAL**

LOGO	SUPPLIERS NAME AND ADDRESS:	INDICATIVE FIELD QUALITY PLAN									ANNEXURE- V
		ITEM : STRUCTURAL STEEL WORK		QP NO. :		2	PROJECT:	North Karanpura STPP (3X660)			
				REV. NO .:		0	PACKAGE:	FLUE GAS DESULPHURISATION SYSTEM PACKAGE			
		SUB-SYSTEM : FABRICATION & ERECTION		DATE :			CONTRACT NO.				
				PAGE :			MAIN CONTRACTOR				
Sl. No	Activity and operation	Characteristics / instruments		Class# of check	Type of Check	Quantum Of check	Reference Document	Acceptance Norms	Format of Record		Remarks
1	2	3		4	5	6	7	8	9	D*	10
1.00	MATERIALS										
i		Structural steel procured from NTPC approved sources-Mechanical (YS, UTS, Elg, UT if specified),,and Chemical properties (CE as per IS)		A	Review	For each batch of each section delivered at site	Technical Specification and Construction Drawings, IS 2062		SR	√	Correlated MTC shall be verified. In the event of non submission of MTC , sample shall be selected by FQA for testing
2.00	FIT-UP										
2.01		Marking and Cutting	As agreed / required	B	Visual & Measurement	Each plate/ Section	Tech Specs and Const. Drawings/ Approved cutting plan		SR		
2.02		Match markings for trial assembled components	As agreed / required	B	Physical	Each fit-up	Tech Specs and Const. Drawings		SR		
2.03		Weld Fit Up	As agreed / required	B	Physical	Each fit-up	Tech Specs and Const. Drawings		SR	√	Edge Preparation/ Gap/ Alignment
3.00	PRE HEATING (wherever applicable)										
3.01		Pre-Heating Temperature	As agreed / required	B	Measurement	Each pre-heating	Tech Specs and Const. Drawings, Approved WPS		SR	√	
3.02		Post Weld Heat Treatment (PWHT), if required	As agreed / required	A	Time & Temperature	Each PWHT	Tech Specs and Const. Drawings, Approved WPS		SR	√	
4.00	WELDING REQUIREMENTS										
4.01		PQR and Welder's Qualification	As agreed / required	A	Physical	Each welder	Approved WPS/ PQR, AWS-D1.1/ASME IX, Tech Specs and Const. Drawings		Test Report	√	
4.02		Welding consumables	As agreed / required	B	Physical	Random in each shift	Approved WPS/ Owner Rationalized list of Electrodes.		SR	√	
4.03		Sequence of welding	As agreed / required	B	Physical	Random in each shift	Tech Specs and Const. Drawings, Agreed scheme		SR		
4.04		Removal/ grinding of temporary attachments	As agreed / required	B	Measurement	All cleats/ attachments	Tech Specs and Const. Drawings, IS-7215/Approved Drg.		SR		
4.05		Completeness after welding-Dimensions/ distortion	As agreed / required	B	Visual	Each structure component	Tech Specs and Const. Drawings		SR		
5.00	NON DESTRUCTIVE AND DESTRUCTIVE TESTING										
5.01	Fillet Welds										
5.01.01		Visual	As required/ agreed	B	Visual/ Measurement	Each welded joint	As per technical specifications and construction drawings		SR		As per requirement of Owner Engineer
5.01.02		Macro-Etch Examination	As required/ agreed	B	Physical	Main fillet weld with min one joint per built up beam, columns and crane girders	As per technical specifications and construction drawings		SR	√	

LOGO	SUPPLIERS NAME AND ADDRESS:	INDICATIVE FIELD QUALITY PLAN					ANNEXURE- V				
		ITEM : STRUCTURAL STEEL WORK		QP NO. :		2	PROJECT:	North Karanpura STPP (3X660)			
				REV. NO .:		0	PACKAGE:	FLUE GAS DESULPHURISATION SYSTEM PACKAGE			
		SUB-SYSTEM : FABRICATION & ERECTION		DATE :			CONTRACT NO.				
				PAGE :			MAIN CONTRACTOR				
Sl. No	Activity and operation	Characteristics / instruments		Class# of check	Type of Check	Quantum Of check	Reference Document	Acceptance Norms	Format of Record		Remarks
1	2	3		4	5	6	7	8	9	D*	10
5.01.03		Dye Penetration Test (DPT)	As required/ agreed	B	Physical	25% weld length of tension member of crane girder- For crane girder 5% of Weld length with min. 300mm at each location - Except Crane Girder, for all other Fillet Welds	As per technical specifications and construction drawings		SR	√	
5.02	**Butt Welds**										
5.02.01		Visual	As required/ agreed	B	Visual	Random in each shift	As per technical specifications and construction drawings		SR		
5.02.02		Dye Penetration Test	As required/ agreed	B	Physical	100% DPT after back gouging on all butt welds except for coal bunker bins 10% DPT after back gouging-For coal bunker bins	As per technical specifications and construction drawings		SR		All butt welds to be back gouged before DPT
5.02.03		Mechanical testing on production test coupons	As required/ agreed	A	Physical	Min. one joint per built up beams, coloums and crane girder.	As per technical specifications and construction drawings		SR	√	Test on production test coupons
5.02.04		Radiography Test (RT)	As required/ agreed	A	Physical	100% RT on butt welds of tension flange (bottom flange) of crane girders 5% spot RT on butt welds / at inaccessible locations UT on butt welds- For coal bunker bins 10% RT weld length of each welder on butt welds, except for crane girders and coal bunk	As per technical specifications and construction drawings		SR	√	In case of failure of any welds in SPOT/RT or UT the % of retesting shall be doubled at that particular location. Acceptance criteria of NDT on welds shall be as per AWS D1.1. Wherever RT is not feasible UT to be carried out with the approval of the Engineer
5.03	**Full Penetration Welds (Other than butt welds)**										

LOGO	SUPPLIERS NAME AND ADDRESS:	INDICATIVE FIELD QUALITY PLAN						ANNEXURE- V			
		ITEM : STRUCTURAL STEEL WORK		QP NO. :		2	PROJECT:	North Karanpura STPP (3X660)			
				REV. NO .:		0	PACKAGE:	FLUE GAS DESULPHURISATION SYSTEM PACKAGE			
		SUB-SYSTEM : FABRICATION & ERECTION		DATE :			CONTRACT NO.				
				PAGE :			MAIN CONTRACTOR				
Sl. No	Activity and operation	Characteristics / instruments		Class# of check	Type of Check	Quantum Of check	Reference Document	Acceptance Norms	Format of Record	D*	Remarks
1	2	3		4	5	6	7	8	9	D*	10
5.03.01		Ultrasonic Testing (UT)	As required/ agreed	A	Physical	100% UT on the web to flange joint of crane girder 10% UT on other full penetration joints	As per technical specifications and construction drawings		IR	√	In case of failure of any welds in SPOT/RT or UT the % of retesting shall be doubled at that particular loaction. Acceptance criteria of NDT on welds shall be as per AWS D1.1.
5.04	NON DESTRUCTIVE AND DESTRUCTIVE TESTING FOR CHIMNEY STEEL LINER										
i		Visual examination	As required/ agreed	B	Visual	100%	As per technical specifications and construction drawings, IS 822, AWS D 1.1		SR	√	As per requirement of NTPC Engineer
ii		DPT	As required/ agreed	B	Physical	100%	As per technical specifications and construction drawings, IS 822, AWS D 1.1		IR	√	
iii		RT	As required/ agreed	A	Physical	10% FOR SHOP BUTT WELD AND 15% FOR SITE BUTT WELDS	As per technical specifications and construction drawings, IS 822, AWS D 1.1				
6.00	FOUNDATION CHECKS										
6.01		Dimensions and levels	As agreed / required	B	Physical/ Measurement	Each Foundation	Tech Specs and Const. Drawings		SR	√	Shape, lines (including diagonal checks)
		Foundation Bolts (materials)	As agreed / required	A	Physical and MTC Review	Once for each lot of delivery	Tech Specs and Const. Drawings		SR/MTC	√	Foundation bolts shall conform to IS:5624 and property class shall be 4.6 as per IS:1367 (Part-3).
6.02		Foundation Bolts and Embedments	As agreed / required	B	Physical/ Measurement	Each Foundation	Tech Specs and Const. Drawings		SR	√	Measurement of Verticality, Levels, pitch distance
7.00	PRE-ASSEMBLY CHECKS										
7.01		Punch Erection marks and match marks on members	As agreed / required	B	Visual/ Physical	Each structural member	Tech Specs and Const. Drawings				Markings for - Assembly designation, Part number, Weight, Any other important identifications.
7.02		Pre-assembly as per match mark	As agreed / required	B	Visual/ Physical	Each structural member	Tech Specs and Const. Drawings				
7.03		Camber, sweep and total length after trial assembly of structure.	As agreed / required	B	Visual/ Physical	Each structural member	Tech Specs and Const. Drawings		SR	√	
7.04		Control assembly check at shop	As agreed / required	B	Visual/ Physical	Every first and tenth set of identical structure	Tech Specs and Const. Drawings				
8.00	ERECTION CHECKS										
8.01		Alignment, slopes, level, tolerances of erected member	As agreed / required	B	Measurement	Each structural member	Tech Specs and Const. Drawings		SR	√	

LOGO	SUPPLIERS NAME AND ADDRESS:	INDICATIVE FIELD QUALITY PLAN						ANNEXURE- V		
		ITEM : STRUCTURAL STEEL WORK		QP NO. :		2	PROJECT:	North Karanpura STPP (3X660)		
				REV. NO .:		0	PACKAGE:	FLUE GAS DESULPHURISATION SYSTEM PACKAGE		
		SUB-SYSTEM : FABRICATION & ERECTION		DATE :			CONTRACT NO.			
				PAGE :			MAIN CONTRACTOR			

Sl. No	Activity and operation	Characteristics / instruments		Class# of check	Type of Check	Quantum Of check	Reference Document	Acceptance Norms	Format of Record	D*	Remarks
1	2	3		4	5	6	7	8	9	D*	10
8.02		Tightening of bolts including foundation bolts with lock nuts	As agreed / required	B	Visual/ Physical	Each structural member	Tech Specs and Const. Drawings		SR	√	
8.03		Acceptance of erected structure	As agreed / required	B	Visual/ Physical	Each erected structure	Tech Specs and Const. Drawings, IS 7215 and IS 12843		SR	√	
9.00	**INSTALLATION AND ALIGNMENT OF STEEL LINER**										
i		Submission of Installation/ Erection Scheme/ methodology for all structures	-	B	Approval	Once prior to erection of each structure	Approved drawings and Technical Specifications		SR	√	
ii		Check for Erection Marks	-	B	Visual	100%	Approved drawings and Technical		SR		
iii		Check for Installation of Steel Liners	As required	B	Visual/ Acceptance	100%	Approved drawings and Technical Specifications		SR		
iv		Check for Site Joints	As required	B	Visual/ Acceptance	100%	Approved drawings and Technical Specifications		SR		
v		Check for Installation of Inlet Transition Ducts	As required	B	Visual/ Acceptance	100%	Approved drawings and Technical Specifications		SR		
vi		Check for Installation of Insulations and Expansion Compensators	As required	B	Visual, Physical, Acceptance	100%	Approved drawings and Technical Specifications		SR		Each layer of expansion Compensator tobe checked at shop for thickness, unit weight, tensile strength & elongation along with temp. withstandability for composite joints
vii		Ensure the Erection of all steel structures along with permissible tolerances and their acceptance	As required	B	Visual/ Acceptance	100%	Approved drawings and Technical Specifications		SR		
viii		Check and approval for Dismantling, Modification and Re-erection, if required for any reason	As required	B	Visual/ Acceptance	100%	Approved drawings and Technical Specifications		SR		
10.00	**PAINTING SYSTEM**										
10.01		Paining Materials and accessories	As agreed / required	A	Review of MTC	Each batch of delivery	Tech Specs and Const. Drawings		SR/MTC	√	Mfr.'s T.C. shall be correlated with the consignment received.
10.02		Surface prepration	As agreed / required	B	Physical /visual	Random in each shift	Tech Specs and Const. Drawings, Relevant code/ standards		SR	√	
10.03		DFT of paint - Over steel surface	As agreed / required	B	Physical	Each surface at random	Tech Specs and Const. Drawings		SR	√	
10.04		Acceptance of painted surfaces	As agreed / required	B	Physical	Each surface at random	Tech Specs and Const. Drawings		SR		
11.00	**PERMANENT BOLTS AND NUTS AND WASHERS**										
11.01		Material	As agreed / required	A	Physical and MTC Review	Once for each lot of delivery	Tech Specs and Const. Drawings		SR/MTC	√	All bolts for connections shall be conforming to IS: 12427 and of property class 5.6 as per IS:1367 (Part 3). Nuts shall conform to IS:1363 (Part 3) of property class 5
11.02		Contact surfaces before bolting	As agreed / required	B	Physical	Random before asembly for bolting	Tech Specs and Const. Drawings, IS 4000		SR		

LOGO	SUPPLIERS NAME AND ADDRESS:	INDICATIVE FIELD QUALITY PLAN						ANNEXURE- V		
		ITEM : STRUCTURAL STEEL WORK		QP NO. :		2	PROJECT:	North Karanpura STPP (3X660)		
				REV. NO .:		0	PACKAGE:	FLUE GAS DESULPHURISATION SYSTEM PACKAGE		
		SUB-SYSTEM : FABRICATION & ERECTION		DATE :			CONTRACT NO.			
				PAGE :			MAIN CONTRACTOR			

Sl. No	Activity and operation	Characteristics / instruments		Class# of check	Type of Check	Quantum Of check	Reference Document	Acceptance Norms	Format of Record	D*	Remarks
1	2	3		4	5	6	7	8	9		10
11.03		Inspection of the assembled bolts	As agreed / required	B	Physical	Randomly in each shift for assembeled bolts	Tech Specs and Const. Drawings, IS 4000		SR		
11.04		Tensioning	As agreed / required	B	Physical	Randomly during snug tight test and after full tensinoning	Tech Specs and Const. Drawings, IS 4000		SR	√	
11.05		Acceptance of installed bolts	As agreed / required	B	Physical	Each bolt	Tech Specs and Const. Drawings		SR		
12.00	**STAINLESS STEEL HAND RAILS**										
12.01		Material	As agreed / required	A	Physical/MTC Review(In case procured by contractor)	Once for each lot of delivery	Tech Specs and Const. Drawings		SR/MTC	√	Also check grade of steel
12.02		DPT for welding	As agreed / required	A	Physical	Random for each fabrication	AWS D1.1 / 'Tech Specs and Const. Drawings		SR/LB	√	WPS shall be submited for Owner approval , electrodes used shall be as specified in WPS
12.03		Acceptance of stainless steel hand rails	As agreed / required	B	Physical	Each installation	Tech Specs and Const. Drawings		SR		
13.00	**PTFE SLIDING BEARINGS AND ELASTOMERIC BEARINGS**										
13.01		Material from approved source	As agreed / required	A	Physical and MTC Review	Once for each lot of delivery	Tech Specs and Const. Drawings		SR/MTC	√	
13.02		Acceptance of installation of bearings	As agreed / required	B	Physical	Each installation	Tech Specs and Const. Drawings		SR		

		LEGEND: D * Records, indentified with "Tick" (√) shall be essentially included by supplier in QA documentation.	**For Owner USE**	**DOC. NO.:**	**REV:** 0
		Legend to be used: Class # : A = Critical, B=Major, C=Minor; SR, TR, MTC, LB			
Manufacturer/ Sub-supplier	**Main-supplier**	**Categorization Witnessing & Accepting (As per Owner QA&I System)** **Category 'A' FQA Engineer in association with Executing Engineer, Category 'B' Executing Engineer, Category 'C' Executing Engineer ;SR = Site Register , TR= Test Report,MfrTC = Manufacturer's Test Certificate**			
Signature		This document shall be read in conjunction with Owner Tech. Specifications, BOQ, Drawings		**REVIEWED BY**	**APPROVED BY** / **APPROVAL SEAL**

SUB-SECTION-VI

PRE-COMMISSIONING

PRE-COMMISSIONING ACTI□ITIES□ COMMISSIONING OF FACILITIES AND INITIAL OPERATIONS

1.00.00 GENERAL

1.01.00 The pre-commissioning and commissioning activities including Guarantee tests, checks and initial operations of the equipment furnished and installed by the Contractor shall be the responsibility of the Contractor as detailed in relevant clauses in Technical Specification. The Contractor shall provide, in addition, test instruments, calibrating devices, etc. and labour required for successful performance of these operations. If it is anticipated that the above test may prolong for a long time, the Contractor's workmen required for the above test shall always be present at Site during such operations.

1.02.00 It shall be the responsibility of the Contractor to provide all necessary temporary instrumentation and other measuring devices required during start-up and initial operation of the equipment systems which are installed by him. The Contractor shall also be responsible for flushing & initial filling of all oils & lubricants required for the equipment furnished and installed by him so as to make such equipment ready for operation. The Contractor shall be responsible for supplying such flushing oil and other lubricants unless otherwise specified elsewhere in these specifications & documents.

1.03.00 The Contractor upon completion of installation of equipments and systems, shall conduct pre-commissioning and commissioning activities, to make the facilities ready for sustained safe, reliable and efficient operation. All pre-commissioning/ commissioning activities considered essential for such readiness of the facilities including those mutually agreed and included in the Contractors quality assurance program as well as those indicated in clauses elsewhere in the technical specifications shall be performed by the Contractor.

2.00.00 TESTING □COMMISSIONING PROCEDURES

The contractor shall submit his testing / commissioning check lists and procedures for various equipments / systems covered under the contract at least 10 months before the actual commissioning of the equipments / systems for review and approval of employer.

The testing / commissioning procedures are to be of a standard format in order to maintain consistency of presentation, content and reporting. The list of commissioning check lists and procedures to be submitted and their content details shall be agreed upon during preaward discussions.

An indicative list of Testing / Commissioning procedures and Standard Checklists and the details regarding the contents are enclosed as annexure at the end of this

sub-section of section-VI, Part B. The actual list of such equipments / systems shall depend on the equipments / systems being supplied by the contractor.

i) Annexure-I : Standard Checklist of items

ii) Annexure-II : Testing / Commissioning Procedure

iii) Annexure-III : Commissioning procedures requiring approval of Employer.

iv) Annexure – IV : Brief write up on Contents of Testing / Commissioning Procedures

□.00.00 PRECOMMISSIONING □ COMMISSIONING ACTI□ITIES

3.01.00 **G□□□r□□**

The pre-commissioning activities including some of the important checks & tests for certain major equipment/ systems (as a minimum) are described below, although it is the Contractor's responsibility to draw up a detailed sequential & systematic list of checks / tests and various activities / procedures connected with pre-commissioning of the complete facilities with all systems, sub-systems and equipment supplied and installed by him and get the same approved by the Employer.

3.02.00 **PRE-COMMISSIONING ACTI□ITIES□TESTS:**

3.02.01 **A□r □□d G□□ T□□□□□□□ T□□□**

After completion of installation of Booster fans (if required), ducts, absorber, GGH and before commencement of application of thermal insulation a test shall be performed on the FGD system by the contractor to prove or to establish the tightness of the erected equipments within the Terminal points. The procedure adopted for such tests shall have the prior approval of the Employer. Normally physical leak detection method by pressurizing the section under test by running Temporary blower is adopted. The contractor may adopt any other better method of testing.

All equipments including any temporary blanking, if required, for the above test shall be provided by the Contractor.

The Contractor's air and gas tightness test procedure shall be such that it shall enable conductance of air/gas tightness test on the ducts in segmented manner (as and when these duct segments are ready), so that these duct segments can be immediately released for application of insulation after their gas tightness tests. Contractor shall made all necessary arrangement for conducting tests in this

manner. Any blanking etc. on the duct side required for testing of duct segments shall be provided by Contractor. Contractor shall bring fan / blower (s) of adequate size / capacity and other necessary instruments so that these tests can be conducted. The above equipment shall be brought to site by the Contractor on temporary basis and shall be taken back after successful completion of air / gas tightness test.

3.02.03 All pre-commissioning tests & activities as indicated in Annexure-I, II & III and elsewhere in the technical specification shall be performed by the Contractor.

3.03.00 **COMMISSIONING OF FACILITIES**

G□□□r□□

Upon completion of pre-commissioning activities/test the Contractor shall initiate commissioning of facilities. During commissioning the Contractor shall carryout system checking and reliability trials on various parts of the facilities.

Contractor shall carry out these checks/tests at site to prove to the Employer that each equipment of the supply complies with requirements stipulated and is installed in accordance with requirements specified. Before the plant is put into initial operation the Contractor shall be required to conduct test to demonstrate to the Employer that each item of the plant is capable of correctly performing the functions for which it was specified and its performance, parameters etc. are as per the specified/approved values. These tests may be conducted concurrently with those required under commissioning sequence.

The Contractor shall finalize the protocol of check lists, after erection of the system and equipment, as per International Codes/Standard with the Employer.

The Contractor shall furnish requisite no. of copies of procedures and list of start up, pre-commissioning, commissioning and initial operation tests for Employer's approval.

The Contractor shall also demonstrate the performance of all C&I equipment, the tests on main equipment or prior to that as the case may be.

Other tests shall be conducted, if required by the Employer, to establish that the plant equipments are in accordance with requirements of the specifications.

3.03.01 The Commissioning tests/checks shall specifically include but will not be limited to following:

(a) Checks on the operation of all controls of isolating gas and air dampers

(b) Checks on operation of fans to ascertain level of noise and vibration

(c) Test running of all pumps, blowers/compressors

(d) Checks on operation of all GGH and adjustment of seals

(e) Checks on operation of all soot blowers and retraction gear and the sequences control.

(f) Checks on operation of all rotating equipments to ascertain level of noise and vibration

(g) Standard commissioning tests and procedures as per Contractor's practice for FGD plant

(h) Checks on operation of all individual control loops in the FGD control loops in the FGD control system.

(i) Checks on inter-relation between each control loop in the FGD control system.

(j) Calibration tests of orifice, flow nozzles, instruments and control equipment to the extent included in these specifications.

(k) Checks on operation of all static equipments to ascertain level of noise and vibration

(l) Tests on Control & Instrumentation (C&I) Equipments

The Contractor shall finalise the protocol of check lists, after erection of the system and equipment, as per International Codes/Standard with the Employer.

The Contractor shall furnish requisite no. of copies of procedures and list of start up, precommissioning, commissioning and initial operation tests for Employer's approval.

The Contractor shall also demonstrate the performance of all C&I equipment, the tests on main equipment or prior to that as the case may be.

Other tests shall be conducted, if required by the Employer, to establish that the plant equipments are in accordance with requirements of the specifications.

3.03.02 **B□□□□□ □□□□□□ □□□□ □□□□□□ □**

All pre-commissioning tests &activities as required for successful running of the equipment or as mentioned in the technical specification elsewhere shall be performed by the contractor.

4.00.00 **INITIAL OPERATION**

Upon completion of system checking/tests and as a part of commissioning of facilities, complete FGD plant/facilities shall be put on initial operation for a period of thirty (30) days or 720 hours as stipulated in General Technical Requirements.

□.00.00 The Contractor shall conduct all the commissioning tests and undertake commissioning activities pertaining to all other auxiliaries and equipments including all Electrical & C&I equipment/systems not specifically brought out above but are within the scope of work and facilities being supplied & installed by the Contractor and follow the guidelines indicated above or elsewhere in these technical specifications (Section-VI).

□.00.00 The Contractor shall conduct all the commissioning tests and undertake commissioning activities pertaining to all other auxiliaries and equipments including all Electrical & C&I equipment/systems not specifically brought out above but are within the scope of work and facilities being supplied & installed by the Contractor and follow the guidelines indicated above or elsewhere in these technical specifications (Section-VI).

□.00.00 **COMMISSIONING SPARES**

7.01.00 It will be the responsibility of the Contractor to provide all commissioning spares including consumable spares required for initial operation till the Completion of Facilities. The Contractor shall furnish a list of all commissioning spares within 60 days from the date of Notification of Award and such list shall be reviewed by the Employer and mutually agreed to. However, such review and agreement will not absolve the Contractor of his responsibilities to supply all commissioning spares so that initial operation do not suffer for want of commissioning spares. All commissioning spares shall be deemed to be included in the scope of the Contract at no extra cost to the Employer.

7.02.00 These spare will be received and stored by the Contractor at least 3 months prior to the schedule date of commencement of initial operation of the respective equipment and utilized as and when required. The unutilized spares and replaced parts, if any, at the end of successful completion of guarantee tests shall be the property of the Contractor and he will be allowed to take these parts back at his own cost with the permission of Employer.

ANNE□URE-I

STANDARD CHECKLIST

This is an indicative list of items. The actual list shall depend on the Equipment / System being supplied by the contractor.

MECHANICAL

□AL□ES

1. Manually Operated Valve
2. Electrically Operated Valve
3. Pneumatically Actuated Valve
4. Hydraulically Actuated Valve
5. Safety Valve
6. Electromatic Relief Valve
7. Steam Trap
8. Non Return Valve (including Hydraulic/ Pneumatic QCNRVS)
9. Control Valve
10. Relief Valve
11. Differential Pressure Regulating Valve
12. Pinch valve

TANKS □ PRESSURE □ESSELS

1. Limestone silos
2. Gypsum storage silos
3. Limestone slurry tanks
4. Filtrate tank
5. Waste water tank
6. Secondary hydrocyclone feed tank
7. Lime dosing tank
8. Process water tank
9. Absorber
10. Auxiliary absorbent tank

11. Mill circuit tank
12. Any other tank not covered above
13. Vacuum tanks
14. Air Receiver(if any)

PUMPS

1. Slurry recirculation pumps
2. Gypsum bleed pumps
3. Limestone slurry pumps
4. Process water pumps
5. All other slurry pumps
6. Vacuum pumps
7. Sump pumps

PIPE WORK SYSTEM

1. Steam services
2. Water services
3. Slurry services
4. Air services
5. Constant load support
6. Spring supports
7. Hangers and other Supports

STRAINER AND FILTER

1. Strainer / Filter Basket Type
2. Strainer Rotary (Low Pressure)
3. Filter & Strainers Centrifugal Separators
4. Filter & Strainer Y-Type
5. Filter & Strainer (Plate Type)
6. Purifier
7. Filter – Compressed Air Line

FANS □ COMPRESSORS

1. Booster Fans (if provided) – Axial Flow pressure Lubricated
2. Oxidation Blowers/Compressors-General

DAMPERS □ GATES

1. Manually Operated Damper
2. Pneumatically Operated Damper
3. Electrically Operated Damper
4. Manually Operated Gates
5. Pneumatically Operated Gate
6. Electrically Operated Gate

DUCT WORK

1. Flue Gas Ducting
2. Expansion Joints
3. Observation & Access Door

CRANES AND ELE□ATORS

1. Crane
2. Hoists
3. Passenger cum goods elevator

POWER TRANSMISSION

1. Power Transmission Gear Box
2. Bearings
3. Couplings

FGD □ AU□.SYSTEM

1. Agitators
2. Air Motor
3. Process trestle

4. Limestone feeder
5. Vacuum belt filter
6. Limestone ball mill
7. Limestone Hydrocyclones
8. Primary Hydrocyclones
9. Secondary Hydrocyclones
10. Absorber internals
11. Absorber Auxiliaries

ELELCTRICAL

1. D.C. Motor
2. HV Squirrel Cage Induction Motor
3. 415 V Squirrel Cage Induction Motor
4. Motor Operated Actuators
5. Transformers
6. Aux. Control and Relay Panel Desk
7. HT & LT SWITCHGEARS/MCC
   - (I.) STANDARD CHECLISTS FOR ALL TYPES OF RELAYS USED IN SWITCHGEARS PROTECTION SYSTEM
   - (II.) PT CARRIAGE AND CUBICLES
   - (III.) CABLE/BUS DUCT/BUS BARS
   - (IV.) CONTRACTOR MODULE
   - (V.) SWITCH FUSE MODULE
   - (VI.) MASTER PANEL OF LUBE OIL PANEL
   - (VII.) FEEDER PANEL OF LUBE OIL PANEL
   - (VIII.) SPACE HEATER AND CABLE MODULE
   - (IX.) HT CIRCUIT BREAKER
   - (X.) 415 V CIRCUIT BREAKER
8. POWER CABLE
9. AUXILIARY CABLE
10. D.C. CABLE
11. EXPLOSION PROOF ELECTRICAL EQUIPMENT

12. JUNCTION BOX
13. CONTROL TRANSFORMER MODULE
14. BRUSH GEAR ASSEMBLY
15. AUX. CONTROL AND RELAY PANEL DESK
16. INDICATING INSTRUMENT
17. RECORDING INSTRUMENT
18. INTEGRATING INSTRUMENT
19. D.G SET
20. STATION LIGHTING

CONTROL □ INSTRUMENTATION

1. Conductivity Measuring Equipment Including Test Procedures
2. pH Analyser Including Test procedure
3. Silica Analyser
4. Level Switch (Float Actuated)
5. Level Switch (Electrode Type)
6. Level Switch (Displacer Actuated)
7. Transmitter (Float Operated Pneumatic Output including Testing procedures
8. Level indicator (Float/Pulley Type)
9. Local Temperature Indicator Including Test Procedure
10. Resistance Thermometer Element Including Test procedure
11. Thermocouple Element and Connecting Cable
12. Thermocouple and Resistance Thermometer Convertor/Transmitter Including Test Procedures
13. Temperature Switch Including Test Procedure
14. Cold Junction Boxes
15. 0_2Analyser
16. SO2 analyzer
17. 0_2 in Hydrogen including Test procedures
18. Pressure and Vacuum Gauge
19. Pressure and Vacuum Switch Including Test procedures
20. Differential Pressure Transmitter including Test Procedures

21. Differential pressure switch including Test procedures
22. Flow indicator (Variable Area)
23. Orifice plate
24. Flow Switch
25. Nozzle
26. Flow Integrator (pneumatic input) including test procedure
27. Flow indicator (Float Operated) Including Test Procedure
28. Venturi (Fluid)
29. Flow Switch (Magnetic Type)
30. Limit Switches
31. Turbine Supervisory Measuring System
32. Position Measurement & Indication Including Test procedures
33. Vibration Measurement
34. Digital Indicator
35. Moving Coil Indicator Including Test Procedures
36. Recorder Including Test procedure
37. Flame Scanner
38. Electrical Auto Manual Control Station
39. Push Button Module
40. Test Procedure for Electronic Modules of DDCMIS
41. Alarm Annunciator Equipment Including Test Procedure
42. Test procedure for Adjustment of Modulating Controller-PID Term
43. Test Procedure Indicating Controller-Electrical Input & Pneumatic Output
44. Density monitors
45.

AIR CONDITIONING □ □ENTILATION SYSTEM

ANNE□URE-II

TESTING □COMMISSIONING PROCEDURES

Following is an indicative list of equipments / systems for which Testing / Commissioning procedures are to be submitted. The actual list will depend on the equipment / system being supplied by the Contractor.

S. N□	DESCRIPTION
FGD	
1.	Booster Fan (if provided)
2.	Absorber System
3.	Limestone grinding system
4.	Absorber system
5.	Gypsum dewatering system

ANNE□URE-III

COMMISSIONING PROCEDURES REQUIRING APPRO□AL OF EMPLOYER

S.NO.	DESCRIPTION
1.	AIR & GAS TIGHTNESS TEST
2.	OIL FLUSHING OF LUB OIL SYSTEM OF ROTARY EQUIPMENTS
3.	LIMESTONE GRINDING SYSTEM
4.	GYPSUM DEWATERING SYSTEM

ANNE□URE-I□

BRIEF WRITE UP ON THE CONTENTS OF TESTING □COMMISSIONING PROCEDURE

Testing / Commissioning Procedure is required to be of a standard format in order to maintain consistency of presentation, content and reporting. These should contain the following sections to make the document a self contained one.

1. Plant Details / Design data
2. Objective
3. Proposal
4. Services Required
5. Safety Precautions
6. Emergency Procedures
7. State of the Plant (Status in respect of erection completion of Mech, Elect and C&I items)
8. Method
9. Completion / Acceptance Criteria
10. Appendix
    - Result
    - Log sheet
    - Drawing etc.

NTPC Limited

(A Government of India Enterprise)

NORTH KARANPURA SUPER THERMAL POWER PRO□ECT (□□□□0MW)

PART – B

TECHNICAL SPECIFICATIONS

SECTION – VI

FOR

FLUE GAS DESULPHURISATION (FGD) SYSTEM PACKAGE

BIDDING DOCUMENT NO.: CS-4410-10□-2

NTPC Limited

(A Government of India Enterprise)

NORTH KARANPURA SUPER THERMAL POWER PRO□ECT (□□□□0MW)

PART - B

TECHNICAL SPECIFICATIONS

SECTION – VI

FOR

FLUE GAS DESULPHURISATION (FGD) SYSTEM PACKAGE

BIDDING DOCUMENT NO.: CS-4410-10□-2

(This document is meant for the exclusive purpose of bidding against this Package and shall not be transferred, reproduced or otherwise used for purposes other than that for which it is specifically issued).

SUB-SECTION-I-M

MECHANICAL EQUIPMENTS & SYSTEMS

SUB-SECTION-I-M1	**FLUE GAS DESULPHURISATION SYSTEM**
SUB-SECTION- I-M2	**LIME STONE & GYPSUM HANDLING SYSTEM**
SUB-SECTION- I-M3	**AIR CONDITIONING & VENTILATION SYSTEM**
SUB-SECTION- I-M4	**FIRE DETECTION & PROTECTION SYSTEM**
SUB-SECTION- I-M5	**ECW SYSTEM**
SUB-SECTION- I-M6	**PIPING**
SUB-SECTION- I-M7	**MDL**

SUB-SECTION-I-M1

FLUE GAS DESULPHURISATION SYSTEM

FLUE GAS DESULPHURIZATION (FGD) SYSTEM

1.00.00 GENERAL

The design/specifications/sizing of various plants/systems/equipment offered for Flue Gas Desulphurisation (FGD) System shall comply with the requirements detailed hereinafter:

1.01.00 **System Description**

The Flue Gas Desulphurisation (FGD) System shall be based on Wet Limestone Forced Oxidation process. The FGD system shall be installed downstream of the Induced Draft (ID) fans (Employer's scope).The flue gas shall be drawn from air preheater outlets of the balanced draft, pulverised coal fired Steam Generator and guided through adequately sized duct work into the specified number of independent gas streams of each Electrostatic Precipators. The flue gas after the Electrostatic Precipitators shall be led to the suction of the ID fans. The flue gas temperature may approach the economiser outlet temperature of about 300℃ in case the regenerative airpreheaters fails to operate. The Contractor shall take this aspect into account while designing the Flue Gas Desulphurisation (FGD) System.

1.02.00 **Service Conditions**

The Steam Generators, being provided by Employer, are designed to burn pulverised coal having properties as indicated in Sub-section-V, Part-A, Section-VI, of Technical Specifications. Also HFO/HPS/LSHS and LDO shall be used during startup and at low loads for warm up and flame stabilization. The design of Steam Generator shall not call for any oil support for flame stabilization beyond 40 % BMCR load when firing any coal. Further, the frequency and duration for startup and low loads operation may be quite long during the first year of unit commissioning and operation. The Steam Generator has been designed for cyclic/two shift operation. Expected numbers of Steam Generator start-ups during 25 years of design life are as follows:

	Type of Starts	**Number of Starts**
a.	Hot start (after 8 hours of unit shut down)	4000
b.	Warm start (after 36 hours of unit shut down)	1000
c.	Cold start (after 72 hours of unit shut down)	150

The Contractor, shall take into account the entire characteristics of expected combination of fuels to be fired and the expected numbers of Steam Generator start-ups while designing the FGD system.

1.03.00	**Design Criteria**
1.03.01	The Flue Gas Desulphurisation (FGD) System shall be designed to meet all the conditions specified above. Representative coal and ash analysis for the expected coal and oil are given in clause no. 5.00.00 of Sub-Section-V, Part-A, Section-VI of Technical Specification. The FGD system and all the associated auxiliaries shall be designed to comply with the requirements stipulated under 'Guarantee Point' and 'Design Point' conditions indicated in clause 3.00.00 of Sub-Section-V, Part-A, Section-VI of the Technical Specification. The values indicated for FGD sizing shall be considered as minimum design criteria. These shall be modified to more conservative values if Contractor experience warrants the same. However, no credit shall be given to the Contractor for this during evaluation of the bids. Utilization of these values in no way relieves the Contractor of his responsibility to meet all the guarantee requirements. The Contractor shall also furnish along with his offer the detailed calculations and data along with his Bid to establish as to how the Bidder will meet the efficiency requirements both at design and guarantee point as specified in FGD sizing criteria.
1.03.02	The FGD system shall be installed downstream of the ID fans and shall be based on wet Limestone Forced Oxidation Process. The FGD system shall be designed to achieve the required SO_2 capture without the use of oxalic acid or any other additives. The FGD System shall be designed so as to be in operation when Steam Generator is in operation. However, provision has be made by the Employer for facilitating operation of unit with FGD bypass. This shall also facilitate the online maintenance of absorber system and associated equipment's. The arrangement of the flue gas system shall allow complete isolation of the absorber from the gas side, with the unit in operation. For this purpose. Motorized Guillotine type gates shall be provided at (i) hot gas inlet to Absorber and (ii) in the bypass duct. Further, Quick opening Bi-plane motorized/pneumatic damper along with 2x100% seal air fans shall be provided in the by-pass duct. The same shall also be taken into account while designing the control & logics for the FGD System.
1.03.03	The wet absorber system shall be designed to maintain the required SO_2 removal.
1.03.04	In order to be compatible to all possible modes of operation, the design of the FGD plant shall enable short start-up times, compatible with load changes in the Steam Generator and shall ensure reliable mode of continuous operation.
1.03.05	The flue gas desulphurization plant (FGD) shall be designed to be operated with limestone as specified in Sub-Section-V, Part-A, Section-VI of the Technical Specification.
1.03.06	The FGD and the ancillary facilities shall be suitable for unlimited operation with all transients and at any load point between the minimum and maximum load point of the Steam Generator. Further, the FGD plant shall be suitable for an unlimited operation at any pollutant concentrations between minimum and maximum without

	exceeding the emission values of SO_2 emission of less than 100 mg/Nm_3 (6% O_2 dry).
1.03.07	In case of failure of the SG and ancillary equipment, the FGD plant shall be brought automatically to the off-load operation without restriction by the current load case by suitable measures.
1.03.08	In case of a power failure all items of equipment (e.g. minimum one agitator in absorber and limestone slurry tank, flue gas damper upstream & downstream of FGD, Process water pump & lube oil system of Booster Fan & Ball Mill) which may cause irreversible damage to the FGD System shall be connected to the emergency power supply system to be provided by the Contractor. Bidder shall furnish a list of all such Auxiliaries in their bid proposal.
1.03.09	In case of shutdown and outage periods, draining and flushing of limestone slurry and gypsum slurry pipe work, tanks and all other items being in contact with limestone slurry or gypsum slurry shall be possible without restriction and without necessity of extensive or unusual preparation and activity. Draining and flushing which are required even during short time outages or an emergency shutdown shall be started automatically and by remote control from the Control Room.
1.03.10	AII items or equipment which are subject to wear, abrasion or failure (e.g. nozzles, pumps, pipe work, etc.) shall be designed and installed for easy replacement, repair and maintenance.
1.03.11	The design and the construction shall be performed so as to avoid stress corrosion cracking, galvanic or other types of corrosion. Especially when using two different alloys, appropriate measures shall be taken to avoid corrosion. This is subject to approval by the Employer.
1.03.12	All items of equipment including flue gas ducts, expansion joints, etc. shall be designed considering thermal and mechanical strength as a function of the maximum temperature which might occur in case of a failure of any upstream equipment.
1.03.13	Waste water which might be generated during flushing and cleaning procedures of the equipment (e.g. lime slurry bins, pipes, trucks, etc.) shall be collected in sump and shall possibly be reused in the wet absorber.
1.04.00	**Justification of Proposed Design**
1.04.01	All the design procedures, systems, and components proposed shall have already been adequately developed and have demonstrated good reliability under similar or more arduous conditions elsewhere.
1.04.02	The Bidder shall submit with the offer, comprehensive information on how the L/G ratio, mass balance, spray nozzle cone angle, spray nozzle arrangement, limestone consumption etc. of the proposed design has been arrived at. The Contractor shall also submit alongwith the offer, a detailed write up on the proposed design features with recent design modifications, if any, and their specific advantages over the previous designs.

1.05.00	**Statutory Approval**
	The engineering, design, supply and installation of FGD system and the associated auxiliaries shall comply with the applicable safety code and regulation of the locality where the system is being installed.
1.06.00	**Location & Layout Requirements**
1.06.01	The Contractor shall offer the best design to accommodate the Flue Gas Desulphurisation (FGD) System and Lime stone & Gypsum handling & storage system within the confines of the space available. The location of FGD System and associated facilities have been indicated in the tender drawings No. 9578-999-POM-F-001 & General Layout Plan.
1.07.00	**Capital Overhaul of FGD System**
	Employer envisages to carryout the capital overhaul of units once in three (3) years. The design and materials for various equipments/auxiliaries etc. shall be selected by the Contractor keeping in view the above requirement of the Employer, such that no major repairs/replacements, requiring shutdown of the unit, are needed in between the capital overhauls.
1.08.00	**Maintenance**
1.08.01	The Contractor shall provide adequate handling facilities & approach as for carrying out on-line and off-line maintenance of the FGD system and its auxiliaries. In order to carry out on-line maintenance, it shall be possible to readily disassemble, repair and reassemble the equipment supplied in the shortest period.
1.09.00	**Noise level**
	The equivalent weighted average of sound level measured at a distance of 1.5 m above floor level in each elevation and one meter horizontally from the base of any equipments furnished and installed under these specifications, expressed in decibel to a reference of 0.0002 microbar, shall not exceed 85 dB(A).
2.00.00	**EQUIPMENTS AND SYSTEMS SPECIFICATIONS**
	Specified hereafter are the minimum acceptable functional requirements of the Employer, and all components, equipments and systems for the Flue Gas Desulphurisation System shall be designed to cater to these requirements. Compliance to various stipulations of the Technical Specifications, functional requirements of Employer and utilization of various parameters and their values in the specification by the Contractor shall in no way relieve the Contractor of his responsibilities to meet all guarantee requirements or of providing completely safe and reliable operating equipment/systems.

The complete FGD system and the associated auxiliaries shall be designed by the standard industrial practices. The FGD system shall be designed to achieve the required SO_2 capture without the use of oxalic acid or any other additives. Only field proven materials for similar application shall be used for the system. The complete installation of liners shall be made under the supervision of the liner supplier as per their guidelines. In the execution of the welds contractor must ensure that welding material has same corrosion resistance as the actual plate surface.

Alloy to carbon steel welds must either be hidden behind a covering strip of alloy material, or be executed by a special welding procedure ensuring the same quality at the weld surface as the alloy lining. All welding which shall be in the contact with process fluids shall be executed under the supervision of the designer/manufacturer.

3.00.00 FLUE GAS SYSTEM

3.01.00 The entire flue gas system, flue gas ducts, absorber etc. shall be designed to meet the following conditions:

1.	Design internal pressure at 67% yield strength (mm wc)	+660 and -150 mmwc or maximum conceivable head of Booster fan (if provided), whichever is higher
2.	Design Inlet Gas Temperature (deg.C)	150
3	Short temp excursion temperature of inlet gas (for approx. fifteen (15) minutes at a time) (deg. C)	300
4.	Inlet Dust Burden in Gas (mg/Nm3)	200
5.	Maximum flue gas velocity through the Absorber (M/sec)	Not more than 4 m/s at Design Point Conditions
6.	Recirculation Slurry pH	Not less than 5.5 under all operating conditions

3.02.00 Design

3.02.01 The flue gas ducts shall be sized and designed to meet all the criteria as specified in Cl. No 17.00.00 this subsection.

3.02.02 All ducts with operating temperature above 60^0C shall be insulated in accordance with cl. No. 18.00.00 of this sub section.

3.02.03 The duct layout shall ensure that there is no accumulation of acid mist on the duct floor.

3.02.04	The duct to Absorber inlet shall be made of Carbon steel of minimum 7mm thickness. The duct from Absorber outlet to wet stack inlet shall be made of cladded sheet of minimum 2 mm thickness of either Titanium (Grade 2 as per ASME SB265) or C-276 over 8 mm thick (minimum) mild steel base metal. Cladding shall be done to achieve the required quality as per ASTM B 898-11.
3.02.05	In addition to the base offer as described above, the bidder may also submit an alternate offer for a different material / lining of duct from Absorber outlet to stack, if the bidder has previous experience of the same. The bidder should have supplied a similar design of duct in previous installations for similar application. Bidder shall indicate the applicable price implication for such an alternate offer in the relevant Bid Proposal sheet. The Bidder shall also furnish details of the previous installations of such system and bring out all the technical features of the system proposed. Bidder to note that application of lining material in the ducts shall be carried out under the supervision of designer/manufacturer. Bidder to note that application of lining material in the duct shall be carried out under supervision of Designer/Manufacturer.
3.02.06	Wherever required, expansion joints of proven design shall be provided in the ducts to take care of differential expansion in the system. The material chosen for expansion joints shall suitable for the duty conditions and the corrosive atmosphere of the FGD system and shall be field proven for similar applications. The expansion joints shall be guaranteed for faultless material and workmanship, for a minimum guaranteed life of not less than 20000 hrs. of operation. During Guarantee period any defects noticed in the expansion-joints due to faulty material and workmanship shall be rectified by the Contractor free of cost.
3.02.07	The Contractor, shall take into account the entire characteristics of expected combination of fuels to be fired, for the complete load range of operation and the expected numbers of Steam Generator start-ups while designing the Chimney flue liner. The chimney flue liner cladding shall be made of 2 mm thick Titanium (Grade 2 as per ASME SB265) or C-276 alloy over 8 mm thick (minimum) mild steel base metal of flue liner. Cladding shall be done to achieve the required quality as per ASTM B 898-11. External surface of chimney flue liner projecting over the chimney roof shall be wrapped with 2 mm thick Titanium / C-276 sheet over insulation. The stack shall be designed as per the latest guidelines of EPRI Wet Stack Design Guide. The design of wet ducts and stacks system shall consider the Stack liquid discharge (SLD), Corrosion/chemical attack, Condensate collection system and its drainage etc.
3.03.00	**Gates & Dampers**
3.03.01	The arrangement of the flue gas system shall allow complete isolation of the absorber from the gas side, with the unit in operation. Guillotine gate type damper is being provided by the Employer before the suction of each Booster fan. A gas tight, motor operated Guillotine gate type damper shall be provided by the Contractor at the outlet of each booster fan. A Pneumatic operated multi louver

	damper with seal air arrangement shall also be provided by the Contractor in the clean gas duct after GGH.
3.03.02	All dampers shall be designed to withstand the operating flue gas temperature without distortion.
3.03.03	There shall not be any backlash, play, etc. with linkage mechanism, actuator and final control element.
3.03.04	Thermal expansion of ducting shall not produce stress in louvers, linkage arrangement etc.
3.03.05	Outlet dampers of seal air fans shall be pneumatically operated, suitable for remote manual operation.
3.03.06	All pneumatically operated interlocked dampers actuators shall be provided with solenoid valves.
3.03.07	A damper in the bypass duct is being provided by the Employer for quick opening to allow bypass to come into operation in case of emergency. The damper shall be capable of quick opening during emergency conditions within a time of 10-20 secs. Bidder should indicate the required opening time for bypass damper for emergency operating condition. All the gates shall be designed for tight shut off. The Guillotine gate type dampers mentioned at Clause No. 3.03.01 above shall have a guaranteed gas tightness efficiency (on flow) of not less than 99.95% along the duct as well as from the duct to atmosphere or from atmosphere to the duct, depending on the pressure in both the damper open and damper closed condition without the use of seal air fans of the damper. The dampers shall be 100% leak tight with seal air fans under operation. The gas tightness shall be demonstrated at shop for minimum one type of damper of each type and size.
3.03.08	The blades and frames of the dampers provided at the outlet of Booster fan in the untreated gas path shall be made of carbon steel. In the FGD outlet treated gas path the frame of the damper shall be made of STEN-1 or better material, the blades shall be made of SS317LMN or better material and the seals shall be made of Alloy C- 276 or better material.
3.03.09	The dampers shall be pneumatically operated and controlled from the control room. Provision shall be made for giving signal automatic bypass controls of the absorber in case of failure of the absorber spray system or the GGH. The dampers shall have provision for manual operation, through a hand wheel. The force required for manual operation of the gate shall not exceed 35 kg (max.) at the rim of the hand wheel.

3.03.10 The isolating gates shall be provided with locking devices to permit locking in fully closed position.

4.00.00 BOOSTER FAN:

4.01.00 The Booster Fans shall be located downstream of the ID Fans (Induced Draft Fans) in the inlet duct to Absorber shall be capable of handling the pressure drop in the FGD system & ducting and wet stack of 150 m height also considering the exit loss from wet stackover the entire load range with any one or both Booster fans in operation in conjunction with one or both ID fan in operation while firing the specified range of fuels. Additionally a pressure loss of 100 mm wcl (excluding margin) shall be built up in booster fan design criteria as mentioned below to take care of pressure loss due to future installation of De-Nox system.

Booster Fans shall be sized such that they satisfy the criteria stipulated below.

4.01.01

S.N.	Description	Booster Fan
1	Type of fans	Constant speed, axial type.
2	No. of fans per unit	Two
3	Fan sizing criteria with all the following conditions occurring together :	Booster Fan to be sized for one (1) Booster Fan stream in operation taking into account following factors occurring together:
(i)	Flue Gas Flow through fan	712 m^3/sec
(ii)	Power supply frequency	47.5 Hz
(iii)	Pressure at Booster Fan suction	0 mmWc
(iv)	Gas temperature (degree Celsius)	150

4.01.02 The fans shall also fulfill following sizing criteria in addition to those mentioned at clause 4.01.01 above — Each fan to be sized with following conditions occurring together.

(i)	No. of fans in operation	2
(ii)	Flue gas flow through each fan	600 m^3/sec
(iii)	Margin over flow	20%
(iv)	Margin over pressure requirement	44% over the calculated value
(v)	Power supply frequency	50 Hz
(vi)	Pressure at Booster Fan suction	0 mmWc
(vii)	Gas temperature (degree Celsius)	150
(viii)	Flue gas control	Blade pitch control

Note to 4.01.01 & 4.01.02: Booster fan shall have a minimum stall margin of 10% over the Design duty points.

4.02.00 Both fans shall operate with highest possible efficiency which shall be nearly equal at the Guarantee point flow and test block points.

4.03.00 Fan components along with servo/blade pitch control mechanism shall be designed to withstand and continuously operate with the maximum air or flue gas temperature that these fans will be required to handle. Fan component shall also be designed to withstand the excursions in flue gas temperature up to 300 degree Celsius, which may persist for about 30 minute duration. Such temperature excursion will not inhibit the safe and smooth operation of fans or cause any damage or increased maintenance.

4.04.00 The construction of Booster fans shall also comply with following requirements

DESCRIPTION	Booster Fans
Type of fan blades	stream lined, aerofoil shaped section
Blade material	Nodular Cast Iron or High Wear Resistant Steel with or without Hard coating as per the proven practice of the fan manufacturer
Fan rotational speed	600 rpm (max.)
Air/Flue gas flow	blade pitch control
Fan critical speed	not less than 125% of fan maximum operating speed
Fan component design*	to withstand torsional stresses three (3) times the normal full load motor torque at all speeds
Fan casing material thickness	Abrasion and wear resistant, high BHN steel having minimum 8.0mm thickness or 12mm mild steel with liner of thickness 10mm (min.)
Fan Housing design	for shut off head of fan

*Note :

(a) Contractor shall submit detailed calculations, for Employer's approval, to confirm compliance with above requirements for all fan components, specifically for fan shafts, impeller hubs and impeller as a whole. Areas of high stress concentration and residual stresses, like welded attachments shall be avoided on the fan rotor/shafts. Combined static, dynamic as well as residual stresses shall be demonstrated to be within allowable limits. These fan components shall last the life of the plant with such combined stresses present in them.

(b) Although employer envisages to install highly efficient electrostatic precipitator to control particulate emission, however. Bidder shall select the Booster fan components such as blades, hubs, casing etc. to encounter the high dust burden of the order of 250 mg/Nm^3. The minimum wear life of Booster fan components shall not be less than 25000 hours of operation from the date of commissioning.

4.05.00 **Fan Bearings**

(a) Bearing shall be provided with oil bath to prevent damage in case of complete loss of plant auxiliary power when the fans must coast down

without power.

(b) Size oil reservoir in bearings housing for maintaining lubrication for extended periods in case of oil circulation system is out of service.

(c) Cooling air circulation to be provided across main bearing

(d) Adequate numbers of duplex Pt-RTD (100 ohm at 0 degree Celsius) and temperature indicator shall be provided for each bearing. Local as well as remote monitoring features shall be provided.

(e) For mounting of vibration pads/pickups, flat surfaces shall be provided both in X and Y directions, by the Contractor on the bearing housing.

4.06.00 **Fan balancing**

(a) The fans shall be statically and dynamically balanced before shipment.

(b) Balancing of each fan shall be checked and adjusted at site, if necessary.

(c) Natural frequency of all fan components shall be established by vibration testing to ensure that no part of the wheel is adversely excited by any force generated at operating speeds.

(d) The fan blade shall be subjected to natural frequency test. The other components of fan wheels need not be subjected to natural frequency test if supplier can prove that these component are very rigid and have very high natural frequency compared to the operating frequency of respective fans giving justification.

4.07.00 Booster fans shall meet following operational requirements.

	Description	**Booster Fans**
(a)	Mode of operation	i) two fans in parallel. ii) one fan (one stream in operation)
(b)	Fan control system	i) capable of operating in automatic mode for all regimes of operation in a steady and stable manner ii) The final control element shall not have any backlash, plays etc., and shall operate in the range of 20% to 80% depending upon generating loads upto Boiler MCR

	(c) Vibration	For mounting of vibration pads/pickups (in the Employer's scope) flat surfaces shall be provided, both in X & Y directions, by the Contractor on the bearing housing in such a way,so that welding/screwing of the pads shall be possible.
	(d) Bearing metal temperature monitoring	Shall be possible from remote as well as locally, using atleast 2 nos. of duplex platinum RTD's (100 ohms at0 deg. C) per bearing

4.08.00 The fans shall be suitable for parallel operation and sharing the load capacity over the entire range of operation without hunting. Pulsation shall be avoided by suitable design of fans and

4.09.00 **Fan Casing :**

(a) The fan casing shall be split to provide easy removal of the fan hub/impeller for replacement and repairs.

(b) The sections shall have gasket joints to ensure airtight sealing.

(c) Access doors shall be provided in each suction chamber casing and diffuser.

4.10.00 **Drain Connection:**

Drain connections shall be provided at bottom most point of the fan housing to the nearest trench.

5.00.00 ABSORBER

The unit shall be provided with an independent/dedicated absorber.

5.01.00 The contractor may offer either a spray type absorber, with single or multiple levels of spray, or an absorber with gas bubbling through the slurry, as per Bidders/Colaborator's proven practice. Only proven system in successful operation in previous installations supplied by the contractor shall be offered.

A Spray System (if offered)

(i) The contractor shall provide spray system and minimum spray levels required to meet the stipulated guarantee and design requirement. The spray system (including slurry recirculation pump & nozzles) shall be sized to achieve a desired L/G ratio required to meet the guarantees SO_2 removal efficiency, with redundancies specified under this clause.

(ii) In case the contractor offers an absorber with multiple levels of spray nozzles, each spray level shall be provided with independent 2x100% pumps. Alternatively, the contractor may offer a spare spray level with each spray level served by an independent 100% capacity pump. In case the contractor offers a single level of spray, one number of standby pump of the same capacity & head as the working slurry recirculation pumps shall be provided. The contractor shall provide spray system / spray levels only as per his proven practice, which should be in successful operation elsewhere.

(iii) The slurry recirculation pumps shall have a minimum margin of 10% of flow and head, over the actual requirement for meeting the guarantee and design point conditions. All slurry recirculation pumps including motors shall be of the same size and type.

(iv) The slurry recirculation pumps shall have motor driven knife gate valve at pump suction and discharge side.

(v) The slurry recirculation pumps shall be wear-resistant and equipped with flushing devices to prevent sedimentation and shall be designed and installed in a manner to allow easy replacements, repair and maintenance. The slurry recirculation pumps shall be equipped with oil level indication, coupling guard and collecting equipment for leakage, made of resistant material. Single mechanical seals with automatic flushing with a connection for additional manual flushing shall be provided.

(iv) The slurry pumps shall also comply with the requirements stipulated in Clause 9.00.00 of this sub-section.

(v) Sufficient redundancy, as per the proven practice of the contractor, shall be provided in the spray nozzles. Minimum 10% spare nozzles shall be provided at each level.

B Bubbling Type Absorber

(i) In case the bidder offers an absorber with gas bubbling through the slurry, the complete gas distribution system to the slurry shall be in bidder's scope. No re-circulating pump and spray header and nozzles shall be required in such case. However, 2x 100% Cooling Pumps instead of Slurry Recirculation shall be provided. The spray headers & piping for cooling pump discharge shall be made of Alloy 59 or C276 and nozzles shall be made of Silicon Carbide or ceramic or equivalent having a minimum guaranteed life of 20,000 hrs. The Cooling Pumps shall be installed inside a building.

The sparger and gas riser tubes shall be made proven material which shall have a minimum life of 5 years.

Minimum 10% redundancy, shall be provided in the Sparger Tubes.

5.02.00 **Absorber Recirculation Tank**

Sufficient number of agitators, as per the proven practice of the contractor, shall be provided for thorough mixing of the re-circulating slurry. In case the Contractor's Absorber includes side entry agitators, the contractor shall offer and demonstrate mixing arrangement such that n-1 number of agitators are sufficient to avoid the slurry settlement in the absorber tank in case of one agitator under breakdown (n-total no. of working agitators). In case vertical absorber agitators are offered, one complete mechanical assembly of agitator shall be supplied as warehouse spare for each Absorber.

5.03.00 **Absorber Oxidation Systems**

5.03.01 The contractor may offer either a grid type oxidation system or a sparge jet oxidation system or lance type or air rotary sparge system or jet air sparger system for oxidation of sulfite sludge to sulfates, or any other proven system as per the practice of the FGD vendor.

5.03.02 The oxygen required for oxidation shall be supplied by 2x100% oxidation air compressors/blowers for each absorber. The compressor/blower shall be sized to supply at least 2.5 times the stoichiometric air requirement for spray tower process & at least 4.0 times the stoichiometric air requirement for Bubbling Type process or the actual requirement, whichever is higher, under the following condition, all occurring simultaneously. The natural oxidation of sulfite by residual oxygen in flue gas shall not be considered for this purpose.

Load	Design point Flow
Flow	Minimum 2.5 times for spray tower process & 4.0 for Bubbling Type process the stoichiometric requirement
Head	For spray tower process actual requirement considering choking/ blockage of minimum 10% of the oxidation nozzles / sprayers or minimum 8500 mmwc whichever is higher. For Bubbling Type process actual requirement considering choking/ blockage of minimum 10% of the oxidation nozzles / sprayers or minimum 3500 mmwc whichever is higher.
Margin on Head	10% under above conditions.

Ambient Conditions 45ºC / 60% RH.

5.03.03 Oxidation nozzles / spargers shall have a minimum redundancy of 10% or as per the contractor's proven practice whichever is maximum.

5.03.04 The oxidation system shall be complete with a quenching system to cool down heated oxidation air in order to prevent any scaling or buildup that could occur at the sparger tips due to localized evaporation of recycled slurry.

5.04.00 Gypsum Bleed Pump

Each absorber shall be provided with 2x100% Gypsum Bleed Pumps for supply of gypsum slurry to Gypsum Dewatering system. Each Gypsum bleed pump shall be sized to bleed-off the gypsum slurry from the absorber with slurry solid concentration not exceeding 30%, under the following conditions, all occurring simultaneously:

Load	Design point
Flow	100% of gypsum produced at Design point condition
Head	As per system requirement
Margins	Flow -- 15% Head – 20%

The pumps shall be designed to meet the stipulations of Clause No.9.00.00 of this Sub-Section.

Provision shall also be provide in the Gypsum Bleed Pumping system by provision of tap off, valves etc. for pumping the gypsum bleed to alternate source.

5.05.00 Emergency Spray System

An emergency cooling system for automatic spray of quenching water for a sufficient time (minimum 15 min) at the inlet to the absorber, in case the gas temperature exceeds the design temperature due to failure of upstream equipment's shall be provided to protect the FGD and all other sensitive downstream equipment against high flue gas temperatures. The water shall be supplied from an elevated tank (emergency water tank) installed near to the absorber. The tank volume and the injection lances/nozzles shall be designed to protect the inlet duct and the lining of the absorber. The inlet duct shall be sloped towards the absorber.

5.06.00 Design

5.06.01 The design and arrangement of the absorber shall be field proven for successful long-term operation in conjunction with a coal fired power plant.

5.06.02	The design of flue gas ducts and inlet and outlet hoods of the FGD as well as guide vanes and baffle plates shall ensure a homogeneous flue gas flow with respect to the distributions of: (i) temperature (ii) velocity (iii) dust content (iv) slurry injection and distribution. The above shall be proven by two phase Computational Fluid Dynamics simulations (liquid and gas). The scope of modelling shall include flue gas path inside the absorber vessel including inlet and outlet duct. Homogeneity shall be ensured, if the deviation from average is less than $\pm$10%. Further, in the Absorber outlet hood no internals such as guide vanes and baffle plates shall be allowed.
5.06.03	The fabrication of the absorber vessel shall follow common practice as there shall be no longitudinal seams located behind any attachment or obstruction which would prevent inspection of the welds. Nozzles, access ways, and their reinforcements shall not be located in or on any seam. Inaccessible gaps or hollow beams shall be avoided.
5.06.04	The absorber shell shall be designed for pressure loads, piping forces and moments, wind and seismic loads and all other loads imposed on the absorber. Bracing and reinforcement shall be adequate to prevent deflection and vibration. Internal supports for mist eliminator sections, etc. shall be designed to withstand the flooded weight of the supported section. The absorber and its structural supports shall be designed for the maximum operating loads including design positive & negative internal pressure, static head, external attachment loads (such as exerted by piping) wind load using the allowable stresses permitted by the applied standards.
5.06.05	It shall be possible to reach the SO_2 emission guarantees, at Guarantee point condition, with at least one spray level continuously out of service (in case the absorber is equipped with several spray levels) or one spare pump continuously out of service.
5.06.06	Three stage chevron type Mist Eliminators (ME) made of polysulfone or stainless steel shall be provided at the exit of the absorber. Provision shall be made for continuous washing of both ends of the first & second stage and the front section of the third stage of mist eliminators. Wash water arrangement shall also be provided at the back end of the second stage of mist eliminator. If the mist eliminator washing system is designed for cyclic washing of different sections, all the valves required for cycling shall be motorized or pneumatically operated. The automatic valve for the spray system shall be easily accessible on a platforms close to the mist eliminator. Entrained slurry shall be collected by mist eliminators downstream of the slurry spray system to avoid carry-over of slurry to the stack. The ME system shall be equipped with washing and drain provisions, where drains are directed into the absorber. Washing provisions shall include external and internal piping systems with replaceable nozzles, water pressure booster pumps complete with all piping, valves, instrumentation and controls. The mist eliminator wash piping shall be constructed of rubber lined carbon steel or glass fiber reinforced plastics. The mist eliminator spray headers shall be made of FRP or rubber lined Carbon

	Steel, corrosions and erosion resistant in the inner and outer side (Silicon Carbide coating on metal/FRP surface exposed to slurry). Ease of replace ability and placement of the mist eliminator on maintenance platforms is an important requirement. The ME shall be designed to allow for efficient cleaning in process. Test ports shall be provided downstream of the mist eliminator to enable performance testing. The mist eliminator system shall be capable of withstanding high velocity spray water jets typically employed during manual cleanings. The ME shall be constructed in individual cells. The design shall safely avoid ME vibration and/or humming. The individual cells shall be sized so that no more than two maintenance personnel are needed to handle them manually when they are fully scaled or plugged, and the cells shall be capable of passing through the access doors for the mist elimination section. Easy access for placement and replacement of the mist eliminator shall be incorporated in the design of the mist eliminator arrangement and the absorber vessel. Walkways shall be arranged and also measures shall be taken as appropriate to permit the internal components to be disassembled and reassembled during repairs without the necessity for time-consuming preparatory work. The headroom shall have a height of more than 2200 mm. The mist eliminator support beams shall be designed to act as maintenance walkways approximately 300 mm wide and shall allow for a minimum 500 Kg/m2 load. The support beam/walkways shall provide personnel access to all mist eliminator modules, wash headers and wash nozzles. Adequate number of viewing ports with flushing devices connected to automatically operating washing system shall be delivered at following locations: (i) upstream of 1st stage (ii) between 1st and 2nd stage (iii) downstream of 2nd stage. (iv) downstream of 3rd stage The regular flushing shall be done in a defined time sequence.
5.06.07	The absorber oxidation tank shall be provided with an over flow line (**for spray tower process)** complete with sealing pot, over flow and drain line. The absorber over flow shall be taken to a sump in the absorber region, from where the slurry shall be pumped back to the absorber by a sump pump.
5.06.08	Materials used shall be suitable for the chemistry of the absorber process and resist abrasion from any particulate contained in the incoming flue gas and from the particulate of desulphurization process.
5.06.09	All equipment located in the gas path or connected to such equipment shall be designed to withstand the maximum inlet gas temperature fluctuations. There shall be no damage whatsoever to any equipment as a result of these fluctuations.
5.06.10	The raw gas inlet duct of the absorber shall be equipped with a flushing device of the side walls and the ground, which shall operate continuously as well as intermittently.

5.06.11	The absorber vessel shall be made of minimum 7 mm thick carbon steel. The absorber oxidation tank, absorber tower & absorber outlet duct shall be provided with 2 mm (minimum) thickness lining / cladding / wall paper of Alloy C276 / Alloy 59 or better material.
5.06.12	The material of process equipments of flue gas desulphurization system shall be appropriate for the chloride content and pH level at which the process is to operate.
5.06.13	All internal members shall be lined with minimum 2 mm Alloy 59/ C276 . All metallic fasteners which are provided inside the absorber/absorber wet-dry interface ducting shall be of Alloy 59/ C276.
5.06.14	The absorber wet-dry interface shall be made of solid Alloy 59 or C276 of minimum 6 mm thickness.
5.06.15	The other bridges (supports) shall be lined with minimum 2 mm Alloy 59/ C276.
5.06.16	Lining material and technical application requirements shall be furnished by manufacturer experienced with similar FGD plants. Proof of such experience shall be provided by the Contractor.
5.06.17	The spray headers (if provided) and air supply headers shall be made of FRP or Carbon Steel with rubber lining (minimum 10 mm natural rubber lining), corrosions and erosion resistant in the inner and outer side (Silicon Carbide coating on metal/FRP surface exposed to slurry). Optionally ceramic coating is also acceptable provided bidder has proven experience for the same. The slurry spraying system shall be made of material resistant to erosion and corrosion. During the lifetime of the plant, only the nozzles shall be replaced. The distribution system of the slurry shall be hydraulically optimized. The spray nozzles shall be of silicon carbide or ceramic or equivalent having a minimum guaranteed life of 20,000 hrs. The design of the spray nozzles shall be such that rapid wear, encrustation and plugging are avoided. Nozzle pipes and slurry spray nozzles shall be with bolted flanged connections. Nozzle pipes shall be installed easily to be removed partially through absorber modules.
5.06.18	In case the absorber is equipped with several spray levels they shall be designed as follows: (i) The last spray level upstream the mist eliminator shall be operated only in counter-flow. (ii) Depositions at downstream spray level and mist eliminator by co-flow injection of slurry shall be avoided. (iii) The spray lances shall be equipped with bars for installation of scaffolding without any offset. The spray levels shall be designed for a load of min. 500 kgf/m^2. (iv) A flushing device of the spray levels with water shall be installed. Flushing shall take place if spray levels are out of operation.

5.06.19	The absorber shall be self-supported from the bottom to suit site conditions. Absorbers which are externally supported from the structure are also acceptable provided Bidder or its Technology Collaborator has proven experience of supplying such Absorbers which are operating for more than 5 years. The absorber shall have adequate stiffening arrangement on the external side. Internal stiffeners shall be used only where it is not possible to provide proper external stiffening with approval of employer.
5.06.20	It should be possible to build platforms inside the absorber for access to all parts of the absorber during maintenance. In case the contractor offers a multiple spray level design, minimum distance of 1.5 m shall be maintained between individual spray levels. Arrangement shall be properly designed to facilitate access for maintenance and replacement of spray nozzles.
5.06.21	The spray piping, mist eliminators and its supporting structure shall be designed to carry sufficient load during maintenance.
5.06.22	The bottom of the absorber sump shall be designed so that there will be an easy entrance for a man with a wheelbarrow. Therefore the arrangement and dimensions of the inspection door of the absorber at ground level shall be designed to allow for this. The bottom of the absorber sump shall be designed in such a way that complete drainage of the absorption liquid/slurry is possible and is accessible without damage of lining/rubber.
5.06.23	In case of Spray Tower System, Suction screens shall be installed inside the Absorber vessel to protect the Slurry recirculation pumps. In case Bubbling type, suction strainers shall be installed at the suction line side of Gas Cooling Pumps. For the agitators a flushing system for start ups shall be provided.
5.06.24	It should be possible to discharge the absorber sump into the emergency drain tank within 2 hours.
5.06.25	At the head of the absorber two manholes shall be provided to reduce the draught of the stack during outage.
5.06.26	Equipment's required for internal & external inspection shall be furnished by the contractor in brand new condition. List of all such items shall be furnished along with the Bid. The formation of agglomeration, deposition & caking shall be avoided. For areas, where this might occur, (e.g. mist eliminators, spray levels) the Contractor shall submit a cleaning procedure including the required safety measures as part of the inspection concept.
6.00.00	**LIMESTONE GRINDING AND SLURRY PREPARATION SYSTEM**
6.01.00	**Type** A common limestone and slurry preparation system is envisaged for 3 x 660 MW units. Contractor shall supply wet limestone grinding and slurry preparation system complete with all auxiliaries and slurry storage tank of proven design.

6.02.00	**Limestone Silo:**
6.02.01	The Contractor shall provide 2X100% Limestone storage silos each silo having minimum 24 hours storage capacity equivalent to the requirements of FGD system of 3X660 MW at Design point. The storage silo shall be complete with supporting steel structure, platforms, staircase, air canons power operated gates, gravimetric feeders, level switches, air relief devices, etc..
6.02.02	The storage silos and hopper cones shall be fabricated of minimum 10 mm thick carbon steel with a SS lining of grade SS304 of minimum 4 mm thickness in the complete cones to ensure reliable discharge of material. The design of storage silos shall confirm to IS 9178 (Part 1 to 3). The storage silo shall be capable of feeding the limestone by means of gravimetric feeder to the wet ball mills. The top of the unloading hopper shall be equipped with a grate to protect the downstream equipment from gravel lumps or tramp waste.
6.02.03	Each Silo shall be provided with sufficient no. of level transmitters.
6.02.04	Each silo shall be provided with minimum 3nos. of air canons at necessary location, capable of removing the jamming/clogging/blockage in the silos.
6.02.05	For dust free operation each silo should be provided with a covering arrangement and a self cleaning bag filter system of suitable capacity containing blower, automatic/on-load cleaning system, etc.
6.02.06	For each silo facilities shall be provided for unloading the bunker, through feeder, to a truck at ground level, along with all necessary chutes and diversion chutes.
6.02.07	Lime stone silo with hopper may be fabricated at factory in segments, transported and welded at site.
6.03.00	**Bunker Shut-off Gates**
6.03.01	A bunker outlet chute shall be provided for feeding limestone from bunker to the feeder. The size of the opening chute shall be sufficient to ensure proper flow of the limestone. There shall be no reduction of section in the bunker outlet chute from bunker to feeder. The inlet chute shall be provided with suitable poke doors/holes in order to remove jamming/blockage. A motorized bunker shut-off gate shall be provided at the inlet to each feeder.
6.03.02	All parts of the gate in contact with limestone shall be of stainless steel construction.
6.03.03	The shut-off gates and its actuator shall ensure 100% closing of the gate even with 'bunker full of limestone'.
6.03.04	Facility shall be provided to open/close the bunker outlet gate, through actuator, from remote as well as local.
6.03.05	In addition, a hand wheel with proper access shall also be provided for manual operation of the gate. The force at the rim of the hand wheel shall not exceed 35 kg

	with bunker full of coal.
6.03.06	For each bunker facilities shall be provided for unloading the bunker, through feeder, to a truck at ground level, along with all necessary chutes and diversion chutes.
6.04.00	**Gravimetric Feeders**
6.04.01	Gravimetric feeders shall be sized to meet 110% of the maximum mill capacity.
6.04.02	The limestone feeder belt shall be of seamless rubber construction. It should be possible to adjust the belt tension from outside without opening the feeder body.
6.04.03	All parts in contact with limestone except belt shall be of stainless steel construction.
6.04.04	The feeder shall have adequate instrumentation to detect `loss of flow'.
6.04.05	The feeder shall have a motor/pneumatic operated gate at the outlet.
6.05.00	**Wet Ball Mill**
6.05.01	There shall be 2X100% tube mills for grinding of limestone. Each mill shall be sized to meet 110% of the maximum limestone requirement of 3x660 MW units under the following conditions, all occurring together.

	(i) Load	Design point flow
	(ii) Flow	110% of limestone requirement of two absorbers at Design point
	(iii) Input Limestone Size	1" (max.)
	(iv) Output Fineness	Output Fineness 90% or higher (as per the requirement of absorber) through 325 mesh (for spray tower process) OR 90% or higher (as per the requirement of the absorber) through 200 mesh (for bubbling process)
	(v) Mill Wear Part Conditions	Near Guaranteed Wear Part Life.
	(vi) Limestone bond index (kWh/sh.T)	13 (min)
6.05.02	All integral auxiliaries of the mills like hydro-cyclones, separator tank & mill circuit pumps shall be sized to meet the above conditions. A 100% stand-by pump shall be provided for the mill circuit pump.	
6.05.03	The mill hydro-cyclone set shall have sufficient redundancy. A minimum 10% spare hydro-cyclone shall be provided in each set of hydro-cyclone. Hydro-cyclones shall be of modular construction. It shall be possible to remove and replace individual	

	hydro-cyclone with the set in service. Individual isolation valve shall be provided for each hydro-cyclone for this purpose. The hydro-cyclone shall be of proven design and shall be provided with replaceable rubber lining. The hydro-cyclone shall be provided with replaceable rubber lining of thickness 12 mm for the feed chamber and 12 mm for the overflow launder.. The liners shall have a minimum wear life of not less than 7000 hrs.
6.05.04	All parts of the mill including mill body, trunnion, hydro-cyclones, integral pipes, mill circuit pumps and other parts in contact with limestone slurry shall be provided with replaceable rubber wear liners. The wear liners or wear parts shall have a minimum guaranteed wear life of not less than 8000 hrs without reversal of the liners. The guaranteed capacity and fineness of the mill shall not be affected within the guaranteed life of the mil wear parts.
6.05.05	The material of the balls shall be chosen to ensure that the balls do not lose their original shape and to ensure minimum ball consumption. The contractor shall also guarantee ball consumption per ton of limestone throughput. The contractor shall furnish the minimum ball diameter below which the balls shall be replaced.
6.05.06	Facility shall be provided for on-load loading of steel balls to the mill.
6.05.07	The ball mill shall be driven by a motor through a peripheral gear. An auxiliary motor shall also be provided for inching of mills after trip and during maintenance.
6.05.08	The lube oil system shall have 100% stand-by arrangement for lube oil pumps and oil coolers of each circuit with independent pump / cooler. Wherever required duplex oil filters shall be provided.
6.05.09	The mill auxiliaries like separator tanks, mill circuit pump, hydro-cyclones and all connecting pipes handling limestone slurry shall have replaceable rubber linings.
6.06.00	**Limestone Slurry Preparation / Storage Tank**
6.06.01	The contractor shall provide two (2 nos.) slurry storage tank, common for all mills. Each tank shall be sized to meet 12 hours continuous limestone requirement of the two units operating at Design point. For tank volume calculation, solid concentration (by weight) in the slurry shall be assumed, not more than 20% or actual required whichever is lower.
6.06.02	The storage tanks shall be equipped with sufficient number of agitators, to avoid settling of limestone, as per the proven practice of the supplier. The agitators shall be designed to meet the requirements stipulated in Cl. No. 12.00.00 of this Sub-Section.
6.06.03	The limestone mill circulation tanks shall be installed indoor beneath the hydro cyclone stations. The slurry storage tank shall be located outdoor.
6.06.04	The slurry preparation tank shall be CS construction with replaceable chlorobutyl/bromobutyl rubber lining of minimum 5 mm thickness.

6.07.00 Limestone Slurry Supply Pumps & Piping

6.07.01 2x100% centrifugal type limestone slurry pump shall be provided for each unit. Each limestone slurry pump shall be sized to supply the limestone requirement of one (1 no.) unit, under the following conditions all occurring together.

(i)	Load	Design point
(ii)	Flow	110% of one absorber requirement with the limestone requirement at Design point.
(iii)	Head	As per system requirement.
(iv)	Margins	Flow 10% (minimum) Heads 15% (minimum)
(v)	Solids Concentration	Max. 30% by weight or actual as per suppliers practice, whichever is minimum.

6.07.02 The limestone slurry pumps shall be designed to meet the requirements stipulated in Cl. No.9.00.00. of this Sub-Section.

6.07.03 The limestone slurry pipes shall be sized to minimize erosion and avoid settling of the limestone at part load operation. The slurry pipes shall be lined with replaceable wear resistant natural rubber lining of minimum 10 mm thickness. Additional thickness of 2 mm in rubber lining shall be provided at bends.

6.07.04 Automatic flushing equipment for all lime slurry pumps and pipes shall be supplied.

7.00.00 GYPSUM DEWATERING SYSTEM

7.01.00 A common gypsum dewatering system for 3 x 660 MW units is envisaged. Contractor shall supply a two stage gypsum dewatering system, consisting of a primary stage of sets of hydro-cyclones and secondary stage of vacuum belt filters for dewatering of gypsum from absorber up to less than 10% moisture. All the equipments supplied shall be proven design with previous installations for similar capacities.

7.02.00 The Contractor shall provide 2x100% gypsum dewatering system with each stream sized to dewater 110% of the maximum gypsum produced by 3 X 660 MW units operating at Design point. All other stipulations with respect to sizing and design of the dewatering system, auxiliaries and other systems shall be in line with this specification.

7.03.00 Primary Dewatering Hydro-cyclones

7.03.01 Each set of primary dewatering hydro-cyclone shall be sized to dewater the gypsum slurry produced by the unit operating at Design point with an additional 10% margin. The outlet water content in the gypsum shall be as per the requirement of the

	vacuum belt filters.
7.03.02	Each set of primary hydro-cyclone shall be provided with 10% spare hydro-cyclones. The capacity defined in the previous clause shall be met with spare hydro-cyclones out of service.
7.03.03	The primary hydro-cyclone shall be installed directly above the belt filters. The overflow of the hydro-cyclones shall be taken to Hydro-cyclone Waste Water tank via secondary hydro-cyclone feed tank and secondary waste water hydrocyclone as shown in the relevant tender drawing.
7.03.04	Hydro-cyclones shall be of modular construction. It shall be possible to remove and replace individual hydro-cyclone with the set in service. Individual isolation valve shall be provided for each hydro-cyclone for this purpose.
7.03.05	The hydro-cyclone shall be of proven design and shall be provided with replaceable rubber lining. The feed chamber shall be provided with a minimum lining thickness of 25mm. The liners shall have a minimum wear life of not less than 7000 hrs.
7.04.00	**Vacuum Belt Filters**
7.04.01	Each vacuum belt filter shall be sized to meet the following requirements, all occurring together, with an inlet solid concentration of not more than 45% or outlet of hydro-cyclones whichever is minimum: a. Capcity — 110% of gypsum produced by 3x660 MW Absorbers at Design point. b. Outlet Moisture — 10% max. c. Gypsum Purity — 90% (minimum) d. Chloride content — < 100 ppm
7.04.02	The vacuum belt filter shall be proven design in operation for similar capacities. The filter cloth shall be polyester or polypropylene as per the proven design of the supplier and shall be guaranteed for a minimum life of not less than 7000 hrs.
7.04.03	The complete frame of the filter and all parts in contact with gypsum shall be made of corrosion resistant material or shall be provided with corrosion resistant liners of proven design.
7.04.04	In case, the contractor offers a design with an underlying belt for carrying the filter cloth, the same shall be endless, factory vulcanized rubber belts. The belt shrouds and the sealing belts shall provide a leak tight arrangement to prevent overflow of gypsum slurry. The sealing belt shall have minimum life of not less than 7000 hrs.
7.04.05	The vacuum box shall ensure tight sealing with the belt/cloth and shall be of proven design.

7.04.06	The belt filter shall have an automatic cloth tracking mechanism and shall be provided with all required instrumentation as per the supplier's proven practice. The belt filter shall have an automatic cloth tensioning mechanism.
7.04.07	The filter shall be provided with minimum 2 stages of cake washing for removing impurities in the gypsum. One stage of cloth washing arrangement shall also be provided.
7.04.08	The filtrate from gypsum slurry and from cake washing shall be taken to a common or separate vacuum receiver tank(s) as per the proven practice of the supplier. Each belt filter shall have an independent vacuum pump.
7.04.09	Gypsum cake from each belt filter shall be discharged through a hopper onto belt conveyor being provided by the Employer. The elevation of discharge point of vacuum belt filter shall be at least 10.0 m above GL.
7.04.10	A 2 m (min.) wide platform shall be provided around each belt filter for easy approach & maintenance. Handling facilities for replacement of heavy components of the belt shall also be provided.
7.05.00	**Vacuum System**
7.05.01	The filtrate from each belt filter, cake washing & cloth washing shall be taken to a common or separate receiver tank(s) as per the supplier's proven practice.
7.05.02	Each belt filter shall be provided with an independent vacuum pump sized to meet the requirements of the belt filter operating at its maximum capacity. An additional margin of 10% (min.) over the above capacity shall be provided for each vacuum pump.
7.05.03	The vacuum pump shall be of low speed liquid ring type of proven design. The design of the vacuum pumps shall avoid cavitations under all operating conditions. The seals shall be of proven design.
7.05.04	Silencers shall be provided, if required, to limit the noise level to values stipulated elsewhere in this specification.
7.05.05	The vacuum receiver and pump internals shall be suitably lined to protect against the corrosive environment. The material selected for vacuum pumps & vacuum receivers shall be proven for similar application.
7.05.06	Each vacuum receiver tank(s) shall be provided with slide plate type pneumatic vacuum breaker. The plate shall be stainless steel with a min. thickness of 3 mm.
7.06.00	**Filtrate System**
7.06.01	Water from vacuum receiver tank(s) and the secondary waste water hydrocyclone underflow shall be taken to a common filtrate tank for recirculation to the absorber tanks.

7.06.02	2x100% horizontal centrifugal pumps shall be provided for recirculation of filtrate water to absorber. 2x100% horizontal centrifugal pumps shall be provided for wash water requirements of belt filter. Alternatively, wash water pump may take suction from the vacuums receiver tanks. Each pump shall be provided with 100% standby in such a case.
7.06.03	The pump shall be capable of pumping of filtrate water with solid concentration of not less than 10% & particle lumps of 6-7mm. A 10% margin shall be provided in each of the pump.
7.07.00	**Waste Water System**
7.07.01	The overflow of the primary hydro-cyclones shall be taken to a secondary hydrocyclone feed tank for feeding the secondary waste water hydro-cyclones.
7.07.02	The secondary hydrocyclone feed tank shall be sized to provide a minimum storage of 1 hr of primary hydro-cyclone overflow with all the units operating at Design Point and no outflow from the tank.
7.07.03	2x100% horizontal centrifugal pumps shall be provided to feed the secondary hydro-cyclones. Each pump shall be sized to empty the full storage capacity of the tank in **6** hrs.
7.07.04	Each set of hydro-cyclone shall be sized to process the maximum discharge from the secondary hydro-cyclone feed pumps. A minimum 10% spare hydro-cyclones shall be provided in each set. Secondary Hydro-cyclones shall be of modular construction and of proven design. The secondary hydro-cyclone shall be made up of polyurethane or urethane materials. It shall be possible to remove and replace individual hydro-cyclone with the set in service. Individual isolation valve shall be provided for each hydro-cyclone for this purpose.
7.07.05	The secondary waste water underflow shall be taken to the adequately sized filtrate tank, while the overflow shall be taken to a waste water Tank.
7.07.06	1x100% Waste water tank shall be provided which shall be sized for 8 hrs storage of waste water with all the units operating at Design point and no out flow from the tank. The Waste water Tank shall be complete with Agitator, level transmitters etc. The waste water collection tank shall be of Steel construction with rubber lining. 2x100% horizontal centrifugal pumps shall be provided for pumping the waste water from waste water tank at required pressure to waste water terminal point as indicated in Sub-section IV, Part A, Section VI of the Technical Specification. The material of Casing and impeller shall be rubber lined Cast Iron (IS:210 Gr FG260). Shaft and Shaft Sleeves shall be Stainless Steel-410.
7.07.07	All piping, valves & instrumentation upto the employer's terminal point shall be in the contractor's scope. Contractor shall provide the complete lime dosing system to correct the pH of the waste water by lime (83% purity) dosing shall be provided and after mixing of the effluent (using re-circulation system of the pumping system), the effluent shall be discharged once the waste water has been neutralized to desired pH. A pH monitor shall be provided at the discharge of the pumps for measurement

	and control. Complete lime storage, feeding & dosing system shall be in contractor scope. The complete waste water neutralization system shall be automated and controlled from the control room.
7.07.08	Contractor shall provide 2x 100% Lime Neutralization tanks which shall be of minimum 8 hr capacity made of carbon steel with rubber lining along with 2x100% Lime storage silos. The tanks shall be provided with SS dissolving basket, Agitator of SS construction, drain, over flow and dosing connection, level transmitters, Agitators etc. The storage silos and hopper cones shall be fabricated of minimum 10 mm thick carbon steel with a SS lining of grade SS304 of minimum 4 mm thickness in the complete cones to ensure reliable discharge of material. The design of storage silos shall confirm to IS 9178 or any other proven international standards. The storage silo shall be capable of feeding the lime by motorized rotary feeding system to the Lime Neutralization tank.
7.07.09	Contractor shall provide 2x 100% Lime Storage Silos for feeding lime to the Lime Neutralization tanks. The lime storage silo shall be of minimum 24 hr capacity equivalent to the requirements of FGD system of 3X660 MW at Design point and shall be complete with supporting steel structure, platforms, power operated outlet gates, level switches, air relief devices, etc.. For dust free operation each silo should be provided with a covering arrangement and a self cleaning bag filter system of suitable capacity containing blower, automatic/on-load cleaning system, etc.
7.07.10	Bucket conveyors shall be provided by the contractor to feed lime to each of the lime storage silos from ground level. The Bucket conveyors shall be sized to completely feed each lime silo within 2hrs. Adequate storage and feeding system required for feeding the lime to the Bucket conveyors is also in the Contractor's scope.
7.07.11	A storage room for storing minimum one (1) month requirement of lime for all the units shall also be provided by the contractor.
7.08.00	**Auxiliary Absorbent Tank**
7.08.01	The Contractor shall provide an auxiliary absorbent tank, for the unit, sized to contain the complete slurry of one absorber tank at its maximum level equipped with all necessary pumps, valves, piping and controls to transfer the tank's contents back to the absorber to refill the absorber sump It should be possible to discharge the each absorber into the emergency drain tank within 2 hours.
7.08.02	The contractor shall provide 2 x100% pump to pump back the slurry from the sump back to the absorber in a maximum time of 8 hours.
7.08.03	Agitation shall be provided to prevent settlement of slurry by side entry agitators with emergency flush start system. Sufficient number of agitators shall be provided in the tank by the contractor to prevent the solids from settling down.
7.08.04	The Auxiliary Absorbent tank shall be made of minimum 7 mm thick carbon steel with minimum 4 mm thick rubber lining of best quality bromine butyl rubber and shall also be equipped with all necessary pumps, valves, piping and controls to transfer the tank's contents back to the absorber.

7.08.05	The Auxiliary Absorbent tank shall be equipped with an opening to enable easy entry of a man with wheelbarrow.
7.08.06	Coarse-screen(s) of suitable material at suction-side of the pumps shall be provided.
8.00.00	**SLURRY PUMPS**
8.01.00	This Clause covers the design, manufacture and erection of all slurry pumps for the FGD system including the Absorber slurry recirculation pumps, Gypsum bleed pumps, Limestone slurry feed pumps, Mill circuit pumps and any other pump handling slurries.
8.02.00	The Contractor shall offer only proven design in successful operation in similar application at previous installations. The design, manufacture, installation and testing of the pumps shall follow the latest applicable Indian / International (ASME / EN / Japanese) Standards.
8.03.00	The pumps shall be designed for continuous operation. The pump shall be single stage centrifugal type capable of delivering the rated flow at rated head with margins as specified in the respective clauses. The slurry concentration in the pump shall not exceed 30% by weight except for Mill circuit slurry pumps for which the slurry concentration in the pump shall not exceed 55% by weight.
8.04.00	All the slurry pumps shall be provided with motorized suction and discharge valves. In addition, flushing water lines with motorized valves shall be provided for each pump for automatic flushing of the pump after each shut down. The flushing water for the pumps shall be taken form the process water supply
8.05.00	The pump casing should be radially split to allow easy removal of impeller.
8.06.00	All the pump wear parts in contact with the slurry shall be provided with replaceable rubber/elastomer liners suitable for the fluid handled. The Bidder can also offer an hi chrome alloy line pump if the Bidder has previous experience of the same for similar applications. The material used by the contractor shall be proven in previous installations.
8.07.00	For absorber recirculation service a Silicon carbide impeller and SiC lining for casing can also be accepted if the manufacturer has supplied a similar pump for a previous installation for similar service.
8.08.00	The material and thickness of the liners shall ensure a minimum service life of 2 years before replacement. All the wear parts of the pump shall be guaranteed for a minimum wear life of not less than 14000 hrs.
8.09.00	The design of the shaft shall ensure that the operating speed is at least 20% above the critical speed of the shaft.

9.10.00	The pump shall be provided with seals of proven type and shall be designed for minimization of seal water consumption. The shaft shall be supported on heavy duty ball/roller bearings.
9.00.00	**VERTICAL SUMP PUMPS**
9.01.00	Contractor shall provide sumps of adequate capacity in the each absorber area, limestone grinding area and gypsum dewatering area for containing the over flow from the respective systems. Contractor shall make arrangements for pumping the drainage water back to the respective system with vertical sump pumps. Agitators shall also be provided to avoid settling of solids in the sump. Adequate redundancy in line with the standard practice adopted by the bidder shall be provided. This Clause covers the design, manufacture and erection of all vertical sump pumps for the FGD system.
9.02.00	The contractor shall offer only proven design in successful operation in similar application at previous installations. The design, manufacture, installation and testing of the pumps shall follow the latest applicable Indian / International (ASME / EN / Japanese) Standards.
9.03.00	The pumps shall be designed for continuous operation. The pump shall be single stage centrifugal type with semi open or open impeller. The pump impeller shall be cantilever type and shall not be supported below the base plate for easy withdrawal.
9.04.00	The pump shall deliver the rated flow at rated head with margins as specified in the respective clauses. The pump shall be capable of pumping of filtrate water with solid concentration upto 10% & particle lumps of 6-7mm. Sump pumps handling slurry shall be designed with a maximum concentration of 30% solid by weight.
9.05.00	The material chosen for the pump components shall be suitable for the fluid handled and shall be proven in similar application.
9.06.00	The pumps shall not be supported below the base plate level for easy withdrawal without entering the sump.
10.00.00	**SLURRY & PROCESS WATER TANKS**
10.01.00	All the slurry tanks (Slurry Tanks, Filtrate Tank, Secondary hydro cyclone feed tank, vacuum receiver tank, Waste water Tank, Lime Neutralization tanks etc.) shall be designed, fabricated, erected and tested in accordance with the IS:803, latest edition. Additional Corrosion allowance of 3mm on the minimum tank shell thickness as calculated by IS:803, latest edition shall be provided by the Contractor. Tanks shall be made from IS:2062 quality mild steel plates of tested quality. The tanks shall be of welded construction. Interior surface of the tanks shall lined with replacable chlorobuty/bromobutyl rubber lining of minimum 5 mm thickness and the outside surface shall be coated with paint as approved by the Employer. The Tanks shall be provided with drain, manholes, over flow & inlet level control valves etc. Coarse-screen(s) at suction-side of these pumps shall be provided.

CLAUSE NO.	TECHNICAL REQUIREMENTS
11.00.00	**AGITATORS**
11.01.00	Agitators shall be supplied in tanks and vessels to prevent caking and settlement of particles out of the slurry, e.g. in the absorber vessel, limestone mill recycle tanks, limestone slurry tank, Auxiliary Absorbent tank, and sumps etc.
11.02.00	All agitators shall be designed for continuous operation unless otherwise specified. Horizontal agitators shall be used for Absorber. Vertical agitators can also be used for Absorber, if it is only the standard & proven practice of the Contractor for the offered Absorber design. In other vessels and tanks vertical agitators are also acceptable if they are of proven make and the Bidders standard practice which can be proven by means of suitable references. The design of the agitators shall be of proven type.
11.03.00	Standard type agitators with suitable characteristics shall be used wherever practical. The agitators shall be complete with motor, gearbox, agitator shaft, coupling, safety guards, mechanical seal (for side entry agitators), impeller, support legs, agitator mounting flange including bolts nuts and gasket etc.
11.04.00	All agitator parts and accessories in contact with the stirred fluid shall be constructed of materials specifically designed for the conditions and nature of the stirred fluid and be resistant to erosion and corrosion.
11.05.00	The material for the shaft (which is continuously in contact with slurry) and agitator blades of the Absorber Agitators shall be made with Alloy 926 or better material. For Agitators in other tanks, agitator blades shall be made with Alloy 926 or better material & shaft can be rubber lined. This does not release the Contractor of the responsibility for selecting the correct materials.
11.06.00	Each agitator and its associated equipment shall be arranged in such a manner as to permit easy access for operation, maintenance and agitator removal without interrupting plant operation. It shall be possible to remove the sealing devices of the Agitators of the absorber vessel without having to drain completely the absorber.
11.07.00	To prevent mechanical blocking load start-up after standstill of pumps, piping and agitators for slurries shall be applied with C-hose connection.
11.08.00	Lifting lugs and eyes and other special tackle shall be provided as necessary to permit easy handling of the agitators and their components.
11.09.00	Static and dynamic (as far as applicable) balancing of all agitators shall be carried out after assembly.
11.10.00	All agitator parts and components shall be designed and calculated for fatigue life, considering maximum bending loads, induced by fluctuating hydraulic forces and torsional loads, based on the installed motor power. For side entry agitators the alternating bending moment resulting from impeller and shaft weight has to be considered additionally.
11.11.00	All exposed moving parts shall be covered by guards.
11.12.00	Side entry agitator shall be flange mounted.
11.13.00	The shape of the impeller blades of side entry agitators shall be designed to avoid wear on the impellers which will affect the agitator performance as specified for a minimum period of 2 years of continuous operation under design conditions for the range of coal & limestone specified in the specification. In order to avoid excessive wear impeller tip speeds must not exceed 12 m/s.

11.14.00	Belt drives (if applied) shall be properly designed to provide a minimum lifetime of 2 years under design conditions
12.00.00	**SLURRY LINES AND VALVES**
12.01.00	Slurry pipes shall be designed to keep the velocity above the settling velocity under all operating conditions. The contractor may provide a recirculation line with motorized isolation valve for the above purpose.
12.02.00	All the pipes handling slurry shall be provided with replaceable rubber lining of proven quality. The Contractor can provide slurry pipes of size lower than 3" made up of FRP material (silicon carbide coating on slurry exposed surface) if it has previous experience of providing the same.
12.03.00	The isolation valves provided in all the slurry lines shall be of knife gate type/butterfly type unless specifically mentioned. Motorized actuators shall be provided for valves requiring frequent operation as indicated in the relevant scheme.
12.04.00	The valves shall be of proven type and the contractor shall submit a detailed valve schedule for employer's approval. Reference list for previous installations for similar application shall also be furnished to the employer.
12.05.00	Bidder shall provide all necessary arrangements for purging & flushing of all the process pipelines, equipments etc.
13.00.00	**PROCESS WATER STORAGE TANKS & PUMPS**
13.01.00	Two (2) Process water Storage tanks (each tank catering to the requirements of 3 x 660 MW units) along with two numbers of 2x100 % Booster water pumps, if required, (Each pump catering to the process water requirements of 3 x 660 MW units) along with all necessary piping, valves, control & instrumentation to feed the clarified water shall be provided by the Contractor. Process water Storage level shall be automatically controlled at operating level by controlling the water flow from the makeup water from terminal point. From the terminal point for process water as detailed in sub-section IV, section VI-Part B, the Contractor shall provide 2x 100% Booster Pumps of required capacity & head to feed process water to the two (2) no. of process water storage tank designed to store 15 minutes of total maximum water required for the entire FGD process (including absorber system and mist eliminator washing system, limestone grinding and slurry preparation system and gypsum dewatering system, etc.) for the unit. All the process water storage tanks shall be designed, fabricated, erected and tested in accordance with the IS:803, latest edition. Additional Corrosion allowance of 1.50 mm on the minimum tank shell thickness as calculated by IS:803, latest edition shall be provided by the bidder. Tanks shall be made from IS:2062 quality mild steel plates of tested quality. The tank shall receive water supplied (as identified in Subsection titled "Terminal points" in Part-A of Technical Specification) by Employer. The Tanks shall be provided with drain, manholes, over flow & inlet level control valves etc.

13.02.00	2x100% Process Water Pumps shall be provided for each unit connected to each of the Process water Storage tanks (total 6 nos. of pumps for 3x660 MW) along with all necessary piping, valves, control & instrumentation. Each pump catering to process water requirement of one unit. The capacity of the pumps shall be such that it shall meet the maximum process water requirement of each unit. A further 10% margin shall be provided over the above capacity for all the above pumps.
13.03.00	2x100% Mist Eliminator Wash Water Pump for each unit connected to each of the Process water Storage tanks (total 4 nos. of pumps for 3x660 MW) along with all necessary piping, valves, control & instrumentation shall be provided by the Contractor. Alternatively, Contractor can use process water pumps for mist eliminator washing if it is the standard & proven practice of the Contractor or its Technology Collaborator. Each pump shall cater to maximum mist washing requirement of one unit. The capacity of the pumps shall be such that the total capacity of working pumps is sufficient to meet the maximum wash water requirements of mist eliminators of the absorber. A further 10% margin shall be provided over the above capacity for all the above pumps.
13.03.04	Two (2) clarified water Storage tanks (each tank catering to the clarified water requirement for 3x 660 MW units) along with two numbers of 2x100 % clarified Booster water pumps (Each pump catering to the clarified water requirements of 3x 660 MW units) from terminal point shall be provided by the Contractor. The two tanks shall be interconnected with an isolation valve.
13.03.05	2x100% clarified water Pumps connected to each of the clarified water Storage tanks for each dewatering stream (total 4 nos. of pumps for 3x660 MW). Each pump catering to clarified water requirement of each dewatering stream.
13.03.06	The type of pumps shall be horizontal centrifugal type designed for continuous operation with semi open or closed impeller. Casing, Gland and Stuffing Box shall be of 2.5 Ni Cast Iron to IS:210 Grade FG 260 or equivalent. Impeller, Wearing rings (as applicable) shall be of Stainless Steel -316 grade and Shaft & Shaft sleeves shall be of SS-410 grade. Pump re-circulation line shall be provided for pumping system. Pumps shall be provided with accessories such as Y-type suction strainers, Coupling guard, drain plugs, vent valves etc.
13.03.07	All the Process water tanks (Process water Storage tanks, Clarified water tank, Emergency water storage tanks etc.) shall be designed, fabricated, erected and tested in accordance with the IS:803, latest edition. Additional Corrosion allowance of 3mm on the minimum tank shell thickness as calculated by IS:803, latest edition shall be provided by the Contractor. Tanks shall be made from IS:2062 quality mild steel plates of tested quality. The tanks shall be of welded construction. Interior surface of the tanks shall lined with replacable chlorobuty/bromobutyl rubber lining of minimum 4 mm thickness or with vinly ester based flake glass lining of minimum 3 mm thickness and the outside surface shall be coated with paint as approved by the Employer. The Tanks shall be provided with drain, manholes, over flow & inlet level control valves etc.

14.00.00	**APPROACH and Handling Facilities**
14.01.00	Proper approach shall be provided for access to all equipments during normal operation and maintenance. Unless otherwise specified, platforms, staircase and ladders shall follow the stipulations specified elsewhere in this specification.
14.02.00	Equipments requiring monitoring during regular operation shall be approachable from the ground floor through staircase. Staircase with minimum width of 1200 mm shall be provided for approach to elevated structures at 5m height from the nearest platform. Below this height a vertical ladder with minimum clear width of 600 mm may also be acceptable.
14.03.00	Platform with a minimum clear width of 1000 mm shall be provided all around the lowest absorber spray levels and mist eleminators. Similar platforms shall be provided at subsequent elevations if they are more than 3000 mm apart from each other. An adequately sized manhole with platform (min. 2 sq. m) shall be provided above each spray level. Ladders/staircase shall be provided for the access to the platform.
14.04.00	The absorber slurry recirculation pumps, gypsum bleed pumps and limestone feed pumps shall be mounted on the ground level. Suitable approach and platforms shall be provided for all the valves required during regular operation.
14.05.00	A 1500 mm space shall be provided around all pumps, except absorber recirculation pumps, where a 2000 mm space shall be provided.
14.06.00	Platform with a minimum width of 1500 mm shall be provided all around the pulverizers and feeders. Approach along with suitable platforms shall be provided for ball loading hoppers.
14.07.00	A 1000 mm wide platform with suitable approach shall be provided around each hydro-cyclone.
14.08.00	A 2000 mm wide floor/platform shall be provided all around each belt filter.
14.09.00	Contractor shall provide motorized hoists and trolleys for all items requiring maintenance and weighing 500 kg or more. All auxiliary structures, monorails, runway beams for all lifting tackles, hoists etc., are included in Contractor's scope of supply. Access ladders with suitable platform shall also be provided for approach to all motorized hoists/trolleys mounted on their runway beams for the maintenance of hoists/trolleys. Items weighing more than 50 kg and required to be replaced for maintenance shall be provided with manual hoists/trolleys with runway beams/supporting structure etc.
14.10.00	The regular basement floor is not acceptable in FGD area. Further local Pits/trenches shall be avoided as far as possible.

14.11.00	Handling arrangement of milling system, Booster fans, Slurry recirculation pumps, oxidation blower, belt feeder system etc. complete with crane/monorail along with removal space for maintenance shall be provided by the Contractor.		
14.12.00	Approach for removal of equipment for maintenance shall be provided.		
14.13.00	All other safety requirements as per the Factories Act, National Electricity code shall be complied with while developing Layout.		
14.14.00	Cable trenches/slits, if unavoidable, shall be provided with adequate cushioning of sand and the same shall be covered with PCC.		
14.15.00	Each Equipment room shall be provided with alternate exits in case of fire/accidents as per requirements of Factories Act and Statutory bodies/insurance companies.		
14.16.00	Minimum Headroom (free height) under all floors, ducts, walkways and stairs shall be 2.50 M.		
14.17.00	Inter-connecting pipes/cables between various facilities of FGD plant shall be routed on the steel trestles to be provided by the Contractor. The clear head room for the same shall be minimum 8 M.		
15.00.00	**ELEVATORS**		
15.01.00	Elevators shall be designed based on following criteria :		
	(i)	Type of service	One (1) no. Passenger cum goods elevator per Absorber & for Mill Building
	(ii)	Design/construction/installation codes	(a) Latest edition of IS:14665 (All parts) AND also meeting any additional requirements of IS:4666, IS:1860 and IS:3534. (b) Any other equivalent code, subject to Employer's approval.Load carrying capacity
	(iii)		1000 kg (minimum).
	(iv)	Rated speed	1.0 m/s.
	(v)	Total Travel	As per FGD supplier's recommendations subject to Employer's approval.
	(vi)	Number of floors to be served	As per requirement and subject to Employer’s approval

	(vii)	Entrance	As per requirement and subject to Employer's approval
	(viii)	Entrance and platform size	As per design/installation codes at (ii) above
	(ix)	Drive/motor	As per Electrical Specifications.
	(x)	Method of control	As per Electrical Specifications.
	(xi)	Machine room and lift Shaft	Pressurized dust proof or Airconditioned machine room as per the requirement of lift manufacturers.
	(xii)	Position of machine room	Directly above the lift shaft.
	(xiii)	Power Supply	As detailed in Electrical Specification

15.02.00 Landing doors of the elevators shall have fire resistance of at least one hour. These doors shall also be smoke tight as far as possible.

15.03.00 Construction of the elevators shall specifically meet all requirements of the codes indicated at Cl. 15.01.00 (ii) and shall have following additional features:

(i)	Flooring of Cabin	:	6 mm thick Checkered Plate flooring.
(ii)	Design, Construction and finish of car & car door	:	Car inside enclosure including inner side of door shall be of stainless steel plate of grade SS:304 of bright finish.
(iii)	Car entrance and landing doors	:	As per BS:476 (Part 20 & 22)
(iv)	Door construction	:	Hollow metal construction from 16 guage thick steel sheet spray painted.
(v)	Signals	:	Car position informer in car both visual and audio, hall position indicator at all floors, telltale lights at all floors, battery operated alarm bell and emergency light with suitable battery, charger & controls.
(vi)	Type of Indicators	:	Soft touch keys and digital luminous display in car operating panel and on all floors landings. (All fixtures in stainless steel face plates).

15.04.00 Technical requirements of Electrical items shall be as per details given in Electrical Sub-Section, Part-B.

15.05.00 Provide sound reducing material below machines in machine room.

15.06.00 Provide special corrosion resistant treatment on all elevator components. The protective treatment shall be subject to Employer's approval.

15.07.00 Elevators shall have provisions to meet following operational requirements:

(i) Selective collective, automatic operation with or without operator through illuminated push button station located inside the lift car.

(ii) Power operated with automatic opening/closing car and landing doors.

(iii) Two push buttons, one for upward movement and the other for downward movement at each intermediate landing, and one push button at each terminal landing shall be provided in order to call the car.

(iv) Push buttons shall be fixed in the car for holding the doors open for any length of the time required.

15.08.00 Fireman's switch shall be provided for each elevator.

16.00.00 DUCT WORK AND DAMPERS :

16.01.00 **Duct Work**

16.01.01 **Sizing Criteria :**

1. Allowable velocities in the duct work.

   Maximum gas velocity shall be 15 m/sec at Design point condition.

16.01.02 **Loads for Duct and Structure Design**

The duct design shall take into account following loads all occurring together:

1. Wind loads as specified.
2. Dead weight including weight of insulation, lining, wash water and the vertical live load.
3. Ash load :
4. All ducts to be designed for one tenth of duct full of ash. The ash density for the purpose of loading shall be at least 1300 kg/m^3.
5. Expansion joint reaction.

6. Seismic Load

7. The following minimum load factors shall be applied to the design loads:

Temperature (Deg.C)	:	27	38	93	149	205	260	316	321
Load Factor	:	1.00	1.02	1.12	1.19	1.25	1.29	1.34	1.42

16.01.03 **Duct Design Pressure**

All flue gas ducts shall also be designed for ± 660 mm w.g., or maximum conceivable pressure of the relevant fans, whichever is higher at 67% of yield strength of material

16.01.04 **Duct Slope**

All ducts shall have a sufficient slope with respect to horizontal so that any chance of accumulation of ash particles or water in the duct can be avoided under all normal/abnormal operating conditions. The inlet duct shall be sloped towards the absorber.

16.01.05 **Type of duct construction:**

The duct shall be of rectangular cross-section and shall be of all welded construction. For rectangular ducts following requirements shall be complied with:

a) Minimum 7 mm thick steel plates for gas ducts & Duct stiffening shall be by means of rolled sections of duct material.

b) A corrosion allowance of 1.5 mm shall be considered for stress calculation for the flue gas ducting.

c) Duct stiffening shall be by means of rolled sections. No internal stiffeners shall be used for ducts from Absorber outlet to chimney inlet.

16.01.06 **Insulation & Lagging**

a) Thermal insulation shall be applied to all air/gas ducts to comply with the requirements of as specified at clause no 18.00.00 of this chapter.

b) Acoustic insulation shall be used, if required, in gas ducts to restrict the noise level to specified values.

16.01.07 **Specific Requirements**

a) The stiffeners provided on the ducts walls shall be of such a design and layout that no rainwater can accumulate on the duct surfaces.

b) The flanges at the bolted joints shall have adequate stiffeners to avoid damages to the flanges.

c) All necessary wall boxes and floor collars shall be provided where the ductwork pass through walls, floor and roof.

d) The floor collars shall be fitted with a high combing to prevent water and dust falling through the hole.

e) The ductwork shall be fitted with a steel hood to cover the opening.

f) Weatherproof flashing shall also be provided wherever necessary.

g) The configuration and design of ducts shall be coordinated with the pulveriser parts removal requirement.

h) Air and gas ducts shall not counter internal bracings, which cause excessive pressure drop.

i) Duct plates shall be designed for one-way beam action over stiffeners and considered fully continuous over all supports.

j) Bidder to ensure proper draining facilities for the complete system including proper drainage of acidic fluids from the ducts so as to avoid any accumulation of acidic fluids.

k) The deflection of the plate, assumed continuous, shall be less than one-half the plate thickness.

16.01.08 **Duct Work Structure**

a) Ductwork sections between expansion joints shall be investigated with regard to their ability to transmit loads to supports. Care shall be exercised to identify uplift condition.

b) Internal stiffeners:

(i) Duct shape shall be maintained by providing internal stiffening elements at or near supports. However, these internal stiffeners shall be used, if and only if, it is not possible to provide external stiffeners.

(ii) Internal stiffening elements shall consist of trusses, preferably comprised of extra-strong steel pipes (min. dia. 76.2 mm) acting in conjunction with external stiffeners. Such internal stiffeners for the flue gas duty between boiler and ESP shall be provided with erosion protection shields.

(iii) The number of internal trusses shall be limited to the minimum required for structural integrity and shaped so as to offer least resistance to gas flow and to minimize the accumulation of fly ash in the bottom of duct.

(iv) Conceptual data of internal stiffeners of the ducting shall be furnished along with the offer.

(v) All the detailed design data shall be furnished to the Employer before the duct support column foundation data submission.

c) Corner angles shall be used on all inside corners of all ducts to provide adequate continuity.

d) Inside welds of corner angles to duct plate shall be continuous and seal welded. Where inside surface of ducts will be coated, welds shall be full throat.

e) Field welding and all connections of bracing (stiffening elements) to stiffeners shall be well designed in order to develop full strength of the members. The gusset plates shall be of 10 mm minimum thickness.

f) The duct, plates, trusses, stiffeners, bracings and ductwork shall be designed as structures in accordance with relevant Indian Standards.

g) All openings in ducts shall be reinforced for all design loads.

h) Ductwork supports may be hangers or sliding bearing, guides and anchorages. A coefficient of sliding friction of 10% can be used with self-lubricated plates such as "LUBRITE" or "MECHANITE", a coefficient of sliding friction of not less than 35% shall be used for steel-on-steel contact. The allowable bearing stress for self-lubricated plates shall be 70 Kg/sq.cm.

16.01.09 **Fabrication Requirements**

a) Fabrication shall be as per IS specification for Design, fabrication and erection of 'Structural Steel for Building.

b) Welding shall be in accordance with Section IX of ASME code.

c) Ducts shall be strength welded and seal welded to produce a gas tight duct. Alignment holes shall be provided in mating flange sections.

d) Ducting shall be detailed and fabricated in a few pieces as practical, taking into account, shipping and erection considerations.

e) Materials improperly detailed or fabricated necessitating extra work during erection on field, shall be the responsibility of the Contractor.

17.00.00 **DAMPERS**

17.01.01 Gas tight, motor operated Guillotine gate type damper shall be provided by the Contractor at the outlet of each Booster fan, in case Booster fan is provided by the Contractor.

17.01.02 **Damper Gas Tightness**

All the gates shall be designed for tight shut off. The gates shall have a guaranteed gas tightness efficiency (on flow) of not less than 99.95% along the duct as well as from the duct to atmosphere or from atmosphere to the duct, depending on the pressure in both the damper open and damper closed condition without the use of seal air fans of the damper. The dampers shall be 100% leak tight with seal air fans under operation. The gas tightness shall be demonstrated at shop for minimum one type of damper of each type and size.

17.01.03 **Pressurization Fans:**

a) All gates at Booster Fan discharge shall be provided with 2x100% pressurization fans to achieve 100% sealing efficiency.

b) The location and scheme for pressurization system shall be subject to Employer's approval.

17.01.04 All gates shall be designed to withstand the operating air and flue gas temperature without distortion.

17.01.05 All guillotine gates shall be located in horizontal duct to avoid fly ash build up when in closed position and shall be of top entry type.

18.00.00 **THERMAL INSULATION AND CLADDING**

18.01.00 Thermal Insulation along with aluminum cladding shall be provided for all the equipments/surfaces having skin temperature more than 60degree Celsius. The specification of the insulation including type, density, thickness, heat conductivity and finish shall be designed based on criteria specified below. The insulation thickness shall be designed based on following criteria.

Criteria		**Design Conditions**
(i)	Ambient Temperature	45℃
(ii)	Surface wind velocity	0.25 m/sec.
(iii)	Emissivity of Aluminium	0.2
(iv)	Cladding surface temperature	60℃ (max.)

	(v)	Thermal conductivity of insulation material	Not less than the Maximum values as per IS:8183
	(vi)	Pipe/Equipment wall temperature	Maximum fluid design temperature
	(vii)	Overall heat transfer coefficient and insulation thickness	To be calculated as per ASTM C 680-89

However, the minimum insulation thickness, however, shall not be less than 75 mm.

18.02.00 Material and application of insulation material, protective cladding, wire mesh etc. shall be conforming to latest edition of following codes:

(a) IS:8183

(b) IS:3677

(c) IS:3144

(d) IS: 14164

(e) IS:280

(f) ASTM-B 209

18.03.00 Insulation material for all equipments, ducting, etc. shall conform to following requirements:

Parameters		Requirement
(i)	Material	(a) Lightly resin bonded mineral wool of best grade conforming to IS:8183. (Hand made mattresses is not acceptable). Material shall be rock wool only. Slag wool or slag wool inclusion shall not be accepted.
		(b) Lightly resin bonded glass wool mattress, having density 64 Kg/m^3 (min.), self stitched in shop can also be accepted for temperature less than 400°C.
(ii)	Bulk density of lightly resin bonded mineral rock wool mattresses	
	(a) For use upto 400°C	- 100 Kg/m^3

(b) For use above 400°C - 150 Kg/m³

(iii) **Physical requirements -**

Following shall be met by testing as per relevant clauses of IS:3144.

(a)	Shot content	5% by weight (maxm.), size of any shot not to exceed 5 mm in diameter
(b)	Bulk density	To comply with 16.03.00(i) & (ii) above.
(c)	Weight gain by moisture absorption	2% (maxm.)
(d)	Sulphur Content	Not exceeding 0.6%
(e)	Alkalinity as percentage of Na_2O	Not exceeding 0.6%
(f)	Maximum oil content	Not exceeding 0.3% by weight
(g)	Total carbon content	Not exceeding 0.3% by weight
(h)	Settlement	Nil (When tested as per Cl. 21.1 & 21.2 of IS:3144)
(i)	Handability	Fully handable, without any lump formation and disintegration of material
(k)	Loss of weight after combustibility test	Not exceeding 5% by weight

18.04.00 The Insulation mattress shall be rated incombustible when tested by the method prescribed in clause 15 of IS:3144 and shall meet the requirement of the Mercantile Marine department, Lloyd's Register of shipping, underwriter, fire hazards codes and other International standards.

18.05.00 In addition to requirements as mentioned above, insulation material (and protective covering) shall:

(a) Be fresh, incombustible, rust proof, non hygroscopic,

(b) Be capable of withstanding continuously and without deterioration the maximum temperature to which they will be subjected.

	(c) Not react chemically, either to itself or with other components. (d) Not sustain any fungi, or vermin and must not pose health hazards.
18.06.00	The Mineral wool shall: (a) Pass standard combustibility test both immediately after application and after subjected to maximum operating temperature for not less than 100 hrs. (b) Not suffer permanent deterioration as a result of contact with moisture due to condensation and shall be free from objectionable odor. (c) Not cause corrosion of the surface being insulated or of cladding on it under normal site conditions. (d) Not suffer any quality deterioration under specified service conditions (both cold/hot face temp.) of use.
18.07.00	The use of insulation of finishing materials containing asbestos in any form is not permitted.
18.08.00	Insulation mattress/section shall be supplied in thickness of 25,40,50 and 75 mm. Insulation of higher thickness shall be made up in multiple layers using mattress/slabs of thickness specified above. However, if the required thickness is such that by using above mattress/slabs the calculated thickness is not achieved, the mattress/slabs in increment of 5 mm shall be acceptable for outer layers. The min. thickness however, shall not be less than 25 mm and number of layers shall be minimum and innermost layer shall be thickest.
18.09.00	**Sheathing Material** Sheathing material for all insulated surfaces, equipments, piping etc. confirming to ASTM B-209-1060 temper H-14 or IS:737 Gr 19000/H2, shall be provided. The thickness of aluminium sheathing to be used shall be 22 SWG (0.71mm).
18.10.00	Binding and lacing wires shall be 20 SWG Galvanised Steel wire
18.11.00	All Straps and bands shall be Galvanized Steel. Bands shall be 20 mm wide and 0.6 mm thick. For securing Aluminum sheathing material, stainless steel or anodized aluminum bends shall be used.
18.11.01	Screws shall be of galvanized steel, check headed, self tapping type. Above 400 degree Celsius temperature, screws shall be stainless steel.
18.12.00	Hexagonal wire mesh netting shall be 10-13 mm aperture and atleast 0.56mm diameter conforming to following Galvanized Steel wire.

18.12.01 Non metallic components like 3 mm thick mill board, aluminum pigment sealant, white glass cloth, insulating cement, neoprene washer shall be provided.

18.13.00 **Application of Insulation**

18.13.01 **General**

(a) All surfaces to be insulated shall be cleaned of all foreign materials such as dirt, grease, rust etc. and shall be dry before the application of insulation.

(b) Before applying the insulation the contractor shall check that all instrument tapping, clamps, lugs and other connections on the surface to be insulated have been properly installed as per the relevant erection drawing.

(c) All flanged joints shall be insulated only after the final tightening and testing.

(d) The insulation shall be applied to all surfaces when they are at ambient temp. Ample provision shall be made for the maximum possible thermal movement and the insulation shall be applied so as to avoid breaking/telescoping due to alternate periods of expansion and contraction.

(e) All cracks voids and depressions shall be filled with finishing cement, suitable for the equipment operating temp. so as to form a smooth base for the application of cladding.

18.13.02 All the refractory and insulation materials required for complete field application of insulation, cladding etc. covered under these documents and specifications shall be furnished with the equipment. They shall conform to the requirements of the various relevant ISI standards or other approved equivalents. All items such as insulating cement, sealing material, insulation material, screws, washers, etc., needed to complete the work in the course of the application of insulation and refractory shall be furnished. All insulating materials shall be chemically inert in both the dry and wet state and shall withstand the full working temperature conditions to which they are exposed without any deterioration. The gas ducts shall be insulated with mineral wool block or mineral wool blanket and all other equipment operating at elevated temp. not enclosed in the boiler casing shall be insulated with calcium silicate blocks, mineral wool blocks or mineral wool blanket insulation.

18.13.03 **Application on Piping**

(a) All vertical pipes shall be provided with the suitable insulation supports to prevent collapsing/crushing of insulation due to its self weight. Support rings shall be provided on all vertical piping with a difference in elevation of 4 meter or above, and there shall not be more than 3 m straight length between support rings.

(b) Longitudinal joints of insulation mattress sections of horizontal piping shall be on the bottom or at the sides of the pipe.

(c) When more than one layer of insulation mattress/section is required on piping the circumferential joints on adjacent layers shall be staggered by at least 150 mm and longitudinal joints shall be staggered by at least 50 mm.

(d) The mattress type insulation shall be formed to fit the pipe and applied with the mattress edges drawn together at the longitudinal joints and secured by lacing wire. Pipe section insulation shall be fitted on pipe using binding wires.

(e) Where insulation is applied in two or more layers each layer of mattress shall be backed with hexagonal wire mesh. For the first layer of insulation and in case of single layer insulation, hexagonal wire mesh shall be provided on both the surface of the mattress. For pipe sections, the sections shall be held in place by binding wires without any wire mesh.

(f) The ends of all wire loops shall be firmly twisted together with pliers, bent over and carefully pressed into the surface of the insulation. Any gap in the insulation shall be filled with loose mineral wool or finishing cement.

(g) Insulation mattress/section ends shall be terminated at a sufficient distance from the flanges to facilitate removal of bolts.

(h) The insulation shall be held in place by fastening over with binding wire for insulation surface with diameter upto and including 550 mm and with metal bends for insulation surfaces with diameter over 550 mm. The fastening shall be done at intervals of 250 mm except where specified otherwise. The ends of the binding wires shall be hooked and embedded in the insulation. The straps shall be mechanically stretched and fastened with metallic clamping seals of the same materials as the strap.

(i) Insulation for application on bends and elbows shall be cut into mitred segments, sufficiently short to form a reasonably smooth internal surface. After the application of insulation material place, insulating cement shall be applied as required to obtain a smooth surface.

(j) Weather hoods shall be provided for insulated piping passing through floors/walls.

(k) All pipe attachments coming on horizontal pipes, inclined pipes and bends shall be insulated along with pipe such that there will be no insulation applied to hanger rod and the component connecting hanger rod to pipe attachment. All pipe attachments exposed to weather shall be provided with weather proof covering.

(l) Upstream of all drain lines and the lines connected to steam traps, shall be insulated upto and including first isolating valve for heat conservation. Rest of such lines such as downstream of the drain valves, traps etc. and other

lines such as safety valve discharges, vents, etc. shall be insulated for personnel protection.

18.13.04 **Application on Valves and Fittings**

(a) All valves fittings and specialties shall be insulated with the same type and thickness of insulation as specified for the connected piping with the special provisions and or exceptions as given below.

(b) All valves and flanges shall be provided with removable box type of insulation covered with box fabricated from aluminium sheets of thickness same as the connected pipe cladding. Adjoining pipe insulation shall be bevelled back to permit removal bolts and nuts or bands. The portion of the valve which can not be covered by box type insulation shall be filled by loose insulating material of packing density at least equal to that of the insulating material of adjoining pipe. The insulation for valves/flanges shall be applied after the finishing has been applied over the connected piping. The cladding shall be applied in such a manner that the bonnet flange can be exposed easily without disturbing the complete insulation and cladding.

(c) Flanges on lines having temperature upto and including 150 deg.C shall not be insulated.

(d) Union shall not be insulated.

(e) Expansion joints, metallic or rubber, shall not be insulated unless otherwise specifically indicated.

(f) Safety valves shall be insulated.

18.14.00 While applying mineral wool blanket insulation:

(a) Provide expended metal or hexagonal wire mesh on both sides for single layer mattress and on first layer in case of multilayer insulation. Subsequent layers of multilayer insulation to have only one side wire netting.

(b) The edges of adjacent blankets to be leased together, by appropriate lacing wire as per Clause 16.08.00.

(c) Any gap between joints between insulation layers shall be filled by loose mineral wool confirming to IS:3677.

(d) All insulation to be secured by 1.63 mm dia wire netting over blankets with ends of wire tightly twisted, and pressed in to insulation surface.

(e) Impelling pins shall be placed on centers not exceeding 300 mm.

18.15.00 Flue Gas ducts with external stiffeners shall have first layer of insulation between the stiffeners and a second layer of insulation over stiffeners so that stiffeners are also insulated and a level surface is achieved. Other requirements are same as given in Clause 18.09.00.

18.16.00 **Application of Metal Cladding**

All insulated surfaces of the FGD shall be provided with metal cladding in accordance with the following requirements.

(a) All insulation procedure of metal cladding shall have prior approval of the Owner.

(b) All insulated surfaces of FGD shall be covered with aluminium cladding.

(c) Cladding for FGD components are to be finished with plain aluminium sheeting of thickness not less than the values specified. Wherever an inner casing plate is necessary to effect a gas tight enclosure, the plate shall be of mild steel of required thickness, but not less than four (4) mm suitably stiffened and supported.

(d) Cladding on straight surfaces shall be finished with aluminium sheeting of at least 20 SWG thicknesses suitably pressed along diagonals to form diamond shape or otherwise formed.

(e) Cladding for insulated circular surfaces will be constructed from aluminium sheets of thickness not less than 20 SWG.

(f) Weather proof flashings shall be installed where the panels intersect with columns and at other similar joints.

18.17.00 **Application**

All metal cladding shall be fabricated and installed to ensure a neat appearance and no open ended sections of cladding shall be left uncovered. The following provisions shall also be complied with:

(a) All closures, flashings and seals required shall be provided and installed.

(b) An asphalt and craft paper moisture barrier shall be provided to the aluminium cladding for all out door applications. Such moisture barriers shall be fixed to the inner surface of the cladding or shall be cemented to the outside surface of the insulation before application of cladding.

(c) All the used in the out door cladding shall be provided with Neoprene washers.

(d) All openings and joints in outdoor cladding for piping connections, supports or access shall be suitably flashed and weather-proofed. Where such flashings or weather-proofing can not effectively control the entry of moisture, then such openings and joints shall be weather-proofed by application of aluminium pigmented sealer.

(e) Cladding on the top surfaces of the FGD, duct work and equipment shall be suitably reinforced to prevent damage by personnel walking thereon.

18.18.00 **Protection of Equipment during insulation application**

All equipment and structure shall be suitably protected from damage while applying insulation. After completion all equipment and structures shall be thoroughly cleaned of insulating materials which might have fallen on them.

19.00.00 TYPE TEST

19.01.00 Full scale type tests using actual equipment shall be conducted by the Contractor for the equipment mentioned in the subsequent clauses below:

19.01.01 Full range and full scale performance testing shall be conducted at shop on one number each of the following Fans as per BS 848, Part-1:

(a) Booster Fan (in case Booster Fan is provided by the Contractor)

The performance testing at shop shall be conducted using actual fans

19.01.02 Leak tightness testing of dampers (incase Booster Fan is provided by the Contractor) for each type and size of damper at shop to demonstrate the guaranteed gas tightness efficiency (on flow). The minimum guaranteed gas tightness efficiency of dampers shall not be less than that indicated in clause no. 17.01.02 of this Sub-Section.

19.02.00 The Bidder shall indicate the charges for each of these type tests separately in the relevant price schedule of Bid Proposal Sheet (BPS) and the same shall be considered for the evaluation of the Bids. The type test charges shall be paid only for the test(s) actually conducted successfully under this contract and upon certification by the Employer's Engineer.

19.03.00 The type tests shall be carried out in presence of the Employer's representative. Contractor shall inform the Employer about his readiness for conducting the type test and issue such notice to the Employer 30 days in advance, along with schedule of the type tests. The Contractor shall obtain the Employer's approval for the type test procedure before notifying the Employer about his readiness for conducting the type test. The type test procedure shall clearly specify the test set-up, instruments to be used, procedure, acceptance norms, recording of different parameters, interval of recording, precautions to be taken etc. for the type test(s) to be carried out.

19.04.00	Irrespective of the requirement of conducting the type tests under this contract, The Contractor shall submit the reports of the type tests carried out for the equipments listed above in clause no. 19.01.00 and These reports should be for the tests conducted on the equipment for the model / type / size / rating to those proposed to be supplied under this contract and the test(s) should have been either be conducted at an test facility/shop/independent laboratory or should have been witnessed by a client. The Employer reserves the right to waive conducting of any or all of the specified type tests under this contract, in which case the type test charges shall not be payable for the type tests waived by the Employer.
19.05.00	All acceptance and routine tests as per the specification and relevant standards shall be carried out. Charges for these shall be deemed to be included in the equipment price.

SUB-SECTION-I-M2

LIME STONE & GYPSUM HANDLING SYSTEM

A-01 : SYSTEM PARAMETERS AND OPERATION & CONTROL PHILOSOPHY

1.00.00 The specifications as brought out in various Sub-sections for mechanical equipment shall be applicable to the system of proposed limestone & gypsum handling plant and specifically to all mechanical including their operation & control philosophy. However, some specific parameters of the entire system as a whole and the major equipment are brought out as under.

2.00.00 SYSTEM DESIGN BASIS

Following shall be considered while designing the LHP & GHP:

a) The limestone delivered to the power station shall be of size 250 mm & below. However occasionally 1-2% limestone of 400 mm lump size may also be encountered.

b) For limestone handling system the nominal moisture content shall be taken as 20%.

c) The sizing and selection of the vital equipment viz. crushers vibrating feeders etc. covered under the system shall be based on the above characteristic of limestone and operating conditions.

d) The design capacity of the LHP/GHP conveyors shall be 110% of the rated capacity. The mechanical and structural / civil system shall be designed for LHP/GHP rated capacity and round the clock operation. For LHP/GHP both the streams shall be considered to be operating simultaneously.

2.01.00 For the purpose of volumetric computation, the bulk density of the limestone shall be taken as 1400 kg/cu.m. Therefore for calculation of belt conveyor capacity, for their drives & drive motors kW requirement, and sizing (volume calculations) of chute, hoppers etc. the above bulk density shall be considered. For all other purposes viz. for stresses/ load on structures, torque calculations, Loading on Apron feeder table loading on VF tables, sizing of actuators for flap gates, R&P gates, calculations of plugged chute/ hopper loads etc. the bulk density of the limestone shall be taken as 1700 kg/ cu.m. For gypsum, the bulk density shall be taken as 900 kg/cu.m for volumetric computation and 1250 kg/cu.m for torque and power calculations and loads for civil/structural design.

SYSTEM PARAMETERS

2.02.00 **Conveyor System**

i. Rated capacity : 150 TPH
ii. Minimum Belt width : 800 mm upto crusher house & 650 mm onwards
iii. Maximum Belt speed : 2 M/sec.

BOX FEEDER OR BULK MATERIAL RECEIVING UNIT OR TRUCK UNLOADING SYSTEM OR SURFACE FEEDER:

The Box Feeder should be a robust, proven, above the ground for unloading from trucks/ self-tipping trucks or from loader shovels. The unit should be designed for rapid intake and temporary live storage of material before transferring on to the crusher house. The intake and onward discharge capacity to be 150 TPH per Box Feeder.

2.02.01 **Belting and Pulleys**

(a.) Belt ratings shall be selected in such a way that there are only two (2) ratings of belting. This however excludes sealing belt (for sealing slots of tripper floor) and belting of belt feeders. Belting shall be completely interchangeable among same rating of belt.

(b) Minimum number of plies for belting shall be four (4) for 150 TPH conveyor.

(c) For Pulley, following minimum parameters shall be followed:

(1) Maximum allowable deflection of shaft at hubs : 5 Minutes

(2) Shell Thickness: 12 mm (min)

(3) End disc plate thickness: 16 mm (min.)

(4) Diameter:

(i) All drive pulleys : 630dia (min)

(ii) All balance pulleys : 500 dia (min)

Further approval from belt manufacturers shall be obtained by the contractor regarding the adequacy of the pulley diameters.

d) Maximum type of pulleys permitted based on pulley diameter and shaft Diameter shall be limited to three (3) nos. These
Shall comprise of two (2) nos. drive pulleys & one (1) no. for all balance pulleys excluding tripper & SS pulleys.

2.02.02 **Limestone Crushers & Vibrating Feeders**

(a) Nos. required : Two (2) each

(b) Guaranteed (rated) capacity considering 100% feed above (+)20 mm size : 150MTPH

(c) Input size (for sizing of crusher) : (-) 250 mm

(d) Guaranteed size of output from : Min 90% down to (-) 20 mm hammer mill type crusher

2.02.03 **Travelling Trippers (Mobile)**

(a) Nos. required : Two (2)(one at ground storage hopper & Two (2) at mill bunker building

(b) Type : Motor driven rail mounted, two way chute discharge

2.02.04 **Paddle Feeders**

(a) Nos. required : Two (2)

(b) Guaranteed (rated) capacity : 150 TPH

(c) Capacity adjustment capacity : 20% to 100% of guaranteed(in case of hydraulic drive) capacity

(d) Maximum limestone lump size to be handled by paddle feeder. : 30 mm

2.02.05 **LHP EQUIPMENT**

a) Design capacities & margins

Sl no	Equipment	Duty requirement	Design capacity as %age of duty requirement
1	Crushers	2x50%	110%
2.	Vibrating screening feeders	2x50%	110%
3.	Paddle feeders	1X100%	125%
4	Belt feeder for crusher house	2x50%	110%

2.02.06 **Drive equipment Rating**

Continuous Motor Rating (Name Plate Rating) at 50 Degree Centigrade Ambient temp. for Electric Motors

a) For conveyors of belt conveyor systems — *120% of actual power at drive motor output shaft at specified design capacity

b) Crushers, wagon tipplers, apron feeders, side arm j-rail hoists (travel and hoisting), elevators, rack and pinion gates, all the drives in sampling units, various pumps of — *110% of actual power requirement at drive motor output shaft at guaranteed (rated) capacity.

DS/DE systems, service water systems, cooling water system, potable water system and sump pumps, Ventilation Fans.

*The actual power at drive motor output shaft shall be calculated after considering all the losses of down the line equipment's of the drive train.

Gear Box Rating :

a) For belt conveyor systems @ Service factor X {1.2 times the actual power requirement at drive pulley shaft at design capacity}

In any case, gear box rating shall not be less than motor nameplate rating.

b) For other equipment @ Service factor X {1.2 times the actual power requirement of the driven equipment }

@ Service factor shall include all the components considered by the supplier and should be clearly indicated in manufacturer's gear box selection catalogues

Coupling

Not less than motor nameplate rating.

2.02.07 **Service Water System**

Service water connections are to be provided in conveyor galleries & tunnels at 50 meter interval and one (1) no. on each floor of Junction house and minimum two (2) nos. on each floor of crusher house.

(a.) Flow at each valve : 5 cub.m/hr

(b.) Minimum discharge Pressure at tap point : 2 kg/sq.cm

(c) No. of valves operated: 6 nos. simultaneously

2.02.08 **Potable Water System** : As specified elsewhere in the spec.

2.02.09 **Ventilation System**

A. Mechanical Ventilation System

i. Underground Areas : Minimum 15 supply air changes and minimum 7 exhaust air changes per hour.
ii. Other Areas Minimum 10 supply air changes per hour.

B. Pressurized Ventilation System: Minimum 15 supply air changes per hour

C. Air Conditioning System: Adequate number of air changes to Maintain in uniform temp. & humidity as specified elsewhere.

2.02.10 **Dust extraction system**

Type : Dry type system with bag filters

2.02.11 **Chutes**

Minimum clear cross section of chute : 800 mm x 500 mm for uncrushed limestone
600 mm x 500 mm (inside both ways).

Minimum clear cross section of Discharge debris chute 1000mm X 1000mm (inside both ways)

2.02.12 **Hoists**

Suitable hoists shall be provided for erection & servicing of all major equipment in LHP/GHP. The equipment to be covered shall include (but not limit to) all conveyor drive units, all pulleys, crushers along with drive units, in line magnetic separators, sampling units, sump pumps, various service water/potable water pumps, gravity take up units, apron feeders, suspended magnet, removal of equipment from tunnels & underground building lifting of belt drum at all transfer houses/crusher house/bunker floors etc.

Hoist Drive

(i) More than 2.0 tonne or more than 10.0 m lift or hoists coming out-side the buildings	Motor driven for both travel & lift.
(ii) Other hoists including the hoists for handling takeup pulley and takeup weight	Manual for both travel & lift.

3.00.00 OPERATION AND CONTROLS

3.01.00 This section is intended to cover control/instrumentation and operational philosophy as specified hereinafter complete in all respects, required for complete Lime Stone handling plant.

3.02.00 **General Requirements**

The instruments and controls to be furnished and erected under this specification are as required for safe and satisfactory operation of the Lime Stone Handling System, as outlined under mechanical section and as specified elsewhere in the specification. For the equipment and materials procured by the Contractor from his sub-vendors, the Contractor shall study the specification, safety requirements, interface drawings for such equipment and material in detail and shall coordinate his work with his sub vendors and Employer's DDCMIS system and supply instrumentation and control to suit the actual Lime Stone Handling equipment.

3.02.01 **Standards / Codes**

All construction, installation, workmanship, design & equipment shall conform to acts, rules & regulations of the jurisdiction within which the project is to be located, and to the current edition of the following or equivalent standards or codes, in so far as they apply:

American Iron & Steel Institute (AISI)

American Society for Mech. Engineers (ASME)

American Society for Testing & Materials (ASTM)

American Wire Gauge (AWG)

Institute of Electrical & Electronic Engrs. (IEEE)

Instrument society of America (ISA)

National Electrical Code (NEC)

National Electrical Manufacturers Association (NEMA)

United States of America standards (USAS)

Bureau of Indian Standards (BIS)

Conveyor Equipment Manufacturers Association (CEMA)

This Sub-section shall be read in conjunction with Electrical Sub-sections.

3.03.00 **General Construction and Design**

3.03.01 **General Construction**

Control desks/panels and annunciation system shall be as per the requirement of electrical Section. Annunciations, indications, electrical meters and instrumentation shall be provided as specified.

DesignThe complete Limestone & Gyopsum handling plant shall be controlled from Employer's DDCMIS system as detailed elsewhere.

The Contractor shall provide a comprehensive control indication and annunciation scheme. Contractor shall furnish block diagram and write-up on the scheme proposed. The final scheme will be approved by the Employer. In general, interlocking shall be achieved through feed-back signals from field equipment. Comprehensive Annunciation and Indication scheme shall be provided such that, it will be possible for the operator to locate and identify the fault from the face of DDCMIS/LVS/Control-Panel/ TFT itself. The scheme shall include the basic remote control instrumentation, indication and annunciation requirements as per various technical specification requirements.

However, the Contractor may offer any alternative proposal which he considers to be equal, superior to the scheme as described in subsequent clauses below for achieving reliable and trouble free operation of the plant, for consideration of the employer.

4.00.00 OPERATION AND CONTROL PHILOSOPHY

The Lime Stone handling system shall be controlled from the following control points.

4.01.00 **Lime Stone Handling Plant Main Control Room**

Overall, operation of the following equipment of Lime Stone Handling Plant shall be controlled from the main LHP & GHP control room.

(a.) Conveyors, Crushers ,feeders, flap gates,

(b.) Complete Dust extraction system, service water system, cooling water system & potable water system.

(c.) Ventilation system (group/individual control as required).

(d.) In line Magnetic separators and Suspended Magnet (ON/OFF control with indication).

(e.) Metal Detectors (ON/OFF control with indication).

(f.) Lime Stone Sampling Units.

(g.) Belt weigher (ON/OFF control with indication)

(h.) trippers over Silo

4.02.00 **Local Control Panels**

Local control stations for following equipment's shall be provided

(a) Paddle Feeders

(b) Belt Weighers

(c) Metal detectors

(d) Electric hoist - wall mounted control box with pendent push button controls.

(e) In line magnetic separators

(f) Suspended Magnet

(g) Lime Stone Sampling Units

(h) Travelling tripper

All the above local control panels shall be accessible and located near their respective equipment and shall be complete with all the required controls, interlocks, annunciation's etc.

4.03.00 In addition to the remote control of various equipment local stop push button stations shall be provided for all equipment.

4.04.00 **System Operation**

4.04.01 Operation philosophy of the plant, in general, shall be as elaborated below:

(a.) Lime Stone flow path selection shall be done from CRT/Keyboard to select the following conveying paths.

(1) Limestone from Unloading Hopper to FGD System Silo

(2) Limestone from Unloading Hopper to Limestone Storage Hopper

(3) Limestone from Limestone Storage Hopper to FGD System Silo

The Limestone handling system operator will select the above paths from OWS located on the main control desk. The flow stream path is then selected by positioning different flap gates/ movable discharge pulley at desired positions by means of keyboard available at the central control desk. Once the system is in the operation, the gates/ movable discharge pulley cannot be moved from their positions and path. Flap gates which do not come in the stream in which Lime Stone flow is taking place, can be operated at any time. However, for the flap gates in bunker area conveyors, it shall be possible to change flap gate position while the conveyor is in

operation and feeding Lime Stone using interlock bypass facility, provided that sequential permissive are available.

The Control system will be designed for "Auto" & "Manual" operation of the conveyors and Bucket Elevators in the selected path. Auto/Manual Selection shall be done from keyboard.

(i) Lamp test facility will be provided for the annunciation and mimic lamps.

Paddle Feeders

Paddle feeders shall be controlled from the local control panel suitably mounted on the unit. Requirement of operation as described elsewhere in the specification shall be complied with. Following indications shall also be provided on the local control panel:

(a.) Motor ON/OFF

(b.) Motor O/L protection operated

(c.) Brakes applied (if provided)

(d.) "Digital pressure indications of Hydraulic Power pack including those of hydraulic pump discharge, return (leakage) traverse pump discharge (forward and reverse) oil line."

(e.) Limestone flow rate

Main Hydraulic pressure of paddle feeder wheel drive system to be reduced to minimum through its control circuit during each tripping of main drive motor.

4.05.00 **Conveyor System**

(a) Each conveyor shall be protected against damage to the edge of the belt due to excessive sideways movement by providing an adequate number of belt sway switches. In addition, each conveyor shall be provided with one (1) No. speed detection device (zero speed switch).

(b) All the conveyors shall be protected from reverse running due to power failure by providing mechanical or electrical locking system.

(c) The starting sequence of the conveyors shall follow a direction opposite to that of flow of material i.e. :

(1.) In case of conveying of Limestone to FGD System Silo, start from Silo and end up.

(2.) The starting of mobile trippers shall be interlocked with operation of the conveyors.

(d) Any individual equipment (belt conveyor etc.) should not be allowed to start unless the equipment immediately following the same in the direction of flow of material is already in operation.

(e) Stop/tripping of any equipment from running condition shall trip all preceding equipment in the system.

(f) Adequate number of pull-cord switches shall be provided at suitable intervals along the length of each belt conveyor, which shall enable the respective

conveyor to be stopped immediately. Each pull chord switch shall be identified by a specific number on HMI in the main control room. Each belt sway switch shall also be identified by a specific number on HMI in control room.

(g) Means shall be provided to pre-warn personnel working nearby when starting any conveyor or mobile tripper.

(h) Interlocking of various conveyors shall be achieved with Flap Gate, discharge pulleys, limit switches and zero speed switches.

(i) Motors shall start only when the brake/rail clamp if-provided, is in "not applied''condition. This signal shall be obtained from limit switch provided for that purpose.

(j) Once a conveyor trips, flap gate directing Limestone from this conveyor shall change over its position with a time delay and shall come back to the original position again. This is to prevent jamming of gate.

(k) Tripping of the respective conveyor shall be provided in case any of mobile trippers starts running along with conveyor belt at speed higher than their rated speed by providing an over speed sensing device on the equipment.

(l) It shall be possible to trip bunker conveyor from mobile tripper.

(m) Where ever scoop type coupling provided for HT motors, the coasting time of respective conveyor, thrustor brake, actuator selection and the chute size shall be so selected such that there is no spillage of Lime Stone from any down stream conveyors during next start.

4.06.00 **Interlocking**

(a.) The following conveyors / equipment will come under interlock scheme :-

(1) All conveyors

(2) Crushers

(3) Paddle feeder

(4) All flap gates

(5) Metal detectors

(6) Magnetic Separators and suspended Magnet

(7) Belt scale

(8) Mobile Trippers

(9) Vibrating Feeder

(b.) The following equipment will not come under interlock of the conveyor scheme.

(1.) All dust extraction systems & service water system.

(2.) Ventilation systems

(c.) All conveyors and equipment will have local push button stations each consisting of :

(1.) Pos - I, Pos - II & stop button for flap gate

(2.) Emergency stop push button (Red) for other equipment

(d.) Belt scale shall be started when relevant conveyors are started.

(e.) Limestone handling plant shall be tripped in case of detection of fire.

(f.) Interlock for H.T. Motor :

H.T. motors used will continue to run on no load by disengaging the fluid coupling in case of failure of any process interlock. The H.T. motors will however be tripped in case of any motor fault like O/L, high motor winding temperature etc. In addition, in case of normal stop command, after running of the system, motors will stop.

(g.) The following are the various safety interlocks for the conveyors and other equipment. This list is indicative only and the Contractor shall develop a comprehensive interlocking scheme.

Conveyors

a) Pull - Chord switch - not operated

b) Belt sway switch - not operated

c) Under speed switch - closed at 90% speed of the conveyor within designed accelerating time.

d) Motor protection - not tripped

e) Local stop PB – reset

f) Chute Block switch - not operated.

g) Brakes for conveyor – not operated.

h) Trip circuits healthy.

i) Temp. of fluid coupling oil - not high

Travelling Tripper :

a) Stop PB in Local control station - reset

b) Motor O/L not tripped.

c) Over Travel Limit switches - not tripped.

Magnetic Separators / Metal Detectors / Suspended Magnets

a) O/L / fault relay - not tripped.

b) Stop PB (Local & Remote) reset.

c) Metal detector reset

d) Oil temperature - not high

Flap Gates:

a) End of travel limit switches - reset.

b) Torque limit switches - reset.

c) Local stop - reset.

4.06.01 The lists of indications and audio-visual annunciation given in subsequent clauses are indicative only and the same shall be finalised during detail engineering.

4.06.02 Status indications in Large Video Screen

Following individual status indications shall be provided in LVS with individual ON/OFF/TRIP indications on CRT.

(a.) Conveyor 'ON'

(b.) Flap Gate.

(c.) Belt scale flow rate indication and totalizer.

(d.) Belt sway switch operated for each conveyor (individual switch indication on CRT).

(e.) Pull cord switch operated for each conveyor (Individual switches indication on CRT).

(f.) Zero speed switch operated for each conveyor

(g.) Travelling tripper position.

(h.) MD/ ILMS/ CSU ON

(i.) DS/ SW/PW/CW/DE/ Vent ON (System wise)

(j.) Unit wise MW indication, total Lime Stone flow & Bunker level.

Further Mimic lamps for HT and LT SLDs shall be provided on the control desk**.**

4.07.00 **Annunciation System:**

DDCMIS/Control desk shall be provided with adequate number of facia type annunciation windows operating through DDCMIS for the following audio-visual fault annunciation purposes. Wherever group annunciation is provided, alarm status of individual equipment shall be provided on OWS.

(a) 3.3 kV Breaker Trip (Group wise for each board)

(b) 415 V MCC Breaker Trip (MCC wise)

(c) Bus under voltage for each LT MCC & HT switchgear buses.

(d) Following group wise annunciation shall be provided for transformers :

(1.) Buchholz alarm

(2.) Winding/oil temperature high alarm

(3.) Oil level low alarm

(4.) Buchholz trip

(5.) Winding/oil temperature high trip

(e) A.C Control Supply failure.

(f) D.C. Control Supply failure.

(g) Annunciation supply failure.

(h) Both CPU fail

(i) Stand by CPU in service

(j) H.T. motor overload alarm (individual)

(k) HT motor bearing/ winding temp. high alarm (for each) and trip (for each)

(l) HT motor trip on electrical fault (for each)

(m) LT motor overload tripped (for each).

(n) Belt sway switch operated (for each)

(o) Pull cord switch operated (for each)

(p) Zero speed switch operated. (for each)

(q) Chute plugged (for each)

(r) Tripper over speed tripped (for each)

(s) Magnetic separator fault and cleaning belt trip.

(t) (i) Metal Detector fault (for each)

(ii) Metal detected / MD not reset (for each)

(u) Belt Scale fault (for each)

(v) Sampling system faults and trips (for each)

(ab) Dust suppression/service water system faults and trips (system wise)

(ac) Oil temperature of fluid coupling high

(ad) 20% spare window

For identification of the fault for a particular conveyor or equipment, status indication against that conveyor / equipment in the mimic will start fast flickering and the annunciation window will be blinking against that particular fault. In addition, a buzzer (alarm) will start sounding. After acknowledgement of the fault, the buzzer will stop, but the fast flickering on the mimic and the steady glow on the annunciation window will continue until the fault is cleared and the Reset push button is pressed. When the fault is cleared and the Reset push button is pressed, the status indication of that conveyor / equipment on the mimic will start slow blinking if it is on selected path otherwise it will go off and the steady glow in the annunciation window will go off. However, pressing of the Reset push button before clearance of the fault, will have no effect on the lamps.

At the time of a fault, the faulty conveyor / equipment, as well as the preceding conveyors / equipment in the interlock sequence, will stop except H.T. motors for which only scoop coupling will be disengaged and motor will continue to run for process fault. In case of motor fault, H.T. motor will trip but the succeeding conveyors / equipment will continue to run. The status indication against the preceding conveyors / equipment will start slow blinking while the faulty conveyor / equipment will be fast blinking.

Start command shall not be initiated unless reset button in pressed after clearance of fault.

The sequence of operation of the annunciation system shall be as follows:-

CONDITION			STATUS	
	I			
Normal :	Ann. Window	:	Off.	
	Status indication	:	Steady glow	
	Buzzer	:	Off.	
Fault :	Ann. Window	:	Blinking.	
	Status indication	:	Fast blinking	
	Buzzer	:	Sounding.	
Press Accept. PB.	Ann. Window	:	Steady glow.	
	Status indication	:	Fast blinking	
	Buzzer	:	Off.	
Press Reset PB (When	Ann. Window	:	Off.	
fault is cleared):	Status indication	:	i)	Steady blinking (if on selected path)
			ii)	Off (if not on selected path)
	Buzzer.	:	Off.	

4.09.00 **Metal detectors**

(a) It shall be possible to start the conveyors only after energizing the metal detector and 'Metal detector reset' condition. Once the metal is detected, the corresponding conveyor shall trip.

It shall be possible to restart the conveyors, after local resetting of metal detector and putting back the marker bag in position. Metal detector ON/OFF push buttons shall be provided in main control room also.

(b) In case of tripping of conveyor system, metal-detector shall get de-energized after a time lag.

(c) Following individual indications shall be provided on local control panel.

(1) Metal detector 'ON'

(2) Metal detected

(3) Metal detector 'reset'.

(4) Metal detector faulty.

4.10.00 **Limestone Sampling system**

(b) Lime Stone Sampling Unit shall be controlled through main Lime Stone handling plant DDCMIS. Controls and interlocks for proper material flow shall be provided similar to conveyor system. Mimic shall be provided in the Operator Work Station (OWS) at main LHP control room.

(c) Only one start/stop push button along with selector switches for various modes of operation of Lime Stone sampling system shall be provided for automatic operation of complete Lime Stone sampling system. This control facility shall be provided at main LHP control desk as well as locally. In any case, local push button stations shall be provided for all individual equipment of Lime Stone sampling system near the equipment.

(d) All necessary automatic controls shall be provided for meeting the requirements of ASTM-D-2234.

(e) Following indications shall be provided on local control panel

(1.) System ON/OFF/TRIP

(2.) Primary cutter stuck up between parking positions.

(f) In case of primary cutter getting stuck between parking positions, preceding conveyor shall trip and annunciation shall appear at Main LHP Control room.

(f) There shall be protection in the primary Lime Stone sampler to trip the conveyor belt in case primary sampler falls on running conveyor due to coupling failure etc.

(g) Individual motor ON/OFF/TRIP indications shall be provided at main LHP control room.

4.11.00 **Travelling Trippers**

(a) Mobile tripper unit shall be locally controlled from the operating platform suitably located with the unit as per instructions given from main LHP control room.

(b) End travel limit switches shall also be provided.

(c) Travel drive motor shall start only when brake and rail clamps are in disengaged condition.

(d) It shall be possible to trip the bunker Conveyors from tripper.

(e) When the last bunker is full, it shall not be possible to change over the tripper flap gate from bunker feeding position to last bunker feeding position.

(f) As soon as the bunker conveyor trips, tripper flap gate shall change over its position after a time lag.

(g) Two nos. emergency stop button one on each side shall be provided on tripper to stop the machine at any position. The control unit on tripper shall be provided with start / stop push button and indication lamp for travel / gate. The tripper brakes and rail clamps shall be energized (and released) when the tripper motors are ON and the brakes will be applied when the travel motors are OFF. Two travel limit switches shall be provided at either end of tripper carriage for limiting the travel drive between two ends of the track. The first one shall be normal limit and the second one for over travel limit. In addition to above, position indication for bunker position of tripper will be provided in Main control room. Necessary position encoders/limit switches shall be provided.

(h) Following individual indications shall be provided on local control panel

(1.) Motor ON/OFF/TRIP

(2.) Brakes applied

(3.) Rail clamps applied

(4.) Flap gate position

(i) Indication of tripper flap gate positions shall be given in the main LHP control room.

(j) It shall be possible for operator to manually trip the Lime stone feeding equipment viz. paddle feeders or tripper.

(k) Chute blockage switch shall be provided at each leg of chute and shall trip the tripper conveyor in case of blockage.

4.12.00 **Flap Gates**

All Flap Gates shall be motorised with remote controlled from the main control desk. Their position shall be indicated on the mimic of main control room.

4.13.00 **Belt Weighers**

Each belt scale shall give output to DDCMIS for display of flow rate indicator and totalizer on TFT and print out at main LHP control room. Each belt scale shall also have rate flow indicator and totaliser mounted near the unit.

4.14.00 **Magnetic separator / Suspended Magnet**

It shall be possible to start the conveyor only after energising the magnet of ILMS or SM. Further, if conveyor system trips magnetic separators shall get de-energised after a time lag and suspended magnet will remain energised and can be de-energised locally. Also if drive motor of cleated belt of ILMS trips, magnetic separator shall not get de-energised, but conveyor system shall trip and audio-visual annunciation shall appear at main LHP control room.

Following individual indications shall be provided on local control panel

(a.) Magnetic separator ON.

(b.) Incoming supply ON

(c.) 'Under current relay' operated

(d.) Cleated belt motor ON/OFF/TRIP

(e.) Oil temperature high

4.15.00 **Service water, Cooling Water and potable water pumps**

(a) These pumps shall be started from main LHP control room

(b) Pump shall trip in case of low water level in tank.

(c) Following individual inputs shall also be provided to DDCMIS system for alarms/indications :

(1.) Motor ON/OFF/TRIP

(2.) Discharge water pressure low

(3.) Water level low in tank

(4.) Water level high in tank

4.16.00 **Summary of control philosophy**

Contractor shall furnish summary of control philosophy indicating permissive, trip and interlock conditions for each drive/equipment. It shall clearly list all permissive conditions (conditions required to start the drive), all the trip/protection conditions and each auto start/open and auto stop/close condition for each drive/equipment.

The sequential start-up and shut-down steps for a group of drive/equipments shall also be described clearly.

The above summary conditions shall be comprehensive to include all process conditions and shall be elaborated in clear and unambiguous way, and shall include tag numbers of devices and equipments.

This system shall be controlled through FGD Control Room (FGD Control system). In case any RIO is required for the lime stone handling system then the same shall be provided by the bidder and it shall connected to FGD Control System.

4.17.00 Logic Diagram

The contractor shall furnish comprehensive logic diagram showing all interlock, protection, sequence and alarm requirements of complete system to the employer during detail engineering stage. In this logic diagram, tag number corresponding to I/O list and drive list shall be clearly indicated. The format of this logic diagram shall be informed by employer during detail engineering. The recommended logic and write-up shall match fully.

A-02: PADDLE FEEDER

1.00.00 GENERAL

Paddle Feeders shall be supplied and erected complete with rails including necessary supporting structures, approach/maintenance platforms with hand railings and ladders, cable reeling drums with trailing cable, cable trays, all electricals including machine mounted local control panel.

Codes & Standards

The design, manufacture, inspection and testing of Paddle Feeders shall comply with all the currently applicable statutes, regulations and safety codes in the locality where the equipment is to be installed. The Paddle Feeders shall conform to the latest edition of the Indian standards and codes. Other internationally acceptable standards/codes, which ensure equal or higher performance than those specified, shall also be accepted. Nothing in this specification shall be construed to relieve the contractor of the required statutory responsibility. In case of any conflict in the standard and this specification, the decision of the Employer shall be final and binding.

1.01.00 DESIGN REQUIREMENT

Travelling paddle feeders of self-contained, self-propelled design shall be furnished and erected to scoop out limestone from the hopper and each feeder shall be capable of travelling back and forth along the entire length of the hopper and transfer the limestone from the hopper uniformly onto the conveyors below. Each paddle feeder shall have capacity to scoop out limestone at the guaranteed capacity in both forward and reverse motions with no indication of wheel slipping (water tank full). Each paddle feeder shall be designed for guaranteed capacity while handling entire range of lump sizes.

It shall operate on the principle of positive discharge and shall not depend on friction or moisture content.

The Paddle wheel shall be driven by a stepless hydraulic drive. Carriage travel shall be achieved through electric motor gearbox (2 speed) and flexible coupling or through hydraulic drive **or electric geared motor (2 speed).**

All equipment shall be designed to withstand any rate of acceleration imparted by drives or any strain resulting from a sudden change in load. Further, the design of paddle feeder carriage should be such that it does not run off from its rails due to sudden change in load or other reasons.

The Contractor shall include in his proposal necessary electricals for paddle feeder and carriage such as motorized cable reeling drum with trailing cables, and end limit switches for protection against over travel of the feeder carriage. Two separate cable reeling drums one for Power cable and one for Control cable shall be provided for each machine. The cable reeling drum and trailing cable of each feeder shall be suitable for the entire length of the hopper upto maintenance bay. Mechanical track stops along with buffers on each end of rails and on paddle feeders shall also be provided. For specification of dust suppression equipment for paddle feeder, refer relevant Sub-section of this Specification.

For designing the paddle wheel as well as travel drive, Contractor shall consider the hopper fully loaded with limestone on either side of the paddle wheel to the maximum capacity. The hydraulic system normal average working pressure shall be selected considering the above loading condition. Further hydraulic system shall be designed to stall / trip beyond a certain pressure above the normal average working pressure. The minimum margin between the normal working pressure and the stall / trip pressure shall be 50%. The maximum working pressure for the hydraulic system in Hydraulic Power Pack shall not be more than 210 bar.

Feeder carriage drive shall be suitably designed so that the forward & reverse movement of carriage can be achieved without stopping the scooping operation.
Rail structure shall be designed considering two-wheel support and accounting no frictional force from the other two wheels and considering hydraulic motor stall condition.

For selection and specification of drive motors (other than the hydraulic motor), gearboxes, all types of couplings associated with paddle feeder and other equipment, relevant sections of this specification shall be referred to.

Contractor's design of paddle feeder should not incorporate a separate loading table (impact cradle) below the paddle feeders. However, the height of fall of limestone between paddle wheel and conveyor belt shall be kept minimum. Hydraulic components shall be provided with dust proof cover for protection against spillage of limestone dust. Pressure /Temp. gauges shall be located at convenient locations for continuous observation by operator. Proper oil level gauge to be provided at hydraulic oil reservoir tank.

Three (3) pairs of Control cables shall be provided in the control trailing cable of each machine for connecting Employers telephone and P.A. equipment to be provided on each machine.

For Hydraulic system, in case the oil temperature is high then proper external cooling is to be provided , viz, heat exchanger, before the oil returns back to the oil tank.

1.02.00 CONSTRUCTION REQUIREMENT

The paddle feeders shall run on rails mounted on the supporting structures of associated conveyors. Both paddle feeder and carriage drives shall be mounted on the feeder carriage.

The paddle feeder wheel shall comprise of suitable numbers of vanes with cutting edges. The vanes shall be of high strength steel construction with removable tiscral or equivalent liner plates. Vanes shall be easily removable individually. Tip of the vane shall reach inner most point of hopper table.

The feeder carriage shall be of steel construction and of robust design. Skirt plates shall be provided integral with the equipment for collecting the material drawn by the paddle feeder from the track hopper and discharging on to the conveyor belt. Feeder skirts of paddle feeders shall be extended at least by 500 mm on either side of the paddle wheel to avoid spillage of limestone.Necessary baffle/retainer plates for suitably guiding the flow of limestone from reclaim hopper to the reclaim conveyor

being fed by paddle feeders shall be provided. Hand railing shall be provided on the top deck of feeder carriage together with an access ladder.

The feeder carriage shall be provided with suitable number of double flange wheels of steel construction, complete with sealed bearing unit. The drive mechanism shall be suitable for continuous reversible motion of the carriage. Start/stop switches shall be provided at the local control panel for the operation of paddle wheel and feeder carriage. The carriage shall automatically reverse its motion, when two paddle feeders operating on the same track come within a predetermined distance. Suitable anti-collision device (infrared and mechanically operated limit switch type) shall be provided. Provision shall be made to trip the track hopper conveyor from respective paddle feeder and provision shall be made for tripping of paddle feeder from CHP main control room.

Rope actuated stop switches shall be provided along the travelling structure for emergency use.

Suitable indication of paddle wheel 'rpm' shall be provided on the paddle feeder control panel and flow rate indicator of belt weigh scale shall also be duplicated on control panel of paddle feeder. Operating controls shall be mounted at a suitable height such that it can be operated from walkway. Encoder shall be provided on the paddle feeder to give 4-20 mA. Signal to the DCS to the exact location of the machine.

Suitable rail cleaners shall be provided at the leading as well as trailing side of the feeder carriage for both tracks.

Suitable cable trays/troughs shall be provided along the travel of paddle feeder for supporting and guiding the trailing cables. In order to save flexible cables from damage due to tension/over-tension protection switches shall be provided. Isolating switch to isolate the power supply to the machines shall be provided in each power JB to be located at the center of travel length.

Various equipment of Paddle Feeder assembly shall be easily accessible. It shall be possible to replace electrical, mechanical and hydraulic components of paddle feeder when positioned at hopper. Various drive equipment and hydraulic/other components shall be so arranged that limestone spillage from reclaim hopper mouth does not accumulate near/over them.

Provision shall be kept for automatic tripping of conveyor in the event of paddle feeder getting dragged (i.e. travel speed in excess of rated speed). Paddle feeder once tripped due to jamming or operation of emergency push button, shall not start unless the hydraulic pressure is back to "normal".

Paddle feeders rails should be mounted on continuous running member. The splicing of rails shall necessarily be at vertical support location only. Splicing in between vertical support will not be accepted.

1.03.00 The longitudinal distance between two vertical supports shall be 3000 mm (min.)

DATA SHEET – PADDLE FEEDER

1.00.00	**GENERAL**	
1.01.00	Type of paddle feeder	Mobile, Rotary plough
1.02.00	Input limestone parameters	As described elsewhere in the specification
1.03.00	Location	Underground below hopper
2.00.00	**DESIGN & CONSTRUCTION**	
2.01.00	Paddle Wheel	
2.01.01	No. of paddle wheel vanes	Suitable
2.01.02	Material for Vane liners	TISCRAL / equivalent (Replaceable)
2.02.00	**Drive Arrangement**	
2.02.01	Paddle Wheel	Stepless Hydraulic drive
2.02.02	Feeder Carriage & flexible coupling	Electric Motor with gear box or hydraulic drive or **electric geared motor.**
2.02.03	Minimum No. of starts per hour for drive chain equipment	15 Starts/hour (with minimum 10 consecutive starts)
2.02.04	Paddle wheel speeds	Stepless variable
2.03.00	**Paddle Feeder Rails**	
2.03.01	Size	90 lb/yard

2.03.02	Support Arrangement	To be mounted on supporting structure of conveyors with continuous support below rail.
2.04.00	**Feeder Carriage wheels**	
	(i) Nos.	Suitable
	(ii) Type	Double Flange
	(iii) Bearings	Sealed type
2.05.00	Anti Collision Device	Mechanical and Infra red type
2.06.00	Cable Tray Height & width	Min. 300 mm above floor & 300 mm wide all along the length of track hopper on both sides.
2.07.00	Control	Local
2.07.01	**Location of Control Panel**	On the feeder carriage
2.08.00	Idlers for conveyor Belt	As per relevant Sub-section for Belt conveyor system
2.08.01	Spacing of carrying idlers in the loading zone of paddle feeders	600 mm (maximum)
2.09.00	Chute work and hopper	20 mm thick TISCRAL or eqvt.

A-03: BRAKES AND CLAMPS

1.00.00 GENERAL

Brakes shall be provided for decelerating of driven equipment/conveyors as per requirement.

Rail clamps shall be provided for various mobile machines traveling on rails.

1.01.00 STANDARDS

The design, manufacture, inspection and testing of Brakes & Clamps shall comply with all the currently applicable statutes, regulations and safety codes in the locality where the equipment is to be installed. The Brakes & Clamps shall conform to the latest edition of the standards and codes. Other internationally acceptable standards/codes, which ensure equal or higher performance, shall also be accepted. Nothing in this specification shall be construed to relieve the contractor of the required statutory responsibility. In case of any conflict in the standard and this specification, the decision of the Employer shall be final and binding.

1.02.00 DESIGN REQUIREMENT

1.02.01 Electro Hydraulic Thruster Brakes/Disc Brakes

The necessary Electro Hydraulic Thruster (AC) brakes / disc brakes, totally enclosed and fail safe, shall be provided as required for various equipment's. Braking torque shall be adjustable from 0 to 100% of rated braking torque. The thruster brake shall be actuated by compression springs.

1.02.02 Clamps

1.02.03 Electro-hydraulic thruster and manual rail clamp shall be designed for holding the machine stationary.

1.02.04 Electro-hydraulic thruster shall be actuated by compression springs; the spring shall apply the clamping force directly on the Rail clamp mechanism once power supply is cut-off. The force transmission mechanism from spring to rail clamp faces shall be very simple with minimum linkages. Manual rail clamps shall be provided with positive locking arrangement and shall apply clamping force directly on rails. The manual rail clamp shall be of proven design.

1.03.00 CONSTRUCTION REQUIREMENT

1.03.01 Thruster Brakes

1.03.02 The electro hydraulic thruster shall be fitted with the brake. Limit switches shall be provided for brake applied/released positions. The windings shall be provided with class-B insulation suitable for 415V ± 10% at 50 Hz ± 5% and combined variation of ± 10%. Brake lining shall be asbestos with inter woven brass wires capable of withstanding 200°C temperature.

1.03.03 Clamps

1.03.04 Electro Hydraulic thruster shall be fitted directly above spring.

1.03.05 Rail clamp shall be provided between the two travel wheels. Further, limit switches shall be provided for Rail clamp 'ENGAGED' and 'DISENGAGED' signals.

1.03.06	Minimum clearance between the Rail clamp face and rail surface shall be 50mm. However, this clearance may not be uniform for both the faces of Rail clamp throughout the length of rails. Rail clamp shall operate satisfactorily under this condition without the need for any adjustments.
1.03.07	In addition to electro hydraulic thruster clamps, separate manual clamps traveling tripper shall also be provided.

DATA SHEET: BRAKES AND CLAMPS

1.0.0	**GENERAL**	
1.1.0	Brakes	(i) For decelerating of conveyors & rotating equipment's. (ii) Brakes are mandatory for H.T. drives involving scoop type coupling except crusher motor.
1.2.0	Rail Clamps	For various mobile equipment travelling on rails.
2.0.0	**DESIGN & CONSTRUCTION REQUIREMENT**	
2.1.0	**Brakes**	
2.1.1	Type	Electro Hydraulic Thruster brakes A.C. operated or Disc brakes.
2.1.2	Braking Torque	Adjustable from 0 to 100% of rated braking torque.
2.1.3	Brake Shoes	Operated directly by spring
2.1.4	Shoe lining	Asbestos with interwoven brass wires.
2.1.5	Max. Temperature for shoe lining	200 degree C.
2.1.6	Thrustor	Class-B insulation, IP-65 protection.
2.2.0	**Clamps**	
2.2.1	Rail Clamp support	Independent from the rails.
2.2.2	Limit Switches	"ENGAGED" & "DISENGAGED" signals.
2.2.3	Clearance between Rail clamp face & Rail surface	Minimum 50 mm
2.2.4	Material for Rail clamp Mechanism	Forged steel
2.2.5	Thruster	Class-B insulation, IP-65 Protection
2.2.6	Type	Electro hydraulic thruster, manual

A-04: MONORAILS AND HOISTS

1.00.00 GENERAL

Suitable handling arrangements shall be provided for all equipment's included in Contractor's scope to transfer the equipment to maintenance area within the building and/or to transfer the equipment outside the building upto ground level for further transportation by the Employer. For this purpose Contractor shall provide monorails and hoist blocks with cross travel facility.

1.01.00 CODES AND STANDARDS

The design, manufacture, inspection and testing of Monorails and Hoists shall comply with all the currently applicable statutes, regulations and safety codes in the locality where the equipment is to be installed. The Monorails & Hoists shall conform to the latest edition of the following standards & codes. Other internationally acceptable standards/codes, which ensure equal or higher performance than those specified, shall also be accepted. Nothing in this specification shall be construed to relieve the contractor of the required statutory responsibility. In case of any conflict in the standard and this specification, the decision of the Employer shall be final and binding.

IS:3938 : Specification for Electric Wire Rope Hoist

IS:3832 : Chain pulley blocks

IS:2429 : Round steel short link chain

IS:6216 :Short link chain grade 80

IS:8610 :Points hooks with shank for general engineering purposes

IS:210 : Cast Iron Castings

1.02.00 DESIGN REQUIREMENTS

For the Hoists with more than 2.0 tonne lifting capacity or more than 10.0 M lift, with the exception of hoists for GTU and bend pulleys motor operated hoist blocks for both long travel and lift shall be provided. Other hoist blocks shall be of hand operated type for both travel and lift. Minimum 3 meter length of Cantilever from edge of building/cladding, shall be provided in monorails coming out of the building to lower the equipment to ground level clearing the building sidewalls / cladding and any other facilities beneath the floor upto ground level.

The exact lift/travel and the number of the hoisting mechanisms and the mode of lifting equipment's to various floors of the buildings shall be as decided by the employer at the time of detailed engineering. Clear height shall be maintained when handling one equipment over other, in such case dismantling of any equipment shall not be permitted. The center line of monorail shall not deviate by more than 500 mm from the center of gravity of any equipment that is to be lifted. Contractor shall take clear note of the fact that the number and monorail hoisting systems shall also be decided considering the movement of the equipment being lifted over/by the side of other equipment's without removing the later. The necessary levels of floors in various buildings shall be decided considering the above requirement.

Monorails shall be extended outside the building to handle the equipment to ground level. For monorail/hoist routed inside the buildings, suitable machinery well and

removable handrailing and grating shall be provided on various floors of buildings, as necessary, to handle the equipment.

Electrically operated monogirder type hoists shall consist of following major components.

(a.) Electrically operated trolley complete with drive motor (Trolley travel speed maximum 15 m/min.).

(b.) Hoist cable, hoisting block and hooks complete with drive motor (Hoisting speed maximum 6m/min.).

(c.) Limit switch to prevent overhoisting, over lowering and over travel.

(d.) Festoon arrangement of feeding power to trolley assembly.

(e.) Erection hardware.

(f.) Pendent control station suspended from hoist.

(g.) Control panel mounted on wall.

The electric hoist shall be designed and constructed in accordance with the latest revision of IS:3938 and shall be suitable for duty class 2.

For electric hoists, trolley movement and hoisting shall be effected by using two separate motors. Motors shall be as per technical requirements discussed elsewhere. However the motors shall be suitable for 150 starts per hour at 40% CDF.

Trolley for motorized / manual cross travel shall be designed to accommodate a wide range of I beams and shall be capable of travelling on straight as well as curved monorails with the design being such to maintain uniform distribution of pressure on the flanges.

Motor operated geared trolley shall have two (2) pairs of wheels, one pair of which shall be driven through motor.

Wire rope shall be of pre-formed type, hemp cored, regular lay 6/36 construction with a breaking strength of 160 -175 kgf/ sq. mm. Reverse bend of ropes is not acceptable. Minimum number of falls of rope shall be four (4).

All gears and pinions shall be of hardened and tempered steel with machine cut teeth in metric modules. Surface hardening of steel is not acceptable.

All running shafts and wheels shall be fitted with ball / roller bearings with a rated life not less than 20 years based on equivalent running time as per IS:3938.

An electromechanical brake shall be provided for hoisting as well as cross travel. Brake lining shall be of asbestos.

Cast iron parts, wherever used, shall be of minimum grade 30, IS:210.

All chain pulley blocks shall be designed to IS:3832, the operating hand chain shall conform to IS:2429 grade 30 pitched and polished and the load chain to IS:6216

grade 80. The chain pulley block shall be suitable for duty class 2. Hooks shall be as per IS: 8610 & with antifriction bearing.

All hoists/chain pulley blocks shall be selected to have minimum headroom and shall be selected to lift heaviest piece of equipment. Further, it shall be possible to handle any equipment without disturbing other equipment.

The hand chain wheels shall be of cast steel, the wheels shall be with flanges and designed to ensure effective operation of hand chain. Further, suitable local brake shall be provided as per IS:3832 to arrest and sustain loads in all working positions.

The velocity rates, effort on chain required to raise the safe working load and travel and speed shall be within the limit specified in IS:3832. Proof load test shall be carried out as per IS:3832. Balance requirements shall be as discussed in earlier clauses pertaining to electric hoists.

Hoist for Gravity Take up arrangement and bend pulley.

For handling bend pulley, take-up pulley and counter weights following hoisting arrangement shall be provided:

(1) For handling bend pulleys, hooks of adequate capacity shall be provided at the top of gallery. Further minimum four (4) nos. manually operated chain pulley blocks of adequate capacity shall also be provided for the entire Lime Stone handling plant for handling bend pulleys.

(2) For handling take-up pulleys, manual hoist along with mono rail beam of adequate capacity having cross travel, arrangement shall be provided at bottom of gallery to handle take-up pulley only of conveyors.

(3) For handling take-up weight, a separate manual hoist with mono rail beam of adequate capacity shall be provided to hold complete counter weight (inclusive of all counter weight blocks). This hoist shall be provided for holding the counter weight and shall be located in the zone of counter weight travel.

1.03.00 CONSTRUCTION REQUIREMENT

The hoist mechanism shall consist of a grooved rope drum driven by electric motor through gears. Each end of the rope shall be anchored to the drum in such a way as the anchorage is readily available for maintenance. Each rope shall have two (2) full turns of the drum when the hook is at its lowest position and one (1) spare groove when the hook is at its highest position. The leading rope taken by the drum should not slope sideways when slack and it should not be caught between the gear wheel.

Rope drum, gear box, block etc. should be fabricated out of weldable quality steel.

Trolley wheels shall be of single flange type in the taper treads. The wheels shall be mounted on antifriction bearings and shall be easily removable for repair/ replacement.

The load hook shall be swiveling type forged circular shank section and shall confirm to IS:8610.

	All gears and bearings shall be lubricated by grease. All lubricating points shall be grouped together in easily accessible position. The bottom block shall be of enclosed type and shall have guard against rope jamming in normal use. It shall have standard forged swivel shank hook fitted on antifriction thrust bearing. Lock to prevent hook from rotation and locking arrangement to prevent accidental unlocking shall be provided. Pulley of the bottom block shall be provided with antifriction bearings. All parts requiring replacement/inspection/lubrication shall be accessible without need for dismantling of other parts/structures. All components of hoists of identical capacity and duty shall be interchangeable. Hoists shall have permanent inscription in English on each side readily recognizable from floor level stating safe working load. Pendant shall be provided with flourscent up/down/forward/reverse travel push buttons and indicating lamps. Its power supply shall be limited to 24V AC. The control panel shall be wall mounted type & easily approachable from the floor by a standing man. For Inspection / maintenance of hoist components a fixed platform (of min 1.5 x 1.5m) with ladder shall be provided for each electrical hoist.
1.03.13	Inline magnetic separator shall have motorised hoist for handling / maintenance purpose. Each suspended magnet shall be provided with a dedicated motorised trolley.

A-04: DATA SHEET: MONORAILS AND HOISTS

1.0.0	**GENERAL**		
1.1.0	Functional Requirement	:	To transfer equipment's to maintenance area or outside the building.
2.0.0	**DESIGN & CONSTRUCTION REQUIREMENT**		
2.1.0	**Hoists**		
2.1.1	Drive		
	(i) More than 2.0 tonne or more than 10.0 m lift or hoists coming out-side the buildings		Motor driven for both travel & lift.
	(ii) Other hoists including the hoists for handling takeup pulley and takeup weight		Manual for both travel & lift.
2.1.2	Maximum trolley travel speed for electric hoists		15m/min
2.1.3	Maximum Hoisting speed for electric hoists		6 m/min
2.1.4	Drive Motors		SQIM, Separate for travel & lift
2.1.5	No. of starts for drive motor		150 starts/hr at 40% CDF
2.1.6	Wire Rope		
	(i) Type/Construction		Pre-formed type, hemp cored, regular lay 6/36 construction
	(ii) Breaking Strength		160-175 kgf/sq. mm
2.1.7	Bearing		
	(i) Type		Ball/Roller bearing
	(ii) Life		20 years
2.1.8	Brake		Electro Mechanical type with asbestos lining.

2.1.9	Load Hook	Swiveling type forged circular shank section.
2.1.10	Duty	Class –2
2.2.0	**Monorail location/layout**	
2.2.1	Cross section	I beam
2.2.2	Distance between C/L of monorail & C.G. of equipment to be lifted	Maximum 500 mm
2.2.3	Power Cables Support	Festoon type arrangement
2.3.0	**Manual Hoists**	
2.3.1	Maximum manual effort for operation.	30 Kg

A-05: CHUTES AND HOPPERS

1.00.00 GENERAL

1.01.00 Chutes & Hoppers, flap gates and rack & pinion gates shall be furnished integral with Limestone & Gypsum handling system being supplied. All necessary accessories, electricals etc. shall be provided to ensure proper flow/storage/bifurcation of Lime Stone as per system requirements.

1.02.00 CODES AND STANDARDS

The design, manufacture, inspection and testing of Chutes & Hoppers shall comply with all the currently applicable statutes, regulations and safety codes in the locality where the equipment is to be installed. The chutes, hoppers shall conform to the latest edition of the following standards and codes. Other internationally acceptable standards/codes, which ensure equal or higher performance than those specified, shall also be accepted. Nothing in this specification shall be construed to relieve the contractor of the required statutory responsibility. In case of any conflict in the standard and this specification, the decision of the Employer shall be final and binding.

IS:4682 :Code of practice for lining of vessels and equipment for chemical processes.

IS:2062, Minimum grade E 250 : Structural Steel (Standard Quality)

IS:11592 : Code of practice for selection and design of Belt Conveyors.

1.03.00 DESIGN AND CONSTRUCTION

1.03.01 **Chutes, Hoppers**

The minimum valley angle of chutes shall be 60 degrees from horizontal for limestone and 70 degree for gypsum

Transfer chutes shall be adequately sized and sloped to ensure smooth flow of limestone without any accumulation anywhere.

Complete chute work above the drive floor for conveyors provided with 'In-line belt magnetic separators' shall be of 10 mm thick SS - 304 in the zone of magnetic field.

Direct impact of material on conveyor belt shall be avoided by providing an inclined surface at 60/70 degrees valley angle at the feeding point to guide the material in the direction of belt travel. Further, chute construction below flap gate shaft shall be such that there will not be any accumulation of limestone dust between chute and flap gate in that zone.

Hoppers and Chutes shall be made of minimum 20 mm thick TISCRAL / SAILHARD / LSLAS07 or equivalent material. Long chutes guiding flow from considerable height shall be provided with impact plates wherever change in direction of flow takes place. Hinged inspection doors of leak proof construction shall be provided for access/ maintenance purpose, at approachable heights for chutes and flap gates. All chutes should have one inspection door at every floor and for the ones in between the floors (more then 1.5 meter above the operating floor level) suitable access for trouble free maintenance shall be provided. For sealing of inspection doors labyrinth

type arrangement to be provided. In addition to positive locking arrangement, mounting bolts, to tighten the door further against rubber shall also be provided.

Bottom side of the chutes on which the limestone slides shall be welded to the side plates to form a trough. Bottom sides along with its adjacent sides shall be flanged and made from TISCRAL or equivalent material of 20 mm thickness. The non-striking surface i.e. the covers of the trough shall be of 10 mm thick mild steel and bolted to the flange provided on the trough. Inside welding shall be provided in the corners for permanent sealing. Further, the chute boxes not more than 1.5 m in length shall be joined through bolted flange connection to form the chute legs. Adequate care shall be taken to locate the flange joint away from floor level for easy maintenance.

Bolted flange joints shall be of dust tight construction and necessary sealing material shall be provided in all the flange connections for adequate sealing.

Complete chute work in the region of flap gates shall be fabricated from 20 thk TISCRAL or equivalent. In case of vertical chute (valley angle more than 80 degree) complete chute, work shall be of 20 mm thick TISCRAL or equivalent material. While finalising the chute work inside the building, arrangement for shifting and replacing chute legs, proper handling arrangement/wall openings, trolleys, hoists shall also be provided. While fabricating the chute, no welds in between shall be allowed.

Hoods over the conveyor head pulleys shall be made of suitably stiffened minimum 4 mm M.S. Plates and shall be provided with hinged and gasketed inspection doors with suitable access to them. Further, serrated rubber seal shall also be provided at the very inlet of head chute to minimize dust nuisance.

Separate maintenance sealed door shall be provided for access to belt cleaners in head pulley hood, flap gates for maintenance and inspection doors shall be of hinged with positive locking facility.

1.03.02 (a) There should be sufficient clear space to install, remove and maintain scrappers without cutting structures.

(b) Slope of plates below scrappers to direct Limestone scrapped by these to the main stream shall be 60° min.

1.04.00 Skirt Boards

Skirt board shall ensure centralised loading of conveyor belt to avoid limestone spillage. Suitable 'Skirt Plates' shall be provided for entire feeding chute and shall be extended min. 3 m ahead of front edge of chute & 500 mm beyond rear edge of chute. The width of the Skirt Boards shall be two-third the conveyor belt width. In the belts where limestone of appreciable lump size (250 mm) is being conveyed, the gap between the bottom of the skirt board and the belt shall be made to increase uniformly in the direction of belt travel. The height of the skirt boards shall be sufficient to contain the material volume as it is loaded on the belt and shall not be less than 750 mm. The skirt plates shall be fitted with modular segmented and replaceable rubber skirting pads having facility of adjusting the pressure on the belt conveyor and shall have provision of on line removal for the purpose of easy maintenance. Such segmented rubber pads with its holding down adjustment arrangements shall be of proven design. The thickness of skirt rubber shall be

minimum 25mm for side skirt and 32mm for rear skirt. The edges of segmented pads shall be installed at an angle for providing a better seal. The backing plate shall have a minimum thickness of 10mm. Rubber blocks are to be held in position and supported by serrated clamp and bolts. These clamps should provide only unidirectional movement to the rubber block against wear. All care shall be taken while designing, to combine good sealing with minimum belt wear.

1.05.00 **Flap Gate**

The motor operated 2 position flap gates shall be provided in transfer chutes as specified and shall be complete with electrically operated actuators. The gates shall be of robust construction and suitable for trouble free operation. The face of the flap gate shall be made out of 20 mm thick TISCRAL or equivalent material.

The equipment shall be capable of being operated for at least 15 switchings per hour at rated load and thrust and shall be suitable for 10 Nos. consecutive switchings at rated load and thrust.

The motor rating for the actuator shall be so selected as to provide sufficient thrust for operation of the flap gates against the moving weight of limestone and/or flap gate. The flap gate travel shall be 60 deg. The motor shall be completely dust tight.

Lever arm shall be provided between actuator and flap gate shaft for obtaining required thrust.

The actuators shall be capable of preventing any over travel. Suitable travel dependent limit switches controlling the travel of the flap gates on either direction shall be furnished. These shall be placed internal to the drive unit and shall be completely dust-proof. The limit switches shall be capable of adjustments to vary the total length of travel of the gate

Suitable thrust dependent limit switches shall be provided in the actuator, which shall trip off the actuator motor in case of excessive thrust due to jamming of the gates during its travel in either direction. The same shall also be integral to the drive unit and shall be dust proof.

Provision for alternative manual operation shall also be made using declutchable hand wheel. The diameter of hand wheel shall be selected considering convenient force to be applied by a single operator. However, minimum diameter of hand wheel shall be 500 mm. Limit switch for safety of person operating the hand wheel shall be provided. Manual effort required to operation the flap gate shall not exceed 25 kg.

All the two way chutes, one way of which is leading towards the future conveyor shall be provided with blind flange.

All the actuators in the plant should be selected based on heaviest loading, but the rating shall not be less than 3500 kg with a lever arm of 1.0 m in any case.

Suitable stiffening arrangement shall be provided between the two faces of the gate plate. At the end of the travel the total length of edge of the flap gate shall rest on a suitable projected surface from chute to prevent leakage of limestone dust through the available clearance between chute and flap gate.

Maximum feasible counterweights shall be provided for better utilisation of system. However, for calculation of thrust required, the benefit of counterweight shall not be taken into considerations.

Suitable self aligned double row ball bearings in dust tight housing shall carry the gate shaft. Suitable provision for regreasing shall be provided.

For standardization purposes, only one standard type of actuator for flap gates shall be provided. The standard type actuator shall be selected for maximum thrust as calculated for various locations. Flap gate actuator as a whole and individual component wise shall be completely interchangeable for all locations.

The material of shaft shall be EN-8 or equivalent. The diameter of the shaft shall be suitable for motor stalled condition and associated twisting.

Approach/maintenance platforms complete with the chequered plate floor, hand rails, ladders etc. shall be provided for all flap gates. The platforms shall be extended for access to dust & debris chute inside buildings.

Shaft & flap gate shall be tightly fitted to each other.

Flap gate actuator shall be supported from floor/platform, not from chute body except for traveling tripper.

1.06.00 Rack & Pinion Gates

Rotary actuator operated rack and pinion gates shall be provided at various locations as specified. The gate shall be mounted such that limestone load does not act vertically on gate Suitable manually operated rod gates shall be provided over rack and pinion gates for their easy operation and maintenance. The rack and pinion gate shall be guided properly and suitable rollers with bearings sealed for life and dust proof shall be provided. The rack and pinion gates shall be of mild steel construction with liner plate of 10 mm thick TISCRAL or equivalent material. The gates shall be operated by means of double rack and pinion. The material for rack & pinion wheel shall be cast steel and shaft shall be EN.-8.Provision for alternative manual operation of motorized rack and pinion gates shall also be made. Limit switch for safety of person operating the hand wheel shall be provided. Manual effort required to operate the rack and pinion gate shall not exceed 25 kg.

A-05: DATA SHEET: CHUTES AND HOPPERS

1.0.0	GENERAL	
1.0.1	Limestone Parameters	As specified elsewhere
2.0.0	**DESIGN & CONSTRUCTION**	
2.1.0	**Chutes & Hoppers**	
2.1.1	Minimum Valley Angle	60 degrees for limestone 70 degree for gypsum
2.1.2	Material :	
	(a) Chute work	
	Sliding zones & adjacent sides	20 mm thk. TISCRAL / equivalent
	No striking/ Non sliding zones	10 mm thk MS
	Chute with valley angle 80 degree and above	All four sides of 20 mm thk. TISCRAL/equivalent material
	In the zone of magnetic field of ILMS (chute above floor over which ILMS is suspended)	SS-304 10 mm thk.
	In the zone of flap gates	20 thk TISCRAL/ equivalent material
	Discharge Hoods over head pulleys	4 mm thk M.S. with rubber curtain
2.1.3	Inspection Doors	Hinged & leak proof construction (min. size 350 x 450 mm)
2.1.4	Chute Construction	
	(a) Corners	One face of removable bolted flange connection
	(b) Joints Bolted	Flange joints of dust tight construction
	(c) Bolt size	Min. M-16

		(d) Bolts spacing	Not more than 125 mm C/C
		(e) Fixing Arrangement	Bolts with plain spring washers
	2.2.0	**Skirt Boards**	
	2.2.1	Length	Entire feeding chute and shall be extended min. 3m ahead of front edge of chute & 500mm beyond rear edge of chute.
	2.2.2	Height	Not less than 750 mm
	2.2.3	Width	2/3 of belt width
		Side plate	Min. 10 thk TISCRAL/ equivalent
		Top cover	6 mm thk M.S.
	2.2.4	Skirt Board Rubber properties	
	i)	Hardness	55 (+/-) 5 shore A
	ii)	Abrasion loss	125mm^3 (max.)
	iii)	Tensile Strength	125 kg/cm^2 (min.)
	iv)	Specific Gravity	1.12 + 0.02
	v)	Elongation at break	400% (min.)
	2.3.0	**Flap Gate**	
	2.3.1	Type	Linear actuator operated, 2 position
	2.3.2	Travel	60 deg. (with limit switches on both sides).
	2.3.3	Automatic operation	
		(i) Drive	Dust tight motor driven with suitable linkages
		(ii) Minimum Actuator Rating	3500 kg with 1 m lever arm
		(iii) No. of Operation / Hr	15 (with 10 consecutive switchings)

		(iv) Protection	Travel and Thrust dependent limit Switches.
	2.4.4	Manual Operation	
		(a) Maximum effort	Convenient for single operator by declutchable hand wheel regardless of electrical power.
		(b) Minimum Handwheel Diameter	500 mm
	2.4.5	Flap gate shaft	
		(i) Diameter minimum	150 mm
		(ii) Material	EN-8
	2.5.0	**Rack & Pinion Gate**	Rotary actuator operated with provision of manual operation
	2.5.1	Material	Mild Steel
	2.5.2	Liner	10 mm thick TISCRAL/equivalent
	2.5.3	Rack & Pinion	Cast Steel
	2.5.4	Shaft	EN-8
	2.5.5	Max. time for closing/ opening	50 sec.(Approx)
	2.5.6	Maximum manual effort	25 kgs.
	2.5.7	Limit switches	Both travel & thrust dependent
	2.5.8	Main shaft dia. Minimum	150 mm
	2.5.9	No. of Operations /hr.	15 (with 10 consecutive)
	2.5.10	Diameter of rod for rod gate	40 mm (minimum)

A-06: BELT CONVEYOR SYSTEM

1.00.00 GENERAL

All Belt Conveyors shall be furnished and erected along with necessary supporting structures, platforms, on ground or overhead galleries, trestle structure with foundation footings, carrying and return idlers, automatic take-ups, pulleys, drive motors with suitable reduction units and couplings, belting, feeder hoppers, transfer chutes, flap gates, hydraulic couplings and other necessary accessories as per scope specified elsewhere.

1.01.00 CODES AND STANDARDS

The design, manufacture, inspection and testing of the Belt Conveyor System shall comply with all the currently applicable statues, regulations and safety codes in the locality where the equipment is to be installed. The belt conveyor system shall confirm to the latest edition of the following standards & codes. Other internationally acceptable standards/codes, which ensure equal or higher performance than those specified, shall also be accepted. Nothing in this specification shall be construed to relieve the contractor of the required statutory responsibility. In case of any conflict in the standard and this specification, the decision of the Employer shall be final and binding.

"Belt Conveyors for Bulk Materials" published by Conveyor Equipment Manufacturers' Association.

IS:7155 : Codes of Practice for Conveyor Safety.

IS:1891 (Part-I) : General Purpose Belting

IS:8598 : Idlers and Idler Sets for Belt Conveyors

IS:4009 (Part-II) : Conical Head Grease Nipples

IS:8531: Pulleys for Belt Conveyors.

IS:226 : Structural Steel (Standard Quality)

IS:4682 : Codes of Practice for Lining of Vessels and Equipment for Chemical Processes.

IS:11592 :Code of practice for selection and design of Belt Conveyors.

CAN / CASA - M422 M87: Canadian standard association.

1.02.00 DESIGN REQUIREMENT

1.02.01 Design of belt conveyor system shall be suitable for Limestone parameters specified elsewhere.

1.02.02 Slopes of conveyors, wherever applicable, shall not exceed 16 deg. depending on the lump size, and other governing factors.

1.02.03 The guaranteed capacity of all conveyors shall be the rated capacity.

1.02.04	All conveyors shall be designed for 110% of rated capacity. Design capacity of the conveyor system shall be considered for the selection of belt width, belt speed and the continuous motor rating at 50 deg C Ambient.
1.02.05	The drive chain equipment's for various belt conveyor systems shall consist of drive motors, fluid couplings, gear reduction units, low speed flexible couplings and pulleys. For the ratings of various equipment's as mentioned above in the drive chain of conveyor systems relevant sections of this specification shall be referred to.
1.02.06	Conveyors and belt feeders shall be provided with electro hydraulic thruster brakes or fly wheels to adjust the coasting time of conveyors such that there will not be any build up of material in the chutes. Further conveyor shall come to halt as early as possible. All conveyors with HT drives shall be provided with brakes.
1.02.07	Belt feeders shall be provided as per the tender drgs alongwith the complete electrically driven moving mechanism with rails, trolleys, guide roller etc. The complete discharge pulley movement area shall be covered with proper sealing arrangement. Proper brakes and mechanical locks shall be provided to avoid the rushing of the discharge pulley due to load and the design shall prevent over travel of pulley / belt feeder. The discharge chute opening shall be provided with proper handrails for the safety purpose. Suitable rotating strobe lights and siren shall be provided to warn personnel at the time of operation. Suitable arrangement for sensing correct positioning of movable pulley / belt feeder shall be provided which shall be used in protective interlock.
1.02.08	Belt conveyor system shall be designed as per the latest edition of 'Belt Conveyors for Bulk Materials' published by Conveyor Equipment Manufacturer's Association' or equivalent International Standard. Ai value for idlers shall be considered 2.8 (min.) for the purpose of conveyor calculation.
1.03.00	**CONSTRUCTION REQUIREMENT**
1.03.01	**Belting**
	The belting shall be of either synthetic fabric such as Nylon-Nylon/Polyster-Polyamide, etc. with rubber covers of adequate flexibility to give a troughing angle of 35 deg. For all the conveyors the number of plies, cover thickness, factor of safety etc. shall be as per the recommendation of belt manufacturer, but not inferior to the figures as tabulated in data sheet.
1.03.02	**Idlers**
	Carrying idlers shall be provided with three equal rolls with troughing angle of 35 deg. and 2 deg. forward tilt (except in case of reversible conveyors). The diameter of the idler roll shall not be less than 152 mm for both carrying side and return side for limestone and 127mm for gypsum conveyor. However for impact idlers roll the steel diameter shall not be less than 139 mm and rubber thickness shall be minimum 25 mm for limestone and 114mm (min) for gypsum conveyors with 25mm rubber thickness. Roller used in idlers shall be made from ERW steel tube. Wall thickness shall be minimum 4.0 mm without any negative tolerance. The rollers shall be mounted on EN-8 or equivalent material spindles by means of ball bearings of either deep groove type or seize resistant type (SKF/Equivalent), of 30 mm size for carrying idlers and 20 mm size for return idlers for limestone. However for gypsum idlers the rollers shall be mounted on EN-8 or equivalent material spindles by means

	of ball bearings of either deep groove type or seize resistant type (SKF/Equivalent), of 20 mm size for both carrying idlers and return idlers. The idlers provided for gypsum conveyors shall be coated with polyurethane. The bearings shall be adequately sealed and lubricated for life. The rolls shall be supported from fabricated steel brackets. Fixing arrangement of rollers with brackets shall be drop-in type. For adjusting the alignment of the idlers, slotted holes shall be provided in idler supporting base plates. Direction of belt travel shall be clearly marked on the brackets of carrying idlers by embossing / punching. Idler rollers shall be waterproof, dust proof and weather proof against a high velocity water jet. All idlers shall be provided with minimum double labyrinth dust seal. All the conveyors shall be provided with one self cleaning type rubber disc return idler located near the head pulley for cleaning the return belt. Transition type troughing idlers shall be used adjacent to all pulleys to permit proper support of the loaded belt near the pulleys without excessive stretch of the belt edges. The transition idlers shall be provided with preferably adjustable concentrator (end) rolls and long center rolls to suit the troughed belt contour between the last regular troughing idler and the adjacent pulleys. The transition length and the number of the transition idlers shall be selected depending upon the tensions, type and size of belt, number of plies and other necessary governing factors.
1.03.03	**Belt Cleaners** External Belt Cleaner Spring loaded scraper type cleaner with modular segmented and replaceable polyurethane scrapers blades complete with main cleaner, pre-cleaner (mounted separately) along with accessories and necessary fines (reject of scrapper) chutes shall be provided for all belt conveyors, tripper head pulley and belt feeders at discharge pulleys. The modular units shall be easily replaceable. The scraper assembly shall be easily maintainable from outside without any interference with the chute arrangement and assembly. Internal Belt Cleaner V-plough type belt cleaner made of mild steel flats and hard rubber strips with automatic wear adjustment and necessary accessories shall be furnished for cleaning internal surface of the conveyor belt.
1.03.04	**Belt Take-up Arrangement** Automatic take-up of gravity type shall be generally provided with necessary take-up arrangements complete with bend pulleys, take-up pulley, with its supporting / sliding assembly, wire ropes with turn buckle arrangement (to adjust the level) for suspending the separate take - up weight sliding assembly close to the ground, counter weights and other accessories. Suitable guards marked up scale attached to the frame to monitor belt stretch and access/maintenance platforms with handrails all around etc. shall be provided. Adequate access from conveyor gallery/transfer house/ground etc., as the case may be shall be provided to inspect, repair and maintain the gravity take-up arrangement. Suitable arrangements shall be provided for clearing accumulated limestone from various platforms to ground level. Guides of

take up pulley/counter weights shall be sufficiently strong, made up of pipe/box section so that they do not bend during belt snapping. Guide shall be properly supported at regular interval.

The prime consideration should be to locate the automatic take-ups at a place where these will work best, in relation to the drive, to keep belt tension at a minimum. Other considerations such as available space, maintenance considerations and the economics of the location should also be taken into account while designing. Take up shall not be located over buildings unless indicated in tender drawings. Height of take-up guide structure shall be sufficient to allow the take-up weight movement up and down for all operating conditions of conveyor and to allow minimum two (2) vulcanizing lengths margin in the belt or percentage of conveyor length (2.5% for synthetic belting or 0.5% for steel cord belting) whichever is larger. Suitable guides shall be provided both for take up pulley and take up weight.

Two (2) meter safety fencing along with suitable gate and locking arrangement shall be provided around gravity take-up at the base level / ground level.

Irrespective of take-up location, the travel zone of take-up weight shall start from a suitable height above ground level.

Suitable buffer arrangement shall be provided to arrest the fall of take-up pulley in order to avoid damage of the pulley assembly in case of belt snapping. Similar buffer arrangement shall be provided for take-up weight also, in case of, take-up weight travel zone terminating above a building floor. Sandpits of 600 mm deep shall be provided at ground below the take-up weights.In case of double stream conveyors, a partition of 3 mm steel plate shall be provided between the two take-up pulleys along entire travel zone of take-up pulleys. Intermediate platforms shall be provided in the take-up zone for maintenance of take - up pulleys / counter weight.

Take-up weight shall consist of multi-blocks of RCC/ Cast Iron and not of single block to facilitate adjustment in weight if required during operation. Single heaviest piece shall be suitable for easy handling. Take-up weight block shall be provided with edge protection angle to take care of any damage. Take up weights shall be kept inside a take up weight box frame structure and shall be properly anchored / bolted with the main frame, so that the none of the weight shall be loose/free inside the box. The box shall be painted with counter weight and conveyor number and shall have good aesthetic look.

1.03.05 Hold Back Devices

Suitable hold back devices for preventing running back of the conveyor belt in case of conveyor being stopped in loaded conditions due to power failure or during normal operational delays shall be provided to give positive protection. The hold back shall instantaneously engage without shock and be capable of protecting equipment and personnel. It shall be released instantly when ‘power’ resumes or the ‘delay’ is removed. The holdback devices shall be integral with gearbox.

1.03.06 Pulleys

Pulleys shall be provided as required for various conveyors. In determination of pulley diameter, no account shall be taken of the pulley lagging. The nominal diameter and face width of the pulleys shall be as stated in IS: 8531.

The snub pulleys on each conveyor shall be located to provide a belt wrap on the drive pulleys of not less than 210 deg. wrap is envisaged for single snub drive only.

All drive pulley surfaces shall be hot lagged with vulcanised natural rubber lagging grooved in diamond pattern.

All non-drive pulleys shall be vulcanised natural rubber lagged (hot) with plain lagging.

The rubber to be used for lagging of pulleys shall confirm to specifications listed in data sheet of this section.

The rubber lagging of pulleys and method of lagging and testing the same shall conform to IS:4682.

The pulleys shall be made from mild steel conforming to IS:2062 (Tested Quality). However, for conveyors with in line magnetic separators, the head end pulleys shall have shell and end disc made of non-magnetic stainless steel material.

All the pulleys shall be mounted on the forged steel shafts of EN-8 or equivalent material of adequate proportion by taper lock arrangement, running in heavy duty roller bearings with proper greasing arrangement. The plummer blocks for pulleys shall be of horizontally split type construction with minimum (4) nos. bolts holding the two split halves and with min (4) nos. foundation bolts. The plummer blocks shall be dust tight with double labyrinth seals. Conical head shape nipples conforming to IS:4009, suitable drain plug and eye bolt shall be provided. Side covers of plummer blocks shall be heavy duty metallic sheets. No plastic components shall be used. Pulleys shall be mounted on machined & ground surfaces. Suitable guards shall be provided for all tail pulleys and bend pulleys for safety of operating personnel.

Suitable stiffening arrangements shall be provided in all pulleys, as required. For selection of pulley shaft dia of all the pulleys, a margin of atleast 20% shall be considered on the maximum tension at designed Conveyor capacity. Selection of pulley diameter, shell thickness, stiffening and shaft diameter shall be subject to approval of Employer during detailed engineering.

1.04.00 Belt Protection Equipment

1.04.01 Pull chord Switch

Pull chord type (manually reset type) emergency stop switches shall be located on both sides of belt conveyors along the walkways for the entire length of conveyors for emergency stopping of conveyor. The enclosure shall be of cast aluminum with degree of protection IP-65. It shall have a separate terminal box with a separate hinged cover which shall be totally sealed from main box containing actuating mechanism / limit switch etc. Local pull chord actuation shall be provided by means of mechanical flap. Each switch shall have two NO and two NC contacts, which shall be wired out to the terminal block. The terminal block shall have facilities of cable looping. The Contact rating of the switches shall be rated for atleast 5 Amps, breaking at 240 VAC at 0.3 p.f. lagging. Adequate length of rope and all accessories shall be furnished. Pull chord in stone picking area shall be routed inside G.I. pipe of 1” size.

1.04.02 **Belt Sway Switches**

Belt sway switches of self resetting type shall be furnished at periodic intervals to limit belt sway to permissible extent. The enclosure shall be of cast aluminum having degree of protection of IP-65. It shall have a separate terminal box with a separate hinged cover totally sealed from the main box containing actuating mechanism/ limit switch etc. Each switch shall have two NO and two NC contacts one for alarm and one for trip, which shall be wired upto terminal block. The terminal block shall have facilities for cable looping. The contacts of the switches shall be rated for atleast 5 Amps. breaking at 240 VAC at 0.3 p.f. lagging. The roller length of the switch shall be at least 150 mm. Belt sway switches shall also be provided at HGTU & VGTU to detect excessive belt away.

1.04.03 **Zero Speed Switch**

Zero speed switch shall be non-contact (proximity) type electronic switch. Mounting arrangement/ location shall be such that operation, effective sensing distance, sensitivity etc. shall not be effected by accumulation of dust on rotating part or surface of probe. Adequate mechanical protection by means of non-metallic shields shall be provided on top of the switch to prevent any damage due to falling limestone / metallic pieces etc. In built initial start up delay and nuisance, tripping delay through timers shall be provided. Each switch shall have two NO and two NC contacts wired out to the terminal blocks. The contact of the switches shall be rated for atleast 5 Amps. breaking at 240 VAC at 0.3 p.f. lagging. The monitoring unit shall have cast aluminum body having IP-65 degree of protection. A separate terminal box with a separate cover, which shall be totally sealed from main box, shall be provided. Terminal blocks shall be suitable for terminating 1.5 mm sq. standard copper cable.

1.04.04 Chute Blockage Switches

One no. chute blockage switch of proven type (subject to approval of the employer) shall be provided at a suitable height on each leg of the conveyors discharge chute, vibrating screening feeders bypass chutes, crusher feeding chutes, tripper discharge and feeding chutes nearest to the skirt boards. Chute blockage switch shall trip the feeding conveyor in case of Chute blockage and protect the feeding conveyor equipment. Chute blockage switch shall also be provided at each leg of mobile tripper and shall trip the tripper conveyor.

The switch and its operating arrangement shall be suitable for working in dusty areas. The minimum degree of protection of switch shall be IP-65. Local indication of chute blockage switch actuation shall also be provided. Location of chute block switch shall be such that washing does not affect it.

1.04.05 Sensing arrangement shall be provided in the DDCMIS based control system for detecting the presence of material on the belt which shall in turn be used for operating solenoid valves of dust suppression/extraction system elaborated elsewhere. The arrangement shall detect three events simultaneously as follows:

(a) Belt loaded

(b) Belt running at more than preset speed.

(c) Preset initial start delay.

The terminal boxes of all the belt protection equipments / switches shall be such that all the components / terminals inside are easily accessible for inspection and maintenance without removing the cables / connections / components.

1.04.06 Each pull cord and Belt sway switch shall have necessary chip for using in circuit for the identification of the operated switch in main control room. The scheme for switch identification shall be fail safe and shall have all diagnostic features. The scheme shall have facility to by pass one or more switches, if required.

1.05.00 Drive Motors

Rating of all drive motors of conveyors shall not be less than 120% of the power required at drive motor output shaft at specified design capacity. The motor rating shall be at 50 deg Cent. ambient.

Single LT drive motors shall be used for conveyor drive ratings up to 160 KW. For conveyor drive rating beyond 160 KW, single HT drive shall be used for conveyors.

1.06.00 Conveyor Bridges

All overground and overhead conveyors shall be located in suitably enclosed bridge structure. Structural steel bridges of adequate width and depth (2700 mm clear head room) shall be provided complete with conveyor bottom deck plates, seal plates, walkways of chequered plates with anti-skid arrangement(s), hand rails (on both sides of each conveyor belt except where equipment (like paddle feeders, trippers etc.) traverse over conveyor supports.

The conveyor bridge shall have permanently colour coated steel sheeting covers on roof and both sides, properly screwed or locked to steel structure as required. Adequate provision of windows shall be kept. A continuous slot opening of 500 mm shall be provided on both sides just below the roof sheeting.

The floors of outdoor conveyor galleries shall be designed and constructed as follows:

Side and central walkways for double streams conveyors shall be 800mm and 1100mm wide respectively. The side walkways for single conveyors shall be 800 mm on one side and 1100mm on the other side. However, if the centre to centre of conveyors or the width of the gallery is decided by some other criteria, maximum walkway widths consistent with gallery sizes shall be provided. In the complete length of conveyor gallery minimum walkway clearance as indicated above is to be maintained inclusive of all equipments and clearances.

All conveyors shall be provided with 12 G steel seal plates throughout the length of the conveyor gallery in such a way that complete gallery bottom surface area forms a single water proof floor and no water / limestone falls down from conveyor gallery incase of cleaning / washing. It is envisaged to clean the conveyor gallery with water periodically. All the water / limestone slurry shall be suitably guided to down comers provided at every trestle. Each downcomer shall lead the limestone slurry into a 2 cu. meter RCC tank at ground level having 2 Nos. decanting taps at suitable elevations. Decanted water shall be led to the nearest drain in the Contractor's scope. Necessary arrangement shall be provided to avoid choking of downcomers by bigger limestone lumps and for cleaning of choked downcomers**.**

The conveyors shall be provided with continuous decking plate of minimum 3 mm thickness plain steel sheet. Structures and floors shall be so designed as to provide suitable space for routing of 200 NB fire fighting pipe with water, cables and conduits.

Steel trestles to support the conveyor bridge shall rest upon concrete foundations to be provided by the Contractor. Complete trestle structures shall also be supplied by the Contractor. Suitable approach/access platforms with hand railings shall be provided to approach the conveyor gallery (like in case of fire) through monkey ladders on the trestles. Suitable wire mesh doors on steel frame construction lockable from outside only shall be provided in the conveyor galleries at these locations. All monkey ladders shall have cage for safety of personnel using them.

Independent supports for walkways, conveyor structures shall be provided. The width of conveyor galleries shall be decided by the Contractors depending on the equipment's size and the walkway width as specified. However, in no case the width of gallery shall be less than the width specified in tender drawings.

Provision shall be kept with platforms and ladders for crossing over the conveyors at approximately every 100m intervals of route length and minimum one per conveyor.

1.07.00 Stone Picking

Manual Stone Picking arrangement at a suitable location in the conveyor gallery before the crusher house shall be provided complete with platforms, overhead lighting, handrailings, suitable seating, safety hook & holding arrangement for manual pickers, disposal chutes to ground level etc. Six (6) nos. manual pickers shall be positioned for stone picking. Three (3) nos. manual pickers shall be positioned on each belt. Each manual picker shall cover 3 m long belt stretch adjacent to each other and shall have provision of individual stone collector discharge hood. The picked up stone lumps (upto 600 mm size) shall be collected over the conveyor gallery walkway level from where these stones can be pushed into the hopper/chute upto the ground level. Disposal chute from discharge hoods of length upto 2 meters from ground level shall be provided etc.

In the gallery span of stone picking area, the gallery width shall be extended by a minimum of one (1) mtr. on either side to accommodate the stone picking accessories. Accordingly the width of Conveyor Gallery shall be 2 meters wide all along the span of stone picking zone as compared to other gallery span. All trestle coming in the zone of stone picking area shall be suitably encased by RCC. The stone picking area should be suitably barricaded upto 2 mtr. height above ground level so that no damage take place due to stone pile formation and its handling by pay loaders.

1.08.00 **Special Cleaning, Protection and Painting**

All equipment's of **limestone** Handling Plant inclusive of belt conveyor system and technological structures shall be kept clean. Surfaces to be painted shall be thoroughly cleaned of loose mill scale, rust etc. by wire brushing. All ferrous surfaces shall be applied with one shop coat of 35 micron and one 35 micron site coat of red oxide zinc chromate and two coats, each of 25 micron, synthetic enamel finishing paints unless specified otherwise. A minimum of 120 microns Dry Film Thickness (DFT) after finished coat of paint shall be ensured. However for deck plate in track hopper and tunnels, painting specifications mentioned at sub section IIID-01 shall be applicable.

The painting colour code shall be provided to the Contractor during detailed engineering. However, idler roller shall be applied with two coats of red oxide Zinc chromate only of total thickness of 70 micron at shop.

A-06: DATA SHEET: BELT CONVEYOR

1.0.0	**GENERAL**	
1.1.0	Design Capacity	110% of rated (guaranteed) capacity for all conveyors excepting boom conveyor. For boom conveyor, the design capacity shall be 125% of rated (guaranteed) capacity.
1.2.0	Maximum slope	16 deg
1.3.0	Max. belt Sag between idlers	2%
1.4.0	Minimum Radius	
	(i) Concave curve	250 m (In case of travelling trippers, the requirement of minimum radius shall be decided based on the space availability)
	(ii) Convex Curve	50 m
1.5.0	Limestone Parameters	As specified elsewhere
2.0.0	**DESIGN & CONSTRUCTION**	
2.1.0	**Belting**	
2.1.1	Type	Synthetic Fabric of Nylon / Nylon, Polyester / Polyamide, Steel Cord. etc.
2.1.2	Cover Grade	a) Flame test : Conforming to ISO:340 b) Drum Friction and Electrical Surface Resistance Test: Conforming to Canadian standard association CAN / CSA M-422- M87 Grade - C.
2.1.3	Cover Thickness (without –ve tolerances).	Synthetic belting Steel Cord

	(a) Face	5.0 mm (min.)	8.0 mm (min.) (Inclusive of steel fabric breaker)
	(b) Bottom	2.0 mm (min.)	6.0 mm (min.) (Inclusive of steel fabric breaker)
2.1.4	No. of plies	Minimum 3	
2.1.5	Drive Arrangement	Snub drive	
2.1.6	Factor of Safety	- 10 (Minimum) for N-N belt. - 7 (minimum) for Steel Cord Belt.	
2.1.7	Normal Working tension at design capacity	Less than 80% of max. allowable working tension	
2.2.0	**Idlers**		
2.2.1	Type		
	(a) Carrying	Three roll, 35 degree troughing, 2 degree forward tilt	
	(b) Return	Single Roll, For conveyors upto 400 m c/c length. Two roll with 10 degree angle for conveyors more than 400 m c/c length	
	(c) Loading point	Impact type	
2.2.2	Spacing		
	(a) Carrying idlers	1.2 m (0.6 m for convex curves and in the paddle feeder travel range).	
	(b) Return idlers	3.0 m (for convex curves not more than 1.5 m.)	
	(c) Loading point	Minimum six (6) with 400 mm spacing.	
	(d) Self-aligning troughing idlers	At 10 m distance from head & Tail pulleys with intermediate spacing 15m	
	(e) Self - aligning return	At 10 m distance from Head & Tail	

		idlers	pulleys with intermediate spacing 20m. (Not required for conveyors more than 400m c/c long where 2 roll return idlers are provided).
	2.2.3	Bearings	
		(a) Carrying	Ball Bearings of deep groove type or seize resistance type of min. 35 mm size, lubricated for life.
		(b) Return	Ball Bearings of deep groove type or seize resistance type of min. 25 mm size, lubricated for life.
	2.2.4	Material	
		(a) Roller	ERW Steel tube min. wall thickness 4.0 mm
		(b) Spindle	E.N. 8 or equivalent.
	2.3.0	Belt Cleaners	
	2.3.1	External	Spring loaded scraper type cleaner with modular, segmented and replaceable PU blades with separate main-cleaner & pre-cleaner etc.
	2.3.2	Internal	V-Plough type, mild steel flats with hard rubber strips.
	2.4.0	Belt Take up	
	2.4.1	Type	Automatic Gravity Type.
	2.4.2	Location	In relation to the drive to keep belt tension at minimum.
	2.4.3	Take-up travel	To suit all operating conditions or (2.5% for synthetic belt and 0.5% for steel/cord belt) of conveyor center to center length whichever is larger. Further the initial location of take-up shall be decided in such a way that it is possible to carryout min. two (2) nos. Vulcanizing Joints without adding

			any external belt.
	2.5.0	Hold Back Device	Integral with gear Box
	2.6.0	Pulleys	
	2.6.1	General (for all types of Pulleys)	
		(i) Pulley shaft diameter	Margin of minimum 20% shall be Considered on maximum tension at design capacity for arriving at the shaft dia.
	2.6.2	Drive Pulleys	
		(1) Lagging	Hot lagged with vulcanised natural rubber
		(2) Lagging thickness	12 mm thick grooved in diamond pattern with grooves 6 mm wide x 6 mm deep
		(3) Minimum angle of wrap	210° degrees
		(4) Maximum Out of roundness	0.5% of nominal diameter
	2.6.3	Other pulleys	
		(1) Lagging	Hot lagged with vulcanised natural rubber
		(2) Lagging thickness	12 mm thick plain
	2.6.4	Rubber for lagging	
		(1) Type	Natural rubber blended with styrene Butadiene rubber.
		(2) Hardness	55 to 65 durometer (Shore A)
		(3) Elongation	Over 300%
		(4) Strength	160-245 kg/cm^2
		(5) Abrasion loss	250 mm3 (max.) as per DIN 53516

		(6) Specific Gravity	Max. 1.5
		(7) Adhesion Strength	10 kg/cm (minimum)
	2.6.5	Bearings for Pulleys	
		(1) Type	Heavy duty roller type
		(2) Casing	Horizontal Split Type
		(3) Sealing	Dust tight with double labyrinth seals.
		(4) Lubrication	Greasing arrangement with conical head shape nipples.
	2.6.6	Pulley Material	Mild steel conforming IS:226 / IS : 2062
	2.6.7	Shaft Material	Forged Steel shaft EN-8 or equivalent material
	2.7.0	Belt Protection Equipment	
	2.7.1	Emergency Stop Switch System	
		(1) Type	Pull chord type (manually reset)
		(2) Location	Both sides of conveyor for entire length
		(3) Spacing	Approx 30 m
	2.7.2	Belt Sway Switches	
		(1) Type	Limit switches snap action.
		(2) Spacing	One pair at 50m interval (Minimum two (2) pairs)
	2.7.3	Zero Speed Switches	
		(1) Type, Location	Proximity switch, mounted on Bend pulley of GTU.
	2.8.0	Drive Motors	
	2.8.1	Type	Three Phase Squirrel Cage Induction Motors

2.8.2	Mounting (for conveyors)		Base mounted
2.8.3	Continuous motor rating (Name plate rating) at 50°C Ambient		120% of actual power requirement at motor output shaft at design capacity.
2.9.0	Conveyor Bridges		
2.9.1	Walkways		
	(a)	Construction	Chequered plate with antiskid arrangement. Chequered plate steps shall be provided where conveyor slope exceeds 10 degrees. (Totally sealed so that no water falls down while washing.)
	(b)	Central walkway width	1100 mm
	(c)	Side walkway width	800 mm (for single conveyors, the width of side walkways shall be 800 mm on one side and 1100 mm on the other)
2.9.2	Side Windows		
	(a)	Spacing (Center to center)	25.0 m on each side (in staggered fashion)
	(b)	Size	1.2 m x 1.5 m
	(c)	Window material	Refer Civil Section
2.10.0	Trestles		
2.10.1	Spacing of monkey ladders on trestles		
	(a)	Where height of conveyor gallery (walkway level) is 10 m or more.	: On every trestle
	(b)	Where height of conveyor gallery (Walkway level) is less than 10m.	: On alternate trestle

A-07: DRIVE EQUIPMENT

1.00.00 GENERAL

Suitable Drive Chain Equipment's like electric motors, gearboxes (where applicable), fluid couplings (where applicable), flexible couplings and other accessories shall be provided for all the belt conveyor systems, paddle feeders, crushers, mobile trippers, various pumps of dust suppression/extraction system, fans for ventilation system, monorail electrical hoists and other equipment's specified in this specifications. Various requirements as spelt out in the Technical Specifications for individual equipment's shall be taken into consideration while designing the associated drive chain equipment's.

1.01.01 CODES AND STANDARDS

The design, manufacture, inspection and testing of Drive Equipment shall comply with all the currently applicable statutes, regulations and safety codes in the locality where the equipment in to be installed. The Drive Equipment's shall conform to the latest edition of the following standards and codes. Other internationally acceptable standards/codes, which ensure equal or higher performance than those specified, shall also be accepted. Nothing in this specification shall be construed to relieve the contractor of the required statutory responsibility. In case of any conflict in the standard and this specification, the decision of the Employer shall be final and binding.

IS:3688 : Dimensions for shaft ends

IS:3681: General plan for spur & helical gears

IS:7403 : Code of practice for selection of standard worm and helical gear boxes

1.01.02 DESIGN AND CONSTRUCTION REQUIREMENTS

1.01.03 GEAR BOXES

1.01.04 Gear Boxes shall be of sealed type and mounted on machined or ground surfaces.

1.01.05 The gearboxes shall be designed for 24 hours continuous duty. For thermal and mechanical rating of the gearbox the data sheet shall be referred to. Gearboxes with cooling coils are not acceptable.

1.01.06 The gears used shall be helical conforming to IS:3681 (latest revision) or worm reduction units or spiral bevel speed reduction units conforming to suitable Indian Standards. The dimensions of the shaft end shall conform to IS:3688 or its latest revision. Above 40 kW drive rating, all gearboxes shall be helical or bevel helical type only.

1.01.07 Recommended oil grade shall be compatible with gear internals like material of bearing, cages. Further, all gearboxes shall have suitable breather plugs, dipstick, drain plug etc.

1.01.08 Couplings

1.01.09 Flexible / Rigid Couplings

Couplings shall be used for power transmission depending upon duty requirements. The design of the coupling shall be such that it can take shock and misalignment without sacrificing its efficiency. Flexible couplings shall be used for low speed

application only. Geared type flexible coupling shall be used on low speed side for all conveyors and other drive chains where gear box is provided. Other couplings in the drive chains shall be either rigid or flexible type, depending upon the requirement of equipment design.

1.01.10 Fluid Couplings

Fluid couplings shall be provided in all the drive machinery for belt conveyor systems and Limestone crushers if the actual power requirement at motor output shaft is more than 40 kW. The fluid coupling for LT motors shall be of traction type. Cooling water coils for traction type fluid coupling shall not be accepted. Scoop tube type fluid coupling shall be provided for conveyors with HT motors and ring granulator type Limestone crushers. Suitable electrically operated actuators shall be provided for scoop tube operation from local as well as remote. Suitable provision for alternate manual operation shall also be kept. Separate pump with motor or integral shaft driven oil pump shall be provided for circulating the fluid coupling oil through oil cooler. Arrangement for forced cooling water supply to oil cooler shall be provided by Contractor. Suitable interlock using flow switches shall be provided in both oil as well as water lines to trip the drive motor in the event of flow in either lines falling below acceptable levels. Suitable pressure indicators and flow indicators shall be provided in the cooling water lines along with all-relevant valves, and accessories. Necessary isolation valves shall be provided in the oil / water line for maintenance of any equipment in the line. Necessary interlock shall also be provided so that the HT motor cannot be started from remote / local unless position of scoop tube permits no load start of the motor. Tripping of downstream equipment while the system is under normal operation shall result in scoop tube re-positioning to permit no load run of the concerned HT motor. Temperature switch shall be provided in the oil circuit and shall trip the system in case of high oil temperature.

Selection of rating & speed of actuator for scoop type fluid coupling shall be made taking into consideration the coasting time of downstream and upstream conveyors and the engagement/disengagement time achievable. The scoop tube operation must be such so to ensure draining of oil from the operating circuit by providing a double speed motor. The speed (for draining) shall be selected to match the coasting time of downstream equipment/conveyor.

A-07: DATA SHEET: DRIVE EQUIPMENT

1.0.0	**GENERAL**	
1.1.0	Continuous Motor Rating (Name Plate Rating) at 50 Degree Centigrade Ambient temp. for Electric Motors	
a)	(i) For conveyors of belt conveyor systems	*120% of actual power at drive motor output shaft at specified design capacity
	(ii) For Belt feeder	*150% of actual power at drive motor output shaft at specified design capacity
	b) Crushers, Mobile trippers travel drive, paddle feeders carriage drive, mono-rail hoists (travel and hoisting), elevators, rack and pinion gates, all the drives in sampling units, various pumps of DS/DE systems, service water systems, cooling water system, potable water system and sump pumps, Ventilation Fans	*110% of actual power requirement at drive motor output shaft at guaranteed (rated) capacity.

*The actual power at drive motor output shaft shall be calculated after considering all the losses of down the line equipment's of the drive train.

2.0.0	**DESIGN & CONSTRUCTION REQUIREMENT**	
2.1.0	Gear Box	
2.1.1	Type	
	(a) Below 40 KW	Helical, worm, bevel as per requirement without cooling coil
	(b) Equal to and Above 40 KW	Helical / bevel helical without cooling coil
2.1.2	Service Factor	As per accepted engineering practice / manufacturer's recommendations

2.1.3	Ambient temperature for Thermal rating		50°C Minimum
2.1.4	Mounting		On Machined / Ground Surfaces
2.1.5	Output Rating		
			a) For belt conveyor systems @ Service factor X {1.2 times the actual power requirement at drive pulley shaft at design capacity}
			c) For other equipment
			@ Service factor X {1.2 times the actual power requirement of the driven equipment }

@ Service factor shall include all the components considered by the supplier and should be clearly indicated in manufacturer's gear box selection catalogues.

2.1.6	Duty		24 Hrs. Continuous
2.1.7	Rating		Not less than motor name plate rating
2.1.8	Thermal rating		Corresponding to 50°C ambient and in any case shall not be less than motor rating
2.2.0	Flexible Couplings		
2.2.1	Type		Geared coupling.
2.2.2	Rating		Not less than motor rating.
2.3.0	Fluid Couplings		For all motors having rating more than 40 KW.
2.3.1	Type		
	(a)	L.T. Motors	Traction type
	(b)	H.T. motors	Scoop tube type.
2.3.2	Rating		Not less than motor nameplate rating

A-08: BELT SCALE

1.00.00 GENERAL

Belt weigh scale for measurement of limestone flow rate and quantity shall be provided at specified locations. System shall be complete with flow rate indicator, totaliser, control panel etc.

1.00.01 Codes & Standards

The design, manufacture, inspection and testing of Belt Scales shall comply with all the currently applicable statutes, regulations and safety codes in the locality where the equipment is to be installed. The Belt Scales shall conform to the latest edition of the following standards and codes. Other internationally acceptable standards/ codes, which ensure equal or higher performance than those specified, shall also be accepted. Nothing in this specification shall be construed to relieve the contractor of the required statutory responsibility. In case of any conflict in the standard and this specification, the decision of the Employer shall be final and binding.

NEMA

NEC For electronic circuit enclosures.

IS:11547 Electronic weighing in motion system.

1.00.02 Design & Construction Requirements

The weigh scale shall be automatic and electronic type. It should be designed for continuous automatic weighing, metering and printing of limestone flow.

Each belt weigh scale shall comprise of a belt weigh scale platform with minimum 4 nos. weighing idlers. It shall have unitised construction for ease of installation and shall be fully floating type (without pivot points). Minimum 4 nos. hermetically sealed load cells of precision strain gauge type shall be applied in tension to support the weigh bridge. The load cells shall have 100% overload protection and shall be structurally safe upto to 250% of rated belt scale capacity.

Belt scale shall be electronic microprocessor based with its program stored in non-volatile memory.

It shall be provided with self diagnostic features for trouble shooting of the entire belt scale system.

Fully automatic zero and span calibration facility shall be provided.

The electronic systems offered by the Contractor shall include all signal conditioning, power amplifiers and printed circuits etc. The printed circuits shall be encapsulated against dust and moisture.

The flow rate indicator shall have minimum 4 digits. The flow totalizer should have 8 digits display scale with reset facility.

Complete belt scale system shall be suitable for 50℃ ambient temperature and 100% relative humidity. It shall be suitable for out door installation in a dusty area. The electronic circuit enclosure, sensors housing shall be dust and watertight. The electronic printed circuits shall be encapsulated with epoxy or other suitable material for protection against dust and moisture.

Minimum three years battery back up power failure protection shall be provided.

Belt scale shall be designed for a range of 20% to 120% of rated capacity with an accuracy of atleast (±) 0.25 percent throughout its range. The test load chain shall be 'two idler spaces' longer than the weighing length of the weighers and shall be complete with chain reset equipment with weight adding reels of adequate size. The calibrated weight parameter length of the test chain shall be stamped at a suitable location on the body of the equipment. The test chain shall be installed near belt weigher with suitable arrangement for easy mounting/dismounting of chain onto/from conveyor belt.

Local panel for belt scale shall be of sheet metal.

A-08: DATA SHEET: BELT SCALE

1.0.0	**GENERAL**		
1.1.0	Ambient Temperature		50℃
1.2.0	Relative Humidity		100%
2.0.0	**DESIGN & CONSTRUCTION**		
2.1.0	Type		Electronic load cell type
2.2.0	Operation		Microprocessor based fully automatic
2.3.0	No. of floating idlers		Minimum four (4)
2.4.0	Load Cells		
2.4.1	Type		Strain gauge type hermetically sealed
2.4.2	Minimum Nos.		Four (4)
2.4.3	Overload protection		100 % of rated belt scale capacity
2.4.4	Structural capacity		250 % of rated belt scale capacity
2.5.0	Flow Rate Indicator		Electronic Digital Display Minimum 4 digits
2.6.0	Flow totalizer		8 digit display with reset facility.
2.7.0	Accuracy		For entire range of 20% to 120% of rated capacity Minimum $\pm$ 0.25%
2.8.0	Calibration		
2.8.1	Automatic		Zero & span calibration
2.8.2	Manual		With test load chain
	(a)	Test load chain length	Two idler spaces more than weighing lengths
	(b)	Chain reel equipment	Complete with weight adding facility.

A09: LIME STONE CRUSHER

1.00.00 GENERAL

Hammer mill type crusher shall be provided for sizing the input limestone to (-) 20 mm size. Crusher shall be supplied complete with accessories and subsystems.

1.01.00 CODES AND STANDARDS

The design, manufacture, inspection and testing of Limestone Crushers shall comply with all the currently applicable statutes, regulations and safety codes in the locality where the equipment is to be installed. The Limestone Crushers shall conform to the latest edition of applicable standards and codes. Nothing in this specification shall be construed to relieve the contractor of the required statutory responsibility. In case of any conflict in the standard and this specification, the decision of the Employer shall be final and binding.

1.02.00 DESIGN REQUIREMENT

1.02.01 The crusher shall be of hammer mill type and shall be designed based on following clauses and the data sheet enclosed.

1.02.02 The crusher design should be such that the crushing action is accompanied by the minimum of attrition.

1.02.03 Uniform crushing impact shall be assured.

1.02.04 The crusher shall be capable of delivering the normal rated output even when handling damp limestone having maximum moisture content. No clogging or building up of material on the crushing element shall develop.

1.02.05 Temperature sensing devices shall be installed on both bearings of each of the crusher to trip the crusher incase temperature goes beyond allowable limit.

1.02.06 Zero speed limit switch shall be provided for protection against any un-crushable material. It shall sense the speed of rotor and shall trip the rotor when actual speed falls below the design speed.

1.02.07 Crusher shall be provided with vibration monitoring (VMS) system. Specification of VMS shall be as specified elsewhere.

1.03.00 CONSTRUCTION REQUIREMENT

1.03.01 **ROTOR:**

The rotor shall consist of Forged steel shaft, with integral discs or key fitted discs on shaft. Hammers shall be held by spring dowel bushes & shall be arranged around the circumference of the rotor. The number of hammers and number of rows shall be selected as per requirements. The rotor shall be balanced statically.

1.03.02 **GRINDING WALL:**

The grinding walls shall be arranged symmetrically around either side of the rotor and carried by spindles supported in bearings attached to the casing. The wall shall consist of grinding wall supports and wear resistant grinding plates/Impact plates

	bolted on. For product size control, distance between the grinding plates and hammer shall be adjustable.
1.03.03	**HAMMER:**
	The hammer shall be in two parts- head and arm. The hammer head shall be of wear resistant steel material. The hammer arm shall be of forged alloy steel. In the event of wear, only the hammer head shall be replaced. Arms shall be selected so that they have long life and do not require frequent replacement.
1.03.04	**FRAME /HOUSING:**
	The housing shall be split type. Housing shall be fabricated from MS steel plates of weldable quality and shall be stiffened suitably. Maximum accessibility shall be provided for routine inspection and replacement of parts. For these purposes, the doors shall be of hinge connection with effective dust sealing arrangement. Hydraulically operated top cover of crushers shall be provided for quick inspection and replacement of hammers. The entire inside surface of crusher coming in contact with limestone shall be provided with abrasion resistant liners.
1.03.05	**DRIVE:**
	The hammer crusher will be driven through Electric motor, scoop type hydraulic coupling .
1.03.06	The material of construction for major components of crusher shall not be inferior to the quality and standards as mentioned in data sheet.
1.03.07	Design and construction features of hammer mill crushers offered by the bidder shall be similar to the crushers which are already working satisfactorily for same or higher capacity.
2.00.00	**VIBRATING FEEDER**
2.00.00	**GENERAL**
	Vibrating feeder shall be provided above the crusher for limestone.
2.01.00	**CODES & STANDARD**
	The design, manufacture, inspection and testing of Vibrating Feeder shall comply with all the currently applicable statutes, regulations and safety codes in the Locality where the equipment is to be installed. The Vibrating Feeder shall conform to the latest edition of the following standards and codes. Other internationally Acceptable standards/codes, which ensure equal or higher performance than those specified, shall also be accepted. Nothing in this specification shall be construed to relieve the contractor of the required statutory responsibility. In case of any conflict in the standard and this specification, the decision of the Project Manager shall be final and binding. IS: 3823 - Dimensions for vibrating conveyors and feeders with rectangular or trapezoidal trough.

2.02.00	**DESIGN REQUIREMENTS**
2.02.01	The vibrating feeder shall be of electromechanical type and shall be provided to feed imestone to crusher. The drive unit shall be complete with mechanical type of vibrator.
2.02.02	The vibrating feeder shall be suitable for lumps size of (-) 250 mm. The feeder shall be designed to feed limestone to the conveyor without material sticking to it. The flow of material shall cease as soon as vibration of the trough or pan ceases.
2.03.00	**CONSTRUCTION REQUIREMENTS**
2.03.01	The vibrating feeders shall be mounted on the floor or suspended from roof with the help of helical springs made of alloy steel. No rubber/synthetic material for the support shall be acceptable.
2.03.02	Vibrator bearings shall be grease lubricated, double spherical roller type suitable for vibrating equipment. The bearings shall be sized for minimum 8,000 hours of operation.
2.03.03	Vibrating feeders shall be provided with removable abrasion resistant liner plate.

A-09: DATA SHEET: LIMESTONE CRUSHER

1.00	**GENERAL**	
1.1.0	Type	Hammer mill type Crusher
1.2.0	Capacity of crusher	Rated: 150 TPH
1.3.0	Material to handle	Lime Stone
1.4.0	Feed Size	(-) 250mm
1.5.0	Product Size	(-) 20 mm – 90% (min.)
1.6.0	Input limestone Parameters	As specified elsewhere.
1.7.0	Limestone Feeding Arrangement	Through vibrating feeder
2.0.0	**DESIGN AND CONSTRUCTION**	
2.6.0	Drive arrangement	Electric motor, scoop type hydraulic coupling
2.8.2	Type of Sealing	Labyrinth, dust tight arrangement
2.8.3	Type of bearing	Spherical roller
2.8.4	Lubrication	Manual through grease gun OR With recommended grade of oil in which case the Plummer block shall be designed with oil filling, oil draining and visual oil checking facilities.
2.9.0	Tramp collection	Required
2.10.0	Output size adjustment facility	Required
2.11.0	Top cover of crushers	Hydraulic Operated

3.0.0	**MATERIAL OF CONSTRUCTION**	
3.1.0	Rotor Shaft	Forged Steel
3.2.0	Hammers head	Wear resistant cast alloy steel.
3.3.0	Hammers arm	Forged alloy steel
3.4.0	Housing/Frame	Steel, IS:2062
3.5.0	Breaking blocks	Cast steel/ MS fabricated
3.6.0	Liners	
	(a) Material	Suitable for duty required
	(b) Thickness	As required

A-10: VENTILATION SYSTEMS

1.00.00 INTENT OF SPECIFICATION

The specification is intended to cover design, engineering, manufacture, supply, erection, testing and commissioning of the complete Ventilation & air conditioning systems as specified hereinafter for the smooth and trouble free operation of Limestone Handling Plant.

1.01.00 The Contractor shall refer to the other sections enclosed to appraise himself of the work and scope of supply of the other Contractors and shall coordinate his work with the work of other Contractors.

1.02.00 GENERAL DESCRIPTION

1.02.01 **Mechanical Ventilation system**

The air quantity for mechanical ventilation system shall be estimated based on equipment and solar heat loads and the temperature rise inside the building. Necessary air filters shall be provided to supply only clean air into building. Exhaust air shall be discharged at a suitable height above building. Exhaust fans shall be provided for tripper floor, Toilets, Battery rooms. All underground structure shall be provided with supply air as well as exhaust air fans.

1.03.00 Pressurised Ventilation System

The pressurised ventilation system having adequate nos. of supply air fans with washable metallic pre filters, HDPE fine filters, and self-closing flap (gravity louver shutter), ducting along with 3 phase AC motor drives, electricals, supporting structures, access / maintenance platforms shall be provided in all MCC/switchgear room areas of limestone handling plant to be furnished under this specification. The pressurized ventilation system shall be designed considering 15 air changes per hour to maintain these areas pressurised slightly above atmospheric pressure to prevent ingress of dust from outside.

1.04.00 Air Conditioning System

Air conditioning system shall be furnished for control room area of main limestone handling Plant control building, office room in main limestone handling Plant control room and in electrical buildings. It shall be designed considering the equipment heat loads, solar heat loads, heat gain into the room, adequate no. of air changes etc. to maintain a uniform temperature and relative humidity within the air conditioned areas.

1.05.00 VENTILATION AND AIRCONDITIONING SYSTEM

1.05.01 Mechanical Ventilation System

The ventilation system generally consisting of adequate number of supply and exhaust air fans, air filters, ducting along with 3 phase AC motor drives, electricals, supporting structures, approach/maintenance platforms, civil and structural works and necessary accessories shall be furnished for ventilating the limestone unloading hopper, underground portion of transfer points, underground conveyor tunnels. Exhaust fans shall be provided for tripper floor, Toilets, Battery rooms. The exhaust

	fans for toilets and battery rooms will be propeller type and for tripper floors will be axial flow type complete with rain protection limestone and bird screen.
1.06.00	Pressurised Mechanical Ventilation System The ventilation system generally consisting of adequate number of supply fans, metallic pre filters, HDPE fine filters, ducting along with 3 phase AC motor drives, electricals, supporting structures, approach / maintenance platforms, necessary shed, civil & structural works and necessary accessories shall be furnished for all MCC/switchgear rooms**.**
1.07.00	**Air Conditioning System**
1.07.01	2x100% capacity air conditioning units with air cooled condensers shall be provided on the following basis. a) For areas where air conditioning load is in the range of 5-15 TR, Non-ductable ceiling mounted (cassette type) or wall mounted (high wall type) split air-conditioners of suitable capacity along with adequate redundancy shall be provided. b) Ductable split/packaged type A/Cs shall only be provided for control rooms where the load varies in the range 15- 25 TR. c) Central air conditioning system shall be provided for control rooms where the load varies in the range 25-60 TR.
1.07.02	Supply and return air distribution ducting complete with insulation, of resin bonded mineral wool equivalent of density at least 24 Kg/m^3 and thermal conductivity of max. 0.49 mw/cm℃ conforming to IS:8183 including supporting structures, approach/ maintenance platforms, civil and structural works and necessary accessories shall be provided.
1.07.03	Area around centrifugal fans, filters, motor foundation shall be paved to have a clear surrounding.
1.08.00	**Codes & Standards** The design, manufacture, inspection and testing of Ventilation & A/C System shall comply with all the currently applicable statutes, regulations and safety codes in the locality where the equipment is to be installed. The Ventilation & A/C System shall conform to the latest edition of the following standards and codes. Other internationally acceptable standards/codes, which ensure equal or higher performance than those specified, shall also be accepted. Nothing in this specification shall be construed to relieve the contractor of the required statutory responsibility. In case of any conflict in the standard and this specification, the decision of the Employer shall be final and binding. IS:3588 : Specification for electrical axial flow fans. IS:2312 :Propeller type AC Ventilation fans IS:3963 :Specification for roof-extractor units IS:4894 :Centrifugal Fans IS:655 :Specification for Metal Air Duct

	ARI:210 :Standard for Unitary air conditioning equipment.
	ARI:270 :Standard for application, installation and servicing of unitary equipment.
	IS:8183 :Specification for bonded mineral wool.
	IS:661 :Thermal insulation for cold surfaces.
	IS:4671:Expanded polystyrene for thermal insulation purpose.
	IS:8148 :Packaged Air conditioners.
2.00.00	**DESIGN REQUIREMENT**
2.01.00	**Axial Fans**
2.01.01	Design duty point of the fan shall match with the average value of maximum and minimum flow rates of the fan in the stable operation zone. The speed of the fan shall not exceed 960 rpm for fan with impeller diameter above 450 mm and 1440 rpm for fan with impeller diameter 450 mm and less. The first critical speed of rotating assembly shall be at least 25% above operating speed.
2.01.02	Impellers shall be axial flow type single piece.
2.02.00	**Centrifugal Fans**
2.02.01	The fan units shall be centrifugal type with radial bladed impeller. For design, purpose out door ambient temperature shall be taken as 50 deg.C.
2.02.02	Fans shall be manufactured vibration free in operation and shall be designed to limit noise level within limits specified in Data Sheet.
2.02.03	The motor shall be rated for continuous operation and conform to companion electrical specification. However, motor rating shall not be less than the max. power demand throughout the entire range of operation of fan.
2.02.04	All fan mountings shall have adequate arrangement for vibration isolation.
2.02.05	The reverse flow through non-working fan shall be prevented by dampers. The dampers shall be made out of 18 SWG MS sheets.
2.02.06	Design duty point of the fans shall match with the average value of maximum and minimum flow rate of the fan in the stable operation zone.
2.03.00	**Filters**
2.03.01	Metallic Filters
	Metallic cleanable filters shall be provided as required. Max. air velocity considered shall be 2 m/sec.
2.04.00	HDPE Filters
	HDPE filters should have an efficiency of 90% down to 5 microns. Velocity across the filter shall be limited to 2.5 m/sec.
2.04.01	High efficiency filter (for A/C purpose). Filtration efficiency shall not be less than 99% down to 5 microns. Pr. drop across the filter under clean condition shall not be more than 10 mm w.c.

2.05.00	**Packaged Air-Conditioning Unit** **PAC units shall be provided as required.**
2.05.01	PAC units shall be factory tested and assembled self contained units complete with refrigerant compressor, coils, fans, insulation and wiring. Various parts of PAC units wherever required shall be insulated with expanded polyethylene conforming to IS:4671.
2.05.02	The PAC unit shall comprise of an evaporator (indoor air) blower section and an air cooled condenser (outdoor air) section. Heavy gauge steel cabinet finished with paint of approved colour, shall be used to house components of PAC.
2.05.03	The evaporator and condenser coils shall be arranged for direct expansion cooling and shall be formed of aluminum fins mechanically bonded to seamless copper tubes and electrically tinned. The inter-connecting refrigerant circuits shall comprise of hermetically sealed scroll compressor and motor with all necessary isolation valves, with adjustable set point, sight glass, copper tubing and pipeline ancillaries. The condenser coils shall be air cooled by propeller type fans complete with safety guards. The condensing coils shall be suitably arranged to avoid radiant heat pick-up from solar sources.
2.05.04	Condenser capacity control shall be provided by means of fans and 'head pressure' sensing.
2.05.05	The evaporator air blower(s) shall be centrifugal forward curved type belt driven by individual motor(s) and suitable for the external static pressure. The fan assembly shall be isolated from the casing by anti-vibration mounts. The fan/motor drive shall be capable of capacity adjustment by pulley changes within +15% of design duty.
2.05.06	High efficiency filters shall be provided in the main supply air duct and in the fresh air connection to return air duct.
2.06.00	**Construction Requirements**
2.06.01	General construction details of various equipment under Contractor's scope shall be as elaborated in subsequent clauses below.
2.07.00	**Axial Flow Fans** **Axial flow fans shall be provided as required.**
2.07.01	Impellers shall be axial flow type and single piece cast aluminum with aerofoil blades construction. It shall be finished all over and balanced dynamically. Impeller shall be mounted directly on the motor shaft.
2.07.02	Casing shall be of heavy gauge construction properly reinforced for rigidity. It shall be provided with suitable supports. Access door shall be provided in the casing for easy access to motor and impeller. Suitable arrangement for mounting of motor shall be provided.
2.07.03	Rain protection cowls will be designed to suit wall exhausters/supply fans for protecting fans/motors from rain. It will be provided with bird screen.

2.07.04	Inlet cone or bell and outlet cone shall be provided as required. It should be made of G.I. or M.S.
2.07.05	Motor shall be of totally enclosed type complying with the companion electrical specification. Suitable rain/sun shade for motors shall also be provided.
2.08.00	**Centrifugal Fan**
	Centrifugal fans shall be provided as required.
2.08.01	The casing shall be of welded construction fabricated with heavy gauge material. It shall be rigidly reinforced and supported by structural angles. The seams shall be permanently sealed airtight. Split casing shall be provided on larger sizes of fans. Casing drain with valves shall be provided wherever required.
2.08.02	The impeller shall have die formed curved blades fabricated out of MS heavy gauge welded to the rim and back plate to have a non overloading characteristics of the fan. Rim shall be spun to have a smooth contour. If required intermediate stiffening rings shall be required. The impeller, pulley and shaft sleeves shall be secured to the shaft by key and/or nuts. The impeller along with driven pulley shall be dynamically balanced. Fan shaft shall be of EN-8 equivalent.
2.08.03	The bearings shall be self-aligning heavy-duty ball or roller bearings. They shall be adequately supported. They shall be easily accessible and lubricated properly from outside.
2.09.00	**Filters**
2.09.01	**Metallic Filters**
	Metallic cleanable filters shall consist of V-fold galvanised wire mesh inter spaced with a flat layer of galvanised wire mesh. The density of the filter medium shall increase in the direction of airflow. Wire mesh edges shall be suitably hemmed to eliminate the danger of abrasion during handling. Filter medium shall be supported on either side by galvanised expanded metal casing. Filter frame shall be constructed from galvanised sheet of thickness not less than 18 gauge.
2.10.00	HDPE Filters
	HDPE filters shall be provided as required. This shall be constructed of HDPE fabric with continuous water spraying on it from a header for keeping it clean.
2.11.00	**High efficiency filter (for A/C purpose)**
	The media of the filter shall be made from either special synthetic non-woven bond fiber design or made from micro fiber glass media. It shall be supported with GI wire mesh or aluminum mesh and shall be housed in an aluminum sheet frame. It shall be of washable type several times.
2.12.00	**Package A/C Unit**
2.12.01	A separate cubicle shall be provided within the overall casing to house the thermostatic controls, which shall be electric/electronic solid state, prewired and tested. The refrigerant system shall be protected by pressure limiting devices, electric and thermal overloads and unloading facilities to provide the required control range tolerances. A low voltage room thermostat or RTD based temperature sensing

	device shall be provided for wall mounting. The casing shall be fitted with all necessary coil drains and service connections/ entries.
2.12.02	PAC (duty/standby) units shall be selected manually and be ON/OFF switched. The units shall be fully packaged and incorporate integral room air sensing control thermostats and manufacturers work fitted safety interlocks. All controls shall be prewired to unit mounted control/power terminal boxes.
2.13.00	**Ventilation and Air Conditioning system ducting**
2.13.01	All GI sheet metal ductwork required for ventilation and air conditioning system shall be furnished by the supplier. All ducts and plenums unless otherwise noted shall be constructed out of standard quality galvanized steel sheet. All sheet metal ducts shall be fabricated and installed in conformity to the requirements of IS:655. Steel supports for the ductwork shall be furnished as required. The thickness of ducting steel shall be 1 mm min. For ducting with large size exceeding 1300 mm it shall be 1.25 mm. The flexible connection between fan and ducting shall be on teflon impregnated canvas. The zinc coating on GI sheet shall be 275 gm/m^2.

A-10: DATA SHEET: VENTILATION SYSTEM

1.0.0	**GENERAL**	
1.1.0	Mech. Ventilation System	To provide ventilation using fans for specified areas.
1.1.1	No. of air changes per hour	
	(a) For overground building	Not less than 10 supply air changes
	(b) For underground areas	Not less than 15 supply air changes & 7 Exhaust air changes
1.1.2	**Equipment**	
	(1) Underground tunnel	Centrifugal fans/Axial Fans
	(2) All other places	Axial fans, roof ventilators
1.2.0	Pressurised ventilation system	To provide clean air to all MCC / Switchgear buildings
1.2.1	No. of air changes per hour	Not less than 15
1.2.2	Equipment	Centrifugal fans/Axial Fans
1.3.0	**Air-conditioning system**	
1.3.1	Temperature to be maintained	24 ± 1 deg. C
1.3.2	Humidity to be maintained	60 ± 5% relative humidity
1.3.3	Fresh Air intake	Minimum 1.5 air changes per hour.
1.3.4	Equipment	2 x 100 % roof mounted package AC units along with ducting etc. and window AC
1.4.0	**Outside Ambient Conditions**	As per weather data given in project synopsis

2.0.0	**DESIGN & CONSTRUCTION**		
2.1.0	**Roof Ventilators**		
2.1.1	Capacity		10% more of actual requirement
2.1.2	Head		20% more of actual requirement
2.1.3	Speed		
	(a)	Impeller dia above 450 mm	Max. 960 rpm
	(b)	Impeller dia less than or equal to 450 mm	Max. 1440 rpm
	(c)	Critical speed	25% above operating speed.
2.2.0	**Axial Fans**		
2.2.1	Capacity		10% more of actual requirement
2.2.2	Head		20% more of actual requirement
2.2.3	Speed		
	(a)	Impeller dia above 450 mm	Max. 960 rpm
	(b)	Impeller dia less than or equal to 450 mm	Max. 1440 rpm
	(c)	Critical speed	25% above operating speed.
2.3.0	**Centrifugal Fans**		
2.3.1	Capacity		10% more of actual requirement
2.3.2	Head		20% more than actual requirement
2.3.3	Speed		Max. 1500 rpm
2.3.4	Outdoor temperature		50 deg.C.
2.3.5	Rating		Continuous

2.4.0	**Packaged Air-Conditioning Unit**		
2.4.1	Type		Roof top mounting
2.4.2	Service/application	Continuous, round the clock.	
2.4.3	Capacity		
	(i)	TR	Suitable
	(ii)	CFM	Suitable
2.4.4	Type of compressor		Hermetically sealed scroll compressor
2.4.5	Condenser		Air cooled type
2.4.6	Fan		Forward curved centrifugal fan
2.4.7	Filter		High efficiency filter
2.4.8	Cooling Coil		
	(a)	Type	Direct Expansion
	(b)	Material	Copper
	(c)	Fins	Aluminum mechanically bonded.
2.4.9	Refrigerant Piping		Copper
2.4.10	Insulation for PAC parts		Expanded polyethylene of density at least 15 kg/cub.m.
2.5.0	**Filters**		
2.5.1.	Metallic Filters		
	(1)	Max. air velocity	2m/sec.
2.5.2	HDPE filters		
	(1)	Efficiency	90% down to 5 microns
	(3)	Testing	As per BS 2831 / Sqv.
2.5.3	High Efficiency Filter		

		(1)	Efficiency	99% down to 5 microns.
		(2)	Pr. drop across	10 mm W.C.
		(3)	Testing	As per BS 2831 / Sqv.
	2.6.0	**Insulation for A/C Ducting Resin Bonded Mineral wool as per IS:8183**		
	2.6.1	Density		24 kg/cub.m
	2.6.2	Thermal conductivity		0.49 mw/cm deg.C

A-11: DUST CONTROL AND MISCELLANEOUS SYSTEM

1.01.00 GENERAL

1.01.00 INTENT OF SPECIFICATION

1.01.01 The specification is intended to cover design, engineering, manufacture, supply, erection, testing and commissioning of the complete, Dust Control and Miscellaneous Systems as specified hereinafter required for the Limestone Handling Plant.

The Contractor shall refer to the other sections and scheme indicated in the tender rawings to appraise himself of the work and scope of supply of the other Contractors/Employer's and shall coordinate his work with the work of other Contractors.

1.01.02 **General Information/Description**

1.01.03 **Dust Control System**

The dust control system to be furnished under this specification is required for control of fugitive dust emissions from dust generation points such as transfer points, feeders, crushers etc. Dust control is achieved by dust extraction system in limestone handling system & dust suppression in gypsum handling system.

Contractor shall guarantee and offer dust control system which shall not allow a dust concentration in the ambient air inside the buildings more than acceptable limits as per Employer approved guidelines or any internationally recognized hygienic Standards/Codes.

The Capacity of dust control system specified elsewhere is for Contractor's guidance only. Contractor shall provide adequately sized fool proof dust control systems the performance of which should be guaranteed by the Contractor. However, the capacity of the offered system shall not be less than the specified values. Further, for computation of design capacity of the pumps, permanent recirculation lines as shown in tender drawings shall also be considered.

1.01.04 **Miscellaneous Systems**

Service water system, potable water system, cooling water system & sump pumps shall be provided as specified elsewhere in this specification and as indicated in tender drawings.

DUST SUPPRESSION (Fog/Mist type)

Complete with water supply system, pressure regulating units, flow activation system, necessary instrumentation for auto & manual operation, drives, pumps, maintenance platforms, along with associates civil/structures & electrical works.

1.02.02 **Sump Pump**

2x100% sump pumps along with level switches and piping up to nearest limestone/gypsum settling pit shall be provided at all locations wherever natural drainage is not possible. Sump pumps along with drain pits shall be provided at other locations also, if required, during detailed engineering stage.

1.02.03 **Service Water System**

Service water distribution system complete with water supply system, valves, quick couplings, hose pipes with nozzle, piping, pumps, drive motors with canopy, couplings with enclosure, electricals, including supporting structures, handling for equipment's, civil and structural works and necessary accessories shall be provided throughout the limestone handling plant area in Contractor's scope.

1.02.04 **Pipings, Fittings, Valves and Specialities**

The material to be supplied for completing the pipe work shall include but not be limited to the following:

(1) Straight piping, bends, tees, elbows, branches, laterals, crosses, reducing unions, couplings, caps, blank flanges, saddles etc. necessary for making reliable piping system.

(2) Gaskets, ring joints, jointing material etc. as required.

(3) Instrument tapping connections, stubs.

(4) Gate / plug, globe and check valves to start/stop, regulate and to prevent back flow.

(5) Duplex Strainers.

(6) Anchors, hangers and supports as required including secondary steel embedment etc.

(7) Bolts, nuts, fasteners as required for interconnection piping, valves and fittings as well as for terminal points.

(8) The entire water piping of SW / PW / CW / DE system shall be routed/supported on concrete pedestal and conveyor galleries. Wherever the layout does not permit the pipes to be routed over ground, the same shall be buried in conformity to the relevant standards & shall be provided with necessary protective coating as per relevant standards and as specified elsewhere in the specification.

(9) Painting, anti-corrosive coatings etc. outside pipes as necessary.

(10) Welding electrodes and welding rods.

(11) The area around storage tanks, strainers, valves etc. (located out side pump house) shall be paved.

1.03.00 Terminal Points

Employer shall provide supply of water for dust extraction system, service water, potable water at terminal point as elaborated elsewhere. Beyond the terminal point, the complete pipe work for water & air along with associated valves, specialties, instruments, fittings and supports, pumps, tanks, etc. as required for the satisfactory operation of dust control, service water, potable water, cooling water & dust extraction systems shall be furnished by the Contractor.

1.04.00 Codes and Standards

The design, manufacture, inspection and testing of Dust Control & Miscellaneous Systems shall comply with all the currently applicable statutes, regulations and safety codes in the locality where the equipment is to be installed. The Dust Control & Miscellaneous Systems shall conform to the latest edition of the following standards and codes. Other internationally acceptable standards/codes, which ensure equal or higher performance than those specified, shall also be accepted. Nothing in this specification shall be construed to relieve the contractor of the required statutory responsibility. In case of any conflict in the standard and this specification, the decision of the Employer shall be final and binding.

IS:778 : Gun Metal gate, globe & check valves for general purpose.

BS:5150 :Cast Iron Gate Valve for water works purposes

BS:5152 :Cast Iron Globe Valve for water works purposes

BS:5312 :Cast Iron Check Valve for water works purposes

IS:1239 : Mild Steel tubes & fittings.

IS:2379 :Colour for the identification of pipe line.

IS:2906 :Sluice valves for water work purposes.

IS:3589 :Electrically welded steel pipes for water, gas & sewage (200 to 2000 mm)

IS:5312 : Swing check type reflux (non return) valves.

IS:1520 : Horizontal centrifugal pump for clean, cold fresh water.

IS:5120 :Centrifugal pump for clean, cold & fresh water.

BS: 5169 & BS:1123 : Air Receivers.

ANSI B 31.1:Code for pressure piping.

Hydraulic institute Standards of U.S.A.

1.05.00 DESIGN REQUIREMENT

Dust extraction system for Limestone Handling area:

Dust extraction system for limestone handling system shall be dry type comprising of dust collection hoods, ducting, fans, bag filter and dust collection hopper. The limestone dust collected in dust collection hopper shall discharge to the conveyor leaving the building.

Limestone storage area dust extraction system:

a) For dust control in limestone storage shed during stacking and handling of limestone, fans, ducting and bag filters with collection hopper shall be provided.

The dust collected in the dust collection hoppers shall be discharged to the reclaim conveyor below the shed.

b) For the paddle feeder provided for the reclaim hopper below the limestone storage shed, the dust extraction system comprising of suction hood, ducting and trolley mounted dust collection hopper with bag filters shall be provided. The dust collection hopper shall be periodically emptied back to the reclaim conveyor.

Fog/Mist type Dust Suppression

1.05.01 At gypsum handling area, fog/mist type dust suppression system shall be provided which comprises spray nozzles discharging plain water. This fog shall be discharged through spray heads at the dust suppression zones.

The dust suppression system shall consist of the following:

(a) Fogging system & controls consisting of:

(i) Spray bar assemblies.

(ii) Pressure regulating units

(iii) Flow activation system

(iv) Instrumentation and valves for auto spray

1.05.02 Each spray head in gypsum Handling Plant shall have a provision for installing of pressure gauge whenever required. Further, pressure gauges shall be provided at least at two locations.

1.05.03 Each spray head in gypsum Handling Plant shall have a provision for installing a pressure gauge whenever required. Further, pressure gauges shall be provided at least at two locations.

1.05.04 **Sump Pumps**

Sump pumps alongwith level switches & piping upto nearest limestone & gypsum settling pit shall be provided at all locations wherever natural drainage is not possible.

The capacity of each pump shall not be less than 50 M^3/hr. Minimum 10% margin on capacity and 20% margin on computed head shall be considered for selection of pumps.

Size of the drain pit shall not be less than 2.0 meters x 2.0 meters x 1.8 meters deep. One no. of settling pit shall also be provided before sump pit so that water without heavy limestone particles goes into sump pump pit. High and low level switches shall be provided in the sump pump pit.

1.05.05 Service Water (SW) System

Service water connections are to be provided in conveyor galleries and tunnels at 50 meter intervals. Adequate number of these connections shall be provided in all transfer houses with minimum one no. at each floor and with minimum two (2) nos. at each floor in crusher house. Each connection shall be provided with one (1) no.

	32 NB globe valve and quick coupling. One (1) no. hose pipe with nozzle shall be provided in each building.
	Service water distribution system shall be designed considering the water scheme and water requirement indicated in tender drawings.
1.05.06	**Potable water (PW) system**
	Potable water connections are to be provided in all transfer points, wagon tippler top, crusher house, all tripper floors, the machinery well at both ends of track hopper, track hopper top at both ends and all control rooms/MCC rooms and toilets etc.
	Water shall be drawn from the water storage tank by electric motor driven pumps and discharged via a pipe work system to the overhead drinking water storage PVC tanks of 250 litres capacities. The drinking water storage tanks shall have provision for maintenance & drain.
1.05.07	Hoists with monorail of adequate capacity shall be provided in the service water/dust suppression/potable water pump houses.
1.06.00	**CONSTRUCTION REQUIREMENT**
1.06.01	**Water Supply Pumps**
1.06.01.01	Water supply pumps shall be provided as required.
1.06.01.02	The pumps shall be complete with drive motors, baseplate and other accessories. The constructional features of the pump shall be as follows:
	a). Pump casing may be axially or radially split. The casing shall be of robust construction. Casing drain and vent connections shall be provided.
	b). Impeller shall be made in one piece and securely keyed to the shaft. Locking device shall be provided to prevent its loosening during all conditions of operation.
	c). Wearing rings shall be of renewable type. Opposed wearing surface shall be of hardened material and shall have a hardness difference of at least 50 BHN.
	d). Replaceable shaft sleeves shall be provided to protect the shaft where it passes through bearings and stuffing boxes. The end of the shaft sleeve assembly shall extend through the packing gland. Shaft sleeve shall be securely locked or keyed to the shaft to prevent loosening or rotation. Shaft and shaft sleeves shall be machined and assembled for concentric rotation.
	e). The design of the shaft shall take into consideration the critical speed, which shall be at least 20% away from operating speed.
	f). Pump bearings shall be of antifriction type. Bearings shall be readily accessible without disturbing the alignment of pump.
	g). Packed stuffing boxes shall be of sufficient length to prevent leakage along the shaft and shall be complete with all packing and lantern rings required.

	h). Pumps shall be furnished complete with an approved type of flexible - coupling.
	i). Couplings guards made of expanded metal and bolted to the base plate shall be furnished.
	j). The common base plate for pumps and motor shall be in one piece and shall be made of fabricated steel.
	k). Pump speed shall be less than 1500 rpm for pumps of capacity more than 10 m3/hr.
1.06.01.03	The power, head and flow characteristics of each pump shall be suitable for parallel operation. The Power characteristics of the pumps shall be of non-overloading type.
1.06.01.04	All rotating parts of the pumps shall be statically and dynamically balanced.
1.06.01.05	The motor shall be rated for continuous operation and confirm to companion electrical specification. However, motor rating shall not be less than the max. power demand throughout the entire range of operation of pump.
1.06.01.06	Design duty point of pump shall match with the average value of maximum and minimum flow rates of the pump in the stable operation zone.
1.06.01.07	Materials of construction of pump components shall be as stated in data-sheet to this section.
1.06.02	**Sump Pumps**
1.06.02.01	The pumps shall be of wet pit types, vertical shaft and impeller shall be specially designed to pass large solids or unscreened liquids. The construction and material shall be suitable for pumping limestone/dust contaminated water with a minimum of maintenance. All bearings of the pump shall be located above the water level.
1.06.02.02	The piping system shall be designed to suit operations of pumps including standby pump.
1.06.02.03	Materials of construction of sump pump components shall be as stated in Data sheet of this section.
1.06.03	**Piping, Fittings, Valves and Specialties**
1.06.03.01	**Piping & Fittings**
	(a) Material of construction of piping and fittings shall not be inferior to those given in data sheet of this section.
	(b) All piping shall be capable of withstanding the maximum pressure in the corresponding line at the relevant temperature.
	(c) In general pipe sizes 65 mm NB and larger are to be joined by butt welding and pipe work of size 50 mm NB and below by socket welding/screwed connections. Joints at valves or specialities shall be flanged for sizes 65 mm NB or large and screwed for sizes 50 mm NB and below. All galvanised piping shall be joined by screwed connections. Minimum pipe diameter selected for DS/SW/PW/Cooling Water System (along with branch pipes)

shall be 32 NB. However, for dry fog dust suppression system minimum pipe size shall be 20NB.

(d) End preparation for butt welding shall be done by machine/flame cutting. Socket weld and preparation shall be saw/machine cut.

(e) Hangers and supports shall be capable of carrying the sum of all concurrently acting loads. They shall be designed to provide the required supporting effects and allow pipe line movements as necessary. All guides, anchors, braces, dampers, expansion joints and structural steel to be attached to the building/structure, trenches etc. shall be provided.

(f) All piping shall be routed on ground on concrete pedestals and at road crossings, these shall be buried through hume pipes.

1.06.03.02 **Valves and Specialities**

(a) Valves & Specialities shall be used to start, stop or regulate the flow. All valves/specialities below 50 mm size in service water/dust suppression/ potable water lines should be plug type of proven make.

(b) All valves shall be suitable for most stringent service conditions i.e. flow, temperature and pressure under which they may be required to operate.

(c) Gate/sluice valves shall be used for isolation of flow of pipe lines above 50NB and Globe valves shall be used for regulating the flow.

(d) Valves shall be provided with back seating bush to facilitate gland renewal during full open operation.

(e) All gate and globe valves of size 65 NB and large shall be bolted bonnet, outside screw, rising type with flanged ends. Valves of size 50 NB and smaller shall be with screwed ends.

(f) Valves shall be provided with the following as necessary :

(1) Hand wheel

(2) Position indicator

(3) Draining arrangement.

(g) Material of construction of valves shall not be inferior to those given in data sheet of this section.

(h) Globe valves shall be provided with contoured plug to have well controllability.

(i) Non-return valves shall be swing check type. These valves will have a permanent ‘arrow’ inscription on its body to indicate direction of motion of the fluid.

(j) All valves shall be provided with hand wheel, chain operated, extension spindle and floor stand wherever required so that they can be easily operated either at a lower or higher elevation as the case may be.

(k) Strainer shall be of duplex type designed with 3 way valves so that one filter can be cleaned while the other is in operation. Suitable vent and drain valves shall also be provided. Screen opening area shall be at least four times the pipe cross sectional area. Pressure drop in clean conditions shall not exceed 1.5 MWC at full flow.

(l) Bib cocks provided for potable water system shall be made of Copper Alloy / Cast Iron.

1.06.04 Special cleaning, protection and painting

1.06.04.01 **Piping & Fittings**

(a) Surfaces to be painted shall be thoroughly cleaned of loose mill scale, rust etc. by wire brushing.

(b) For overground exposed steel pipes, one shop and one site coat of red oxide zinc phosphate and two coats of synthetic enamel finishing paints unless specified otherwise shall be applied. A minimum of 120 microns Dry Film Thickness (DFT) after finished coat of paint shall be ensured.

(c) For steel buried pipeline, three (3) coats of heavy duty bitumastic paint shall be applied on the cleaned surface. Finally, it should be wrapped with minimum 3 mm thick bitumen impregnated tar felt. The lap joint of the felt shall be generally touched with heavy duty bitumastic paint.

A-11: DATA SHEET: DUST CONTROL & MISCELLANEOUS SYSTEM

1.0.0	**GENERAL**	
1.1.0	Dust Control	Dust extraction for limestone Dust suppression for gypsum
1.2.0	Miscellaneous systems	Service water system, Potable water system, Cooling water system & Sump pumps.
2.0.0	**DESIGN REQUIREMENT**	
2.1.0	Dust Suppression	
2.1.1	Operation	Water sprayed through nozzles.
2.1.2	Pumps	2x100% for water
2.1.3	Spray Head	
	Minimum No. of nozzles per spray head	4 (Four)
2.1.4	Minimum Pressure at inlet of spray nozzles	2.5 kg/sq. cm
2.1.5	Nozzles	Fogging type
2.1.6	Flow from each nozzle	2.0 Lpm
2.5.0	**Sumps Pumps**	
	(i) Type	2x100% electric motor driven
	(ii) Capacity	50 cub.m/hr minimum with 10% margin
	(iii) Head	20% margin on computed head
2.5.1	Drain Pits	Minimum 2 x 2 x 1.8 mts. and 1 No. settling pit for slurry & high/low level switches in drain pit. Decanted water from settling pit shall be pumped back to FGD system for reuse

2.5.2	Piping	To nearest plant drain
2.6.0	**Service Water System**	
2.6.1	Water connections	
	(a) Conveyor Galleries and tunnels	every 50 m
	(b) Transfer points & Drive house	Min. 1 no. at every floor
	(c) Crusher House	Min. 2 nos. at every floor
2.6.2	Connection details	32 NB plug valve
2.6.3	Hose pipes with hose reel	One in each building of 25 mtr. Length with nozzle
2.7.0	**Potable Water System**	
2.7.1	Pumps	2 X 100% electric motor driven
2.7.2	Water connections	
	a) Transfer points & Drive House	Minimum one (1) no. at each floor
	(b) Crusher house	Minimum two (2) no. at each floor
	(c) Tripper floor	Minimum one (1) no. at every tripper bay.
	(d) Machinery wells	Minimum one (1) connection at each machinery well in track hopper
	(e) Control room	Minimum one (1) no. at each floor
	(f) MCC rooms and toilets	Minimum one (1) no. each
4.0.0	**CONSTRUCTION REQUIREMENTS**	
3.1.0	Water Supply Pumps for DS/SW/PW/CW	
3.1.1	Casing	Axial or radially split with drain & vent connection

3.1.2	Impeller	One piece, keyed to shaft along with locking device
3.1.3	Shaft	Critical speed atleast 20% away from operating speed
3.1.4	Shaft sleeves	at bearings & stuffing boxes.
3.1.5	Bearings	Antifriction type
3.1.6	Wearing rings	Renewable type (preferable)
3.1.7	Pump speed	Below 1500 rpm for capacity more than 10 cub. m/hr.
3.1.8	Head flow characteristics	Suitable for parallel operation.
3.1.9	Materials	
	(a) Casing	Cast Iron to IS:210, FG 260
	(b) Impeller	Bronze conforming to Gr.I of IS:318
	(c) Impeller Wearing ring	Bronze conforming to Gr.I of IS:318
	(d) Casing Wearing ring	Bronze conforming to Gr.I of IS:318
	(e) Shaft	Medium carbon steel
	(f) Shaft sleeve	Stainless steel conforming to AISI-416 hardened.
	(g) Gland packing	Impregnated teflon
3.2.0	**Sump Pumps**	
3.2.1	Type	Wet pit type vertical shaft
3.2.2	Duty	Capacity to handle large solids or unscreened liquid.
3.2.3	Materials	
	(a) Casing and rotor housing	Ni-Cast Iron (350 BHN)
	(b) Rotor	Ni-Cast Iron (350 BHN)
	(c) Shaft	Medium carbon steel

	(d) Gland	Bronze
	(e) Wearing rings	Stainless steel
	(f) Shaft enclosing tube	Carbon steel
3.3.0	**Pipings & Fittings**	
3.3.1	Joints	
	(i) Pipe to pipe	
	Pipe size $\leq$ 50 NB	Socket welding/screwed
	Pipe size $\geq$ 65 NB	Butt welding
	(ii) Pipe to valves	
	Pipe size $\leq$ 50 NB	Screwed
	Pipe size $\geq$ 65 NB	Flanged
3.3.2	Isolation of flow	Plug / Gate / Sluice valves
3.3.3	Regulation of flow	Globe Valve
3.3.4	Valves	
	(i) Size > 65 NB	Bolted bonnet outside screw rising type.
	(iii) Size < 50 NB	Union bonnet with screwed ends for Globe valve & screwed ends for plug valve
3.3.5	Materials for Pipework	
	(a) For sizes 200 NB and Larger	ERW carbon steel pipes to API-5L-Gr.B/IS:3589 with minimum thickness 6.35 mm
	(b) For sizes 150 NB to 65 NB	ERW carbon steel black pipes to IS:1239 (Part-Heavy class).
	(c) For sizes below 65 NB	ERW carbon steel galvanized pipes to IS:1239 (Part-I) Heavy class.

3.3.6	Materials for Valves & Specialities		
	(a)	Cast Iron Valves	65 NB and above
	(i)	Body and bonnet	Cast Iron to IS:210, Gr.FG-200
	(ii)	Disc for non- return	Cast Iron to IS:210, Gr.FG-200 valves
	(iii)	Seating surfaces and ring	13% chromium steel
	(iv)	Hinge pin for non return valves	Stainless steel type AISI-316
	(v)	Stem for gate and globe valves	13% chromium steel
	(vi)	Back seat bush	13% chromium steel
	(a)	**Gun metal valves (50 NB & below and upto a working pressure of 10 kg/cm2)**	
	(i)	Body	Gun metal to IS:318, Gr-2.
	(ii)	Trim	Gun metal to IS:318, Gr-2.
	(b)	Duplex Strainer	
	(i)	Body	MS fabricated
	(ii)	Strainer	Stainless steel type element AISI-316
	(c)	Pressure Gauge/Switch (to be provided with isolating valves, gauge cock, snubber and syphon)	
	(i)	Dial size	150 mm
	(ii)	Accuracy	(+/-) 1% of range span
	(iii)	Bourdon	AISI 316 SS

	(iv)	Block	AISI 316 SS
	(v)	Movement	AISI 316 SS
	(vi)	Case and Bezel	Die cast Alum. Weather proof case stove enameled block with screwed type inner bezel of ABS plastic and glycerin filled.
	(vii)	No. of contacts	2 NO + 2 NC
	(viii)	Type of contact	Adjustable throughout the range.
	(ix)	Degree of protection	IP. 65
	(d)	**Solenoid valve (to be provided with isolating valve)**	
	(i)	Type	2/2 way Diaphragm type pilot operated
	(ii)	Diaphragm	molded synthetic rubber
	(iii)	Body	Forged brass / SS
	(iv)	Pressure	0.5 to 10 kg/cm2
	(v)	Protection Class	IP 65
	(e)	**Flow Switch (to be provided with isolating valves)**	
	(i)	Body	Forged steel
	(ii)	Extension Rod/wire	SS-304
	(iii)	Sleeve and Sleeve pipe	SS-304
	(iv)	Cover	Die cast aluminum
	(v)	Max. working pressure	10 kg/sq.cm
	(vi)	Repeatability	± 0.5%
	(vii)	No. of contacts	2 NO + 2 NC

	(viii)	Type of contact	Adjustable throughout the range.
	(ix)	Protection class	IP – 65
	(f)	**Level Switch**	
	(iii)	Wire rope	SS – 316
	(iv)	Spring Housing Spring and sleeve pipe	SS – 316
	(iv)	Cover	Cast Aluminum
	(v)	No. of Contacts	2 NO + 2 NC
	(vi)	Type of Contact	Adjustable throughout the range.
	(viii)	Protection class	IP – 65
	(g)	**Level gauges**	
	(i)	Type	Float type mechanical gauge with arrow scale
	(ii)	Accuracy	(+/-)1% of full scale range
	(iii)	Material of construction	
	(aa)	Float & Guide wire	316 SS
	(bb)	Elbows	Suitable grade of SS
	(cc)	Housing	Mild Steel
	(dd)	Cable fastener	SS 304
	(h)	**Plain water Dust Suppression Nozzles (except for Stockyard DS)**	
	(i)	Type	Fogging, non-clogging type
	(ii)	Material	Stainless Steel
	(iii)	Nozzle housing	To ensure protection of nozzle against damage.

(i) Y Strainer

(a)	Body	SS 304
(b)	Plug	SS 304
(c)	Filter Element	SS 316, 60 mesh

A12: IN-LINE MAGNETIC SEPARATOR / SUSPENDED MAGNET

1.00.00 GENERAL

Inline Magnetic Separators shall be provided for continuous and automatic extraction and discharge of tramp magnetic pieces from limestone being discharged from conveyors as specified. The sets shall be complete in all respects with drives, magnets, inline belts, hoppers, chutes, tramp-iron boxes and all electrical ancillaries like control panels etc. Suspended Magnetic Separator shall be provided for picking up tramp magnetic pieces buried under Lime from moving Lime over Conveyor as specified.

CODES & STANDARD

The design, manufacture, inspection and testing of In line Magnetic Separators shall comply with all the currently applicable statutes, regulations and safety codes in The Magnetic Separators shall conform to the latest edition of standards and codes. Other internationally acceptable standards/codes, which ensure equal or higher performance than those specified, shall also be accepted. Nothing in this specification shall be construed to relieve the contractor of the required statutory responsibility. In case of any conflict in the standard and this specification, the decision of the Engineer shall be final and binding.

1.01.00 DESIGN REQUIREMENT

1.02.00 Inline Magnetic Separator / Suspended Magnet

1.03.00 Magnet core material shall be pure annealed iron or equivalent high permeability magnetic material. The coil shall be of aluminum wire with class 'H' insulation, to limit the absolute temperature of the winding to 140 deg. centigrade. The oil used for cooling the ILMS and SM shall be silicon based.

1.04.00 The 'Force Index' i.e. the product of flux density in gauss and rate of change of flux density w.r.t. distance, at the bottom of falling material trajectory shall be 100,000 (gauss x gauss/inch) minimum in hot condition for mounting height of 100mm above material height in the conveyors carrying Limestone. However, the strength of the magnet shall not be less than 1000 gauss in hot running condition at distance of 100mm above material height in the conveyors. The minimum strength of the magnet shall be 1000 gauss at the specified mounting height at the centre of Belt width. Contractor shall select magnet width to suit above.

Mounting height of 100mm above material height in the conveyors carrying Limestone shall be taken between top of conveyor belt or bottom of falling material trajectory and the surface of magnetic separator belt. Characteristic curve of magnet with the value of flux density varying between 50 mm to face of conveyor belt shall be provided. The cross section of magnet shall be suitably designed to provide sufficient area for magnetising the coil effectively covering full cross section of the discharge material. The magnetic separator shall be located such that it picks-up tramp iron from limestone trajectory after it has been discharged from head pulley.

1.05.00 The tramp magnetic pieces buried under Limestone picked up by the magnetic separator shall be discharged suitably to ensure that it falls into the tramp iron chute,

	which shall be provided upto ground level. All conveyors with magnetic separator at head end shall have non-magnetic SS pulleys. Head pulleys of all conveyors with in line magnetic separator at head end shall be provided with SS shell and end disc. However, hub and shaft shall be of same materials as in other pulleys. (EN-8 or equivalent).
1.06.00	The motor and the gear reduction unit for driving the in-line belt shall be adequately sized with minimum 20% margin to avoid any over loading during operation. Suitable zero speed switch shall be provided. No Chain/belt drives shall be accepted.
1.07.00	The belt shall be designed to withstand high temperature at the bottom of the magnet and any serious damage due to the impact of the sharp edges of the tramp iron. The belt shall be provided with rubber cleats spaced suitably. The belt shall be of fire resistant grade. For other details of belt, refer belt specification as specified else where. Side rollers shall be provided to keep the belt aligned.
1.08.00	The idlers and the pulleys supporting the belt shall be manufactured to the best engineering practices and shall conform to relevant Indian Standards. For details of idlers & pulleys, refer specification as specified else where.
	CONSTRUCTION REQUIREMENT
1.09.00	In-line Magnetic separator / Suspended Magnet
1.10.00	The magnetic separator units shall be supported by suitable structural member from the top by taking support from the roof beams with turn buckle arrangement to facilitate the necessary adjustments during operation. Further, electric Hoists operated cross travel arrangement shall be provided to move magnetic separator away to facilitate maintenance of the conveyor discharge pulley/Belt.
1.11.00	ON/OFF control push buttons with indicating lamps shall be provided at the local station. The materials of chutes and hoppers associated with magnetic separators above the drive floor shall be SS-304 in the magnetic zone. Other chutes shall be of 1 mtr. sq. dimension and shall be made of MS. chutes shall have poking doors at all floors to clear jammed material.
1.12.00	Suitable arrangements shall be provided in the magnet for keeping the coil of the magnet dry from atmospheric condensation when the magnetic separator is not in use.
1.13.00	Protection against high oil temperature in magnet shall be provided.

A-12: DATA SHEET: ILMS/SM

1.0.0	**GENERAL**	
1.1.0	Type	In line or suspended magnet type as specified.
2.0.0	**DESIGN & CONSTRUCTION**	
2.1.0	In-line Magnetic Separator / Suspended Magnet	
2.1.1	(a) Location of ILMS	Over discharge pulley.
	(b) Location of SM	Over Conveyor (as per tender drawing)
2.1.2	Force index (As defined earlier)	Minimum 100,000
2.1.3	Strength of magnet at the specified mounting height	1000 gauss.
2.1.4	Mounting height	As specified
2.1.5	Magnetic Separator Belt	
	(i) Drive Unit	Adequately sized with 20% margin.
	(ii) Belting	Suitable to withstand high temp. & impact of tramp iron. (FR Grade)
	(iii) Discharge	Into Tramp iron chute.
2.2.0	Tramp Iron Items	
	(i) MS cube of 20 mm size	
	(ii) Brake shoe of Railway Wagon (Cast Iron 15 Kg.)	
	(iii) MS plate of 250 x 250 x 100 mm size.	
	(iv) Shovel Teeth and spikes.	

		Material	Carbon Steel
		Size	Typical
	(v)	MS round bar of 50 Kg with L/D ratio not exceeding 5.	
2.3.0	Control		
	Inline Magnetic Separator / Suspended Magnet		Local and remote
2.4.0	Electric Supply 415V, 3 phase, 50 Hz input		Silicon Rectifier units
2.5.0	Location of silicon rectifier unit		Nearby control/MCC room
2.6.0	Handling Arrangement for inline Magnetic separator/Suspended magnet		
	(a)	Height adjustment	With turn buckle arrangement
	(b)	Cross-travel	Electric Hoist operated cross travel facility.

A13: METAL DETECTOR

1.00.00 GENERAL

Metal detectors shall be provided at specified location to detect metallic objects in the limestone stream.

CODES AND STANDARDS

The design, manufacture, inspection and testing of Metal Detectors shall comply with all the currently applicable statutes, regulations and safety codes in the locality where the equipment is to be installed. The Metal Detectors shall conform to the latest edition of standards and codes. Other internationally acceptable standards/codes, which ensure equal or higher performance than those specified, shall also be accepted. Nothing in this specification shall be construed to relieve the contractor of the required statutory responsibility. In case of any conflict in the standard and this specification, the decision of the Employer shall be final and binding.

1.01.00 DESIGN REQUIREMENT

1.01.01 Metal detectors shall have high reliability with enough sensitivity to detect 25mm aluminum sphere below the burden of Limestone in case of synthetic belting. It shall also detect other metals, like brass, copper, stainless steel, manganese steel, bars, scraps etc.

1.01.02 The equipment shall have provision for automatic static calibration with adjustable sensitivity.

1.01.03 Metal detectors shall be completely solid state using latest state of art technology. It shall be suitable for 50℃ ambient and RH of 100%. The search sensor shall be protected from rain and direct sunlight by means of a non metallic covering other than wood. Control unit shall have adjustable controls for sensitivity, ON/OFF push buttons, resettable operation counter, audio-visual alarms local remote selector switch and all other necessary controls for trouble free operation of metal detector. It shall be suitable for mounting on wall, column, structure etc. with IP-65 Degree of protection. It shall be constructed from FRP of thickness not less than 2mm.

1.01.04 The metal detectors shall also have the following features :

(a) The coils shall be protected against being struck by an oversized material/limestone. The coils should have adjustment for magnetite/iron in incoming limestone. It should ignore magnetite/iron and shall distinguish between metal pieces and magnetite/iron.

(b) In order to counteract interference from external sources such as motors, lightning and radio-transmitters, and to nullify the effect of climate changes/aging, dual receiver coils are to be used.

(c) In order to allow passing of steel cord belt and metal belt fasteners without giving alarm and at the same time detecting tramps, suitable arrangements shall be provided.

(d) In case a few non-magnetic idlers or non magnetic deck plates are required, the Contractor shall provide these. However, these shall be metallic. Wood is not to be used.

(e) LED display of COAST COUNT to indicate the number of pieces of tramp iron detected since last reset shall be provided so that the operator is alerted for the pieces of tramps, if any, between tramp marker and coil before restoring conveyor.

(f) TOTAL COUNT, which is not resettable, shall also be provided on the same LED display on demand.

(g) The location of tramp metal pieces shall be indicated by sand bag marker.

CONSTRUCTION REQURIEMENT

1.02.01 Fiber glass enclosure (with IP 65 degree of protection) shall be provided for all type of coils.

1.02.02 Sand bag markers shall be provided.

1.02.03 Local control panel shall be provided with IP:65 degree of protection.

A-13: DATA SHEET : METAL DETECTOR

1.0.0	**GENERAL**	
1.1.0	**Type**	Coil type
2.0.0	**DESIGN & CONSTRUCTION**	
2.1.0	Sensitivity	- 25 mm aluminum sphere below limestone for synthetic belting.
2.2.0	Enclosure	Fiber glass
2.3.0	Control	Through local control panel.
2.4.0	Calibration	Provision for automatic static calibration with adjustable sensitivity.

A-14: LIMESTONE SAMPLING UNIT

1.00.00 GENERAL

a) Limestone Sampling Unit shall be complete with necessary samplers, crushers, flap valves, chutes, hoppers, belt feeders and sample collectors etc. to give samples from any of the two streams running at guaranteed capacity.

b) Bidder shall source Limestone sampling system from a manufacturer / supplier who has engineered and supplied two (2) numbers of limestone sampling systems for sampling Limestone / other bulk mineral from conveyor of 150 MTPH and above and working successfully for two years as on date of bid opening**.**

1. 01.00 CODES AND STANDARDS

The design, manufacture, inspection and testing of limestone Sampling Unit shall comply with all the currently applicable statutes, regulations and safety codes in the locality where the equipment is to be installed. The limestone Sampling Unit shall conform to the latest edition of standards and codes. Other internationally acceptable standards/codes, which ensure equal or higher performance than those specified, shall also be accepted. Nothing in this specification shall be construed to relieve the contractor of the required statutory responsibility. In case of any conflict in the standard and this specification, the decision of the Employer shall be final and binding.

ASTM-D-2013: Standard Method of Preparing Limestone Samples for Analysis.

ASTM-C-50: Standard practice for sampling, sample preparation, packaging and marking of Limestone and Limestone products.

1.02.00 DESIGN REQUIREMENT

1.02.01 Limestone sampling unit shall be automatic & provided at place specified elsewhere.

1.02.02 The LIMESTONE sampling units suitable to give “Samples” conforming to ASTM-D-2234 shall be selected by the Contractor for taking samples from any of the two streams running at guaranteed capacity. The different Equipment selected for limestone sampling unit shall be such that there shall be no loss of fines and moisture from the samples. The capacity, make and model of all equipments of limestone sampling unit shall be subject to approval of Project Manager.

1.02.03 Limestone lump size after crusher shall be (-) 20mm. The normal input feed size shall be considered as (-) 250 mm for limestone sampling unit before lime crusher.

1.02.04 Primary samplers (separate for each conveyor) shall be rugged, able to withstand severe shock loads and operate trouble free.

1.02.05 Belt feeders shall be provided for entire sampling path upto sample collector. The feeders shall meter the flow accurately, produce a non-plugging condition and resist sticky and wet LIMESTONE.

1.02.06	For rejects path also, belt feeders shall be preferred. Screw conveyors for the same shall be accepted only where space constraints do not permit distribution of LIMESTONE rejects to receiving conveyors below.
1.02.07	Sample crushers (make subject to Employer's approval) shall be provided for reducing the main input feed limestone to 90% minus 6 mesh size. Single stage crushing shall be provided. There should be no re-circulation of fines in the crushers.
1.02.08	'Lot size' shall be equivalent LIMESTONE quantity handled in 8 hours operation assuming average conveyor loading at 75% of rated conveyor capacity.
	CONSTRUCTION REQUIREMENT
1.03.01	The traversing mechanism and all electric parts shall have dust tight protection.
1.03.02	Belt feeders shall be positively self cleaning and have dust tight construction. It shall be provided with flanged belt, rubber lagged head pulleys and inspection doors. No chain/belt drives shall be accepted.
1.03.03	The crusher's base should be built of reinforced concrete and be sufficiently large in mass.
1.03.04	The primary samplers shall be of dust tight construction and self contained type.
1.03.05	The sample chutes shall have minimum valley angle of 60 degrees to horizontal and shall be of stainless steel plates. The chutes shall be suitable to handle wet sticky LIMESTONE as specified elsewhere. The welding of chutes shall be done externally only. The inside surface of the material near welds shall be smooth. Radius at corners not less than 1" shall be provided in chute work. All solid connected members shall be by means of bolting flanges with atleast 6 mm thick standard grade neoprene gasket material between the metal flanges. No control gates to regulate the flow of material shall be incorporated in the chute work. The chute shall be so designed that there shall be no clogging and free flow of limestone shall take place.
1.03.06	Bias connections shall be provided at suitable locations. The materials rejected from samplers shall be returned to main conveyor stream.
1.03.07	Minimum 4 nos. sample collecting bins shall be provided with auto indexing. The bins shall be provided with air tight connection.
1.03.08	The system shall be suitable for operation through Employer's DCS/DDCMIS.

A-14: DATA SHEET: LIMESTONE SAMPLING UNIT

1.0.0	**GENERAL**	
1.1.0	Type	Automatic
2.0.0	**DESIGN & CONSTRUCTION**	
2.1.0	Codes & Standard	ASTM C-50
2.2.0	Uncrushed Limestone feed size	(-) 250 mm
	Crushed Limestone feed size	(-) 20 mm
3.0.0	**CHUTES**	
3.3.1	Min. angle	60 deg
3.3.2	Cross section	Square/rectangular with rounded corners.
3.3.3	Joints	Bolted flanges with 6 mm thick standard grade neoprene gasket.
4.0.0	**CRUSHER**	
4.4.1	Uncrushed Limestone feed size	(-) 250 mm
	Crushed Limestone feed size	(-) 20 mm
4.4.2	Output size	ASTM C-50
4.4.3	Stages of size reduction	Single stage crushing
5.0.0	**BELT FEEDER**	
5.5.1	Belt	Flanged type, FR grade
5.5.2	Pulleys	Rubber lagged head pulley
5.5.3	Drive	Electric Motor

A-15: ELEVATOR

1.00.01 ELEVATOR

Elevator shall be of conventional type for crusher house. The elevator shall meet the quality of international standard.

Bidder to provide conventional type elevator as per following specifications.

Elevators shall be designed based on following criteria :

i)	Design/construction/installation codes.	Latest edition of IS: 14665 (all parts)
ii)	Load carrying capacity	1088 kgs.(16 persons)
iii)	Rated speed	1.0 m/sec.
iv)	Position of machine room	Directly above the elevator shaft.
v)	Machine room	Window air conditioner of minimum 2T capacity per elevator shall be provided by bidder.

CONSTRUCTION

Construction of the elevators shall specifically meet all requirements of the codes indicated and shall have following additional features:

i)	Flooring of Cabin	Vitrified ceramic tiles of mat finish.
ii)	Car enclosure & car panels	Stainless Steel
iii)	Handrails on 3 sides	Mirror Stainless Steel
iv)	False ceiling	Powder painted
v)	Car opening & Hoist way opening	Protected by central opening sliding Stainless Steel door

vi)	CABIN ACCESSORIES	The following accessories shall : a) Recessed fluorescent light fittings on car floor. b) Car control station c) Emergency stop switch. d) 5/15A, 3 pin plug socket with switch on top of lift car. e) switches with Braille characters.

1. AUTOMATIC RESCUE DEVICE (ARD) - (BATTERY DRIVE):
   Bidder to provide a modern Advanced electronic drive system of "RESCUING Passenger trapped in a ELEVATOR".

2. EMERGENCY SAFETY DEVICES :

   The lift shall be provided with safety Device attached to the lift car frame and placed beneath the car. The safety device shall be capable of stopping and sustaining the lift car up at governor tripping speed with full rated load in car

3. Elevator shall have Floor announcement system & Braille switches

   No. of floors to be served shall be as per the requirement of the Employer. The final landing elevations for all buildings shall be subject to approval by the Employer after award.

   Guide rails complete with supporting brackets for the car and counter weights. Granite tiles to be provided for cabin flooring and bidder shall take care of the height of same in selecting counter weights.

Elevator drive machines complete with electric motor, reduction gear unit, suspension ropes, buffers for the cars and the counter weights and other drive and control mechanism. All foundation anchor bolts, sleeves, anchoring steel and any item required to complete the job satisfactorily shall be provided by the bidder. The bidder shall also provide for the grouting of anchor bolts, sleeves, anchoring steel, etc. and other anchorages any other steel works as well as all other accessories/components not specified in the specification but necessary for making the Elevator complete.

All building work including the supply of steel items, associated with installation of equipment in the machine room hoist way, hoist way door, frames and Elevator pit, shall form part of bidders scope of service, Bidder shall also provide the Elevator-well complete with foundation and brick walls around the lit-well together with overhead machine room. The machine room will be provided with R.C.C. floor slab with necessary pockets for anchor bolts and slots.

OPERATION

Elevator shall have provisions to meet following operational requirements :

a) Selective collective, automatic operation with or without attendant through

illuminated push button station located inside the lift car.

b) Door operating shall be automatic door operation and electronic door protection system for opening/closing of car and landing doors.

c) Bidder shall provide car operating panel with luminous buttons, car position indication in car (both visual and audio) combined with direction arrows, overload warning indicator, battery operated alarm bell and emergency light and fan & hands free speaker telephone set with suitable battery, charger & controls.

d) Bidder shall provide emergency indicator to indicate the location of elevator in case of elevator being stuck up between the floors through automatic flashers (both audio & visual)

e) Bidder shall provide electronic door detector (Infra red curtain type).

f) Two push buttons, one for upward movement and the other for downward movement at each intermediate landing and one push button at each terminal landing shall be provided in order to call the car. Digital hall position indicator at all floors, tell lights at all floors shall also be provided by the bidder.

g) For facilitating the movement of visually & hearing impaired persons, hall lantern and car arrival chimes shall be provided.

h) All fixtures shall be in stainless steel face plates.

i) Push buttons shall be fixed in the car for holding the doors open for any length of the time required.

j) All other safety/protection/operation interlocks as required by IS:14665 (latest edition).

Elevator Electricals:

(a) Electric motor:

The driving motors shall conform to I.S 325 and suitable for the Variable Voltage Variable Frequency (VVVF) application. All motors shall be squirrel cage induction type, suitable for operation at 415V (+/- 10% variation) , 3 phase, 3 wire, 50HZ (+3% to -5% variation) supply. Motors shall be provided with thermal class 130 (B) or better insulation

(b) Controls:

The controls shall be Variable Voltage and Variable frequency type and shall provide smooth and constant acceleration and retardation under all conditions of operation. Suitable control panel shall be provided in the machine room.

(c) Cables and wiring:

All the cables except trailing cables shall be as per IS:1554-1 or IS-7098-I. the PVC outer sheath of these cables shall be flame retardant, low smoke (FRLS) type with the following FRLS properties.

(i) Oxygen index of min. 29 (as per IS:10810 Part-58)

(ii) Acid gas emission of max. 20% (as per IEC-754-I).

(iii) Smoke density rating shall not be more than 60% (as per ASTMD-2843).

The circular trailing cables shall be either in accordance with IS 4289 Part-I (Elastomer insulated) or IS-4289 Part-II (PVC insulated). The flat type railing cables if offered shall be in accordance with IEC-60227-6.

All wiring / cabling between the equipments in the lift machine room and that between the machine room and equipments in the lift well and at the landings shall be wired in HDP conduits/ galvanized steel conduits to be supplied by the contractor. Alternatively armored cables may be used.

(d) Earthing:

The elevator structures and all Electrical equipment, including metal conduits shall be effectively earthed with the earth conductors provided in the machine room as per IS: 3043.

i) Type of services : Passenger cum goods.

ii) Load carrying capacity: As per specification

iii) Rated speed : One (1) meter/second

iv) Total Travel : Crusher house-As per layout
TP preceding main plant TPs - As per layout

v) No. of floor to be served: Crusher house , TP preceding main plant TPs -To be decided during detailed engineering.

vi) Method of control : Variable voltage variable frequency (VVVF)

vii) Position of M/c room : Directly above lift shaft

viii) Size of platform: As per IS14665 & manufacturer's standard latest.

ix) Size of lift well: -do-

All mechanical and electrical operating devices and Trailing cable shall be designed for outdoor operation with dusty and high humidity conditions and shall operate equally well in any ambient temperature as per project synopsis. Additionally, all mechanical and electrical components of the elevator shall be designed to withstand a temperature of 50°C ambient.

DATA SHEET : ELEVATOR

1.0.0	**GENERAL**	
1.1.0	Type of Service	Passenger-Cum-Goods
2.0.0	**DESIGN & CONSTRUCTION**	
2.1.0	Carrying capacity	1088 Kg(16 persons)
2.2.0	Rated speed	1 mtr / sec.
2.3.0	Total Travel	Shall be as per actual dimension of the Building
2.4.0	No. of floors to be served	As per requirement
2.5.0	Entrance	As per requirement
2.6.0	Method of control	Variable voltage variable frequency (VVVF)
2.7.0	Position of M/c room	Directly above lift shaft
2.8.0	Size of platform	As per IS14665 & manufacturer's standard latest.
2.9.0	Size of lift well	As per IS14665 & manufacturer's standard latest.
2.10.0	Specification code	As per IS: 14665 (5 parts) (Latest Edition).
2.11.0	Design seismic co-efficient	According to the IS 1893-1977

A 16: LHP/ GHP BUILDINGS

1.00.00 GENERAL

Various buildings in limestone/ gypsum handling plant like transfer houses, crusher house, control rooms, MCC rooms complete with all associated civil foundations and other civil, structural and architectural works shall be provided by the Contractor as per the specification. Construction/fabrication/erection and designing aspects of various buildings shall be as per the Civil/Structural specifications.

1.01.00 Codes and Standards

The design and construction of LHP/ GHP Buildings shall comply with all the currently applicable statutes, regulations and safety codes in the locality where the equipment is to be installed. The LHP/ GHP Buildings shall conform to the latest edition of the Indian standards and codes. Other internationally acceptable standards/ codes, which ensure equal or higher performance than those specified, shall also be accepted. Nothing in this specification shall be construed to relieve the contractor of the required statutory responsibility. In case of any conflict in the standards and this specification, the decision in the Employer shall be final and binding.

1.02.00 Design Requirements

All LHP/ GHP Buildings shall have sufficient space to accommodate the entire equipment like head end, drive unit and tail end of various conveyors, crushers, hoppers, chutes, control equipments, MCCs, batteries, supports for conveyor bridges, tensioning arrangements, approach/maintenance platforms with ladders, external / internal stairs, handrails, RCC floors, foundations etc. Moreover, ample space shall be provided for maintenance purposes. Outside stairs to transfer points and crusher house shall be open type. However, a weather canopy shall be provided at the top.

Mechanical Handling arrangements with adequate monorails etc. shall be furnished for servicing and installation of various housed equipment as described elsewhere. Building floors shall be washed periodically with water for which necessary slope & drains shall be provided from each floor leading to minimum 4 nos down comers of minimum 273mm OD each building. However for MCC, control buildings and pump houses, minimum 150 mm dia, 4 nos galvanized MS pipes conforming to IS :1239 shall be provided. The system shall be designed considering water mixed with limestone. A drain pit shall be provided near each building to collect water/limestone slurry. Overflow from this pit shall be connected to nearest drain. 1 mtr x 1 mtr size dust/debris MS chutes from all the floors to ground floor shall be provided at all buildings/transfer houses and crusher house. The plate thickness shall note be less than 6mm. Various dimensions and relative elevations shown in tender drgs. for various Buildings / structures are minimum acceptable to the Employer. However, final dimensions for various buildings/structures and relative elevations shall be decided based on actual details/maintenance requirements of contractor's equipment to meet technical specification requirements without any implication to the Employer. The sizes of these houses shall be approved by the Employer at the stage of detailed employer. Openings in the floors of LHP/ GHP Buildings (i.e. TPs/CH etc.) shall be provided with curb of 100mm high to avoid water falling down to lower floors. Vertical bracings in transfer points and crusher house shall be provided only along four sides. No bracing system projecting outside the building shall be allowed. Floor at ground shall be provided in all transfer points, crusher house, ground conveyors etc. Level of floor at ground shall

be 500 mm above ground/grade level unless noted otherwise. For enclosed ground conveyor 750mm wide plinth protection along with drainage arrangement shall be provided along the conveyor on both sides. Suitable opening at every 50mtr interval shall be provided on either side in a staggered manner for exit / entry of personals. Necessary drains must be provided all along the floors of ground conveyor. The accessories for dust control & miscellaneous system like water pumps etc. shall be housed in separate pump houses. For areas where ground floor is located less than 500 mm above ground level/grade level, outside face of the brickwalls shall be plastered with rich cement-sand mortar (1:4) with neat cement finishing over it for a height of 500 mm above ground level/grade level. Toilet with potable water facilities shall be provided in all MCC Control Rooms, crusher houses and potable water shall also be provided at all transfer houses, crusher house, all tripper floors in bunker bay, MUH top, wagon tippler, the machinery well areas at the both ends of at pent house. All associated civil & structural work for the elevator, elevator stairs, platforms at Various landings shall be supplied for crusher house and Transfer Point, where elevator is provided. Necessary facilities for ventilation, tunnels, underground buildings, control/MCC rooms, Bunker bay shall be provided as specified elsewhere. External fire escape stair case along with internal staircase shall be provided for Crusher house and for MCC/control buildings having first floor. External fire escape staircase shall be provided for other electrical building. 5 mtr wide paving beyond the surface drains shall be done around all transfer points, Crusher house for movement of trucks. The approach for trucks should be provided around transfer point, crusher house and upto hoist lifting area. All building shall have the fire protection provisions to meet TAC and IS – 3034 regulations.

1.03.00 Construction Requirements

1.03.01 Transfer Houses

All overground buildings shall be of steel frame construction. All underground & partially underground structures shall be entirely in RCC. External staircases shall be provided for all transfer points. The transfer houses shall have permanently colour coated steel sheet enclosure with steel framed doors and louvered windows.

1.04.00 Crusher House

The crusher house shall have permanently colour coated steel sheet enclosure with steel framed doors and louvered windows.

1.05.00 Control / MCC Rooms

Control rooms, MCC rooms shall be of RCC construction with Brick enclosure. Fire safety wall in/around transformer yards shall be as per detailed engineering. MCC/Switchgear rooms shall be kept pressurised with dust free air by way of pressurized ventilation. Office room and Control Rooms shall be provided with PAC (Packaged Air Conditioning) units. Air-conditioned areas of LHP/ GHP Buildings shall have double glass windows. Roofs/sidewalls shall be provided with insulation to minimise the heat load. All frames of doors and windows shall be of extruded aluminum and shall be capable of isolating the conditioned space. All AC Control rooms & MCC rooms shall have two independent entries through door.

DATA SHEET : LHP/ GHP BUILDING

1.0.0	**GENERAL**	
1.1.0	Underground portion of Transfer Houses	RCC Construction
1.2.0	Overground portion of Transfer Houses, Crusher House	Steel Construction
1.3.0	Control/MCC rooms & S&T room	RCC construction
2.0.0	DESIGN & CONSTRUCTION REQUIREMENT	
2.1.0	Transfer Houses & Crusher House	
2.1.1	Space requirement	To accommodate all equipments drive units, head/ tail ends of conveyors transfer chutes etc. and to provide adequate space for maintenance.
2.1.2	(i) Floors	RCC construction with facility to wash the floors. Min. slope of 1:80 for floors in TPs and 1:100 for floors in crusher house shall be provided towards drain pipes.
	(ii) Roof	As per Specification IIID-01 of this specification.
2.1.3	Walls/Enclosure	Permanently color coated cladding
2.1.4	Stairs	Steel construction with minimum 1000 mm width.
2.1.5	Doors & Windows	Steel construction

2.1.6	Monorails	Capacity as per equipment installed
2.1.7	Drainage	From each floor to drain pit suitable to handle limestone slurry.
2.1.8	Elevators	Necessary space, platforms / interconnections with the respective buildings, machine room etc. wherever applicable.
2.1.9	Vertical bracing	Only along four sides.
2.1.10	Maintenance platform with handrails.	Chequered plate floors Min.1500 mm wide
2.1.11	Flooring	50 mm thick metallic hardener like ironite floor finish.
2.1.12	Level of ground floor	500 mm above ground level.
2.2.0	Control ROOM	
2.2.1	Construction	RCC construction with Brick Enclosure
2.2.2	MCC Rooms building	Pressurized with dust free air
2.2.3	Control Rooms	Air conditioned Environment

A 16: TRAVELLING TRIPPER AND BUNKER SEALING ARRANGEMENT

1.00.00 Mobile Trippers on stacking conveyors along with belt sealing arrangement shall be furnished and erected complete with rails, including necessary supporting structures, approach/ maintenance platforms with ladders and hand railings, trailing cables, all electricals including machine mounted local control panel & control panel on one end of Bunker. The Mobile tripper on stacking conveyors shall be motor driven type. The tripper shall have provision for dropping limestone from conveyor onto both sides of tripper to the storage shed. The rating of tripper travel motor shall be adequate to move the tripper smoothly either in same or opposite direction to belt direction under fully loaded conditions. Adhesive weight requirement and tractive effort calculations shall be subject to approval of Employer. Coefficient of adhesion shall be considered as maximum 0.15. Minimum two drive axles shall be provided for tripper travel. Arrangement shall be provided at the starting point of the tripper to avoid folding of belt. In case of tripper running at a speed more than its rated speed due to chute jamming or other reason, conveyor shall trip and annunciation shall appear.

1.01.00 Supply of adequate length of rails to cover the runway length for the motor driven tripper shall be included. The supporting structures for the rails with necessary end stops shall also be supplied under this specification. Suitable belt hold down guide pulley shall be provided over the concave curve of belt over tripper. The travelling trippers shall be provided with fail safe A.C. thruster operated brake of totally enclosed type which shall engage as soon as tripper travel motor stops. A.C. thruster operated rail clamps along with manual Rail clamps on both side of the tripper shall also be provided. Independent motorized linear actuator shall be provided to operate each flap gate of the tripper chute.

1.02.00 The sealing belt shall be of suitable grade (minimum 2 plies) with 5 mm x 5 mm covers (fire resistant) in line with other conveyor belting. The belt shall rest on 20 x 50 mm MS plates spaced at 200 mm placed 50 mm below floor level, provided over the bunker slot on tripper floor for tripper conveyor. The width of the bunker seal belt shall be at least 100 mm more than the bunker slot opening.

1.03.00 The tripper shall run on rails (90 lbs/yard) with double flanged wheels. Rails for tripper travel shall be mounted on supporting structure of respective conveyors. Suitable system having encoders for monitoring position of tripper in DDCMIS shall be provided. In addition, travel end limit switches and end stops shall also be provided. Suitable access platform of chequered plate with ladders, handrailing and walkways on both sides shall be provided for access/maintenance of equipment on tripper. In addition, crossover platform shall be provided with tripper so that operator can cross the belt through the same. 3mm deck plate continuous shall be provided below carrying idlers on the trippers.

Tripper discharge chute shall be of tapered section as shown in the sketch below.

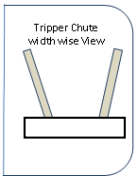

4.7.0 PLOUGH SYSTEM (IF APPLICABLE)

As an alternate to travelling tripper (Alternate option applicable only for limestone mill bunkers) plough type system may be provided by the bidder. The plough type system shall consist of the following.

i. The system shall feed limestone to one bunker at a time.

ii. The plough shall be retractable type.

iii. Shall meet the capacity of the conveyor (150 TPH).

iv. The scraper/plough would normally be kept up in idle position allowing material to pass through and interfere with next lowered scraper/plough. In case material needs to be discharged scraper/plough will be lowered and fixed to that position till material fill up the bunker. The scraper/plough should be motor/cylinder/coil operated for remote operation.

v. The system must contain containment skirt boards with dust seal along the discharge area.

vi. The system shall be capable of unloading minimum 99% amount of limestone passing under it.

vii. However the system shall be complete from operation, maintenance and safety point of view.

DATA SHEET-TRAVELLING TRIPPER

1.0.0	**GENERAL**	
1.1.0	Mobile Tripper	Motor driven type rail mounted.
1.2.0	Bunker Sealing Arrangement	Sealing belt type.
2.0.0	**DESIGN & CONSTRUCTION**	
2.1.0	Mobile Tripper	
2.1.1	Mounting	Rail mounted on rails (90 lbs/yard) with double flanged wheels.
2.1.2	Drive	Motor driven with suitable gearbox. Suitable for minimum 60 starts/hours.
2.1.3	Pulleys	
	(a) Head & Bend Pulleys	As specified elsewhere
2.1.4	Brakes	AC operated electro hydraulic thruster type on either side of tripper.
2.1.5	Clamps	Manual Rail clamps on either side of tripper.
2.1.6	Walkways	Both sides of tripper, 800 mm wide each
2.2.0	Bunker Sealing Arrangement	
2.2.1	Sealing Belt	
	(a) No. of plies	Minimum two
	(b) Top/Bottom cover Thickness	5 mm/5 mm (Fire Resistant)
	(c) Width	At least 100 mm more than bunker slot.
2.2.2	Guide Rollers	As per requirements.
2.2.3	Bunker Slot	
	(a) Width	As per tender drawing
	(b) Cross bars over the slot opening	12 mm x 50mm MS grating

SUB-SECTION-I-M3

AIR CONDITIONING & VENTILATION SYSTEM

1.00.00 **GENERAL**

1.01.00 This section of specification covers details of system specifications, detailing the areas to be air conditioned, basis of design, brief description of the system, equipment and services to be furnished by bidder.

The Design, Engineering, Supply, Construction, Erection, and Testing & Commissioning of all the equipments & works listed here shall be on the basis of single point responsibility in bidder's scope of work for satisfactory completion of the system in all respect.

2.00.00 **AREAS TO BE AIR CONDITIONED**

2.01.00 The areas to be air-conditioned shall be as follows:

a) Air cooled condensing units (D-X type) type air conditioners of minimum 30TR capacity or capacity calculated as per actual heat load calculation whichever is higher with 100% redundancy for each FGD Control room building.

b) Cassette and Hi-wall Air-conditioners for Other auxiliary control room /control room buildings not listed above but covered in the scope of Bidder.

□.00.00 **AREAS TO BE □ENTILATED**

3.01.00 (i) Unitary Air Filtration (UAF) units of min. capacity 75,000 m3/hr or capacity calculated considering 8 air changes per hour whichever is higher, shall be provided for Non-Air Conditioned areas of FGD control building (e.g. Switch gear rooms, cable galleries, etc.)

(ii) Mechanical Ventilation (using Roof extractors/ Supply and/or Exhaust fans) shall be provided for various other areas/buildings in the scope of bidder as under:

a) Grinding system building
b) Gypsum dewatering building
c) Recirculation pump & Oxidation blower/compressor building.

(iii) Toilets etc in above building (i) & (ii). Any other area not listed above but covered in the scope of Bidder.

(iv) For other miscellaneous areas/ buildings not listed above but covered in the scope of Bidder, mechanical type ventilation system using Supply and/or exhaust air fans/ roof exhausters shall be provided.

3.02.00 All non-air conditioned areas covered under this package shall be ventilated by a combination of supply/exhaust fans and fresh air in-take / back draft louvers as detailed below:

S.No	Area	Type of Ventilation system
(i)	General area like pump house, buildings etc	Combination of Supply air fan & Exhaust air fans
(ii)	MCCs and Switchgear room etc	Supply air fan & Back draft dampers
(iii)	Battery rooms & Oil rooms and fumes/odor generat	Combination of Supply air fan & Exhaust air fans. Motors shall be flame proof.
(iv)	Toilet/pantry etc	Propeller type exhaust air fan

4.00.00 EQUIPMENT DESCRIPTION □AIR CONDITIONING SYSTEM

4.01.00 **C□□d□□□□□□ U□□□(A□r-C□□□□d D-□ □□□□)**

Condensing unit

Type : Air cooled scroll type

Vibration isolators : Steel spring / Neoprene rubber cushy foot type with isolation efficiency not less than 85%.

Compressor

Type : The Compressor shall be scroll, serviceable, either hermetic type or semi-hermetic type with automatic capacity control (minimum 3 steps).

Type of drive : Motor driven, direct or through V-belt.

Refrigerant : The refrigerant shall be R-134a/ R-410A/R-407C or any other environment friendly refrigerant.

Accessories : High/Low pressure cutouts, oil pressure switches, relief valves, pressure gauges at each stage, lube oil and control oil pressure gauges, suction & discharge stop valves, Muffler, Crank case heaters, oil filters, magnetic oil separators, temperature indicators for lube oil/heaters, oil level indicators, safety thermostat for crank case heater, vibration isolators, etc.

Motor Rating : 10% more than the power required by the compressor at 50 deg C design ambient temperature.

Capacity : Minimum capacity shall be suitable for the identified/selected at evaporating temperature and

condensing temperature and shall be indicated.

4.02.00 **Air Handling Unit (AHU)**

4.02.01 Each AHU shall consist of casing, fan impeller section, cooling coil section, damper section, steel frame with anti vibration mountings (AVMs) having minimum 85% vibration dampening efficiency and flame retardant, water proof neoprene impregnated flexible connection on fan discharge. Isolation dampers at the suction and discharge of each AHU shall be provided, in case return air duct is directly Connected to AHU. However, in case AHU room is used for return air, isolation dampers are required to be provided only at AHU discharge of each AHU. Pre-filter at the suction and fine (micro-vee type) and absolute (HEPA type) filters (wherever applicable) at the discharge of each individual AHU, and heater section in the common discharge of AHUs shall be provided.

4.02.02 The casing of AHUs shall be of double skin construction. Double skin sandwich panels (inside and outside) shall be fabricated using minimum 0.63 mm (24g) galvanized steel sheet (thickness of galvanization as per manufacturer's standard) , with 25mm thick polyurethane foam insulation of minimum 38 Kg/Cum density in between. Suitable reinforcements shall be provided to give structural strength to prevent any deformation/buckling.

4.02.03 Sloping condensate drain pan shall be made of minimum 1.2 mm thick Stainless Sheet Steel. It shall be isolated from bottom floor panel through 25mm thick heavy duty treated for Fire (TF) quality expanded polystyrene or polyurethane foam. Drain pan shall extend beyond the coil.

4.02.04 Cooling coil (min. 4 row deep) shall be made of seamless copper tubes with aluminium fins firmly bonded to copper tubes and shall be provided with suitable drains and vents connections.

4.02.05 All filter plenum shall be provided with a walking platform inside the plenum chamber for filter cleaning purpose. Inspection door shall be provided at the plenum chamber and a removable type ladder shall be attached to plenum.

4.02.06 **Construction for AHU**

a)	Fan Type	:	Double Width Double Inlet (DWDI) Centrifugal Type
b)	Fan impeller	:	Backward curved blades
c)	Casing material	:	GI /Mild steel with minimum thickness of 3 mm.
d)	Impeller material	:	Carbon steel
e)	Shaft	:	EN 8 Steel

	f)	Fan bearings	: Self aligning type, permanently lubricated, heavy duty with a design life of 10,000 operating hours.
	g)	Critical speed	: First critical speed of rotating assembly shall be at least 25% above the operating speed.
	h)	Drive	: Motor driven with removable belt guard. Motor driven with removable belt guard. Motor rating (at 50 deg.C ambient) shall be atleast fifteen percent (15%) above the maximum load demand of drives at the design duty point.
	i)	Fans	: For AHUs of capacity 50,000 CMH and above, Bidder may offer two (2) Nos. centrifugal fans of equal capacity for each AHU provided all such AHUs are accommodated within the space identified by the Employer.

4.02.07 **M□□□□ B□□:**

Mixing box shall be complete with fresh and return air dampers. Mixing box shall be provided whenever the return air is ducted back to the AHU. Further, wherever return air is led back directly to AHU room, no mixing box is required.

4.02.08 **P□□ H□□ □d□□□r:**

Pan humidifier shall be made of 22 gauge SS 304 tank, duly insulated with 25 mm thick resin bonded fiber glass insulation (min. 24 Kg/m3 density) with 0.5 mm GSS cladding. The humidifier shall be complete with stainless steel immersion heaters, safety thermostat, float valve with stainless steel ball, sight glass, overflow and drain connections, steam outlet nozzle and float switch. Step controller shall be provided for switching on / off heater banks as per system requirement.

4.0□.00 HI-WALL SPLIT□CASSETTE AIR-CONDITIONERS

4.03.01 Hi-wall Split/cassette air conditioners shall in general consist of the following:

i) Casing

ii) Hermetically sealed rotary/scroll Compressor

iii) Condenser and condenser cooling fan

iv) Evaporator along with fan

v) Cooling coil

vi) Filters

vii) Piping, valves, refrigerant strainer, etc.

viii) Controls, instruments, control panel/starter panels.

ix) Vibration isolator pads, etc as required.

x) Refrigerant as per manufacturer practice.

4.03.02 Indoor unit of Ceiling Mounted Cassette Type Unit (Multi Flow Type):

The housing of the unit shall be powder coated galvanized steel. All the indoor units regardless of their difference in capacity should have same decorative panel size for harmonious aesthetic point of view.

Unit shall have four way supply air grills on sides and return air grill in center.

Each unit shall have high lift drain pump and very low operating sound.

4.04.00 **SPLIT□PACKAGED AIR CONDITIONERS**

4.04.01 Split/packaged air conditioners shall in general consist of following:

I. Casing
II. Compressor
III. Condenser
IV. Evaporator and condenser cooling fan
V. Cooling Coil
VI. Filters
VII. Piping, Valves, refrigerant strainer etc.
VIII. Control, instruments, control panel/starter panels.
IX. Vibration isolator pads, ducting (if applicable) etc as required.

□.00.00 EQUIPMENT DESCRIPTION - □ENTILATION SYSTEM

□.01.00 U□□□r□ A□r F□□r□□□□

5.01.01 Each modular unitary air filtration shall consist of Casing, Tanks, Fans, Distribution plates, Moisture eliminator and water repellant type nylon filter with frame and support, Header and standpipe with support, Spray and flooding type nozzle. Screen type suction strainer, Pumps, Necessary controls & Instrumentation, and all other required accessories.

5.01.02 The housing/ casing of air washer unit shall be double skin construction. Double skin panels shall be made of 22G galvanized sheet on outer side and 20G galvanized sheet inside with 25mm thick polyurethane foam insulation of minimum 38 kg/cub. Mtr. Density in between. Frame work for section shall be joined together with soft

	rubber gasket in between to make the joints air tight. The entire fan section shall be mounted on rolled formed GSS channel frame work.
5.01.03	The unitary air filtration tank shall be fabricated from MS plate of minimum 6 mm thick and inside and outside surface of the tank shall be spray galvanized **(□ □□□ □□ □0 □ □□r□□□ DFT).** Minimum depth of the tank shall be 600 mm. Tank construction shall be such that the suction screen can be replaced while the unit is operating. Tank shall be provided with overflow, drain with valve, float valve makeup connection with a gate valve backup, quick fill connection with globe valve etc. The overflow pipe shall be connected to drain pipe after isolating valve on drain pipe.
5.01.04	The distribution plate shall be fabricated out of 18G galvanized steel sheets & galvanized steel angle supports with minimum 50% free area.
5.01.05	Unitary air filtration shall be one-bank construction. All header and stand pipes shall be galvanised. Cat walks of suitable width shall be provided for maintenance of nozzle, filter etc.
5.01.06	The spray nozzles shall be of brass or bronze with chrome plating and shall be self cleaning type. The nozzle shall be designed to produce fine atomised spray and shall be properly spaced to give a uniform coverage of the air washer section. The pressure drop through the nozzle should be in the range of 1.4 to 2.4 Kg/cm2.
5.01.07	The eliminator plates shall be of 24G thick GS sheets class 275 or from 100% virgin PVC of minimum finished thickness of 2 mm. The eliminator section made of GSS shall have minimum six bends. The PVC eliminators shall be UV stabilised using Titanium di-oxide and shall withstand the weathering test as per IS:4892 for 500 hrs. Type test report of the compound testing carried out in any reputed laboratory shall be submitted for approval. All supports, tie rods and space bar shall be of either galvanised steel or PVC construction and shall be complete with suitable drip tray and drain pipe.
5.01.08	Air tight inspection doors of suitable size shall be provided for suction chamber. Spray chamber and fan suction for easy accessibility and maintenance and a water marine light be provided for each unitary air filtration.
5.01.09	Suitable number of brass screen shall be provided in the air washer tank to arrest the dirt entering the circulating water pump suction. Suitable GI grid shall be used inside the screen for reinforcement.
5.01.10	The specification for centrifugal fans shall generally be as indicated below. However, the fan shall be of DIDW type for UAF unit.
5.01.11	Saturation efficiency of Unitary Air Filtration units shall be minimum 60%.
□.02.00	**C□□r□□□□□F□□**
5.02.01	The casing shall be of welded construction fabricated with heavy gauge galvanised sheet steel or MS sheet with spray galvanization (□ □□□ □□ 60 micron DFT). The minimum thickness of casing shall be 3 mm. It shall be rigidly reinforced and supported by structural angles. The seams shall be permanently sealed air-tight. Split casings shall be provided on larger sizes of fans. Casing drain with valves shall be provided wherever required. The impeller shall have die-formed backward-curved blades tie welded to the rim and back plate to have a non overloading characteristic of the fan. Rim shall be spun to have a smooth contour. If required intermediate stiffening rings shall be

	provided. Shaft sleeves shall be furnished wherever required. The impeller, pulley and shaft sleeves shall be secured to the shaft by key and/or nuts.
5.02.02	The bearing shall be self aligning, heavy duly ball, roller or sleeve bearing. They shall be adequately supported. They shall be easily accessible and lubricated properly from outside.
5.02.03	Inlet guard shall be spun to have a smooth contour. Inlet screen, if provided, shall be of galvanised wire mesh of 25 mm square.
5.02.04	Base plate with necessary number of spring type vibration isolators or ribbed neoprene rubber pad or cushy foot mounting shall be provided. The vibration isolators should have a minimum of 70% efficiency.
5.02.05	The first critical speed of the rotating assembly shall be at least 25% above the opening speed.
5.02.06	The fans shall be provided with V-belts and sheaves. All belts shall be sized for 150% rated HP. All V-belt shall be equipped with removable belt guards that do not impede the air flow to the fan inlet. There shall be a minimum of two belts per drive. Motor rating (at 50 deg.C ambient) shall be atleast fifteen percent (15%) above the maximum load demand of drives at the design duty point.
□.0□.0	**R□□□□□□□□□□r□ (I□□□□□□□□□□)**
5.03.01	The roof extractors shall be “COWL” type.
5.03.02	Impeller shall be of axial flow type, cast Aluminium in one piece and dynamically balanced. Casing shall be heavy gauge sheet steel construction of 3 mm thick for impeller upto 750 mm diameter and 5 mm for fans with impeller of diameter 750 and above. In casing, access door with locking arrangement be provided.
5.03.03	The cowl shall be designed for weather protection of the fan also inside of the roof on which the extractor is installed. Galvanised bird screen of 15 mm Square be provided with the cowl. All accessories, steel supports as required will be provided.
5.03.04	The speed of the fan be limited as per limitation given above for axial fans.
5.03.05	All accessories rain protection exhaust hood, transformation piece, vibration isolators, steel supports vibration isolators, bird screen, etc. as required shall be provided.
5.03.06	The vibration level for fans shall be as per ISO: 14694.
□.04.00	**C□□r□□□□P□□ □□**
	a) Type : Horizontal Centrifugal, Axially or radial split type casing pump or end suction, top discharge horizontal centrifugal pump
	b) Impeller : Closed type
	c) Material of Construction
	i) Casing : 2% Ni Cast Iron : IS:210 Gr. FG-260

	ii) Impeller	:	Bronze IS:318 Gr-2
	iii) Wearing rings	:	Bronze
	iv) Shaft	:	SS 316
	v) Shaft sleeve	:	SS 316
	vi) Lantern ring	:	Brass / Bronze
	vii) Packing	:	Asbestos free
	viii) Base Plate	:	Carbon steel as per IS:2062
	ix) Speed	:	Maximum 1500 rpm
	x) Other requirements	:	To refer to **A□□□□□r□-I** titled "Horizontal Pumps" of this sub section.

□.0□.0	**A□□□□F□□□**
5.05.01	These fans shall have fixed / variable pitch cast aluminum blades of aerofoil design.
5.05.02	The fan casing shall be of heavy gauge sheet steel construction.
5.05.03	Necessary rain protection cowl, inlet and outlet cones, bird protection screen, adjustable damper, vibration isolators, back draft dampers etc. shall be provided.
5.05.04	The speed of the fan shall not exceed 960 rpm for fan with impeller diameter above 450 mm and 1400 rpm for fan with impeller diameter 450 mm or less. However for fans having static pressure of 30 mm WC or above the speed of the fan shall not exceed 1440 rpm for fan with impeller diameter of above 450 mm and 2800 rpm for fan with impeller diameter of 450 mm or less. The first critical speed of rotating assembly shall be atleast 25% above the operating speed.
5.05.05	All other accessories like supporting structure etc. as required shall be provided.
5.05.06	Fans of capacity 1000 m^3/hr & lower shall be of propeller exhaust type.
□.00.00	**BALANCE EQUIPMENT SPECIFICATION**
6.01.00	**M□□□r□□□□□C□□□□r□□□□□□ □□r P□□□□□ □ F□□□□□□□**

a)	Piping for Chilled and Condenser water lines	:	Heavy grade-IS:1239 or Equivalent upto150 NB and IS:3589 or Equivalent for pipes beyond 200 NB with thickness as indicated in **A□□□□□r□-II**
b)	Refrigerant piping :	:	Seamless steel tubes conforming heavy grade IS:1239 or copper tubes as per IS:2501 (copper material as per IS:191 hard copper grade).
c)	Drain piping	:	Same as (a) above & galvanized as per IS:4736.

d) Fittings :

1) The steel fittings shall conform to ASTM A234 Gr. WPB and dimensional standard to ANSI B 16.9/ANSI B16.11 / equivalent for sizes 65 NB and above.

2) For sizes 50 NB and below, the material shall conform to ASTM A-105.

3) All steel flanges shall be of slip on type and shall conform to ANSI B 16.5

4) For pipe sizes above 350 NB, fabricated fittings from sheets of adequate thickness may be used. The bend radius in case of mitre bends shall be minimum 1.5 times the nominal pipe diameter and angle between two adjacent sections shall not be more than 22.5 deg and shall be as per BS:2633/BS:534.

5) Fittings, flanges and pipe joints of refrigerant piping shall conform to ANSI B31.5

6.02.00 **□AL□ES**

6.02.01 Valves shall have full sizes port and suitable for horizontal and as well as vertical installation.

6.02.02 Valves for regulating duty shall be of globe type suitable for controlling throughout its lift.

6.02.03 All safety /relief valves shall be so constructed that the failure of any part does not obstruct the free discharge.

6.02.04 Valves shall be furnished with back seating arrangement for repacking while working under full working pressure.

6.02.05 Manual gear operators be provided for valves of size 200 NB and above.

6.02.06 All valves shall be supplied with companion flanges, nut, bolts & washers, etc.

6.02.07 The refrigerant line valves shall have steel or brass body with TEFLON gland packing. The construction of disc shall be either globe or angle type. The valve seat shall have white metal lining or equivalent.

6.02.08 Gate valves shall be of Cast Iron body (confirming to IS:210 Gr FG 220/equivalent) for sizes 65 NB and above conforming to fIS :14846. Gun Metal construction for sizes less than 65NB shall be as per IS:778. Butterfly valves shall conform to latest revision of BS:5155 or equivalent standard of required class/rating.

6.03.00 **AIR FILTERS**

6.03.01 **Pr□ F□□□r**

1) Type : Flange / Cassette

2) Pre-filter shall contain washable non-woven synthetic fiber or High density Polyethylene (HDPE) media having 18G GSS / 16G Al alloy frame. The filter media shall be supported with HDPE mesh on air inlet side & Aluminium expanded metal on exit side or G.I. wire mesh on both sides.

3) **O□□r r□□□r□□ □□□ : (□□ □□□□□□□)**

   a) Suitable aluminium spacers be provided for uniform air flow;

   b) Casing shall be provided with neoprene sponge rubber sealing.

   c) Capable of being cleaned by water flushing.

   d) Density of filter medium shall increase in the direction of air flow in case of metallic filter.

   e) Filter media shall be fire retardant and resistant to moisture, fungi, bacteria & frost.

4) **E□□□□□□□ :**

   Average arrestance of 65 - 80 % when tested in accordance with BS:6540/ASHRAE – 52 – 76 / EN-779.

5) Minimum thickness : 50 mm

6) Face Velocity : Not more than 2.5 m/sec.

7) Pressure drop : Initial pressure drop - Not to exceed 5.0 mm WC at rated flow.

   Final pressure drop - Upto 7.5 mm WC.

8) Location : a) At the suction of each AHUs

   : b) At the suction of each Fresh air fan

6.03.02 **F□□ F□□□r□ (M□r□□□ □□□)**

1) Type : Flange / Cassette

2) Fine filter shall contain washable non-woven synthetic fibre or High density Polyethylene (HDPE) media having 18G GSS / 16G Al alloy frame. The filter media shall be supported with HDPE mesh on air inlet side & Aluminium expanded metal on exit side or G.I. wire mesh on both sides.

	3)	Other requirements	:	a) A neoprene sponge rubber sealing shall be provided on either face of the filter frame. b) Capable of being cleaned by air or water flushing. c) Filter media shall be fire retardant and resistant to moisture, fungi, bacteria & frost.
	4)	Efficiency	:	Average arrestance > 90% when tested in accordance with BS:6540/ASHRAE–52-76 / EN-779.
	5)	Minimum thickness	:	150 mm or 300 mm.
	6)	Face Velocity	:	Not more than 1.2 m/sec for 150 mm and not more than 2.4 m/sec. for 300 mm.
	7)	Pressure drop	:	Initial pressure drop - Not to exceed 10 mm WC at rated flow ; Final pressure drop-Up to 25 mm WC.
	8)	Location	:	i) At the discharge of each individual AHU. ii) At the discharge of each Fresh air fan.

6.04.00 **LOW PRESSURE AIR DISTRIBUTION SYSTEM**

6.04.01 Material of air distribution system shall be through galvanized steel sheet (Conforming to Class 275 of IS :277) or Aluminium alloy (grade 19000 / SIC or 3100 / NS3 of IS:737). GI Sheets should be galvanized and galvanizing shall be of 275 gms/sq.m. (total coating on both sides) both for site fabricated and factory fabricated ducts.

6.04.02 **T□□□□□□□ □□r□□□□□□□r d□□□ □□□□□□ □□ □□□□□ □:**

Larger Dimension of duct (mm)	Thickness of GI sheet(mm)	Thickness of Aluminium sheet (mm)
up to 750 mm	0.63 (24 G)	0.80
751 to 1500	0.80 (22 G)	1.00
1501 to 2250	1.00 (20 G)	1.50
2251 & above	1.25 (18 G)	1.80

6.04.03 **T□□□□□□□ □□r□□□d d□□□ □□□□□□ □□ □□□□□ □:**

Diameter of Round duct (mm)	Thickness of GI sheet(mm)	Thickness of Aluminium sheet (mm)
150 to 500	0.63	0.80
501 to 750	0.80	1.00

	751 to 1000	0.80	1.00
	1001 to 1250	1.00	1.50
	1251 & above	1.25	1.80

6.04.04 **D□□□F□□r□□□□□□ □□d S□□□□r□□:**

a) Duct fabrication shall be as per the latest relevant BIS/SMACNA standard.

b) Ducts for A/C system may be □□□□ □□□r□□□□□d □r □□□□□r□ □□□r□□□□d.

c) The ducts routed inside the buildings with larger side greater than 2250 mm shall be supported by 16mm MS rods and 50x50x3 mm MS double Angles while those below 2250 mm shall be supported by 10mm MS Rods and 40x40x3 MS angles. The duct supports shall be at a distance of not more than 2000 mm for A/C system. The MS rods for these ducts routed inside the building shall be hung from the existing floor beams/wall beams/roof beams/columns with provision of necessary auxiliary or special steel members or by hooks or can be provided by dash fasteners fixed to the ceiling slab. No supports shall be taken from horizontal/vertical bracings of the structures. All items of duct support including MS rods, MS angles and double angles, auxiliary or special steel members, hooks, dash fasteners coach screws and all other supporting material required shall be provided by the bidder. Where ever ducts are running outside the building and or at locations where it is not possible to support the ducts from ceiling/floor due to non-availability of the same, the base steel frame/truss work and other auxiliary steel members, hooks, rods, etc. for supporting the duct work shall also be provided by the Bidder.

d) Where the sheet metal duct connects to the intake or discharge of fan units a flexible connection of fire retarding, at least 150 mm width shall be provided of closely woven, rubber impregnated double layer asbestos/canvas or neoprene coated fibre glass.

e) All curves, bends, off-sets and other transformations shall be made for easy and noiseless flow of air. The throat of every branch duct shall be sized to have the same velocity as in the main duct to which the branch duct is connected.

f) Wherever duct passes through a wall, the opening between masonry and duct work shall be neatly caulked or sealed to prevent movement of air from one space to the adjoining space.

g) Wherever pipe hangers or rods pass through the ducts, light and streamline easement around the same shall be provided to maintain smooth flow of air.

h) Access doors shall be provided in the duct work or casing on the both sides of the equipment to be serviced. All access doors shall be of adequate size and shall be lined with substantial felt edging to prevent air leakage. Access doors shall be of built up construction, structurally strong and each shall

have at least two hinges. Access doors shall have two rust proof window sash of approved type. All doors shall be set so as to flush with insulation or plaster finish on the duct.

6.04.05 Splitters and dampers shall be provided for equipment/area isolation and for proportional volume control of system. The same shall be minimum 16 gauge GS sheet of quadrant type with suitable locking device, mounted outside of duct in accessible position.

6.04.06 **F□□□□r□ □□□r□□□□□d d□□□□ :**

i) All ducting shall be fabricated of LFQ (Lock Forming Quality) grade prime G.I.

ii) Unless otherwise specified here, the construction, erection, testing and performance of the ducting system shall conform to the SMACNA-1995 standards ("HVAC Duct Construction Standards-Metal and Flexible-Second Edition-1995" SMACNA)

□□) All ductwork including straight sections, tapers, elbows, branches, show pieces, collars, terminal boxes and other transformation pieces must be factory fabricated by utilizing the machines and processes as specified in SMACNA or by equivalent technology. In equivalent method, the fabrication shall be done by utilizing the following machines and process to provide the requisite quality of ducts and speed of supply:

a) Coil lines to ensure location of longitudinal seams at corners/folded edges only to obtain the required duct rigidity and low leakage characteristics. No longitudinal seams permitted along any face side of the duct.

b) All ducts, transformation pieces and fittings to be made on CNC profile cutters for required accuracy of dimensions, location and dimensions of notches at the folding lines.

c) All edges to be machine treated using lock formers, flangers and roll-bending for turning up edges.

d) Sealant dispensing equipment should be used for applying built-in sealant in Pittsburgh lock where sealing of longitudinal joints are specified. Sealing of longitudinal joint is compulsory for the ducts over 2" w.g. static pressure

iv) All transverse connectors shall be 4-bolt slip-on flange system with built-in sealant, if any. To avoid any leakage additional sealant shall be used.

v) Factory fabricated ducts shall have the thickness of the sheet as follows:

Sl.No.	**S□□□ □□D□□□**	**S□□□□T□□□□□□□**
i)	upto 750 mm	0.63 mm
ii)	751 mm to 1500 mm	0.80 mm
iii)	1501 mm to 2250 mm	1.00 mm
iv)	2251 mm and above	1.25 mm

□.0□.00	**D□□□□□r□□Gr□□□ □ D□□ □□r□ :**
6.05.01	Supply air diffusers/grills with factory fitted volume control dampers be provided for all air-conditioned areas.
6.05.02	Return air diffusers of air-conditioned areas shall be without volume control dampers.
6.05.03	The diffusers/grills shall be of extruded Aluminum of minimum 1.2 mm thick with powder coating. The colour of power coating shall be as per the interior décor.
6.05.04	Supply air grills shall be of double deflection type and return air grills shall be of single deflection type.
6.05.05	All volume control (VC) damper shall be operated by a key from the front of the grills/diffusers and shall be of GI sheet.
6.05.06	The thickness of VC dampers shall be of minimum 20 gauge and thickness of louvers shall be of minimum 22 gauge.
6.05.07	Suitable vanes shall be provided in the duct collar to have uniform and proper air distribution. Bank of Baffles wherever required shall also be provided.
6.05.08	Fire dampers shall be motor operated type and shall have fire rating of minimum 90 minutes.
6.05.09	All plenum chambers of connections to fans, dampers etc shall be constructed in 18 gauge GS sheet and supported on MS angle frames.
6.05.10	All ducting surfaces coming in contact with corrosive fumes or gases shall be painted with three coats of epoxy paint over a coat of suitable primer.
□.0□.0	**T□□r□ □□□□d A□□□□□□□l□□□□□□□□**
□.0□.01	**A) <u>A□□□□□□□□ □ □□□ G□□□□ W□□□□R□□□□ □□□</u>**
	(i) All surfaces to be insulated both thermally and acoustically shall be thoroughly cleaned, dried and an adhesive (CPRX compound of Shalimar Tar Products / Loid bond 83 or Equivalent) be applied @ 1.5 Kg /Sqm on the surface.
	(ii) Insulation material (either expanded polystyrene foam or Glass Wool/ Glass fiber / Rockwool) shall be struck to the surface. All the joints shall be sealed with bitumen.
	(iii) Insulation mass to be covered with 500 gauge polythene sheet with 50 mm overlaps and sealing all joints on hot side or alternatively aluminum foil can be used which can come as lamination over insulation.
	(iv) Insulation Finish of types specified under shall be provided thereafter..
	B) <u>A□□□□□□□□ □ □□□ N□r□□□ R□□□□r</u>
	(i) All surfaces to be insulated shall be properly cleaned.
	(ii) A suitable adhesive such as SR 998 or equivalent shall be applied over the surfaces to be insulated and insulation material surfaces.

(iii) Insulating material shall than be pasted onto the surfaces in a manner to avoid stretching and any air entrapment within.

(iv) Two layers of Glass Cloth with a suitable adhesive as SR 998 or equivalent shall be then applied over the insulating material to avoid surface weathering.

C) A□□□□□□□□□ □ □□□ P□□□□r□□□□□ F□□□ □ P□□□□□□□□□□r□□□ F□□□

i) All surfaces to be insulated shall be cleaned.

ii) A suitable adhesive such as CPRX or Loid Bond 83 or equivalent shall be applied over the surface to be insulated and insulation material surfaces.

iii) Insulating material with aluminum foil lamination shall then be pasted onto the surface in a manner to avoid stretching and any air entrapment within.

iv) Two layers of Glass Cloth with a suitable adhesive as Loid Bond 130 shall be then applied over the insulating material, to avoid surface weathering.

v) Insulation Finish of types specified under shall be provided thereafter.

□.0□.02 T□□□ □□I□□□□□□□□ □ F□□□□

S□. N□.	S□r□□□□	I□□□□□□□□ M□□□r□□□	I□□□□□□□□ F□r□	T□□□□ (□ □)	F□□□□ (□ □)
1.	Supply & return air duct of AC System	Resin bonded glass wool or	Roll /Slab	50	F-3
		Closed Cell Elastomeric Nitrile Rubber	sheet	19	As per manufacturer std.
		or Polyisocyanurate Foam	Slab	30	F-3
2.	Refrigerant (Suction and liquid lines)	Closed Cell Elastomeric Nitrile Rubber	tube	19	As per manufacturer std.
		or Rigid Polyurethane Foam	Pipe Section	50	F-1 (a)
3.	AHU drain pipe	Closed Cell Elastomeric Nitrile Rubber	tube	19	As per manufacturer std.

S□. N□.	S□r□□□□	I□□□□□□□□□ M□□□r□□□	I□□□□□□□□□ F□r□	T□□□□ (□ □)	F□□□□□ (□ □)
		or Rigid Polyurethane Foam	Pipe Section	50	F-1 (a)
4.	AHU condensate pan (insulation if required)	Mineral wool or resin bonded glass wool	Slab	25	As per manufacturer std.
5.	Chilled water piping, valves & specialties	Resin bonded Mineral wool or resin bonded glass wool	Pipe section	75	F-1/F-3
		or Rigid Polyurethane Foam	Pipe Section	50	F-3
6.	Chiller (insulation if required)	---------- As per manufacturer std.----------			
7.	Chilled water pumps	Resin bonded Rockwool wool or resin bonded glass wool	Slab	75	F-1/ F-3
		or Rigid Polyurethane Foam	Slab	50	F-3
8.	Expansion tank with associated piping	Resin bonded Rockwool wool or resin bonded glass wool	Slab/ Pipe section	75	F-1/ F-3
		or Rigid Polyurethane Foam	Slab	50	F-3
9.	Acoustic insulation of	Resin bonded	Slab	25	As per

S□. N□.	S□r□□□□	I□□□□□□□□□ M□□□r□□□	I□□□□□□□□□ F□r□	T□□□□ (□ □)	F□□□□□ (□ □)
	duct	Glass wool			specifications
10.	Exposed air duct	Resin bonded Glass wool/Rockwool	Roll/Slab	50	F-4
		or Polyisocyanurate Foam	Slab	50	F-4(a)

6.06.03 **S□□□□□□□□□□□□ □□r □□□□□□□□□ □□□□□□ □□ □□□□ □: -**

I□□□□□□□□ M□□□r□□□	C□d□	T□□r□ □□ □□d□□□□□□□ (□ □□ □C	D□□□□□ K□□ □
Resin bonded glass wool	IS:8183	0.049 at 50°C 0.043 at 50°C	i) 24 (For Glass wool) ii) 48 (For Rockwool) iii) 48(For acoustic insulation)
Mineral wool pipe section. Min.Gr.2	IS:9842	0.043 at 50°C	144
Closed Cell Elastomeric Nitrile Rubber		0.036 at 20°C	40 – 60
Polyurethane Foam Polyisocyanurate Foam	IS12436	0.03 at 50 °C 0.03 at 50 °C	34 ± 2 34 ± 2
Note : Insulation used for HVAC application shall be CFC/HCFC free			

6.06.04 **T□□ □□□□□□□□□□□□□□ □□r □□r□□□□ □□□□□□□□ □□□□□□□□ □□ □□□□□□ □**

a)	**F□□□□□ F-1 (□ □□□ R□□□□ B□□d□d G□□□□ W□□□R□□□□ B□□d□d M□□r□□W□□□)**
	Step-1 Wrapping of Poly-Bonded Hessain (PBH – to act as vapour seal) on outer surface of insulation with 50 mm overlap stitching and sealing of overlap with synthetic adhesive like CPRX or Equivalent compound.
	Step-2 The surface then shall be wrapped with 19 mm mesh 24 SWG GI wire netting, butting all the joints and laced down with 22 SWG lacing wire.
	Step-3 Sand cement (4:1) plaster shall be applied in two layers totalling to 12.5 mm thick, the second layer being brought to a smooth finish. A water proofing compound shall be added to the cement before its application.
aa)	**F□□□□□ F-1(□) (W□□ P□□□□r□□□□□ F□□□ □ P□□□□□□□□□□r□□ F□□□)**
	Wrapping of two layers of 7 mil 10 x 10 mesh glass cloth dipped in suitable adhesive such as SR 998 or Loid Bond 130 equivalent
b)	**F□□□□□ F-2**
	Step-1 Insulation shall be covered with 500g polythene with 50mm overlap and sealing of overlap with synthetic adhesive like CPRX/ Loid Bond 83 or Equivalent compound.
	Step-2 Same as Step-2 of Finish F-1 above.
	Step-3 Same as Step-3 of Finish F-1 above.
c)	**F□□□□□ F-□**
	Step-1 Same as Step-1 of Finish F-2 above
	Step-2 The polythene shall be covered with 26 gauge Aluminium sheet and locking of joints with self-locking screws at a pitch of minimum 100 mm.
d)	**F□□□□□ F-4**
	Step-1 Same as Step-1 of Finish F-1 above.
	Step-2 Same as Step-2 of Finish F-1 above.
	Step-3 Same as Step-3 of Finish F-1 above.
	Step-4 Application of 3 mm thick coat of suitable water proofing compound and wrapped with fibre glass RP tissue followed by final coat of 3 mm thick water proofing compound over the RP tissue.

	Step-5 After the above treatment, 22G Aluminium sheet cladding, properly stiched at all joints shall be provided over the external surface.
dd)	**F□□□□□ F-4(□) (W□□□ FR C□□□□d C□□□ C□□□ □□□□□□ Cr□□□ L□□□□d P□□□□□□□□□□□□)**
	Application of aluminium sheet 22G cladding to be provided over the XLPE insulating material. Cladding sheet is held in position with SDST screws @ 150 mm C/c over tongue-in-groove joints applied with a felt for sealing joint against water ingress.
	All sheet joints to be done in a manner to shed water.

6.06.05 For all inspection covers and hatches on equipment, pump casing, valve bodies and flanges (100 mm and above), insulation shall be applied so as to facilitate removal without minimum damage to the insulation by encasing the insulation in 24 gauge GI box or 22 gauge Aluminium sheet metal boxes which are bolted together around the equipment. However continuity of the vapour seal between the static and removable portions of the insulation is to be maintained.

6.06.06 **ACOUSTIC INSULATION**

a) All ducts up to a distance of 5 meters from AHU shall be acoustically lined from inside with 25 mm thick resin bonded glass wool of 48 Kg/Cu.M. density and 30 gauge perforated aluminium sheet having 5 mm dia perforation at 8 to 10 mm centre-to-centre distance. Insulation shall be fixed on wooden frame of 600 x 600 mm dimension.

b) Fibre glass tissue sheet shall be applied over the outer surface of insulation before applying perforated aluminium sheet. Application of acoustic insulation shall be inline with the requirements specified above.

□.00.00 PLANT CONTROL

7.01.00 Brief scheme of controlling the operation is described below. Detailed description of the control system for safe and efficient operation of the plant shall be elaborated, got approved from employer. The descriptions in the sub-sections of the control & instrument sections shall also be referred to.

7.02.00 **C□□□r□□S□□□□ □ □□r A□r-C□□d□□□□□□□ S□□□□□**

7.02.01 Contractor shall provide microprocessor/PLC/GIU based control system for control and monitoring of air conditioning and ventilation system as per manufacturer's standard practice. Control and monitoring of air conditioning and ventilation system from FGD control system is also acceptable.

7.03.00	**A□r H□□d□□□□ U□□□**
	a) Humidity sensor and gyserstat located in the return air duct shall actuate the PAN humidifier to obtain the desired degree of humidification.
	b) Humidity and temp. sensor shall be provided and interlocked in steps with winter heater / re-heater / strip heaters for monsoon and winter re-heating or heating as the case may be.
	c) Heater banks shall be interlocked with the running of AHU, temperature of return air, humidity of return air and safety thermostat (airstat - located in front of the each heater in the supply air duct)
	d) AHU shall be started either locally or from the main control room of AC system by means of Remote / Manual selection facility.
	e) The closure of fire dampers, automatic tripping of AHU fans and fresh air fans shall be interlocked with Fire Detection System.
7.05.00	**C□□□□□□□ □H□-□ □□□S□□□□A□r C□□d□□□□□□r□**
	Control and interlocks for these type of units shall be as per manufacturer's standard practice.
7.06.00	**M□□□□□□□□□□□□ C□□□r□□R□□□□r□□ □□□□**
	a) The fans (both supply and exhaust fans) associated with mechanical ventilation system shall be operated locally.
	e) Relative humidity and temperature measurement of all control rooms and all major air-conditioned areas shall made be available in FGD control system
□.00.00	**PAINTING:**
8.01.00	All the Equipments shall be protected against external corrosion by providing suitable painting.
8.02.00	The surfaces of stainless steel, Galvanized steel, Gunmetal, brass, bronze and non-metallic components shall not be applied with any painting. The Contractor shall clean the external surfaces and internal surfaces before Erection by wire brushing and air blowing. The steel surface to be applied with painting shall be thoroughly cleaned before applying painting by brushing, shot blasting, etc. as per the agreed procedure.
8.03.00	For all the steel surfaces (external) exposed to atmosphere (outdoor installation), one(1) coat of red oxide primer of thickness 30 to 35 microns followed up with three (3) coats of synthetic enamel paint, with 25 microns as thickness of each coat, shall be applied.
8.04.00	For all the steel surfaces inside the building (indoor installation), One (1) Coat of red oxide primer of thickness 30 to 35 microns followed up with two (2) coats synthetic enamel paint, with 25 microns as thickness of each coat shall be applied.
8.05.00	For centrifugal fans - Casing shall have hot dip/ spray galvanization (□ □□□□ □□ 60 micron DFT).

8.06.00	However, for all parts coming in contact with acid fumes (in Battery rooms), a coat of epoxy resin based zinc phosphate primer of minimum thickness 30 to 35 microns followed up with undercoat of epoxy resin based paint pigmented with Titanium dioxide of minimum thickness of 25 microns shall be applied and a top coat consisting of one coat of epoxy paint of approved shade and colour with glossy finish of minimum thickness of 25 microns.
□.00.00	**CODES □ STANDARDS**
9.01.00	The design, manufacture and performance of equipment shall comply with all currently applicable statues, regulations and safety codes in the locality where the equipments are to be installed. Nothing in this specification shall be considered to relieve the bidder of this responsibility.
9.02.00	Unless otherwise specified, equipment shall conform to the latest applicable Indian or IEC standard. Equipment complying with other authoritative standards such as British, USA, ASHRAE etc. will also be considered if it ensures performance equivalent or superior to Indian Standard.

A□□□□□r□ □l

GENERAL SPECIFICATION FOR HORI□ONTAL PUMPS

1) **SCOPE**

This specification covers the design, material, construction features, manufacture, inspection, testing the performance at the Vendor's/Sub-Vendor's Works and delivery to site of Horizontal Centrifugal Pumps.

2) **CODES AND STANDARDS**

The design, material, construction, manufacture inspection and performance testing of Horizontal Centrifugal Pumps shall comply with all currently applicable statutes, regulations and safety codes in the locality where the Equipment will be installed. Nothing in these specifications shall be construed to relieve the Vendor of this responsibility. The Equipment supplied shall comply with the latest applicable Indian Standards listed below. Other National Standards are acceptable, if they are established to be equal or superior to the Indian Standards.

3) List of Applicable Standards.

IS : 1520 : Horizontal Centrifugal Pumps for clear cold fresh water

IS : 5120 : Technical requirements of roto dynamic special purpose pumps

API : 610 : Centrifugal pumps for general refinery service.

IS : 5639 : Pumps Handling Chemicals & corrosion liquids

IS : 5659 : Pumps for process water

HIS : Hydraulic Institute Standards, USA

ASTM-1-165-65 Standards Methods for Liquid Penetration Inspection.

In case of any contradiction with aforesaid standards and the stipulations as per the technical specifications as specified hereinafter the stipulations of the technical specifications shall prevail.

4) **DESIGN REQUIREMENTS**

a) The Pump shall be capable of developing the required total head at rated capacity for continuous operation. Also the pumps shall be capable of being operated to give satisfactory performance at any point on the HQ characteristics curve. The operating range of the pump shall be 40% to 120% of the duty point unless otherwise mentioned elsewhere. The maximum efficiency of pump shall preferably be within ± 10% of the rated design flow as indicated in data sheets.

b) The total head capacity curve shall be continuously rising from the operating point towards shut-off without any zone of instability and with a minimum shut-off head of about 15% more than the design head.

c) Pumps of a particular category shall be identical and shall be suitable for parallel operation with equal load division. The head Vs capacity and BHP Vs capacity characteristics should match to ensure even load sharing and trouble free operation throughout the range. Components of identical pumps shall be interchangeable.

d) Pumps shall run smoothly without undue noise and vibration. Peak to peak vibration limits shall be restricted to the following values during operation:

Speed	Antifriction Bearing	Sleeve Bearing
1500 rpm and below	75.0 micron	75.0 micron
3000 rpm	50.0 micron	65.0 micron

The noise level shall not exceed 85 dBA overall sound pressure level reference 0.0002 microbar (the standard pressure reference for air sound measurement) at a distance of 1 M from the equipment surface.

e) The pumps shall be capable of starting with discharge valve fully open and close condition. Motors shall be selected to suit to the above requirements. Continuous Motor rating (at 50 deg.C ambient) shall be atleast ten percent (10%) above the maximum load demand of the pump in the entire operating range to take care of the system frequency variation and no case less than the maximum power requirement at any condition of the entire characteristic curve of the pump.

f) The kW rating of the drive unit shall be based on continuously driving the connected equipment for the conditions specified. However, in cases where parallel operation of the pumps are specified, the actual motor rating is to be selected by the Bidder considering overloading of the pumps in the event of tripping of operating pump(s).

g) Pumps shall be so designed that pump impellers and other accessories of the pumps are not damaged due to flow reversal.

h) The Contractor under this specification shall assume full responsibility in the operation of pump and motor as a unit.

5) **DESIGN CONSTRUCTION**

a) Design and construction of various components of the pumps shall conform to the following general specifications. For material of construction of the components, data sheets shall be referred to.

A□□□□□r□ □l

b) P□□ □ C□□□□□

Pump casing shall have axially or radially split type construction as specified. The casing shall be designed to withstand the maximum shut-off pressure developed by the pump at the pumping temperature.

Pump casing shall be provided with a vent connection and piping with fittings & valves. Casing drain as required shall be provided complete with drain valves, piping and plugs. It shall be provided with a connection for suction and discharge pressure gauge as standard feature. It shall be structurally sound to provide housing for the pump assembly and shall be designed hydraulically to minimum radial load at part load operation.

c) I□ □□□□r

Impeller shall be closed, semi-closed or open type as specified elsewhere and designed in conformance with the detailed analysis of the liquid being handled.

The impeller shall be secured to the shaft, and shall be retained against circumferential movement by keying, pinning or lock rings. On pumps with overhung shaft, impellers shall be secured to the shaft by a lockout or cap screw which tightness in the direction of normal rotation.

d) I□ □□□□r C□□□□□ W□□r□□□ R□□□□

Replaceable type wearing rings shall be provided at suitable locations of pumps. Suitable method of locking the wearing ring shall be used. Wearing rings shall be provided in pump casing and/or impeller as per manufacturer's standard practice.

e) S□□□□

The critical speed shall be well away from the operating speed and in no case less than 130% of the rated speed.

The shaft shall be ground and polished to final dimensions and shall be adequately sized to withstand all stresses from rotor weight, hydraulic loads, vibration and torques coming in during operation.

f) S□□□□S□□□□□□

Renewable type fine finished shaft sleeves shall be provided at the stuffing boxes/mechanical seals. Length of the shaft sleeves must extend beyond the outer faces of gland packing of seal end plates so as to distinguish between the leakage between shaft and shaft sleeve and that past the seals/gland.

Shaft sleeves shall be fastened to the shaft to prevent any leakage or loosening. Shaft and shaft sleeve assembly should ensure concentric rotation.

A□□□□□r□ □l

g) **B□□r□□□□**

Heavy duty bearings, adequately designed for the type of service specified in the enclosed pump data sheet and for long, trouble free operation shall be furnished.

The bearings offered shall be capable of taking both the radial and axial thrust coming into play during operation. In case, sleeve bearings are offered additional thrust bearings shall be provided. Antifriction bearings of standard type, if provided, shall be selected for a minimum life 20,000 hrs. of continuous operation at maximum axial and radial loads and rated speed.

Proper lubricating arrangement for the bearings shall be provided. The design shall be such that the bearing lubricating element does not contaminate the liquid pumped. Where there is a possibility of liquid entering the bearings suitable arrangement in the form of deflectors or any other suitable arrangement must be provided ahead of bearings assembly.

Bearings shall be easily accessible without disturbing the pump assembly. A drain plug shall be provided at the bottom of each bearings housing.

h) **S□□□□□□□ B□□□□**

Stuffing box design should permit replacement of packing without removing any part other than the gland.

Stuffing boxes of packed ring construction type shall be provided wherever specified. Packed ring stuffing boxes shall be properly lubricated and sealed as per service requirements and manufacturer's standards. If external gland sealing is required, it shall be done from the pump discharge. The Bidder shall provide the necessary piping valves, fittings etc. for the gland sealing connection.

i) **M□□□□□□□□□S□□□□**

Wherever specified in pump data sheet, mechanical seals shall be provided. Unless otherwise recommended by the tenderer, mechanical seals shall be of single type with either sliding gasket or bellows between the axially moving face and shaft sleeves or any other suitable type. The sealing faces should be highly lapped surfaces of materials known for their low frictional coefficient and resistance to corrosion against the liquid being pumped.

j) The pump supplier shall coordinate with the seal maker in establishing the seal chamber of circulation rate for maintaining a stable film at the seal face. The seal piping system shall form an integral part of the pump assembly. For the seals under vacuum service, the seal design must ensure sealing against atmospheric pressure even when the pumps are not operating. Necessary provision for seal water supply along with complete piping fittings and valves as required shall form integral part of pump supply.

k) **P□□ □ S□□□□□M□□□r S□□□□C□□□□□□**

The pump and motor shafts shall be connected with an adequately sized flexible coupling of proven design with a spacer to facilitate dismantling of the pump without disturbing the motor. Necessary coupling guards shall also be provided.

A□□□□□r□ □l

l) **B□□□ P□□□□**

A common base plate mounting both for the pump and motor shall be furnished. The base plate shall be fabricated steel and of rigid construction, suitably ribbed and reinforced. Base plate and pump supports shall be so constructed and the piping unit so mounted as to minimize misalignment caused by mechanical forces such as normal piping strain, internal differential thermal expansion and hydraulic piping thrust. Suitable drain troughs and drip lip shall be provided.

m) **A□□□□ □□□ □□d D□□□ □□□□□□□**

Assembly and dismantling of each pump with drive motor shall be possible without disturbing the grouting base plate or alignment.

n) **Dr□□□ M□□□r (Pr□□ □ M□□□r)**

The kW rating of the drive shall be based on continuously driving the connected equipment for the conditions specified. However, in cases where parallel operation of the pumps are specified, the actual motor rating is to be selected by the Bidder considering overloading of the pumps in the event of tripping of operating pump(s).

ANNEXURE-II

PIPING THICKNESS: Pipes for sizes 200 NB & above shall confirm to IS: 3589 Grade 410. The thickness as mentioned below are the minimum specified nominal thickness as per IS: 3589. Tolerance as code shall be applicable.

NOMINAL SIZE (NB)	OUTSIDE DIAMETER (MM)	WALL THICKNESS (MM)
200 NB	219.1	4.5
250 NB	273	5
300 NB	323.9	5.6
350 NB	355.6	5.6
400 NB	406.4	6.3
450 NB	457	6.3
500 NB	508	6.3
600 NB	610	6.3

SUB-SECTION-I-M4

FIRE DETECTION & PROTECTION SYSTEM

FIRE PROTECTION AND DETECTION SYSTEM

1.00.00 GENERAL DESCRIPTION

1.01.00 A comprehensive Fire Detection and Protection System covering all the areas of the power plant including Employer's facilities/ system /buildings (if applicable) is included in the scope of the Contract.

1.02.00 The complete Fire Detection and Protection Systems shall be as per the guidelines/ codes/ standards / rules of TAC/ NFPA / IS: 3034 / OISD etc. and all the systems, equipments and installation shall be got approved from TAC accredited professional(s)-India.

2.00.00 HYDRANT SYSTEM

Hydrant system shall consist of piping, hydrant valves, landing valve, water monitors, hoses, branch pipes, nozzle, hose boxes, etc.

2.01.00 **Areas to be Covered**

Complete FGD area and other auxiliary buildings / areas under the scope of the Bidder.

3.00.00 HVW AND MVW SPRAY SYSTEM

3.01.00 **General**

It shall consist of: Spray pumps, pressurization arrangements, water mains network, deluge valves, alarm valves, flow switches, isolation valves, Y-type strainers, spray nozzles/projectors, spray nozzles piping network, detection system, instrumentation, local control panels, cables etc.

3.02.00 **Areas to be covered by HVW Spray System**

i) All transformers For FGD System having oil capacity above 2000Ltrs & located with-in plant boundary.

3.03.00 **Areas to be covered under MVW Spray System**

i) All cable galleries/ cable vault/ cable spreader room in Bidder scope of work under FGD System

4.00.00 FIRE EXTINGUISHERS AND FIRE STATION EQUIPMENTS

4.01.00 **Fire Extinguishers**

As indicated in Bidder's Scope, Part-A.

5.00.00 FIRE DETECTION, ALARM AND CONTROL SYSTEM

5.01.00 **Codes and Standards**

a. The design, manufacture, testing, performance, etc. of the various components of the analog addressable Fire Detection and Alarm System shall comply with all currently applicable statutes, regulations and safety codes in the locality where the equipment will be installed. Nothing in this specification shall be construed to relieve the contractor of this responsibility.

b. Unless otherwise specified, the Fire Detection and Alarm System and the components shall conform to the latest applicable Indian or IEC Standards. Equipment complying with any other authoritative National Standards such as British, USA, VDE, etc. will also be considered, provided the parameters specified are equivalent or better than the corresponding IS.

c. The Contractor shall be solely responsible for obtaining the required approval and clearance for the different components and systems of the Fire Detection and Alarm System from the following authorities, as applicable:

i. Department of Atomic Energy (Certification of safety from Radioactivity).

ii. Central Building Research Institute, Roorkee.

iii. Central Mining Research Station, Dhanbad.

iv. Local Fire Authorities.

d. The equipment and the system shall be of types approved by any of the following bodies, as applicable:

1. Loss Prevention Council, (LPC), U.K.
2. National Fire Protection Association, (NFPA), USA
3. Under-writers laboratories, (UL), USA
4. Factory mutual(FM)

5.02.00 **Areas to be covered under Fire detection and alarm System**

a) **Multisensor type detection system (Above and below the false ceiling or below the false flooring as the case may be)**

i) All switchgear / MCC/battery rooms of FGD control room building, various auxiliary buildings (if applicable), etc.

ii) Cable galleries of FGD control room building protected by MVW spray system. Further, multisensory detectors shall also be provided inside all cubicles/panels of control room, control equipment room and UPS / Battery charger areas.

iii) Above and Below false ceiling areas of all air-conditioned rooms of FGD control room building, various control rooms of auxiliaries as defined in Sl. No. (i) above and return air ducts of inert gas protected areas.

b) **Linear heat sensing cable detection system**

Gypsum and Ilme conveyor of FGD system and Cable Galleries covered under MVW Spray System.

c) **Quartzoid bulb heat detection system**

Equipments protected by HVW spray system, conveyors protected by MVW spray system.

5.03.00 General requirements for all types of Detectors

5.03.01 Detectors shall be housed or mounted in suitable enclosure in such a way that their performance is in no way affected. Special maintenance procedures if any required for the satisfactory operation of the detectors shall be clearly stated in the bid.

5.03.02 Necessary mounting accessories shall be provided for all the detectors.

5.03.03	In case the detectors are offered with their output (on sensing a fire) in the form of an electrical contact, it shall be noted that the contact shall be 'NC' type such that under fire conditions, this contact will open to initiate the fire alarm system.
5.03.04	Detectors shall preferably be designed as plug-in units, which fit into various bases according to place and type of mounting. This would also enable interchangeability.
5.03.05	Detectors shall be provided with the necessary compression type cable terminating glands for the incoming cables of flameproof type or PVC/metallic flexible/rigid conduits.
5.03.06	Depending upon the environmental conditions in which detectors are installed, chlorinated rubber based or epoxy or equivalent paint shall be used for finishing the surface of the enclosure.
5.03.07	The coverage or the zone of protection afforded by the detector and recommended height of mounting shall be furnished by the Bidder. The bidder shall furnish the test certificate in support of this.
5.03.08	Any metal parts used for detector construction shall be inherently resistant to corrosion or shall be plated or otherwise suitably treated to afford protection against corrosion. The plating or treatment shall in no way affect the detector performance.
5.03.09	Any plastic material or any sealing compound used in the detector shall be such as it will not deform or fail under the maximum temperature to be expected.
5.03.10	No detector shall contain any moving parts subject to wear and tear and must be able to operate afresh after each alarm release, without its exchange or adjustment.
5.03.11	The detector shall be located where the largest combustion gas concentration can be expected.
5.03.12	Adequate compensation and considerations shall be made for effects for wind velocities such as air-conditioning system and exhaust fans where dilution of particles of combustion is greater.
5.03.13	The exact location of detectors shall be coordinated with other services like air-conditioning grills, light fittings, cable trays etc. to provide aesthetically pleasing appearance. The return air paths of air-conditioning shall be avoided for detector location.
5.03.14	The detectors shall not be affected by temperature, humidity; air flow or by drift failures and shall not give any false alarm due to above.
5.03.15	The detectors shall not be sensitive to vibrations. Any special mounting arrangements required to counteract vibration shall be included in the contractor scope.
5.03.16	The quantity of multi- sensor detectors in each zone shall be based on the coverage factor of 25-sq. meter per detector. However the actual quantity of detectors required, taking into consideration obstructions due to floor beams, ventilation, doors, windows etc., shall be worked out and supplied (based on the actual layout) and installed by the contractor.
5.03.17	The detectors shall not give false alarm due to high humidity, temperature, and velocity of air in the surroundings and static electricity conditions.

5.03.18 Process actuated switch devices such as pressure switches, flow switches, level switches, etc. shall be provided with suitable individual addressable interface (local or remote) units or modules so that these devices are addressable from the panel.

5.05.00 **Linear Heat Sensor Cables**

Application	Detection of Stationary fire
Type	Digital
Operating voltage	24 V DC
Approval	FM/UL
Conductor material	Steel
Insulation	Heat sensitive polymer
Outer Sheath	Black or colored PVC or flouropolymer suitable for the application environment

Installation features for LHSC

1. Mounting arrangement have been indicated in tender drawing.
2. The detection zone/loop divisions of LHSC system shall match with MVW spray zones. Conveyors where LHSC shall be installed shall be divided into no. of various zones whereas conveyor for which IR detector is installed shall be considered as one zone.
3. Linear heat sensing cable detector shall run in a zigzag fashion (with an included angle of 90 deg) on each top cable tray, bottom tray and every alternate intermediate trays of each section of cable tray without undue sagging and interfering the normal operations. All supporting materials for mounting of LHSC shall be provided by the bidder.

5.06.00 **Addressable Analog Intelligent Detectors**

In addition to the features specified under the item General requirements for all types of Detectors, the Addressable Analog Intelligent Detectors shall be provided with the following features:

a) Detectors not specifically listed for sensitivity testing from the control panel are not acceptable due to the expense involved with manual testing as required by NFPA 72E.

b) The detector shall be suitable for two-wire operation and two-way communication on the intelligent analog signaling circuit.

c) The detector shall display a steady LED when in the Alarm State. The LED shall flash when in stand by or normal mode.

d) Each detector in a loop shall have short circuit isolator suitable for style-7 wiring as per NFPA-72.

e) Address and sensitivity assignments shall be set preferably electronically. However, dip switches / rotary switches for the same are acceptable. The detectors shall be assigned a sensitivity level based on environment, time of day or any programmable function as required by the system user, and shall respond at that level whether in the "on line" or "default" mode.

f) The fire alarm control panel shall permit detector sensitivity adjustment through field programming of the system.

g) The detectors furnished shall be listed for use in environments as covered by Factory Mutual and UL and shall be installed according to the requirements of NFPA 72E for open area coverage.

5.07.00 **Multi sensor Detectors**

5.07.01 Multi sensor detectors shall incorporate a heat detection element and a photoelectric detection element. Both the elements shall be incorporated in a single unit. Both the elements shall be operative at all times and the fire signal shall be available from any or both elements combined together.

5.07.02 The detectors shall be sensitive to very low smoke densities of the order of say 0.05 g/m^3. Also it shall be possible to adjust this sensitivity on a step less basis over a range so that the optimum sensitivity could be selected at site to suit the conditions of installations. The coverage area of the smoke detection under standard NFPA test conditions shall not be less than 80-90m^2.

5.07.03 The detectors shall be complete with a mounting base that includes a terminal box into which the detector can be plugged in. Terminals for looping of the cables shall be provided.

5.07.04 All detectors shall be provided with built-in response and indicating lamps which shall give local visual indication, when it has operated in dense smoke conditions. The failure of lamp shall not prevent the function of detector.

5.07.05 In areas such as false ceiling where detectors themselves are not easily accessible, the remote response indicators outside the enclosed areas shall be provided to indicate the fire condition.

5.07.06 It shall be possible to replace any type of detector head by a different type detector without requiring change in cabling/panel wiring and condition of the zone, originally covered by the detector.

5.08.00 **System Configuration**

5.08.01 The Addressable Fire Alarm panel shall be able to communicate with repeater annunciation panel located at different places. The detectors or other devices of any other unit/area shall be addressable only from the respective Addressable Fire Alarm Panel, so that each of the Addressable Fire Alarm Panel is under the control of designated operating personnel at that location.

5.08.02 At least one spare loop shall be provided in each of the addressable type fire alarm panel located in FGD control equipment room with complete loop card and all other accessories so that Employer can expand the system in future. Further, at least 10% of loop capacity be left free in each of the connected loop in all the panels, so that, additional devices may be connected to the system in any of the loop by Employer in future.

5.08.03	FGD Fire alarm system shall be provided with necessary interface hardware and software for communicating fire alarms from this fire alarm panel to the main plant fire alarm control panel through potential free contacts.
5.09.00	**Analog Addressable Fire Detection and Alarm System**
5.09.01	General Requirements
5.09.02	This specification in general covers the functional requirements, and general design aspects of Microprocessor based, Analog Addressable Fire Detection Alarm / Annunciation and Control System.
5.09.03	The following description intends to describe only the brief hardware and functional requirements, scope of hardware requirements etc. but the actual configuration of the system shall be in line with the prevalent normal practices in the industry and shall conform to latest product range of selected manufacturer. The fire detection and control system offered shall be complete in all respects for the safe and reliable operation of the entire system. Any additional hardware/software than those mentioned herein required to make the system complete shall be included in the scope of the Bidder.
5.09.04	All the system and its equipment specifically detectors, interface modules, panels, power supply, battery chargers etc. shall be furnished from a single source and the same shall be new and latest state of the art products of manufacturer engaged in the manufacture of Integrated Microprocessor based Analog Addressable Fire Detection and Alarm System.
5.09.05	All equipments such as detectors, panels etc shall be approved and listed by UL/FM/LPCB/VDS.
5.09.06	All types of smoke detectors shall be of analogue addressable type. Conventional detectors with interface modules are not acceptable. Each zone of LHSC detector and each IR detector shall be provided with interface module.
5.09.07	All the fire detection systems, process actuated switch devices such as pressure/flow/temperature switches and relays of control functions shall be hooked up with the analogue addressable fire detection and alarm system. Required addressable interface units shall be provided for various switch devices by the bidder to make them addressable.
5.09.08	The wiring shall be of class-A as per NFPA-72.
5.09.09	Bidder shall provide isolators at the start & end of the loop.
5.09.10	The complete system shall include, but not be limited to the following : a) Master system CPU. b) Analog Addressable Fire Detection and Alarm System panels including alarm modules, system supervisory control modules, auxiliary output control modules etc. c) Power supplies, batteries and battery chargers. d) Analog addressable type smoke detectors.

e) Non addressable type conventional detectors (Linear heat sensing cable detector/ infra red type heat detector) and switching devices each with its own addressable interface modules.

f) Software and hardware as required for complete operation of the system.

g) Complete Wiring/cabling including its conduits/trays/fixtures etc.

i) The fire alarm control panel shall function as a communication interface between central processing unit and sensors. This panel shall have facility to process the input signal and to control all the input data received from initiating and indicating devices.

j) Fire alarm control panel shall have filters to ignore false alarm and increase sensitivity to real fire from sensors. The sensitivity of each detector should be automatically raised if detectors are gradually polluted due to dust and dirt entering inside the detector. If detectors are more polluted the control panel shall give a warning. The trouble report shall indicate the location of device requiring service.

k) Fire alarm control panel shall have printer to print out the alarm/ trouble occurrences.

l) The CPU shall serve as the systems central processor. Software shall be designed especially for fire alarm annunciation system applications and shall monitor status of processing alarms according to priorities, controlling/processing communications and synchronizing all system activities.

n) The system shall be able to recognize and indicate an alarm condition in a degrade mode of operation, in the event of processor failure or the loss of system communications to the circuit interface panels.

o) All devices shall be individually identifiable for its type, its zone location, alarm set value, alarm and trouble indication by an unique alpha numerical label.

p) The software logic modules and system database shall be programmable using a MS - Windows compatible program (latest version) on PC at site and required hardware shall be included in scope of supply. The system software programme shall be password protected and shall include full upload and download capability and during program upload or download through the PC, the capability of alarm reporting shall be retained. The software shall be downloaded to a PC for editing. The software shall enable Employer to add the spare loop provided in the fire alarm panels or addition of additional devices/detectors in any of the fire alarm panel.

q) The system shall support the use of Color Graphic display terminal for the display of information in an appropriate format.

r) The system shall include software for system data base, historical event log, logic, and operating system. The system shall require no manual input to initialise in the event of a complete power down condition. It shall return to an on line state as an operating system performing all programmed functions upon power restoration.

s) Activation of any fire alarm initiating device shall display (LCD alpha numeric display) message in describing the device originating the alarm condition at the Central monitoring station, at alarm panel, simultaneously at the repeater annunciation panel and shall initiate the associated protection systems & other

related control functions. Similarly activation of any supervisory circuit, (supervised valve closure, air pressure abnormal, fire pump trouble, water pressure low, etc.) or receipt of trouble report (primary power loss, open or grounded initiating or signaling circuit wiring, battery disconnect etc) shall display at the fire alarm control panel the origin of supervisory condition or origin of trouble condition as the case may be. It shall also record the occurrence of the event, the time of occurrence and the device initiating the same.

t) System configuration shall be menu driven and capable of being operated by, a person with no previous computer programming experience.

5.10.00 **System Functional Requirements**

5.10.01 The fire alarm panel shall evaluate the signals received from the detectors and shall handle the following functions:

1. System self monitoring and fault signaling.
2. Transmission of alarm and fault signals to the respective fire alarm panels and as well as in the repeater panel in fire station. Further, the panel shall activate a hooter/sounds in each of the area locally provided with fire/smoke detection system. Further, the system shall enable operation of spray system from the panel through monitoring station when the system operation is selected under remote, manual mode.
3. Initiate control functions like stoppage of conveyor, closure of fire doors, shutdown of draft fans, air-conditioning and ventilation plant/ equipment, opening smoke extraction vents, switching on smoke extraction equipment, emergency lighting etc.
4. Triggering stationary extinguishing systems such as clean agent system.
5. Supervising of unauthorised removal of a detector head from its base and giving a fault alarm on the control panel.
6. Supervising and monitoring the detection cabling, to indicate fault conditions in case of open/short circuit in the wiring.
7. Supervising by a separate annunciation window, changeover from mains supply to battery supply. “Mains On” indication shall be continuously on, as long as the main supply is available.
8. Facilitating simulation of fire conditions to enable the testing of circuits (without creating actual fire) under the test mode from the fire Alarm panel.
9. The control unit shall contain all the systems main switches lamps and fuses. Switches and lamps shall be easily identified even in closed casings.
10. All the circuits from the detectors to the panels and the circuits from panels to the actuating/operating devices of the respective extinguishing system shall be of closed loop type and shall be supervised for open-circuiting and short-circuiting of cables. The cable fault shall be audio-visually annunciated on the panels. Separate hooters with different tones shall be provided for ‘fault’ alarms and ‘fire’ alarms.
11. Actuate solenoid valve in spray system in case of fire from respective fire alarm panel. For achieving this if any additional hardware is required like relays, power supply and cables, the same may be provided.

5.10.02

Analog Addressable Fire Detection and Alarm System shall also meet the following functional requirements:

i. Each of the system shall support analog addressable detectors of all types, non-addressable type detectors/devices along with its addressable interface units/modules, Video display units etc.

ii. Each of the devices and/or detectors shall be individually, uniquely and continuously addressable by the panel to which it is connected.

iii. Detectors shall be interrogated for sensitivity settings from the control panel, logged for sensitivity changes indicating the requirement for cleaning and tested by a single technician using the field test routine. Sensitivity of each of the detectors made available in the panel shall be adjustable from the panel.

iv. The system shall be capable of self-adjustment to compensate for the accumulation of contaminants that would change the detector sensitivity in either a more or less sensitive direction to prevent false indications or failure to alarm in the actual fire conditions. The system shall annunciate a trouble condition when any analog addressable smoke detector reaches 80% of its alarm threshold due to gradual contamination, signaling the need for service and eliminating unwanted alarm.

v. Continuous supervision/monitoring of all the circuits and its components shall be made available from the panel for open, short circuits and grounding.

vi. The system shall be able to recognize and indicate and alarm condition in a degraded mode of operation, in the event of processor failure or the loss of system communications to the circuit interface panels.

vii. The system shall be programmable at site and required hardware shall be included in the scope of supply. The system software Programs shall be password protected and shall include full upload and download capability. During program upload or download the system shall retain the capability for alarm reporting. The system shall download to a PC for program editing. The software shall eligible employer to add the spare loop provided in the fire alarm panel or addition of additional devices/detectors in and of loop in any of the fire alarm panel.

viii. The system shall support the use of color interactive History Reporting video display terminal for the display of information in an appropriate format.

ix. The system shall include software for system database, historical event log, logic and operating system. The system shall require no manual input to initialize in the event of a complete power down condition. It shall return to an on line state performing all programmed functions upon power restoration.

x. Software logic modules and system database shall be programmable using a windows compatible program on PC. It shall be possible to program or edit the system database off site after down loading from the panel.

xi. All detectors shall incorporate internal automatic temperature compensation to overcome the effects of either high or low ambient temperatures in the installed environment on the detector sensitivity. The detectors shall be tested at a specified frequency by raising the detector sensitivity level to the alarm threshold, to check the operation of the detector without system alarming

automatically by the control panel.

xii. In an alarm or trouble condition the following shall occur on the monitoring station:

1. Sound an audible.
2. Write details of the actuation to a system log file on the PC.
3. Print the details of the actuation to the system printer.
4. Activate the color graphic display system controls, providing functions such as zooming, scrolling of Alarms, troubles, etc.

xiii. System configuration shall be menu driven and capable of being operated by a person with no previous computer programming experience.

5.11.00 **Panel Display Requirements.**

System display shall consist of minimum 80 character back lighted alphanumeric LCD display readable at any angle. Thirty-two character customer defined custom messages shall describe the location of the active device. In addition to the above, the following features shall be available.

a. The system shall be capable of programming to allow troubles occurred and restored in the system to be automatically removed from the display queue, eliminating the necessity for individual acknowledging of these events. This feature shall not affect the historical logging of events as programmed.

b. As a minimum an LED display for “Alarm”, “Audible Silenced”, “Supervisory”, “Trouble”, “Security”, “Power On”, And “Partial System Disabled”.

c. Touch activated membrane switches for “Alarm Acknowledge”, “Audible Silence”, “Supervisory Acknowledge”, “Security Acknowledge”, “Reset”, “Display Hold”, And “Display Next”.

d. All membrane switches shall be tactile with audible feedback when pressed.

5.12.00 **System Software Requirements**

i) The software shall control the operation, function and display of the graphic system and provide for automatic boot up and run from the hard disk drive of the computer.

ii) All project specifics actuating device programming shall be capable of being carried out on site via password access.

iii) The system shall monitor all alarm, supervisory; trouble and security conditions detected by the fire alarm control panel and provide separate disk based files, for each condition. These logs may be enabled, disabled, or cleared with password access.

This log information is not to be lost upon power failure or fire alarm control panel reset. A utility file shall be provided to sort the log data by date or by device and display this information either on the screen or the system printer.

iv) Selective memory storage up to 800 events, shall be stored in flash memory and displayed, printed or downloaded by classification for selective event reports.

a. Software shall allow selection of events to be logged, including; inputs as alarms, troubles, supervisors, securities, status changes and device verification; out puts, as audible control and output activation; action, as reset, set sensitivity, arm/disarm, override, password, set time and acknowledge.

b. Audible and visual indications shall be generated when memory is 80% and 90% full to allow downloading of data. The system shall be programmable circular logging, assuring that at least the last 400 events will always be stored in non-volatile memory.

v) Software has driven logic for adjusting the alarm threshold windows on detectors to compensate for accumulating contamination and keep detector response sensitivity constant. The software shall compensate for either over-sensitized or desensitized units, raising a system flag when a detector approaches the allowable limits of adjustment, indicating a requirement for cleaning.

a. Values shall be stored in non-volatile memory allowing activation of all tracking functions within 90 sec of system initiation from a "cold boot". During the boot sequence, alarms from detectors programmed with the feature shall be suppressed.

When the full data history is active all devices shall be checked and any active alarms displayed.

b. The control panel shall place each detector in the system in an alarm condition, transparent to the system user, every twenty-four hours as a dynamic check of the accuracy of the alarm threshold setting. Upon reception of the alarm report, the system detector shall be restored to its pretest state.

c. The system shall be capable of monitoring the stage of detectors and displaying a message when a detector is approaching the limits of adjustment as a result of contaminates. A second message shall be displayed when the detector reaches the limits of adjustment due to these contaminate.

d. The system shall be capable of recognizing that a detector has been cleaned, initiating a series of tests to determine if the cleaning was successful and display a detector cleaned message, readjusting that detectors normal sensitivity setting reference.

vi) When an alarm or trouble is registered at the fire alarm control panel the graphics system shall display the first screen image for the first actuated device. The system shall be capable of zooming in for further information if required. At all times when in the alarm or trouble mode the fire control panel status i.e. number of current alarms and or troubles is to be displayed on the graphics screen.

5.13.00 **Power Supply for Fire Alarm Panels & Repeater Alarm Panel**

5.13.01 One set of 24V DC redundant power supply system comprising of 2 x 100% chargers and 1 x 100% batteries shall be provided for fire alarm panel and repeater alarm panel. The

batteries for fire alarm system shall be sealed maintenance free lead acid type. The battery backup for each fire alarm panel and repeater alarm panel shall be 24 hours and 30 minutes (in alarm conditions). At least 25% of the devices shall be considered to be active in alarm conditions. Each of the redundant chargers shall be sized to meet connected load requirements and keep the connected batteries full charged (Float Mode). Furthermore, the charger shall be sized to enable the boost charge of a fully discharged battery in 10 hours while feeding the load.

5.13.02 The batteries shall be sized as per relevant IEEE standard. For battery sizing calculation, an aging factor of 0.8, a temperature correction factor (based on temperature of 4 deg. C), voltage drop of 2V in cables. Capacity factor, Float Correction Factor, as per Battery Supplier Standard, shall be taken into consideration, if applicable and ambient temperature shall be considered as the electrolytic temperature. The sizing of the battery shall be as approved by Employer during detailed engineering.

5.13.03 The battery chargers and batteries shall be placed at a suitable location inside the fire alarm panel with partitions.

5.13.04 The detailed specification related to power supply system of fire detection & protection system shall be as specified in other sections of the technical specification.

5.14.00 **Control & Instrumentation requirements**

5.14.01 Not Used.

5.14.02 Not Used.

5.14.03 The specification related to Basic design criteria, Measuring Instruments, Process connection & piping, Control panels, Type test requirements etc shall be as specified in other sections of the technical specification.

5.15.00 **Cabling for fire alarm system**

All instrumentation cables twisted & shielded, FRLS PVC insulated and sheathed data highway / fibre optical cables, short term fire proof cables including prefabricated cables (with plug-in connectors) etc shall be provided by Contractor.

The contractor shall follow the cable philosophy as below:

Application		Type of cable
From	To	
PLC cabinets	PC, Printers etc.	As Mfr.'s Standard. However, connection between PLC and the remote I/Os shall be through fibre optic cable by Bidder if length is>300 M & coaxial cable if length<300 M
Detectors (including detectors mounted inside panels) /Any loop device	Detector (including detectors mounted inside panels) / Isolator/ Interface unit	Shielded, Twisted, PVC Cu. FRLS cables type "S" Refer Note 2, 3, 4 and 5 below.
Detectors (including detectors mounted inside panels) / Isolator / Interface Unit	JB	Shielded, Twisted, PVC Cu. FRLS cables type "S" Refer Note 2, 3, 4 and 5 below.

JB	Fire alarm Panel	Shielded, Twisted, PVC Cu. FRLS cables type "S" Refer Note 2, 3, 4 and 5 below.

Notes:

1. 10% spare pair shall be provided for all cables having more than four pairs.
2. Type "S" cable shall be multicore control cable having overall shielding & specification similar to instrumentation cable except insulation thickness and voltage grade which shall be 1100 V. Type "S" cable shall also satisfy requirements of Article 760 of NFPA 70.
3. Over and above, contractor may note that short term fire proof cables shall be provided for coal handling plant and inert gas protected areas. Short term fire proof cables shall be Mineral insulated copper conductor and copper sheathed type satisfying requirements of Fire resistance, safety in the industrial application areas mentioned in the specification and also, shall be approved by UL standards and certified by LPCB. The contractor shall provide all the cables so as to complete the system
4. Cable size of 2 core 1.5 sq.mm shall be used for loop wiring in-case of both control cable and short term fire proof cable.
5. Cable size of 2 core 2.5 sq.mm shall be used to provide power supply to various devices in the loop in-case of both control cable and short term fire proof cable.
6. The detailed specification of instrumentation cables and optical fiber cable shall be as specified in other sections of the technical specification.
7. Detector cables outside the building shall be corrugated steel taped armoured laid through cable trays wherever available and for rest of the areas, cable shall be buried at 600 mm depth with sand filling and brick covering at the top.
8. Detector cable within the building shall be either unarmoured & laid through galvanized iron (GI) conduits or armoured cables, as per the standard and proven practice of the manufacturer.

5.16.00 **Detection System for Conveyors**

i) **Linear Heat Sensor Cables:**

a) The LHS cable detector for each conveyor to be provided for both forward and return conveyors and shall be mounted as per the standard practice of the manufacturer/ supplier. Suspension of LHSC through flexible chains is a preferred arrangement. Further, LHS cable shall also be provided for return side of conveyors inside the bunker house.

b) The detection zone/loop divisions of LHSC system shall match with the MVW spray system.

c) Upon detection of fire either by QB detector or LHSC detector, the spray system shall be initiated. It shall also initiate spray system for the two adjacent zones after a time delay settable at site.

d) The LHSC detector shall be provided with suitable interface unit, which shall generate/ make the signal compatible with fire alarm panel.

(e.) Type: Digital, Operating Voltage: 24V DC, Conductor Material: Steel, Approval: FM/UL

5.17.00 **Detection System of Cable Galleries**

i) In cable galleries, MVW spray system shall be actuated either by detection of fire by Linear Heat sensing cable detectors or by fire signal from Multisensor detection system. Apart from the automatic operation of spray system in the detected zone, the adjacent two zones shall also be sprayed with water automatically after a set time delay simultaneously.

ii) LHSC detector shall run in a zig-zag fashion (with an included angle of minimum 90° atleast) in each of the top tray, bottom tray and in every alternate trays. The mounting arrangement of LHSC detector shall be as per manufacturer's standard practice.

iii) The detection zone/ loop divisions shall match with MVW spray zones.

5.18.00 **Multisensor Detection System**

i) Upon detection of fire, multisensor detector shall be annunciated in the respective panels and shall activate a local hooter/sounder in the areas where fire is activated and this fire signal shall be employed to initiate the fire extinguishing system of that area such as automatic MVW spray system of cable galleries, fire extinguishing system of Control rooms/Control Equipment Rooms.

ii) Cross zoning of the signal from two adjacent multisensor detectors shall be employed to initiate the fire extinguishing system of inert gas protected areas and MVW spray system of cable galleries.

iii) Multisensor detector shall be provided for return air ducts of main plant, which shall consist of intake probe, detector housing, and exhaust pipe etc. The detector shall be mounted outside the duct.

iv) The design coverage area for detectors (to be considered) shall not exceed 25 Sq.M. for each detector.

6.00.00 PIPING AND VALVES

6.01.00 **General Data for Pipes etc.**

i) Mild steel as per IS:1239 (Part-I) medium grade (upto 150 NB) & as per IS:3589 Gr 410 (above 200 NB) or Equivalent for pipes normally filled with water.

ii) Mild steel as per IS:1239 (Part-I) medium grade (upto 150 NB) & as per IS:3589 Gr.410 (above 200 NB) or Equivalent and galvanised as per IS:4736 for pipes normally empty and periodically charged with water and foam system application.

iii) Pipe protection shall be as follows :

To prevent soil corrosion buried pipes / pipes in trench shall be properly lagged with corrosion protective tapes of coal tar type as per IS:15337 or AWWA C 203. The total thickness of protective tapes to be applied on buried pipes / pipes in trench shall be 4.0mm. This can be achieved by using 4.0mm thick tape in single layer or 2.0mm thick tape in double layer.

iv) Pipe thickness:

a) For Pipe sizes upto 150 NB and above: As per IS:1239 Part-I medium grade.

b) For Pipe sizes 200 NB and above refer Annexure-I.

v) All valves shall be as per applicable IS/BS codes & approved by TAC for specific fire protection system and shall be provided with locking arrangement (with locks) in open or close condition. Further, all gate/butterfly valves of size 200 mm & above shall be provided with spur gear reduction unit.

vi) All the flanges and counter flanges shall conform to ANSI B 16.5 Cl 150.

vii) Strainer Body as per IS:2062 (tested).

viii) Pipe Fittings

1) The material shall conform to ASTM A 234 Gr WPB or ASTM A 105 or equivalent and dimensional standard conforming to ANSI B 16.11 (socket & threaded type), ANSI B 16.9 (for butt welded fittings) and ANSI B 16.5 (for flanges and flanged fittings) as the case may be. Further, galvanised malleable cast iron fittings as per IS:1879 in Cast iron fitting as per BS-1641 are also acceptable.

2) **Grooved couplings :** Vendor may also use mechanical grooved couplings type fittings in GI pipe lines for HVW / MVW spray system. All materials and products shall be either Underwriters Laboratories (UL) Listed or Factory Mutual (FM) Approved and installed in accordance with NFPA Standard 13 / equivalent Standard.

3) The fittings shall be galvanised as per IS : 4736 for galvanised pipe application. In case of branching connections from GI mains for spray piping network, socket may be welded for more than two pipe reduction instead of standard tees.

4) Fabricated fittings shall not acceptable up to pipe size to 300 NB. For sizes 350 NB and above, fittings may be fabricated as per BS:2633/BS:534.

ix) Welding of galvanised iron pipes/fittings would be permitted provided the same is carried out by means of special electrodes suitable for the above application and the same shall be approved by Employer. After, welding, welded portions shall be applied with three coats of zinc silicate treatment/rich paint over one coat of suitable primer. Further, the Contractor shall provide proper zinc paint at the point of welding.

7.00.00 PAINTING

7.01.00 All the Equipments shall be protected against external corrosion by providing suitable painting.

7.02.00 The surfaces of stainless steel, Gunmetal, brass, bronze and non-metallic components shall not be applied with any painting.

7.04.00 **All Steel Surfaces (external) exposed to atmosphere (outdoor installation)**

(i) **Surface Preparation :** The steel surfaces to be applied with painting shall be thoroughly cleaned before painting by wire brushing, air blowing, etc.

(ii) **Painting:** One (1) Coat of red oxide primer of thickness 30 to 35 microns followed up with three (3) coats synthetic enamel paint, with 25 microns as thickness of each coat. For plant at coastal area, epoxy resin based zinc phosphate primer followed by epoxy resin based paint pigmented with titanium di-oxide shall be used in place of enamel paints.

7.05.00 **All Steel Surfaces (external) inside the building (indoor installation)**

(i) **Surface Preparation :** The steel surfaces to be applied with painting shall be thoroughly cleaned before painting by wire brushing, air blowing, etc.

(ii) **Painting:** One (1) Coat of red oxide primer of thickness 30 to 35 microns followed up with two (2) coats synthetic enamel paint, with 25 microns as thickness of each coat. For plant at coastal area, epoxy resin based zinc phosphate primer followed by epoxy resin based paint pigmented with titanium di-oxide shall be used in place of enamel paints.

7.06.00 **Deluge Valves, Alarm Valves, Foam monitors, Water monitors, Foam Proportioning equipments, Foam makers, etc.**

Painting of all equipments /.components of FDPS package shall be as per manufacturer's standard practice or as detailed below whichever is superior in quality.

Environment	Paint scheme	Total DFT
Normal / Mild Corrosive Environment	Primer- zinc filled epoxy Finish – Aliphatic Polyurethane (shade RAL3000)(P.O Red)	Min 125 microns
Corrosive Environment (as in coastal areas)	Primer- zinc filled epoxy Intermediate – Epoxy MIO Finish – Aliphatic Polyurethane (shade RAL3000)(P.O Red)	Min 200 microns

ANNEXURE-I

PIPING THICKNESS:

Pipes for sizes 200 NB & above shall confirm to IS: 3589 Grade 410. The final thickness shall not be less than that specified as per IS: 3589 as indicated below.

Nominal pipe Size (mm)	Outside Diameter (mm)	Wall Thickness (mm)
200 NB	219.1	6.3
250 NB	273	6.3
300 NB	323.9	7.1
350 NB	355.6	8.0
400 NB	406.4	8.0
450 NB	457	8.0
500 NB	508	8.0
600 NB	610	8.0

Annexure-II

Technical Data:

1. **Hydrant Valve**	Oblique female type as per IS:5290
	MOC: Body/bonnet/stop valve/valve seat/trim : SS304/SS316
2. **Water monitor**	As per IS:8442 Type-I, Size: 75mm, Nozzle dia: 38mm
	MOC: Water barrel/reducer/elbow: CS (seamless)/SS Nozzle: Copper alloy / SS confirm in to IS:3444
3. **Water branch pipe & nozzle**	As per IS:903 / IS:2871
	MOC: Branch pipe: SS316 (Gr 4 of IS:3444) (both ends) Nozzle : SS316 (Gr 4 of IS:3444), Size: min 16mm & max 25mm
4. **Water line Gate / Sluice Valve**	- Design Code: a) IS:14846 or BS:5150 (for valves coming inside fire water pump house) b) BS:5150 (for valves at other locations) - Pressure rating: PN1.6 (as per IS:14846) / PN16 (as per BS:5150) -Working Pr. :12Kg/cm2
	MOC: Body/bonnet/Yoke/Wedge : CI to IS:210 FG-200 Spindle: SS to ASTM-A-276 type 410
5. **Butterfly Valve**	Design Code: Double flanged or lugged wafer type of low leakage rate confirming to BS:EN:593/API-609/AWWA C-504 Pressure class: PN 16
	MOC: Body & Disc : Cast Iron, Shaft : SS 410 / SS 420 Seat Rings : EPDM

SUB-SECTION-I-M5

ECW SYSTEM

EQUIPMENT COOLING WATER SYSTEM

1.00.00 **BRIEF DESCRIPTION OF SYSTEM**

1.01.00 The Equipment Cooling Water System shall be provided for Flue Gas Desulphurization system Auxiliaries as described.

1.02.00 The Equipment cooling water system shall be common for all the three units. The cooling system for Flue Gas Desulphurization system Auxiliaries shall be of closed circuit type with demineralised (DM) water in the primary circuit. Clarified water from Cooling Tower basin (cooling Tower specific to FGD system) shall be used in the secondary circuit for cooling the primary circuit DM water. Hence all materials of construction used in primary and secondary side of the equipment cooling water system should be suitable for the water quality. The scheme shall be as per relevant tender drawing listed elsewhere in the specification. The DM water make-up to the primary circuit shall be provided as indicated in the relevant tender drawing.

1.03.00 Quality of water

(a) Primary circuit - Demineralised (DM) water

(b) Secondary circuit - Clarified water

Sodium Hydroxide dosing equipment shall be provided to maintain pH around 9.5 in the D.M. water side.

2.00.00 **SYSTEM DESIGN (UNIT AU□ILIARIES)**

2.01.00 The ECW system design for Flue Gas Desulphurization system Auxiliaries shall be as follows:

A centralized/combined ECW system is envisaged for FGD system auxiliaries for the stage. In the primary circuit, a set of Demineralised cooling water (DMCW) pumps of 1x100% capacity/unit shall discharge cooling water through 1X100% capacity plate type heat exchangers (PHE)/ unit for cooling of the FGD system auxiliaries. The outlet header from plate heat exchangers shall be suitably branched off to supply cooling water to the unit auxiliaries ECW header and also to the individual Flue Gas Desulphurization system Auxiliaries coolers. No booster pumping system shall be provided in the primary system. Outlet from these auxiliary coolers shall be connected back to unit auxiliaries ECW header and which in turn connected into a common return header and led back to the suction of DMCW pumps to complete the closed loop primary cooling circuit. Refer tender drawing no. 4410-000-POM-A-00 for complete scheme.

2.02.00 The secondary water system shall receive water through a tapping on ACW cold water header emerging from the cooling tower. This water will be pressurized by a set of 1 x 100% capacity auxiliary cooling water pumps and fed through the plate heat exchangers of FGD systems, back to the ACW discharge hot water header.

	Make up to the closed loop secondary circuit shall be provided in cooling tower basin from terminal point indicated in tender drawing no.4410-000-POM-A-01.
2.03.00	The heat exchangers shall be designed with a (Terminal Temperature Difference) TTD of 3 deg.C (max.).
2.04.00	Self cleaning Filters To prevent fouling on the secondary cooling waterside of the PHE, self-cleaning type filters, (2 X 100%) shall be provided by the bidder on the secondary cooling water inlet header to the PHE.
2.05.00	Frame of each plate type heat exchanger shall have about 25% extra capacity i.e. the frame shall be able to accommodate about 25% extra plates.
2.06.00	Make up to the closed loop primary circuit shall be provided from terminal point indicated in tender drawing no.4410-000-POM-A-01. Necessary piping connections to be done by bidder.
2.07.00	Required orifices shall be provided in the primary and secondary circuit of Equipment Cooling Water system for balancing of pressure.
3.00.00	**CONSTRUCTION FEATURES**
3.01.00	**P□□ □□ □□d H□□□(PHE) E□□□□□□□r□**
3.01.01	The general design and construction features of various pumps of the Equipment Cooling Water System shall be as per the Annexure titled "**G□□□r□□S□□□□□□□□□□□□ F□r P□□ □□**" enclosed with this sub-section.
3.01.02	Specific features of various pumps and plate type heat exchangers of ECW system shall be as follows :-

A) P□□ □□-(Pr□□ □r□ □□d □□□□□d□r□)

i)	Type	: Horizontal Centrifugal type
ii)	Casing	: Axially split type.
iii)	Impeller type	: Closed
iv)	Speed	: 1500 rpm (max.)
v)	Drive transmission	: Direct
vi)	Seal	: Mechanical seal for primary water pumps and Self water/gland for secondary side
vii)	Lubrication	: Oil/Grease/Self liquid.
viii)	Coupling	: Spacer type.

ix) Drain plug, vent, priming connection, : Required.

x) Coupling guard, lifting lugs : Required

xi) Operating range : 40% to 120% of rated flow

xii) Pump characteristic : Non overloading type & stable

xiii) Parallel operation : Required.

xiv) No damage should occur to any component due to flow reversal.

xv) Material of Construction:

	Pr□□ □r□ S□d□ DM C□□□□□ W□□r P□□ □□	**S□□□□d□r□ □d□ A□□□□r□ C□□□□□ W□□r P□□ □□**
a) Casing	ASTM-A-351 CF8M	2.5% Ni CI to IS 210 GR FG-260
b) Impeller	ASTM-A-351 CF8M	Bronze to IS 318 Gr. I/II or SS – 316 / CF8M
c) Impeller Wearing Rings	SS-316	High leaded bronze to IS-318 Gr.V / SS -316 in case of SS Impeller.
d) Casing wearing rings	--------As per manufacturer's Standard -----	
e) Shaft	SS-316	SS-316
f) Shaft Sleeve	SS-410	SS-410
g) Gland	----------	2.5% Ni CI to IS 210 GR FG-260
h) Lantern Ring	SS-316	Bronze
i) Gland packing	----------	Teflon Impregnated /Manufacturer's standard (Non-Asbestos type)
i) Mechanical Seal	Manufacturer's Std	----------
j) Base plate	---------- MS fabricated - IS:2062 ----------	
k) Stuffing Box	----------	2.5% Ni CI to IS 210 GR – FG-260
l) All fasteners	Stainless steel	Stainless steel

B) P□□□□ □□□□ H□□□E□□□□□□□r□ - D□□□□□ P□r□□ □□□r□

(i) Type : Plate type, single pass

(ii) Design pressure : Maximum expected pressure to which PHE may be subjected plus 5% additional margin. Maximum expected pressure shall be based on the shut-off head of pumps (either the secondary or primary side whichever is maximum) plus the suction pressure of the pumps.

M□□r□□□□C□□□r□□□□□

(i)	Heat transfer plate	:	SS-AISI-316
(ii)	Compression / Fixed plates	:	IS:2062
(iii)	Movable pressure plate	:	IS-2062
(iv)	Guide rail	:	IS-2062 with stainless steel cladding
(v)	Support Beam/Column	:	IS 2062
(vi)	Plate gasket	:	Nitrile Rubber
(vii)	Nozzle	:	Carbon steel
(viii)	Flanges	:	Carbon steel
(ix)	Nozzle flange Gasket	:	3 mm wire inserted Red Rubber.
(x)	Nozzle flange Bolts/ Nuts	:	SA 193 B7/SA 194 2 H.
(xi)	Name plate	:	AISI-316
(xii)	Tightening Rods	:	IS-1367 or equivalent

O□□r F□□□□r□□:

(i) Double sealing arrangement should be provided at outer edge and around ports to avoid intermixing of fluids. The inter-space should be vented to atmosphere.

(ii) Plate thickness should be adequate to withstand all operating conditions but not less than 0.6 mm.

(iii) Frame of exchanger should be designed so that 25% additional plates can be added in future.

(iv) Flanges shall be per ANSI B 16.5 for equivalent.

(v) Thickness of pressure and frame plates as per ASME sec. VIII Div. I.

(vi) Minimum corrosion allowance for heat exchanger parts shall be 1.6 mm.

(vii) After pressing all the plates shall be tested by light box/vacuum/air chamber test as per manufacturers' standard practice.

(viii) The corrosion allowance for the heat exchanger plate such as pressure parts (support plates), nozzles, sliding channels and frame shall be 1.6mm (minimum).

3.02.00 **P□□□□□□ □□□□□ □T□□□□:**

Construction features of Piping, Valves and tanks shall be as per the sub-section titled "Low Pressure Piping" of this Technical specification.

□.0□.00 **S□□□ C□□□□□□□ F□□□r□:**

(a) Body of filter shall conform to IS:210Gr. FG260 or ASTM-A-515 Gr. 75/IS: 2062 and internally painted with epoxy.

(b) Strainer element shall be constructed of perforated stainless steel plate linked with stainless steel (SS316) screen

(c) The mesh size shall be selected on the basis of average clearance between the plates of the plate heat exchanger.

4.00.00 **SI□ING □DESIGN CRITERIA**

4.01.00 **P□□ □□**

a)	Flow	:	<u>Secondary Water pumps:</u> Bidder to decide <u>Primary Water pumps.</u> Bidder to decide
b)	Head	:	As per system requirement +10% margin on friction head.
c)	Motor rating	:	Continuous motor rating (at 50 degree C ambient) for all pumps shall be at least ten percent (10%) above the maximum power requirement at any condition of the entire characteristic curve of the pump.
d)	No. of Primary side pumps	:	Four nos (3W + 1 S)
e)	No. of Secondary water pumps	:	Four nos (3W + 1 S)
f)	Re-circulation control Valves, Piping & Pressure break down orifice.	:	Required
g)	Additional design requirements	:	a) To be referred in the Annexure sub-section titled "GENERAL SPECIFICATION FOR HORIZONTAL PUMPS" enclosed with this section.

4.02.00 **P□□□ T□□□ H□□□E□□□□□□r□**

a)	Design Secondary water inlet temperature	:	Design CWT of cooling tower plus 2 deg C.

	b)	Secondary water outlet	: Bidder to decide
	c)	Primary water outlet temperature	: Bidder to decide
	d)	Overall fouling factor (minimum) (f)	: 0.8×10^{-4} Hr M^2 deg C/Kcal
	e)	No. of heat exchangers	: 1 x 100% capacity and one common standby
	f)	Overall Heat transfer coefficient [U(o)]	: As per manufacturer's design
	g)	Dirty Heat transfer Coefficient [U(d)]	: [1 / (1/U(o) +f)]
	h)	Heat Transfer Area (Sqm)	: $\frac{\text{Total Heat Load (in Kcal/hr)}}{\text{U(d) x LMTD}}$
	i)	Heat transfer area of PHE shall be selected such that each Sq.M of heat transfer plate shall transfer not more than 6500 Kcal/hr.	

5.00.00 **INSTRUMENTATION**

5.01.00 All instruments, such as thermowell, temperature element, flow element, pressure/DP and temperature gauge/transmitters/sensors/switches, DP switch, pH analyser, Rotameter etc. alongwith associated devices should meet the requirement as specified in relevant sub-section of this Technical Specification and shall be sufficient to meet all interlock/protection & operation requirement.

5.02.00 Minimum instrumentation required for the Equipment Cooling water system shall be as per tender P & I Diagram wherever included in the specification.

6.00.00 **CONTROL □OPERATION PHILOSOPHY**

6.01.00 The pump suction valves, re-circulation valves and discharge valves shall be motor actuated type to enable remote operation.

6.02.00 Pump suction valves shall be provided with required limit switches for interlock & control.

6.03.00 The pumps shall be designed to operate under discharge valve open and as well as in close condition.

6.04.00 Wherever more than one sump/tank is provided, Suction header shall be interconnected such a way that any of the sump/tank may be selected from the panel for operation.

6.05.00 Any of the pump shall be selectable as standby duty. Standby pump shall come into operation on tripping of working pump or inadequate pressure in the discharge header.

6.06.00 Suction and Discharge valves of pumps shall be interlocked with start/stop of respective pumps.

6.07.00	Local emergency stop provision for each pump shall be provided.
6.08.00	All the working pumps shall be interlocked with the suction level or suction pressure condition as the case may be. Pumps operation shall be interlocked with the high discharge condition so that the pump may not operate at shut-off pressure.
6.09.00	Automatic inlet valves at supply line to each of the tank/sump shall be provided so that the valves shall open and close at low-level and very high-level respectively.
6.10.00	A control valve shall be provided to maintain a constant pressure differential between the main supply and return headers of DM water. The valve will bypass flow to maintain a constant return header pressure to compensate for fluctuations in coolant flow to the process heat exchangers due to modulating control valves on the process coolers or if any cooler goes out of service in DM circuit.
6.11.00	Alarm to indicate high differential pressure across self-cleaning filter strainers, heat exchangers as the case may be.
6.12.00	Manually operating globe / regulating valves shall be provided in the water side of each of the cooler outlet for control of flow as specified in respective equipment specification.
6.13.00	Detailed Interlock & protection logic to be implemented in FGD control system shall be provided by the contractor and the same shall be as finalized during detailed engineering.
7.00.00	**PAINTING**
7.01.00	All the equipments such as pumps, tanks and plate type exchangers of this system shall be protected against external corrosion by providing suitable painting as mentioned below. For painting of valves and piping, relevant section shall be referred to.
7.02.00	The surfaces of stainless steel, Gunmetal, brass, bronze and non-metallic components shall not be applied with any painting.
7.03.00	The steel surface to be applied with painting shall be thoroughly cleaned before applying painting by brushing, shot-blasting etc as per the agreed procedure.
7.04.00	For all the steel surfaces exposed to (outdoor installation) atmosphere, a coat of chlorinated rubber based zinc phosphate primer of minimum thickness DFT of 50 microns followed up with undercoat of chlorinated rubber paint of minimum DFT of 50 microns shall be applied. Then, intermediate coat consisting of one coat of chlorinated rubber based paint pigmented with Titanium di-oxide with minimum DFT of 50 microns and topcoat consisting of two coats of chlorinated rubber paint of approved shade and colour with glossy finish and DFT of 100 microns shall be provided. Total DFT of paint system shall not be less than 200 microns.

7.05.00	For all the steel surfaces inside the (indoor installation) building, a coat of red oxide primer of minimum thickness of 50 microns followed up with undercoat of synthetic enamel paint of minimum thickness of 50 microns shall be applied. The top coat shall consist of two coats each of minimum thickness of 50 microns of synthetic enamel paint and thus total thickness shall be minimum 200 microns.
7.06.00	Internal surfaces of ECW over tank shall be painted with One coat of unmodified epoxy resin alongwith polyamide hardener and minimum two (2) coats unmodified epoxy resin alongwith Aromatic adduct hardener and total thickness of primer and paint should not be less than 400 microns.

GENERAL SPECIFICATION FOR HORI□ONTAL PUMPS

(1) **SCOPE**

This specification covers the design, material, construction features, manufacture, inspection, testing the performance at the Vendor's/Sub-Vendor's Works and delivery to site of Horizontal Centrifugal Pumps.

(2) **CODES AND STANDARDS**

The design, material, construction, manufacture inspection and performance testing of Horizontal Centrifugal Pumps shall comply with all currently applicable statutes, regulations and safety codes in the locality where the Equipment will be installed. Nothing in these specifications shall be construed to relieve the Vendor of this responsibility. The Equipment supplied shall comply with the latest applicable Indian Standards listed below. Other National Standards are acceptable, if they are established to be equal or superior to the Indian Standards.

(3) **LIST OF APPLICABLE STANDARDS**

IS : 1520	:	Horizontal Centrifugal Pumps for clear cold fresh water
IS : 5120	:	Technical requirements of rotodynamic special purpose pumps
API : 610	:	Centrifugal pumps for general refinery service.
IS : 5639	:	Pumps Handling Chemicals & corrosion liquids
IS : 5659	:	Pumps for process water
HIS	:	Hydraulic Institute Standards, USA
ASTM-1-165-65:		Standards Methods for Liquid Penetration Inspection.

In case of any contradiction with aforesaid standards and the stipulations as per the technical specifications as specified hereinafter the stipulations of the technical specifications shall prevail.

(4) **DESIGN REQUIREMENTS**

(a) The Pump shall be capable of developing the required total head at rated capacity for continuous operation. Also the pumps shall be capable of being operated to give satisfactory performance at any point on the HQ characteristics curve. The operating range of the pump shall be 40% to 120% of the duty point unless otherwise mentioned elsewhere. The maximum efficiency

of pump shall preferably be within ± 10% of the rated design flow as indicated in data sheets.

(b) The total head capacity curve shall be continuously rising from the operating point towards shut – off without any zone of instability with the highest head at shut-off condition. Shut-off head shall be more than the rated design head and the percentage variation may vary depending on the specific speed of the pumps (i.e) 10-15% for pumps of specific speed upto1000 US units, about 15 to 20% for specific speed in the range of 1000 to 2000 US units, about 20% to 40% for specific speed of 2000 to 4000 US units and above 50% for specific speed of 4000 to 7000 US Units

(c) Pumps of a particular category shall be identical and shall be suitable for parallel operation with equal load division. The head Vs capacity and BHP Vs capacity characteristics should match to ensure even load sharing and trouble free operation throughout the range. Components of identical pumps shall be interchangeable.

(d) Pumps shall run smoothly without undue noise and vibration. Peak to peak vibration limits shall be restricted to the following values during operation:

S□□□d	A□□□r□□□□□ B□□r□□□	S□□□□□ B□□r□□□
1500 rpm and below	75.0 micron	75.0 micron
3000 rpm	50.0 micron	65.0 micron

The noise level shall not exceed 85 dBA overall sound pressure level reference 0.0002 microbar (the standard pressure reference for air sound measurement) at a distance of 1 M from the equipment surface.

(e) The pumps shall be capable of starting with discharge valve fully open and close condition. Motors shall be selected to suit to the above requirements.

(f) Pumps shall be so designed that pump impellers and other accessories of the pumps are not damaged due to flow reversal.

(g) The Contractor under this specification shall assume full responsibility in the operation of pump and motor as a unit.

(5) **DESIGN CONSTRUCTION**

(a) Design and construction of various components of the pumps shall conform to the following general specifications. For material of construction of the components, data sheets shall be referred to.

(b) Pump Casing

Pump casing shall have axially or radially split type construction as specified. The casing shall be designed to withstand the maximum shut-off pressure developed by the pump at the pumping temperature.

Pump casing shall be provided with a vent connection and piping with fittings & valves. Casing drain as required shall be provided complete with drain valves, piping and plugs. It shall be provided with a connection for suction and discharge pressure gauge as standard feature. It shall be structurally sound to provide housing for the pump assembly and shall be designed hydraulically to minimum radial load at part load operation.

(c) Impeller

Impeller shall be closed, semi-closed or open type as specified elsewhere and designed in conformance with the detailed analysis of the liquid being handled.

The impeller shall be secured to the shaft, and shall be retained against circumferential movement by keying, pinning or lock rings. On pumps with overhung shaft, impellers shall be secured to the shaft by a lockout or cap screw which tightness in the direction of normal rotation.

(d) Impeller/Casing Wearing Rings

Replaceable type wearing rings shall be provided at suitable locations of pumps as per manufacturer's standard practice. Suitable method of locking the wearing ring shall be used.

(e) Shaft

The critical speed shall be well away from the operating speed and in no case less than 130% of the rated speed.

The shaft shall be ground and polished to final dimensions and shall be adequately sized to withstand all stresses from rotor weight, hydraulic loads, vibration and torques coming in during operation.

(f) Shaft Sleeves

Renewable type fine finished shaft sleeves shall be provided at the stuffing boxes/mechanical seals. Length of the shaft sleeves must extend beyond the outer faces of gland packing of seal end plates so as to distinguish between the leakage between shaft and shaft sleeve and that past the seals/gland.

Shaft sleeves shall be fastened to the shaft to prevent any leakage or loosening. Shaft and shaft sleeve assembly should ensure concentric rotation.

(g) Bearings

Heavy duty bearings, adequately designed for the type of service specified in the enclosed pump data sheet and for long, trouble free operation shall be furnished.

The bearings offered shall be capable of taking both the radial and axial thrust coming into play during operation. In case, sleeve bearings are offered additional thrust bearings shall be provided. Antifriction bearings of standard type, if provided, shall be selected for a minimum life 20,000 hrs. of continuous operation at maximum axial and radial loads and rated speed.

Proper lubricating arrangement for the bearings shall be provided. The design shall be such that the bearing lubricating element does not contaminate the liquid pumped. Where there is a possibility of liquid entering the bearings suitable arrangement in the form of deflectors or any other suitable arrangement must be provided ahead of bearings assembly.

Bearings shall be easily accessible without disturbing the pump assembly. A drain plug shall be provided at the bottom of each bearings housing.

(h) Stuffing Boxes

Stuffing boxes of packed ring construction type shall be provided wherever specified. Packed ring stuffing boxes shall be properly lubricated and sealed as per service requirements and manufacturer's standards. If external gland sealing is required, it shall be done from the pump discharge. The Bidder shall provide the necessary piping valves, fittings etc. for the gland sealing connection.

(i) Mechanical Seals

Wherever specified in pump data sheet, mechanical seals shall be provided. Unless otherwise recommended by the tenderer, mechanical seals shall be of single type with either sliding gasket or bellows between the axially moving face and shaft sleeves or any other suitable type. The sealing faces should be highly lapped surfaces of materials known for their low frictional coefficient and resistance to corrosion against the liquid being pumped.

(j) The pump supplier shall coordinate with the seal maker in establishing the seal chamber of circulation rate for maintaining a stable film at the seal face. The seal piping system shall form an integral part of the pump assembly. For the seals under vacuum service, the seal design must ensure sealing against atmospheric pressure even when the pumps are not operating. Necessary provision for seal water supply along with complete piping fittings and valves as required shall form integral part of pump supply.

(k) Pump Shaft Motor Shaft Coupling

The pump and motor shafts shall be connected with an adequately sized flexible coupling of proven design with a spacer to facilitate dismantling of the pump without disturbing the motor. Necessary coupling guards shall also be provided.

(l) Base Plate

A common base plate mounting both for the pump and motor shall be furnished. The base plate shall be fabricated steel and of rigid construction, suitably ribbed and reinforced. Base plate and pump supports shall be so constructed and the piping unit so mounted as to minimise misalignment caused by mechanical forces such as normal piping strain, internal differential thermal expansion and hydraulic piping thrust. Suitable drain troughs and drip lip shall be provided.

(m) Assembly and Dismantling

Assembly and dismantling of each pump with drive motor shall be possible without disturbing the grouting base plate or alignment.

(n) Drive Motor (Prime Mover)

Continuous Motor rating (at 50 0 C ambient) shall be at least ten percent (10%) above the maximum load demand of the pump in the entire operating range to take care of the system frequency variation and in no case less than the maximum power requirement at any condition of the entire characteristic curve of the pump. The KW rating of the drive unit shall be based on continuously driving the connected equipment for the conditions specified. However, in cases where parallel operation of the pumps are specified, the actual motor rating is to be selected by the Bidder considering overloading of the pumps in the event of tripping of operating pump(s).

COOLING TOWER FOR FGD SYSTEM

1.00.00 SYSTEM DESCRIPTION

1.01.00 Cooling Tower shall be sized to meet the auxiliary cooling water requirement as specified in design criteria.

1.02.00 Branch pipe shall be provided with a butterfly valve and each cell shall be provided with a cell isolation valve. All valves shall be motorized.

1.03.00 The cold water pipe shall be provided with an isolation valve at the outlet from the cooling tower. Required equipment handling facilities such as electrically operated monorail hoists for handling stop-logs and electro-mechanical equipments of cooling towers shall be provided.

1.04.00 Cooling tower basin should be sufficiently elevated so as to provide flooded suction to ACW pumps.

1.05.00 After installation at site, the complete systems/equipment will be operated at site to show satisfactory performance as required by the applicable clauses of the specification.

1.05.00 All electrical, civil and control and instrumentation systems related to Cooling Tower shall be in bidder's scope.

1.06.00 **COOLING TOWERS (FGD SYSTEM)**

i)	Type	:	Induced draft, cross or counter flow.
ii)	Casing & Sump tank	:	F.R.P/G.R.P/RCC
iii)	Fan	:	Cast Aluminum / FRP Propeller type and multi-blade aerofoil construction with adjustable pitch.
iv)	Fill	:	Non combustible PVC or equivalent
v)	Louvers	:	F.R.P. /PVC/ Aluminum.
vi)	Nozzles	:	Brass with chrome plating / Polypropylene.
vii)	Eliminators	:	In removable sections to reduce the drift loss to 0.2% of water flow.
viii)	Supporting structure	:	Mild steel with spray galvanization or epoxy painting.
ix)	Strainer at water outlet	:	Plate strainer made of GI/SS wire mesh of 16 gauge.
x)	Bird screen on top of tower	:	25 mm square made of GI/SS wire mesh of 16 gauge.

xi)	Distribution Pipe (if any)	: Galvanised MS pipe/PVC.
xii)	Accessories	a) Drain connection with isolation valve.
		b) Make up connection with ball – float valve, back up gate valve and a bypass with a gate valve for manual operation.
		c) Overflow connection.
		d) Equalizing connection to connect sump of all the towers wherever applicable.
		e) Access door in louvers/fan deck.
xiii)	Quantity of water to be cooled by Cooling tower(s) of each unit	Total ACW pump flow (working pumps only) flow of all units with 10 % margin.
xiv)	Design Range	Bidder to decide. To take care of temperature rise in the cooling system
xv)	Hot Water temperature at cooling tower inlet	Bidder to decide
xvi)	Design Cold water temperature at cooling tower outlet	Bidder to decide
xvii)	Re-circulation allowance	Minimum 0.4 degree C
xviii)	Design ambient wet bulb temperature (WBT)	28 deg C
xix)	Design inlet wet bulb temperature	Design Ambient WBT + Recirculation allowance in ^{0}C.
xx)	Design Ambient Relative Humidity	45 %
xxi)	Quality of water	Same as Auxiliary cooling Water
xxii)	Internal Diameter of pipes	To suit max. design velocity of 2.0 m/sec
xxiii)	Size of Branch & Cell isolation Butterfly Valves (if applicable)	Same as that of pipe size

SUB-SECTION-I-M6

PIPING

LOW PRESSURE PIPING

1.00.00 **EQUIPMENT SIZING CRITERIA**

1.01.00 All the piping systems and equipment supplied under this package shall be designed to operate without replacement and with normal maintenance for a plant service life of 30 years, and shall withstand the operating parameter fluctuations and cycling which can be normally expected during this period.

1.02.00 For all Low Pressure piping systems covered under this specification, sizing and system design shall be to the requirements of relevant codes and standard indicated. In addition to this, requirements of any statutory code as applicable shall also be taken into consideration.

1.03.00 Inside diameters of piping shall be calculated for the flow requirements of various systems. The velocities for calculating the inside diameters shall be limited to the following:

a) **Water Velocity**

		Water velocity in m/sec		
	Pipe Size	**Below 50 mm**	**50-100**	**200 & above**
(a)	Pump suction	------	1.2-1.5	1.2-1.8
(b)	Pump discharge and recirculation	1.2-1.8	1.8-2.4	2.1-2.5
(c)	Header	------	1.5-2.4	2.1-2.4

Pipe line under gravity flow shall be restricted to a flow velocity of 1 m/sec generally. Channels under gravity flow shall be sized for a maximum flow velocity of 0.6 m/sec.

WILLIAM & HAZEN formula shall be used for calculating the friction loss in piping systems with the following "C" value:

(i)	Carbon steel pipe	100
(ii)	Ductile Iron.	140
(iii)	Rubber lined steel pipe	120
(iv)	Stainless steel pipe	100

For calculating the required pump head for pump selection, at least 10% margin shall be taken over the pipe friction losses and static head shall be calculated from the minimum water level of the tank/ sump/ reservoir from which the pumps draw water.

(b) **Compressed Air Velocity**

Compressed air 15.0 m/sec.(under Average Pressure & Temp. conditions)

1.04.00 The pipes shall be sized for the worst (i.e. maximum flow, temp. and pressure values) operating conditions.

1.05.00 Based on the inside dia. so established, thickness calculation shall be made as per ANSI B 31.1 OD and thickness of pipes shall than be selected as per ANSI B 36.10/IS-1239 Heavy grade/IS-3589/ASTM-A-53/API-5L/ANSI B 36.19 as the case may be.

1.06.00 Corrosion allowance of 1.6 mm will be added to the calculated thickness being considered (except stainless steel piping).

1.07.00 Bend thinning allowance/manufacturing allowance etc. shall be as per the requirement of the design code provision.

1.08.00 High points in piping system shall be provided with vents along with valves as per the system requirement. Low points shall be provided with drains along with drain valves as per the system requirement. Drain lines shall be adequately sized so as to clear condensate in the lines. Material for drain and vent lines shall be compatible with that of the parent pipe material.

1.09.00 Material of construction for pipes carrying various fluids shall be as specified elsewhere.

1.10.00 Compressed air pipe work shall be adequately drained to prevent internal moisture accumulation and moisture traps shall be provided at strategic locations in the piping systems.

1.11.00 Depending upon the size and system pressure, joints in compressed air pipe work shall be screwed or flanged. The flange shall be welded with the parent pipe at shop and shall be hot dip galvanized before dispatch to site. Alternatively, the flanges on GI pipes may be screwed-on flanges also.

1.12.00 Threaded joints shall be provided with Teflon sealant tapes.

1.13.00 Following types of valves shall be used for the system/service indicated.

SYSTEM	**TYPES OF □AL□ES**					
	Butterfly	Gate	Globe	Check	Ball	Plug
Water	x	x	x	x	x	
Air		x	x	x	x	
Drains & vents		x	x	x		

1.14.0 Recirculation pipes along with valves, breakdown orifices etc. shall be provided for important pumping systems as indicated in respective process and instrumentation diagrams (P&IDs). The recirculation pipe shall be sized for minimum 30%design flow of single pump operation or the recommended flow of the pump manufacturer whichever is higher.

2.00.00	**TECHNICAL SPECIFICATION**
2.01.00	**GENERAL** Specific technical requirements of low-pressure piping, fittings, supports, valves, specialties and tanks etc. have been covered under this Sub-section. It includes details pertaining to design and material of construction for piping, fittings, valves, equipment, etc. cleaning/surface preparation application of primer and painting on over ground piping. It also includes detailed technical requirement of laying underground/buried piping including water proofing/anti corrosive protection. It also covers design, engineering, manufacturing, fabrication, technical details of piping, valves, specialties, piping hangers / supports, tanks etc.
2.02.00	**P□□□□ □□d □□□□□□□□**
2.02.01	All low pressure piping systems shall be capable of withstanding the maximum pressure in the corresponding lines at the relevant temperatures. However, the minimum thickness as specified in the following clauses and or respective codes for pipes and fittings shall be adhered to. The bidder shall furnish the pipe sizing/ thickness calculation as per the criteria mentioned above under LP piping equipment sizing criteria of this Technical Specification.
2.02.02	Piping and fittings coming under the purview of IBR shall be designed satisfying the requirements of IBR as a minimum.
2.02.03	Supporting arrangement of piping systems shall be properly designed for systems where hydraulic shocks and pressure surges may arise in the system during operation. Bidder should provide necessary protective arrangement like anchor blocks/anchor bolt etc. for the safeguard of the piping systems under above mentioned conditions. The requirement will be, however, worked out by the contractor and he will submit the detailed drawings for thrust/anchor block to the Employer. External, and internal, attachments to piping shall be designed so as not to cause flattening of pipes and excessive localized bending stresses.
2.02.04	Bends, loops, off sets, expansion or flexible joints shall be used as required in order to prevent overstressing the piping system and to provide adequate flexibility. Flexibility analysis (using software packages such as Caesar-II etc.) shall be carried out for sufficiently long piping (straight run more than 300M).
2.02.05	Wherever Bidder's piping coming under this specification, terminates at an equipments or terminal point not included in this specification, the reaction and the thermal movement imposed by bidder's piping on equipment terminal point shall be within limits to be approved by the Employer.
2.02.06	The hot lines shall be supported with flexible connections to permit axial and lateral movements. Flexibility analysis shall be carried out for pipelines which have considerable straight run as indicated above and necessary loops/ expansion joint etc. shall be provided as may be necessary depending on layout.
2.02.07	Piping and fittings shall be manufactured by an approved manufacturer of repute. They should be truly cylindrical of clear internal diameter, of uniform thickness, smooth and strong, free from dents, cracks and holes and other defects.
2.02.08	For rubber lined ERW pipes, beads shall be removed.
2.02.09	Inspection holes shall be provided at suitable locations for pipes 800 Nb and above as required for periodic observations and inspection purposes.

2.02.10 At all intersection joints, it is Contractor's responsibility to design and provide suitable reinforcements as per the applicable codes and standards.

2.02.11 For large size pipes/ducts, at high point and bends/change of direction of flow, air release valves shall be provided as dictated by the system requirement and operation philosophy & tripping conditions of pumping system. Sizing criteria for air release valves shall be generally on the basis of valve size to pipe diameter ratio of 1:8. Requirement shall be decided as per relevant code.

Transient analysis /surge analysis where ever specified and required shall be conducted in order to determine the location , number and size of the Air-Release valve on certain long distance/high volume piping systems, if applicable within the scope of work of the package.

2.03.00 **M□□□r□□□**

2.03.01 Alternate materials offered by Bidder against those specified. shall either be equal to or superior to those specified, The responsibility for establishing equality or superiority of the alternate materials offered rests entirely with the Bidder and any standard code required for establishing the same shall be in English language.

2.03.02 No extra credit would be given to offers containing materials superior to those specified. Likewise no extra credit would be given to offers containing pipe thickness more than specified.

2.03.03 All materials shall be new and procured directly from the manufacturers. Materials procured from traders or stockists are not acceptable.

2.03.04 All materials shall be certified by proper material test certificates. All material test certificates shall carry proper heat number or other acceptable references to enable identification of the certificate that certifies the material.

2.03.05 Material of construction for pipes carrying various fluids shall be as follows:

S□N	T□□□ □□F□□d	M□□□r□□□
1.	i) Ordinary Water (Raw Water, Clarified Water, etc.) ii) Equipment cooling water including Both primary & secondary circuit (DMCW pH-corrected & ACW drain water)	IS-2062 Gr.-E-250B/ASTM A-36/ASTM A-53 type 'E'Gr.B/IS-3589 Gr. 410 /IS-1239 Heavy.
2.	i) Demineralised water, ii)Alkaline solution (ECW system chemical dosing)	Stainless Steel to ASTM A312, Gr. 304 welded for sizes 65 mm NB and above. Stainless steel to ASTM A312, Gr. 304 sch.40s seamless for sizes 50mm and below
3.	i) Drinking (potable) water ii)Compressed air (Instrument & service air)	ASTM A-53 type E Gr. B galvanized/ IS 1239 Gr heavy galvanized/IS 3589 Gr 410 galvanized. Galvanized shall be to IS- 4736 or equivalent.

2.03.06 In water lines, pipes upto 150mm Nb shall conform to ANSI B36.10/ASTM-A-53, Type-E Gr.B /IS:1239 Gr. Heavy and minimum selected thickness shall not be less than IS:1239 Grade Heavy except for demineralised water, drinking water and condensate spill lines.

2.03.07	Pipes of above 150mm Nb shall be to AWWA-C200/ANSI B 36.10/ASTM A-53/IS 3589 Gr.410. Pipe to be fabricated by the bidder shall be rolled and butt welded from plates conforming to ASTM A-53 type 'E' Gr. B/IS 2062 Gr.E-250B/ASTM-A-36. However, larger pipes, i.e. 1000mm Nb and above shall be made from plates conforming to ASTM A 36/IS 2062 Gr.E-250B and shall meet the requirements of AWWA-M-11 (for deflection & buckling criteria considering water filled pipe as well as vacuum condition that may prevail during transient/surge conditions, truck-load, rail-load and weight density for compacted soil or any other load as the case may be).
2.03.08	In demineralised water service, the pipes upto 50 Nb shall be of stainless steel ASTM A 312, Gr. 304 sch. 40 Seamless. The size for these pipes shall be to ANSI B 36.19. These shall be socket welded. The material for pipe from 65mm NB upto and including 400 NB shall be to ASTM A 312, Gr. 304 (welded). In no case the thickness of fittings shall be less than parent pipe thickness. Bidder/Contractor shall note that pipes offered as per a particular code shall conform to that code in all respects i.e. Dimension, tolerances, manufacturing methods, material, heat treatment, testing requirements, etc. unless otherwise mentioned elsewhere in the specification.
2.03.09	Instrument air, Plant (service) air lines and Drinking water lines shall be to ASTM A 53 type E grade B/ANSI B 36. 10/IS 3589, Gr. 410 / IS: 1239 Heavy (in case thickness calculated is more than gr. Heavy, ANSI B 36.10 Schedule numbers shall be followed) and galvanized to IS 4736 or any equivalent internationally reputed standard. The material of the pipes shall be to ASTM A 53 type 'E' Gr. B / IS: 3589, Gr. 410 / IS: 1239 Gr. Heavy. The fittings shall be of either same as parent material or malleable iron to IS-1879 (galvanized).
2.03.10	Spiral welded pipes as per API-5L/IS-3589 are also acceptable for pipe of size above 150 NB. However minimum thickness of the pipes shall be as elaborated in above clauses.
2.03.11	Condensate lines shall be to ASTM A 106 Gr. B and dimension to ANSI B 36.10 schedule "standard" as minimum to be maintained.
2.03.12	If carbon steel plates of thickness more than 12 mm are used for manufacture of pipes, fittings and other appurtenances, then the same shall be control-cooled or normalized as the case may be following the guidelines of the governing code.
2.04.00	**F□□d r□□□□d □□□□:**
2.04.01	Pipe lines of NB 50 size and below are regarded as field run piping. It is Bidder's responsibility to plan suitable layouts for these system insitu. Bidder shall prepare drawings indicating the layout of field run pipe work. These drawings shall be approved by Project Manager to the installation of the field run pipe work. Based on these approved layouts the Bidder shall prepare the BOQ of field run-pipes and submit to Employer for approval.
2.05.00	**S□□□□Dr□□□□ □□d □□□□**
2.05.01	Suitable slope shall be provided for all pipelines towards drain points. It is Bidder responsibility to identify the requirements of drains and vents, and supply the necessary pipe work, valves, fittings, hangers and supports etc. As per the system requirement low points in the pipelines shall be provided with suitable draining arrangement and high points shall be provided with vent connections where air or gas pockets may occur. Vent for use during hydrostatic test shall be plugged after the completion of the test. Vent shall not be less than 15mm size. Drains shall be provided at low points and at pockets in piping such that complete drainage of all systems is possible. Drain shall not be less than 15mm for line size up to 150mm, not less than 20mm up to 300mm and not less than 25mm for 350mm to 600mm pipes and not less than 50mm for 600mm and above pipes.

2.05.02 Air piping shall be sloped so that any part of the system can be drained through the shut-off drain valve or drain plugs.

2.06.00 **P□□□ □□□□□□**

In general all water lines 65mm NB and above, are to be joined generally by butt welding except the locations where valves/fittings are to be installed with flanged connections and 50mm and below by socket welding unless mentioned otherwise specifically. All air lines shall be of screwed connection and rubber lined pipes of flanged connections.

2.06.01 **S□r□□ □d □□□□□**

(a) Threading of pipes shall be carried out after bending, heat treatment etc. If not possible, threading may be done prior to these operations but proper care should be taken to protect them from damage. Threads shall be to ANSI B 2.1 (taper) NPT/IS: 554 unless specified otherwise.

(b) Galvanized pipe shall generally be joined by screwing into sockets. The exposed threaded portion on the outside of the pipes shall be given a zinc silicate coating. Galvanized pipes shall not be field joined by welding for protection of Galvanising Zinc layer. Screwed ends of GI pipes shall be thoroughly cleaned and painted with a mixture of red and white lead before jointing. For galvanized pipe sizes above 150 mm NB, screw & socket jointing as per ASTM-A-865 shall be employed for both pipe-to-pipe and pipe-to-fitting jointing. For pipe to fitting connection since no direct threading can be done on the fittings (supplied as per ASTM-A-234 Gr. WPB and ANSI B-16.9) necessary straight pipe lengths acting as match pieces shall be welded to the fitting at both ends and subsequently the free ends of the straight lengths shall be threaded as per ASTM A-865 for jointing with main pipe. Once welding of fittings with match pieces and threading of free ends of match pieces are over, the entire fabricated piece shall be galvanized, or in case match pipes and fittings are already galvanized before the above mentioned fabrication then suitable application of Zinc-Silicate paste adequately at the welded surface (both in side & out side) after welding with zinc rich electrode, along with the nascent threaded metal portions at both free ends given the same application of Zinc Silicate paste. Alternatively flanged jointing may be employed for pipe sizes 100 NB and above. However, the bidder shall ensure the galvanized pipe joints do not fail during hydro test.

(c) Teflon tapes shall be used to seal out screwed joints and shall be applied to the male threads only. Threaded parts shall be wiped clean of oil or grease with appropriate solvent if necessary and allowing proper time for drying before applying the sealant. Pipe ends shall be reamed and all chips shall be removed. Screwed flanges shall be attached by screwing the pipe through the flange and the pipe and flange shall be refaced accurately.

(d) For pipe sizes from 350 mm NB to 550 mm NB (including 350 NB & 550 NB) the GI pipes shall be of flanged connection. However, the pipes after welding of flanges shall be completely galvanized. Any site welding done on galvanized pipes shall be done with zinc-rich special electrodes and the welded surfaces whether inside or outside shall be coated with zinc-silicate paste. Seal welding of flanges with zinc-rich electrode will be permitted only when any flange is leak-prone during hydro testing.

(e) For pipe sizes 600 mm NB and above, the GI pipes shall be of welded connection (with zinc-rich special electrodes) followed by application of zinc silicate coating at welded surfaces both inside and outside the pipe, except for the last blank/blind flange, or, equipment connection where application of zinc-silicate paste after welding cannot be done due to inaccessibility of the inside welded surface and where galvanic protection has been impaired due to welding of pipe-to-pipe joint. Thus the last erection joint shall be flanged joint.

2.06.02 **W□□d□d □□□□□**

(a) For making up welded joints (butt weld or socket weld) the welding shall be performed by manual shielded metal arc process in accordance with the requirements specified elsewhere in the spec. Any welder employed for carrying butt welding shall be qualified as per ASME section IX for the type of joints he is going to weld. Jointing by butt weld, or socket weld shall depend upon the respective piping material specifications.

2.06.03 **F□□□□□d □□□□□**

(a) Flanged connections for pipes are to be kept to the minimum and used only for connections to vessel, equipments, flanged valves and other fittings like strainer/traps/orifices etc. for ease of connection and maintenance etc. Rubber lined pipes shall be flange joined only.

(b) All flanged valves intended for installation on steel piping system, shall have their flanges drilled to ANSI B 16.5 (or equivalent) and according to the pressure class stated in their respective piping material specification.

(c) Drilling on flanges of flanged valves must correspond to the drilling of flanges on the piping system on which the valves are installed.

2.07.00 **B□□d□□□□□□□ □□□ □r□ □□□d□□T□□□□R□d□□□r□ □ □□□□r □□□□□□□**

2.07.01 For pipe fittings such as elbows (long radius), reducers, tees, etc. the material shall be to ASTM-A-234 Gr. WPB/ASTM-105 up to 300 NB. For pipe fittings above 300 NB, the fittings may be fabricated conforming to parent pipe material. Provision of compensation pads shall be kept as per ANSI B 31.1. The fitting shall conform to the dimensional standard of ANSI B-16.9/ 16.11.Further branching in pipes for sizes 65nb and above is also acceptable (ANSI B 31.1).

However, for pipes up to 150 NB, pipe fittings may be supplied with material and dimension conforming to IS 1239 in case parent pipes also conform to IS 1239.

2.07.02 For pipe size 350Nb and above mitre bends may be used for all pipes except rubber lined pipes. The bend radius shall be 1½ times the nominal pipe diameter. 90 deg. bends (mitre) shall be in 4 pieces (3 cuts) and 45 deg. mitre bends shall be in 3 pieces 22½ deg. Fabrication of mitre bends shall be as detailed in BS 2633/BS534.

2.07.03 For pipes, above 1200 NB, reducer and tees shall be to dimensional standard of AWWA-C-208.

2.07.04 Stainless steel fittings shall conform to either ASTM-A-182 Gr. 304 or ASTM-A-403 Grade WP. 304 Class-S, for sizes upto and including 50 mm NB, i.e. the fittings shall be of seamless construction. However, for stainless fittings above 50 mm NB, the same shall conform to ASTM-A-403 Gr. WP 304 Class W i.e. the fittings shall be of welded construction strictly in accordance with ASTM-A-403.

2.07.07 In no case, the thickness of fittings shall be less than the thickness of parent pipe, irrespective of material of construction.

2.08.00 **F□□□□□□**

2.08.01 Flanges shall be slip on type. Welding of flanges in tension is not permitted.,

2.08.02 All flanges and-flanged drilling shall be to ANSI B 16.5/BS EN-1092 of relevant pressure/temperature class. Flanges shall be fabricated from steel plates conforming to ASTM A 105/IS 2062 Gr. E-250B. However stainless steel flanges shall be fabricated from SS plates to ASTM-A-240, Gr. 304 or equivalent.

2.09.00 **S□□□□□□□ □□□□□□□□r□□□□r□□ □□□□□□□□□□□ □□r□□d □□□□ □ □□□ □□□□□□□rr□□□□□ □r□□□□ □□□**

The pipe in general shall be laid with the top of the pipe minimum 1.0 (one) meter below finished general ground level.

2.09.01 **Tr□□□□□□□**

(a) The trench shall be cut true to the line and level and shall follow the gradient of the pipeline. The width of the trench shall be sufficient to give free working space on each side of the pipe. Trenches shall conform to IS 5822 or any international standard.

2.09.02 **Pr□□□r□□□□□ □□d □□□□□□□□ □□□□□□□□**

(a) The pipeline shall be thoroughly cleaned of all rust, grease, dirt, weld scales and weld burrs etc. moisture or other foreign matter by power cleaning method such as sand or grit blasting, power tool cleaning, etc. Grease or heavy oil shall be removed by washing with a volatile solvent such as gasoline. Certain inaccessible portions of the pipeline (which otherwise not possible to be cleaned by power cleaning methods) may be scrubbed manually with a stiff wire brush and scrapped where necessary with specific permission of the Project Manager.

(b) On the internal surface for pipes 1000 Nb and above, a coat of primer followed by a hot coal-tar enamel or coal tar epoxy painting (cold) shall be applied.

2.09.03 **C□□□□□□ □□d □r□□□□□□A□□□□□rr□□□□□ Pr□□□□□□□□ C□□□□r □□□□**

a. Buried piping shall be coated and wrapped, as per specification, after completion of welded and/or flanged connections, and after completion and approval of Hydro testing. Materials to be used for coating and wrapping of underground pipelines are:

(1) Coating primer (coal tar primer)

(2) Coating enamel (coal tar enamel)

(3) Wrapping materials.

All primer/coating/wrapping materials and methods of application shall conform to IS: 10221 except asphalt/bitumen material. Materials (primer/coating/wrapping) as per AWWA-C-203 are also acceptable.

Protective coating shall consist of coal tar primer, coal tar enamel coating, glass fiber, tissue inner wrap followed by glass fiber or coal tar impregnated Kraft outer wrap or finish coat.
Number of coats and wraps, minimum thickness for each layer of application shall be as per IS-10221. Number of. Coats and wraps shall be decided based on soil corrosivity/resistivity as indicated in IS-10221. Soil data-for this purpose shall be made available.

Total thickness of completed coating and wrapping shall not be less than 4.0 mm.

b. Alternatively, the anti-corrosive protection for buried pipes can consist of anti-corrosive protection Coal-tar tapes. Material and application of tapes shall conform to IS 15337 or equivalent. These-tapes shall be applied hot over the cold coal tar primer in steps of 2mm thickness so as to cover the spiral edges of the first tape by the application of second tape. The total nominal thickness of the finished protective coating shall be 4.0 mm.

2.09.04 **Tr□□□□ □□d □r□□□r□□□□ □□d □□□□ □□□□□**

Prior to lowering and laying pipe in any excavated trench, the bottom of the trench may require to be back filled and compacted (or as the case may be) to provide an acceptable bed for placing the pipe. Bed preparation in general shall be as per IS: 5822.

2.09.05 **□□□□□ □□□□□□□□□□d □□□□□ (GI) □□□□**

All the joints shall be screwed with socket or flanged. Screwed ends of GI pipes shall be thoroughly cleaned and painted with a mixture of red and white lead before jointing Threaded portion on either side of the socket joint shall be applied with Zinc silicate paste.

All the provisions for trenching' bed preparation' laying the pipe application of primer' coating' wrapping with tapes and back filling etc. as indicated for "laying of buried piping" and " anti corrosive protection for buried piping" are applicable for buried galvanized steel (GI) pipes also.

2.10.00 **C□□□□□□ □□d □□□□□□**

2.10.01 All piping shall be cleaned by the Bidder before and after erection to remove grease, dirt, dust, scale and welding slag.

2.10.02 Before erection all pipe work, assemblies, sub-assemblies, fittings, and components, etc. shall be thoroughly cleaned internally and externally by blast cleaning or by power driven wire brushes and followed by air-blowing . However for pipe sizes below 100nb the pipes may be cleaned internally by compressed air blowing as an alternative to internal blast cleaning. The brushes shall be of the same or similar material as the metal being cleaned. Cleaning of Galvanized pipes shall be done by air blowing only.

2.10.03 After erection, all water lines shall be mass flushed with water. The cleaning velocities in water lines shall be 1.2-1.5 times the operating velocities in the pipelines.

2.10.04 All compressed air pipe work shall be cleaned by blowing compressed air.

2.11.00 **S□□□□□□□□□□□ □r □□□□r□ □d □□□□r□**

2.11.01 All supports and parts shall conform to the requirement of power piping code ANSI B 31.1 or approved equivalent.

2.11.02 The maximum spans of the supports of straight length shall not exceed the recommended values indicated in ANSI B 31.1.

2.11.03 At all sliding surfaces of supports suitable arrangement is to be provided to minimize sliding friction.

2.12.00 **D□□□□□C□□□r□□□□□M□□r□P□r□□□□r□ □G□□□G□□ C□□□ B□□r□ B□□ Arr□□□□ F□□□□□□□ M□□r Tr□□.**

2.12.01 **GENERAL**

(a) All valves shall have indicators or direction clearly marked on the hand-wheel so that the valves opening/closing can be readily determined.

(b) Special attention shall be given to operating mechanism for large size valves with a view to obtaining quick and easy operation ensuring that a minimum of maintenance is required.

(c) The valves coming in vacuum lines shall be of extended gland type and/or water sealed.

(d) The actuator-operated valves shall be designed on the basis of the following:

(1) The internal parts shall be suitable to support the pressure caused by the actuators;

(2) The valve-actuator unit shall be suitably stiff so as not to cause vibrations, misalignments, etc.

(3) All actuator-operated valves shall be provided with hand operated gearing mechanism also.

(4) All actuators operated valves shall open/ close fully within time required by the process.

(e) Valves coming under the purview of IBR shall meet IBR requirements.

(f) All valves shall be provided with embossed name plate giving details such as tag number, type, size etc.

(g) Wherever required valves shall be provided with chain operator, extension spindles and floor stands or any other arrangement approved by employer so that they can be operated with ease from the nearest operating floor. Wherever necessary for safety purpose locking device shall be provided. Further, necessary small platforms for facilitating easy valve operation shall be provided by the contractor wherever necessary in consultation with project manager within the bid price at no extra cost to employer

2.12.02 **□AL□E BODY MATERIAL**

Valve body material for various services shall be as follows:

Valve body material for water application like Secondary circuit auxiliary cooling water of ECW system, Raw water, Ash water make-up, service water, clarified water, DM cooling water (pH corrected) , drinking water etc. shall be cast iron for sizes 65NB and above; gun-metal for sizes 50 Nb and below.

For compressed air application, valve body material shall be cast carbon steel or forged carbon steel for sizes 65 mm NB & above and Gun metal for sizes 50 NB and below.

DM water: SS body and disc along with SS internals. However for butterfly valves, Cast Iron /Ductile Iron/SG iron/carbon steel body and disc with elastomer lining are also acceptable.

Condensate: Cast Carbon Steel / Forged Carbon Steel.

2.12.03 The design, material, construction, manufacture, inspection, testing and performance of valves shall comply with all currently applicable statutes, regulations and safety codes in the locality where the valves will be installed. The valves shall conform to the latest editions of applicable codes and standards as mentioned elsewhere. Nothing in this specification shall be construed to relieve the Bidder of his responsibility. Valves in general shall conform to the requirements of the following standards.

S□□□d□rd□ □□d C□d□□

AWWA-C-504	Rubber seated butterfly valves.
BS-5155/EN-593	Cast iron and steel body butterfly valves for general purpose.
IS-778	Gun-metal gate, globe and check valves for general purpose.
BS-5154	Copper alloy globe/globe stop and check and gate valves for general purpose.
IS-780	Sluice valves for water works purpose (50-300 mm size)
IS-2906	Sluice valves for water works purpose (350-1200 mm size)
IS-5150	Cast iron wedge and double disc gate for general purpose.
BS-5152	Specification for cast iron globe valves.
BS-5153	Cast iron check valves for general purpose.
IS-5312	Swing check type reflux (non-return) valves.
ANSI B 16.34	Standard for valves.
API-594	Standard for Dual-check valves.
API-600	Steel gate valves.
ANSI-B-16.10	Valves face to face and other relevant dimension.
API-598	Valves inspection test.

2.12.04 **E□d C□□□□□□□□□□□**

The end connections, shall comply with the following:

Socket welding (SW) - ANSI B 16.11

Butt Welding (BW) - ANSI B 16.25.

Threaded (SC) - ANSI B 2.1

Flanged (FL) - ANSI B 16.5& AWWA-C-207 (steel flanges), ANSI B 16.1 (Cast Iron flanges).

2.13.00 **G□□□G□□□□C□□□□ □□□□□□**

(a) All cast iron body valves (gate, globe and non-return) shall have flanged end connections; (screwed ends for Ductile D.2NI body valves are not acceptable).

(b) All steel and stainless steel body valves of sizes 65 mm and above shall have flanged or butt welding ends. Valves of sizes below 65mm shall have flanged or socket welded ends. Compatibility of welding between valve body material and connecting pipe material is a pre-requisite in case of butt-welded joints.

(c) All gun metal body valves shall have screwed ends.

(d) All flanged end valves/specialties. shall be furnished along with matching counter flanges, fasteners, gaskets etc. as required to complete the joints.

(e) Gate/sluice valves shall be used for isolation of flow. All gate valves shall be of the full-way type, and when in the full open position the bore of the valve shall not be constricted by any part of the gate.

Gate valves shall be of the solid/elastic or articulated wedge disc. Gate valves shall be provided with the following accessories in addition to other standard items:

(1) Hand wheel

(2) Position indicator (for above 50 mm NB valve size)

(3) Draining arrangement wherever required.

(f) Globe valves shall be used for regulation purposes. They shall be provided with hand wheel, position indicator, draining arrangement (wherever required) and arrow indicating flow direction. Preferably, the valves shall be of the vertical stem type. Globe valves shall preferably have radiused or spherical seating and discs shall be free to revolve on the spindle.

The pressure shall preferably be under the disc of the valve. However, globe valves, with pressure over the disc shall also be accepted provided (i) no possibility exists that flow from above the disc can remove either the disc from stem or component from disc (ii) manual globe valves can easily be operated by hand. If the fluid load on the top of the disc is higher than 40-60 KN, bypass valve shall be provided which permits the downstream system to be pressurized before the globe valve is opened.

(g) Check valves shall be used for non-return service. They shall be swing. check type or double door (Dual plate)check type with a permanent arrow inscription on the valve body indicating the fluid flow direction. In long distance pipes lines with possibility of surge-occurrence, dual plate check valves are preferable for its spring controlled opening /closing of flaps/doors against flow reversals. However, dual plate check valves shall not be used for sizes more than 600mm NB.

(h) For bore greater than 2" the valves must be swing check type or dual plate check type suitable for installation in all positions (vertical and horizontal);

(i) For bore smaller than or equal to 2" the valves must be of the piston type to be installed, in horizontal position.

(j) All gate and globe valves shall be provided with back seating arrangement to enable on line changing of gland packing. The valves shall be preferably outside screw & yoke type.

(k) All gate and globe valves shall be rising stem type and shall have limit switches for full OPEN and full CLOSED indication wherever required. This will include motor-operated valves also wherever required. In such cases the limit switches shall form an integral part of the valve. Stop-gap arrangement in this respect is not acceptable.

(l) All valves except those with rising stems shall be provided with continuous mechanical position indicators; rising stem valves shall have only visual indication through plastic/metallic stem cover for sizes above 50 mm nominal bore.

(m) For CI gate, globe and check valves wherever thickness of body/bonnet is not mentioned in the valves standards, thickness mentioned in IS- 1538 for fitting shall be applicable.

2.13.01 **MATERIAL OF CONSTRUCTION (GATE□GLOBE□CHECK □AL□E)**

(a) The materials shall generally comply with the following:

(1) **C**ast **S**teel Valves

Body & bonnet	ASTM A 216 Gr. WCB/ ASTM A 105
Disc for non-return Valves	ASTM A 216 Gr. WCB/ ASTM A 105
Trim.	ASTM A 182 Gr. F6 or Equivalent

(2) **S**□ainless steel valves

Body & Bonnet	SS 304
Disc	-do-
Trim.	SS 316

(3) **C**ast □r□□ valves

Body & bonnet	BS 1452 Gr. 14/ IS-210 Gr. FG 260
Seating surfaces and rings	13% chromium steel/ 13% Chrome overlay
Disc for non-return valves	BS 1452 Gr. 14/IS-210 Gr FG 260
Hinge pin for non-return valves	AISI 316
Stem for gate globe valves	13% chromium steel or Equivalent
Back seat	13 % chromium steel / 13% Chrome overlay

(4) **G□□ M□□□□□□□□□□**

Body and bonnet	IS 318 Gr. 2/ Equivalent Standard
Trim.	-do-

(b) Cast iron body valves shall have high alloy steel stem and seat.

(c) Material for counter flanges shall be the same as for the piping.

(d) Forged carbon steel valves are also acceptable in place of Gun metal valves.

2.14.00 **Air Release Valves**

(a) The air release valves shall be of automatic double air valve with two orifices and two floats. The float shall not close the valve at higher air velocities. The orifice contact joint with the float shall be leak tight joint.

(b) The valve shall efficiently discharge the displaced air automatically from ducts/pipes while filling them and admit air automatically into the ducts/pipes while they are being emptied. The valve shall also automatically release trapped air from ducts/pipes during operation at the normal working pressure.

(c) Body material of automatic air release valves shall comply generally with BS 1452 Gr. 14/IS: 210 Gr. FG 260. and spindle shall conform to high tensile brass.

(d) Air release valves shall not have any integral isolation device within them. Each Air release valve shall be mounted, preceded by a separate isolation gate/ butterfly valve.

2.15.00 **Butterfly Valves**

2.15.01 **Double Flanged Cast Iron Butterfly Valves**

(a) The valves shall be designed for the design pressure/temperature of the system on which it is installed and in accordance with AWWA-C-504, EN-593 or any other approved equivalent standard latest edition. Fabricated steel (IS: 2062 GR. E-250B) butterfly valves instead of cast iron body valves are also acceptable for size above 300 mm nb diameter.

(b) The valves shall be suitable for installation in any position (horizontal/vertical etc.) and shall be generally of double-flanged construction. However for sizes 600 NB and below the valves of Wafer construction are also acceptable

(c) Valves-350Nb and above shall have pressure equalizing bypass valves, wherever system parameters warrant the same.

(d) Valves-200Nb and above shall also be provided with gear operator arrangement as a standard practice suitable for manual operation. Manual operation of valve shall be through gear arrangement having totally enclosed gearing with hand wheel diameter and gear ratio designed to meet the required operating torque It shall be designed to hold the valve disc in intermediate position between full open and full closed position without creeping or fluttering. Adjustable stops shall be provided to prevent over travel in either direction.

Limit and torque switches (if applicable) shall be enclosed in water tight enclosures along with suitable space heaters for motor actuated valves, which may be either for On-Off operation or inching operation with position transmitter.

2.15.02 **Material of Construction (Butterfly Valves)**

Materials and other design details shall be as indicated below :

(a) **Cast Iron Butterfly Valves**

Body & Disc	ASTM A48, Gr. 40 with 2% Ni / IS: 210. Gr. FG-260, with 2% Ni / SG iron BSEN 1563, Gr EN GJS-400-15 with 2%Ni and epoxy coated

	Shaft	BS 970 431 S: 291 / EN 57, or AISI-410 or AWWA-permitted shaft material equivalent to EN-57/AISI-410 or better.
	Seat ring	18-8 Stainless steel
	Seal	Nitrile Rubber

(b) **S□□□□□□□□ S□□□□ B□□□r□□□ □□□□□□**

Body & Disc	SS 304
Shaft	SS 316
Seat Rings	EPT/BUNA-N/Neoprene

(c) **C□r□□□ □□□□□B□□□r□□□ □□□□□□**

Body & Disc	ASTM A 216, Gr. WCB
Shaft	SS 304
Disc & Seat Rings	EPT/BUNA-N/Neoprene

(d) **E□□□□□ □r □□□d B□□□r□□□ □□□□□□**

Body & Disc	ASTM A48, Gr. 40 / IS: 210. Gr. FG-260 / SG Iron (ductile iron) IS 1865 Gr 400-15 or BSEN 1563, Gr EN GJS-400-15 / ASTM A 216, Gr. WCB with elastomer lining.
Shaft	SS 316

2.15.03 **Pr□□□□□D□□□□ T□□□(T□□□ T□□□) □r B□□□r□□□ □□□□□□**

Proof of Design (P.O.D.) test certificates shall be furnished by the bidder for all applicable size-ranges and classes of Butterfly valves supplied by him, in the absence of which actual P.O.D. test shall be conducted by the bidder.

All valves that are designed and manufactured as per AWWA-C-504 / AWWA-C-516 shall be governed by the relevant clauses of P.O.D test in AWWA-C-504/AWWA-C-516. For Butterfly valves, designed and manufactured to EN-593 or equivalent, the P.O.D. test methods and procedures shall generally follow the guidelines of AWWA-C-504 in all respect except that Body & seat hydro test and disc-strength test shall be conducted at the pressures specified in EN-593 or the applicable code. Actuators shall also meet requirements of P.O.D. test of AWWA-C-504/AWWA-C-516.

2.16.00 **F□□□□□□r□□d □□□□□**

(a) Valve shall automatically control the rate of filling and will shut off when a predetermined level is reached and close to prevent over flow on pre-set maximum water level. Valve shall also open and close in direct proportion to rise or fall of water level.

(b) DESIGN AND CONSTRUCTION FEATURES

The following design and construction feature of the valve shall be the minimum acceptable.

(c) Valves shall be right-angled or globe pattern.

(d) Valves shall be balance piston type with float ball.

(e) Leather liner shall not be provided.

(f) The body and cover material shall be cast iron conforming to ASTM-A 126 Grade 'B' or IS: 210 Grade 200 or equivalent, and Float shall be of copper with epoxy painting of two (2) coats.

(g) Valves shall be suitable for flow velocities of 2 to 2.5m/sec.

(h) The valves shall have flanged connections.

SUB-SECTION-I-M7

MDL

S. No.	NTPC_DRG_NO	Rev_drg_no_for_inouhse_drg	TO_BE_SHIFTED_TO_PACKAGE	DRG_TITLE	PROJECT_SPECIFC_INFORMATION	DRG_PURPOSE	DRG_TYPE	AREA	MILESTONE	CUSTODIAN	REVIEWERS	SUB_FROM_MP_AWARD	SUB_FROM_FGD_AWARD
1	0000-109-PVC-B-001			GA & RCC Detail of Foundation of Reagent Feed Tank		A	D	FGD	MISCELLANEOUS	PE-Civil	PE-Mech/Layout,PE-Mech/SG,PE-Mech/SG,	290	140
2	0000-109-PVC-B-002			GA & RCC Detail of Foundation of Secondary HC Feed Tank		A	D	FGD	MISCELLANEOUS	PE-Civil	PE-Mech/Layout,PE-Mech/SG,PE-Mech/SG,	255	105
3	0000-109-PVC-B-003			GA & RCC Detail of Foundation of Filtrate water Tank		A	D	FGD	MISCELLANEOUS	PE-Civil	PE-Mech/Layout,PE-Mech/SG,PE-Mech/SG,	283	133
4	0000-109-PVC-B-004			GA & RCC Detailof Foundation of Waste water Tank		A	D	FGD	MISCELLANEOUS	PE-Civil	PE-Mech/Layout,PE-Mech/SG,PE-Mech/SG,	290	140
5	0000-109-PVC-B-005			GA & RCC Detail of Foundation of Auxilliary Storage Tank		A	D	FGD	MISCELLANEOUS	PE-Civil	PE-Mech/Layout,PE-Mech/SG,PE-Mech/SG,	290	140
6	0000-109-PVC-B-006			GA & RCC Detail of Foundation of Process Water Tank		A	D	FGD	MISCELLANEOUS	PE-Civil	PE-Mech/Layout,PE-Mech/SG,PE-Mech/SG,	283	133
7	0000-109-PVC-B-010			GGH-Layout of Piles (If applicable) - GA OF FOUNDATION & COLUMN FOR GGH SUPPORT STRUCTURE		A	D	FGD	MISCELLANEOUS	PE-Civil	PE-Mech/Layout,PE-Mech/SG,PE-Mech/SG,	292	142
8	0000-109-PVC-B-011			GGH - Foundation/Pilecap & Pedestal - R/F DETAILS FOR GGH SUPPORT STRUCTURE		A	D	FGD	MISCELLANEOUS	PE-Civil	PE-Mech/Layout,PE-Mech/SG,PE-Mech/SG,	292	142
9	0000-109-PVC-B-014			Pipe Rack structure- GA & RCC detail of Foundation		A	D	FGD	MISCELLANEOUS	PE-Civil	PE-Mech/Layout,PE-Mech/SG,PE-Mech/SG,PE-Civil,	302	152
10	0000-109-PVC-B-016			GA of Foundation of Electrical equipments & control Building		A	D	FGD	MISCELLANEOUS	PE-Civil	PE-Electrical,PE-C&I,PE-C&I,PE-Mech/Layout,PE-Mech/SG,PE-Mech/SG,	322	172
11	0000-109-PVC-B-017			RCC Detail of Foundation of Electrical equipments & control Building		A	D	FGD	MISCELLANEOUS	PE-Civil	PE-Electrical,PE-C&I,PE-C&I,PE-Mech/SG,PE-Mech/SG,	322	172
12	0000-109-PVC-B-018			GA & RCC Detail of Superstructure of Electrical equipments & control Building - SHEET-1 - DETAILS OF GRADE BEAMS		A	D	FGD	MISCELLANEOUS	PE-Civil	PE-Electrical,PE-C&I,PE-C&I,PE-Civil,PE-Mech/Layout,PE-Mech/SG,PE-Mech/SG,	322	172
13	0000-109-PVC-B-018-SHT-2			GA & RCC Detail of Superstructure of Electrical equipments & control Building - SHEET-2 - DETAILS OF LINTEN BEAMS		A	D	FGD	MISCELLANEOUS	PE-Civil	PE-Electrical,PE-C&I,PE-C&I,PE-Civil,PE-Mech/Layout,PE-Mech/SG,PE-Mech/SG,	322	172
14	0000-109-PVC-B-018-SHT-3			GA & RCC Detail of Superstructure of Electrical equipments & control Building - SHEET-3 - DETAILS OF FLOOR BEAMS & SLABS		A	D	FGD	MISCELLANEOUS	PE-Civil	PE-Electrical,PE-C&I,PE-C&I,PE-Civil,PE-Mech/Layout,PE-Mech/SG,PE-Mech/SG,	322	172
15	0000-109-PVC-B-018-SHT-4			GA & RCC Detail of Superstructure of Electrical equipments & control Building - SHEET-4 - DETAILS OF FROOF BEAMS & SLABS AT RL (+) 295.250 (TOC)		A	D	FGD	MISCELLANEOUS	PE-Civil	PE-Electrical,PE-C&I,PE-C&I,PE-Civil,PE-Mech/Layout,PE-Mech/SG,PE-Mech/SG,	322	172
16	0000-109-PVC-B-018-SHT-5			GA & RCC Detail of Superstructure of Electrical equipments & control Building - SHEET-5 - DETAILS OF GRADE SLAB AT RL (+) 285.800 (TOC)		A	D	FGD	MISCELLANEOUS	PE-Civil	PE-Electrical,PE-C&I,PE-C&I,PE-Civil,PE-Mech/Layout,PE-Mech/SG,PE-Mech/SG,	322	172
17	0000-109-PVC-B-018-SHT-6			GA & RCC Detail of Superstructure of Electrical equipments & control Building - SHEET-6 - DETAILS OF STAIR CASES & ITS BEAM UPTO ROOF		A	D	FGD	MISCELLANEOUS	PE-Civil	PE-Electrical,PE-C&I,PE-C&I,PE-Civil,PE-Mech/Layout,PE-Mech/SG,PE-Mech/SG,	322	172
18	0000-109-PVC-B-018-SHT-7			GA & RCC Detail of Superstructure of Electrical equipments & control Building - SHEET-7 - DETAILS OF COLUMNS		A	D	FGD	MISCELLANEOUS	PE-Civil	PE-Electrical,PE-C&I,PE-C&I,PE-Civil,PE-Mech/Layout,PE-Mech/SG,PE-Mech/SG,	322	172

S. No.	NTPC_DRG_NO	Rev_drg_no_for_inouhse_drg	TO_BE_SHIFTED_TO_PACKAGE	DRG_TITLE	PROJECT_SPECIFC_INFORMATION	DRG_PURPOSE	DRG_TYPE	AREA	MILESTONE	CUSTODIAN	REVIEWERS	SUB_FROM_MP_AWARD	SUB_FROM_FGD_AWARD
19	0000-109-PVC-B-019			Architectural dwg of Electrical equipments & control Building		A	D	FGD	MISCELLANEOUS	Architecture	PE-Civil,PE-Civil,PE-C&I,PE-C&I,PE-Electrical,PE-Mech/Layout,PE-Mech/SG,	292	142
20	0000-109-PVC-B-020			GA of Foundation of Gypsum Dewatering Building		A	D	FGD	MISCELLANEOUS	PE-Civil	PE-Civil,PE-Mech/Layout,PE-Mech/SG,PE-Mech/SG,	322	172
21	0000-109-PVC-B-021			RCC Detail of Foundation of Gypsum Dewatering Building		A	D	FGD	MISCELLANEOUS	PE-Civil	PE-Civil,	322	172
22	0000-109-PVC-B-022-SHT-1			GA & RCC Detail of Superstructure of Gypsum Dewatering Building : GA & RC Details of Grade Beams		A	D	FGD	MISCELLANEOUS	PE-Civil	PE-Civil,PE-Mech/SG,PE-Mech/SG,PE-Mech/Layout,PE-Electrical,	322	172
23	0000-109-PVC-B-022-SHT-10			GA & RCC Detail of Superstructure of Gypsum Dewatering Building - GA & RC Details of Lintel Beams at RL 311.2 m (BOC)		A	D	FGD	MISCELLANEOUS	PE-Civil	PE-Civil,PE-Mech/SG,PE-Mech/Layout,	322	172
24	0000-109-PVC-B-022-SHT-2			GA & RCC Detail of Superstructure of Gypsum Dewatering Building : RC Details of Columns above Ground Level		A	D	FGD	MISCELLANEOUS	PE-Civil	PE-Civil,PE-Mech/SG,PE-Mech/SG,PE-Mech/Layout,	322	172
25	0000-109-PVC-B-022-SHT-3			GA & RCC Detail of Superstructure of Gypsum Dewatering Building : GA & RC Details of Floor Beams & Slab at RL. 292.8 m & RL. 296.65 m		A	D	FGD	MISCELLANEOUS	PE-Civil	PE-Civil,PE-Mech/SG,PE-Mech/SG,PE-Mech/Layout,	322	172
26	0000-109-PVC-B-022-SHT-4			GA & RCC Detail of Superstructure of Gypsum Dewatering Building : GA & RC Details of Floor Beams & Slab at RL. 300.65 m		A	D	FGD	MISCELLANEOUS	PE-Civil	PE-Civil,PE-Mech/SG,PE-Mech/SG,PE-Mech/Layout,	322	172
27	0000-109-PVC-B-022-SHT-5			GA & RCC Detail of Superstructure of Gypsum Dewatering Building : GA & RC Details of Grade Slab		A	D	FGD	MISCELLANEOUS	PE-Civil	PE-Mech/SG,PE-Mech/SG,PE-Mech/Layout,PE-C&I,PE-Electrical,PE-Civil,	322	172
28	0000-109-PVC-B-022-SHT-6			GA & RCC Detail of Superstructure of Gypsum Dewatering Building : GA & RC Details of Roof Beams & Slab		A	D	FGD	MISCELLANEOUS	PE-Civil	PE-Civil,PE-Mech/SG,PE-Mech/SG,PE-Mech/Layout,	322	172
29	0000-109-PVC-B-022-SHT-7			GA & RCC Detail of Superstructure of Gypsum Dewatering Building : GA & RC Details of Lintel Beam		A	D	FGD	MISCELLANEOUS	PE-Civil	PE-Civil,PE-Mech/SG,PE-Mech/SG,PE-Mech/Layout,	322	172
30	0000-109-PVC-B-022-SHT-8			GA & RCC Detail of Superstructure of Gypsum Dewatering Building : GA & RC Details of Roof Beams & Slab at RL 308.65 m		A	D	FGD	MISCELLANEOUS	PE-Civil	PE-Civil,PE-Mech/SG,PE-Mech/SG,PE-Mech/Layout,	322	172
31	0000-109-PVC-B-022-SHT-9			GA & RCC Detail of Superstructure of Gypsum Dewatering Building - Superstructure Stairs		A	D	FGD	MISCELLANEOUS	PE-Civil	PE-Civil,PE-Mech/SG,PE-Mech/Layout,	322	172
32	0000-109-PVC-B-023			Architectural dwg of Gypsum Dewatering Building		A	D	FGD	MISCELLANEOUS	Architecture	PE-Civil,PE-Mech/SG,PE-Mech/Layout,PE-Electrical,	285	135
33	0000-109-PVC-B-024			GA of Foundation of Recycle Pump & Oxidation Blower Building		A	D	FGD	MISCELLANEOUS	PE-Civil	PE-Civil,PE-Mech/SG,PE-Mech/SG,PE-Electrical,PE-Mech/Layout,	322	172
34	0000-109-PVC-B-026			GA dwg of Recycle Pump & Oxidation Blower bldg Structure		I	D	FGD	MISCELLANEOUS	PE-Civil	PE-Civil,PE-Mech/Layout,PE-Mech/SG,PE-Mech/SG,PE-Electrical,	292	142

S. No.	NTPC_DRG_NO	Rev_drg_no_for_inouhse_drg	TO_BE_SHIFTED_TO_PACKAGE	DRG_TITLE	PROJECT_SPECIFC_INFORMATION	DRG_PURPOSE	DRG_TYPE	AREA	MILESTONE	CUSTODIAN	REVIEWERS	SUB_FROM_MP_AWARD	SUB_FROM_FGD_AWARD
35	0000-109-PVC-B-028			GA of Foundation of Ball Mill Building		A	D	FGD	MISCELLANEOUS	PE-Civil	PE-Civil,PE-Mech/Layout,PE-Mech/SG,PE-Mech/SG,PE-Electrical,	322	172
36	0000-109-PVC-B-029			RCC Detail of Foundation of Ball Mill Building		A	D	FGD	MISCELLANEOUS	PE-Civil	PE-Civil,PE-Mech/Layout,PE-Mech/SG,PE-Mech/SG,	322	172
37	0000-109-PVC-B-030-SHT-1			GA & RCC Detail of Superstructure of Ball Mill Building : GA & RC Details of Grade Beams		A	D	FGD	MISCELLANEOUS	PE-Civil	PE-Mech/Layout,PE-Mech/SG,PE-Mech/SG,PE-Civil,PE-Electrical,PE-C&I,	322	172
38	0000-109-PVC-B-030-SHT-10			GA & RCC Detail of Superstructure of Ball Mill Building : GA & Detail of Side Runner		I	D	FGD	MISCELLANEOUS	PE-Civil	PE-Mech/SG,	322	172
39	0000-109-PVC-B-030-SHT-11			GA & RCC Detail of Superstructure of Ball Mill Building : GA & Detail Monorail Beam		A	D	FGD	MISCELLANEOUS	PE-Civil	PE-Mech/SG,	322	172
40	0000-109-PVC-B-030-SHT-2			GA & RCC Detail of Superstructure of Ball Mill Building : RC Details of Columns above Ground Level		A	D	FGD	MISCELLANEOUS	PE-Civil	PE-Mech/Layout,PE-Mech/SG,PE-Mech/SG,PE-Civil,	322	172
41	0000-109-PVC-B-030-SHT-3			GA & RCC Detail of Superstructure of Ball Mill Building : GA & RC Details of Floor Beams & Slab at RL. 292.1 m		A	D	FGD	MISCELLANEOUS	PE-Civil	PE-Mech/Layout,PE-Mech/SG,PE-Mech/SG,PE-Civil,	322	172
42	0000-109-PVC-B-030-SHT-4			GA & RCC Detail of Superstructure of Ball Mill Building : GA & RC Details of Floor Beams & Slab at RL. 296.76 m		A	D	FGD	MISCELLANEOUS	PE-Civil	PE-Mech/Layout,PE-Mech/SG,PE-Mech/SG,PE-Civil,	322	172
43	0000-109-PVC-B-030-SHT-5			GA & RCC Detail of Superstructure of Ball Mill Building : GA & RC Details of Grade Slab		A	D	FGD	MISCELLANEOUS	PE-Civil	PE-Mech/Layout,PE-Mech/SG,PE-Electrical,PE-C&I,PE-Mech/SG,PE-Civil,	322	172
44	0000-109-PVC-B-030-SHT-6			GA & RCC Detail of Superstructure of Ball Mill Building : GA & RC Details of Lintel Beams		A	D	FGD	MISCELLANEOUS	PE-Civil	PE-Mech/Layout,PE-Mech/SG,PE-Mech/SG,PE-Civil,PE-Electrical,PE-C&I,	322	172
45	0000-109-PVC-B-030-SHT-7			GA & RCC Detail of Superstructure of Ball Mill Building : GA & Detail of Base Plate of Steel Structure		I	D	FGD	MISCELLANEOUS	PE-Civil	PE-Mech/SG,PE-Civil,	322	172
46	0000-109-PVC-B-030-SHT-8			GA & RCC Detail of Superstructure of Ball Mill Building : GA & Detail of Steel Superstructure		I	D	FGD	MISCELLANEOUS	PE-Civil	PE-Mech/SG,	322	172
47	0000-109-PVC-B-030-SHT-9			GA & RCC Detail of Superstructure of Ball Mill Building : GA & Detail of Steel Truss		I	D	FGD	MISCELLANEOUS	PE-Civil	PE-Mech/SG,	322	172
48	0000-109-PVC-B-031			Architectural dwg of Ball Mill Building		A	D	FGD	MISCELLANEOUS	Architecture	PE-Mech/Layout,PE-Mech/SG,PE-Mech/SG,PE-Civil,PE-Electrical,	278	128
49	0000-109-PVC-B-032			Foundations for Gypsum Bleed pump & its drive		A	D	FGD	MISCELLANEOUS	PE-Civil	PE-Mech/Layout,PE-Mech/SG,PE-Mech/SG,PE-Electrical,	278	128
50	0000-109-PVC-B-033			Foundations for Oxidation Blower and its drive		A	D	FGD	MISCELLANEOUS	PE-Civil	PE-Mech/Layout,PE-Mech/SG,PE-Mech/SG,PE-Electrical,	310	160
51	0000-109-PVC-B-034			GA of Foundation of Booster Fan		A	D	FGD	MISCELLANEOUS	PE-Civil	PE-Mech/Layout,PE-Mech/SG,PE-Mech/SG,PE-Electrical,	286	136
52	0000-109-PVC-B-035			RCC Detail of Foundation of Booster Fan		A	D	FGD	MISCELLANEOUS	PE-Civil	PE-Mech/Layout,PE-Mech/SG,PE-Mech/SG,PE-Electrical,	286	136

S. No.	NTPC_DRG_NO	Rev_drg_no_for_inouhse_drg	TO_BE_SHIFTED_TO_PACKAGE	DRG_TITLE	PROJECT_SPECIFC_INFORMATION	DRG_PURPOSE	DRG_TYPE	AREA	MILESTONE	CUSTODIAN	REVIEWERS	SUB_FROM_MP_AWARD	SUB_FROM_FGD_AWARD
53	0000-109-PVC-B-036			GA of Foundation of Ball Mill		A	D	FGD	MISCELLANEOUS	PE-Civil	PE-Mech/Layout,PE-Mech/SG,PE-Mech/SG,PE-Electrical,	313	163
54	0000-109-PVC-B-037			RCC Detail of Foundation of Ball Mill		A	D	FGD	MISCELLANEOUS	PE-Civil	PE-Mech/Layout,PE-Mech/SG,PE-Mech/SG,PE-Electrical,	313	163
55	0000-109-PVC-B-038			GA of Foundation of Absorber		A	D	FGD	MISCELLANEOUS	PE-Civil	PE-Mech/Layout,PE-Mech/SG,PE-Mech/SG,PE-Electrical,PE-Civil,	242	92
56	0000-109-PVC-B-041			GA of Foundation of Transformer		A	D	FGD	MISCELLANEOUS	PE-Civil	PE-Mech/Layout,PE-Electrical,	322	172
57	0000-109-PVC-B-042			RCC Detail of Foundation of Transformer		A	D	FGD	MISCELLANEOUS	PE-Civil	PE-Mech/Layout,PE-Electrical,	322	172
58	0000-109-PVC-B-044			GA & RCC Detail of Foundation of Reagent Feed Pump		A	D	FGD	MISCELLANEOUS	PE-Civil	PE-Mech/SG,PE-Mech/SG,PE-Electrical,	278	128
59	0000-109-PVC-B-045			GA & RCC Detail of Foundation of Limestone Preparation Area Sump Pump		A	D	FGD	MISCELLANEOUS	PE-Civil	PE-Mech/SG,PE-Mech/SG,PE-Electrical,	278	128
60	0000-109-PVC-B-046			GA & RCC Detail of Foundation of Recycle Pump		A	D	FGD	MISCELLANEOUS	PE-Civil	PE-Mech/SG,PE-Mech/SG,PE-Electrical,	244	94
61	0000-109-PVC-B-047			GA & RCC Detail of Foundation of Absorber Area Sump Pump		A	D	FGD	MISCELLANEOUS	PE-Civil	PE-Mech/SG,PE-Mech/SG,PE-Electrical,	271	121
62	0000-109-PVC-B-053			GA & RCC Detail of Foundation of Belt Filter Wash Pump		A	D	FGD	MISCELLANEOUS	PE-Civil	PE-Mech/SG,PE-Mech/SG,PE-Electrical,	292	142
63	0000-109-PVC-B-054			GA & RCC Detail of Foundation of Dewatering Area Sump Pump		A	D	FGD	MISCELLANEOUS	PE-Civil	PE-Mech/SG,PE-Mech/SG,PE-Electrical,	278	128
64	0000-109-PVC-B-055			GA & RCC Detail of Foundation of Auxiliary Storage Tank Pump		A	D	FGD	MISCELLANEOUS	PE-Civil	PE-Mech/SG,PE-Mech/SG,PE-Electrical,	278	128
65	0000-109-PVC-B-056			GA & RCC Detail of Foundation of Make-up water Booster Pump		A	D	FGD	MISCELLANEOUS	PE-Civil	PE-Mech/SG,PE-Mech/SG,PE-Electrical,	271	121
66	0000-109-PVC-B-057			GA & RCC Detail of Foundation of Mist Eliminator Water Pump		A	D	FGD	MISCELLANEOUS	PE-Civil	PE-Mech/SG,PE-Mech/SG,PE-Electrical,	270	120
67	0000-109-PVC-B-058			GA & RCC Detail of Foundation of Process (Make-up) Water Pump		A	D	FGD	MISCELLANEOUS	PE-Civil	PE-Mech/SG,PE-Mech/SG,PE-Electrical,	264	114
68	0000-109-PVC-B-059			Detail civil drawings for Road		A	D	FGD	MISCELLANEOUS	PE-Civil	PE-Mech/Layout,	320	170
69	0000-109-PVC-B-060			Detail civil drawings for Pavement		A	D	FGD	MISCELLANEOUS	PE-Civil	PE-Mech/Layout,PE-Mech/SG,PE-Mech/SG,	322	172
70	0000-109-PVC-B-061			Detail civil drawings for Drains		A	D	FGD	MISCELLANEOUS	PE-Civil	PE-Mech/Layout,PE-Mech/SG,PE-Mech/SG,	322	172
71	0000-109-PVC-B-062			LAYOUT OF FOUNDATION FOR FGD EQUIPMENT		A	D	FGD	MISCELLANEOUS	PE-Civil	PE-Civil,PE-Mech/Layout,PE-Mech/SG,PE-Mech/SG,PE-Electrical,	322	172
72	0000-109-PVC-B-063			ABSORBER LOAD DATA		A	D	FGD	MISCELLANEOUS	PE-Civil	PE-Civil,PE-Civil,	322	172
73	0000-109-PVC-B-064			Foundation Load Data for Auxiliary Storage Tank		A	D	FGD	MISCELLANEOUS	PE-Civil	-,	322	172
74	0000-109-PVC-B-065			Foundation Load Data for Reagent Feed Tank		A	D	FGD	MISCELLANEOUS	PE-Civil	PE-Mech/SG,PE-Mech/Layout,	322	172
75	0000-109-PVC-B-066			Foundation Load Data for Process (Makeup) Water Tank		A	D	FGD	MISCELLANEOUS	PE-Civil	PE-Mech/SG,PE-Mech/Layout,	322	172
76	0000-109-PVC-B-067			Foundation Load Data for Waste Water Tank		A	D	FGD	MISCELLANEOUS	PE-Civil	PE-Mech/SG,PE-Mech/Layout,	322	172
77	0000-109-PVC-B-068			Foundation Load Data for Filtrate Water Tank		A	D	FGD	MISCELLANEOUS	PE-Civil	PE-Mech/SG,PE-Mech/Layout,	322	172
78	0000-109-PVC-B-069			Foundation Load Data for Secondary Hydrocyclone Feed Tank		A	D	FGD	MISCELLANEOUS	PE-Civil	PE-Mech/SG,PE-Mech/Layout,	322	172

S. No.	NTPC_DRG_NO	Rev_drg_no_for_inouhse_drg	TO_BE_SHIFTED_TO_PACKAGE	DRG_TITLE	PROJECT_SPECIFC_INFORMATION	DRG_PURPOSE	DRG_TYPE	AREA	MILESTONE	CUSTODIAN	REVIEWERS	SUB_FROM_MP_AWARD	SUB_FROM_FGD_AWARD
79	0000-109-PVC-B-071			GA & RCC Detail of Booster Fan Outlet to GGH Duct Support Foundation		A	D	FGD	MISCELLANEOUS	PE-Civil	PE-Mech/SG,PE-Mech/Layout,	322	172
80	0000-109-PVC-B-072			GA & RCC Detail of FDN for Duct Support DS 6 & DS 7 for Stack Inlet Duct		A	D	FGD	MISCELLANEOUS	PE-Civil	PE-Mech/SG,PE-Mech/Layout,	322	172
81	0000-109-PVC-B-073			GA & RCC Detail of FDN for Duct Support DS 8 & DS 9 for Stack Inlet Duct		A	D	FGD	MISCELLANEOUS	PE-Civil	PE-Mech/SG,PE-Mech/Layout,	322	172
82	0000-109-PVC-B-074			FDN Load Data with Base Plate & FDN Bolt Detail for DS 8&9		A	D	FGD	MISCELLANEOUS	PE-Civil	PE-Mech/SG,	322	172
83	0000-109-PVC-B-075			Foundation Load Data with base Plate & Foundation Bolt Detail For GGH Support Structure		A	D	FGD	MISCELLANEOUS	PE-Civil	PE-Mech/SG,PE-Civil,	322	172
84	0000-109-PVC-B-076			Foundation Load Data with base Plate & Foundation Bolt Detail For Duct Support Structure DS-1		A	D	FGD	MISCELLANEOUS	PE-Civil	PE-Mech/SG,	322	172
85	0000-109-PVC-B-079			Foundation Load Data with base Plate & Foundation Bolt Detail For Pipe & Cable Support Structure		A	D	FGD	MISCELLANEOUS	PE-Civil	PE-Mech/SG,PE-Electrical,	322	172
86	0000-109-PVC-B-080			Foundation Load Data with base Plate & Foundation Bolt Detail For Recycle Pipe Support Structure		A	D	FGD	MISCELLANEOUS	PE-Civil	PE-Mech/SG,	322	172
87	0000-109-PVC-B-082			GA & RCC Detail of FDN DS 1		A	D	FGD	MISCELLANEOUS	PE-Civil	PE-Mech/SG,	322	172
88	0000-109-PVC-B-083			GA & RCC Detail of FDN DS 2		A	D	FGD	MISCELLANEOUS	PE-Civil	PE-Mech/SG,	322	172
89	0000-109-PVC-B-084			GA & RCC Detail of FDN DS 3		A	D	FGD	MISCELLANEOUS	PE-Civil	PE-Mech/SG,PE-Mech/Layout,	322	172
90	0000-109-PVC-B-088			Foundation Load Data of Pipe & Cable Tray Support Structure		A	D	FGD	MISCELLANEOUS	PE-Civil	PE-Mech/SG,PE-Electrical,	322	172
91	0000-109-PVC-B-089			GA & RCC Details of Pipe & Cable Support Foundations mkd. F3 to F5		A	D	FGD	MISCELLANEOUS	PE-Civil	PE-Mech/SG,PE-Electrical,PE-Mech/Layout,	322	172
92	0000-109-PVC-B-091			Foundation Load Data with Base Plate and Anchor Bolt detail for GGH Stair		A	D	FGD	MISCELLANEOUS	PE-Civil	PE-Mech/SG,PE-Civil,	322	172
93	0000-109-PVC-B-092			GA & RCC Details of GGH Stair Foundation		A	D	FGD	MISCELLANEOUS	PE-Civil	PE-Mech/SG,PE-Civil,PE-Mech/Layout,	322	172
94	0000-109-PVC-B-095			GA & RCC Detail of External Recycle Pipe Support Foundation		A	D	FGD	MISCELLANEOUS	PE-Civil	PE-Civil,PE-Mech/SG,	322	172
95	0000-109-PVC-B-096			GA & RCC Detail of Cooling Water Pump		A	D	FGD	MISCELLANEOUS	PE-Civil	PE-Civil,PE-Mech/SG,	322	172
96	0000-109-PVC-B-097			GA & RC Details of Air Receivers		A	D	FGD	MISCELLANEOUS	PE-Civil	PE-Civil,PE-Mech/SG,PE-Mech/Layout,	322	172
97	0000-109-PVC-B-098			Detail civil drawing for sewerage system		A	D	FGD	MISCELLANEOUS	PE-Civil	PE-Civil,PE-Mech/SG,PE-Mech/Layout,	322	172
98	0000-109-PVC-B-101			FGD Chimney-General Arrangement		A		FGD	MISCELLANEOUS	PE-Civil	PE-Mech/SG,PE-Mech/Layout, PE-Electrical, PE-C&I	240	90
99	0000-109-PVC-B-102			FGD Chimney- Foundation Details (Main Reinforcement)		A		FGD	MISCELLANEOUS	PE-Civil		255	105
100	0000-109-PVC-B-103			FGD Chimney- Foundation Details (Shell Dowels)		A		FGD	MISCELLANEOUS	PE-Civil		270	120
101	0000-109-PVC-B-104			FGD Chimney- Foundation Details (Duct Pedestals)		A		FGD	MISCELLANEOUS	PE-Civil	PE-Mech/SG,PE-Mech/Layout	270	120
102	0000-109-PVC-B-105			FGD Chimney- Shell Profile and Details of Main Reinforcement		A		FGD	MISCELLANEOUS	PE-Civil		300	150
103	0000-109-PVC-B-106			FGD Chimney- Details of Construction Openings in Shell		A		FGD	MISCELLANEOUS	PE-Civil		340	190
104	0000-109-PVC-B-107			FGD Chimney- Details of Door & Miscellaneous Openings in Shell below EL (+) 10.00 M		A		FGD	MISCELLANEOUS	PE-Civil	PE-Electrical	350	200

S. No.	NTPC_DRG_NO	Rev_drg_no_for_inouhse_drg	TO_BE_SHIFTED_TO_PACKAGE	DRG_TITLE	PROJECT_SPECIFC_INFORMATION	DRG_PURPOSE	DRG_TYPE	AREA	MILESTONE	CUSTODIAN	REVIEWERS	SUB_FROM_MP_AWARD	SUB_FROM_FGD_AWARD
105	0000-109-PVC-B-108			FGD Chimney- Details of Openings in Shell for Ducts		A		FGD	MISCELLANEOUS	PE-Civil	PE-Mech/SG,PE-Mech/Layout	355	205
106	0000-109-PVC-B-109			FGD Chimney- Details of Recesses in Shell for Platform No. 1		A		FGD	MISCELLANEOUS	PE-Civil		375	225
107	0000-109-PVC-B-110			FGD Chimney- Details of Recesses in Shell for Platform No. 2		A		FGD	MISCELLANEOUS	PE-Civil		405	255
108	0000-109-PVC-B-111			FGD Chimney- Details of Recesses in Shell for Platform No. 3		A		FGD	MISCELLANEOUS	PE-Civil		415	265
109	0000-109-PVC-B-112			FGD Chimney- Details of Recesses in Shell for Platform No.4		A		FGD	MISCELLANEOUS	PE-Civil		440	290
110	0000-109-PVC-B-113			FGD Chimney- Details of Air Outlet Openings in Shell below Roof		A		FGD	MISCELLANEOUS	PE-Civil		460	310
111	0000-109-PVC-B-114			FGD Chimney- Details of Recesses in Shell for Roof Platform		A		FGD	MISCELLANEOUS	PE-Civil		460	310
112	0000-109-PVC-B-115			FGD Chimney- Details of Roof Platform		A		FGD	MISCELLANEOUS	PE-Civil		395	245
113	0000-109-PVC-B-116			FGD Chimney- Details of Platform No.4		A		FGD	MISCELLANEOUS	PE-Civil		425	275
114	0000-109-PVC-B-117			FGD Chimney- Details of Platform No. 3		A		FGD	MISCELLANEOUS	PE-Civil		445	295
115	0000-109-PVC-B-118			FGD Chimney- Details of Platform No. 2		A		FGD	MISCELLANEOUS	PE-Civil		465	315
116	0000-109-PVC-B-119			FGD Chimney- Details of Platform No. 1		A		FGD	MISCELLANEOUS	PE-Civil		475	325
117	0000-109-PVC-B-120			FGD Chimney- General Arrangement of Liner		A		FGD	MISCELLANEOUS	PE-Civil	PE-Mech/SG	385	235
118	0000-109-PVC-B-121			FGD Chimney- Details of Liner / Can Type-A		I		FGD	MISCELLANEOUS	PE-Civil		385	235
119	0000-109-PVC-B-122			FGD Chimney- Details of Liner / Can Type - F & G		I		FGD	MISCELLANEOUS	PE-Civil		435	285
120	0000-109-PVC-B-123			FGD Chimney- Details of Liner / Can Type - E & H		I		FGD	MISCELLANEOUS	PE-Civil		450	300
121	0000-109-PVC-B-124			FGD Chimney- Details of Liner / Can Type - B & C		I		FGD	MISCELLANEOUS	PE-Civil		455	305
122	0000-109-PVC-B-125			FGD Chimney- Details of Liner / Can Type - D		I		FGD	MISCELLANEOUS	PE-Civil		480	330
123	0000-109-PVC-B-126			FGD Chimney- Details of Manholes in Liners		I		FGD	MISCELLANEOUS	PE-Civil	PE-Mech/SG	480	330
124	0000-109-PVC-B-127			FGD Chimney- Fixing Details of Liner Insulation		I		FGD	MISCELLANEOUS	PE-Civil		495	345
125	0000-109-PVC-B-128			FGD Chimney- Details of Liner Support Beams and Hanger		A		FGD	MISCELLANEOUS	PE-Civil		490	340
126	0000-109-PVC-B-129			FGD Chimney- Details of Liner Restraint		A		FGD	MISCELLANEOUS	PE-Civil		500	350
127	0000-109-PVC-B-130			FGD Chimney- Details of Liner Expansion Joints		A		FGD	MISCELLANEOUS	PE-Civil	PE-Mech/SG	495	345
128	0000-109-PVC-B-131			FGD Chimney- Details of Mini-Shell		A		FGD	MISCELLANEOUS	PE-Civil		540	390
129	0000-109-PVC-B-132			FGD Chimney- Layout of Staircase		I		FGD	MISCELLANEOUS	PE-Civil		430	280
130	0000-109-PVC-B-133			FGD Chimney- Details of Staircase		I		FGD	MISCELLANEOUS	PE-Civil		430	280
131	0000-109-PVC-B-134			FGD Chimney- Details of Ladders, Hatches and other Miscellaneous Items		I		FGD	MISCELLANEOUS	PE-Civil		440	290
132	0000-109-PVC-B-135			FGD Chimney- Details of Roof Slab		A		FGD	MISCELLANEOUS	PE-Civil		480	330
133	0000-109-PVC-B-136			FGD Chimney- Details of Grade Level Slab		A		FGD	MISCELLANEOUS	PE-Civil		510	360
134	0000-109-PVC-B-137			FGD Chimney- Scheme for Aviation Obstruction Markings		A		FGD	MISCELLANEOUS	PE-Civil		525	375
135	0000-109-PVC-B-138			FGD Chimney- Layout and Details of Strakes		A		FGD	MISCELLANEOUS	PE-Civil		420	270
136	0000-109-PVC-B-139			FGD Chimney-Supporting Arrangement for Gas Analyzer Panels & Details of Sampling Ports in Liner		A		FGD	MISCELLANEOUS	PE-Civil	PE-C&I	540	390
137	0000-109-PVC-U-001			Structural Design Basis - Civil		A	A	FGD	MISCELLANEOUS	PE-Civil	PE-Civil,PE-Mech/SG,	160	10
138	0000-109-PVC-U-002			Civil Design Basis		A	A	FGD	MISCELLANEOUS	PE-Civil	PE-Civil,	207	57

S. No.	NTPC_DRG_NO	Rev_drg_no_for_inouhse_drg	TO_BE_SHIFTED_TO_PACKAGE	DRG_TITLE	PROJECT_SPECIFC_INFORMATION	DRG_PURPOSE	DRG_TYPE	AREA	MILESTONE	CUSTODIAN	REVIEWERS	SUB_FROM_MP_AWARD	SUB_FROM_FGD_AWARD
139	0000-109-PVC-U-003			Design Calculation for Tank foundations		I	D	FGD	MISCELLANEOUS	PE-Civil	-,	255	105
140	0000-109-PVC-U-010			Design calculation for GGH support structure foundation		I	D	FGD	MISCELLANEOUS	PE-Civil	-,	272	122
141	0000-109-PVC-U-012			Design calculation for Duct support foundation		I	D	FGD	MISCELLANEOUS	PE-Civil	PE-Civil,	292	142
142	0000-109-PVC-U-014			Design calculation for Pipe Rack structure foundation		I	D	FGD	MISCELLANEOUS	PE-Civil	PE-Civil,	302	152
143	0000-109-PVC-U-016			Design Calculation for Electrical equipments & control Building foundation		I	D	FGD	MISCELLANEOUS	PE-Civil	PE-Civil,	302	152
144	0000-109-PVC-U-018			Design Calculation for Electrical equipments & control Building Superstructure		I	D	FGD	MISCELLANEOUS	PE-Civil	PE-Civil,	302	152
145	0000-109-PVC-U-020			Design Calculation for Gypsum Dewatering Building foundation		I	D	FGD	MISCELLANEOUS	PE-Civil	-,	322	172
146	0000-109-PVC-U-021			Calculation Report of Dewatering Building Superstructure		I	D	FGD	MISCELLANEOUS	PE-Civil	PE-Civil,	550	400
147	0000-109-PVC-U-024			Design Calculation for Recycle Pump & Oxidation Blower bldg foundation		I	D	FGD	MISCELLANEOUS	PE-Civil	-,	292	142
148	0000-109-PVC-U-028			Design Calculation for Ball Mill Building foundation		I	D	FGD	MISCELLANEOUS	PE-Civil	-,	322	172
149	0000-109-PVC-U-030			Calculation Report of Ball Mill Building Superstructure		I	D	FGD	MISCELLANEOUS	PE-Civil	PE-Civil,	550	400
150	0000-109-PVC-U-034			Design Calculation for Booster Fan foundation		A	D	FGD	MISCELLANEOUS	PE-Civil	-,	286	136
151	0000-109-PVC-U-036			Design Calculation for Ball Mill foundation		I	D	FGD	MISCELLANEOUS	PE-Civil	-,	313	163
152	0000-109-PVC-U-038			Design Calculation for Absorber foundation		I	D	FGD	MISCELLANEOUS	PE-Civil	PE-Civil,	242	92
153	0000-109-PVC-U-041			Design Calculation for Transformer Foundation		A	D	FGD	MISCELLANEOUS	PE-Civil	-,	322	172
154	0000-109-PVC-U-042			Design Calculation for Reagent Feed Pump Foundation		I	D	FGD	MISCELLANEOUS	PE-Civil	-,	285	135
155	0000-109-PVC-U-043			Design Calculation for Pumps foundation		I	D	FGD	MISCELLANEOUS	PE-Civil	-,	285	135
156	0000-109-PVC-U-044			Calculation Report of Waste Water Tank Foundation		I	D	FGD	MISCELLANEOUS	PE-Civil	-,	285	135
157	0000-109-PVC-U-045			Calculation Report of Process (Make up) Water Tank Foundation		I	D	FGD	MISCELLANEOUS	PE-Civil	-,	285	135
158	0000-109-PVC-U-046			Calculation Report of Secondary HC Feed Tank Foundation		I	D	FGD	MISCELLANEOUS	PE-Civil	-,	285	135
159	0000-109-PVC-U-047			Calculation Report of Filtrate Water Tank Foundation		I	D	FGD	MISCELLANEOUS	PE-Civil	-,	285	135
160	0000-109-PVC-U-048			Design Calculation of Auxiliary Storage Return Pump & Gypsum Bleed Pump		I	D	FGD	MISCELLANEOUS	PE-Civil	-,	285	135
161	0000-109-PVC-U-049			Design Calculation of Gypsum Bleed Pump		I	D	FGD	MISCELLANEOUS	PE-Civil	-,	285	135
162	0000-109-PVC-U-070			Calculation Report for Booster Fan Inlet Duct Support Foundation		I	D	FGD	MISCELLANEOUS	PE-Civil	-,	285	135
163	0000-109-PVC-U-071			Calculation Report for Booster Fan Outlet to GGH Duct Support Foundation		I	D	FGD	MISCELLANEOUS	PE-Civil	-,	285	135
164	0000-109-PVC-U-083			Calculation Report of Duct Support Foundation DS-2		I	D	FGD	MISCELLANEOUS	PE-Civil	-,	285	135
165	0000-109-PVC-U-084			Design Calculation for Duct Support Foundation DS3		I	D	FGD	MISCELLANEOUS	PE-Civil	-,	285	135
166	0000-109-PVC-U-085			Calculation of Foundation of Oxidation Blower		I	D	FGD	MISCELLANEOUS	PE-Civil	-,	285	135
167	0000-109-PVC-U-086			Calculation Report of GGH Stair Foundation		I	D	FGD	MISCELLANEOUS	PE-Civil	-,	285	135
168	0000-109-PVC-U-101			FGD Chimney-Design basis report for chimney		I		FGD	MISCELLANEOUS	PE-Civil		200	50
169	0000-109-PVC-U-102			FGD Chimney-Analysis and design of raft foundation for chimn		I		FGD	MISCELLANEOUS	PE-Civil		255	105

S. No.	NTPC_DRG_NO	Rev_drg_no_for_inouhse_drg	TO_BE_SHIFTED_TO_PACKAGE	DRG_TITLE	PROJECT_SPECIFC_INFORMATION	DRG_PURPOSE	DRG_TYPE	AREA	MILESTONE	CUSTODIAN	REVIEWERS	SUB_FROM_MP_AWARD	SUB_FROM_FGD_AWARD
170	0000-109-PVC-U-103			FGD Chimney-Analysis & design of RCC shell		I		FGD	MISCELLANEOUS	PE-Civil		300	150
171	0000-109-PVC-U-104			FGD Chimney-Design of platform beams of Roof Platform		I		FGD	MISCELLANEOUS	PE-Civil		395	245
172	0000-109-PVC-U-105			FGD Chimney-Design of platform beams of Platform No. 4		I		FGD	MISCELLANEOUS	PE-Civil		425	275
173	0000-109-PVC-U-106			FGD Chimney-Design of platform beams of Platform No. 3		I		FGD	MISCELLANEOUS	PE-Civil		445	295
174	0000-109-PVC-U-107			FGD Chimney-Design of platform beams of Platform No. 2		I		FGD	MISCELLANEOUS	PE-Civil		465	315
175	0000-109-PVC-U-108			FGD Chimney-Design of platform beams of Platform No. 1		I		FGD	MISCELLANEOUS	PE-Civil		475	325
176	0000-109-PVC-U-109			FGD Chimney-Analysis and design flue liner		I		FGD	MISCELLANEOUS	PE-Civil		385	235
177	0000-109-PVC-U-110			FGD Chimney-Design of extra reinforcement around openings		I		FGD	MISCELLANEOUS	PE-Civil		350	200
178	0000-109-PVC-U-111			FGD Chimney-Design of extra reinforcement around recesses f		I		FGD	MISCELLANEOUS	PE-Civil		375	225
179	0000-109-PVC-W-001			Standard Details for Concrete Works		A	D	FGD	MISCELLANEOUS	PE-Civil	PE-Civil,	280	130
180	0000-109-PVC-W-002			Standared Notes for Concrete Works		A	D	FGD	MISCELLANEOUS	PE-Civil	PE-Civil,	280	130
181	0000-109-PVC-W-003			Soil Investigation Report		A	D	FGD	MISCELLANEOUS	PE-Civil	-,	280	130
182	0000-109-PVC-W-004			Location Plan ¿ Site Office, Stores & Access Road		A	D	FGD	MISCELLANEOUS	PE-Civil	PE-Mech/SG,PE-Mech/SG,PE-Mech/Layout,	280	130
183	0000-109-PVC-W-101			FGD Chimney - wind tunnel test procedure		A		FGD	MISCELLANEOUS	PE-Civil		330	180
184	0000-109-PVC-W-102			FGD Chimney - wind tunnel test report		A		FGD	MISCELLANEOUS	PE-Civil		420	270
185	0000-109-PVC-Y-101			FGD Chimney- GA of expansion conpensator		I		FGD	MISCELLANEOUS	PE-Civil		510	360
186	0000-109-PVC-Y-102			FGD Chimney- Datasheet for expansion conpensator		I		FGD	MISCELLANEOUS	PE-Civil		510	360
187	0000-109-PVC-Y-103			FGD Chimney- Datasheet for thermal insulation		I		FGD	MISCELLANEOUS	PE-Civil		495	345
188	0000-109-PVE-B-001			FGD Lighting Panel GA & Schematic and wiring drawing		I	B	FGD	MISCELLANEOUS	PE-Electrical	-,	336	186
189	0000-109-PVE-B-002			GA. Datasheet, Terminal Box arrangement and Curves of Slurry Recirculation pump-Motor		A	B	FGD	MISCELLANEOUS	PE-Electrical	PE-Mech/SG,PE-Mech/SG,	320	170
190	0000-109-PVE-B-003			GA. Datasheet, Terminal Box arrangement and Curves of Oxidation Blower-Motor		A	B	FGD	MISCELLANEOUS	PE-Electrical	PE-Mech/SG,PE-Mech/SG,	306	156
191	0000-109-PVE-B-004			GA. Datasheet, Terminal Box arrangement and Curves of BALL MILL Motor		A	B	FGD	MISCELLANEOUS	PE-Electrical	PE-Mech/SG,PE-Mech/SG,	306	156
192	0000-109-PVE-B-005			GA. Datasheet, Terminal Box arrangement and Curves of Booster fan Motor		A	B	FGD	MISCELLANEOUS	PE-Electrical	PE-Mech/SG,PE-Mech/SG,	285	135
193	0000-109-PVE-B-006			GA of cable tray support system		A	D	FGD	MISCELLANEOUS	PE-Electrical	-,	322	172
194	0000-109-PVE-B-007			GA,SLD and BOQ of DCFB		A	B	FGD	MISCELLANEOUS	PE-Electrical	-,	336	186
195	0000-109-PVE-B-008			Drawing for Power Distribution Panels		A	B	FGD	MISCELLANEOUS	PE-Electrical	-,	164	14
196	0000-109-PVE-B-009			Drawing for VFD Panels		A	B	FGD	MISCELLANEOUS	PE-Electrical	-,	164	14
197	0000-109-PVE-B-010			Drawing for Local Starters		A	B	FGD	MISCELLANEOUS	PE-Electrical	-,	164	14
198	0000-109-PVE-B-011			GA,SLD,Scheme and BOQ of FGD MCC		A	B	FGD	MISCELLANEOUS	PE-Electrical	-,	265	115
199	0000-109-PVE-B-012			Datasheet/Drawing for Junction Box (24way, 48way, 72way, 96way)		A	B	FGD	MISCELLANEOUS	PE-C&I	PE-C&I,PE-Electrical,	563	413
200	0000-109-PVE-B-013			Drawing for AC Distribution Board		A	B	FGD	MISCELLANEOUS	PE-Electrical	-,	336	186
201	0000-109-PVE-B-014			Drawing Local Push Button Station.		A	B	FGD	MISCELLANEOUS	PE-Electrical	-,	507	357
202	0000-109-PVE-F-001			FGD MCC Control Room - Equipment and Cable Tray Layout		A	D	FGD	MISCELLANEOUS	PE-Electrical	PE-C&I,PE-C&I,PE-Mech/WS,	311	161
203	0000-109-PVE-F-002			Earthing scheme for FGD MCC Control Room		A	D	FGD	MISCELLANEOUS	PE-Electrical	-,	322	172
204	0000-109-PVE-F-003			Electrical Equipment & JBs Location Layout for complete FGD Area & Limestone & Gypsum Handling area		A	D	FGD	MISCELLANEOUS	PE-Electrical	PE-Mech/Layout,PE-Mech/MH,PE-Mech/SG,PE-Civil,	322	172
205	0000-109-PVE-F-004			Detail Cable Routing Plan for complete FGD Area & Limestone & Gypsum Handling area		A	D	FGD	MISCELLANEOUS	PE-Electrical	PE-Mech/Layout,PE-Mech/MH,PE-Mech/SG,PE-Civil,PE-C&I,	322	172

S. No.	NTPC_DRG_NO	Rev_drg_no_for_inouhse_drg	TO_BE_SHIFTED_TO_PACKAGE	DRG_TITLE	PROJECT_SPECIFC_INFORMATION	DRG_PURPOSE	DRG_TYPE	AREA	MILESTONE	CUSTODIAN	REVIEWERS	SUB_FROM_MP_AWARD	SUB_FROM_FGD_AWARD
206	0000-109-PVE-F-005			Illumination Layout and Road / area Lighting layout for complete FGD Area & Limestone & Gypsum Handling area		A	D	FGD	MISCELLANEOUS	PE-Electrical	PE-Mech/Layout,PE-Mech/MH,	322	172
207	0000-109-PVE-F-006			Earthing Layout for complete FGD Area & Limestone & Gypsum Handling area		A	D	FGD	MISCELLANEOUS	PE-Electrical	PE-Mech/Layout,PE-Mech/MH,PE-Civil,PE-Mech/SG,	322	172
208	0000-109-PVE-F-007			Lightning Protection Layout for complete FGD Area & Limestone & Gypsum Handling area		A	D	FGD	MISCELLANEOUS	PE-Electrical	-,	322	172
209	0000-109-PVE-G-001			Lighting Layout for FGD MCC Control Room		I	D	FGD	MISCELLANEOUS	PE-Electrical	-,	285	135
210	0000-109-PVE-G-002			Cable tray layout in FGD area		A	D	FGD	MISCELLANEOUS	PE-Electrical	PE-Mech/Layout,PE-Mech/SG,PE-Mech/SG,	311	161
211	0000-109-PVE-H-001			Cable schedule for power & control cables		I	D	FGD	MISCELLANEOUS	PE-Electrical	-,	297	147
212	0000-109-PVE-P-001			Electrical Scope diagram		A	A	FGD	MISCELLANEOUS	PE-Electrical	PE-C&I,PE-Mech/SG,	160	10
213	0000-109-PVE-R-001			Motor for Booster Fan - Sub QR documents of M/s Crompton Greaves Ltd., Bhopal		A	A	FGD	MISCELLANEOUS	PE-Electrical	-,	196	46
214	0000-109-PVE-R-002			Motor for Booster Fan - Sub QR documents of M/s Weg, Hosur		A	A	FGD	MISCELLANEOUS	PE-Electrical	-,	196	46
215	0000-109-PVE-R-003			Motor for Booster Fan - Sub QR documents of M/s Crompton Greaves Ltd., Mandideep		A	A	FGD	MISCELLANEOUS	PE-Electrical	-,	196	46
216	0000-109-PVE-V-001			FGD Lighting Fixtures & Accessories - Mounting Details & Drawing		I	B	FGD	MISCELLANEOUS	PE-Electrical	PE-Mech/SG,PE-Civil,	336	186
217	0000-109-PVE-W-001			Electrical load list - FGD		I	A	FGD	MISCELLANEOUS	PE-Electrical	PE-Mech/SG,PE-Mech/SG,	187	37
218	0000-109-PVE-W-002			Type test reports (above 50 KW LT motors)		A	B	FGD	MISCELLANEOUS	PE-Electrical	-,	322	172
219	0000-109-PVE-W-003			Type test report for Booster fan motor		A	B	FGD	MISCELLANEOUS	PE-Electrical	-,	322	172
220	0000-109-PVE-W-004			TTR of Slurry Recirculation pump-Motor		A	B	FGD	MISCELLANEOUS	PE-Electrical	-,	322	172
221	0000-109-PVE-W-005			TTR of Oxidation Blower-Motor		A	B	FGD	MISCELLANEOUS	PE-Electrical	-,	322	172
222	0000-109-PVE-W-006			TTR of BALL MILL Motor		A	B	FGD	MISCELLANEOUS	PE-Electrical	-,	322	172
223	0000-109-PVE-W-007			FGD-Type Test Reports for Lighting Panels		A	B	FGD	MISCELLANEOUS	PE-Electrical	-,	337	187
224	0000-109-PVE-W-008			FGD-Junction Boxes Type test Reports		A	B	FGD	MISCELLANEOUS	PE-C&I	PE-C&I,PE-Electrical,	564	414
225	0000-109-PVE-W-009			FGD-Lighting Fixtures Type Test Reports		A	B	FGD	MISCELLANEOUS	PE-Electrical	-,	337	187
226	0000-109-PVE-W-010			Type test reports for Power cable		A	B	FGD	MISCELLANEOUS	PE-Electrical	-,	337	187
227	0000-109-PVE-W-011			Type test reports for Control cable		A	B	FGD	MISCELLANEOUS	PE-Electrical	-,	337	187
228	0000-109-PVE-W-012			Type Test Procedure for HT motors		A	B	FGD	MISCELLANEOUS	PE-Electrical	-,	285	135
229	0000-109-PVE-W-013-SHT-1			Type Test Reports for FGD MCC Panels (PART 1)		A	D	FGD	MISCELLANEOUS	PE-Electrical	-,	164	14
230	0000-109-PVE-W-013-SHT-2			Type Test Reports for FGD MCC Panels (PART 2)		A	D	FGD	MISCELLANEOUS	PE-Electrical	-,	164	14
231	0000-109-PVE-W-014			Type Test Reports for Bus Duct		A	D	FGD	MISCELLANEOUS	PE-Electrical	-,	164	14
232	0000-109-PVE-W-016			Type Test Reports for Local Starters		A	D	FGD	MISCELLANEOUS	PE-Electrical	-,	164	14
233	0000-109-PVE-W-018			Type Test Procedure for HT Imported Motors.		A	B	FGD	MISCELLANEOUS	PE-Electrical	-,	164	14
234	0000-109-PVE-W-020			Type test reports (90 kW LT motors- Mist Eleiminator)		A	B	FGD	MISCELLANEOUS	PE-Electrical	-,	164	14
235	0000-109-PVE-W-021			Type test reports for Receptacles and Junction boxes		A	B	FGD	MISCELLANEOUS	PE-Electrical	-,	164	14
236	0000-109-PVE-W-022			Type test reports (55 kW LT motors-Compressor)		A	B	FGD	MISCELLANEOUS	PE-Electrical	-,	164	14
237	0000-109-PVE-W-023			Type test reports (75 kW & 55 kW LT motors-MH)		A	B	FGD	MISCELLANEOUS	PE-Electrical	-,	164	14
238	0000-109-PVE-Y-001			Datasheet, GA and curves for LT Motors (FURTHER BREAK UP NECESSARY)		A	B	FGD	MISCELLANEOUS	PE-Electrical	PE-Mech/SG,	164	14
239	0000-109-PVE-Y-002			Datasheet for Power cable		A	B	FGD	MISCELLANEOUS	PE-Electrical	-,	337	187
240	0000-109-PVE-Y-003			Datasheet for Control cable		A	B	FGD	MISCELLANEOUS	PE-Electrical	-,	337	187

S. No.	NTPC_DRG_NO	Rev_drg_no_for_inouhse_drg	TO_BE_SHIFTED_TO_PACKAGE	DRG_TITLE	PROJECT_SPECIFC_INFORMATION	DRG_PURPOSE	DRG_TYPE	AREA	MILESTONE	CUSTODIAN	REVIEWERS	SUB_FROM_MP_AWARD	SUB_FROM_FGD_AWARD
241	0000-109-PVE-Y-004			Datasheet for Control cable Additional Sizes (24Cx1.5 sqmm control cables)		A	B	FGD	MISCELLANEOUS	PE-Electrical	-,	524	374
242	0000-109-PVE-Y-005			Data sheet & layout of Bus-duct		A	B	FGD	MISCELLANEOUS	PE-Electrical	-,	475	325
243	0000-109-PVE-Y-006			Datasheet, GA and curves for LT Motors (Part II) - Agitator Motors		A	B	FGD	MISCELLANEOUS	PE-Electrical	-,	164	14
244	0000-109-PVE-Y-007			Datasheet, GA and curves for LT Motors (Part III) ¿ GGH Main Motor		A	B	FGD	MISCELLANEOUS	PE-Electrical	PE-Mech/SG,	164	14
245	0000-109-PVE-Y-008			Datasheet, GA and curves for LT Motors (Part IV) ¿ Clear water Pump Motor		A	B	FGD	MISCELLANEOUS	PE-Electrical	PE-Mech/SG,	164	14
246	0000-109-PVE-Y-009			Datasheet, GA and curves for LT Motors (Part V) ¿ GGH Aux. Motors		A	B	FGD	MISCELLANEOUS	PE-Electrical	PE-Mech/SG,	164	14
247	0000-109-PVE-Y-010			Datasheet, GA and curves for LT Motors (Part VI) ¿ GGH Aux. Motors.		A	B	FGD	MISCELLANEOUS	PE-Electrical	PE-Mech/SG,Kuntal Bhuiyan,	164	14
248	0000-109-PVE-Y-011			Datasheet, GA and curves for LT Motors (Part VII) ¿ MH Motors		A	B	FGD	MISCELLANEOUS	PE-Electrical	Kuntal Bhuiyan,PE-Mech/MH,	164	14
249	0000-109-PVE-Y-020			Datasheet for Power cable of Additional Sizes (3.5Cx50 sqmm power cables)		A	B	FGD	MISCELLANEOUS	PE-Electrical	-,	524	374
250	0000-109-PVE-Y-050			Datasheet for Earthing & Lightning Materials		A	B	FGD	MISCELLANEOUS	PE-Electrical	-,	524	374
251	0000-109-PVI-B-001			GA, BOQ & Data sheets for PLC Panels		I	B	FGD	MISCELLANEOUS	PE-C&I	-,	322	172
252	0000-109-PVI-B-002			PLC Power supply and earthing scheme drawing		I	B	FGD	MISCELLANEOUS	PE-C&I	PE-C&I,PE-Electrical,	322	172
253	0000-109-PVI-B-003			PLC Module wiring diagram		I	B	FGD	MISCELLANEOUS	PE-C&I	-,	322	172
254	0000-109-PVI-B-004			Drawing & Datasheet of Rotameter		I	B	FGD	MISCELLANEOUS	PE-C&I	PE-C&I,	164	14
255	0000-109-PVI-B-005			Drawing & Datasheet of LIE/LIR		I	B	FGD	MISCELLANEOUS	PE-C&I	-,	164	14
256	0000-109-PVI-B-006			Drawing & datasheet of Radar type Level Transmitter (for Silo)		I	B	FGD	MISCELLANEOUS	PE-C&I	-,	164	14
257	0000-109-PVI-B-007			GA, Datasheet and Wiring diagram of Lime Dosing Local Control Panel		I	B	FGD	MISCELLANEOUS	PE-C&I	PE-C&I,PE-Electrical,	164	14
258	0000-109-PVI-B-008			GA and Wiring Oxidation Blower Local Control Panel		I	B	FGD	MISCELLANEOUS	PE-Electrical	PE-C&I,Kuntal Bhuiyan,	164	14
259	0000-109-PVI-B-009			GA and Wiring Diagram Drawing for GGH-Multimedia Cleaner PLC Panel		I	B	FGD	MISCELLANEOUS	PE-C&I	PE-Electrical,	164	14
260	0000-109-PVI-F-001			Electronic Earthing Layout Drawing for FGD Control Room		I	D	FGD	MISCELLANEOUS	PE-C&I	PE-Electrical,	257	107
261	0000-109-PVI-G-001			Instrument list		I	A	FGD	MISCELLANEOUS	PE-C&I	PE-C&I,	194	44
262	0000-109-PVI-G-002			I/O List		I	D	FGD	MISCELLANEOUS	PE-C&I	-,	257	107
263	0000-109-PVI-G-003			Drive List		I	D	FGD	MISCELLANEOUS	PE-C&I	PE-C&I,	257	107
264	0000-109-PVI-G-004			Alarm & Trip Set Point List		I	D	FGD	MISCELLANEOUS	PE-C&I	-,	257	107
265	0000-109-PVI-H-001			Cable Schedule for power, control & instrument cables.		I	D	FGD	MISCELLANEOUS	PE-C&I	PE-C&I,	297	147
266	0000-109-PVI-P-001			Control system configuration diagrams and Write up		A	D	FGD	MISCELLANEOUS	PE-C&I	PE-C&I,	235	85
267	0000-109-PVI-P-002			Interfacing and connectivity diagram with the Employer system		I	D	FGD	MISCELLANEOUS	PE-C&I	-,	264	114
268	0000-109-PVI-P-009			CONTROL SYSTEM ARCHITECTURE of FGD System		I	D	FGD	MISCELLANEOUS	PE-C&I	PE-Mech/SG,	265	115
269	0000-109-PVI-Q-001			Installation Scheme, Instrument wiring and tubing diagrams (hook up)		I	D	FGD	MISCELLANEOUS	PE-C&I	-,	322	172
270	0000-109-PVI-T-001			Block logic diagrams with Sequence and protection interlock schemes		I	D	FGD	MISCELLANEOUS	PE-C&I	-,	272	122
271	0000-109-PVI-T-002			Logic Diagram for Sequence and Interlocking (AS IMPLEMENTED IN PLC)		I	D	FGD	MISCELLANEOUS	PE-C&I	-,	272	122
272	0000-109-PVI-U-007			Document for Sizing of UPS and Battery		A	D	FGD	MISCELLANEOUS	PE-C&I	PE-C&I,	166	16
273	0000-109-PVI-U-008			Document for Sizing of charger and Battery		A	D	FGD	MISCELLANEOUS	PE-C&I	PE-C&I,	164	14
274	0000-109-PVI-V-001			PLC Graphics and Mimics		I	D	FGD	MISCELLANEOUS	PE-C&I	-,	164	14

S. No.	NTPC_DRG_NO	Rev_drg_no_for_inouhse_drg	TO_BE_SHIFTED_TO_PACKAGE	DRG_TITLE	PROJECT_SPECIFC_INFORMATION	DRG_PURPOSE	DRG_TYPE	AREA	MILESTONE	CUSTODIAN	REVIEWERS	SUB_FROM_MP_AWARD	SUB_FROM_FGD_AWARD
275	0000-109-PVI-V-002			PLC Hardware design specification		I	D	FGD	MISCELLANEOUS	PE-C&I	PE-C&I,	164	14
276	0000-109-PVI-V-003			PLC software design specification		I	D	FGD	MISCELLANEOUS	PE-C&I	PE-C&I,	164	14
277	0000-109-PVI-W-001			ATST Procedure - FGD System		A	D	FGD	MISCELLANEOUS	PE-C&I	PE-C&I,	268	118
278	0000-109-PVI-W-003			Type Test Report of PLC System		I	B	FGD	MISCELLANEOUS	PE-C&I	PE-C&I,	322	172
279	0000-109-PVI-W-004			Type Test Report of Battery and Charger		A	B	FGD	MISCELLANEOUS	PE-C&I	-,	514	364
280	0000-109-PVI-W-006			Cable list of UPS and Charger		I	D	FGD	MISCELLANEOUS	PE-C&I	PE-C&I,	315	165
281	0000-109-PVI-W-007			Type Test report for Cable		I	B	FGD	MISCELLANEOUS	PE-C&I	-,	531	381
282	0000-109-PVI-W-008			FUNCTION CONTROL DESCRIPTION FOR FLUE GAS PATH SYSTEM		I	B	FGD	MISCELLANEOUS	PE-Mech/SG	PE-Mech/SG,PE-Mech/SG,PE-Mech/SG,	285	135
283	0000-109-PVI-W-009			FUNCTION CONTROL DESCRIPTION FOR ABOSRBER / OXIDATION BLOWER SYSTEM		I	B	FGD	MISCELLANEOUS	PE-Mech/SG	PE-C&I,PE-Mech/SG,PE-Mech/SG,	285	135
284	0000-109-PVI-W-010			FUNCTION CONTROL DESCRIPTION FOR LIMESTONE PREPARATION		I	B	FGD	MISCELLANEOUS	PE-Mech/SG	PE-Mech/SG,PE-Mech/SG,	285	135
285	0000-109-PVI-W-011			FUNCTION CONTROL DESCRIPTION FOR PRIMARY DEWATERING		I	B	FGD	MISCELLANEOUS	PE-Mech/SG	PE-C&I,PE-Mech/SG,PE-Mech/SG,	285	135
286	0000-109-PVI-W-012			FUNCTION CONTROL DESCRIPTION FOR SUMP PUMPS		I	D	FGD	MISCELLANEOUS	PE-Mech/SG	PE-C&I,PE-Mech/SG,PE-C&I,	285	135
287	0000-109-PVI-W-013			FUNCTION CONTROL DESCRIPTION FOR GYPSUM CONVEYORS		I	B	FGD	MISCELLANEOUS	PE-Mech/SG	PE-Mech/MH,PE-Mech/MH,	285	135
288	0000-109-PVI-W-014			Functional Control Description of Secondary Dewatering System		I	D	FGD	MISCELLANEOUS	PE-Mech/SG	PE-C&I,PE-Mech/SG,PE-Mech/SG,	285	135
289	0000-109-PVI-W-015			Functional Control Description of Process & Cooling Water System		I	D	FGD	MISCELLANEOUS	PE-Mech/SG	PE-Mech/SG,PE-Mech/SG,	285	135
290	0000-109-PVI-W-016			Functional Control Description of Belt Filter		I	D	FGD	MISCELLANEOUS	PE-Mech/SG	PE-C&I,PE-Mech/SG,PE-Mech/SG,PE-Mech/MH,	285	135
291	0000-109-PVI-W-017			FCD for Overview Control Description		I	D	FGD	MISCELLANEOUS	PE-Mech/SG	PE-Mech/SG,	285	135
292	0000-109-PVI-W-018			Mandatory Spare List for Instruments		I	D	FGD	MISCELLANEOUS	PE-C&I	PE-C&I,	285	135
293	0000-109-PVI-W-019			Logic diagram of FGD interface with boiler such as Booster Fan Blade Pitch Control, FGD bypass damper control, FGD Inlet and outlet gate control (Interlock & Control)		I	D	FGD	MISCELLANEOUS	PE-C&I	PE-Mech/SG,	285	135
294	0000-109-PVI-W-020			FCD for Limestone Handling System		I	D	FGD	MISCELLANEOUS	PE-Mech/SG	PE-Mech/MH,	285	135
295	0000-109-PVI-W-021			LIE/LIR & JB Grouping		I	D	FGD	MISCELLANEOUS	PE-C&I	PE-C&I,	285	135
296	0000-109-PVI-W-022			Instruments location drawing/layout		I	D	FGD	MISCELLANEOUS	PE-C&I	-,	285	135
297	0000-109-PVI-W-023			Pre-ATST report-FGD system		I	D	FGD	MISCELLANEOUS	PE-C&I	-,	285	135
298	0000-109-PVI-Y-001			Data sheets for Instrumentation and control Cable.		A	B	FGD	MISCELLANEOUS	PE-C&I	-,	531	381
299	0000-109-PVI-Y-007			Data sheets for UPS, Sizing of UPS and Battery		A	B	FGD	MISCELLANEOUS	PE-C&I	PE-C&I,	317	167
300	0000-109-PVI-Y-008			Data sheets for Battery Charger and sizing of charger and Battery		A	B	FGD	MISCELLANEOUS	PE-C&I	-,	507	357
301	0000-109-PVI-Y-009			Data Sheet/Drawing for SO2 Analyser		A	B	FGD	MISCELLANEOUS	PE-C&I	-,	455	305
302	0000-109-PVI-Y-010			Data Sheet/Drawing for pH Analyser		A	B	FGD	MISCELLANEOUS	PE-C&I	PE-C&I,	455	305
303	0000-109-PVI-Y-011			Datasheet/Drawing for Junction Box		A	B	FGD	MISCELLANEOUS	PE-C&I	PE-C&I,	337	187
304	0000-109-PVI-Y-012			Data Sheet of Operator Desk and Computer furniture		A	B	FGD	MISCELLANEOUS	PE-C&I	PE-C&I,	322	172
305	0000-109-PVI-Y-013			Datasheet for Optical Fiber Cable		A	B	FGD	MISCELLANEOUS	PE-C&I	PE-C&I,	337	187
306	0000-109-PVI-Y-014			Datasheet/Drawing for RTD -TT- JB		A	B	FGD	MISCELLANEOUS	PE-C&I	PE-C&I,	337	187
307	0000-109-PVI-Y-015			Datasheet of Electronic Transmitter		A	B	FGD	MISCELLANEOUS	PE-C&I	PE-C&I,	303	153
308	0000-109-PVI-Y-016			Datasheet & GA Drawing of Pressure Gauge, Chemical Seal Pressure Gauge		A	B	FGD	MISCELLANEOUS	PE-C&I	PE-C&I,	508	358
309	0000-109-PVI-Y-017			Datasheet & GA Drawing of Temperature Gauge		A	B	FGD	MISCELLANEOUS	PE-C&I	PE-C&I,	508	358
310	0000-109-PVI-Y-018			Datasheet & GA Drawing of Level Gauge with scale & Reflex type Level Gauge		A	B	FGD	MISCELLANEOUS	PE-C&I	PE-C&I,	508	358

S. No.	NTPC_DRG_NO	Rev_drg_no_for_inouhse_drg	TO_BE_SHIFTED_TO_PACKAGE	DRG_TITLE	PROJECT_SPECIFC_INFORMATION	DRG_PURPOSE	DRG_TYPE	AREA	MILESTONE	CUSTODIAN	REVIEWERS	SUB_FROM_MP_AWARD	SUB_FROM_FGD_AWARD
311	0000-109-PVI-Y-019			Datasheet & GA Drawing of Pressure Switch & DP Switch		A	B	FGD	MISCELLANEOUS	PE-C&I	PE-C&I,	508	358
312	0000-109-PVI-Y-020			Datasheet & GA Drawing of RTD with Thermowell		A	B	FGD	MISCELLANEOUS	PE-C&I	PE-C&I,	508	358
313	0000-109-PVI-Y-021			Datasheet & GA Drawing of Pressure Transmitter & Chemical Seal Pressure Transmitter		A	B	FGD	MISCELLANEOUS	PE-C&I	-,	508	358
314	0000-109-PVI-Y-022			Datasheet & GA Drawing of Temperature Transmitter		A	B	FGD	MISCELLANEOUS	PE-C&I	PE-C&I,	508	358
315	0000-109-PVI-Y-023			Datasheet & GA Drawing of Ultrasonic Level Transmitter		A	B	FGD	MISCELLANEOUS	PE-C&I	PE-C&I,	508	358
316	0000-109-PVI-Y-024			Datasheet & GA Drawing of DP type Level Transmitter		A	B	FGD	MISCELLANEOUS	PE-C&I	-,	508	358
317	0000-109-PVI-Y-025			Datasheet & GA Drawing of Magnetic Flow Meter		A	B	FGD	MISCELLANEOUS	PE-C&I	PE-C&I,	508	358
318	0000-109-PVI-Y-026			Datasheet & GA Drawing of Coriolis Density Meter		A	B	FGD	MISCELLANEOUS	PE-C&I	PE-C&I,	508	358
319	0000-109-PVI-Y-027			Datasheet & GA Drawing of DP type Flow Transmitter for Water		A	B	FGD	MISCELLANEOUS	PE-C&I	-,	508	358
320	0000-109-PVI-Y-028			Datasheet & GA Drawing of DP type Flow Transmitter for Flue Gas & Air		A	B	FGD	MISCELLANEOUS	PE-C&I	-,	508	358
321	0000-109-PVI-Y-029			Datasheet & GA Drawing of Vibration Transmitter		A	B	FGD	MISCELLANEOUS	PE-C&I	PE-C&I,	508	358
322	0000-109-PVI-Y-030			Datasheet & GA Drawing of GI Conduit		A	B	FGD	MISCELLANEOUS	PE-C&I	PE-C&I,	508	358
323	0000-109-PVI-Y-031			Drawing and Datasheet for Universal HART Communicator		A	B	FGD	MISCELLANEOUS	PE-C&I	PE-C&I,	508	358
324	0000-109-PVI-Y-032			DATA SHEET / BOM / GA / SCHEMATIC / SAMPLING DRG FOR SOX/NOX/CO2/CO ANALYZERS AND ASSOCIATED SYSTEM OF CEMS		A	D	FGD	MISCELLANEOUS	PE-C&I	PE-C&I,	508	358
325	0000-109-PVI-Y-033			DATA SHEET / BOM / GA / SCHEMATIC / SAMPLING DRG FOR DUST DENSITY/SPM ANALYSER AND ASSOCIATED SYSTEM OF CEMS		A	D	FGD	MISCELLANEOUS	PE-C&I	PE-C&I,	508	358
326	0000-109-PVI-Y-034			DATA SHEET / BOM / GA / SCHEMATIC / SAMPLING DRG FOR MERCURY ANALYSER AND ASSOCIATED SYSTEM OF CEMS		A	D	FGD	MISCELLANEOUS	PE-C&I	PE-C&I,	508	358
327	0000-109-PVI-Y-035			DATA SHEET / BOM / GA / SCHEMATIC / SAMPLING DRG FOR FLUE GAS FLOWMETER AND ASSOCIATED SYSTEM OF CEMS		A	D	FGD	MISCELLANEOUS	PE-C&I	PE-C&I,	508	358
328	0000-109-PVI-Y-036			SCHEMATIC DRAWING SHOWING INTERFACING OF CEMS ANALYSERS WITH DDCMIS AND CLOUD SERVER		A	D	FGD	MISCELLANEOUS	PE-C&I	PE-C&I,	508	358
329	0000-109-PVI-Y-037			GA OF CHIMNEY INDICAING SAMPLING PORT/ TAPPINGS FOR FLUE GAS ANALYSERS (CEMS MEASUREMENTS)		A	D	FGD	MISCELLANEOUS	PE-C&I	PE-C&I,	508	358
330	0000-109-PVI-Y-038			Commissioning procedure/manual for CEMS.		A	D	FGD	MISCELLANEOUS	PE-C&I	PE-C&I,	508	358
331	0000-109-PVI-Y-039			O&M manual for CEMS.		A	D	FGD	MISCELLANEOUS	PE-C&I	PE-C&I,	508	358
332	0000-109-PVI-Y-040			Erection drawing including erection procedure for CEMS		A	D	FGD	MISCELLANEOUS	PE-C&I	PE-C&I,	508	358
333	0000-109-PVI-Y-041			Datasheet of analyser for ZLD system		A	D	FGD	MISCELLANEOUS	PE-C&I	PE-C&I,	508	358
334	0000-109-PVM-B-001			General Arrangement drawing of Elevator		I	B	FGD	MISCELLANEOUS	PE-Mech/SG	PE-Mech/SG,PE-Mech/Layout,PE-Civil,PE-Electrical,	272	122

S. No.	NTPC_DRG_NO	Rev_drg_no_for_inouhse_drg	TO_BE_SHIFTED_TO_PACKAGE	DRG_TITLE	PROJECT_SPECIFC_INFORMATION	DRG_PURPOSE	DRG_TYPE	AREA	MILESTONE	CUSTODIAN	REVIEWERS	SUB_FROM_MP_AWARD	SUB_FROM_FGD_AWARD
335	0000-109-PVM-B-002			General Arrangement & Data Sheet of Mill Hydro Cyclone		I	B	FGD	MISCELLANEOUS	PE-Mech/SG	PE-Mech/SG,PE-Mech/Layout,PE-Civil,PE-Civil,	308	158
336	0000-109-PVM-B-003			General Arrangement of Mill circuit Tank		I	B	FGD	MISCELLANEOUS	PE-Mech/SG	PE-Mech/SG,PE-Mech/Layout,PE-C&I,PE-Civil,	317	167
337	0000-109-PVM-B-004			General Arrangement of Limestone Pulverizer(Wet ball Mill)		A	B	FGD	MISCELLANEOUS	PE-Mech/SG	PE-Mech/SG,PE-Mech/Layout,PE-Civil,PE-Electrical,	259	109
338	0000-109-PVM-B-005			General Arrangement for Cake wash Water Tank		I	B	FGD	MISCELLANEOUS	PE-Mech/SG	PE-Mech/SG,PE-Mech/Layout,PE-Civil,PE-C&I,	257	107
339	0000-109-PVM-B-006			General Arrangement for Cake wash Pump		I	B	FGD	MISCELLANEOUS	PE-Mech/SG	PE-Mech/SG,PE-Mech/Layout,PE-Civil,PE-C&I,PE-Electrical,	257	107
340	0000-109-PVM-B-009			General Arrangement of GGH and Its auxiliries		A	B	FGD	MISCELLANEOUS	PE-Mech/SG	PE-Mech/SG,PE-Mech/Layout,PE-Civil,PE-Civil,	237	87
341	0000-109-PVM-B-010			General Arrangement for Absorber		A	A	FGD	MISCELLANEOUS	PE-Mech/SG	PE-Mech/SG,PE-Mech/Layout,PE-Civil,PE-Civil,PE-Electrical,	181	31
342	0000-109-PVM-B-011			General Arrangement for Slurry Recirculation Pumps		A	B	FGD	MISCELLANEOUS	PE-Mech/SG	PE-Mech/SG,PE-Mech/Layout,PE-Civil,PE-Electrical,	230	80
343	0000-109-PVM-B-012			General Arrangement for Oxidation Air Blower		A	B	FGD	MISCELLANEOUS	PE-Mech/SG	PE-Mech/SG,PE-Mech/Layout,PE-Civil,PE-Electrical,	251	101
344	0000-109-PVM-B-013			General Arrangement for Gypsum Dewatering Pump(Gypsum Bleed Pump)		I	B	FGD	MISCELLANEOUS	PE-Mech/SG	PE-Mech/SG,PE-Mech/Layout,PE-Civil,PE-Electrical,	250	100
345	0000-109-PVM-B-014			General Arrangement for Limestone slurry pumps		I	B	FGD	MISCELLANEOUS	PE-Mech/SG	PE-Mech/SG,PE-Mech/Layout,PE-Civil,PE-Electrical,	250	100
346	0000-109-PVM-B-015			General Arrangement of Limestone slurry storage tank		A	D	FGD	MISCELLANEOUS	PE-Mech/SG	PE-Mech/SG,PE-Mech/Layout,PE-Civil,PE-C&I,	217	67
347	0000-109-PVM-B-016			General Arrangement of Secondary Hydro-cyclone Feed Tank		I	D	FGD	MISCELLANEOUS	PE-Mech/SG	PE-Mech/SG,PE-Mech/Layout,PE-Civil,PE-C&I,	217	67
348	0000-109-PVM-B-017			General Arrangement of Secondary Hydro-cyclone Pumps		I	B	FGD	MISCELLANEOUS	PE-Mech/SG	PE-Mech/SG,PE-Mech/Layout,PE-Civil,PE-Electrical,	264	114
349	0000-109-PVM-B-018			General Arrangement & Data Sheet of Mill Recycle Pump		I	B	FGD	MISCELLANEOUS	PE-Mech/SG	PE-Mech/SG,PE-Mech/Layout,PE-Civil,PE-Electrical,	308	158
350	0000-109-PVM-B-020			GA of Primary Dewaterng Hydorcyclone		I	B	FGD	MISCELLANEOUS	PE-Mech/SG	PE-Mech/SG,PE-Mech/Layout,PE-Civil,PE-Civil,	250	100
351	0000-109-PVM-B-021			General Arrangement of Limestone Day Silos		I	D	FGD	MISCELLANEOUS	PE-Mech/SG	PE-Mech/SG,PE-Mech/Layout,PE-Civil,PE-Civil,PE-Mech/MH,PE-Mech/MH,	292	142
352	0000-109-PVM-B-022			General Arrangement of Vacuum Belt filters		A	B	FGD	MISCELLANEOUS	PE-Mech/SG	PE-Mech/SG,PE-Mech/Layout,PE-Mech/MH,PE-Mech/MH,PE-Electrical,	268	118

S. No.	NTPC_DRG_NO	Rev_drg_no_for_inouhse_drg	TO_BE_SHIFTED_TO_PACKAGE	DRG_TITLE	PROJECT_SPECIFC_INFORMATION	DRG_PURPOSE	DRG_TYPE	AREA	MILESTONE	CUSTODIAN	REVIEWERS	SUB_FROM_MP_AWARD	SUB_FROM_FGD_AWARD
353	0000-109-PVM-B-023			General Arrangement of Filtrate Water Tank		I	D	FGD	MISCELLANEOUS	PE-Mech/SG	PE-Mech/SG,PE-Mech/Layout,PE-Civil,PE-C&I,	217	67
354	0000-109-PVM-B-024			General Arrangement of Filtrate Water Pumps		I	B	FGD	MISCELLANEOUS	PE-Mech/SG	PE-Mech/SG,PE-Mech/Layout,PE-Civil,PE-Electrical,	257	107
355	0000-109-PVM-B-025			General Arrangement OF Emergency Quench Water Tank		A	D	FGD	MISCELLANEOUS	PE-Mech/SG	PE-Mech/SG,PE-Mech/Layout,PE-Civil,PE-C&I,	224	74
356	0000-109-PVM-B-026			General Arrangement of Secondary Hydrocyclone		I	B	FGD	MISCELLANEOUS	PE-Mech/SG	PE-Mech/SG,PE-Mech/Layout,PE-Civil,PE-Civil,	250	100
357	0000-109-PVM-B-027			General Arrangement of Waste Water Tank		I	D	FGD	MISCELLANEOUS	PE-Mech/SG	PE-Mech/SG,PE-Mech/Layout,PE-Civil,PE-C&I,	217	67
358	0000-109-PVM-B-028			General Arrangement of Waste Water Pumps		I	B	FGD	MISCELLANEOUS	PE-Mech/SG	PE-Mech/SG,PE-Mech/Layout,PE-Civil,PE-Electrical,	264	114
359	0000-109-PVM-B-029			General Arrangement of Process (Make up) Water Tank		I	D	FGD	MISCELLANEOUS	PE-Mech/SG	PE-Mech/SG,PE-Mech/Layout,PE-Civil,PE-C&I,	217	67
360	0000-109-PVM-B-030			General Arrangement of Water Pump		I	B	FGD	MISCELLANEOUS	PE-Mech/SG	PE-Mech/SG,PE-Civil,PE-Electrical,	243	93
361	0000-109-PVM-B-031			General Arrangement of Auxiliary Absorbent (Storage) Tank		A	D	FGD	MISCELLANEOUS	PE-Mech/SG	PE-Mech/SG,PE-Mech/Layout,PE-Civil,PE-C&I,	224	74
362	0000-109-PVM-B-032			General Arrangement of Auxiliary Absorbent (Storage Return) Pump		I	B	FGD	MISCELLANEOUS	PE-Mech/SG	PE-Mech/SG,PE-Mech/Layout,PE-Civil,PE-Electrical,	250	100
363	0000-109-PVM-B-033			General Arrangement of Expansion Joints		I	B	FGD	MISCELLANEOUS	PE-Mech/SG	PE-Mech/SG,PE-Mech/Layout,PE-Civil,PE-Electrical,	269	119
364	0000-109-PVM-B-034			General Arrangement of Agitator for Absorber Reaction Tank		A	B	FGD	MISCELLANEOUS	PE-Mech/SG	PE-Mech/SG,PE-Mech/Layout,PE-Civil,PE-C&I,PE-Electrical,	308	158
365	0000-109-PVM-B-035			General Arrangement Bag Filter for Limestone Day Silos		I	B	FGD	MISCELLANEOUS	PE-Mech/SG	PE-Mech/SG,PE-Mech/Layout,PE-Civil,PE-C&I,	278	128
366	0000-109-PVM-B-036			Arrangement of Stairs and Platforms - Absorber		A	D	FGD	MISCELLANEOUS	PE-Mech/SG	PE-Mech/SG,PE-Mech/Layout,PE-Civil,	236	86
367	0000-109-PVM-B-037			General Arrangement for Booster fan		A	B	FGD	MISCELLANEOUS	PE-Mech/SG	PE-Mech/SG,PE-Mech/Layout,PE-Civil,PE-C&I,	223	73
368	0000-109-PVM-B-038			GA & Datasheet for Pipe Expansion Joint		A	B	FGD	MISCELLANEOUS	PE-Mech/SG	PE-Mech/SG,	551	401
369	0000-109-PVM-B-042			GA of Instrument air receiver		I	B	FGD	MISCELLANEOUS	PE-Mech/SG	PE-Mech/SG,PE-Mech/Layout,PE-Civil,PE-C&I,PE-Mech/WS,	306	156
370	0000-109-PVM-B-043			GA of Service air receiver		I	B	FGD	MISCELLANEOUS	PE-Mech/SG	PE-Mech/SG,PE-Mech/Layout,PE-Civil,PE-C&I,PE-Mech/WS,	306	156
371	0000-109-PVM-B-045			General arrangement of Recycle Pump & Oxidation Blower Building		A	D	FGD	MISCELLANEOUS	PE-Mech/SG	PE-Mech/SG,PE-Mech/Layout,PE-Civil,PE-C&I,PE-Civil,PE-Electrical,Architecture,	265	115

S. No.	NTPC_DRG_NO	Rev_drg_no_for_inouhse_drg	TO_BE_SHIFTED_TO_PACKAGE	DRG_TITLE	PROJECT_SPECIFC_INFORMATION	DRG_PURPOSE	DRG_TYPE	AREA	MILESTONE	CUSTODIAN	REVIEWERS	SUB_FROM_MP_AWARD	SUB_FROM_FGD_AWARD
372	0000-109-PVM-B-046			General arrangement of Dewatering building		A	D	FGD	MISCELLANEOUS	PE-Mech/SG	PE-Mech/SG,PE-Mech/Layout,PE-Civil,PE-Electrical,Architecture,PE-Mech/WS,	258	108
373	0000-109-PVM-B-047			General arrangement of Ball Mill Building		A	D	FGD	MISCELLANEOUS	PE-Mech/SG	PE-Mech/SG,PE-Mech/Layout,PE-Civil,PE-Electrical,Architecture,PE-Mech/WS,PE-Civil,PE-C&I,	271	121
374	0000-109-PVM-B-049			General Layout of FGD Ducting		A	D	FGD	MISCELLANEOUS	PE-Mech/SG	PE-Mech/SG,PE-Mech/Layout,PE-Civil,PE-Civil,	322	172
375	0000-109-PVM-B-050			General Layout of Pipe rack/trestle & Cable ways		A	D	FGD	MISCELLANEOUS	PE-Mech/SG	PE-Mech/SG,PE-Mech/Layout,PE-Civil,PE-Electrical,	292	142
376	0000-109-PVM-B-056			General Arrangement & Data sheet of Waste Water Tank Agitator		A	D	FGD	MISCELLANEOUS	PE-Mech/SG	PE-Mech/SG,	292	142
377	0000-109-PVM-B-057			General Arrangement & Data Sheet of Mill Tank Agitator		A	D	FGD	MISCELLANEOUS	PE-Mech/SG	PE-Mech/SG,	292	142
378	0000-109-PVM-B-058			General Arrangement & Data Sheet of Limestone Weigh Feeder		A	D	FGD	MISCELLANEOUS	PE-Mech/SG	PE-Mech/SG,PE-Mech/MH,PE-C&I,	292	142
379	0000-109-PVM-B-059			Documents for Seal Air System of Guillotine Damper		A	D	FGD	MISCELLANEOUS	PE-Mech/SG	PE-Mech/SG,PE-C&I,	292	142
380	0000-109-PVM-B-060			GA & Data Sheet for Air Cannon		A	D	FGD	MISCELLANEOUS	PE-Mech/SG	PE-Mech/SG,PE-Electrical,PE-C&I,	292	142
381	0000-109-PVM-B-066			GA & Data Sheet for Butterfly Valves		A	D	FGD	MISCELLANEOUS	PE-Mech/SG	PE-Mech/SG,PE-Mech/MH,PE-C&I,PE-Electrical,	292	142
382	0000-109-PVM-B-067			GA & Data Sheet for GLOBE VALVES		A	D	FGD	MISCELLANEOUS	PE-Mech/SG	PE-Mech/SG,	292	142
383	0000-109-PVM-B-068			GA & Data Sheet for BALL VALVES		A	D	FGD	MISCELLANEOUS	PE-Mech/SG	PE-Mech/SG,PE-C&I,	292	142
384	0000-109-PVM-B-069			GA & Data Sheet for GATE VALVES		A	D	FGD	MISCELLANEOUS	PE-Mech/SG	PE-Mech/SG,	292	142
385	0000-109-PVM-B-070			GA & Data Sheet for CHECK VALVES		A	D	FGD	MISCELLANEOUS	PE-Mech/SG	PE-Mech/SG,PE-Mech/MH,	292	142
386	0000-109-PVM-B-071			GA & Data sheet for Control Valves (including ceramic ball control valves)		A	D	FGD	MISCELLANEOUS	PE-Mech/SG	PE-Mech/SG,PE-Mech/MH,PE-C&I,PE-Electrical,	292	142
387	0000-109-PVM-B-072			GA Drawing & Datasheet of 12T Hoist for Ball Mill Building		A	D	FGD	MISCELLANEOUS	PE-Mech/SG	PE-Mech/SG,PE-C&I,PE-Electrical,	292	142
388	0000-109-PVM-B-073			GA & Datasheet of 25T Hoist		A	D	FGD	MISCELLANEOUS	PE-Mech/SG	PE-Mech/SG,PE-C&I,PE-Electrical,PE-Mech/MH,	292	142
389	0000-109-PVM-B-074			GA & Datasheet of Condensate System of Chimney		A	D	FGD	MISCELLANEOUS	PE-Mech/SG	PE-Mech/SG,PE-Mech/WS	306	156
390	0000-109-PVM-F-001			P&ID- Flue Gas Ducting and Dampers System		A	A	FGD	MISCELLANEOUS	PE-Mech/SG	PE-Mech/SG,PE-C&I,PE-Electrical,	199	49
391	0000-109-PVM-F-002			P&ID- Booster fan Lube oil system		A	A	FGD	MISCELLANEOUS	PE-Mech/SG	PE-Mech/SG,PE-C&I,PE-Electrical,	199	49
392	0000-109-PVM-F-003			P&ID - GGH and its auxiliaries		A	A	FGD	MISCELLANEOUS	PE-Mech/SG	PE-Mech/SG,PE-C&I,PE-Electrical,	199	49
393	0000-109-PVM-F-004			P&ID - Absorber		A	A	FGD	MISCELLANEOUS	PE-Mech/SG	PE-Mech/SG,PE-C&I,PE-Electrical,	199	49
394	0000-109-PVM-F-005			P&ID - Recycle Pumps		A	A	FGD	MISCELLANEOUS	PE-Mech/SG	PE-Mech/SG,PE-C&I,PE-Electrical,	199	49
395	0000-109-PVM-F-006			P&ID - Gypsum Bleed Pumps		A	A	FGD	MISCELLANEOUS	PE-Mech/SG	PE-Mech/SG,PE-C&I,PE-Electrical,	199	49
396	0000-109-PVM-F-007			P&ID - Mist Eliminator Wash Water System		A	A	FGD	MISCELLANEOUS	PE-Mech/SG	PE-Mech/SG,PE-C&I,PE-Electrical,	199	49

S. No.	NTPC_DRG_NO	Rev_drg_no_for_inouhse_drg	TO_BE_SHIFTED_TO_PACKAGE	DRG_TITLE	PROJECT_SPECIFC_INFORMATION	DRG_PURPOSE	DRG_TYPE	AREA	MILESTONE	CUSTODIAN	REVIEWERS	SUB_FROM_MP_AWARD	SUB_FROM_FGD_AWARD
397	0000-109-PVM-F-008			P&ID - Absorber area Sumps		A	A	FGD	MISCELLANEOUS	PE-Mech/SG	PE-Mech/SG,PE-C&I,PE-Electrical,	199	49
398	0000-109-PVM-F-009			P&ID - Auxiliary Storage Tank & Pumps		A	A	FGD	MISCELLANEOUS	PE-Mech/SG	PE-Mech/SG,PE-C&I,PE-Electrical,	199	49
399	0000-109-PVM-F-010			P&ID - Oxidation Air Blower system		A	A	FGD	MISCELLANEOUS	PE-Mech/SG	PE-Mech/SG,PE-C&I,PE-Electrical,	199	49
400	0000-109-PVM-F-011			P&ID - Primary Dewatering System		A	A	FGD	MISCELLANEOUS	PE-Mech/SG	PE-Mech/SG,PE-C&I,PE-Electrical,	199	49
401	0000-109-PVM-F-012			P&ID - Dewatering area sump & pump		A	A	FGD	MISCELLANEOUS	PE-Mech/SG	PE-Mech/SG,PE-C&I,PE-Electrical,	199	49
402	0000-109-PVM-F-013			P&ID - Secondary Dewatering System		A	A	FGD	MISCELLANEOUS	PE-Mech/SG	PE-Mech/SG,PE-Electrical,PE-Mech/MH,PE-C&I,	199	49
403	0000-109-PVM-F-014			P&ID - Waste Water Discharge System		A	A	FGD	MISCELLANEOUS	PE-Mech/SG	PE-Mech/SG,PE-C&I,PE-Electrical,	199	49
404	0000-109-PVM-F-015			P&ID - Filtrate Water System		A	A	FGD	MISCELLANEOUS	PE-Mech/SG	PE-Mech/SG,PE-C&I,PE-Electrical,	199	49
405	0000-109-PVM-F-016			P&ID - Limestone Silo		A	A	FGD	MISCELLANEOUS	PE-Mech/SG	PE-Mech/SG,PE-C&I,PE-Electrical,	199	49
406	0000-109-PVM-F-017			P&ID - Reagent Preparation System		A	A	FGD	MISCELLANEOUS	PE-Mech/SG	PE-Mech/SG,PE-C&I,PE-Electrical,	199	49
407	0000-109-PVM-F-018			P&ID - Reagent Feed Tank and Pumps		A	A	FGD	MISCELLANEOUS	PE-Mech/SG	PE-Mech/SG,PE-C&I,PE-Electrical,	199	49
408	0000-109-PVM-F-019			P&ID - Reagent Preparation area Sump & Pump		A	A	FGD	MISCELLANEOUS	PE-Mech/SG	PE-Mech/SG,PE-C&I,PE-Electrical,	199	49
409	0000-109-PVM-F-020			P&ID - Make up Water Booster Pumps		A	A	FGD	MISCELLANEOUS	PE-Mech/SG	PE-Mech/SG,PE-C&I,PE-Electrical,	199	49
410	0000-109-PVM-F-021			P&ID - Process (Make up) Water Tank & Pumps		A	A	FGD	MISCELLANEOUS	PE-Mech/SG	PE-Mech/SG,PE-C&I,PE-Electrical,	199	49
411	0000-109-PVM-F-022			P&ID - Emergency Quench system		A	A	FGD	MISCELLANEOUS	PE-Mech/SG	PE-Mech/SG,PE-C&I,PE-Electrical,	199	49
412	0000-109-PVM-F-023			P&ID - Water Distribution		A	A	FGD	MISCELLANEOUS	PE-Mech/SG	PE-Mech/SG,PE-C&I,PE-Electrical,	199	49
413	0000-109-PVM-F-024			P&ID - Air Distribution		A	A	FGD	MISCELLANEOUS	PE-Mech/SG	PE-Mech/SG,PE-C&I,PE-Electrical,	199	49
414	0000-109-PVM-F-025			P&ID - Legends & Notes		A	A	FGD	MISCELLANEOUS	PE-Mech/SG	PE-Mech/SG,PE-C&I,PE-Electrical,	199	49
415	0000-109-PVM-F-026			P&ID - Neutralisation Tank		A	A	FGD	MISCELLANEOUS	PE-Mech/SG	PE-Mech/SG,PE-C&I,PE-Electrical,	199	49
416	0000-109-PVM-F-027			P&ID - Cooling Water Distribution		A	A	FGD	MISCELLANEOUS	PE-Mech/SG	PE-Mech/SG,PE-C&I,PE-Electrical,	199	49
417	0000-109-PVM-F-028			P&ID - Oxidation Blower		A	A	FGD	MISCELLANEOUS	PE-Mech/SG	PE-Mech/SG,PE-C&I,PE-Electrical,	199	49
418	0000-109-PVM-F-029			P&ID of Vacuum Belt filter & Primary Hydrocyclone		A	A	FGD	MISCELLANEOUS	PE-Mech/SG	PE-Mech/SG,PE-C&I,PE-Electrical,	199	49
419	0000-109-PVM-F-030			P&ID for Limestone Pulverizer-Wet Ball Mill Lubrication system		A	A	FGD	MISCELLANEOUS	PE-Mech/SG	PE-Mech/SG,PE-C&I,PE-Electrical,	199	49
420	0000-109-PVM-F-031			P&ID for Compressed Air System for Bag Filter Pulsing		A	A	FGD	MISCELLANEOUS	PE-Mech/SG	PE-Mech/SG,PE-C&I,PE-Electrical,	199	49
421	0000-109-PVM-F-044			Plant Layout of FGD System - Sheet 1		A	-	FGD	MISCELLANEOUS	PE-Mech/SG	PE-Civil,PE-Mech/Layout,PE-C&I,PE-Electrical,PE-Mech/SG,PE-Mech/MH,PE-Mech/MH,PE-Civil,	160	10

S. No.	NTPC_DRG_NO	Rev_drg_no_for_inouhse_drg	TO_BE_SHIFTED_TO_PACKAGE	DRG_TITLE	PROJECT_SPECIFC_INFORMATION	DRG_PURPOSE	DRG_TYPE	AREA	MILESTONE	CUSTODIAN	REVIEWERS	SUB_FROM_MP_AWARD	SUB_FROM_FGD_AWARD
422	0000-109-PVM-F-045			Plant Layout of FGD System - Sheet 2		A	-	FGD	MISCELLANEOUS	PE-Mech/SG	PE-Civil,PE-Mech/Layout,PE-C&I,PE-Electrical,PE-Mech/SG,PE-Civil,PE-Mech/MH,PE-Mech/MH,	160	10
423	0000-109-PVM-H-001			Painting schedule of FGD System		A	A	FGD	MISCELLANEOUS	PE-Mech/SG	PE-Mech/SG,PE-Civil,PE-Civil,PE-Mech/MH,PE-Electrical,	222	72
424	0000-109-PVM-H-002			Valve Schedules		I	D	FGD	MISCELLANEOUS	PE-Mech/SG	PE-Mech/SG,PE-C&I,PE-Electrical,	271	121
425	0000-109-PVM-H-003			Pipe Schedule		I	D	FGD	MISCELLANEOUS	PE-MECH	PE-Mech/SG,PE-C&I,PE-Electrical,	292	142
426	0000-109-PVM-H-004			Insulation Schedule		I	D	FGD	MISCELLANEOUS	PE-Mech/SG	PE-Mech/SG,	272	122
427	0000-109-PVM-H-005			Expansion Joint Schedule		I	D	FGD	MISCELLANEOUS	PE-Mech/SG	PE-Mech/SG,	272	122
428	0000-109-PVM-L-001			Process Flow Diagram of FGD System		A	A	FGD	MISCELLANEOUS	PE-Mech/SG	PE-Mech/SG,PE-C&I,	160	10
429	0000-109-PVM-L-038			General Arrangement for Piping - FGD area (Absorber, Recycle Pump, GGH & Aux storage tank area etc)		I	D	FGD	MISCELLANEOUS	PE-Mech/SG	PE-Mech/SG,PE-Mech/Layout,PE-Civil,	292	142
430	0000-109-PVM-L-039			General Arrangement for Piping - Lime Preparation Area (Ball Mill & Lime handling area etc)		I	D	FGD	MISCELLANEOUS	PE-Mech/SG	PE-Mech/SG,PE-Mech/Layout,PE-Civil,	292	142
431	0000-109-PVM-L-040			General Arrangement for Piping - Dewatering area (Beltfilter and Hydrocyclone area etc)		I	D	FGD	MISCELLANEOUS	PE-Mech/SG	PE-Mech/SG,PE-Mech/Layout,PE-Civil,	290	140
432	0000-109-PVM-N-001			Performance Curve for BOOSTER FANS		A	B	FGD	MISCELLANEOUS	PE-Mech/SG	PE-Mech/SG,	223	73
433	0000-109-PVM-R-002			Oxidation Blower - Sub QR documents of M/s ITO, Japan		A	A	FGD	MISCELLANEOUS	PE-Mech/SG	PE-Mech/SG,	196	46
434	0000-109-PVM-R-004			Wet Limestone Grinding Mills (Ball Mills) - Sub QR documents of M/s Thysencrupp, Germany		A	A	FGD	MISCELLANEOUS	PE-Mech/SG	PE-Mech/SG,	196	46
435	0000-109-PVM-R-005			Recirculation Slurry Pump - Sub QR documents of M/s DUCHTING PUMPEN, GERMANY		A	A	FGD	MISCELLANEOUS	PE-Mech/SG	PE-Mech/SG,	196	46
436	0000-109-PVM-R-006			Booster Fan - Sub QR documents of M/s Solyvent Flakt AB, Sweden		A	A	FGD	MISCELLANEOUS	PE-Mech/SG	PE-Mech/SG,	196	46
437	0000-109-PVM-R-007			Slurry Pump - Sub QR documents of M/s Duchting Pumpen, Germany		A	A	FGD	MISCELLANEOUS	PE-Mech/SG	PE-Mech/SG,	196	46
438	0000-109-PVM-R-008			Wet Limestone Grinding Mills (Ball Mills) - Sub QR documents of M/s Metso, USA		A	A	FGD	MISCELLANEOUS	PE-Mech/SG	PE-Mech/SG,	196	46
439	0000-109-PVM-R-009			Agitators - Sub QR documents of M/s EKATO RMT GMBH. Germany		A	A	FGD	MISCELLANEOUS	PE-Mech/SG	PE-Mech/SG,	196	46
440	0000-109-PVM-R-010			Vaccume Belt Filters - Sub QR documents of M/s Shanghai Xuhe Environmental Technology Co. Ltd., Shanghai, China		A	A	FGD	MISCELLANEOUS	PE-Mech/SG	PE-Mech/SG,	196	46
441	0000-109-PVM-R-012			Vaccume Belt Filters - Sub QR documents of M/s FLSmidth, USA		A	A	FGD	MISCELLANEOUS	PE-Mech/SG	PE-Mech/SG,	196	46
442	0000-109-PVM-R-013			Agitators - Sub QR documents of M/s Zhejiang Greatwall Reducer Mfg Co. Ltd.		A	A	FGD	MISCELLANEOUS	PE-Mech/SG	PE-Mech/SG,	196	46
443	0000-109-PVM-R-014			Gas to Gas Heat Exchanger (GGH) - Sub QR documents		A	A	FGD	MISCELLANEOUS	PE-Mech/SG	PE-Mech/SG,	196	46
444	0000-109-PVM-R-015			Slurry Pump - Sub QR documents of M/s Weir Minerals, USA		A	A	FGD	MISCELLANEOUS	PE-Mech/SG	PE-Mech/SG,	196	46
445	0000-109-PVM-R-016			Slurry Pump - Sub QR documents of M/s Sam Turbo Industries Pvt. Ltd., Koimbatoor		A	A	FGD	MISCELLANEOUS	PE-Mech/SG	PE-Mech/SG,	196	46

S. No.	NTPC_DRG_NO	Rev_drg_no_for_inouhse_drg	TO_BE_SHIFTED_TO_PACKAGE	DRG_TITLE	PROJECT_SPECIFC_INFORMATION	DRG_PURPOSE	DRG_TYPE	AREA	MILESTONE	CUSTODIAN	REVIEWERS	SUB_FROM_MP_AWARD	SUB_FROM_FGD_AWARD
446	0000-109-PVM-R-017			Booster Fan - Sub QR documents of M/s Suewon Poongryuk Machinery Co. Ltd, Korea		A	A	FGD	MISCELLANEOUS	PE-Mech/SG	PE-Mech/SG,	196	46
447	0000-109-PVM-R-018			Wet Limestone Grinding Mills (Ball Mills) - Sub QR documents of M/s Cemtec, Austria		A	A	FGD	MISCELLANEOUS	PE-Mech/SG	PE-Mech/SG,	196	46
448	0000-109-PVM-R-019			Wet Limestone Grinding Mills (Ball Mills) - Sub QR documents of M/s Christian Pfeiffer Maschinenfabrik¿ Austria		A	A	FGD	MISCELLANEOUS	PE-Mech/SG	PE-Mech/SG,	196	46
449	0000-109-PVM-R-020			Oxidation Air Blower - Sub QR documents of /s Siemens Turbo Machinery / HV Turbo		A	A	FGD	MISCELLANEOUS	PE-Mech/SG	PE-Mech/SG,	196	46
450	0000-109-PVM-U-001			FGD System Design Basis - PROCESS		A	-	FGD	MISCELLANEOUS	PE-Mech/SG	PE-Mech/SG,	160	10
451	0000-109-PVM-U-002			Flue gas system design and Duct Sizing Calculation		A	A	FGD	MISCELLANEOUS	PE-Mech/SG	PE-Mech/SG,	187	37
452	0000-109-PVM-U-003			ABSORBER DESIGN BASIS		A	A	FGD	MISCELLANEOUS	PE-Mech/SG	PE-Mech/SG,	181	31
453	0000-109-PVM-U-004			Sizing Calculation & Selection parameter for GGH		A	B	FGD	MISCELLANEOUS	PE-Mech/SG	PE-Mech/SG,	223	73
454	0000-109-PVM-U-005			Sizing Calculation & Selection parameter for Slurry Recirculation Pumps		A	B	FGD	MISCELLANEOUS	PE-Mech/SG	PE-Mech/SG,	223	73
455	0000-109-PVM-U-006			Sizing Calculation & Selection parameter for Oxidation Air Blower		A	B	FGD	MISCELLANEOUS	PE-Mech/SG	PE-Mech/SG,	251	101
456	0000-109-PVM-U-007			Sizing Calculation& Selection paramete for Emergency Quench Water System		A	B	FGD	MISCELLANEOUS	PE-Mech/SG	PE-Mech/SG,	292	142
457	0000-109-PVM-U-008			Sizing Calculation & Selection parameter for all slurry pumps		A	B	FGD	MISCELLANEOUS	PE-Mech/SG	PE-Mech/SG,	264	114
458	0000-109-PVM-U-009			Sizing Calculation & Selection parameter for all slurry tanks		A	D	FGD	MISCELLANEOUS	PE-Mech/SG	PE-Mech/SG,	292	142
459	0000-109-PVM-U-011			Sizing Calculation& Selection parameter for Wet ball Mill including Motor sizing calculation for Ball Mill		A	B	FGD	MISCELLANEOUS	PE-Mech/SG	PE-Mech/SG,PE-Electrical,	315	165
460	0000-109-PVM-U-012			Sizing Calculation & Selection parameter for Vacuum Belt filters		A	B	FGD	MISCELLANEOUS	PE-Mech/SG	PE-Mech/SG,	237	87
461	0000-109-PVM-U-014			Sizing Calculation & Selection parameter for all Water Pump		A	B	FGD	MISCELLANEOUS	PE-Mech/SG	PE-Mech/SG,	257	107
462	0000-109-PVM-U-015			Sizing Calculation of Limestone day silo		A	D	FGD	MISCELLANEOUS	PE-Mech/SG	PE-Mech/SG,	195	45
463	0000-109-PVM-U-016			Sizing Calculation & Selection parameter for BOOSTER FANS		A	B	FGD	MISCELLANEOUS	PE-Mech/SG	PE-Mech/SG,	223	73
464	0000-109-PVM-U-017			Sizing Calculation & Selection parameter for Sump pumps		A	B	FGD	MISCELLANEOUS	PE-Mech/SG	PE-Mech/SG,	263	113
465	0000-109-PVM-U-018			Sizing calculation of Instrument air receiver		A	B	FGD	MISCELLANEOUS	PE-Mech/SG	PE-Mech/SG,	171	21
466	0000-109-PVM-U-019			Sizing calculation of Service air receiver		A	B	FGD	MISCELLANEOUS	PE-Mech/SG	PE-Mech/SG,	171	21
467	0000-109-PVM-U-020			FGD System Design Basis -MECHANICAL		I	A	FGD	MISCELLANEOUS	PE-Mech/SG	PE-Mech/SG,	202	52
468	0000-109-PVM-U-021			Sizing Calculation for Secondary Hydro-cyclone		A	B	FGD	MISCELLANEOUS	PE-Mech/SG	PE-Mech/SG,	250	100
469	0000-109-PVM-U-022			Design basis (Heat load calculation) for HVAC system		A	D	FGD	MISCELLANEOUS	PE-Mech/WS	PE-Mech/SG,PE-Mech/SG,	292	142
470	0000-109-PVM-U-024			Sizing Calculation& Selection parameter for Limestone Pulverizer(Wet ball Mill) auxiliaries		A	B	FGD	MISCELLANEOUS	PE-Mech/SG	PE-Mech/SG,PE-Electrical,	315	165
471	0000-109-PVM-U-027			Structural Design Basis - Mechanical (Ducts, Silos, Tanks)		A	A	FGD	MISCELLANEOUS	PE-Mech/SG	-,	160	10
472	0000-109-PVM-U-028			DESIGN CRITERIA OF ABSORBER TOWER		A	A	FGD	MISCELLANEOUS	PE-Mech/SG	PE-Mech/SG,	160	10
473	0000-109-PVM-U-029			Quench Sizing Calculation & Selection Parameter		A	D	FGD	MISCELLANEOUS	PE-Mech/SG	PE-Mech/SG,	160	10
474	0000-109-PVM-U-030			Condensate Study for Low Height Chimney		A	D	FGD	MISCELLANEOUS	PE-Mech/SG	PE-Mech/SG,	230	80

S. No.	NTPC_DRG_NO	Rev_drg_no_for_inouhse_drg	TO_BE_SHIFTED_TO_PACKAGE	DRG_TITLE	PROJECT_SPECIFC_INFORMATION	DRG_PURPOSE	DRG_TYPE	AREA	MILESTONE	CUSTODIAN	REVIEWERS	SUB_FROM_MP_AWARD	SUB_FROM_FGD_AWARD
475	0000-109-PVM-W-001			Selection of Material and Application Procedure for FGD plant		A	A	FGD	MISCELLANEOUS	PE-Mech/SG	PE-Mech/SG,	196	46
476	0000-109-PVM-W-002			Mass Flow Balance (Design Points) data		A	A	FGD	MISCELLANEOUS	PE-Mech/SG	PE-Mech/SG,	160	10
477	0000-109-PVM-W-003			Mass Flow Balance (Guarantee Points) data		A	A	FGD	MISCELLANEOUS	PE-Mech/SG	PE-Mech/SG,	160	10
478	0000-109-PVM-W-005			Write-up on & Selection of valves for slurry application		A	A	FGD	MISCELLANEOUS	PE-Mech/SG	PE-Mech/SG,	186	36
479	0000-109-PVM-W-006			Requirements of Instrument air, Service air, Auxiliary steam, Equipment cooling water, etc.. (Utility List)		A	D	FGD	MISCELLANEOUS	PE-Mech/SG	PE-Mech/SG,PE-Mech/WS,Navneet Kumar,Nipun Pharlia,Apurva Srivastava,	271	121
480	0000-109-PVM-W-008			Predicted Performance of FGD System at a) Design Point & b) Guarantee point		I	D	FGD	MISCELLANEOUS	PE-Mech/SG	PE-Mech/SG,	340	190
481	0000-109-PVM-W-010			Performance test procedure		A	D	FGD	MISCELLANEOUS	PE-Mech/SG	PE-Mech/SG,	340	190
482	0000-109-PVM-W-011			Type test procedure for Gates & Dampers		A	B	FGD	MISCELLANEOUS	PE-Mech/SG	PE-Mech/SG,	271	121
483	0000-109-PVM-W-012			Type Test Performance Procedure for BOOSTER FANS		A	B	FGD	MISCELLANEOUS	PE-Mech/SG	PE-Mech/SG,	230	80
484	0000-109-PVM-W-013			Type Test Performance Report for BOOSTER FANS		A	B	FGD	MISCELLANEOUS	PE-Mech/SG	PE-Mech/SG,	250	100
485	0000-109-PVM-W-014			Surface preparation & application procedure for Flake glass lining		I	D	FGD	MISCELLANEOUS	PE-Mech/SG	PE-Mech/SG,	292	142
486	0000-109-PVM-W-015			Surface preparation & application procedure for Rubber lining		I	D	FGD	MISCELLANEOUS	PE-Mech/SG	PE-Mech/SG,	292	142
487	0000-109-PVM-W-016			Leak tightness performance test Report of damper/gates		A	B	FGD	MISCELLANEOUS	PE-Mech/SG	PE-Mech/SG,	292	142
488	0000-109-PVM-W-017			Battery Limits- FGD (to take care all interfaces points among NTPC & Vendor WITH all detail views at terminal points)		I	D	FGD	MISCELLANEOUS	PE-Mech/SG	PE-Mech/SG,PE-C&I,PE-Electrical,PE-Mech/Layout,Navneet Kumar,	292	142
489	0000-109-PVM-W-018			DOCUMENT FOR COLOUR CODING STANDARD		I	D	FGD	MISCELLANEOUS	PE-Mech/SG	PE-Mech/SG,PE-Electrical,PE-Mech/MH,	292	142
490	0000-109-PVM-W-019			DOCUMENT FOR Type Test Report of Dampers		I	D	FGD	MISCELLANEOUS	PE-Mech/SG	PE-Mech/SG,	292	142
491	0000-109-PVM-W-020			Write up on Equipment Handling		I	D	FGD	MISCELLANEOUS	PE-Mech/SG	PE-Mech/SG,	292	142
492	0000-109-PVM-X-001			O & M MANUAL		A	D	FGD	MISCELLANEOUS	PE-Mech/SG	PE-Mech/SG,PE-C&I,PE-C&I,PE-Electrical,	341	191
493	0000-109-PVM-Y-001			Data Sheet for Absorber		A	A	FGD	MISCELLANEOUS	PE-Mech/SG	PE-Mech/SG,PE-Electrical,PE-C&I,PE-C&I,	214	64
494	0000-109-PVM-Y-002			Data Sheet for Booster fans		A	B	FGD	MISCELLANEOUS	PE-Mech/SG	PE-Mech/SG,PE-Electrical,	230	80
495	0000-109-PVM-Y-003			Data Sheet for Agitators for Limestone slurry Storage Tank		A	D	FGD	MISCELLANEOUS	PE-Mech/SG	PE-Mech/SG,PE-Electrical,PE-C&I,PE-C&I,	271	121
496	0000-109-PVM-Y-004			Data Sheet for Agitators for Secondary Hydroclone feed tank		A	D	FGD	MISCELLANEOUS	PE-Mech/SG	PE-Mech/SG,PE-Electrical,PE-C&I,PE-C&I,	271	121
497	0000-109-PVM-Y-005			Data Sheet for Agitators for Auxiliary Absorbent Tank		A	B	FGD	MISCELLANEOUS	PE-Mech/SG	PE-Mech/SG,PE-Electrical,PE-C&I,PE-C&I,	271	121
498	0000-109-PVM-Y-006			Data Sheet for Elevator		A	B	FGD	MISCELLANEOUS	PE-Mech/SG	PE-Mech/SG,PE-Electrical,	272	122
499	0000-109-PVM-Y-007			Data Sheet for GGH and auxiliaries		A	B	FGD	MISCELLANEOUS	PE-Mech/SG	PE-Mech/SG,PE-Electrical,PE-C&I,PE-C&I,	237	87
500	0000-109-PVM-Y-008			Data Sheet for Mist Eliminator		A	B	FGD	MISCELLANEOUS	PE-Mech/SG	PE-Mech/SG,PE-Electrical,PE-C&I,PE-C&I,	264	114
501	0000-109-PVM-Y-009			Data Sheet for Spray Nozzles		A	B	FGD	MISCELLANEOUS	PE-Mech/SG	PE-Mech/SG,PE-Electrical,	230	80
502	0000-109-PVM-Y-011			Data Sheet for Slurry Recirculation Pumps		A	B	FGD	MISCELLANEOUS	PE-Mech/SG	PE-Mech/SG,PE-Electrical,	251	101

S. No.	NTPC_DRG_NO	Rev_drg_no_for_inouhse_drg	TO_BE_SHIFTED_TO_PACKAGE	DRG_TITLE	PROJECT_SPECIFC_INFORMATION	DRG_PURPOSE	DRG_TYPE	AREA	MILESTONE	CUSTODIAN	REVIEWERS	SUB_FROM_MP_AWARD	SUB_FROM_FGD_AWARD
503	0000-109-PVM-Y-012			Data Sheet for Oxidation Air Blower		A	B	FGD	MISCELLANEOUS	PE-Mech/SG	PE-Mech/SG,PE-Electrical,	251	101
504	0000-109-PVM-Y-014			Data Sheet for Gypsum Dewatering Pump (Bleed Pumps)		A	B	FGD	MISCELLANEOUS	PE-Mech/SG	PE-Mech/SG,PE-Electrical,	250	100
505	0000-109-PVM-Y-015			Data Sheet for Limestone slurry pumps		A	B	FGD	MISCELLANEOUS	PE-Mech/SG	PE-Mech/SG,PE-Electrical,	250	100
506	0000-109-PVM-Y-016			Data Sheet for Limestone slurry storage Tank		A	D	FGD	MISCELLANEOUS	PE-Mech/SG	PE-Mech/SG,PE-Electrical,PE-C&I,PE-C&I,	217	67
507	0000-109-PVM-Y-017			Data Sheet for Wet ball mill		A	B	FGD	MISCELLANEOUS	PE-Mech/SG	PE-Mech/SG,PE-Electrical,PE-C&I,PE-C&I,	257	107
508	0000-109-PVM-Y-018			Data sheet for Insulation material		A	B	FGD	MISCELLANEOUS	PE-Mech/SG	PE-Mech/SG,	336	186
509	0000-109-PVM-Y-019			Data sheet for Guillotine gate including sealing system		A	B	FGD	MISCELLANEOUS	PE-Mech/SG	PE-Mech/SG,	271	121
510	0000-109-PVM-Y-020			Data sheet/Vendor catalogue for Flake glass lining		A	B	FGD	MISCELLANEOUS	PE-Mech/SG	PE-Mech/SG,	336	186
511	0000-109-PVM-Y-021			Data sheet//Vendor catalogue for Rubber lining		A	B	FGD	MISCELLANEOUS	PE-Mech/SG	PE-Mech/SG,	332	182
512	0000-109-PVM-Y-022			Data sheet of Agitators for Sumps		A	B	FGD	MISCELLANEOUS	PE-Mech/SG	PE-Mech/SG,PE-Electrical,	271	121
513	0000-109-PVM-Y-023			Data sheet of Agitators for Filtrate water tank		A	B	FGD	MISCELLANEOUS	PE-Mech/SG	PE-Mech/SG,PE-Electrical,PE-C&I,PE-C&I,	271	121
514	0000-109-PVM-Y-025			Data sheet of Limestone Day SILO		A	D	FGD	MISCELLANEOUS	PE-Mech/SG	PE-Mech/SG,PE-Electrical,PE-C&I,PE-C&I,	229	79
515	0000-109-PVM-Y-026			Data sheet of HOISTS/handling system		A	B	FGD	MISCELLANEOUS	PE-Mech/SG	PE-Mech/SG,PE-Electrical,PE-C&I,PE-C&I,	320	170
516	0000-109-PVM-Y-027			SIZING CALCULATION & SELECTION PARAMETER FOR PRIMARY DEWATERING HYDROCYCLONE		A	B	FGD	MISCELLANEOUS	PE-Mech/SG	PE-Mech/SG,PE-Electrical,PE-C&I,PE-C&I,	250	100
517	0000-109-PVM-Y-028			Data Sheet for Auxiliary Storage Tank		A	D	FGD	MISCELLANEOUS	PE-Mech/SG	PE-Mech/SG,PE-Electrical,PE-C&I,PE-C&I,	250	100
518	0000-109-PVM-Y-029			Data Sheet for Vacuum Belt filters and its auxiliries		A	B	FGD	MISCELLANEOUS	PE-Mech/SG	PE-Mech/SG,PE-Electrical,PE-C&I,PE-C&I,	278	128
519	0000-109-PVM-Y-030			Data Sheet for Filtrate Water Tank		A	D	FGD	MISCELLANEOUS	PE-Mech/SG	PE-Mech/SG,PE-Electrical,PE-C&I,PE-C&I,	252	102
520	0000-109-PVM-Y-031			Data Sheet for Filtrate Water Pumps		A	B	FGD	MISCELLANEOUS	PE-Mech/SG	PE-Mech/SG,PE-Electrical,PE-C&I,PE-C&I,	257	107
521	0000-109-PVM-Y-032			Data Sheet for Secondary Hydro-cyclone Feed Tank		A	D	FGD	MISCELLANEOUS	PE-Mech/SG	PE-Mech/SG,PE-Electrical,PE-C&I,PE-C&I,	245	95
522	0000-109-PVM-Y-033			Data Sheet for Secondary Hydro-cyclone Pump		A	B	FGD	MISCELLANEOUS	PE-Mech/SG	PE-Mech/SG,PE-Electrical,PE-C&I,PE-C&I,	264	114
523	0000-109-PVM-Y-034			Data Sheet for Secondary Hydrocyclone		A	B	FGD	MISCELLANEOUS	PE-Mech/SG	PE-Mech/SG,PE-Electrical,PE-C&I,PE-C&I,	264	114
524	0000-109-PVM-Y-035			Data Sheet for Waste Water Tank		A	D	FGD	MISCELLANEOUS	PE-Mech/SG	PE-Mech/SG,PE-Electrical,PE-C&I,PE-C&I,	252	102
525	0000-109-PVM-Y-036			Data Sheet for Waste Water Pump		A	B	FGD	MISCELLANEOUS	PE-Mech/SG	PE-Mech/SG,PE-Electrical,PE-C&I,PE-C&I,	264	114
526	0000-109-PVM-Y-037			General Arrangement & Data Sheet of Lime Dosing System		A	D	FGD	MISCELLANEOUS	PE-Mech/SG	PE-Mech/SG,PE-Electrical,PE-C&I,PE-C&I,	229	79
527	0000-109-PVM-Y-038			Data Sheet for Process Water Tank		A	D	FGD	MISCELLANEOUS	PE-Mech/SG	PE-Mech/SG,PE-Electrical,PE-C&I,PE-C&I,	252	102
528	0000-109-PVM-Y-039			Data Sheet for Water Pump		A	B	FGD	MISCELLANEOUS	PE-Mech/SG	PE-Mech/SG,PE-Electrical,PE-C&I,	257	107
529	0000-109-PVM-Y-042			Data Sheet for Auxiliary Absorbent Pump		A	B	FGD	MISCELLANEOUS	PE-Mech/SG	PE-Mech/SG,PE-Electrical,PE-C&I,PE-C&I,	250	100
530	0000-109-PVM-Y-044			Data Sheet for Sump Pumps		A	B	FGD	MISCELLANEOUS	PE-Mech/SG	PE-Mech/SG,PE-Electrical,PE-C&I,PE-C&I,	264	114

S. No.	NTPC_DRG_NO	Rev_drg_no_for_inouhse_drg	TO_BE_SHIFTED_TO_PACKAGE	DRG_TITLE	PROJECT_SPECIFC_INFORMATION	DRG_PURPOSE	DRG_TYPE	AREA	MILESTONE	CUSTODIAN	REVIEWERS	SUB_FROM_MP_AWARD	SUB_FROM_FGD_AWARD
531	0000-109-PVM-Y-045			Data Sheet for Expansion Joints		A	B	FGD	MISCELLANEOUS	PE-Mech/SG	PE-Mech/SG,	258	108
532	0000-109-PVM-Y-046			Data Sheet for HVAC system		A	B	FGD	MISCELLANEOUS	PE-Mech/WS	PE-Mech/SG,PE-Mech/SG,PE-Electrical,PE-C&I,PE-C&I,	337	187
533	0000-109-PVM-Y-047			Data Sheet for Emergency Quench Tank		A	D	FGD	MISCELLANEOUS	PE-Mech/SG	PE-Mech/SG,PE-Electrical,PE-C&I,PE-C&I,	250	100
534	0000-109-PVM-Y-048			Data Sheet for PIPES		A	D	FGD	MISCELLANEOUS	PE-Mech/SG	PE-Mech/SG,PE-Mech/MH,	250	100
535	0000-109-QVC-G-001			Field Quality Plan for civil work		A	D	FGD	MISCELLANEOUS	QA	QA	223	73
536	0000-109-QVC-G-002			Field Quality Plan for structural work		A	D	FGD	MISCELLANEOUS	QA	QA	233	83
537	0000-109-QVC-Q-001			MQP for gratings		A	B	FGD	MISCELLANEOUS	QA	QA	337	187
538	0000-109-QVC-Q-002			MQP for colour coated cladddding sheet		A	B	FGD	MISCELLANEOUS	QA	QA	337	187
539	0000-109-QVC-Q-003			MQP for colour coated decking sheet		A	B	FGD	MISCELLANEOUS	QA	QA	337	187
540	0000-109-QVC-Q-056			MQP for Vibration Isolation System		A	B	FGD	MISCELLANEOUS	QA	QA	350	200
541	0000-109-QVC-Q-080			MQP for Structural Fabrication		A		FGD		QA-Civil	QA-Civil		
542	0000-109-QVC-Q-082			MQP for Chimney Elevator		A		FGD		QA-Civil	QA-Civil		
543	0000-109-QVE-G-001			Field Quality Plan for Electrical Work		A	D	FGD	MISCELLANEOUS	QA	QA	322	172
544	0000-109-QVE-G-002			Field Quality Plan for Fire Sealing System		A				QA-Elect	QA-Elect		
545	0000-109-QVE-Q-001			MQP for cable tray		A	B	FGD	MISCELLANEOUS	QA	QA	337	187
546	0000-109-QVE-Q-002			MQP for LV bus duct		A	B	FGD	MISCELLANEOUS	QA	QA	337	187
547	0000-109-QVE-Q-003			MQP for MCC		A	B	FGD	MISCELLANEOUS	QA	QA	266	116
548	0000-109-QVE-Q-004			MQP for PDB, JB, LPBS, MLDB, SLDB, DCDB & ACDB		A	B	FGD	MISCELLANEOUS	QA	QA	337	187
549	0000-109-QVE-Q-006			MQP of Flexible Cable Tray Supporting System		A	D	FGD	MISCELLANEOUS	QA	QA	171	21
550	0000-109-QVE-Q-007			MQP for Power Cables		A	B	FGD	MISCELLANEOUS	QA	QA	337	187
551	0000-109-QVE-Q-008			MQP for Control & Instrumentation Cables		A	B	FGD	MISCELLANEOUS	QA	QA	337	187
552	0000-109-QVE-Q-009			MQP for HT Motor for Booster fan		A	B	FGD	MISCELLANEOUS	QA	QA	286	136
553	0000-109-QVE-Q-010			MQP for HT Motor for other than Booster fan (QAP FOR BALL MILL MOTOR)		A	B	FGD	MISCELLANEOUS	QA	QA	317	167
554	0000-109-QVE-Q-011			MQP for LT Motor		A	B	FGD	MISCELLANEOUS	QA	QA	322	172
555	0000-109-QVE-Q-012			MQP for Lighting Transformer		A	B	FGD	MISCELLANEOUS	QA	QA	336	186
556	0000-109-QVE-Q-013			MQP for elevators		A	B	FGD	MISCELLANEOUS	QA	QA	259	109
557	0000-109-QVE-Q-014			MQP for VFD		A	B	FGD	MISCELLANEOUS	QA	QA	322	172
558	0000-109-QVE-Q-015			MQP for Geared Motor		A	B	FGD	MISCELLANEOUS	QA	QA	322	172
559	0000-109-QVE-Q-020			MQP for HT Cables		A				QA-Elect	QA-Elect		
560	0000-109-QVE-Q-021			MQP for Battery Charger (220/110 V)		A				QA-Elect	QA-Elect		
561	0000-109-QVE-Q-022			MQP for HT Switchgear		A				QA-Elect	QA-Elect		
562	0000-109-QVE-Q-023			MQP for Elect. Actuator		A				QA-Elect	QA-Elect		
563	0000-109-QVE-Q-024			MQP for DG Set		A				QA-Elect	QA-Elect		
564	0000-109-QVE-Q-025			MQP for Oil Filled Transformer		A				QA-Elect	QA-Elect		
565	0000-109-QVE-Q-051			MQP for Suspended Magnets		A	B	FGD	MISCELLANEOUS	QA	QA	350	200
566	0000-109-QVE-Q-052			MQP for Belt Weigher		A	B	FGD	MISCELLANEOUS	QA	QA	350	200
567	0000-109-QVE-Q-053			MQP for Metal Detector		A	B	FGD	MISCELLANEOUS	QA	QA	171	21
568	0000-109-QVE-Q-054			MQP for Magnetic Separator		A	B	FGD	MISCELLANEOUS	QA	QA	350	200
569	0000-109-QVE-Q-055			MQP of HT Motor (Imported)		A	B	FGD	MISCELLANEOUS	QA	QA	171	21
570	0000-109-QVE-Q-056			MQP of LT Motor FOR AIR COMPRESSOR (ABB MAKE)		A	B	FGD	MISCELLANEOUS	QA	QA	171	21
571	0000-109-QVE-Q-057			MQP FOR BOOSTER FAN CABLES		A	B	FGD	MISCELLANEOUS	QA	QA	171	21
572	0000-109-QVI-G-001			FQP for Instrumentation work		A	D	FGD	MISCELLANEOUS	QA	QA	322	172
573	0000-109-QVI-Q-001			MQP for SO2 analyzer		A	B	FGD	MISCELLANEOUS	QA	QA	292	142
574	0000-109-QVI-Q-002			MQP for pressure switch / DP switch		A	B	FGD	MISCELLANEOUS	QA	QA	337	187
575	0000-109-QVI-Q-003			MQP for RTD with thermowell		A	B	FGD	MISCELLANEOUS	QA	QA	337	187
576	0000-109-QVI-Q-004			MQP for Temperature Transmitter / DP Transmitter / Pressure Transmitter		A	B	FGD	MISCELLANEOUS	QA	QA	293	143
577	0000-109-QVI-Q-005			MQP for flow transmitter		A	B	FGD	MISCELLANEOUS	QA	QA	337	187

S. No.	NTPC_DRG_NO	Rev_drg_no_for_inouhse_drg	TO_BE_SHIFTED_TO_PACKAGE	DRG_TITLE	PROJECT_SPECIFC_INFORMATION	DRG_PURPOSE	DRG_TYPE	AREA	MILESTONE	CUSTODIAN	REVIEWERS	SUB_FROM_MP_AWARD	SUB_FROM_FGD_AWARD
578	0000-109-QVI-Q-006			MQP for PLC		A	B	FGD	MISCELLANEOUS	QA	QA	264	114
579	0000-109-QVI-Q-007			MQP for Flow switch		A	B	FGD	MISCELLANEOUS	QA	QA	337	187
580	0000-109-QVI-Q-008			MQP for temperature switch		A	B	FGD	MISCELLANEOUS	QA	QA	337	187
581	0000-109-QVI-Q-009			MQP for Vibration transmitter with sensor		A	B	FGD	MISCELLANEOUS	QA	QA	293	143
582	0000-109-QVI-Q-010			MQP for UPS		A	B	FGD	MISCELLANEOUS	QA	QA	319	169
583	0000-109-QVI-Q-011			MQP for battery charger		A	B	FGD	MISCELLANEOUS	QA	QA	508	358
584	0000-109-QVI-Q-012			MQP for Instrument Cable		A	B	FGD	MISCELLANEOUS	QA	QA	315	165
585	0000-109-QVI-Q-013			MQP for GGH Control (GGH Soot Blower)		A	B	FGD	MISCELLANEOUS	QA	QA	250	100
586	0000-109-QVI-Q-014			MQP for Ni-Cd Battery		A	B	FGD	MISCELLANEOUS	QA	QA	511	361
587	0000-109-QVI-Q-015			MQP for LIE/LIR		A	B	FGD	MISCELLANEOUS	QA	QA	511	361
588	0000-109-QVI-Q-016			MQP for Control Valve						QA-C&I	QA-C&I		
589	0000-109-QVI-Q-017			MQP for Thermocouple with thermowell						QA-C&I	QA-C&I		
590	0000-109-QVI-Q-018			MQP for Impulse Pipe & Tube						QA-C&I	QA-C&I		
591	0000-109-QVI-Q-019			MQP for Instrument valve						QA-C&I	QA-C&I		
592	0000-109-QVI-Q-020			MQP for Fiber Optics Cable						QA-C&I	QA-C&I		
593	0000-109-QVI-Q-021			MQP for Transducer						QA-C&I	QA-C&I		
594	0000-109-QVI-Q-022			MQP for control desk						QA-C&I	QA-C&I		
595	0000-109-QVI-Q-023			MQP for Flue Gas analyser panel						QA-C&I	QA-C&I		
596	0000-109-QVI-Q-024			MQP for RF type Level Switch						QA-C&I	QA-C&I		
597	0000-109-QVI-Q-025			MQP for CEMS						QA-C&I	QA-C&I		
598	0000-109-QVI-Q-026			MQP for Fire Alarm system						QA-C&I	QA-C&I		
599	0000-109-QVI-Q-027			MQP for Local control panel(Blank encloser) for fire alarm panel						QA-C&I	QA-C&I		
600	0000-109-QVI-Q-072			MQP for Actuators(without IS)		A	B	FGD	MISCELLANEOUS	QA	QA	350	200
601	0000-109-QVI-Q-073			MQP for Actuators(with IS)		A	B	FGD	MISCELLANEOUS	QA	QA	350	200
602	0000-109-QVI-Q-075			MQP for PDB of M/s pyrotech Electronics Udaipur		A	B	FGD	MISCELLANEOUS	QA	QA	350	200
603	0000-109-QVM-G-001			FQP for Material Receipt & Stoarge (Storage & preservation Manual at site)		A	D	FGD	MISCELLANEOUS	QA	QA	270	120
604	0000-109-QVM-G-002			Field Quality Plan for Mechanical work Part 1 - FQP for Absorber, Tanks, Silo, Ducts, pipe lines etc including Welding Manual, Heat Treatment Manuals		A	D	FGD	MISCELLANEOUS	QA	QA	233	83
605	0000-109-QVM-G-003			Field Quality Plan for Mechanical work Part 2 - Field Quality Plan of different Mechanical Equipment for Wet FGD plant		A	D	FGD	MISCELLANEOUS	QA	QA	233	83
606	0000-109-QVM-G-004			Field Quality Plan for Mechanical work Part 3 - Field Quality Plan of DUCTS		A	D	FGD	MISCELLANEOUS	QA	QA	233	83
607	0000-109-QVM-G-005			FQP RECEIPT AND STORAGE- Limestone & Gypsum Handling Plant		A	B	FGD	MISCELLANEOUS	QA	QA		
608	0000-109-QVM-G-006			FQP FOR MECHANICAL ERECTION-Limestone & Gypsum Handling Plant		A	B	FGD	MISCELLANEOUS	QA	QA		
609	0000-109-QVM-G-077			Field Quality Plan for Elevator		A	B	FGD	MISCELLANEOUS	QA	QA	350	200
610	0000-109-QVM-Q-002			MQP for FGD SUPPORT STRUCTURE (COLUMNS BEAMS & BRACING)		A	D	FGD	MISCELLANEOUS	QA	QA	322	172
611	0000-109-QVM-Q-004			MQP for Non Metallic Expansion Joint		A	B	FGD	MISCELLANEOUS	QA	QA	261	111
612	0000-109-QVM-Q-005			MQP for Agitator		A	B	FGD	MISCELLANEOUS	QA	QA	258	108
613	0000-109-QVM-Q-006			MQP for Oxidation Blower		A	B	FGD	MISCELLANEOUS	QA	QA	238	88
614	0000-109-QVM-Q-007			MQP for Horizontal Vacuum Belt Filter with Pump and accessories		A	B	FGD	MISCELLANEOUS	QA	QA	223	73
615	0000-109-QVM-Q-008			MQP for pipes & tubes		A	B	FGD	MISCELLANEOUS	QA	QA	337	187
616	0000-109-QVM-Q-009			MQP for recirculation slurry pump		A	B	FGD	MISCELLANEOUS	QA	QA	224	74
617	0000-109-QVM-Q-010			MQP for slury pump		A	B	FGD	MISCELLANEOUS	QA	QA	240	90
618	0000-109-QVM-Q-011			MQP for clear water pump		A	B	FGD	MISCELLANEOUS	QA	QA	244	94
619	0000-109-QVM-Q-012			MQP for Dampers & Seal air fan with heater & Gates		A	B	FGD	MISCELLANEOUS	QA	QA	272	122

S. No.	NTPC_DRG_NO	Rev_drg_no_for_inouhse_drg	TO_BE_SHIFTED_TO_PACKAGE	DRG_TITLE	PROJECT_SPECIFC_INFORMATION	DRG_PURPOSE	DRG_TYPE	AREA	MILESTONE	CUSTODIAN	REVIEWERS	SUB_FROM_MP_AWARD	SUB_FROM_FGD_AWARD
620	0000-109-QVM-Q-013			MQP for GGH with accessories		A	B	FGD	MISCELLANEOUS	QA	QA	210	60
621	0000-109-QVM-Q-014			MQP for Lime Stone & Gypsum Handling System		A	B	FGD	MISCELLANEOUS	QA	QA	257	107
622	0000-109-QVM-Q-015			MQP for Hoist		A	B	FGD	MISCELLANEOUS	QA	QA	320	170
623	0000-109-QVM-Q-016			MQP for Air Receiver		A	D	FGD	MISCELLANEOUS	QA	QA	314	164
624	0000-109-QVM-Q-017			MQP for insulation		A	B	FGD	MISCELLANEOUS	QA	QA	337	187
625	0000-109-QVM-Q-018			MQP for REAGENT PREPARATION SYSTEM (Ball mill with accessories)		A	B	FGD	MISCELLANEOUS	QA	QA	244	94
626	0000-109-QVM-Q-019			MQP for Booster Fan wirg accessories		A	B	FGD	MISCELLANEOUS	QA	QA	286	136
627	0000-109-QVM-Q-020			MQP for foundation bolts		A	D	FGD	MISCELLANEOUS	QA	QA	322	172
628	0000-109-QVM-Q-020A			MQP for foundation bolts M/s Quality Engineering Works, Kolkata		A	D	FGD	MISCELLANEOUS	QA	QA	322	172
629	0000-109-QVM-Q-020B			MQP for foundation bolts M/s Indiana Conveyors, Jejuri		A	D	FGD	MISCELLANEOUS	QA	QA	322	172
630	0000-109-QVM-Q-021			MQP for Instrument Air Compressor		A	B	FGD	MISCELLANEOUS	QA	QA	243	93
631	0000-109-QVM-Q-022			MQP for Air Dryer		A	B	FGD	MISCELLANEOUS	QA	QA	311	161
632	0000-109-QVM-Q-023			MQP for FGD valves		A	B	FGD	MISCELLANEOUS	QA	QA	314	164
633	0000-109-QVM-Q-024			MQP for air conditiong and ventilation system		A	B	FGD	MISCELLANEOUS	QA	QA	337	187
634	0000-109-QVM-Q-031			MQP for Absorber Tank		A				QA	QA		
635	0000-109-QVM-Q-032			MQP for Hydro Cyclone		A				QA	QA		
636	0000-109-QVM-Q-055			MQP for Crusher		A	B	FGD	MISCELLANEOUS	QA	QA	350	200
637	0000-109-QVM-Q-057			MQP for Sampling System		A	B	FGD	MISCELLANEOUS	QA	QA	350	200
638	0000-109-QVM-Q-058			MQP for Dust Extraction System		A	B	FGD	MISCELLANEOUS	QA	QA	350	200
639	0000-109-QVM-Q-059			MQP for Dust Suppression System		A	B	FGD	MISCELLANEOUS	QA	QA	350	200
640	0000-109-QVM-Q-060			MQP for Elevator(rack and Pinion Type)		A	B	FGD	MISCELLANEOUS	QA	QA	350	200
641	0000-109-QVM-Q-061			MQP for Sump Pump		A	B	FGD	MISCELLANEOUS	QA	QA	350	200
642	0000-109-QVM-Q-062			MQP for Ventilation System		A	B	FGD	MISCELLANEOUS	QA	QA	350	200
643	0000-109-QVM-Q-063			MQP for Fabric Belts		A	B	FGD	MISCELLANEOUS	QA	QA	350	200
644	0000-109-QVM-Q-064			MQP for Belt Vulcanizer		A	B	FGD	MISCELLANEOUS	QA	QA	350	200
645	0000-109-QVM-Q-065			MQP for Idler		A	B	FGD	MISCELLANEOUS	QA	QA	350	200
646	0000-109-QVM-Q-066			MQP for Pulley		A	B	FGD	MISCELLANEOUS	QA	QA	350	200
647	0000-109-QVM-Q-067			MQP for Helical or Bevel Gear Boxes		A	B	FGD	MISCELLANEOUS	QA	QA	350	200
648	0000-109-QVM-Q-068			MQP for Vibration monitoring System		A	B	FGD	MISCELLANEOUS	QA	QA	350	200
649	0000-109-QVM-Q-069			MQP for Fluid Coupling(traction type)		A	B	FGD	MISCELLANEOUS	QA	QA	350	200
650	0000-109-QVM-Q-070			MQP for CI Gate/globe/Check Valves(Upto 600 NB PN-1.6)		A	B	FGD	MISCELLANEOUS	QA	QA	350	200
651	0000-109-QVM-Q-071			MQP for Flap Gate Gate		A	B	FGD	MISCELLANEOUS	QA	QA	350	200
652	0000-109-QVM-Q-073			MQP for Support Structure		A	B	FGD	MISCELLANEOUS	QA	QA	350	200
653	0000-109-QVM-Q-074			MQP for Bucket Elevator		A	B	FGD	MISCELLANEOUS	QA	QA	350	200
654	0000-109-QVM-Q-075			MQP for Rotary Feeder		A	B	FGD	MISCELLANEOUS	QA	QA	350	200
655	0000-109-QVM-Q-076			MQP for Travelling Tripper		A	B	FGD	MISCELLANEOUS	QA	QA	350	200
656	0000-109-QVM-Q-078			MQP for slury pump (Imported)		A	B	FGD	MISCELLANEOUS	QA	QA	350	200
657	0000-109-QVM-Q-079			MQP for Slurry Pump (Sump Type) ¿ Supplier is Sam Turbo, Coimabtur, India		A	B	FGD	MISCELLANEOUS	QA	QA	350	200
658	0000-109-QVM-Q-080			MQP for Structural Fabrication		A	-	FGD	MISCELLANEOUS	QA	QA	171	21
659	0000-109-QVM-Q-081			MQP for Hoists up to 15 MT		A	-	FGD	MISCELLANEOUS	QA	QA	171	21
660	0000-109-QVM-Q-086			MQP for Technological Structure		A	B	FGD	MISCELLANEOUS	QA	QA	350	200
661	0000-109-QVM-Q-087			MQP for Silo		A	B	FGD	MISCELLANEOUS	QA	QA	350	200
662	0000-109-QVM-Q-088			MQP for Pipe Expansion Joint		A	B	FGD	MISCELLANEOUS	QA	QA	171	21
663	0000-109-QVM-Q-089			MQP for Geared Motor for Bucket Elevator		A	B	FGD	MISCELLANEOUS	QA	QA	171	21
664	0000-109-QVM-Q-090			MQP for Valve (Ball, Gate, Globe, Check Valve)		A	B	FGD	MISCELLANEOUS	QA	QA	171	21
665	0000-109-QVM-Q-091			MQP for Knife Gate Valve		A	B	FGD	MISCELLANEOUS	QA	QA	171	21
666	0000-109-QVM-Q-092			MQP for Diaphragm Valve (Main Package)		A	B	FGD	MISCELLANEOUS	QA	QA	171	21

S. No.	NTPC_DRG_NO	Rev_drg_no_for_inouhse_drg	TO_BE_SHIFTED_TO_PACKAGE	DRG_TITLE	PROJECT_SPECIFC_INFORMATION	DRG_PURPOSE	DRG_TYPE	AREA	MILESTONE	CUSTODIAN	REVIEWERS	SUB_FROM_MP_AWARD	SUB_FROM_FGD_AWARD
667	0000-109-QVM-Q-093			MQP for Axial Flow Fan with motor for Ventilation System		A	B	FGD	MISCELLANEOUS	QA	QA	350	200
668	0000-109-QVM-Q-094			MQP for Ventilation Fan		A	B	FGD	MISCELLANEOUS	QA	QA	350	200
669	0000-109-QVM-Q-095			MQP for Butterfly Valve 1200 mm dia		A	B	FGD	MISCELLANEOUS	QA	QA	171	21
670	0000-109-QVM-Q-096			MQP for Expansion Joints A/c Booster Fan		A	B	FGD	MISCELLANEOUS	QA	QA	171	21
671	0000-109-QVM-Q-097			MQP for Ball Valve (M/s Leader)		A	B	FGD	MISCELLANEOUS	QA	QA	171	21
672	0000-109-QVM-Q-098			MQP of Centrifugal Fan of Dust Extraction System		A	B	FGD	MISCELLANEOUS	QA	QA	171	21
673	0000-109-QVM-Q-099			MQP for Rubber Lined Pipe		A	B	FGD	MISCELLANEOUS	QA	QA	171	21
674	0000-109-QVM-Q-101			Apron feeder		A	B	FGD	MISCELLANEOUS	QA	QA		
675	0000-109-QVM-Q-102			Paddle feeder		A	B	FGD	MISCELLANEOUS	QA	QA		
676	0000-109-QVM-Q-103			Vibrating Screen feeder		A	B	FGD	MISCELLANEOUS	QA	QA		
677	0000-109-QVM-Q-104			Vibrating feeder		A	B	FGD	MISCELLANEOUS	QA	QA		
678	0000-109-QVM-Q-105			MQP for Fluid Coupling(Scoop Type)		A	B	FGD	MISCELLANEOUS	QA	QA		
679	0000-109-QVM-Q-106			MQP for Rack & Pinion Gate		A	B	FGD	MISCELLANEOUS	QA	QA		
680	0000-109-QVM-Q-107			Centrifugal pump		A	B	FGD	MISCELLANEOUS	QA	QA		
681	0000-109-QVM-Q-108			Strainer		A	B	FGD	MISCELLANEOUS	QA	QA		
682	0000-109-QVM-Q-120			MQP OF CONDENSING UNIT				FGD		QA Mech BOP	QA Mech BOP		
683	0000-109-QVM-Q-121			MQP OF AHU				FGD		QA Mech BOP	QA Mech BOP		
684	0000-109-QVM-Q-122			MQP OF CENDRIFUGAL FAN				FGD		QA Mech BOP	QA Mech BOP		
685	0000-109-QVM-Q-123			MQP OF PAC				FGD		QA Mech BOP	QA Mech BOP		
686	0000-109-QVM-Q-124			MQP OF UAF				FGD		QA Mech BOP	QA Mech BOP		
687	0000-109-QVM-Q-125			MQP OF HORIZONTAL CENTRIFUGAL PUMP				FGD		QA Mech BOP	QA Mech BOP		
688	0000-109-QVM-Q-126			MAP OF PIPE				FGD		QA Mech BOP	QA Mech BOP		
689	0000-109-QVM-Q-127			MQP OF VALVES (GATE, BLOBE & CHECK)				FGD		QA Mech BOP	QA Mech BOP		
690	0000-109-QVM-Q-128			MQP OF BUTTERFLY VALVE				FGD		QA Mech BOP	QA Mech BOP		
691	0000-109-QVM-Q-129			MQP OF FILTERS				FGD		QA Mech BOP	QA Mech BOP		
692	0000-109-QVM-Q-130			MQP OF THERMAL INSULATION GLASS WOOL/ ROCK WOOL				FGD		QA Mech BOP	QA Mech BOP		
693	0000-109-QVM-Q-131			MQP OF THERMAL INSULATION NITRIL RUBBER/ POLEURETHANE FOAM/ POLYISOCYNURATE FOAM				FGD		QA Mech BOP	QA Mech BOP		
694	0000-109-QVM-Q-133			MQP OF PHE				FGD		QA Mech BOP	QA Mech BOP		
695	0000-109-QVM-Q-134			MQP OF PIPE				FGD		QA Mech BOP	QA Mech BOP		
696	0000-109-QVM-Q-135			MQP OF VALVES				FGD		QA Mech BOP	QA Mech BOP		
697	0000-109-QVM-Q-136			MQP OF HORIZONTAL CENTRIFUGAL PUMP				FGD		QA Mech BOP	QA Mech BOP		
698	0000-109-QVM-W-001			QA programme		I	D	FGD	MISCELLANEOUS	QA	QA	210	60
699	0000-109-QVM-W-002			QA Organisation for implementation and QA system manual		I	D	FGD	MISCELLANEOUS	QA	QA	180	30
700	0000-109-QVM-W-005			WPS for Carbon Steel Welding at site		A	D	FGD	MISCELLANEOUS	QA	QA	248	98
701	0000-109-QVM-W-006			WPS for SS welding at site		A	D	FGD	MISCELLANEOUS	QA	QA	248	98
702	0000-109-QVM-W-008			WPS (E-7018 & FCAW) for WFGD Steel Structural Work		A	D	FGD	MISCELLANEOUS	QA	QA	248	98
703	0000-109-QVM-W-009			WPS for CS to SS Welding		A	D	FGD	MISCELLANEOUS	QA	QA	248	98
704	0000-109-QVM-W-010			WPS for Welding at Shop (CS & SS)		A	D	FGD	MISCELLANEOUS	QA	QA	248	98
705	0000-109-QVM-W-011			QA Documentation Package for items / equipmentmanufactured and despatched to site		I	D	FGD	MISCELLANEOUS	QA	QA	341	191
706	0000-109-QVM-W-012			QA Documentation Package for field activities on equip-ment/systems at site		I	D	FGD	MISCELLANEOUS	QA	QA	341	191
707	0000-109-QVM-W-013			WPS for SAW Welding (Indiana, Jejuri)		A	D	FGD	MISCELLANEOUS	QA	QA	248	98
708	0000-109-QVM-W-014			WPS for Shop Welding (Crusher)		A	D	FGD	MISCELLANEOUS	QA	QA	248	98
709	0000-109-QVM-W-020			WPS for Limestone & Gypsum Handling System		A	D	FGD	MISCELLANEOUS	QA	QA	248	98
710	0000-109-QVM-W-30			WPS for AC & Ventilation System of FGD				FGD		QA Mech BOP	QA Mech BOP		

NTPC Limited

(A Government of India Enterprise)

NORTH KARANPURA SUPER THERMAL POWER PRO□ECT (□□□□0MW)

PART – C

GENERAL TECHNICAL REQUIREMENTS

SECTION – VI

FOR

FLUE GAS DESULPHURISATION (FGD) SYSTEM PACKAGE

BIDDING DOCUMENT NO.: CS-4410-10□-2

NTPC Limited

(A Government of India Enterprise)

NORTH KARANPURA SUPER THERMAL POWER PRO□ECT (□□□□0MW)

PART - C

GENERAL TECHNICAL REQUIREMENTS

SECTION – VI

FOR

FLUE GAS DESULPHURISATION (FGD) SYSTEM PACKAGE

BIDDING DOCUMENT NO.: CS-4410-10□-2

(This document is meant for the exclusive purpose of bidding against this Package and shall not be transferred, reproduced or otherwise used for purposes other than that for which it is specifically issued).

PART - C

GENERAL TECHNICAL REQUIREMENTS

GENERAL TECHNICAL REQUIREMENTS

PART - C

CONTENTS

Clause No.	Description	Page No.
1.00.00	Introduction	1
2.00.00	Brand Name	1
3.00.00	Base Offer & Alternate Proposals	1
4.00.00	Completeness of Facilities	1
5.00.00	Codes & Standards	2
6.00.00	Equipment Functional Guarantee	4
7.00.00	Design of Facilities/ Maintenance & Availability Considerations	5
8.00.00	Documents, Data and Drawings to be furnished by Contractor	5
9.00.00	Technical Co-ordination Meeting	21
10.00.00	Design Improvements	22
11.00.00	Equipment Bases	22
12.00.00	Protective Guards	22
13.00.00	Lubricants, Servo fluids and Chemicals	23
14.00.00	Lubrication	23
15.00.00	Material of Construction	23
16.00.00	Rating Plates, Name Plates & Labels	23
17.00.00	Tools and Tackles	25
18.00.00	Welding	25

Clause No.	Description	Page No.
19.00.00	Colour Code for All equipments/Pipings/PIpeServices	25
20.00.00	Protection and Preserveative shop Coating	25
21.00.00	Quality Assurance Programme	26
22.00.00	General Requirements - Quality Assurance	27
23.00.00	Quality Assurance Documents	32
24.00.00	Project Manager's Supervision	34
25.00.00	Inspection, Testing and Inspection Certificates	34
26.00.00	Pre-commissioning and Commissioning Facilities	37
27.00.00	Taking over	40
28.00.00	Training of Employer's Personnel	41
29.00.00	Safety Aspects during Construction and Erection	41
30.00.00	Noise Level	42
31.00.00	Packaging and Transportation	42
32.00.00	Electrical Equipments/Enclosures	42
33.00.00	Instrumentation and Control	42
34.00.00	Electrical Noise Control	43
35.00.00	Surge protection for solid state equipment	44
36.00.00	Instrument Air System	44
37.00.00	Tapping Points for Measurements	44
38.00.00	System Documentation	44
39.00.00	Maintenance Manuals of Electronic Modules	45

Clause No.	Description	Page No.
Annexure - I		75
Annexure - II		76
Annexure - III		77
Annxure - IV		78
Annexure - V		79
Annexure - VI		80
Annexure - VII		82

1.00.00 **INTRODUCTION**

This part covers technical requirements which will form an integral part of the Contract. The following provisions shall supplement all the detailed technical specifications and requirements brought out in Section-VI, the Technical Specification and the Technical Data Sheets.

2.00.00 **BRAND NAME**

Whenever a material or article is specified or described by the name of a particular brand, manufacturer or vendor, the specific item mentioned shall be understood to be indicative of the function and quality desired, and not restrictive; other manufacturer's products may be considered provided sufficient information is furnished to enable the Employer to determine that the products proposed are equivalent to those named.

3.00.00 **BASE OFFER & ALTERNATE PROPOSALS**

The Bidder's proposal shall be based upon the use of equipment and material complying fully with the requirements specified herein. It is recognised that the Contractor may have standardized on the use of certain components, materials, processes or procedures different than those specified herein. Alternate proposals offering similar equipment based on the manufacturer's standard practice will also be considered, provided the base offer is in line with technical specifications and such proposals meet the specified design standards and performance requirement and are acceptable to the Employer. Sufficient amount of information for justifying such proposals shall be furnished to Employer alongwith the bid to enable the Employer to determine the acceptability of these proposals.

4.00.00 **COMPLETENESS OF FACILITIES**

4.01.00 Bidders may note that this is a contract inclusive of the scope as indicated elsewhere in the specification. Each of the plant shall be engineered and designed in accordance with the specification requirement. All engineering and associated services are required to ensure a completely engineered plant shall be provided.

4.02.00 All equipments furnished by the Contractor shall be complete in every respect, with all mountings, fittings, fixtures and standard accessories normally provided with such equipment and/or those needed for erection, completion and safe operation of the equipment and for the safety of the operating personnel, as required by applicable codes, though they may not have been specifically detailed in the respective specifications, unless included in the list of exclusions.

All same standard components/ parts of same equipment provided, shall be interchangeable with one another.

4.03.00 For the C&I systems, the Contractor shall be required to provide regular information about future upgrades and migration paths to the Employer.

5.00.00 **RULES, REGULATIONS, CODES & STANDARDS**

5.01.00 In addition to the codes and standards specifically mentioned in the relevant technical specifications for the equipment / plant / system, all equipment parts, systems and works covered under this specification shall comply with all currently applicable statutory regulations and safety codes of the Republic of India, NTPC rules/codes of practices as well as of the locality where they will be installed, including the following:

a) Indian Electricity Act

b) Indian Electricity Rules

c) Indian Explosives Act

d) Indian Factories Act and State Factories Act

e) Indian Boiler Regulations (IBR)

f) Regulations of the Central Pollution Control Board, India

g) Regulations of the Ministry of Environment & Forest (MoEF), Government of India

h) Pollution Control Regulations of Department of Environment, Government of India

i) State Pollution Control Board.

(j.) Rules for Electrical installation by Tariff Advisory Committee (TAC).

(k.) Building and other construction workers (Regulation of Employment and Conditions of services) Act, 1996

(l.) Building and other construction workers (Regulation of Employment and Conditions of services) Central Rules, 1998

(m.) Explosive Rules, 1983

(n.) Petroleum Act, 1984

(o.) Petroleum Rules, 1976,

(p.) Gas Cylinder Rules, 1981

(q.) Static and Mobile Pressure Vessels (Unified) Rules, 1981

(r.) Workmen's Compensation Act, 1923

(s.) Workmen's Compensation Rules, 1924

(t.) NTPC Safety Rules for Construction and Erection

(u.) NTPC Safety Policy

(v.) Any other statutory codes / standards / regulations, as may be applicable.

5.02.00 Unless covered otherwise in the specifications, the latest editions (as applicable as on date of bid opening), of the codes and standards given below shall also apply:

a) Bureau of Indian standards (BIS)

b) Japanese Industrial Standards (JIS)

c) American National Standards Institute (ANSI)

d) American Society of Testing and Materials (ASTM)

e) American Society of Mechanical Engineers (ASME)

f) American Petroleum Institute (API)

g) Standards of the Hydraulic Institute, U.S.A.

h) International Organisation for Standardisation (ISO)

i) Tubular Exchanger Manufacturer's Association (TEMA)

j) American Welding Society (AWS)

k) National Electrical Manufacturers Association (NEMA)

l) National Fire Protection Association (NFPA)

m) International Electro-Technical Commission (IEC)/European Norm (EN)

n) Expansion Joint Manufacturers Association (EJMA)

o) Heat Exchange Institute (HEI)

	p) IEEE standard q) JEC standard
5.03.00	Other International/ National standards such as DIN, JIS, VDI, EN, BS, GOST etc. shall also be accepted for only material codes and manufacturing standards, subject to the Employer's approval, for which the Bidder shall furnish, adequate information to justify that these standards are equivalent or superior to the standards mentioned above. In all such cases the Bidder shall furnish specifically the variations and deviations from the standards mentioned elsewhere in the specification together with the complete word to word translation of the standard that is normally not published in English.
5.04.00	Not used.
5.05.00	In the event of any conflict between the codes and standards referred to in the above clauses and the requirement of this specification, the requirement of Technical Specification shall govern.
5.06.00	Two (2) English language copies of all national and international codes and/or standards used in the design of the plant, equipment, civil, structural and architectural works shall be provided by the Contractor to the Employer within two calendar months from the date of the Notification of Award.
5.07.00	In case of any change in codes, standards & regulations between the date of bid opening and the date when vendors proceed with fabrication, the Employer shall have the option to incorporate the changed requirements or to retain the original standard. It shall be the responsibility of the Contractor to bring to the notice of the Employer such changes and advise Employer of the resulting effect.
5.08.00	A detailed list of standards apart from those mentioned in the respective detailed specifications in other parts of Section-VI to which all equipment/systems/civil works should conform as indicated in this Part C and elsewhere in the specification.
6.00.00	**EQUIPMENT FUNCTIONAL GUARANTEE**
6.01.00	The functional guarantees of the equipment under the scope of the Contract is given in Section-VI Part - A of Technical Specifications. These guarantees shall supplement the general functional guarantee provisions covered under Defect liabilities Section-IV, General Conditions of Contract.
6.02.00	Liquidated damages for shortfall in meeting functional guarantee(s) during the performance and guarantee tests shall be assessed and recovered from the Contractor as specified elsewhere in this specification.

7.00.00 **DESIGN OF FACILITIES/ MAINTENANCE & AVAILABILITY CONSIDERATIONS**

7.01.00 **DESIGN OF FACILITIES**

All the design procedures, systems and components proposed shall have already been adequately developed and shall have demonstrated good reliability under similar conditions elsewhere.

The Contractor shall be responsible for the selection and design of appropriate equipments to provide the best co-ordinated performance of the entire system. The basic requirements are detailed out in various clauses of the Technical Specifications. The design of various components, assemblies and subassemblies shall be done so that it facilitates easy field assembly and dismantling. All the rotating components shall be so selected that the natural frequency of the complete unit is not critical or close to the operating range of the unit.

7.02.00 **MAINTENANCE AND AVILABILITY CONSIDERATIONS**

Equipment/works offered shall be designed for high availability, low maintenance and ease of maintenance. The Bidder shall specifically state the design features incorporated to achieve high degree of reliability/ availability and ease of maintenance. The Bidder shall also furnish details of availability records in the reference plants stated in his experience list.

Bidder shall state in his offer the various maintenance intervals, spare parts and man-hour requirement during such operation. The intervals for each type of maintenance namely inspection of the furnace, inspection of the entire hot gas path and the minor and major overhauls shall be specified in terms of fired hours , clearly defining the spare parts and man-hour requirement for each stage.

Lifting devices i.e. hoists and chain pulley jacks ,etc. shall be provided by the contractor for handling of any equipment or any of its part having weight in excess of 500 Kgs during erection and maintenance activities.

Lifting devices like lifting tackles, slings, etc. to be connected to hook of the hoist / crane shall be provided by the contractor for lifting the equipment and accessories covered under the specification.

8.00.00 **DOCUMENTS, DATA AND DRAWINGS TO BE FURNISHED BY CONTRACTOR**

8.01.00 Bidders may note that this is a contract inclusive of the scope as indicated elsewhere in the specification. Each of the plant and equipment shall be fully integrated, engineered and designed to perform in accordance with the technical specification. All engineering and technical services required to ensure a completely

engineered plant shall be provided in respect of mechanical, electrical, control & instrumentation, civil & structural works as per the scope.

Each main and auxiliary equipment/item of the plant including instruments shall be assigned a unique tag number. The assignment of tag numbers shall be in accordance with KKS system. In all drawings/documents/data sheet etc. KKS tag number of the equipment/item/instrument etc. shall be indicated.

The Contractor shall furnish engineering data /drawings in accordance with the schedule of information as specified in Technical Data Sheets and Technical Specification.

A comprehensive engg and quality coordination procedure shall be finalized with the successful bidder covering salient features as described in this section of specifications.

8.02.00 The number of copies/prints/CD-ROMs/manuals to be furnished for various types of document is given in **Annexure-VI** to this Part-C, Section-VI of the Technical Specification.

8.03.00 The documentation that shall be provided by the Contractor is indicated in the various sections of specification. This documentation shall include but not be limited to the following:

8.03.01 A) **BASIC ENGINEERING DOCUMENTATION**

Prior to commencement of the detailed engineering work, the Contractor shall furnish a Plant Definition Manual within 12 weeks from the date of the Notification of Award. This manual shall contain the following as a minimum:

i) System description of all the mechanical, electrical, control & instrumentation & civil systems.

ii) Technology scan for each system / sub-system & equipment.

iii) Selection of appropriate technology / schemes for various systems/ subsystems including techno-economic studies between various options.

iv) Optimisation studies including thermal cycle optimisation.

v) Sizing criteria of all the systems, sub-systems/ equipments/ structures/ equipment foundations alongwith all calculations justifying and identifying the sizing and the design margins.

vi) Schemes and Process & Instrumentation diagrams for the various systems/ sub-system with functional write-ups.

vii) Operation Philosophy and the control philosophy of the equipments/system covered under the scope.

ix) General Layout plan of the FGD System incorporating all facilities in Bidder's as well as those in the Employer's scope. This drawing shall also be furnished in the form of CD-ROMs to the Employer for engineering of areas not included in bidder's scope.

x) Basic layouts and cross sections of the main plant building (various floor elevations), boiler, fuel oil area and other areas included in the scope of the bidder.

xi) Documentation in respect of Quality Assurance System as listed out elsewhere in this specification.

The successful bidder shall furnish within three (3) weeks from the date of Notification of Award, a list of contents of the Plant Definition Manual (PDMs) including techno-economic studies, which shall then be mutually discussed & finalised with the Employer.

B) **DETAILED ENGINEERING DOCUMENTS**

i) General layout plan of the FGD System.

ii) Layouts, general arrangements, elevations and cross-sections drawings for all the equipment and facilities of the plant.

iii) Flow diagram, process and instrumentation diagrams along with write up and system description.

iv) Performance curves for Absorber

v) Piping isometric, composite layout and fabrication drawings.

vi) Piping engineering diagrams, pipe and fittings schedules, valve schedules, hanger and support schedules, insulation schedules.

vii) Technical data sheets for all bought out and manufactured items. Contractor shall use the Employer's specifications as a base for placement of orders on their sub vendors.

viii) Detailed design calculations for components, system, piping etc., wherever applicable including sizing calculations for all auxiliaries like mills, fans etc. as per criteria specified elsewhere in specification.

ix) Absorber sizing calculations. Absorber performance data.

x) Mass Balance Diagram

xi) Characteristic Curves/ Performance Correction Curves.

xii) Comprehensive list of all terminal points which interface with Employer's facilities, giving details of location, terminal pressure, temperature, fluid handled & end connection details, forces, moments etc.

xiii) Power supply single line diagram, block logics, control schematics, electrical schematics, etc.

xiv) Protection system diagrams and relay settings.

xv) Cables schedules and interconnection diagrams.

xvii) Cable routing plan.

xviii) Instrument schedule, measuring point list, I/O list, Interconnection & wiring diagram, functional write-ups, and installation drawings for field mounted instruments, logic diagrams, control schematics, wiring and tubing diagrams of panels and enclosures etc. Drawings for open loop and close loop controls (both hardware and software). Motor list and valve schedule including type of actuator etc.

xix) Alarm and annunciation/ Sequence of Event (SOE) list and alarms & trip set points.

xx) Sequence and protection interlock schemes.

xxi) Type test reports, insulation co-ordination study report

xxii) Control system configuration diagramsand card circuit diagrams and maintenance details.

xxiii) Detailed Control system manuals.

xxiv) Detailed flow chart for digital control system.

xv) Mimic diagram layout, Assignment for other application engg.drawings and documents.

xxvi) Civil and Structural works drawings and documents for all structures, facilities, architectural works, foundations underground and overground works and super-structural works as included in the

scope of the bidder civil calculation sheets including structural analysis and design alongwith output results.

xxvii) Underground facilities, levelling, sanitary, land scaping drawings.

xxviii) Geotechnical investigation and site survey reports (if and as applicable).

xxix) Model study reports wherever applicable.

xxx) Functional & guarantee test procedures and test reports.

xxxi) Documentation in respect of Quality Assurance System, and Documentation in respect of Commissioning, as listed out elsewhere in this specification.

xxxii) Maintenance schedule for Absorber & auxiliaries clearly indicating interval, duration if shutdown required, manhours required and tools & tackles required for maintenance.

The Contractor's while submitting the above documents/ drawings for approval/ reference as the case may be, shall mark on each copy of submission the reference letter alongwith the date vide which the submissions are made.

8.03.02 **INSTRUCTION MANUALS**

The Contractor shall make first submission of instruction manual for all the equipments covered under the Contract as per agreed engineering information schedule. The Instruction manuals shall contain full details required for erection, commissioning, operation and maintenance of each equipment. The manual shall be specifically compiled for this project. After finalisation and approval of the Employer the Instruction Manuals shall be submitted as indicated in **Annexure-IV.** The Contract shall not be considered to be completed for purposes of taking over until the final Instructions manuals have been supplied to the Employer. The Instruction Manuals shall comprise of the following.

A) ERECTION MANUALS

The erection manuals shall be submitted atleast three (3) months prior to the commencement of erection activities of particular equipment/system. The erection manual should contain the following as a minimum.

a) Erection strategy.

b) Sequence of erection.

c) Erection instructions.

d) Critical checks and permissible deviation/tolerances.

e) List of tool, tackles, heavy equipments like cranes, dozers, etc.

f) Bill of Materials

g) Procedure for erection and General Safety procedures to followed during erection/installation.

h) Procedure for initial checking after erection.

i) Procedure for testing and acceptance norms.

j) Procedure / Check list for pre-commissioning activities.

k) Procedure / Check list for commissioning of the system.

l) Safety precautions to be followed in electrical supply distribution during erection.

B) OPERATION & MAINTENANCE MANUALS

a) The manual shall be a two rim PVC bound stiff sided binder able to withstand constant usage or where a thicker type is required it shall have locking steel pins, the size of the manual shall not be larger than international size A3. The cover shall be printed with the Project Name, Services covered and Volume / Book number Each section of the manual shall be divided by a stiff divider of the same size as the holder. The dividers shall clearly state the section number and title. All written instructions within the manual not provided by the manufacturers shall be typewritten with a margin on the left hand side.

b) The arrangement and contents of O & M manuals shall be as follows:

1) Chapter 1 - Plant Description: To contain the following sections specific to the equipment/system supplied

(a) Description of operating principle of equipment / system with schematic drawing / layouts.

(b) Functional description of associated accessories / controls. Control interlock protection write up.

(c) Integrated operation of the equipment alongwith the intended system. (This is to be given by the supplier of the Main equipment by taking into account the operating instruction given by the associated suppliers).

(d) Exploded view of the main equipment, associated accessories and auxiliaries with description. Schematic drawing of the equipment alongwith its accessories and auxiliaries.

(e) Design data against which the plant performance will be compared.

(f) Master list of equipments, Technical specification of the equipment/ system and approved data sheets.

(g) Identification system adopted for the various components, (it will be of a simple process linked tagging system).

(h) Master list of drawings (as built drawing - Drawings to be enclosed in a separate volume).

2) Chapter 2.0 - Plant Operation: To contain the following sections specific to the equipment supplied

(a) Protection logics provided for the equipment alongwith brief philosophy behind the logic, Drawings etc.

(b) Limiting values of all protection settings.

(c) Various settings of annunciation/interlocks provided.

(d) Startup and shut down procedure for equipment alongwith the associated systems in step mode.

(e) Do's and Don'ts related to operation of the equipment.

(f) Safety precautions to be take during normal operation. Emergency instruction on total power failure condition/lubrication failure/any other conditions.

(g) Parameters to be monitored with normal value and limiting values.

(h) Equipment isolating procedures.

(i) Trouble shooting with causes and remedial measures.

(j) Routine testing procedure to ascertain healthiness of the safety devices alongwith schedule of testing.

(k) Routine Operational Checks, Recommended Logs and Records

(l) Change over schedule if more than one auxiliary for the same purpose is given.

(m) Preservation procedure on long shut down.

(n) System/plant commissioning procedure.

3) Chapter 3.0 - Plant Maintenance- To contain the following sections specific to the equipment supplied.

(a) Exploded view of each of the equipments. Drawings alongwith bill of materials including name, code no. & population.

(b) Exploded view of the spare parts and critical components with dimensional drawings (In case of Electronic cards, the circuit diagram to be given) and spare parts catalogue for each equipment.

(c) List of Special T/ P required for Overhauling /Trouble shooting including special testing equipment required for calibration etc.

(d) Stepwise dismantling and assembly procedure clearly specifying the tools to be used, checks to be made, records to be maintained etc. Clearance to be maintained etc.

(e) Preventive Maintenance schedules linked with running hours/calendar period alongwith checks to be carried out.

(f) Overhauling schedules linked with running hours/calendar period alongwith checks to be done.

(g) Long term maintenance schedules

(h) Consumables list alongwith the estimated quantity required during normal running and during maintenance like Preventive Maintenance and Overhauling.

(i) List of lubricants with their Indian equivalent, Lubrication Schedule including charts showing lubrication checking, testing and replacement procedure to be carried daily, weekly, monthly & at

longer intervals to ensure trouble free operation and quantity required for complete replacement.

(j) Tolerance for fitment of various components.

(k) Details of sub vendors with their part no. in case of bought out items.

(l) List of spare parts with their Part No, total population, life expediency & their interchangeability with already supplied spares to NTPC.

(m) List of mandatory and recommended spare list along with manufacturing drawings, material specification & quality plan for fast moving consumable spares.

(n) Lead time required for ordering of spares from the equipment supplier, instructions for storage and preservation of spares.

(o) General information on the equipment such as modification carried out in the equipment from its inception, equipment population in the country / foreign country and list of utilities where similar equipments have been supplied.

8.03.03 After finalization and approval of the Employer, the O & M Manuals shall be submitted as indicated in Annexure-VI. The Contract shall not be considered to be completed for purposes of taking over until the final Instructions manuals (both erection and O & M manuals have been supplied to the Employer.

If after the commissioning and initial operation of the plant, the instruction manuals (Erection and /or O &M manuals) require modifications/additions/ changes, the same shall be incorporated and the updated final instruction manuals shall be submitted by the Contractor to the Employer for records and number of copies shall be as mentioned in Annexure-VI.

8.03.03 **PLANT HANDBOOK AND PROJECT COMPLETION REPORT**

8.03.03.01 **PLANT HANDBOOK**

The Contractor shall submit to the Employer a preliminary plant hand book preferably in A-4 size sheets which shall contain the design and performance data of various plants, equipments and systems covering the complete project including

i) Design and performance data.

ii) Process & Instrumentation diagrams.

iii) Single line diagrams.

iv) Sequence & Protection Interlock Schemes.

v) Alarm and trip values.

vi) Performance Curves.

vii) General layout plan and layout of main plant building and auxiliary buildings

viii) Important Do's & Don't's

The plant handbook shall be submitted within twelve (12) months from the date of award of contract. After the incorporation of Employer's comments, the final plant handbook complete in all respects shall be submitted three (3) months before start-up and commissioning activities.

8.03.03.02 **PROJECT COMPLETION REPORT**

The Contractor shall submit a Project Completion Report at the time of handing over the plant.

8.03.04 **DRAWINGS**

a) i) All the FGD plant layouts shall be made in computerised 3D modelling system. The Employer reserves the right to review the 3D model at different stages during the progress of engineering. The layout drawings submitted for Employer's review shall be fully dimensioned and extracted from 3D model after interference check.

ii) All documents submitted by the Contractor for Employer's review shall be in electronic form (soft copies) along with the desired number of hard copies as per **Annexure-VI** of Part-C. The soft copies shall be uploaded by the vendors in C-folders, a Web-based system of NTPC ERP, for which a username and password will be allotted to the new vendor by NTPC.

Similarly, the vendor can download the drawings/documents, approved/ commented by NTPC, through above site.

The soft copies of identified drawings/documents shall be in pdf format, whereas the attachments/reply to the submitted document(s) can be in .doc, .xls, .pdf, .dwg or .std formats.

iii) Final copies of the approved drawings along with requisite number of hard copies shall be submitted as per **Annexure-VI** of Part-C.

iv) Contractor shall prepare the model of all the facilities located in FLUE GAS DESULPHURISATION (FGD) SYSTEM PACKAGE (including all

facilities), and any other facility in an integrated & intelligent 3D software solution using rule-based, data centric 3D Design software with equipment drawings, data sheets, intelligent P&ID correlated with intelligent 3D Model, BOQ, schematics and logic diagrams etc. attached to the respective equipment / systems in the aforesaid 3D model. Contractor shall make a presentation on 3D model every 3 months from LOA to enable NTPC to review the progress of engineering. After the completion of engineering the corresponding complete 3D review model shall be handed over to the employer for its reference.

Contractor shall provide 3D model (which shall include visual interference check, walk-through animation, video simulation for major equipment placement and removal, visual effect, photo realism etc), which is extracted from intelligent 3D model, for employer's review as & when desired by employer. However, all piping layouts, equipment layouts, floor plans, ducting layout (Air/flue gas, A/C, Ventilation etc.), General Arrangement drawings of major buildings, structural arrangement drawings and RCC layout drawings shall necessarily be extracted from the aforesaid 3D model and submitted for employer's review along with the 3D review model to enable NTPC to review and approve these drawings.

b) All documents/text information shall be in latest version of MS Office / MS Excel / PDF FORMAT as applicable.

c) All drawings submitted by the Contractor including those submitted at the time of bid shall be in sufficient detail indicating the type, size, arrangement, weight of each component for packing and shipment, the external connection, fixing arrangement required, the dimensions required for installation and interconnections with other equipments and materials, clearance and spaces required between various portions of equipment and any other information specifically requested in the drawing schedules.

d) Each drawing submitted by the Contractor (including those of subvendors) shall bear a title block at the right hand bottom corner with clear mention of the name of the Employer, the system designation, the specifications title, the specification number, the name of the Project, drawing number and revisions. If standard catalogue pages are submitted the applicable items shall be indicated therein. All titles, notings, markings and writings on the drawing shall be in English. All the dimensions should be in metric units.

e) The drawings submitted by the Contractor (or their subvendors) shall bear Employer's drawing number in addition to contractor's (their sub-vendor's) own drawing number. Employer's drawing numbering system shall be made available to the successful bidder so as to enable him to assign Employer's drawing numbers to the drawings to be submitted by him during the course of execution of the Contract.

The Contractor shall also furnish a "Master Drawing List" which shall be a comprehensive list of all drawings/ documents/ calculations envisaged to be furnished by him during the detailed engineering to the Employer. Such list should clearly indicate the purpose of submission of these drawings i.e. "FOR APPROVAL" or "FOR INFORMATION ONLY".

Similarly, all the drawings/ documents submitted by the Contractor during detailed engineering stage shall be marked "FOR APPROVAL" or "FOR INFORMATION" prior to submission. Further, space shall be identified on each drawing for Approval stamp and electronic signature.

f) The furnishing of detailed engineering data and drawings by the Contractor shall be in accordance with the time schedule for the project. The review of these documents/ data/ drawings by the Employer will cover only general conformance of the data/ drawings/ documents to the specifications and contract, interfaces with the equipments provided by others and external connections & dimensions which might affect plant layout. The review by the Employer should not be construed to be a thorough review of all dimensions, quantities and details of the equipments, materials, any devices or items indicated or the accuracy of the information submitted. The review and/ or approval by the Employer/ Project Manager shall not relieve the Contractor of any of his responsibilities and liabilities under this contract.

g) After the approval of the drawings, further work by the Contractor shall be in strict accordance with these approved drawings and no deviation shall be permitted without the written approval of the Employer.

h) All manufacturing, fabrication and execution of work in connection with the equipment / system, prior to the approval of the drawings, shall be at the Contractor's risk. The Contractor is expected not to make any changes in the design of the equipment /system, once they are approved by the Employer. However, if some changes are necessitated in the design of the equipment/system at a later date, the Contractor may do so, but such changes shall promptly be brought to the notice of the Employer indicating the reasons for the change and get the revised drawing approved again in strict conformance to the provisions of the Technical Specification.

i) Drawings shall include all installations and detailed piping layout drawings. Layout drawings for all piping of 65 mm and larger diameter shall be submitted for review/ approval of Employer piror to erection. Small diameter pipes shall however be routed as per site conditions in consultation with site authority/ representative of Employer based on requirements of such piping indicated in approved/ finalised Flow Scheme/ Process & Instrumentation Diagrams and/or the requirements cropping up for draining & venting of larger diameter piping or otherwise after their erection as per actual physical condition for the entire scope of work of this package.

Assessing & anticipating the requirement and supply of all piping and equipment shall be done by the contractor well in advance so as not to hinder the progress of piping & equipment erection, subsequent system charging and its effective draining & venting arrangement as per site suitability.

j) As Built Drawings

After final acceptance of individual equipment / system by the Employer, the Contractor will update all original drawings and documents for the equipment / system to "as built" conditions and submit no. of copies as per **Annexure VI**.

k) Drawings must be checked by the Contractor in terms of its completeness, data adequacy and relevance with respect to Engineering schedule prior to submission to the Employer. In case drawings are found to be submitted without proper checking by the Contractor, the same shall not be reviewed and returned to the Contractor for re-submission. The contractor shall make a visit to site to see the existing facilities and understand the layout completely and collect all necessary data/ drawings at site which are needed as an input to the engineering. The contractor shall do the complete engineering including interfacing and integration of all his equipment, systems & facilities within his scope of work as well as interface engineering & integration of systems, facilities, equipment & works under Employer's scope and submit all necessary drawings/ documents for the same.

l) The Contractor shall submit adequate prints of drawing / data / document for Employer's review and approval. The Employer shall review the drawings and return soft copy to the Contractor authorizing either to proceed with manufacture or fabrication, or marked to show changes desired. When changes are required, drawings shall be re-submitted promptly, with revisions clearly marked, for final review. Any delays arising out of the failure of the Contractor to submit/rectify and resubmit in time shall not be accepted as a reason for delay in the contract schedule.

m) All engineering data submitted by the Contractor after final process including review and approval by the Project Manager/ Employer shall form part of the contract documents and the entire works covered under these specification shall be performed in strict conformity with technical specifications unless otherwise expressly requested by the Project Manager in writing.

n) The Contractor shall submit drawings in line with the suggestive MDL covered in Part-B, Section-VI of Technical Specification and which shall be duly integrated with approved PERT network.

8.04.00 **ENGINEERING INFORMATION SUBMISSION SCHEDULE**

Prior to the award of Contract, a Detailed Engineering Information Submission Scheduler/Master Drawing List duly integrated with approved PERT network shall be tied up with the Employer. For this, the bidder shall furnish a detailed list of engineering information alongwith the proposed submission schedule. This list would be a comprehensive one including all engineering data / drawings / information for all bought out items and manufactured items. The information shall be categorized into the following parts.

i) Information that shall be submitted for the approval to the Employer before proceeding further, and

ii) Information that would be submitted for Employer's information only.

The Master Drawing List (MDL) shall be updated periodically and submitted to the employer, highlighting the changes made in MDL.

The schedule should allow adequate time for proper review and incorporation of changes/ modifications, if any, to meet the contract without affecting the equipment delivery schedule and overall project schedule. The early submission of drawings and data is as important as the manufacture and delivery of equipment and hardware and this shall be duly considered while determining the overall performance and progress.

8.05.00 **ENGINEERING PROGRESS AND EXCEPTION REPORT**

8.05.01 The Contractor shall submit every month an Engineering progress and Exception Report giving the status of each engineering information including

a) A list of drawings/engineering information which remains unapproved for more than four (4) weeks after the date of first submission

b) Drawings which were not submitted as per agreed schedule.

8.05.02 The draft format for this report shall be furnished to the Employer within four (4) weeks of the award of the contract, which shall then be discussed and finalised with the Employer.

8.06.00 Engineering Co-ordination Procedure

8.06.01 The following principal coordinators will be identified by respective organizations at time of award of contract:

NTPC Engineering Coordinator (NTPC EC):

Name :

Designation :

Address :

a) Postal :

b) Telegraphic / e-Mail :

c) FAX : TELEPHONE :

Contractor's/ Vendor's Engineering Coordinator (VENDOR EC):

Name :

Designation :

Address :

a) Postal :

b) Telegraphic / e-Mail :

c) FAX : TELEPHONE :

8.06.02 All engineering correspondence shall be in the name of above coordinators on behalf of the respective organizations.

8.06.03 Contractor's/Vendor's Drawing Submission and Approval Procedure:

a) All data/information furnished by Vendor in the form of drawings/ documents/catalogues or in any other form for NTPC's information/ interface and or review and approval are referred by the general term "drawings".

b) The 'Master drawings list' indicating titles, Drawing Number, Date of submission and approval etc. shall be finalised mutually between Contractor and Employer before the award of contract. This list shall be updated if required at suitable interval during detailed engineering.

c) All drawings (including those of subvendor's) shall bear at the right hand bottom corner the 'title plate' with all relevant information duly filled in. The Contractor shall furnish this format to his subvendor along with his purchase order for subvendor's compliance.

d) Employer and contractor shall follow their own numbering systems for the drawings. However, Employer shall intimate the contractor, NTPC drawing number on receipt of the first submission of each drawing. Vendor, thereafter, shall indicate NTPC's drawing number in subsequent Submission, in the space provided for this purpose in title plate, in addition to his own drawing number.

e) The contractor shall make a visit to site to see the existing facilities and understand the layout completely and collect all necessary data / drawings at site which are needed as an input to the engineering. The contractor shall do the complete engineering including interfacing and integration of all his equipment, systems & facilities within his scope of work as well as interface engineering & integration of systems, facilities, equipment & works under Employer's scope and submit all necessary drawings/ documents for the same.

f) Drawings must be checked by the Contractor in terms of its completeness, data adequacy and relevance with respect to engineering schedule prior to submission to the Employer. In case drawings are found to be submitted without proper endorsement for checking by the Contractor, the same shall not be reviewed and returned to the Contractor for re-submission.

g) The Contractor shall submit adequate prints of drawing / data / document for Employer's review and approval. The drawings submitted by the Contractor/vendor shall be reviewed by NTPC and their comments shall be forwarded within four (4) weeks of receipt of drawings. Upon review of each drawing, depending on the correctness and completeness of the drawing, the same will be categorized and approval accorded in one of the following categories :

CATEGORY- I:	Approved
CATEGORY- II	Approved, subject to incorporation of comments/ modification as noted. Resubmit revised drawing incorporating the comments.
CATEGORY –III	Not approved. Resubmit revised drawings for approval after incorporating comments/ modification as noted.
CATEGORY -IV	For information and records.

h) Contractor shall resubmit the drawings approved under Category II, III & IVR within three (3) weeks of receipt of comments on the drawings, incorporating all comments. Every revision of the drawing shall bear a revision index wherein such revisions shall be highlighted in the form of description or marked up in the drawing identifying the same with relevant revision Number

enclosed in a triangle (eg. 1, 2, 3 etc). Contractor shall not make any changes in the portions of the drawing other than those commented. If changes are required to be made in the portions already approved, the Contractor shall resubmit the drawing identifying the changes for Employer's review and approval. **Drawings resubmitted shall show clearly the portions where the same are revised marking the relevant revision numbers and Employer shall review only such revised portion of documents.**

i) In case, the Contractor/ Vendor does not agree with any specific comment, he shall furnish the explanation for the same to NTPC for consideration. In all such cases the Contractor shall necessarily enclose explanations along with the revised drawing (taking care of balance comments) to avoid any delay and/or duplication in review work.

j) It is responsibility of the Contractor/ Vendor to get all the drawings approved in the Category I & IV (as the case may be) and complete engineering activities within the agreed schedule. Any delay arising out of submission and modification of drawings shall not alter the contract completion schedule.

k) If Contractor/ Vendor fails to resubmit the drawings as per the schedule, construction work at site will not be held up and work will be carried out on the basis of comments furnished on previous issues of the drawing.

l) These comments will be taken care by the contractor while submitting the revised drawing.

The contractor shall use a single transmittal for drawings. Submission. This shall include transmittal numbers and date, number of copies being sent, names of the agencies to whom copies being sent, drawing number and titles, remarks or special notes if any etc.

9.00.00 **TECHNICAL CO-ORDINATION MEETING**

9.01.00 The Contractor shall be called upon to organise and attend monthly Design/ Technical Co-ordination Meetings (TCMs) with the Employer/Employer's representatives and other Contractors of the Employer during the period of contract. The Contractor shall attend such meetings at his own cost at NEW DELHI / NOIDA or at mutually agreed venue as and when required and fully co-operate with such persons and agencies involved during the discussions.

9.02.00 The Contractor should note that Time is the essence of the contract. In order to expedite the early completion of engineering activities, the Contractor shall submit all drawings as per the agreed Engineering Information Submission Schedule. The drawings submitted by the Contractor will be reviewed by the Employer as far as practicable within three (3) weeks from the date of receipt of the drawing .The

	comments of the Employer shall then be discussed across the table during the above Technical Co-ordination Meeting (s) wherein best efforts shall be made by both sides to ensure the approval of the drawing.
9.02.01	The Contractor shall ensure availability of the concerned experts / consultants/ personnel who are empowered to take necessary decisions during these meetings. The Contractor shall be equipped with necessary tools and facilities so that the drawings/documents can be resubmitted after incorporating necessary changes and approved during the meeting itself.
9.02.02	Should any drawing remain unapproved for more than six (6) weeks after it's first submission ,this shall be brought out in the monthly Engineering Progress and Exception Report with reasons thereof.
9.03.0	Any delays arising out of failure by the Contractor to incorporate Employer's comments and resubmit the same during the TCM shall be considered as a default and in no case shall entitle the Contractor to alter the Contract completion date.
10.00.00	**DESIGN IMPROVEMENTS** The Employer or the Contractor may propose changes in the specification of the equipment or quality thereof and if the parties agree upon any such changes the specification shall be modified accordingly. If any such agreed upon change is such that it affects the price and schedule of completion, the parties shall agree in writing as to the extent of any changing the price and/or schedule of completion before the Contractor proceeds with the change. Following such agreement, the provision thereof, shall be deemed to have been amended accordingly.
11.00.00	**EQUIPMENT BASES** A cast iron or welded steel base plate shall be provided for all rotating equipment which is to be installed on a concrete base, unless otherwise specifically agreed to by the Employer. Each base plate shall support the unit and its drive assembly, shall be of a neat design with pads for anchoring the units, shall have a raised lip all around, and shall have threaded drain connections.
12.00.00	**PROTECTIVE GUARDS** Suitable guards shall be provided for protection of personnel on all exposed rotating and/or moving machine parts. All such guards shall be designed for easy installation and removal for maintenance purpose.

13.00.00	**LUBRICANTS, SERVO FLUIDS AND CHEMICALS**
13.01.00	I. All the first fills of consumables and one years topping requirement of consumables such as greases, oil, lubricants, servo fluids / control fluids, gases and essential chemicals etc. which will be required to put the equipment covered under the scope of specifications, into successful commissioning / initial operation and to establish completion of facilities shall be supplied by the Contractor. Suitable standard lubricants as available in India are desired. Efforts should be made to limit the variety of lubricants to minimum. Bidder shall supply a quantity not less than 10 % of the full charge or one (1) year topping requirement mentioned above (whichever is higher) of each variety of lubricants, servo fluids, gases, chemicals etc (as detailed above) which is expected to be utilized during the first year of operation. The additional quantity shall be supplied in separate container.
13.02.00	As far as possible lubricants marketed by the Indian Oil Corporation shall be used. The variety of lubricants shall be kept to a minimum possible. Detailed specifications for the lubricating oil, grease, gases, servo fluids, control fluids, chemicals etc. required for the complete plant covered herein shall be furnished. On completion of erection, a complete list of bearings/ equipment giving their location and identification marks shall be furnished to the Employer alongwith lubrication requirements.
14.00.00	**LUBRICATION**
14.01.00	Equipment shall be lubricated by systems designed for continuous operation. Lubricant level indicators shall be furnished and marked to indicate proper levels under both standstill and operating conditions.
15.00.00	**MATERIAL OF CONSTRUCTION**
15.01.00	All materials used for the construction of the equipment shall be new and shall be in accordance with the requirements of this specification. Materials utilised for various components shall be those which have established themselves for use in such applications.
16.00.00	**RATING PLATES, NAME PLATES & LABELS**
16.01.00	Each main and auxiliary item of plant including instruments shall have permanently attached to it in a conspicuous position, a rating plate of non-corrosive material upon which shall be engraved manufacturer's name, equipment, type or serial number together with details of the ratings, service conditions under which the item of plant in question has been designed to operate, and such diagram plates as may be required by the Employer.

16.02.00 Each item of plant shall be provided with nameplate or label designating the service of the particular equipment. The inscriptions shall be approved by the Employer or as detailed in appropriate section of the technical specifications.

16.03.00 Such nameplates or labels shall be of white nonhygroscopic material with engraved black lettering or alternately, in the case of indoor circuit breakers, starters, etc. of transparent plastic material with suitably coloured lettering engraved on the back. The name plates shall be suitably fixed on both front and rear side.

16.04.00 Items of plant such as valves, which are subject to handling, shall be provided with an engraved chromium plated nameplate or label with engraving filled with enamel. The name plates for valves shall be marked in accordance with MSS standard SP-25 and ANSI B 16.34 as a minimum.

16.05.00 Hanger/ support numbers shall be marked on all pipe supports, anchors, hangers, snubbers and restraint assemblies. Each constant and variable spring support shall also have stamped upon it the designed hot and cold load which it is intended to support. Suitable scale shall also be provided to indicate load on support or hanger.

16.06.00 Valves, steam traps and strainers shall be identified by Employer's tag number of a metal tap permanently attached to non pressure parts such as the yoke by a stainless steel wire. The direction of flow shall also be marked on the body.

16.07.00 Safety and relief valves shall be provided with the following:

a) Manufacturer's identification.

b) Nominal inlet and outlet sizes in mm.

c) Set pressure in Kg/cm^2 (abs).

d) Blowdown and accumulation as percentage of set pressure.

e) Certified capacity in Kg of saturated steam per hour or in case of liquid certified capacity in litres of water per minute.

16.08.00 All such plates, instruction plates, etc. shall be bilingual with Hindi inscription first, followed by English. Alternatively, two separate plates one with Hindi and the other with English inscriptions may be provided.

16.09.00 All segregated phases of conductors or bus ducts, indoor or outdoor, shall be provided with coloured phase plates to clearly identify the phase of the system.

17.00.00 **TOOLS AND TACKLES**

The Contractor shall supply with the equipment one complete set of all special tools and tackles and other instruments required and other instruments for the erection, assembly, disassembly and proper maintenance of the plant and equipment and systems (including software). These special tools will also include special material handling equipment, jigs and fixtures for maintenance and calibration / readjustment, checking and measurement aids etc. A list of such tools and tackles shall be submitted by the Bidder alongwith the offer.

The price of each tool / tackle shall be deemed to have been included in the total bid price. These tools and tackles shall be separately packed and sent to site. The Contractor shall also ensure that these tools and tackles are not used by him during erection, commissioning and initial operation. For this period the Contractor should bring his own tools and tackles. In case these tools and tackles are used by the Contractor during erection, commissioning or initial operation the same shall be refurbished repaired/replaced as required to the satisfaction of the Employer before handing over to the Employer. All the tools and tackles shall be of reputed make acceptable to the Employer.

18.00.00 **WELDING**

18.01.00 If the manufacturer has special requirements relating to the welding procedures for welds at the terminals of the equipments to be per formed by others the requirements shall be submitted to the Employer in advance of commencement of erection work.

19.00.00 **COLOUR CODE FOR ALL EQUIPMENTS/ PIPINGS/ PIPE SERVICES**

19.01.00 All equipment/ piping/ pipe services are to be painted by the Contractor in accordance with Employer's standard colour coding scheme, which will be furnished to the Contractor during detailed engineering stage.

20.00.00 **PROTECTION AND PRESERVATIVE SHOP COATING**

20.01.00 **PROTECTION**

All coated surfaces shall be protected against abrasion, impact, discoloration and any other damages. All exposed threaded portions shall be suitably protected with either metallic or a nonmetallic protection device. All ends of all valves and piping and conduit equipment connections shall be properly sealed with suitable devices to protect them from damage. The parts which are likely to get rusted, due to exposure to weather, should also be properly treated and protected in a suitable manner. All primers/paints/coatings shall take into account the hot humid, corrosive & alkaline, subsoil or over ground environment as the case may be. The requirements for

painting specification shall be complied with as detailed out in Part-A & B of the Technical Specification.

20.02.00 **PRESERVATIVE SHOP COATING**

All exposed metallic surfaces subject to corrosion shall be protected by shop application of suitable coatings. All surfaces which will not be easily accessible after the shop assembly, shall be treated beforehand and protected for the life of the equipment. All surfaces shall be thoroughly cleaned of all mill scales, oxides and other coatings and prepared in the shop. The surfaces that are to be finish-painted after installation or require corrosion protection until installation, shall be shop painted as per the requirements covered in the relevant part of the Technical Specification.

Transformers and other electrical equipments, if included shall be shop finished with one or more coats of primer and two coats of high grade resistance enamel. The finished colors shall be as per manufacturer's standards, to be selected and specified by the Employer at a later date.

20.03.00 Shop primer for all steel surfaces which will be exposed to operating temperature below 95 degrees Celsius shall be selected by the Contractor after obtaining specific approval of the Employer regarding the quality of primer proposed to be applied. Special high temperature primer shall be used on surfaces exposed to temperature higher than 95 degrees Celsius and such primer shall also be subject to the approval of the Employer.

20.04.00 All other steel surfaces which are not to be painted shall be coated with suitable dust preventive compound subject to the approval of the Employer.

20.05.00 All piping shall be cleaned after shop assembly by shot blasting or other means approved by the Employer. Lube oil piping or carbon steel shall be pickled.

20.06.00 Painting for Civil structures and equipment/system covered under this package shall be done as specified under technical requirements on civil works in relevant part of this specifications.

21.00.00 **QUALITY ASSURANCE PROGRAMME**

21.01.00 To ensure that the equipment and services under the scope of contract whether manufactured or performed within the Contractor’s works or at his sub-contractor’s premises or at the Employer’s site or at any other place of work are in accordance with the specifications, the Contractor shall adopt suitable quality assurance programme to control such activities at all points, as necessary. Such programmes shall be outlined by the Contractor and shall be finally accepted by the Employer/authorised representative after discussions before the award of the contract. The QA programme shall be generally in line with ISO-9001/IS-14001. A

quality assurance programme of the contractor shall generally cover the following:

a) His organisation structure for the management and implementation of the proposed quality assurance programme

b) Quality System Manual

c) Design Control System

d) Documentation Control System

e) Qualification data for Bidder's key Personnel.

f) The procedure for purchase of materials, parts, components and selection of sub-contractor's services including vendor analysis, source inspection, incoming raw-material inspection, verification of materials purchased etc.

g) System for shop manufacturing and site erection control including process controls and fabrication and assembly controls.

h) Control of non-conforming items and system for corrective actions.

i) Inspection and test procedure both for manufacture and field activities.

j) Control of calibration and testing of measuring testing equipments.

k) System for Quality Audits.

l) System for indication and appraisal of inspection status.

m) System for authorising release of manufactured product to the Employer.

n) System for handling storage and delivery.

o) System for maintenance of records, and

p) Furnishing of quality plans for manufacturing and field activities detailing out the specific quality control procedure adopted for controlling the quality characteristics relevant to each item of equipment/component as per formats enclosed as **Annexure-I** and **Annexure-II** respectively.

22.00.00 **GENERAL REQUIREMENTS - QUALITY ASSURANCE**

22.01.00 All materials, components and equipment covered under this specification shall be procured, manufactured, erected, commissioned and tested at all the stages, as per a comprehensive Quality Assurance Programme. An indicative programme of

	inspection/tests to be carried out by the contractor for some of the major items is given in the respective technical specification. This is, however, not intended to form a comprehensive programme as it is the contractor's responsibility to draw up and implement such programme duly approved by the Employer. The detailed Quality Plans for manufacturing and field activities shall be drawn up by the Bidder and will be submitted to Employer for approval. Schedule of finalisation of such quality plans will be finalised before award on enclosed format No. QS-01-QAI-P-1/F3-R0. Monthly progress reports shall be furnished.
22.02.00	Manufacturing Quality Plan will detail out for all the components and equipment, various tests/inspection, to be carried out as per the requirements of this specification and standards mentioned therein and quality practices and procedures followed by Contractor's/ Sub-contractor's/ sub-supplier's Quality Control Organisation, the relevant reference documents and standards, acceptance norms, inspection documents raised etc., during all stages of materials procurement, manufacture, assembly and final testing/performance testing. The Quality Plan shall be submitted on electronic media through C-folders, a web based system of NTPC ERP in addition to hard copy, for review and approval. After approval the same shall be submitted in compiled form on CD-ROM (As per format at Annexure-I)
22.03.00	Field Quality Plans will detail out for all the equipment, the quality practices and procedures etc. to be followed by the Contractor's "Site Quality Control Organisation", during various stages of site activities starting from receipt of materials/equipment at site (As per format at Annexure – II).
22.04.00	The Bidder shall also furnish copies of the reference documents/plant standards/acceptance norms/tests and inspection procedure etc., as referred in Quality Plans along with Quality Plans. These Quality Plans and reference documents/standards etc. will be subject to Employer's approval without which manufacturer shall not proceed. These approved documents shall form a part of the contract. In these approved Quality Plans, Employer shall identify customer hold points (CHP), i.e. test/checks which shall be carried out in presence of the Employer's Project Manager or his authorised representative and beyond which the work will not proceed without consent of Employer in writing. All deviations to this specification, approved quality plans and applicable standards must be documented and referred to Employer along with technical justification for approval and dispositioning.
22.05.00	The contractor shall submit to the Employer Field Welding Schedule for field welding activities in the format enclosed at **Annexure-V.** The field welding schedule shall be submitted to the Employer along with all supporting documents, like welding procedures, heat treatment procedures, NDT procedures etc. at least ninety days before schedule start of erection work at site.
22.06.00	The contractor shall have suitable Field Quality Organization with adequate manpower at Employer's site, to effectively implement the Field Quality Plan (FQP)

	and Field Quality Management System for site activities. The contractor shall submit the details of proposed FQA setup (organizational structure and manpower) for employer's approval. The FQA setup shall be in place at least one month before the start of site activities.
22.07.00	No material shall be despatched from the manufacturer's works before the same is accepted, subsequent to predespatch final inspection including verification of records of all previous tests/inspections by Employer's Project Manager/Authorised representative and duly authorised for despatch by issuance of Material Despatch Clearance Certificate (MDCC).
22.08.00	All material used for equipment manufacture including casting and forging etc. shall be of tested quality as per relevant codes/standards. Details of results of the tests conducted to determine the mechanical properties; chemical analysis and details of heat treatment procedure recommended and actually followed shall be recorded on certificates and time temperature chart. Tests shall be carried out as per applicable material standards and/or agreed details
22.09.00	All welding and brazing shall be carried out as per procedure drawn and qualified in accordance with requirements of ASME Section IX/BS-4870 or other International equivalent standard acceptable to the Employer. All welding/brazing procedures shall be submitted to the Employer or its authorised representative for approval prior to carrying out the welding/brazing.
22.10.00	All brazers, welders and welding operators employed on any part of the contract either in Contractor's/his sub-contractor's works or at site or elsewhere shall be qualified as per ASME Section-IX or BS-4871 or other equivalent International Standards acceptable to the Employer.
22.11.00	Welding procedure qualification & Welder qualification test results shall be furnished to the Employer for approval. However, where required by the Employer, tests shall be conducted in presence of Employer/authorized representative.
22.12.00	For all IBR pressure parts and high pressure piping welding, the latest applicable requirements of the IBR (Indian Boiler Regulations) shall also be essentially complied with. However, other piping system ASME B31.1 or other relevant code as applicable shall be followed. Similarly, any other statutory requirements for the equipment/systems shall also be complied with. On all back-gauged welds MPI/LPI shall be carried before seal welding
22.13.00	All the heat treatment results shall be recorded on time temperature charts and verified with recommended regimes.
22.14.00	No welding shall be carried out on cast iron components for repair.

22.15.00	Unless otherwise proven and specifically agreed with the Employer, welding of dissimilar materials and high alloy materials shall be carried out at shop only.
22.16.00	All non-destructive examination shall be performed in accordance with written procedures as per International Standards. The NDT operator shall be qualified as per SNT-TC-IA (of the American Society of non-destructive examination) or equivalent. NDT shall be recorded in a report, which includes details of methods and equipment used, result/evaluation, job data and identification of personnel employed and details of co-relation of the test report with the job. In general all plates of thickness greater than 40mm & for pressure parts plates of thickness equal to or greater than 25mm shall be ultrasonically tested otherwise as specified in respective equipment specification. All bar stock/Forging of diameter equal to or greater than 40 mm shall be ultrasonically tested.
22.17.00	The Contractor shall list out all major items/ equipment/ components to be manufactured in house as well as procured from sub-contractors (BOI). All the sub-contractor proposed by the Contractor for procurement of major bought out items including castings, forging, semi-finished and finished components/equipment etc., list of which shall be drawn up by the Contractor and finalised with the Employer, shall be subject to Employer's approval on enclosed format No. QS-01-QAI-P-01/F3. The contractor's proposal shall include vendor's facilities established at the respective works, the process capability, process stabilization, QC systems followed, experience list, etc. along with his own technical evaluation for identified sub-contractors enclosed and shall be submitted to the Employer for approval within the period agreed at the time of pre-awards discussion and identified in "DR" category prior to any procurement. Monthly progress reports on sub-contractor detail submission / approval shall be furnished preferably on enclosed format at **Annexure-IV.** Such vendor approval shall not relieve the contractor from any obligation, duty or responsibility under the contract.
22.18.00	For components/equipment procured by the contractors for the purpose of the contract, after obtaining the written approval of the Employer, the contractor's purchase specifications and inquiries shall call for quality plans to be submitted by the suppliers. The quality plans called for from the sub-contractor shall set out, during the various stages of manufacture and installation, the quality practices and procedures followed by the vendor's quality control organisation, the relevant reference documents/standards used, acceptance level, inspection of documentation raised, etc. Such quality plans of the successful vendors shall be finalised with the Employer and such approved Quality Plans shall form a part of the purchase order/contract between the Contractor and sub-contractor. With in three weeks of the release of the purchase orders /contracts for such bought out items /components, a copy of the same without price details but together with the detailed purchase specifications, quality plans and delivery conditions shall be furnished to the Employer on the

	monthly basis by the Contractor along with a report of the Purchase Order placed so far for the contract.
22.19.00	Employer reserves the right to carry out quality audit and quality surveillance of the systems and procedures of the Contractor's or their sub-contractor's quality management and control activities. The contractor shall provide all necessary assistance to enable the Employer carry out such audit and surveillance.
22.20.00	The contractor shall carry out an inspection and testing programme during manufacture in his work and that of his sub-contractor's and at site to ensure the mechanical accuracy of components, compliance with drawings, conformance to functional and performance requirements, identity and acceptability of all materials parts and equipment. Contractor shall carry out all tests/inspection required to establish that the items/equipment conform to requirements of the specification and the relevant codes/standards specified in the specification, in addition to carrying out tests as per the approved quality plan.
22.21.00	Quality audit/surveillance/approval of the results of the tests and inspection will not, however, prejudice the right of the Employer to reject the equipment if it does not comply with the specification when erected or does not give complete satisfaction in service and the above shall in no way limit the liabilities and responsibilities of the Contractor in ensuring complete conformance of the materials/equipment supplied to relevant specification, standard, data sheets, drawings, etc.
22.22.00	For all spares and replacement items, the quality requirements as agreed for the main equipment supply shall be applicable.
22.23.00	Repair/rectification procedures to be adopted to make the job acceptable shall be subject to the approval of the Employer/ authorised representative.
22.24.00	**Environmental Stress Screening** Environmental stress screening test process / procedure for eliminating infant mortile components for DDCMIS / PLC based system & for other systems having substantial electronics components (as determined by employer) like Electronic transmitter, CCTV components, PA systems etc. shall be necessarily furnished for any sub vendors proposed for vendor assessment and approval for this contract. For other approved sub vendors of above mentioned systems, contractor shall furnish the test procedure for eliminating infant mortile components in case, if it is asked for by the employer before these items are offered for inspection / dispatched to site.
22.25.00	The Contractor / Sub-contractor shall carry out routine test on 100% item at contractor / sub-contractor's works. The quantum of check / test for routine & acceptance test by employer shall be generally as per criteria / sampling plan defined in referred standards. Wherever standards have not been mentioned quantum of check / test for routine / acceptance test shall be as agreed during detailed engineering stage.

22.26.00 **Software Reliability / Quality Certification**

Certification from OEM's authorized signatory that software offered with DDCMIS, PLC, CCTV, PA, Pyrometer, CEMS, AAQMS, EQMS, BHMS etc. declaring that the all the offered software(s) had gone through the established software quality test and offered software is not of β-version and offered software is also free from all known bugs as on date of approval of systems documents by NTPC as a part of quality documentation review and approval process during detail engineering.

23.00.00 **QUALITY ASSURANCE DOCUMENTS**

23.01.00 The Contractor shall be required to submit the QA Documentation in two hard copies and two CD ROMs, as identified in respective quality plan with tick (✓)mark.

23.01.01 Each QA Documentation shall have a project specific Cover Sheet bearing name & identification number of equipment and including an index of its contents with page control on each document.

The QA Documentation file shall be progressively completed by the Supplier's sub-supplier to allow regular reviews by all parties during the manufacturing.

The final quality document will be compiled and issued at the final assembly place of equipment before despatch. However CD-Rom may be issued not later than three weeks.

23.02.00 Typical contents of QA Documentation is as below:-

(a.) Quality Plan

(b.) Material mill test reports on components as specified by the specification and approved Quality Plans.

(c.) Manufacturer / works test reports/results for testing required as per applicable codes and standard referred in the specification and approved Quality Plans.

(d.) Non-destructive examination results /reports including radiography interpretation reports. Sketches/drawings used for indicating the method of traceability of the radiographs to the location on the equipment.

(e.) Heat Treatment Certificate/Record (Time- temperature Chart)

(f.) All the accepted Non-conformance Reports (Major/Minor)/deviation, including complete technical details / repair procedure).

(g.) CHP / Inspection reports duly signed by the Inspector of the Employer and Contractor for the agreed Customer Hold Points.

(h.) Certificate of Conformance (COC) wherever applicable.

(i.) MDCC

23.03.00 Similarly, the contractor shall be required to submit two sets (two hard copies and two CD ROMs), containing QA Documentation pertaining to field activities as per Approved Field Quality Plans and other agreed manuals/ procedures, prior to commissioning of individual system.

23.04.00 Before despatch / commissioning of any equipment, the Supplier shall make sure that the corresponding quality document or in the case of protracted phased deliveries, the applicable section of the quality document file is completed. The supplier will then notify the Inspector regarding the readiness of the quality document (or applicable section) for review.

(a.) If the result of the review carried out by the Inspector is satisfactory, the Inspector shall stamp the quality document (or applicable section) for release.

(b.) If the quality document is unsatisfactory, the Supplier shall endeavor to correct the incompleteness, thus allowing to finalize the quality document (or applicable section) by time compatible with the requirements as per contract documents. When it is done, the quality document (or applicable section) is stamped by the Inspector.

(c.) If a decision is made for despatch, whereas all outstanding actions cannot be readily cleared for the release of the quality document by that time, the supplier shall immediately, upon shipment of the equipment, send a copy of the quality document Review Status signed by the Supplier Representative to the Inspector and notify of the committed date for the completion of all outstanding actions & submission. The Inspector shall stamp the quality document for applicable section when it is effectively completed. The submission of QA documentation package shall not be later than 3 weeks after the despatch of equipment.

23.05.00 **TRANSMISSION OF QA DOCUMENTATION**

On release of QA Documentation by Inspector, one set of quality document shall be forwarded to Corporate Quality Assurance Department and other set to respective Project Site of Employer.

For the particular case of phased deliveries, the complete quality document to the Employer shall be issued not later than 3 weeks after the date of the last delivery of equipment.

24.00.00 **PROJECT MANAGER'S SUPERVISION**

24.01.00 To eliminate delays and avoid disputes and litigation, it is agreed between the parties to the Contract that all matters and questions shall be referred to the Project Manager and without prejudice to the provisions of 'Arbitration' clause in Section GCC, the Contractor shall proceed to comply with the Project Manager's decision.

24.02.00 The work shall be performed under the supervision of the Project Manager.

The scope of the duties of the Project Manager pursuant to the Contract, will include but not be limited to the following:

(a.) Interpretation of all the terms and conditions of these documents and specifications

(b.) Review and interpretation of all the Contractor's drawing, engineering data, etc

(c.) Witness or his authorised representative to witness tests and trials either at the manufacturer's works or at site, or at any place where work is performed under the contract

(d.) Inspect, accept or reject any equipment, material and work under the contract

(e.) Issue certificate of acceptance and/or progressive payment and final payment certificates

(f.) Review and suggest modifications and improvement in completion schedules from time to time, and

(g.) Supervise Quality Assurance Programme implementation at all stages of the works.

25.00.00 **INSPECTION, TESTING AND INSPECTION CERTIFICATES**

25.01.00 The word 'Inspector' shall mean the Project Manager and/or his authorised representative and/or an outside inspection agency acting on behalf of the Employer to inspect and examine the materials and workmanship of the works during its manufacture or erection.

25.02.00 The Project Manager or his duly authorised representative and/or an outside inspection agency acting on behalf of the Employer shall have access at all reasonable times to inspect and examine the materials and workmanship of the works during its manufacture or erection and if part of the works is being manufactured or assembled on other premises or works, the Contractor shall obtain

	for the Project Manager and for his duly authorised representative permission to inspect as if the works were manufactured or assembled on the Contractor's own premises or works.
25.03.00	The Contractor shall give the Project Manager/Inspector fifteen (15) days written notice of any material being ready for testing. Such tests shall be to the Contractor's account except for the expenses of the Inspector's. The Project Manager/Inspector, unless the witnessing of the tests is virtually waived and confirmed in writing, will attend such tests within fifteen (15) days of the date on which the equipment is noticed as being ready for test/inspection failing which the contractor may proceed with test which shall be deemed to have been made in the inspector's presence and he shall forthwith forward to the inspector duly certified copies of test reports in two (2) copies.
25.04.00	The Project Manager or Inspector shall within fifteen (15) days from the date of inspection as defined herein give notice in writing to the Contractor, or any objection to any drawings and all or any equipment and workmanship which is in his opinion not in accordance with the contract. The Contractor shall give due consideration to such objections and shall either make modifications that may be necessary to meet the said objections or shall inform in writing to the Project Manager/Inspector giving reasons therein, that no modifications are necessary to comply with the contract.
25.05.00	When the factory tests have been completed at the Contractor's or sub-contractor's works, the Project Manager /Inspector shall issue a certificate to this effect fifteen (15) days after completion of tests but if the tests are not witnessed by the Project Manager /Inspectors, the certificate shall be issued within fifteen (15) days of the receipt of the Contractor's test certificate by the Project Manager /Inspector. Project Manager /Inspector to issue such a certificate shall not prevent the Contractor from proceeding with the works. The completion of these tests or the issue of the certificates shall not bind the Employer to accept the equipment should it, on further tests after erection be found not to comply with the contract.
25.06.00	In all cases where the contract provides for tests whether at the premises or works of the Contractor or any sub-contractor, the Contractor, except where otherwise specified shall provide free of charge such items as labour, material, electricity, fuel, water, stores, apparatus and instruments as may be reasonably demanded by the Project Manager /Inspector or his authorised representatives to carry out effectively such tests on the equipment in accordance with the Contractor and shall give facilities to the Project Manager/Inspector or to his authorised representative to accomplish testing.
25.07.00	The inspection by Project Manager / Inspector and issue of Inspection Certificate thereon shall in no way limit the liabilities and responsibilities of the Contractor in respect of the agreed Quality Assurance Programme forming a part of the contract.

25.08.00	To facilitate advance planning of inspection in addition to giving inspection notice as specified at clause no 25.03.00 of this chapter, the Contractor shall furnish quarterly inspection programme indicating schedule dates of inspection at Customer Hold Point and final inspection stages. Updated quarterly inspection plans will be made for each three consecutive months and shall be furnished before beginning of each calendar month.
25.09.00	All inspection, measuring and test equipment used by contractor shall be calibrated periodically depending on its use and criticality of the test/measurement to be done. The Contractor shall maintain all the relevant records of periodic calibration and instrument identification, and shall produce the same for inspection by NTPC. Wherever asked specifically, the contractor shall re-calibrate the measuring/test equipment in the presence of Project Manager / Inspector.
25.10.00	**Associated document for Quality Assurance programme**
25.10.01	Manufacturing Quality Plan Format No. : QS-01-QAI-P-09/F1-R1 enclosed at **Annexure-I.**
25.10.02	Field Quality Plan Format No.: QS-01-QAI-P-09/F2-R1 enclosed at **Annexure-II.**
25.10.03	List of items requiring quality plan and sub supplier approval. Format No.: QS-01-QAI-P-01/F3-R0 **(Annexure-III).**
25.10.04	Status of items requiring Quality Plan and sub supplier approval. Format enclosed at **Annexure-IV.**
25.10.05	Field Welding Schedule Format enclosed at **Annexure-V.**
25.11.00	**Not Used**
25.12.00	**DEMONSTRATION OF APPLICATION ENGINEERING**
25.12.01	Based on NTPC inputs, the Contractor shall prepare and submit typical implemented scheme in their system (Control system & HMI) on sample basis. The typical cases to be covered shall include but not be limited to the following. (i) Logics/Loops: a) Drive logics implementation for each type of binary drive along with its display in HMI. b) Sequence implementation along with its display in HMI. c) Single non-cascade controller implementation. d) Cascade loop implementation.

e) Master slave implementation with different slave combination.

f) Temperature & pressure compensation for flow signals & pressure compensation for level signals as applicable.

(ii) HMI Functions:

a) LVS Annunciation.

b) Graphics.

c) HSR

d) Logs/Reports.

e) Calculations (Basic & Performance Calculations).

25.12.02 The above typical cases shall be finalized with the Employer through Technical Co-ordination meetings.

After review and finalization of the typical cases, the implementation of each logic & control loop shall be carried out by the Contractor based on NTPC inputs. After implementation of these logics & loops, the Contractor shall test each logic /loop and record the observations in a format to be provided by the Employer and demonstrate to Employer at Employer premises during engineering finalization. Any modifications as a result of the demonstration shall be done and documented as part of the test report along with the final scheme. Similarly, HMI functions shall also be demonstrated by the Contractor at Employer premises & the results shall be documented as part of test report.

25.12.03 During the integrated testing at the Contractor's works, only sample checks shall be done by the Employer for the items covered in above application engineering demonstration.

26.00.00 **PRE-COMMISSIONING AND COMMISSIONING FACILITIES**

26.01.00 (a) As soon as the facilities or part thereof has been completed operationally and structurally and before start-up, each item of the equipment and systems forming part of facilities shall be thoroughly cleaned and then inspected jointly by the Employer and the Contractor for correctness of and completeness of facility or part thereof and acceptability for initial pre-commissioning tests, commissioning and start-up at Site. The list of pre-commissioning tests to be performed shall be as mutually agreed and included in the Contractor's quality assurance programme as well as those included in Part-D, Section-VI and elsewhere in the Technical Specifications.

(b) The Contractor's pre-commissioning/ commissioning/start-up engineers, specially identified as far as possible, shall be responsible for carrying out all the pre-commissioning tests at Site. On completion of inspection, checking and after the pre-commissioning tests are satisfactorily over, the commissioning of the complete facilities shall be commenced during which period the complete facilities, equipments shall be operated integral with sub-systems and supporting equipment as a complete plant.

(c) All piping system shall be flushed, steam blown, air blown as required and cleanliness demonstrated using acceptable industry standards. Procedures to accomplish this work shall be submitted for approval to the Employer six months prior to the respective implementations. The Employer will approve final verification of cleanliness.

(d) The time consumed in the inspection and checking of the units shall be considered as a part of the erection and installation period.

(e) The check outs during the pre - commissioning period should be programmed to follow the construction completion schedule. Each equipment/system, as it is completed in construction and turned over to Employer's commissioning (start-up) Engineer(s), should be checked out and cleaned. The checking and inspection of individual systems should then follow a prescribed commissioning documentation [SLs(standard check list)/TS(testing schedule)/CS(commissioning schedule)] approved by the employer.

(f) The Contractor during initial operation and performance testing shall conduct vibration testing to determine the 'base line' of performance of all plant rotating equipment. These tests shall be conducted when the equipment is running at the base load, peak load as well as lowest sustained operating condition as far as practicable.

26.01.00 Contractor shall furnish the commissioning organization chart for review & acceptance of employer at least eighteen months prior to the schedule date of synchronization of 1st unit. The chart should contain:

(1.) Biodata including experience of the Commissioning Engineers.

(2.) Role and responsibilities of the Commissioning Organisation members.

(3.) Expected duration of posting of the above Commissioning Engineers at site.

26.02.00 **Initial Operation**

(a) On completion of all pre-commissioning activities/ tests and as a part of commissioning the complete facilities shall be put on 'Initial Operation' during

which period all necessary adjustments shall be made while operating over the full load range enabling the facilities to be made ready for the Guarantee Tests.

(b) The 'Initial Operation' of the complete facility as an integral unit shall be conducted for 720 continuous hours. During the period of initial operation of 720 hours, the FGD System shall operate continuously at full load for a period not less than 72 hours.

The Initial Operation shall be considered successful, provided that each item/ part of the facility can operate continuously at the specified operating characteristics, for the period of Initial Operation with all operating parameters within the specified limits and at or near the predicted performance of the equipment/ facility.

The Contractor shall intimate the Employer about the commencement of initial operation and shall furnish adequate notice to the Employer in this respect.

(c) Any loss of generation due to constraints attributable to the Employer shall be construed as Deemed Generation.

(d) An Initial Operation report comprising of observations and recordings of various parameters to be measured in respect of the above Initial Operation shall be prepared by the Contractor. This report, besides recording the details of the various observations during initial operation shall also include the dates of start and finish of the Initial Operation and shall be signed by the representatives of both the parties. The report shall have sheets, recording all the details of interruptions occurred, adjustments made and any minor repairs done during the Initial Operation. Based on the observations, necessary modifications/repairs to the plant shall be carried out by the Contractor to the full satisfaction of the Employer to enable the latter to accord permission to carry out the Guarantee tests on the facilities. However, minor defects which do not endanger the safe operation of the equipment, shall not be considered as reasons for with- holding the aforesaid permission.

26.03.00 **Guarantee Tests**

a) The final test as to prove the Functional Guarantees shall be conducted at Site by the Contractor in presence of the Employer. The contractor's Commissioning, start-up and initial operation shall make the unit ready to conduct such test. Such test will be commenced, within a period of **three (3) months** after the successful completion of Initial Operations. Any extension of time beyond the above **three (3) months** shall be mutually agreed upon.

b) These tests shall be binding on both the parties of the Contract to determine compliance of the equipment with the functional guarantee.

c) For performance/ demonstration tests instrumentations, of accuracy class shall be as per specified test codes. The numbers and location of the instruments shall be as per the specified test codes. In addition the values of parameters shall be logged from the information system provided under Employer's Distributed Digital Control Monitoring and Information system. Test will be conducted at specified load points.

d) Any special equipment, tools and tackles required for the successful completion of the Guarantee Tests shall be provided by the Contractor, free of cost.

e) The Guarantee tests and specific tests to be conducted on equipments have been brought out in detail elsewhere in the specifications.

27.00.00 **TAKING OVER**

Upon successful completion of Initial Operations and all the tests conducted to the Employer's satisfaction, the Employer shall issue to the Contractor a Taking over Certificate as a proof of the final acceptance of the equipment. Such certificate shall not unreasonably be with held nor will the Employer delay the issuance thereof, on account of minor omissions or defects which do not affect the commercial operation and/or cause any serious risk to the equipment. Such certificate shall not relieve the Contractor of any of his obligations which otherwise survive, by the terms and conditions of the Contract after issuance of such certificate.

28.00.00 **TRAINING OF EMPLOYER'S PERSONNEL**

28.01.00 **Training for Employers O&M Personnel**

The scope of service under training of Employer's engineers shall include a training module covering upto six (6) man months in the areas of Operation & Maintenance.

Such training should enable the personnel to individually take the responsibility of operating and maintaining the FGD system in a manner acceptable to the Employer.

28.02.00 **Training for Employers Engineering Personnel**

The scope of services under training for Employer's engineering personnel shall also necessarily include two (2) manmonth. This shall cover all disciplines viz, Mechanical, Electrical, C&I, & QA etc. and shall include all the related areas like

	Design familiarization, training on product design features and product design softwares of major equipment and systems, engineering, manufacturing, erection, commissioning, training on operating features of equipment, quality assurance and testing, plant visits and visits to manufacturer's works, exposure to various kinds of problems which may be encountered in fabrication, manufacturing, erection, welding etc. An indicative module of the training requirement of Employer's Engineering personnel is attached as Annexure-VII.
28.03.00	Bidder shall furnish in his offer, details of training module(s) covering above requirements which shall be subject to Employer's approval. Consolidated training period included above (i.e. 6 and 3 man months respectively for O&M and Engineering) is indicative only. Employer reserves the right to re appropriate the training period between O&M and engineering depending upon the details of training module proposed by the Bidder.
28.04.00	Exact details, extent of training and the training schedule shall be finalised based on the Bidder's proposal within two (2) months from placement of award.
28.05.00	In all the above cases, wherever the training of Employer's personnel is arranged at the works of the manufacturer's it shall be noted that the lodging and boarding of the Employer's personnel shall be at the cost of Contractor. The Contractor shall make all necessary arrangements towards the same.
28.06.00	Take off prices (product wise) should be indicated by the Bidder in the Bid Proposal Sheets. Employer reserves the right to include or exclude these item(s) during placement of Award. **Note**: For training purposes, one (1) man month implies 30 working days (excluding all intervening holidays) per person.
29.00.00	**SAFETY ASPECTS DURING CONSTRUCTION AND ERECTION** In addition to the requirements given in Erection Conditions of Contract (ECC) the following shall also cover: i) Working platforms should be fenced and shall have means of access. ii) Ladders in accordance with Employer's safety rules for construction and erection shall be used. Rungs shall not be welded on columns. All the stairs shall be provided with handrails immediately after its erection.

30.00.00 **NOISE LEVEL**

The equivalent 'A' weighted sound pressure level measured at a height of 1.5 m above floor level in elevation and at a distance of one (1) metre horizontally from the nearest surface of any equipment/machine, furnished and installed under these specifications, expressed in decibels to a reference of 0.0002 microbar, shall not exceed 85 dBA . However for Ball Mills the noise levels as per following shall also be acceptable:

a) Ball Mill < 90 dBA

31.00.00 **PACKAGING AND TRANSPORTATION**

All the equipments shall be suitably protected, coated, covered or boxed and crated to prevent damage or deterioration during transit, handling and storage at Site till the time of erection. While packing all the materials, the limitation from the point of view of the sizes of railway wagons available in India should be taken account of. The Contractor shall be responsible for any loss or damage during transportation, handling and storage due to improper packing. The Contractor shall ascertain the availability of Railway wagon sizes from the Indian Railways or any other agency concerned in India well before effecting despatch of equipment. Before despatch it shall be ensured that complete processing and manufacturing of the components is carried out at shop, only restricted by transport limitation, in order to ensure that site works like grinding, welding, cutting & preassembly to bare minimum. The Employer's Inspector shall have right to insist for completion of works in shops before despatch of materials for transportation.

32.00.00 **ELECTRICAL EQUIPMENTS/ENCLOSURES**

32.01.00 All electrical equipments and devices, including insulation, heating and ventilation devices shall be designed for ambient temperature and a maximum relative humidity as specified elsewhere in the specifications.

33.00.00 **INSTRUMENTATION AND CONTROL**

All instrumentation and control systems/ equipment/ devices/ components, furnished under this contract shall be in accordance with the requirements stated herein, unless otherwise specified in the detailed specifications.

33.01.00 All instrument scales and charts shall be calibrated and printed in metric units and shall have linear graduation. The ranges shall be selected to have the normal reading at 75% of full scale.

All scales and charts shall be calibrated and printed in Metric Units as follows:

1 Temperature - Degree centigrade (deg C)

	2. Pressure	-	Kilograms per square centimetre (Kg/cm^2). Pressure instrument shall have the unit suffixed with 'a' to indicate absolute pressure. If nothing is there, that will mean that the indicated pressure is gauge pressure.
	3. Draught	-	Millimetres of water column (mm wc).
	4. Vacuum	-	Millimeters of mercury gauge (mm Hg) or water column (mm Wcl).
	5. Flow (Gas)	-	Tonnes/ hour
	6. Flow (Steam)	-	Tonnes/ hour
	7. Flow (Liquid)	-	Tonnes / hour
	8. Flow base	-	760 mm Hg. 0 deg.C
	9. Density	-	Grams per cubic centimeter.

33.02.00 All instruments and control devices provided on panels shall be of miniaturized design, suitable for modular flush mounting on panels with front draw out facility and flexible plan-in connection at rear.

33.03.00 All electronic modules shall have gold plated connector fingers and further all input and output modules shall be short circuit proof. These shall also be tropicalised & components shall be of industrial grade or better.

34.00.00 **ELECTRICAL NOISE CONTROL**

The equipment furnished by the Contractor shall incorporate necessary techniques to eliminate measurement and control problems caused by electrical noise. Areas in Contractor's equipment which are vulnerable to electrical noise shall be hardened to eliminate possible problems. Any additional equipment, services required for effectively eliminating the noise problems shall be included in the proposal. The equipment shall be protected against ESD as per IEC-61000-2. Radio Frequency interference (RFI) and Electro Magnetic Interference (EMI) protection against hardware damage and control system mal-operations/errors shall be provided for all systems as per EN-50082-2 (1995).

35.00.00 **SURGE PROTECTION FOR SOLID STATE EQUIPMENT**

All solid state systems /equipment shall be able to withstand the electrical noise and surge as encountered in actual service conditions and inherent in a power plant and shall meet the requirements of surge protection as defined in ANSI C37.90.1-1989 on its suitable equivalent class of IEC 254-4. Details of the features incorporated and relevant tests carried out. The test certificates. etc. shall be submitted by the Bidder.

36.00.00 **INSTRUMENT AIR SYSTEM**

The instrument air supply system as supplied by the Bidder for various pneumatic control & instrumentation devices like pneumatic actuators, power cylinders, E/P converters, piping / tubing etc.

Each pneumatic instrument shall have an individual air shut - off valve. The pressure regulating valve shall be equipped with an internal filter, a 50 mm pressure gauge and a built-in filter housing blow down valve.

37.00.00 **TAPPING POINTS FOR MEASUREMENTS**

Tapping points shall include probes, wherever applicable, for analytical measurements and sampling.

For direct temperature measurement of all working media, one stub with internal threading of approved pattern shall be provided along with suitable plug and washer. The Contractor will be intimated about thread standard to be adopted.

The following shall be provided on equipment by the Bidder. The standard which is to be adopted, will be intimated to the Contractor.

i) Temperature test pockets with stub and thermowell

ii) Pressure test pockets

38.00.00 **SYSTEM DOCUMENTATION**

The Bidder shall provide drawings, system overview & description, hardware/ software details, technical literature, functional & hardware schemes, bill of material, parts list, interconnection diagrams, data sheets, erection/ installation/ commissioning procedures, instruction/ operating manuals, etc. for each of the C& I system / sub-systems/ equipment supplied under this package. The documentation shall include complete details of the C&I systems/ sub-systems/ equipment to enable review by Employer during detailed engineering stage and to provide information to plant personnel for operation & Maintenance (including quick diagnostics & trouble shooting) of these C&I systems/ sub-systems/ equipment at site. The minimum documentation requirements for C&I systems shall be as stipulated under C&I

"Techncial Data Sheets" Part of specifications. In addition to this, system documentation for control system shall include as a minimum to that specified elsewhere in the Technical Specification.

The exact format, submission schedule and contents of various documents shall be as finalised during detailed engineering stage.

38.01.00 Bill of material (instrument list) for all C&I equipment/ devices shall be furnished by the bidder in standard formats as approved by the Employer.

39.00.00 **MAINTENANCE MANUALS OF ELECTRONIC MODULES**

The Contractor shall have to furnish two (2) sets of all maintenance manual of each and every electronic card/module as employed on the various systems and equipment including peripherals etc., offered by him. The Contractor will also have to furnish the data regarding the expected failure rate of various modules and other system components. Further , the contractor shall furnish a set of operating manuals which should include block diagrams ,make, model/type ,details wiring and external connection drawings etc as required to do the testing and maintenance of the electronic modules.

LIST OF CODES AND STANDARDS

Indian Standards	Title	International and Internationally recognised standards
IS:277	Galvanised steel sheets (plain or corrugated)	
IS:655	Specification for metal air duct	
IS:800	Code of practice for use of structural steel in general building construction	BS 449:1969 BS 5950 ASA A57, 1-1952
IS:807	Code of practice for design, manufacture, erection and testing (Structural portion) of cranes and hoists 6588 (Issued by Standards Association of Australia). DIN 120:1936 (Sheet 1) DIN 120:1936 (Sheet 2) 327 part-I, 1951 BS 466 part-II, 1960 BS 644:1960 BS 1757:1951 BS 2573:part-I:1960	Draft Revision of A.S. NO. CS.2 SAA Crane and Hoist code Doc:No. BU/4 Rev
IS:875	Code of practice for design loads (other than earthquake) for buildings and structures Leading standards (issued by Canadian Standard) DIN-1055-1955 (Issued by ASA)	National Building code of Canada (1953)-Part-IV Design section 4.1

IS:1239 Part-I	Mild steel tubes	(ISO/R 65-1957) (ISO/R-64-1958) (ISO/R-65-1958) (BS 1387 : 1957)
IS:1239 Part-II	Mild steel tubulars and other wrought steel pipe fittings	BS 1387 : 1967 BS 1387 :1967 BS 1740 :1965
IS:2825	Code for unfired vessels	
IS:1520	Horizontal centrifugal pumps for clear cold and fresh water	
IS:1600	Code for practice for performance of constant speed IC Engines for general purpose	
IS:1601	Specification for perform-ance of constant speed IC Engines for general Purpose	
IS:1893	Criteria for earthquake resistant design of structures	
IS1978-1971	Line Pipe April 1969.	API Standards 5L
IS:2254-1970	Dimensions of vertical shaft motor for pumps	IEC Pub 72-1 part I NEMA Pub MG 1 1954
IS:2266	Steel wire ropes for general engineering purposes	BS :302 : 1968
IS:2312	Propellant type Ventilation fans	
IS:2365	Steel wire suspension ropes for lifts and hoists	BS : 1957

IS:3346	Method for the determination of thermal conductivity of thermal insulation materials (two slab guarded hot plate method)	DIN 52612 (Deutscher Normenausschuss) ASTM C 163-1964 (American Society of Testing and materials) ASTM C 167-1974 ASTM C 177-1963
IS:3354	Outline dimensions for electric lifts.	
IS:3401	Silica gel	
IS:3588	Specification for electrical axial flow fans	
IS:3589	Electrically welded steel pipes for water, gas and sewage (200mm to 2000 mm Nominal Diametre)	
IS:3677	Unbonded rock and slag wool for thermal insulation	
IS:3815	Point hook with shank for general engineering purposes	BS 482 - 1968 Doc.:67/3 1284 (Revision of BS 2903) (Issued BS)
IS:3895	Specification for monocrystallines semiconductor rectifier cells and stacks	
IS:3963	Roof extractor unit	
IS:3975	Mild steel wires, strips and tapes for armouring cables	
IS:4503	Shell and tube type heat Exchanger	

IS:4540	Specification for monory-stallines rectifire assembly equipment	
IS:4671	Expanded polystyrene for thermal insulation purpose	
IS:4736	Hot dip zinc coating on steel tubes	
IS:4894	Centrifugal fans	
IS:5456	Code of practice for testing of positive displacement type air compressors and exhauster (For Test Tolerance Only)	
IS:5749	Forged ramshorn hooks	Entwurf DIN 15402 Blett 1 Entwurf DIN 15402 BS 3017-1958
IS:6392	Steel pipe flanges	BS 4504 : 1969
IS:6524 Part-I	Code of practice for design of tower cranes Static and rail mounted	BS 2799 : 1956
IS:7098	Cross linked Polyethylene insulated PVC sheathed cables	Standard No. 1 to IPCEA (USA) Pub. No. 5-66-524
IS:7373	Specification for wrought aluminium and aluminium sheet and strips	
IS:7938	Air receivers for compressed air installation	
ISO:1217	Displacement compressor-Acceplance test	
ASHRAE-33 and air heating coils.	Methods of testing for rating of forced circulation air cooling	
ASHRAE-52-76 particle matter.	Air cleaning device used in general ventilation for removing	

ASHRAE-22-72	Method of testing for rating of water cooled refrigerant condensers.
ASHRAE 23-67	Methods of testing for rating of positive displacement refrigerant compressors.
ARI-450-6	Standard for water cooled refrigerant condensers.
ARI-550	Standard for centrifugal water chilling packages.
ARI-410	Standard for forced circulation air cooling and air heating coils
ARI-430/435 BS:848 (Part-1,2)	Central station AHU/Application of Central Station AHU Fans
BS:400	Low carbon steel cylinders for the storage & transport of permanent gases.
BS:401	Low carbon steel cylinders for the storage & transport of liquified gases.
CTI Code ACT-105	Acceptance test code for Water Cooling Tower.
ANSI-31.5	Refrigerant piping
ASME-PTC- 23-1958	Atmospheric Water Cooling Equipment
AMCA A-21C	Test Code for air moving devices
API:618	Reciprocating Compressor for general refinary services.

HYDRAULIC INSTITUTE STANDARDS.

HYDRANT SYSTEM MANUALS OF TAC.

TAC MANUALS OF SPRAY SYSTEM

NFPA USA/ NSC UK/ UL USA/ FM USA STANDARDS.

INDIAN EXPLOSIVES ACT.

INDIAN FACTORIES ACT.

STANDARD OF TUBULAR EXCHANGER MANUFACTURER'S ASSOCIATION.

CODE AND STANDARD FOR CIVIL WORKS

Some of the applicable Standards, Codes and references are as follows:

Excavation & Filling

IS: 2720 (Part-II, IV TO VIII, XIV, XXI, XXIII, XXIV, XXVII TO XXIX, XL) Methods of test for soils-determination for water content etc.

IS: 4701 Code of practice for earth work on canals.

IS: 9758 Guide lines for Dewatering during construction.

IS: 10379 Code of practice for field control of moisture and compaction of soils for embankment and sub-grade.

Properties, Storage and Handling of Common Building Materials

IS: 269 Specification for ordinary Portland cement, 33 grade.

IS: 383 Specification for coarse and fine aggregates from natural sources for concrete.

IS: 432 Specification for mild steel and (Parts 1&2) medium tensile steel bars and hard-drawn steel wires for concrete reinforcement.

IS: 455 Specification for Portland slag cement.

IS: 702 Specification for Industrial bitumen.

IS: 712 Specification for building limes.

IS: 808 Rolled steel Beam channel and angle sections.

IS: 1077 Specification for common burnt clay building bricks.

IS: 1161 Specification of steel tubes for structural purposes.

IS: 1363 Hexagon head Bolts, Screws and nuts of production grade C.

IS: 1364 Hexagon head Bolts, Screws and Nuts of Production grade A & B.

IS: 1367 Technical supply conditions for Threaded fasteners.

IS: 1489 Specification for Portland-pozzolana cement:

(Part-I) Fly ash based.

	(Part-II)	Calcined clay based.
	IS: 1542	Specification for sand for plaster.
	IS: 1566	Specification for hard-drawn steel wire fabric for concrete reinforcement.
	IS: 1786	Specification for high strength deformed bars for concrete reinforcement.
	IS: 2062	Specification for steel for general structural purposes.
	IS: 2116	Specification for sand for masonry mortars.
	IS: 2386 (Parts-I to VIII)	Testing of aggregates for concrete.
	IS: 3150	Hexagonal wire netting for general purpose.
	IS: 3495 (Parts-I to IV)	Methods of tests of burnt clay building bricks.
	IS: 3812	Specification for fly ash, for use as pozzolana and admixture.
	IS: 4031	Methods of physical tests for hydraulic cement.
	IS: 4032	Methods of chemical analysis of hydraulic cement.
	IS: 4082	Recommendations on stacking and storage of construction materials at site.
	IS: 8112	Specification for 43 grade ordinary portland cement.
	IS: 8500	Medium and high strength structural steel.
	IS: 12269	53 grade ordinary portland cement.
	IS: 12894	Specification for Fly ash lime bricks.
	Cast-In-Situ Concrete and Allied Works	
	IS: 280	Specification for mild steel wire for general engineering purposes.
	IS: 456	Code of practice for plain and reinforced concrete.

	IS: 457	Code of practice for general construction of plain & reinforced concrete for dams & other massive structures.
	IS: 516	Method of test for strength of concrete.
	IS: 650	Specification for standard sand for testing of cement.
	IS: 1199	Methods of sampling and analysis of concrete.
	IS: 1791	General requirements for batch type concrete mixers.
	IS: 1838 (Part-I)	Specification for preformed fillers for expansion joints in concrete pavements and structures (non-extruding and resilient type).
	IS: 2204	Code of practice for construction of reinforced concrete shell roof.
	IS: 2210	Criteria for the design of reinforced concrete shell structures and folded plates.
	IS: 2438	Specification for roller pan mixer.
	IS: 2502	Code of practice for bending and fixing of bars for concrete reinforcement.
	IS: 2505	General requirements for concrete vibrators, immersion type.
	IS: 2506	General requirements for concrete vibrators, screed board type.
	IS: 2514	Specification for concrete vibrating tables.
	IS: 2645	Specification for Integral cement water proofing compounds.
	IS: 2722	Specification for portable swing weigh batches for concrete. (single and double bucket type)
	IS: 2750	Specification for Steel scaffolding.
	IS: 2751	Code of practice for welding of mild steel plain and deformed bars for reinforced concrete construction.
	IS: 3025	Methods of sampling and test waste water.
	IS: 3366	Specification for Pan vibrators.
	IS: 3370	Code of practice for concrete structures for the storage of

	(Part I to IV)	liquids.
	IS: 3414	Code of practice for design and installation of joints in buildings.
	IS: 3550	Methods of test for routine control for water used in industry.
	IS: 3558	Code of practice for use of immersion vibrators for consolidating concrete.
	IS: 4014 (Parts I & II)	Code of practice for steel tubular scaffolding.
	IS: 4326	Code of practice for earthquake resistant design and construction of buildings.
	IS: 4461	Code of practice for joints in surface hydro-electric power stations.
	IS: 4656	Specification for form vibrators for concrete.
	IS: 4925	Specification for batching and mixing plant.
	IS: 4990	Specification for plywood for concrete shuttering work.
	IS: 4995 (Parts I & II)	Criteria for design of reinforced concrete bins for the storage of granular and powdery materials.
	IS: 5256	Code or practice for sealing joints in concrete lining on canals.
	IS: 5525	Recommendations for detailing of reinforcement in reinforced concrete work.
	IS: 5624	Specification for foundation bolts.
	IS: 6461	Glossary of terms relating to cement concrete.
	IS: 6494	Code of practice for water proofing of underground water reservoirs and swimming pools.
	IS: 6509	Code of practice for installation of joints in concrete pavements.
	IS: 7861	Code of practice for extreme weather concreting. (Parts I & II)
	IS: 9012	Recommended practice for shot concreting.
	IS: 9103	Specification for admixtures for concrete.

IS: 9417	Recommendations for welding cold worked steel bars for reinforced concrete construction.
IS: 10262	Recommended guidelines for concrete mix design.
IS: 11384	Code of practice for composite construction in structural steel and concrete.
IS: 11504	Criteria for structural design of reinforced concrete natural draught cooling towers.
IS: 12118	Specification for two-parts poly sulphide.
IS: 12200	Code of practice for provision of water stops at transverse contraction joints in masonry and concrete dams.
IS: 13311	Method of non-destructive testing of concrete.
Part-1	Ultrasonic pulse velocity.
Part-2	Rebound hammer.
SP:23	Handbook of concrete mixes
SP: 24	Explanatory Handbook on IS: 456-1978
SP: 34	Handbook on concrete reinforcement and detailing.

Precast Concrete Works

SP: 7(PartVI/ Sec.7)	National Building Code- Structural design of prefabrication and systems building.
IS: 10297	Code of practice for design and construction of floors and roofs using precast reinforced/prestressed concrete ribbed or cored slab units.
IS: 10505	Code of practice for construction of floors and roofs using pre-cast reinforced concrete units.

Masonary and Allied Works

IS: 1905	Code of Practice for Structural Safety of Buildings-Masonry walls.
IS: 2212	Code of Practice for Brickwork.

IS: 2250	Code of Practice for Preparation and use of Masonry Mortar.
SP: 20	Explanatory hand book on masonry code.

Sheeting Works

IS:277	Galvanised steel sheets (plain or corrugated).
IS: 459	Unreinforced corrugated and semi-corrugated asbestos cement sheets.
IS: 513	Cold-rolled carbon steel sheets.
IS: 730	Specification for fixing accessories for corrugated sheet roofing.
IS: 1626	Specification for Asbestos cement building pipes and pipe fittings, gutters and gutter fittings and roofing fittings.
IS: 2527	Code of practice for fixing rain water gutters and down pipe for roof drainage.
IS: 3007	Code of practice for laying of asbestos cement sheets.
IS: 5913	Methods of test for asbestos cement products.
IS: 7178	Technical supply conditions for tapping screw.
IS: 8183	Bonded mineral wool.
IS: 8869	Washers for corrugated sheet roofing.
IS: 12093	Code of practice for laying and fixing of sloped roof covering using plain and corrugated galvanised steel sheets.
IS: 12866	Plastic translucent sheets made from thermosetting polyster resin (glass fibre reinforced).
IS: 14246	Specification for continuously pre-painted galvanised steel sheets and coils.

Fabrication and Erection of Structural Steel Work

IS: 2016	Specification for plain washers.

	IS: 814	Specification for covered Electrodes for Metal Arc Welding for weld steel.
	IS: 1852	Specification for Rolling and Cutting Tolerances for Hot rolled steel products.
	IS: 3502	Specifications for chequered plate.
	IS: 6911	Specification for stainless steel plate, sheet and strip.
	IS: 3757	Specification for high strength structural bolts
	IS: 6623	Specification for high strength structural nuts.
	IS: 6649	High Tensile friction grip washers.
	IS: 800	Code of practice for use of structural steel in general building construction.
	IS: 816	Code of practice for use of Metal Arc Welding for General Construction.
	IS: 4000	Code of practice for assembly of structural joints using high tensile friction grip fasteners.
	IS: 9595	Code of procedure of Manual Metal Arc Welding of Mild Steel.
	IS: 817	Code of practice for Training and Testing of Metal Arc Welders.
	IS: 1811	Qualifying tests for Metal Arc Welders (engaged in welding structures other than pipes).
	IS: 9178	Criteria for Design of steel bins for storage of Bulk Materials.
	IS: 9006	Recommended Practice for Welding of Clad Steel.
	IS: 7215	Tolerances for fabrication steel structures.
	IS: 12843	Tolerance for erection of structural steel.
	IS: 4353	Recommendations for submerged arc welding of mild steel and low alloy steels.
	SP: 6 (Part 1 to 7)	ISI Hand book for structural Engineers.

IS: 1608	Method of Tensile Testing of Steel products other than sheets, strip, wire and tube.
IS: 1599	Method of Bend Tests for Steel products other than sheet, strip, wire and tube
IS : 228	Methods of chemical Analysis of pig iron, cast iron and plain carbon and low alloy steel.
IS : 2595	Code of Practice for Radio graphic testing.
IS : 1182	Recommended practice for Radiographic Examination of fusion welded butt joints in steel plates.
IS : 3664	Code of practice for Ultra sonic Testing by pulse echo method.
IS : 3613	Acceptance tests for wire flux combination for submerged Arc Welding.
IS : 3658	Code of practice for Liquid penetrant Flaw Detection.
IS : 5334	Code of practice for Magnetic Particle Flaw Detection of Welds.

Plastering and Allied Works

IS : 1635	Code of practice for field slaking of Building lime and preparation of putty.
IS : 1661	Application of cement and cement lime plaster finishes.
IS : 2333	Plaster-of-paris.
IS : 2402	Code of practice for external rendered finishes.
IS : 2547	Gypsum building plaster.
IS : 3150	Hexagonal wire netting for general purpose.

Acid and Alkali Resistant Lining

IS : 158	Ready mixed paint, brushing, bituminous, black, lead free, acid, alkali & heat resisting.
IS : 412	Specification for expanded metal steel sheets for general purpose.

IS : 4441	Code of practice for use of silicate type chemical resistant mortars.
IS : 4443	Code of practice for use of resin type chemical resistant mortars.
IS : 4456	Method of test for chemical resistant tiles. (Part I & II)
IS : 4457	Specification for ceramic unglazed vitreous acid resistant tiles.
IS : 4832	Specification for chemical resistant mortars.
	Part I Silicate type
	Part II Resin type
	Part III Sulphur type
IS : 4860	Specification for acid resistant bricks.
IS : 9510	Specification for bitumasitc, Acid resisting grade.

Water Supply, Drainage and Sanitation

IS : 458	Specification for concrete pipes.
IS : 554	Dimensions for pipe threads, where pressure tight joints are made on thread.
IS : 651	Specification for salt glazed stoneware pipes.
IS : 774	Flushing cisterns for water closets and urinals.
IS : 775	Cast iron brackets and supports for wash basins and sinks.
IS : 778	Copper alloy gate, globe and check valves for water works purposes.
IS : 781	Cast copper alloy screw down bib taps and stop valves for water services.
IS : 782	Caulking lead.
IS : 783	Code of practice for laying of concrete pipes.

	IS : 1172	Basic requirements for water supply, drainage and sanitation.
	IS : 1230	Cast iron rain water pipes and fittings.
	IS : 1239	Mild steel tubes, tubulars and other wrought steel fittings.
	IS : 1536	Centrifugally cast (Spun) iron pressure pipes for water, gas and sewage.
	IS : 1537	Vertically cast iron pressure pipes for water, gas and sewage.
	IS : 1538	Cast iron fittings for pressure pipe for water, gas and sewage.
	IS : 1703	Ball valves (horizontal plunger type) including float for water supply purposes.
	IS : 1726	Cast iron manhole covers and frames.
	IS : 1729	Sand cast iron spigot and socket, soil, water and ventilating pipes, fittings and accessories.
	IS : 1742	Code of practice for building drainage.
	IS : 1795	Pillar taps for water supply purposes.
	IS : 1879	Malleable cast iron pipe fittings.
	IS : 2064	Code of practice for selection, installation and maintenance of sanitary appliances.
	IS : 2065	Code of practice for water supply in building.
	IS : 2326	Automatic flushing cisterns for urinals.
	IS : 2470 (Part-I & II)	Code of practice for installation of septic tanks.
	IS : 2501	Copper tubes for general engineering purposes.
	IS : 2548	Plastic seat and cover for water-closets.
	IS : 2556 (Part 1 to 15)	Vitreous sanitary appliances (vitreous china).
	IS : 2963	Non-ferrous waste fittings for wash basins and sinks.

	IS : 3114	Code of practice for laying of cast iron pipes.
	IS : 3311	Waste plug and its accessories for sinks and wash basins.
	IS : 3438	Silvered glass mirrors for general purposes.
	IS : 3486	Cast iron spigot and socket drain pipes.
	IS : 3589	Electrically welded steel pipes for water, gas and sewage (200mm to 2000mm nominal diameter).
	IS : 3989	Centrifugally cast (Spun) iron spigot and socket soil, waste and ventilating pipes, fittings and accessories.
	IS : 4111 (Part I to IV)	Code of practice for ancillary structure in sewerage system.
	IS : 4127	Code of practice for laying of glazed stone-ware pipes.
	IS : 4764	Tolerance limits for sewage effluents discharged into inland-surface waters.
	IS : 4827	Electro plated coating of nickel and chromium on copper and copper alloys.
	IS : 5329	Code of practice for sanitary pipe work above ground for buildings.
	IS : 5382	Rubber sealing rings for gas mains, water mains and sewers.
	IS : 5822	Code of practice for laying of welded steel pipes for water supply.
	IS : 5961	Cast iron grating for drainage purpose.
	IS : 7740	Code of practice for road gullies.
	IS : 8931	Cast copper alloy fancy bib taps and stop valves for water services.
	IS : 8934	Cast copper alloy fancy pillar taps for water services.
	IS : 9762	Polyethylene floats for ball valves.
	IS : 10446	Glossary of terms for water supply and sanitation.

IS : 10592	Industrial emergency showers, eye and face fountains and combination units.
IS : 12592	Specification for precast concrete manhole covers and frames.
IS : 12701	Rotational moulded polyethylene water storage tanks.
SP: 35	Hand book on water supply and drainage.
-	Manual on Sewerage and sewage treatment (Published by CPH & EEO) As updated.

Doors, Windows and Allied Works

IS : 204	Tower Bolts
Part-I	Ferrous metals.
Part-II	Nonferrous metals.
IS : 208	Door Handles.
IS : 281	Mild steel sliding door bolts for use with padlocks.
IS : 362	Parliament Hinges.
IS : 420	Specification for putty, for use on metal frames.
IS : 1003 Part-I door	Specification for timber panelled and glazed shutters- (Part-I) shutters.
IS : 1038	Steel doors, windows and ventilators.
IS : 1081	Code of practice for fixing and glazing of metal (steel and aluminium) doors, windows and ventilators.
IS : 1341	Steel butt hinges.
IS : 1361	Steel windows for industrial buildings.
IS : 1823	Floor door stoppers.
IS : 1868	Anodic coatings on Aluminium and its alloys.
IS : 2202 (Part-II)	Specification for wooden flush door shutters (solid core type); particle board face panels and hard board face panels

IS:2209	Mortice locks (vertical type).
IS:2553	Safety glass
IS:2835	Flat transparent sheet glass.
IS:3548	Code of practice for glazing in buildings.
IS:3564	Door closers (Hydraulically regulated).
IS : 3614	Fire check doors; plate, metal covered and rolling type.
IS:4351	Steel door frames.
IS:5187	Flush bolts.
IS:5437	Wired and figured glass
IS:6248	Metal rolling shutters and rolling grills.
IS:6315	Floor springs (hydraulically regulated) for heavy doors.
IS:7196	Hold fasts.
IS:7452	Hot rolled steel sections for doors, windows and ventilators.
IS:10019	Mild steel stays and fasteners.
IS:10451	Steel sliding shutters (top hung type).
IS:10521	Collapsible gates.

R oof Water Proofing and AlliedWorks

IS:1203	Methods of testing tar and bitumen.
IS:1322	Specification for bitumen felts for water proofing and damp proofing.
IS:1346	Code of practice for water proofing of roofs with bitumen felts.
IS:1580	Specification for bituminous compound for water proofing and caulking purposes.

IS:3067	Code of practice for general design details and preparatory work for damp proofing and water proofing of buildings.
IS:3384	Specification for bitumen primer for use in water proofing and damp proofing.

Floor Finishes and Allied Works

IS:1237	Specification for cement concrete flooring tiles.
IS:1443	Code of practice for laying and finishing of cement concrete flooring tiles.
IS:2114	Code of practice for laying in-situ terrazzo floor finish.
IS:2571	Code of practice for laying in-situ cement concrete flooring.
IS:3462	Specification for unbacked flexible PVC flooring.
IS:4971	Recommendations for selection of industrial floor finishes.
IS:5318	Code of practice for laying of flexible PVC sheet and tile flooring.
IS:8042	Specification for white portland cement.
IS:13801	Specification for chequered cement concrete flooring tiles.

Painting and Allied Works

IS:162	Specification for fire resisting silicate type, brushing, for use on wood, colour as required.
IS:1477	Code of practice for painting of ferrous metals in buildings.
Part-I	Pretreatment.
Part-II	Painting.
IS:1650	Specification for colours for building and decorative finishes.
IS:2074	Specification for red oxide-zinc chrome, priming, ready mixed paint air drying.
IS:2338	Code of practice for finishing of wood and wood based materials.
Part-I	Operations and workmanship

	Part-II	Schedules
	IS:2395	Code of practice for painting concrete, masonry and plaster surfaces.
	Part-I	Operations and workmanship.
	Part-II	Schedule.
	IS:2524	Code of practice for painting of nonferrous metals in buildings.
	Part-I	Pretreatment.
	Part-II	Painting.
	IS:2932	Specification of synthetic enamel paint, exterior, under-coating and finishing.
	IS:2933	Specification enamel paint, under coating and finishing.
	IS:4759	Code of practice for hot dip zinc coating on structural steel and other allied products.
	IS:5410	Specification for cement paint
	IS:5411 (Part-I)	Specification for plastic emulsion paint-for exterior use
	IS:6278	Code of practices for white washing and colour washing.
	IS:10403	Glossary of terms relating to building finishes.
	Piling and Foundation	
	IS:1080	Code of practice for design and construction of simple spread foundations.
	IS:1904	Code of practice for design and construction of foundations in Soils; General Requirements.
	IS:2911	Code of practice for designs and construction of Pile foundations (Relevant Parts).
	IS:2950 (Part-I)	Code of practice for designs and construction of Raft foundation.
	IS:2974 (Part-I TO V)	Code of practice for design and construction of machine foundations.
	IS:6403	Code of practice for determination of Allowable Bearing pressure on Shallow foundation.

IS:8009	Code of practice for calculation of settlement of foundation subjected to symmetrical vertical loads.
Part-I	Shallow foundations.
Part-II	Deep foundations.
IS:12070	Code of practice for design and construction of shallow foundations on rocks.
DIN:4024	Flexible supporting structures for machines with rotating machines.
VDI:2056	Criteria for assessing mechanical vibrations of machines.
VDI:2060	Criteria for assessing rotating imbalances in machines.
Stop Log and Trash Rack	
IS:4622	Recommendations for fixed - wheel gates structural design.
IS:5620	Recommendations for structural design criteria for low head slide gates.
IS:11388	Recommendations for design of trash rack for intakes.
IS:11855	General requirements for rubber seals for hydraulic gates.
Roads	
IRC:5	Standard specifications and Code of practice for road bridges, section-I general Features of Design.
IRC:14	Recommended practice of 2cm thick bitumen and tar carpets.
IRC:16	Specification for priming of base course with bituminous primers.
IRC:19	Standard specifications and code of practice for water bound macadam.
IRC:21	Standard specifications and Code of practice for road bridges, section-III - Cement concrete (plain and reinforced).
IRC:34	Recommendations for road construction in waterlogged areas.
IRC:36	Recommended practice for the construction of earth embankments for road works.
IRC:37	Guidelines for the Design of flexible pavements.
IRC:56	Recommended practice for treatment of embankment slopes for erosion control.
IRC:73	Geometric design standards for rural (non-urban) highways.
IRC:86	Geometric Design standards for urban roads in plains.

IRC:SP:13	Guidelines for the design of small bridges & culverts.
IRC - Publication	Ministry of Surface Transport (Roads Wing), Specifications for road and bridge works.
IS:73	Specification for paving bitumen

Loadings

IS:875 (Pt. I to V)	Code of practice for design loads other than earthquake) for buildings and structures.
IS:1893	Criteria for earthquake resistant design of structures.
IS:4091	Code of Practice for design and construction of foundation for transmission line towers & poles.
IRC:6	Standard specifications & code of practice for road bridges, Section-II Loads and stresses.
M.O.T.	Deptt. of railways Bridge Rules.

Safety

IS:3696 (Part I & II)	Safety code for scaffolds and ladders.
IS:3764	Safety code for excavation work.
IS:4081	Safety code for blasting and related drilling operations.
IS:4130	Safety code for demolition of buildings.
IS:5121	Safety code for piling and other deep foundations.
IS:5916	Safety code for construction involving use of hot bituminous materials.
IS:7205	Safety code for erection on structural steelwork.
IS:7293	Safety code for working with construction machinery.
IS:7969	Safety code for handling and storage of building materials
IS:11769	Guidelines for safe use of products containing asbestos.

- Indian Explosives Act. 1940 as updated.

Architectural design of buildings

SP:7	National Building Code of India
SP:41	Hand book on functional requirements of buildings (other than industrial buildings)

Miscellaneous

IS:802	Code of practice for use of structural steel in
(Relevant parts)	overhead transmission line towers.
IS:803	Code of practice for design, fabrication and erection of vertical mild steel cylindrically welded in storage tanks.
IS:10430	Creteria for design of lined canals and liner for selection of type of lining.
IS:11592	Code of practice for selection and design of belt conveyors.
IS:12867	PVC handrails covers.
CIRIA	Design and construction of buried thin-wall pipes.
Publication	

REFERENCE CODES AND STANDARDS FOR CONTROL AND INSTRUMENTATION

The design, manufacture, inspection, testing & installation of all equipment and system covered under this specification shall conform to the latest editions of codes and standards mentioned below and all other applicable VDE, IEEE, ANSI, ASME, NEC, NEMA, ISA AND Indian Standards and their equivalents.

Temperature Measurements

1. Instrument and apparatus for temperature measurement - ASME PTC 19.3 (1974).
2. Temperature measurement - Thermocouples ANSI MC 96.1 - 1982.
3. Temperature measuremnet by electrical Resistance thermometers - IS:2806.
4. Thermometer - element - Platinum resistance - IS:2848.

Pressure Measurements

1. a) Instruments and apparatus for pressure measurement - ASME PTC 19.2 (1964).
   b) Electonic transmitters BS:6447.
2. Bourdon tube pressure and vacuum gauges - IS:3624 - 1966.
3. Process operated switch devices (Pr. Switch) BS-6134.

Flow Measurements

Instruments and apparatus for flow measurements - ASME PTC 19.5 (1972) Interim supplement, Part-II.

Measurement of fluid flow in closed conduits - BS-1042.

Electronic Measuring Instrument & Control Hardware/ Software

1. Automatic null balancing electrical measuring instruments - ANSI C 39.4 (Rev. 1973): IS:9319.
2. Safety requirements for electrical and electronic measuring and controling instrument - ANSI C 39.5 - 1974.
3. Compatability of analog signals for electronic industrial process instruments - ISA - S 50.1 (1982) ANSI MC 12.1 - 1975.
4. Dynamic response testing of process control instrumentation ISA - S 26 (1968).
5. Surge Withstand Capability (SWC) tests - ANSI C 37.90 a/IEEE-472 or suitable class of IEC-255-4 equivalent to ANSI C37.90a/IEEE-472.
6. Printed circuit boards - IPC TM - 650, IEC 326 C.
7. General requirement and tests for printed wiring boards - IS 7405 (Part-I) 1973.
8. Edge socket connectors - IEC 130-11.
9. Requirements and methods of testing of wire wrap terminations DIN 41611 Part-2.
10. Dimensions of attachment plugs & receptacles - ANSI C 73 - 1973 (Supplement ANSI C 73 a - 1980).
11. Direct acting electrical indicating instrument - IS:1248 - 1968 (R).
12. Standard Digital Interface for Programmable Instrumentation - IEEE-488.2 - 1990.
13. Information Processing Systems - Local Area Networks - Part 2 : Logical Link Control - IEEE-802.2 - 1989.
14. Standard for Local Area Networks : Carrier Sense Multiple Access with Collision Detection - IEEE-802.3 - 1985.
15. Supplements A, B, C and E to Carrier Sense Multiple Access with Collision Detection - IEEE-802.3 - 1988.

16. Standard for Local Area Networks : Token - Passing Bus Access Method - IEEE-802.4 - 1985.

17. Standard for Local Area Networks : Token - Ring Access Method and Physical Layer Specification - IEEE-802.5 - 1985.

18. IEEE Guide to Software Requirements Specifications - IEEE-830 - 1984.

19. Hardware Testing of Digital Process Computers - ISA RP55.1 - 1983.

20. Electromagnetic Susceptibility of Process Control Instrumentation - SAMA PMC 33.1 - 1978.

21. Interface Between the Data Terminal Equipment and Data Circuit - Terminating Equipment Employing Serial Binary Data Interchange - EIA-232-D-1987.

22. Electromagnetic Compatibility for Industrial Process Measurement and Control Equipment, Part 3 : Radiated Electromagnetic Field Requirements - IEC 801-3-1984.

Instrument Switches and Contact

1. Contact rating - AC services NEMA ICS 2 - 1978 (with revision through May 1983), Part - 2-125, A6000.

2. Contact rating - DC services NEMA ICS 2-1978 Part-2 125, N600.

Enclosures

1. Type of Enclosures - NEMA ICS Part - 6 - 1978 (with Rev. 1 4/80) through 110.22 (Type 4 to 13).

2. Racks, panels and associated equipment - EIA : RS - 310 C- 1983 (ANSI C 83.9 - 1972).

3. Protection class for Enclosures, cabinets, control panels & desks - IS:2147 - 1962.

Apparatus, enclosures and installation practices in hazardous area

1. Classification of hazardous area - NFPA 70 - 1984, Article 500.

2. Electrical Instruments in hazardous dust location - ISA - 512.11, 1973.

3. Instrinsically safe apparatus - NFPA 493 1978.

4. Purged and pressurised enclosure for electrical equipment in hazardous location - NFPA 496-1982.

5. Enclosures for Industrial Controls and Systems - NEMA IS 1.1 - 1977.

Sampling System

1. Stainless steel material of tubing and valves for sampling system - ASTMA 296-82, Grade 7 P 316.
2. Submerged helical coil heat exchangers for sample coolers ASTM D11 92-1977.
3. Water and steam in power cycle - ASME PTC 19.11.
4. Standard methods of sampling system - ASTM D 1066-99.

Annunciators

1. Specifications and guides for the use of general purpose annunciators - ISA S 19.1, 1979.
2. Surge withstand capability tests - ANSI C 37.90a - 1989/IEEE-472 or suitable class of IEC 255-4 equivalent to ANSI C37.90a 1989/IEEE-472
3. Damp heat cycling test - IS:2106
4. Specification for Electromagnetic Susceptibility - SAMA DMC 33, 1/78

Protections

1. Relays and relay system associated with electric power apparatus. ANSI C 37.90, 1 - 1989.
2. General requirements & tests for switching devices for control and auxiliary circuits including contactor relays - IS:6875 (Part-I) - 1973.
3. Turbine water damage prevention - ASME TDP-1-1980.
4. Boiler safety interlocks - NFPA 85 - 2011 or latest version.

UPS System

1. Practices and requirements for semi-conductor power rectifiers - ANSI C 34.2, 1973.
2. Relays and relays system associated with electrical power apparatus - ANSI C 3.90 - 1983.
3. Surge withstand capability test - ANSI C 37.90 1 -1989.
4. Performance testing of UPS - IEC 146.
5. Stationary cells & Batteries Lead Acid type (with tubular positive plates) specification IS-1651-1991.

6. Recommended practice for sizing large lead storage batteries for generating stations & sub-stations - IEEE-485-1985.

7. Printed Circuit Board - IPC TM 650, IEC 326C.

8. General Requirements & tests for printed wiring boards, IS:7405 (Part-I) 1973.

Control Valves

1. Control valve sizing - Compressible & Incompressible fluids - ISA S 75.01-1985.

2. Face to face dimensions of control valves - ANSI B 16.00 - 1973.

3. ISA Hand Book of Control Valves - (ISBN : B: 1047-087664-234-2).

4. Codes for pressure piping - ANSI B 31.1

5. Control Valve leak class - ISA RP 39.6

Process Connection & Piping

1. Codes for pressure piping "power piping" - ANSI B 31.1.

2. Seamless carbon steel pipe ASTM - A - 106.

3. Forged & Rolled Alloy steel pipe flanges, forged fittings and valves and parts - ASTM - A - 182.

4. Material for socket welded fittings - ASTM - A - 105.

5. Seamless ferritic alloy steep pipe - ASTM - A - 335.

6. Pipe fittings of wrought carbon steel and alloy steel - ASTM - A - 234.

7. Composition bronze of ounce metal castings - ASTM - B - 62.

8. Seamless Copper tube, bright annealed - ASTM - B - 168.

9. Seamless copper tube - ASTM - B - 75.

10. Dimension of fittings - ANSI - B - 16.11.

11. Valves flanged and butt welding ends - ANSI - B - 16.34.

Instrument Tubing

1. Seamless carbon steel pipe - ASTM - A 106.

2. Material of socketweld fittings - ASTM - A105.

3. Dimensions of fittings - ANSI - B - 16.11.

4. Code for pressure piping, welding, hydrostatic testing - ANSI B 31.1.

Cables

1. Thermocouples extension wires/cables - ANSI MC 96.1 - 1992.
2. Requirements for copper conductor-Wiring cables for telecommunications & information processing system - VDE:0815.
3. Colour coding of single or multi-pair cables - ICEA - S - 61-402 (third edition) NEMA WCS - 1979 with revisions thorugh 2/83.
4. Insulation & Sheathing compounds for cables : VDE 0207 (Part-4, 5 & 6).
5. Guide design and installation of cable systems in power generating stations (insulation, jacket materials) - IEEE Std. 422-1977.
6. Rules for Testing insulated cables and flexible cables : VVDE - 0472
7. Requirements of vertical flame propagation test - IEEE 383 - 1974 (R 1980)
8. Standard specification for tinned soft or annealed copper wire for electrical purpose - ASTM B-33-81.
9. Oxygen index and temperature index test - ASTM D - 2863.
10. Smoke density measurement test - ASTMD - 2843.
11. Acid gas generation test - IEC - 754 - 1.
12. Swedish Chimney test - SEN - 4241475 (F3).
13. Teflon (FEP) insulation & sheath test - ASTMD - 2116.
14. Thermocouple compensating cables - Testing requirements & sampling plan IS:8784.
15. PVC insulated electric cables for working voltage upto and including 1100 V - IS:1554 (Part-I).

Cable Trays, Conduits

1. Guide for design and installation of cable systems in power generating staiton (Cable trays, support systems, conduits) - IEEE Std. 422, 1977, NEMA VE-1 1979, NFPA 70-1984.
2. -do- Test Standards. NEMA VE-1-1979.
3. Zinc coating "hot dip" on assembled products for galvanising of carbon steel cable trays - ASTMA - 386-78.

Public Address System

1. Specifications for lod speakers - IS:7741 (Part-I, II and III)
2. Code of safety requirement for electric mains operated audio amplifiers - IS:1301
3. Specification for Public Address Amplifiers - IS:10426.
4. Code of practice for outdoor installation of PA system - IS:1982.
5. Code of practice for installation for indoor amplifying and sound distribution system - IS:1881.
6. Basic environmental testing procedures for electronic and electrical items - IS:9000.
7. Characteristics and methods of measurements for sound system equipment - IS:9302
8. Code of practice of electrical wiring installations (System voltage not exceeding 650 volts) - IS:732
9. Rigid steel conduits for electric wiring - IS:9537 (Part-I and II)
10. Fittings for rigid steel conduits for electrical wiring - IS:2667
11. Degree of protection provided by enclosure for low voltage switchgear and control gear - IS:2147.

Vibration Monitoring System

1. API 670 - 1994
2. BS : 4675 Part-2

ANNEXURE-I

MFGR.'s LOGO	MANUFACTURER'S NAME AND ADDRESS	**MANUFACTURING QUALITY PLAN**		PROJECT : PACKAGE : CONTRACT NO. : MAIN-SUPPLIER:
		ITEM : SUB-SYSTEM:	QP NO.: REV.NO.: DATE: PAGE: …. OF….	

SL. NO	COMPONENT & OPERATIONS	CHARACTERISTICS	CLASS	TYPE OF CHECK	QUANTUM OF CHECK		REFERENCE DOCUMENT	ACCEPTANCE NORMS	FORMAT OF RECORD		AGENCY			REMARKS
					M	C / N					M	C	N	
1.	2.	3.	4.	5.	6.		7.	8.	9.	D*	** 10.			11.

		LEGEND: * RECORDS, INDENTIFIED WITH "TICK" (√) SHALL BE ESSENTIALLY INCLUDED BY SUPPLIER IN QA DOCUMENTATION. ** **M:** MANUFACTURER/SUB-SUPPLIER C**:** MAIN SUPPLIER, **N**: NTPC **P:** PERFORM **W**: WITNESS AND **V:** VERIFICATION. AS APPROPRIATE, **CHP:** NTPC SHALL IDENTIFY IN COLUM "N" AS ' W"		DOC. NO.:	REV…… CAT…..
MANUFACTURER/ SUB-SUPPLIER	MAIN-SUPPLIER		FOR NTPC USE	REVIEWED BY	APPROVED BY / APPROVAL SEAL
SIGNATURE					

FORMAT NO.: QS-01-QAI-P-09/F1-R1 **1/1** **ENGG. DIV./QA&I**

ANNEXURE-II

SUPPLIER'S LOGO	SUPPLIER'S NAME AND ADDRESS	**FIELD QUALITY PLAN**		PROJECT : PACKAGE : CONTRACT NO. : MAIN-SUPPLIER:
		ITEM : SUB-SYSTEM:	QP NO.: REV. NO.: DATE: PAGE: …. OF….	

SL. NO	ACTIVITY AND OPERATION	CHARACTERISTICS / INSTRUMENTS	CLASS OF CHECK #	TYPE OF CHECK	QUANTUM OF CHECK	REFERENCE DOCUMENT	ACCEPTANCE NORMS	FORMAT OF RECORD	D*	REMARKS
1.	2.	3.	4.	5.	6.	7.	8.	9.		10.

MANUFACTURER/ SUB-SUPPLIER	MAIN-SUPPLIER
SIGNATURE	

LEGEND: * RECORDS, INDENTIFIED WITH "TICK" (√) SHALL BE ESSENTIALLY INCLUDED BY SUPPLIER IN QA DOCUMENTATION.
LEGEND TO BE USED: CLASS # : A = CRITICAL, B=MAJOR, C=MINOR; '**A**' SHALL BE WITNESSED BY NTPC FQA, '**B**' SHALL BE WITNESSED BY NTPC ERECTION / CONSTRUCTION DEPTT. AND '**C**' SHALL BE WITNESSED BY MAIN SUPPLIER (A & B CHECK SHALL BE NTPC CHP STAGE)

FOR NTPC USE

DOC. NO.:		REV……
REVIEWED BY	APPROVED BY	APPROVAL SEAL

FORMAT NO.: QS-01-QAI-P-09/F2-R1 1/1 **ENGG. DIV./QA&I**

ANNEXURE-III

एनटीपीसी NTPC	Project : Stage : Package : Supplier : Contractor No. :	LIST OF ITEMS REQUIRING QUALITY PLAN AND SUB-SUPPLIER APPROVAL SUB-SYSTEM :	DOC. NO.: REV. NO.: DATE : PAGE : OF

S. N.	Item	QP/ Insp. Cat.	QP No.	QP Sub. Schedule	QP approval schedule	Proposed sub-supplier	Place	Sub-suppliers approval status / category	Sub-supplier Details submission schedule	Remarks

LEGENDS

SYSTEM SUPPLIER/SUB-SUPPLIER APPROVAL STATUS CATEGORY (SHALL BE FILLED BY NTPC)

A – **For these items proposed vendor is acceptable to NTPC. To be indicated with letter "A" in the list alongwith the condition of approval, if any.**

DR **– For these items "Detailed required" for NTPC review. To be identified with letter "DR" in the list.**

NOTED **– For these items vendors are approved by Main Supplier and accepted by NTPC without specific vendor approval from NTPC. To be identified with "NOTED.'**

QP/INSPN CATEGORY:

CAT-I **: For these items the Quality Plans are approved by NTPC and the final acceptance will be on physical inspection witness by NTPC.**

CAT-II **: For these items the Quality Plans approved by NTPC. However no physical inspection shall be done by NTPC. The final acceptance by NTPC shall be on the basis review of documents as per approved QP.**

CAT-III **: For these items Main Supplier approves the Quality Plans. The final acceptance by NTPC shall be on the basis certificate of conformance by the main supplier.**

UNITS/WORKS **: Place of manufacturing Place of Main Supplier of multi units/works.**

ANNEXURE-IV

एनटीपीसी NTPC	Project : Stage : Package : Contractor : Contractor No. :	STATUS OF ITEM REQUIRING QP& SUB-SUPPLIER APPROVAL	DOC. NO.: REV. NO.: DATE : PAGE : OF

S. N.	Item / Service	QP/ Insp. Cat.	QP Sub. Schedule Approval schedule	Date of sub-submission	Date of comm t Appl.	Status Code C/II/I	Proposed Sub-suppliers	Place of manufacturing works	Approval Status	Sub-supplier detail submission schedule	Remarks

FORMAT 1/1 Engg. Div. / QA&I

ANNEXURE-V

एनटीपीसी NTPC	Project : Stage : Contractor : Contractor No. : System :	**FIELD WELDING SCHEDULE** **(To be raised by the contractor)** **Welding Code: ……**	**DOC. NO.:** **REV. NO.:** **DATE :** **PAGE : OF**

Sl. No.	DRG No. for Weld Location and Identification mark	Description of parts to welded	Matl. Spec.	Dimensions		Process of welding	Type of Weld	Electrode filler spec.	WPS. No.	Min. pre-heat	Heat treatment		NDT method/ Quantum	REF		Remarks
											Temp.	Holding time		Spec. No.	ACC Norm Ref.	

NOTES:

SIGNATURE

FORMAT	1/1	**Engg. Div. / QA&I**

S.No	Description of Drgs/Docs	No of Prints	No of CD ROMs/DVDs/Portable Hard Disk
1	Drawings, Data sheets, Design calculations, Purchase specifications and other documents		
	First submission and submission with major changes		
	▪ Layout (A0&A1 sizes)	4	-
	▪ Other Drawings/Documents (A0&A1 sizes)	2	-
	▪ P&ID (All sizes)	4	-
	a) Final drawings/documents (Directly to site)	6	2
	b) "As Built" Drawing/Documents (Directly to site)	6	2
	c) Analysis reports of Equipments / piping /structures components/system employing software packages as detailed in the specifications.	2	2
2	Erection Manual (Directly to site)	4 sets	2
3	Operation & Maintenance manual i) First Submission	1 set	--
	ii) Final Submission (Directly to site)	4 sets	2
4	Plant Hand Book i) First Submission	1	1
5	Commissioning and Performance Test Procedure manual i) First Submission	1 set	--
	ii) Final Submission (Directly to site)	4 sets	2

S.No	Description of Drgs/Docs	No of Prints	No of CD ROMs/DVDs/Portable Hard Disk
6	Performance and Functional Guarantee Test Report i) First Submission	2 sets	--
	ii) Approved Copies (Direct to Site)	4 sets	2
7	Project Completion Report (Directly to site)	6 sets	2
8	QA programme including Organisation for implementation and QA system manual(with revisions)	1	--
9	Vendor details in respect of proposed vendors including contractor's evaluation report.	2	--
10	Manufacturing QPs, Field QPs, Field welding schedules and their reference document like test procedures, WPS, POR etc i) For review/comment	1	--
	ii) Approved final copies of Field QPs, Field welding schedules and their reference document like test procedures, WPS, POR etc (Direct to Site)	4	2
11	Welding Manual, Heat Treatment Manuals, Storage & preservation manuals i) For review/comment	1 set	--
	ii) Approved copies (Direct to Site)	4 sets	2
12	QA Documentation Package for items / equipment manufactured and despatched to site	2 sets	2
13	QA Documentation Package for field activities on equipment/systems at site	2 sets	2

PRODUCT	AREAS OF TRAINING REQUIEMENT			
	PRODUCT DESIGN	**Plant Visit**	**Visit to Manufacturer's Work**	**Operation & Maintenance of Plant**
FGD	Layout & model of FGD area, cable & piping trestles etc. **FGD** • Mass balance, Design, selection and sizing calculations of FGD • Training on factors affecting sizing/ efficiency of FGD system, equipments & auxiliaries • Materials for FGD & selection • Basic concepts, Design and sizing calculations on slurry systems including piping, valves, etc.. • FGD electrical system • FGD control system Erection strategies, erection procedures Performance as per applicable code and demonstration tests.	Familiarization with various system and equipment Performance, data collection analysis and review O&M feed back Operation history of various equipments and system Failure analysis	Manufacturing process of Absorber and equipments Welding process Testing facilities Product development in process Future plan for technology induction R&D work in progress	Control philosophy operation, notices, logic & protection schemes, O&M manual familiarization O&M issues. Familiarization of special maintenance techniques Special tool and tackles familiarization
MANMONTH	**2**	**0.5**	**0.5**	**6**

NTPC Limited

(A Government of India Enterprise)

NORTH KARANPURA SUPER THERMAL POWER PRO□ECT (□□□□0MW)

PART - D

ERECTION CONDITIONS OF CONTRACT

SECTION – VI

TECHNICAL SPECIFICATION

FOR

FLUE GAS DESULPHURISATION (FGD) SYSTEM PACKAGE

BIDDING DOCUMENT NO.: CS-4410-10□-2

NTPC Limited

(A Government of India Enterprise)

NORTH KARANPURA SUPER THERMAL POWER PRO□ECT (□□□□0MW)

PART - D

ERECTION CONDITIONS OF CONTRACT

SECTION – VI

TECHNICAL SPECIFICATION

FOR

FLUE GAS DESULPHURISATION (FGD) SYSTEM PACKAGE

BIDDING DOCUMENT NO.: CS-4410-10□-2

(This document is meant for the exclusive purpose of bidding against this Package and shall not be transferred, reproduced or otherwise used for purposes other than that for which it is specifically issued).

PART - D

ERECTION CONDITIONS OF CONTRACT

ERECTION CONDITIONS OF CONTRACT

PART - D

CONTENTS

C□□□□ N□.	D□□□r□□□□□	P□□□ N□.
1.00.00	General	1
2.00.00	Regulation of Local Authorities and Statutes	1
3.00.00	Welding of Pressure Parts and High Pressure Piping	1
4.00.00	Heat Treatment	2
5.00.00	Weld Edge Preparation	3
6.00.00	Cleaning and Servicing	3
7.00.00	Field Welding Schedule	3
8.00.00	Site Run Miscellaneous Piping	4
9.00.00	Thermal Expansions	4
10.00.00	Piping Supports	4
11.00.00	Pressure Testing	5
12.00.00	Thermowells and Flow Nozzles	5
13.00.00	Insulation, Lagging and Cladding	5
14.00.00	Code Requirements	7
15.00.00	Electrical safety regulations	7
16.00.00	Removal of Material	8
17.00.00	Inspection, Testing and Inspection Certificates	8
18.00.00	Access to site and Works on Site	8
19.00.00	Contractor's Site Office Establishment	8
20.00.00	Co-operation with other contractors	9

C□□□□ N□.	D□□□r□□□□	P□□□ N□.
21.00.00	Discipline of Workmen	9
22.00.00	Contractor's Field Operation	9
23.00.00	Photographs and Progress Report	10
24.00.00	Man-Power Report	10
25.00.00	Protection of Work	10
26.00.00	Employment of Labour	10
27.00.00	Facilities to be provided by the Employer	11
28.00.00	Facilities to be provided by the Contractor	11
29.00.00	Lines and Grades	12
30.00.00	Fire Protection	13
31.00.00	Security	13
32.00.00	Contractor's Area Limits	13
33.00.00	Contractor's Co-operation with the Employer	14
34.00.00	Pre-commissioning and Commissioning Activities	14
35.00.00	Materials Handling and Storage	16
36.00.00	Construction Management	18
37.00.00	Field Office Records	20
38.00.00	Contractor's Materials Brought on to Site	21
39.00.00	Protection of Property and Contractor's Liability	21
40.00.00	Painting	22
41.00.00	Insurance	22
42.00.00	Unfavourable Working Conditions	23
43.00.00	Protection of Monuments and Reference Points	23
44.00.00	Work & Safety Regulations	23

Clause No.	Description	Page No.
45.00.00	Foreign Personnel	33
46.00.00	Foundation Dressing & Grouting for Equipment/Equipment Bases	34
47.00.00	Shaft Alignments	35
48.00.00	Dowelling	35
49.00.00	Check Out of Control Systems	35
50.00.00	Commissioning Spares	35
51.00.00	Cabling	36
52.00.00	Equipment Delivery and Erection	37
53.00.00	Welding-Special Requirements	43
54.00.00	Deviations Dispositioning	44
55.00.00	Non-Destructive Testing (NDT)	44
56.00.00	Testing Equipment & Facilities	44
Annexure-I	Standard Check List	45
Annexure-II	Brief Write-up on the contents of testing schedule/commissioning schedule	52
Annexure-III	Safety Plan	53

1.00.00	**GENERAL**
1.01.00	The following provisions shall supplement the conditions already contained in the other parts of these specifications and documents and shall govern that portion of the work of this contract which is to be performed at site. The erection requirements and procedures not specified in these documents shall be in accordance with the recommendations of the equipment manufacturer, or as mutually agreed to between the Employer and the Contractor prior to commencement of erection work.
1.02.00	The Contractor upon signing of the Contract shall, in addition to a Project Co-ordinator, nominate another responsible officer as his representative at Site suitably designated for the purpose of overall responsibility and co-ordination of the Works to be performed at Site. Such a person shall function from the Site office of the Contractor during the pendency of Contract.
2.00.00	**REGULATION OF LOCAL AUTHORITIES AND STATUTES**
2.01.00	In addition to the local laws and regulations, the Contractor shall also comply with the Minimum Wages Act and the Payment of Wages Act (both of the Government of India) and the rules made there under in respect of its labour and the labour of its sub-contractors currently employed on or connected with the contract.
2.02.00	All registration and statutory inspection fees, if any, in respect of his work pursuant to this Contract shall be to the account of the Contractor. However, any registration, statutory inspection fees lawfully pay-able under the provisions of the Indian Boiler Regulations and any other statutory laws and its amendments from time to time during erection in respect of the plant equipment ultimately to be owned by the Employer, shall be to the account of the Employer. Should any such inspection or registration need to be re-arranged due to the fault of the Contractor or his Sub-Contractor, the additional fees for such inspection and/or registration shall be borne by the Contractor.
□.00.00	**WELDING OF PRESSURE PARTS AND HIGH PRESSURE PIPING** The welding of all pressure parts and high pressure piping shall be in accordance with the following requirements:
3.01.00	**Q□□□□□□□□□□□□ □□W□□d Pr□□□d□r□□** Only qualified welding procedures as per ASME Section IX shall be used by contractor at site. Procedure qualification records along with WPS shall be submitted to NTPC for review. Welding procedure shall indicate all essential and non-essential parameters as per ASME Section IX. Makes of welding consumables shall be subject to employer's approval.
3.02.00	**W□□d□r□□ Q□□□□□□□□□□□□** Only welders who are qualified in accordance with the latest applicable requirements of the Indian Boiler Regulations, shall be permitted to perform any welding work on the pressure parts and its attachment welding. In addition to such statutory qualification requirements, the welders shall also undergo a satisfactory

	pre-production qualification test to be conducted by the Contractor at site as per ASME Sec IX in presence of employer's representative(s), prior to performing work under these specifications. The services of an independent testing laboratory shall be retained by the Contractor to perform welder qualification tests for welders. All the welders carrying out welding at site shall carry an identification badge, which shall indicate the category and the grade of welding for which they have been tested and authorised to carry out welding.
3.03.00	**R□□□rd□** Welders performance shall be monitored regularly and record of their performance shall be maintained by contractor in a manner acceptable to the employer. Contractor shall maintain such records including record of procedure qualification & welder qualification and hand-over to the employer at the end of work.
3.04.00	**MARKING** On completion of each welded joint, the welder shall mark his regularly assigned identification mark near the joint. The welder's identification numbers, inspection stamps or code symbol stamps and any other information shall not be directly stamped on any alloy steel piping. In alloy steel piping, all such information shall be stamped on separate marking plate which shall be tack welded on pipe near the weld.
4.00.00	**HEAT TREATMENT**
4.01.00	Pre-heating, post-heating and post-weld stress relief operations of all welds, shall be performed in accordance with the requirements of applicable code. Local post weld stress relieving heat treatments shall be adopted only in cases where it is normally impracticable to subject the entire assembly as such for stress relieving operations. Heating may be by means of electric induction coils or electric resistance coils. Oxy-acetylene flame heating or exothermic chemical heating methods will not be permitted. Complete recording of the temperatures through out the stress relieving cycle of the material and the weld subjected to heat treatment shall be made by means of a potentiometric recorder. Recorders other than those of potentiometric type shall not be used for such temperature recording during stress relieving operations. The contractor & employer's representative, at start and at the end of HT Cycle shall sign the time and temperature charts for heat-treatment.
4.02.00	Not Used.
4.03.00	After setting up the weld joint for heat treatment operation, the Employer's signature shall be obtained on the strips chart of the recorder prior to starting of heat treatment cycle. The right hand corner of the strip chart at the starting point of the heat treatment cycle shall contain details like the weld number, material, diameter and thickness, method of heating adopted, prescribed ranges of heat treatment temperatures, date of heat treatment, reference to item number of the Field welding Schedule (as specified at clause no 7.00.00- of this chapter) etc.

□.00.00 WELD EDGE PREPARATION

Preparation at site of weld joint shall be in accordance with details acceptable to the Employer. Wherever possible, machining or automatic flame cutting shall be used for edge preparation. Hand flame cutting will be permitted only where edge preparation otherwise is impractical. All slag shall be removed from cuts and all the hand cuts shall be ground smooth to the satisfaction of the Employer. Flame cutting of alloy steel pipe shall be avoided. Wherever such cutting is done, a 200mm length at the cut face shall be removed by machining. Pneumatic hand tools such as edge preparation, tube cutting machine can be used.

□.00.00 CLEANING AND SER□ICING

6.01.00 The inside of all tubes, pipes, valves and fittings shall be free from dirt, and loose scales before being erected. All the pipelines shall be thoroughly blown and/or flushed. Each steam and water tubes shall be blown with compressed air and shall be subjected to 'ball test' before erection to ensure that no obstructions exist. A system for recording of all such operations shall be developed and maintained in a manner to ensure that no obstructions are left inside the tubes and no tubes are left uncleaned and untested.

6.02.00 All valves and valve actuators, and dampers and damper actuators, if any, shall be thoroughly cleaned and serviced prior to pre-commissioning tests and/or Initial Operations of the plant. A system for recording of such servicing operation shall be developed and maintained in a manner acceptable to the Employer and to ensure that no valves or dampers including their actuators are left unserviced.

6.03.00 All interior surfaces of the turbine shall be thoroughly cleaned prior to boxing - up to remove all traces of oil preservations.

□.00.00 FIELD WELDING SCHEDULE

The Contractor shall submit to the Employer, a certified and complete field welding schedule for all the field welding activities to be carried out in respect of the pressure parts involved in the equipment furnished and erected by him, at least 90 days prior to the scheduled start of erection work at site. Such schedule will be strictly followed by the Contractor during the process of erection. The above field-welding schedule to be issued by the Contractor shall contain the following:

(a.) Drawing No (s)

(b.) Location of the weld

(c.) Size of the weld (outside diameter and thickness)

(d.) Type of joints

(e.) Material specifications

(f.) Size of fillet on backing ring, when the type of joint is with backing ring

(g.) Electrode/ filler metal specifications

(h.) Number of welds per unit

(i.) Quantity of filler metal per weld

(j.) Indication of required Non-destructive Examination (NDE) for each weld

(k.) Pre-heat temperatures for welding

(l.) Process of welding

(m.) Post-welding heat treatment temperature ranges, duration, under as specified at clause no 4.00.00 of this chapter entitled "Heat Treatment".

(n.) Qualification details of weld procedures to be adopted as specified at clause no 3.01.00 of this chapter entitled 'Qualification of Weld Procedures'.

□.00.00 SITE RUN MISCELLANEOUS PIPING

Sketches or diagrams of the proposed routings of all piping, not already indicated and routed on the shop drawings which were reviewed by the Employer, shall be submitted to the Employer for review, Employer's acceptance of such site routings shall be obtained before the piping is erected. All these site run piping shall be installed in such a manner as to present an orderly and neat installation. They shall be located as to avoid obstruction of access and passages. Valves, instruments or any other special items shall be located convenient for operation by the operating personnel. Pipe runs shall be plumb or level except where pitch for drainage is required. Pipe runs that are not parallel to the building structure, walls or column rows shall be avoided so that deflection of pipes between hangers does not exceed 6 mm. No miscellaneous pipe shall be routed and installed above or adjacent to electrical equipment.

□.00.00 THERMAL E□PANSIONS

All piping installation shall be such that no excessive or destructive expansion forces exist either in the cold condition or under condition of maximum temperature. All bends, expansion joints and any other special fittings, necessary to provide proper expansion, shall be incorporated. During installation of expansion joints and anchors, care must be taken to make sure that full design movement is available at all times for maximum to minimum temperature and vice-versa.

10.00.00 PIPING SUPPORTS

10.01.00 Hangers, supports and anchors shall be installed as required to obtain a safe, reliable and complete pipe installation. All supports shall be properly levelled and anchored when installed. The anchors shall be so placed that thermal expansion will be absorbed by bends without subjecting the valves or equipment to excessive strains.

10.02.00 The hanger assemblies shall not be used for the attachment of rigging to hoist the pipe into place. Other means shall be used to securely hold the pipe in place till the pipe support is completely assembled and attached to the pipe and building

	structures and spring support is set to accommodate the pipe way. All temporary rigging shall be removed in such a way that the pipe support is not subjected to any sudden load. All piping, having variable spring type supports, shall be held securely in place by temporary means during the hydraulic test of pipe system. Constant support type spring hangers used during hydraulic test shall be pinned or blocked solid during the test. After complete installation and insulation of the piping and filling of the piping with its normal operating medium, the pipe support springs shall be adjusted to the cold positions. If necessary, the spring support shall be re-adjusted to the hot positions after the line has been placed for service at its normal maximum operating temperature conditions. Electric arc welding only shall be used to weld all pipe supports to structural steel members that form part of the building supporting structure. The structural beams shall not be heated more than necessary during welding of supports and such welds shall run parallel to the axis of the span. All lugs or any other attachments welded to the piping shall be of the same material as the pipe.
11.00.00	**PRESSURE TESTING**
11.01.00	On completion of erection of pressure parts, a hydraulic test in accordance with the requirements of the Indian Boiler Regulations shall be performed by the Contractor.
11.02.00	All the valves, high pressure pipes and inter-connected pipes connecting the pressure parts shall be tested along with pressure parts. All blank flanges or any removable plugs required for openings not closed by the valves, and piping provided, shall be furnished by the Contractor. The pressurization equipment including water piping from the supply, needed for the above test shall also be furnished by the Contractor. Any defects noticed during the testing are to be rectified and the unit re-tested. If any welding is done on the pressure parts after the Hydraulic test, the Hydraulic test for that portion of pressure parts shall be repeated. Water as required for such pressure testing shall be provided by the employer.
11.03.00	Thy hydraulic test shall be considered successful only on certification to that effect by the concerned inspecting Authority as per the provisions of the Indian Boiler Regulations and the Employer.
12.00.00	**THERMOWELLS AND FLOW NO□□LES**
12.01.00	All the thermowells and flow nozzles in the equipment furnished under the technical specifications shall be installed as a part of this work.
12.02.00	All thermowell connections incorporated in the steam service shall be plugged during the pressure testing and the blow out of steam piping systems. Upon completion of the blow out operation, all thermowells shall be installed and seam welded. Similarly, all flow nozzles in the steam lines shall also be installed only on completion of steam blowing operations unless otherwise agreed to by the Employer, depending upon the sequence of cleaning and purging operations to be adopted by the Contractor at the field.
13.00.00	**INSULATION□LAGGING AND CLADDING** The provision of insulation, lagging and cladding of the various equipments and portion of the equipment covered under the Contract, shall be furnished by the

Contractor as specified elsewhere or agree to separately in writing. Welds required for holding insulation on pressure parts shall be carried out by IBR qualified welder.

13.01.00 **P□□□□□P□□□ F□□□□□□ □ □□□□□**

All piping insulation and metal cladding furnished with the equipment to be erected shall be applied as specified herein.

13.01.01 **P□□□□**

The insulation on piping shall be applied using wire loops on 150mm centres. These wire loops shall be thoroughly embedded into the outer insulation surface and all cracks, voids and depressions shall be filled with insulating cement suitable for the piping temperature so as to form a smooth base for application of cladding. The wires used for piping insulation shall be of 16 SWG. The surface shall be smooth and uniform before applying the outer covering. All piping insulation ends shall be terminated at a sufficient distance from flanges to facilitate removal of bolts.

13.01.02 **F□□□□□□**

Insulation on flanges shall be by means of blocks of insulating material securely bound to the flange by wire loops. Such blocks of insulation shall be long enough to overlap the adjacent pipe insulation by an amount equal to the thickness of adjacent pipe insulation. Smooth finish shall be obtained by the application of insulating cement. Alternatively, sectional pipe insulation of proper diameter may be used. Insulation on flanges shall not be done until the pipe and equipment have been in service during the initial operation and till all the flange bolts have been retightened.

13.01.03 **B□□d□ □□d E□□□□**

Insulation on bends and elbows shall be cut into sections sufficiently short to form a reasonable smooth external surface. After the application of insulation material in place, it shall be smoothly coated with insulating cement. Elbows may be insulated as above or alternatively by means of specially moulded insulation enclosures.

13.01.04 **C□□dd□□**

Cladding shall be of aluminium sheet of thickness as per details given in detail Technical Specification or will be provided during detail engineering shall be machine rolled and formed to accurately fit insulation curvatures. Cladding shall be secured using self-tapping screws. Screws shall be adequate number and so located as to produce tight joints. The spacing of screws shall be as far as possible uniform and on centres not exceeding 150 mm. For outside diameters less than 230 mm, spacing of screws shall be on centres not exceeding 100 mm. adequate number of screws shall be provided for fixing the cladding and be so placed in such locations, as to produce a smooth cladding finish without bellying'. Insulated elbows having insulated diameters less than 330 mm shall be provided with preformed smooth aluminium elbow jackets. Wherever possible, all joints should be lapped a minimum of 50 mm with joints facing downwards and so placed that they are obscured from normal points of vision. All the joints in the cladding shall be made with suitable provisions for expansions. All butt joints such as those at piping tees

shall be made using rolled seams. In addition, to prevent galvanic corrosion, suitable action, as specified at clause no 13.02.00 of this chapter, shall be taken.

13.01.05 □□□□□□ □□**d F**□□□□□□□

All valves and fittings (above valve size of 2 inches) installed in the steam pipelines shall also be applied with insulation and furnished with suitably shaped boxes so as to facilitate easy dismantling of the fittings. The insulation thickness for valves, valve fittings etc., shall be same as that used on the line on which they are installed. All voids shall be properly filled up with insulating material and as per the directions of the Employer.

13.02.00 **Pr**□□□□□□□□ □□**E**□□□□□ □□□**d**□**r**□□□ **l**□□□□□□□□ **A**□□□□□□□□□

All equipment and structures shall be suitably protected from damage while applying insulation after completion of insulation. All equipment and structures shall be thoroughly cleaned and remove insulating materials which might have fallen on them.

14.00.00 CODE REQUIREMENTS

The erection requirements and procedures to be followed during the installation of the equipment shall be in accordance with the relevant Indian Electricity Rules & Codes, Indian Boiler Regulations, ASME codes and accepted good practices, the Employer's Drawings and other applicable Indian recognised codes and laws and regulations of the Government of India.

1□.00.00 ELECTRICAL SAFETY REGULATIONS

15.01.00 In no circumstances will the Contractor interfere with fuses and electrical equipment belonging to the other Contractor or Employer.

15.02.00 Before the Contractor connects any electrical appliances to any plug or socket belonging to the other Contractor or Employer, he shall:

(a) Satisfy the Employer that the appliance is in good working condition.

(b) Inform the Employer of the maximum current rating,voltage and phase of the appliances.

(c) Obtain permission of the Employer detailing the socket to which the appliances may be connected.

The Employer will not grant permission to connect unitl he is satisfied that

(d) The appliance is in good condition and is fitted with suitable plug.

(e) The appliance is fitted with a suitable cable having two earth conductors, one of which shall be an earthened metal sheath surrounding the cores.

15.03.00	No electric cable in use by the other Contractor/Employer will be disturbed without permission. No weight of any description will be imposed on any such cable and ladder or similar equipment will rest against or to be attached with it.
15.04.00	No reapir work shall be carried out on any live equipment. The equipment must be declared safe by the Employer and a permit to work issued before any work is carried out.
15.05.00	The Contractor shall employ the necessary number of qualified, full time electricians to maintain his temporary electrical installation.
1□.00.00	**REMO□AL OF MATERIAL**
	No material brought to the Site shall be removed from the Site by the Contractor and/or his Sub-Contractors without the prior written approval of the Employer.
1□.00.00	**INSPECTION□TESTING AND INSPECTION CERTIFICATES**
	The provisions of the clause entitled Inspection, Testing and Inspection Certificates given in Part - C of the Technical Specification, shall also be applicable to the erection portion of the Works. The Employer shall have the right to re-inspect any equipment though previously inspected and approved by him at the Contractor's works, before and after the same are erected at Site. If by the above inspection, the Employer rejects any equipment, the Contractor shall make good for such rejections either by replacement or modification/ repairs as may be necessary to the satisfaction of the Employer. Such replacements will also include the replacements or re-execution of such of those works of other Contractors and/or agencies, which might have got damaged or affected by the replacements or re-work done to the Contractor's work.
1□.00.00	**ACCESS TO SITE AND WORKS ON SITE**
18.01.00	Suitable access to site and permission to work at the Site shall be accorded to the Contractor by the Employer in reasonable time.
18.02.00	In the execution of the Works, no person other than the Contractor or his duly appointed representative, Sub-Contractor and workmen, shall be allowed to do work on the Site, except by the special permission, in writing by the Employer or his representative.
1□.00.00	**CONTRACTOR□S SITE OFFICE ESTABLISHMENT**
	The Contractor shall establish a Office at the Site and keep posted an authorised representative for the purpose of the Contract. Any written order or instruction of the Employer or his duly authorised representative, shall be communicated to the said authorised resident representative of the Contractor and the same shall be deemed to have been communicated to the Contractor at his legal address.

20.00.00	**CO-OPERATION WITH OTHER CONTRACTORS**
20.01.00	Employer, who may be performing other works on behalf of the Employer and the workmen who may be employed by the Employer and doing work in the vicinity of the works under the Contract. The Contractor shall also arrange to perform his work as to minimise, to the maximum extent possible, interference with the work of other Contracts and their workmen. Any injury or damage that may be sustained by the employees of the other Contractors and the Employer, due to the Contractor's work shall promptly be made good at his own expense. The Employer shall determine the resolution of any difference or conflict that may arise between the Contractor and other Contractors or between the Contractor and the workmen of the Employer in regard to their work. If the work of the Contractor is delayed because of the any acts of omission of another Contractor, the Contractor shall have no claim against the Employer on that account other than an extension of time for completing his works. Employer shall have full access to visit the contractor's site at any time for inspection and surveillance checks.
20.02.00	The Employer shall be notified promptly by the Contractor of any defects in the other Contractor's works that could affect the Contractor's Works. The Employer shall determine the corrective measures if any, required to rectify this situation after inspection of the works and such decisions by the Employer shall be binding on the Contractor.
21.00.00	**DISCIPLINE OF WORKMEN**
	The Contractor shall adhere to the disciplinary procedure set by the Employer in respect of his employees and workmen at Site. The Employer shall be at liberty to object to the presence of any representative or employee of the Contractor at the Site, if in the opinion of the Employer such employee has misconducted himself or is incompetent, negligent or otherwise undesirable then the Contractor shall remove such a person objected to and provide in his place a competent replacement.
22.00.00	**CONTRACTOR□S FIELD OPERATION**
22.01.00	The Contractor shall keep the Employer informed in advance regarding his field activity plans and schedules for carrying out each part of the works. Any review of such plan or schedule or method of work by the Employer shall not relieve the Contractor of any of his responsibilities towards the field activities. Such reviews shall also not be considered as an assumption of any risk or liability by the Employer or any of his representatives and no claim of the Contractor will be entertained because of the failure or inefficiency of any such plan or schedule or method of work reviewed. The Contractor shall be solely responsible for the safety, adequacy and efficiency of plant and equipment and his erection methods.
22.02.00	The Contractor shall have the complete responsibility for the conditions of the Work-Site including the safety of all persons employed by him or his Sub-Contractor and all the properties under his custody during the performance of the work. This requirement shall apply continuously till the completion of the Contract and shall not be limited to normal working hours. The construction review by the Employer is not intended to include review of Contractor's safety measures in, on or near the Work-Site, and their adequacy or otherwise.

2□.00.00	**PHOTOGRAPHS AND PROGRESS REPORT**
23.01.00	The Contractor shall furnish three (3) prints each to the Employer of progress photographs of the work done at Site. Photographs shall be taken as and when indicated by the Employer or his representative. Photographs shall be adequate in size and number to indicate various stages of erection. Each photograph shall contain the date, the name of the Contractor and the title of the photograph.
23.02.00	The above photographs shall accompany the monthly progress report detailing out the progress achieved on all erection activities as compared to the schedules. The report shall also indicate the reasons for the variance between the scheduled and actual progress and the action proposed for corrective measures, wherever necessary.
23.03.00	The Contractor shall submit the progress of work in soft and hard form (as decided by employer) quarterly highlighting the progress and constraints at site.
24.00.00	**MAN-POWER REPORT**
24.01.00	The Contractor shall submit to the Employer, on the first day of every month, a man hour schedule for the month, detailing the man hours scheduled for the month, skill-wise and area-wise.
24.02.00	The Contractor shall also submit to the Employer on the first day of every month, a man power report of the previous month detailing the number of persons scheduled to have been employed and actually employed, skill- wise and the areas of employment of such labour.
25.00.00	**PROTECTION OF WORK**
	The Contractor shall have total responsibility for protecting his works till it is finally taken over by the Employer. No claim will be entertained by the Employer or the representative of the Employer for any damage or loss to the Contractor's works and the Contractor shall be responsible for complete restoration of the damaged works to original conditions to comply with the specification and drawings. Should any such damage to the Contractor's Works occur because of other party not being under his supervision or control, the Contractor shall make his claim directly with the party concerned. If disagreement or conflict or dispute develops between the Contractor and the other party or parties concerned regarding the responsibility for damage to the Contractor's Works the same shall be resolved as per the provisions of the as specified at clause no 21.00.00 of this chapter entitled "Co-operation with other Contractors." The Contractor shall not cause any delay in the repair of such damaged Works because of any delay in the resolution of such disputes. The Contractor shall proceed to repair the Work immediately and no cause thereof will be assigned pending resolution of such disputes.
26.00.00	**EMPLOYMENT OF LABOUR**
26.01.00	In addition to all local laws and regulations pertaining to the employment of labour to be complied with by the Contractor pursuant to GCC, the Contractor will be expected to employ on the work only his regular skilled employees with experience of the

	particular work. No female labour shall be employed after darkness. No person below the age of eighteen years shall be employed.
26.02.00	All travelling expenses including provisions of all necessary transport to and from Site, lodging allowances and other payments to the Contractor's employees shall be the sole responsibility of the Contractor.
26.03.00	The hours of work on the Site shall be decided by the Employer and the Contractor shall adhere to it. Working hours will normally be eight (8) hours per day - Monday through Saturday.
26.04.00	Contractor's employees shall wear identification badges while on work at Site.
26.05.00	In case the Employer becomes liable to pay any wages or dues to the labour or any Government agency under any of the provisions of the Minimum Wages Act, Workmen Compensation Act, Contact Labour Regulation Abolition Act or any other law due to act of omission of the Contractor, the Employer may make such payments and shall recover the same from the Contractor's Bills.
2□.00.00	**FACILITIES TO BE PRO□IDED BY THE EMPLOYER**
27.01.00	**E□□□r□□□□**
	Refer to construction power, as envisaged at Clause 1.12.00 of Sub Section-III-B, Part A, Sec VI of Technical specification.
27.02.00	**W□□r**
	Contractor shall make all arrangements himself for the supply of construction water as well as potable water for labour and other personnel at the worksite/colony. However, drawl of construction/potable water from bore-well shall be permitted if found suitable. Any statutory clearance required shall be obtained by the contractor. Assistance, if required shall be provided by the owner.
27.03.00	**C□□ □ □□□□□□**
	The Employer will extend the telephone facilities, if available at Site, for purposes of Contract. The Contractor shall be charged at actuals for such facilities.
27.04.00	**R□□□ □□ S□d□** Railway siding shall be provided by owner (up to plant entry point) for coal transportation to site. However the same may not be available to the bidder for material/supplies transport etc. Bidder has to plan its own arrangement for movement of ODC consignment to plant site.
2□.00.00	**FACILITIES TO BE PRO□IDED BY THE CONTRACTOR**
28.01.00	**C□□r□□□r□ □□□ □□□□ E□□□□□□□ □□□**
	The Contractor shall establish a site office at the site and keep posted an authorized representative for the purpose of the contract, pursuant to GCC. The site office will

include one conference meeting room for site meetings between the Contractor and the Employer.

28.02.00 **T□□□□□□□□□□□□ □□d □□□□□□d□□□**

The Contractor shall provide all the construction equipments, tools, tackles and scaffoldings required for pre-assembly, installation, testing, commissioning and conducting Guarantee tests of the equipments covered under the Contract. He shall submit a list of all such materials to the Employer before the commencement of pre-assembly at Site. These tools and tackles shall not be removed from the Site without the written permission of the Employer. The Contractor shall arrange Dozer, Hydra, Cranes, Trailer, etc. for the purpose of fabrication, erection and commissioning.

28.03.00 **T□□□□□ E□□□□ □□□□d F□□□□□□□:**

The contractor shall provide the necessary testing, equipment and facilities.

28.04.00 **S□□ □□□r□□□r□ □r □□□□□□ □r□:**

Contractor shall provide and maintain a site laboratory for the testing of construction material under the direction and general supervision of employer.

28.05.00 **F□r□□-□d**

28.05.01 The Contractor shall provide necessary first-aid facilities for all his employees, representatives and workmen working at the Site. Enough number of Contractor's personnel shall be trained in administering first-aid.

28.05.02 The Employer will provide the Contractor, in case of any emergency, the services of an ambulance for transportation to the nearest hospital.

28.06.00 **C□□□□□□□□□**

28.06.01 The Contractor shall be responsible for keeping the entire area allotted to him clean and free from rubbish, debris etc. during the period of Contract. The Contractor shall employ enough number of special personnel to thoroughly clean his work-area at least once in a day. All such rubbish and scrap material shall be stacked or disposed in a place to be identified by the Employer. Materials and stores shall be so arranged to permit easy cleaning of the area. In areas where equipment might drip oil and cause damage to the floor surface, a suitable protective cover of a flame resistant, oil proof sheet shall be provided to protect the floor from such damage.

28.06.02 Similarly the offices shall be kept clean and neat to the entire satisfaction of the Employer. Proper sanitary arrangements shall be provided by the Contractor, in the work-areas and office areas of the Contractor.

2□.00.00 LINES AND GRADES

All the Works shall be performed to the lines, grades and elevations indicated on the drawings. The Contractor shall be responsible to locate and layout the Works. Basic horizontal and vertical control points will be established and marked by the Employer at Site at suitable points. These points shall be used as datum for the

works under the Contract. The Contractor shall inform the Employer well in advance of the times and places at which he wishes to do work in the area allotted to him so that suitable datum points may be established and checked by the Employer to enable the Contractor to proceed with his works. Any work done without being properly located may be removed and/or dismantled by the Employer at Contractor's expense.

□0.00.00 FIRE PROTECTION

30.01.00 The work procedures that are to be used during the erection shall be those which minimise fire hazards to the extent practicable. Combustible materials, combustible waste and rubbish shall be collected and removed from the Site at least once each day. Fuels, oils and volatile or flammable materials shall be stored away from the construction and equipment and materials storage areas in safe containers. Untreated canvas, paper, plastic or other flammable flexible materials shall not at all be used at Site for any other purpose unless otherwise specified. If any such materials are received with the equipment at the Site, the same shall be removed and replaced with acceptable material before moving into the construction or storage area.

30.02.00 Similarly corrugated paper fabricated cartons etc. will not be permitted in the construction area either for storage or for handling of materials. All such materials used shall be of water proof and flame resistant type. All the other materials such as working drawings, plans etc. which are combustible but are essential for the works to be executed shall be protected against combustion resulting from welding sparks, cutting flames and other similar fire sources.

30.03.00 All the Contractor's supervisory personnel and sufficient number of workers shall be trained for fire-fighting and shall be assigned specific fire protection duties. Enough of such trained personnel must be available at the Site during the entire period of the Contract.

30.04.00 The Contractor shall provide enough fire protection equipment of the types and number for the warehouses, office, temporary structures, labour colony area etc. Access to such fire protection equipment, shall be easy and kept open at all time.

□1.00.00 SECURITY

The Contractor shall have total responsibility for all equipment and materials in his custody stores, loose, semi-assembled and/or erected by him at Site. The Contractor shall make suitable security arrangements including employment of security personnel to ensure the protection of all materials, equipment and works from theft, fire, pilferage and any other damages and loss. All materials of the Contractor shall enter and leave the Employer Site only with the written permission of the Employer in the prescribed manner.

32.00.00 **CONTRACTOR□S AREA LIMITS**

The Employer will mark-out the boundary limits of access roads, parking spaces, storage and construction areas for the Contractor and the Contractor shall not trespass the areas not so marked out for him. The Contractor shall be responsible to

ensure that none of his personnel move out of the areas marked out for his operations. In case of such a need for the Contactor's personnel to work out of the areas marked out for him the same shall be done only with the written permission of the Employer.

33.00.00 **CONTRACTOR□S CO-OPERATION WITH THE EMPLOYER**

In case where the performance of the erection work by the Contractor affects the operation of the system facilities of the Employer, such erection work of the Contractor shall be scheduled to be performed only in the manner stipulated by the Employer and the same shall be acceptable at all times to the Contractor. The Employer may impose such restrictions on the facilities provided to the Contractor such as electricity, etc. as he may think fit in the interest of the Employer and the Contractor shall strictly adhere to such restrictions and co-operate with the Employer. It will be the responsibility of the Contractor to provide all necessary temporary instrumentation and other measuring devices required during start-up and operation of the equipment systems which are erected by him. The Contractor shall also be responsible for flushing and initial filling of all the oil and lubricants required for the equipment furnished and installed by him, so as to make such equipment ready for operation. The Contractor shall be responsible for supplying such flushing oil and other lubricants unless otherwise specified elsewhere in documents and specifications.

34.00.00 **PRE-COMMISSIONING AND COMMISSIONING ACTI□ITIES**

34.01.00 **GENERAL**

34.01.01 The Contractor upon completion of installation of equipments and systems, shall conduct pre-commissioning and commissioning activities, to make the equipment/systems ready for safe, reliable and efficient operation on sustained basis. All pre-commissioning/commissioning activities considered essential for such readiness of the equipment/systems including those mutually agreed and included in the Contractor's quality assurance programme as well as those indicated in clauses elsewhere in the technical specifications shall be performed by the contractor.

34.01.02 The pre-commissioning and commissioning activities including Guarantee/ demonstration/ acceptability tests, checks and trial operations of the equipment/systems furnished and installed by the contractor shall be the responsibility of the Contractor as detailed in relevant clauses in Technical Specification. The Contractor shall provide, in addition, test instruments, calibrating devices etc. and labour required for successful performance of these operations. If it is anticipated that the above test may prolong for a long time, the Contractor's workmen required for the above test shall always be present at site during such operations.

34.01.03 The following activities shall be carried out by the contractor, 18 month prior to schedule date of commissioning of the equipment/systems installed by him.

(a.) The contractor shall furnish the organization chart of his operation and commissioning engineers for the acceptance of employer. Adequate number of operation and commissioning engineers shall be deployed by the

contractor to effectively meet the requirement of round the clock operation in shifts also, till the plant is taken over by the employer.

(b.) The contractor shall submit the bio-data containing the details of experience of his operation and commissioning engineers for the acceptance of employer.

(c.) The contractor shall furnish the deployment schedule of his operation and commissioning engineers for the acceptance of the employer.

(d.) Apart from above, contractor shall ensure deployment of sufficient skilled/semi-skilled/unskilled manpower during pre-commissioning and commissioning activities.

34.01.04 It shall be the responsibility of the Contractor to provide all necessary temporary instrumentation and other measuring devices required during start-up and initial operation of the equipment/systems which are installed by him.

34.01.05 The Contractor shall also be responsible for flushing and initial filling of all oils and lubricants required for the equipment furnished and installed by him so as to make such equipment ready for operation. The Contractor shall be responsible for supplying such flushing oil and other lubricants unless otherwise specified elsewhere in these specifications and documents.

34.02.00 **COMMISSIONING DOCUMENTATION**

34.02.01 The contractor shall submit the commissioning documentation, comprising of Standard checklists, pre-commissioning procedures, testing schedules, commissioning schedules and commissioning networks for various equipment/systems covered under the contract, for the approval of employer.

34.02.02 Standard checklist, as the name suggests, shall be a fairly general documents, containing the list of all checks required to be carried out for similar and repetitive type of equipment to ensure consistent and thorough checking. An indicative list of such equipment is enclosed as Annexure I.

34.02.03 The testing schedule is a document, designed for safe and systematic commissioning of individual equipment/sub-system (for example compressor etc.) Commissioning schedule is a document envisaged for commissioning of a system (for example Compressed Air system, Unit commissioning etc.). The testing/Commissioning schedule shall have a standard format in order to maintain consistency of presentation, content and reporting. A brief write up on the contents of the Testing Schedule/Commissioning Schedule is enclosed as Annexure-II.

34.02.04 The contractor shall submit the list of commissioning documentation to be submitted by him, along with their submission schedule for various equipment/systems covered under the contract, with in 6(six) month from the date of award of contract, for the acceptance of employer.

34.02.05	The Contractor shall submit the commissioning documentation, for various equipment/covered under the contract, for the approval of employer, at least 18 months before the scheduled date of commissioning of the equipment/systems.
34.03.00	**COMMISSIONING ACTI□ITIES**
34.03.01	Upon completion of pre-commissioning activities/tests, the contractor shall initiate commissioning of facilities. During commissioning the Contractor shall carry out system checking and reliability trials on various parts of the facilities.
34.03.02	Contractor shall carry out the checks/tests at site to prove to the Employer that each equipment of the supply complies with requirements stipulated and is installed in accordance with requirements specified.
34.03.03	Before the plant is put into initial operation the Contractor shall be required to conduct test to demonstrate to the Employer that each item of the plant is capable of correctly performing the functions for which it was specified and its performance, parameters etc. are as per the specified/approved values. These tests may be conducted concurrently with those required under commissioning sequence.
34.03.04	The Contractor shall also demonstrate the performance of all C&I equipment, the tests on main equipment of prior to that as the case may be.
34.03.05	Other tests shall be conducted, if required by the Employer, to establish that the plant equipment are in accordance with requirements of the specifications.
34.03.06	The Contractor shall conduct all the commissioning tests and undertake commissioning activities pertaining to all other auxiliaries and equipments including all electrical and C&I equipment/systems not specifically brought out above but are within the scope of work and facilities being supplied and installed by the Contractor and follow the guidelines indicated above or elsewhere in these technical specifications.
34.05.00	**I□□□□□O□□r□□□□**
	Upon completion of system checking/Tests as above and as a part of commissioning of facilities, complete plant/facilities shall be put on initial operation as stipulated in General Technical Requirements.
□□.00.00	**MATERIALS HANDLING AND STORAGE**
35.01.00	All the equipments furnished under the Contract and arriving at Site shall be promptly received, unloaded and transported and stored in the storage spaces by the Contractor.
35.02.00	Contractor shall be responsible for examining all the shipment and notify the Employer immediately of any damage, shortage, discrepancy etc. for the purpose of Employer's information only. The Contractor shall submit to the Employer every week a report detailing all the receipts during the week. However, the Contractor shall be solely responsible for any shortages or damage in transit, handling and / or

	in storage and erection of the equipment at Site. Any demurrage, wharfage and other such charges claimed by the transporters, railways etc. shall be to the account of the Contractor.
35.03.00	The Contractor shall maintain an accurate and exhaustive record detailing out the list of all equipment received by him for the purpose of erection and keep such record open for the inspection of the Employer.
35.04.00	All equipment shall be handled very carefully to prevent any damage or loss. No bare wire ropes, slings, etc. shall be used for unloading and/or handling of the equipment without the specific written permission of the Employer. The equipment stored shall be properly protected to prevent damage either to the equipment or to the floor where they are stored. The equipment from the store shall be moved to the actual location at the appropriate time so as to avoid damage of such equipment at Site.
35.05.00	All electrical panels, controls gear, motors and such other devices shall be properly dried by heating before they are installed and energised. Motor bearings, slip rings, commutators and other exposed parts shall be protected against moisture ingress and corrosion during storage and periodically inspected. Heavy rotating parts in assembled conditions shall be periodically rotated to prevent corrosion due to prolonged storage.
35.06.00	All the electrical equipment such as motors, etc. shall be tested for insulation resistance at least once in three months from the date of receipt till the date of commissioning and a record of such measured insulation values maintained by the Contractor. Such records shall be open for inspection by the Employer.
35.07.00	The Contractor shall ensure that all the packing materials and protection devices used for the various equipments during transit and storage are removed before the equipment are installed.
35.08.00	The consumables and other supplies likely to deteriorate due to storage must be thoroughly protected and stored in a suitable manner to prevent damage or deterioration in quality by storage.
35.09.00	All the materials stored in the open or dusty location must be covered with suitable weatherproof and flame-proof covering material wherever applicable.
35.10.00	If the materials belonging to the Contractor are stored in areas other than those earmarked for him, the Employer will have the right to get it moved to the area earmarked for the Contractor at the Contractor's cost.
35.11.00	The Contractor shall be responsible for making suitable indoor storage facilities to store all equipment which require indoor storage. Normally, all the electrical equipments such as motors, control gear, generators, exciters and consumables like electrodes, lubricants etc. shall be stored in the closed storage space. The Employer, in addition, may direct the Contractor to move certain other materials, which in his opinion will require indoor storage, to indoor storage areas which the Contractor shall strictly comply with.

□□.00.00	**CONSTRUCTION MANAGEMENT**
36.01.00	The field activities of the Contractors working at Site, will be coordinated by the Employer and the Employer decision shall be final in resolving any disputes or conflicts between the Contractor and other Contractors and tradesmen of the Employer regarding scheduling and co- ordination of work. Such decision by the Employer shall not be a cause for extra compensation or extension of time for the Contractor.
36.02.00	The Employer shall hold weekly meetings of all the Contractors working at Site, at a time and place to be designated by the Employer. The Contractor shall attend such meetings and take notes of discussions during the meeting and the decisions of the Employer and shall strictly adhere to those decisions in performing his Works. In addition to the above weekly meeting, the Employer may call for other meeting either with individual Contractors or with selected number of Contractors and in such a case the Contractor if called, will also attend such meetings.
36.03.00	Time is the essence of the Contract and the Contractor shall be responsible for performance of his works in accordance with the specified construction schedule. If at any time, the Contractor is falling behind the schedule, he shall take necessary action to make good for such delays by increasing his work force or by working overtime or otherwise accelerate the progress of the work to comply with the schedule and shall communicate such actions in writing to the Employer, satisfying that his action will compensate for the delay. The Contractor shall not be allowed any extra compensation for such action.
36.04.00	The Employer shall however not be responsible for provision of additional labour and/or materials or supply or any other services to the Contractor except for the co-ordination work between various Contractors as set out earlier.
36.05.00	**S□□ □ □□□□□ □□□d□r□□ □□□□r□□□□ □□□□ □□□□□d□□ □□r □□□□□□**
	Bidder shall ensure that the plant site within the plant boundary is managed in a coordinated and professional way all through the construction phase till handing over of plant, ensuring safe, easy & unhindered working conditions and a healthy & hygienic working environment at site. He shall ensure the following measures at site while executing the project.
□)	Proper housekeeping by systematic and proper disposal of earth from excavations (separately for usable & surplus earth), muck (from pile bores or otherwise), wastes (from dismantling of pile tops, concrete works etc), packing & insulation wastes, steel scrap, cable wastes etc generated during construction / erection works. Suitable disposal sites for each of above shall be identified in the layout and at site in the beginning of the project itself. It shall be ensured that all agencies engaged by the bidder follow the discipline to dispose off of earth spoils and wastes at the designated places. Preferably once in a week suitable time slot will be identified for housekeeping by all agencies and suitable instructions shall be issued in this regard. Bidder may engage a separate agency or identify a gang for collection of wastes and disposal to designated places. Suitable arrangement / tieup will also be made for periodic disposal of wastes/ scrap from the designated places.

□) All fabrication areas shall be suitably hard crusted to provide a water free and proper working platforms. Suitable sheds preferably pre engineered structures to be provided for paint shops, fabrication workshops etc for ensuring all weather work conditions for onsite structural works. For the main plant and auxiliary buildings, bidder should preferably plan the works in such a way that structural fabrication is done in suppliers' offsite works / workshops and onsite fabrication works are avoided / kept minimum.

□) Suitable onsite maintenance workshop for day to day breakdown maintenance heavy plant and equipment like batching plants, cranes, earth moving equipment, poclains, welding equipment etc. The workshop shall have stock of frequently needed spares and suitable repair facilities with experienced technicians/mechanics. A central test laboratory equipped with test equipment for routine tests like tests on soil, concrete, bricks, aggregates, welds etc with experienced staff shall be established at the start of the project itself.

d) All office and covered store buildings of the bidder and its agencies shall be of prefab/ pre-engineered / porta cabin construction. Shabby semi finished constructions in brickwork/ GI / asbestos roof etc shall not be permitted.

□) First aid facilities and amenities like rest rooms, suitable pre engineered toilets (separate for men and women), drinking water fountains/tanks, canteen, crèche for women workers shall be planned and established at the beginning of the project itself. These facilities shall be located distributed over the plant area to enable easy access by the construction workers and staff and shall be marked on the plant layout. Suitable treatment for toilet discharge, like bio digesters etc shall be planned and conventional septic tanks / soak pits etc shall be avoided.

□) Proper lighting of all construction / erection areas. Bidder shall erect adequate number of high lighting masts in FGD area, office and store areas for lighting during night. DG sets of adequate capacity shall be provided for emergency backup. The street lighting along the roads shall also be prioritized along with road construction.

□) Well planned and coordinated storage and movement of plant, equipment and construction materials. System wise / agency wise storage / laydown areas shall be planned and marked on the plant layout at the beginning itself. Bidder shall ensure that all its agencies comply to the areas allocated to them and follow the designated storage and movement plans. Adequate covered storage shall be constructed for storage of critical equipments like switchgears, MCCs, insulation etc.

□) Proper access control for construction workers, staff and visitors. Bidder shall ensure that suitable electronic based gate pass system is in place from start of project itself to keep record and track of all workers, staff and visitors entering/exiting the plant premises shift wise on daily basis.

□) Compliance to all safety requirements as specified elsewhere in the tender documents. Bidders shall establish a safety centre at the start of the project itself. It shall have a 24X7 manned safety control room in addition to a permanent safety equipment display room, separate training / lecture hall with AV facilities for safety training, store room with adequate stock of specified safety equipment, a first aid

room and other amenities. Bidder shall install CCTV cameras at all strategic locations in the plant area which shall be linked to the safety control room.

) Compliance to all environment and other conditions stipulated by the concerned statutory authorities while according clearance / NOC to the project. Bidder shall ensure adequate sprinkling of water by deploying water tankers to prevent the fugitive dust nuisance during construction.

) Development of suitable landscape & green belt areas and rainwater harvesting within the plant premises. Bidder shall plan to develop the landscape & green belt areas and rainwater harvesting from the start of the project itself. The landscape and rainwater harvesting plan shall be finalized immediately after award of work and suitable work plan with priority and schedule shall also be finalized thereafter. Top soil before excavation shall be suitably preserved and stacked for landscape and green belt development.

) Provision of adequate shelters, water supply, sanitation and lighting in construction workers and staff camps. No camps for workers and staff shall be permitted within the plant premises and Bidder shall make separate arrangement outside the plant premises for locating and development of camps for construction workers and staff. The designated areas shall be suitably developed with infrastructure like roads, drains, water supply and sewerage and shall be free from water logging. Suitable low cost shelters will be provided for the workers. Complete area shall be secured by fencing and shall be provided adequate area lighting. Suitable waste disposal, shopping and recreation facilities will be developed in these camps.

Contractor shall ensure that due importance is given to site management as discussed above and a detailed work plan considering the above aspects is finalized immediately after the award. A senior level executive shall be identified who shall be responsible for implementation of the work plan. Suitable format for progress reporting on site management plan shall be developed and made part of the project progress report. The progress on implementation of above work plan shall be reviewed along with project progress in the monthly project review meetings with owner. In case the progress on site management plan is unsatisfactory, Engineer-in Charge may withhold upto 1% of the monthly running bill (for civil and site erection works) till such time the required progress is demonstrated. Incase in the opinion of Engineer-in-charge, bidder's actions on site management aspects is not adequate, Engineer-in- charge may get the relevant work executed through a separate agency and deduct the expenses incurred from Bidder's bill along with overheads @10 %.

.00.00 FIELD OFFICE RECORDS

The Contractor shall maintain at his Site Office up-to- date copies of all drawings, specifications and other Contract Documents and any other supplementary data complete with all the latest revisions thereto. The Contractor shall also maintain in addition the continuous record of all changes to the above Contract Documents, drawings, specifications, supplementary data, etc. effected at the field and on completion of his total assignment under the Contract shall incorporate all such changes on the drawings and other Engineering data to indicate as installed conditions of the equipment furnished and erected under the Contract. Such

drawings and Engineering data shall be submitted to the Employer in required number of copies.

□□.00.00 CONTRACTOR□S MATERIALS BROUGHT ON TO SITE

38.01.00 The Contractor shall bring to Site all equipment, components, parts, materials, including construction equipment, tools and tackles for the purpose of the Works under intimation to the Employer. All such goods shall, from the time of their being brought vest in the Employer, but may be used for the purpose of the Works only and shall not on any account be removed or taken away by the Contractor without the written permission of the Employer. The Contractor shall nevertheless be solely liable and responsible for any loss or destruction thereof and damage thereto.

38.02.00 The Employer shall have a lien on such goods for any sum or sums which may at any time be due or owing to him by the Contractor, under, in respect of or by reasons of the Contract. After giving a fifteen (15) days notice in writing of his intention to do so, the Employer shall be at liberty to sell and dispose off any such goods, in such manner as he shall think fit including public auction or private treaty and to apply the proceeds in or towards the satisfaction of such sum or sums due as aforesaid.

38.03.00 After the completion of the Works, the Contractor shall remove from the Site under the direction of the Employer the materials such as construction equipment, erection tools and tackles, scaffolding etc. with the written permission of the Employer. If the Contractor fails to remove such materials, within fifteen (15) days of issue of a notice by the Employer to do so then the Employer shall have the liberty to dispose off such materials as detailed under as specified at clause no 39.02.00 of this chapter and credit the proceeds thereto to the account of the Contractor.

□□.00.00 PROTECTION OF PROPERTY AND CONTRACTOR□S LIABILITY

39.01.00 The Contractor shall be responsible for any damage resulting from his operations. He shall also be responsible for protection of all persons including members of public and employees of the Employer and the employees of other Contractors and Sub- Contractors and all public and private property including structures, building, other plants and equipments and utilities either above or below the ground.

39.02.00 The Contractor will ensure provision of necessary safety equipment such as barriers, sign - boards, warning lights and alarms, etc. to provide adequate protection to persons and property. The Contractor shall be responsible to give reasonable notice to the Employer and the Employers of public or private property and utilities when such property and utilities are likely to get damaged or injured during the performance of his Works and shall make all necessary arrangements with such Employers, related to removal and/or replacement or protection of such property and utilities.

40.00.00 **PAINTING**

For painting refer Part-A, sub section-III, Section VI of Technical specification.

Painting for structures shall conform to the painting specification specified in Part-B under Civil.

Painting for Electrical equipments/systems shall conform to the painting specification given in Electrical portion of Part-A and Part-B of technical specifications.

41.00.00 **INSURANCE**

41.01.00 In addition to the conditions covered under the Clause entitled "Insurance" in Section General Conditions of Contract (GCC), the following provisions will also apply to the portion of works to be done beyond the Contractor's own or his Sub-Contractor's manufacturing Works.

41.02.00 **W□r□□ □□□□ C□□ □□□□□□□□□ I□□□r□□□□**

This insurance shall protect the Contractor against all claims applicable under the Workmen's Compensation Act, 1948 (Government of India). This policy shall also cover the Contractor against claims for injury, disability disease or death of his or his Sub-Contractor's employees, which for any reason are not covered under the Workmen's Compensation Act, 1948. The liabilities shall not be less than the following:

Workmen's Compensation	-	As per Statutory Provisions
Employee's Liability	-	As per Statutory Provisions

41.03.00 **C□□ □r□□□□□□□□ A□□□□ □□□□ I□□□r□□□□**

This insurance shall be in such a form to protect the Contractor against all claims for injuries, disability, disease and death to members of public including the Employer's men and damage to the property of other arising from the use of motor vehicles during on or off the Site operations, irrespective of the Ownership of such vehicles. The liability covered shall be as herein indicated :

Fatal Injury	:	Rs.100,000 each person
	:	Rs.200,000 each occurrence
Property Damage	:	Rs.100,000 each occurrence

41.04.00 **C□□ □r□□□□□□□□ G□□□r□□L□□□□□□□□ I□□□r□□□□**

41.04.01 The insurance shall protect the Contractor against all claims arising from injuries, disabilities, disease or death of members of public or damage to property of others, due to any act or omission on the part of the Contractor, his agents, his employees, his representatives and Sub-Contractors or from riots, strikes and civil commotion.

This insurance shall also cover all the liabilities of the Contractor arising out of the Clause entitled "Defence of Suits" in Section General Conditions of Contract (GCC).

41.04.02 The hazards to be covered will pertain to all the Works and areas where the Contractor, his Sub-Contractors, his agents and his employees have to perform work pursuant to the Contract.

41.05.00 The above are only illustrative list of insurance covers normally required and it will be the responsibility of the Contractor to maintain all necessary insurance coverage to the extent both in time and amount to take care of all his liabilities either direct or indirect, in pursuance of the Contract.

42.00.00 UNFA□OURABLE WORKING CONDITIONS

The Contractor shall confine all his field operations to those works which can be performed without subjecting the equipment and materials to adverse effects during inclement weather conditions, like monsoon, storms, etc. and during other unfavourable construction conditions. No field activities shall be performed by the Contractor under conditions which might adversely affect the quality and efficiency thereof, unless special precautions or measures are taken by the Contractor in a proper and satisfactory manner in the performance of such Works and with the concurrence of the Employer. Such unfavourable construction conditions will in no way relieve the Contractor of his responsibility to perform the Works as per the schedule.

4□.00.00 PROTECTION OF MONUMENTS AND REFERENCE POINTS

The Contractor shall ensure that any finds such as relic, antiquity, coins, fossils, etc. which he may come across during the course of performance of his Works either during excavation or elsewhere, are properly protected and handed over to the Employer. Similarly the Contractor shall ensure that the bench marks, reference points, etc., which are marked either with the help of Employer or by the Employer shall not be disturbed in any way during the performance of his Works. If, any work is to be preformed which disturb such reference, the same shall be done only after these are transferred to other suitable locations under the direction of the Employer. The Contractor shall provide all necessary materials and assistance for such relocation of reference points etc.

44.00.00 WORK □ SAFETY REGULATIONS

44.01.00 **G□□□r□□**

i) The contractor shall comply with all the requirements of "The Building and Other Construction Workers (Regulation of Employment & Conditions of Service) Act," 1996 and its Central Rule 1998 / State Rules and any other statutory requirements as applicable.

ii) The Contractor shall follow NTPC Safety Rules as issued from time to time with respect to safety in construction & erection.

iii) The contractor shall have the approved Safety, Health and Environment (SHE) Policy in respect of Safety and health of Building Workers and it shall be circulated widely and displayed at conspicuous place in Hindi and local language understood by the majority of the workers. A copy of the safety policy should be submitted to Engineer in charge.

iv) The contractor shall submit the safety plan comprising of methods to implement the Safety Policy/ Rules, Risk assessment and ensuring Safety at work areas, Safety audits, inspections and its compliance, Supervision and responsibility to ensure Safety at various levels, Safety training to employees, review of Safety and accident analysis, ensure Health and Safety Procedures to prevent accidents to Engineer I/c for approval as per the format of Safety plan as annexed at Annexure - III.

v) The Contractors shall ensure proper safety of all the workmen, materials, plant and equipment belonging to him or to the Employer or to others, working at the Site.

vi) All equipments used in construction and erection by the contractor shall meet BIS / International Standards and where such standards do not exist, the Contractor shall ensure these to be absolutely safe. All equipments shall be strictly operated and maintained by the contractor in accordance with manufacturer's operation manual. The contractor should also follow Guidelines / Rules of the Employer in this regard.

vii) The Contractors shall provide suitable latest Personal Protective Equipments of prescribed standard to all their employees and workmen according to the need. The Engineer I/c shall have the right to examine these safety equipments to determine their suitability, reliability, acceptability and adaptability. The contractor should also ensure these before their use at worksite.

viii) The Contractor shall provide safe working conditions to all workmen and employees at his workplace including safe means of access, railings, stairs, and ladders, scaffolding, work platforms, toe boards etc. The scaffoldings shall be erected under the control and supervision of an experienced and competent person. For erection of scaffolds, access, work platforms etc. shall be good and the contractor shall use standard quality of material.

ix) The Contractor shall follow and comply with all the Safety Rules, standards, code of practices of NTPC and relevant provisions of applicable laws pertaining to the safety of workmen, employees, plant and equipment as may be prescribed from time to time without any protest or contest or reservation. In case of any unconformity between statutory requirement and the Safety Rules of the Employer referred above, the latter shall be binding on the Contractor unless the statutory provisions are more stringent. As and when required he can refer / obtain copy of NTPC safety documents as stated above.

x) The contractor shall have his own arrangements with nearby hospitals for shifting and treatment of sick and injured.

The medical examination of the workers employed in hazardous areas shall be conducted as per Rule 223 0f The Building and Other Construction Worker (Regulation of Employment and Condition of Service) Central Rule 1998 Their health records shall be maintained accordingly and to be submitted to Engineer I/c when asked for. If any worker found suffering from occupational health hazard, the worker should be shifted to suitable place of working and properly treated under intimation to Engineer I/c. The medical fitness certificate to be submitted to Engineer (I/c).

xi) First Aid boxes equipped with requisite articles as specified in the Rule 231 of The Building and Other Construction Worker (Regulation of Employment and Condition of Service) Central Rule 1998 shall be provided at construction sites for the use of workers. Training has to be provided on first aid to workmen & office bearers working at site.

44.01.01 **E□ □r□□□□□ A□□□□□ P□□□**

The contractor shall prepare an emergency action plan approved by his competent authority to handle any emergency occurred during construction work. Regular mock drills shall be organized to practice this emergency plan. The Emergency Action Plan should be widely circulated to all the employees and suitable infrastructure shall be provided to handle the emergencies.

44.01.02 **S□□□□□d□□□**

The contractor shall take all precautions to prevent any accidental collapse of scaffolding or fall of persons from scaffolding. The contractor should ensure that scaffolding are designed by a competent person and it erection and repairs should be done under the expert supervision. The scaffolding shall meet the required strength and other requirements for the purpose for which the scaffold is erected. The material used for scaffold should conform to the BIS / International standards.

44.01.03 **O□□□□□□**

The contractor shall ensure that there is no opening in any working platform/any floor of the building, which may cause fall of workers or material. When ever an opening on a platform/any floor of the building is unavoidable, the opening should be suitably fenced and necessary measures for protection against falling objects or building workers from such platform are taken by providing suitable safety nets, safety belts or other similar means.

44.01.04 **E□□□□□□□□□**

The contractor shall take all precautions while handling, using, storing or transporting of all explosives. Before usage of any explosive necessary warning / danger signals be erected at conspicuous places to warn the workers and general public. The contractor should strictly ensure that all measures and precautions required to be complied for use, handling, storing or transportation of explosives under the rules framed under the Explosives Act, 1884.

44.02.00 **F**encing of **M**achine ry

The contractor shall provide suitable fencing or guard to all dangerous and moving parts of machinery.

The contractor shall not allow any of the employees to clean, lubricate, repair, adjust or examine during machinery in motion, which may cause injury to the person.

44.03.00 **C**a**rr**ying of **E**xcessive **W**eight by a **W□r□□r**

The worker shall not be allowed to lift by hand or carry over his head, back or shoulder more than the maximum limit set by the prescribed rules for the construction Workers.

44.04.00 **D**ange rous an **d H**a**r**mful **G**ases / **E**quipment

The contractor shall ensure that the workers are not exposed to any harmful gases during any construction activity including excavation, tunneling, confined spaces etc.

The contractor should not allow any worker to go into the confined space unless it is certified by Engineer (I/c) to be safe and fit for the entry to such work place. Proper record and work permits should be followed to carry out such works.

44.05.00 **O**ve rhea **d Pr**otection

The contractor shall ensure that any area exposed to risk of falling materials, articles or objects is roped off or cordoned off or otherwise suitably guarded from inadvertent entry of any person.

Wherever there is a possibility of falling of any material, equipment or construction workers while working at heights, a suitable and adequate safety net should be provided. The safety net should be in accordance with BIS Standards.

44.06.00 **W**o**r**king at **H**eights

All working platforms, ways and other places of construction work shall be free from accumulations of debris or any other material causing obstructions and tripping.

Wherever workers are exposed to the hazard of falling into water, the contractor shall provide adequate equipment for saving the employees from drowning and rescuing from such hazards. The contractor shall provide boat or launch equipped with sufficient number of life buoys, life jackets etc. manned with trained personnel at the site of such work.

Every opening at elevation from ground level through which a building worker, vehicle, material equipment etc. may fall at a construction work shall be covered and/or guarded suitably by the contractor to prevent such falls.

Wherever the workers are exposed to the hazards of falling from height, the contractor shall provide full harness safety belts fitted with fall arresting systems to all the employees working at higher elevations and life line of 8 mm diameter wire

rope with turn buckles for anchoring the safety belts while working or moving at higher elevations. Safety nets shall also be provided for saving them from fall from heights and such equipment should be in accordance with BIS standards.

Wherever there is a possibility of falling of any material, equipment or construction workers while working at heights, a suitable and adequate safety net should be provided. The safety net should be in accordance with BIS Standards.

The contractor shall provide standard prefabricated ladders on the columns where the workers are required to use them as an access for higher elevations till permanent staircase is provided. The workers shall be provided with safety belts fitted with suitable fall arresting system (Fall arrestors) for climbing/getting down through ladders to prevent fall from height.

44.07.00 **H□□d□□□ □□H□□□rd□□□ C□□□ □□□□**

The Contractor will notify well in advance to the Engineer I/c of his intention to bring to the Site any container filled with liquid or gaseous fuel or explosive or petroleum substance or such chemicals which may involve hazards. NTPC shall have the right to prescribe the conditions, under which such container is to be stored, handled and used during the performance of the works and the Contract shall strictly adhere to and comply with such instructions. The Engineer I/c shall have the right at his sole discretion to inspect any such container or such construction plant / equipment for which material in the container is required to be used and if in his opinion, its use is not safe, he may forbid its use. No claim due to such prohibition shall be entertained by NTPC and NTPC shall not entertain any claim of the Contractor towards additional safety provisions / conditions to be provided for / constructed.

Further, any such decision of the Engineer I/c shall not, in any way, absolve the Contractor of his responsibilities and in case, use of such a container or entry thereof into the Site area is forbidden by NTPC, the Contractor shall use alternative methods with the approval of the NTPC without any cost implication to the NTPC or extension of work schedule.

Where it is necessary to provide and / or store petroleum products or petroleum mixtures and explosives, the Contractor shall be responsible for carrying-out such provision and / or storage in accordance with the rules and regulations laid down in Petroleum Act 1934, Explosives Act 1948, and Petroleum and Carbide of Calcium Manual published by the Chief Inspector of Explosives of India. All such storage shall have prior approval of the Engineer I/c. In case any approvals are necessary from the Chief Inspector (Explosives) or any statutory authorities, the Contractor shall be responsible for obtaining the same.

The Contractor shall be fully responsible for the safe storage of his and his Sub-contractor's radio-active sources in accordance with BARC/DAE (Bhabha Atomic Research Centre/ Department of Atomic Energy, Govt. of India) Rules and other applicable provisions. All precautionary measures stipulated by BARC/DAE in connection with use, the contractor would take storage and handling of such material.

The contractor shall provide suitable personal protective equipments to the workers who are handling the hazardous and corrosive substances including alkalis and acids.

As a precautionary measure the contractor should keep the bottles filled with distilled water in cupboard / Boxes near work place for emergency eye wash by worker exposed to such hazardous chemicals.

44.08.00 **E□□ Pr□□□□□□□□□**

The contractor shall provide suitable personal protective equipment to his workmen depending upon the nature of hazards and ensure their usage by the workers engaged in operations like welding, cutting, chipping, grinding or similar operations which may cause injuries to his eyes.

44.09.00 **E□□□□□□□□□**

The contractor shall take all necessary measures during excavation to prevent the hazards of falling or sliding material or article from any bank or side of such excavation which is more than one and a half meter above his footing by providing adequate piling, shoring, bracing etc. against such bank or sides.

Adequate and suitable warning signs shall be put up at conspicuous places at the excavation work to prevent any persons or vehicles falling into the excavation trench. No worker should be allowed to work where he may be stuck or endangered by excavation machinery or collapse of excavations or trenches.

44.10.00 **E□□□r□□□□H□□□rd□**

The contractor should ensure that all electrical installations at the construction work comply with the requirements of latest electricity acts / rules.

The contractor shall take all adequate measures to prevent any worker from coming into physical contact with any electrical equipment or apparatus, machines or live electrical circuits which may cause electrical hazards during the construction work. The contractor shall provide the sufficient ELCBs / RCCBs for all the portable equipments, electrical switchboards, distribution panels etc. to prevent electrical shocks.

The contractor should ensure use of single / double insulated hand tools or low voltage i.e., 110 volts hand tools.

The contractor should also ensure that all temporary electrical installations at the construction works are provided with earth leakage circuit breakers.

44.11.00 **□□□□□□□r Tr□□□□**

The contractor should employ vehicle drivers who hold a valid driving license under the Motor Vehicles Act, 1988.

44.12.00 **L□□□□□ A□□□□□□□□ T□□□ □ T□□□□□□ L□□□□ G□r A□d Pr□□□r□ P□□□ □ E□□□□ □□□□□.**

The contractor shall ensure all the lifting appliances, tools & tackles including cranes etc., lifting gear including fixed or movable and any plant or gear, hoists, Pressure Plant and equipment etc. are in good condition and shall be examined by competent person and only certified shall be used at sites. Periodical Examination and the tests for all lifting / hoisting equipment & tackles shall be carried out. A register of such examinations and tests shall be properly maintained by the Contractor and will be promptly produced as and when desired by the Engineer I/c or by the person authorized by him.

44.13.00 **E□□□□□□□ N□□□□□ □r□□□**

The contractor shall take adequate measures to protect the workers against the harmful effect of excessive noise or vibration. The noise should not exceed the limits prescribed under the concerned rules, Noise Pollution (Regulation and Control) Rules, 2000.

44.14.00 **E□□r□□□ I□□□□□□□□**

44.14.01 The Contractor shall not interfere or disturb electric fuses, wiring and other electrical equipment belonging to the Employer or other contractors under any circumstances, whatsoever, unless expressly permitted in writing by the Engineer I/c to handle such fuses, wiring or electrical equipment.
Before the Contractor connects any electrical appliances to any plug or socket belonging to the other contractor or the NTPC, he shall

i) Satisfy the Engineer I/C that the appliance is in good working condition;

ii) Inform the Engineer I/C of the maximum current rating, voltage and phases of the appliances;

iii) Obtain permission of the Engineer I/C detailing the sockets to which the appliances may be connected.

The Engineer I/C will not grant permission to connect until he is satisfied that:

The appliance is in good condition and is fitted with suitable plug; having earth connection with the body.

Wherever armored / metallic sheathed multi core cable is used, the same armored / sheathed should be connected to earth.

iv) No repair work shall be carried out on any live equipment. The Engineer I/c must declare the equipment safe and a permit to work shall be issued by the NTPC / contractor as the case may be to carry out any repair / maintenance work. While working on electric lines / equipments whether live or dead, suitable type and sufficient quantity of tools will have to be provided by the contractor to electricians / workmen / Officers.

v) The contractor shall employ necessary number of qualified, full time Electricians / Electrical Supervisors to maintain his temporary electrical installation.

The installations are provided with suitable ELCBs and RCCBs wherever required.

44.15.00 **S□□□□□ Or□□□□□□□□□□**

44.15.01 The contractor employing more than 250 workmen whether temporary, casual, probationary, regular or permanent shall employ at least one full time safety officer exclusively to supervise safety aspects of the equipments and workmen, who will coordinate with the NTPC Safety Officer. Further requirement of safety officers, if any, shall be guided by Rule 209 of The Building and Other Construction Worker (Regulation of Employment and Conditions of Service) Central Rule 1998. In case the work is being carried out through subcontractor, the employees / workmen of the sub contractor shall also be considered as the contractor's employees/workmen for the above purpose.

In case of contractor deploying less than 250 workmen he should designate one of his Engr / supervisor or the contractor himself (if he is directly supervising the work) as safety officer in addition to his existing responsibilities. The Engr./ supervisor should get atleast 2days safety training from any reputed organization or from NTPC before resuming the work. If already trained in past the declaration along with trg. certificate to be furnished to NTPC safety officer.

44.15.02 The name and address of such Safety Officer of the Contractor will be promptly informed in writing to the EIC with a copy to the Project Safety Officer before he starts work or immediately after any change of the incumbent is made during currency of the Contract.

44.16.00 **R□□□r□□□ □□A□□d□□□□□d I□□□□□□□□□□□**

In case any accident occurs during the construction / erection or other associated activities undertaken by the Contractor thereby causing any near miss, minor or major or fatal injury to his employees due to any reason, whatsoever, it shall be the responsibility of the Contractor to promptly inform the same to the Engineer I/C, NTPC Safety Officer with a copy to NTPC Head of Project in the prescribed form and also to all the authorities envisaged under the applicable laws.

44.17.00 **R□□□□□ □□□□ W□r□**

44.17.01 The Engineer I/C shall have the right at his sole discretion to stop the work, if in his opinion the work is being carried out in such a way that it may cause accidents and endanger the safety of the persons and / or property, and / or equipments. In such cases, the contractor shall be informed in writing about the nature of hazards and possible injury / accident and he shall comply to remove shortcomings promptly. The Contractor after stopping the specific work can, if felt necessary appeal against the order of stoppage of work to the Project Manager within 3 days of such stoppage of work and decision of the Project Manager in this respect shall be conclusive and binding on the Contractor.

44.17.02 The Contractor shall not be entitled for any damages / compensation for stoppage of work, {Sub-Clause XVIII (I)} due to safety reasons and the period of such stoppage of work shall not be taken as an extension of time for Completion of the Facilities and will not be the ground for waiver of levy of liquidated damages.

44.18.00 **Fire Protection**

The contractor shall provide sufficient fire extinguishers at place /s of work. The fire extinguishers shall be properly maintained as per relevant BIS Standards. The employees shall be trained to operate the fire extinguishers / equipment.

44.19.00 **Penalty**

I If the Contractor fails in providing safe working environment as per the Safety Rules of NTPC or continues the work even after being instructed to stop the work by the Engineer I/C as provided in Clause XVIII (1) above, the Contractor shall be penalized at the rate of Rs. 25,000/- per day or part thereof till the instructions are complied with and so certified by the Engineer I/C. However, in case of accident, the provisions contained in Sub-Clause XX (II) below shall also apply in addition to the penalties mentioned in this sub-clause.

II If the Contractor does not take all safety precautions and / or fails to comply with the Safety Rules as prescribed by the Employer or under the applicable law for the safety of the plant and equipment and for the safety of personnel and the contractor does not prevent hazardous conditions which cause injury to this own employees or employees of other contractors, or NTPC's employees or any other person who are at the Site or adjacent thereto, the Contractor shall be responsible for payment of penalty to NTPC as per the following schedule:-

a) Fatal injury or accident causing death:

Penalty @10% of contract value or Rs. 5,00,000/- per person, which ever is less.

b) Major injuries or accident causing 25% or more permanent disablement to workmen or employees:

Penalty @2.5% of contract value or Rs. 1,00,000/- per person which ever is less

Permanent disablement shall have the same meaning as indicated in The Workmen's Compensation Act' 1923. The penalty mentioned above shall be in addition to the compensation payable to the workmen / employees under the relevant provisions of the Workmen's Compensation Act' 1923 and rules framed there under or any other applicable laws as applicable from time to time.

III If any contractor worker found working without using the safety equipment like safety helmet, safety shoes, safety belts, etc. or without anchoring the

safety belts while working at height the Engineer I/c / Safety Officer of NTPC shall have the right to penalize the contractor for Rs. 200/- per person per day and such worker shall be sent out of the workplace immediately and shall not be allowed to work on that day. Engineer I/c / Safety Officer of NTPC will also issue a notice in this regard to the contractor.

IV If two or more fatal accidents occur at same NTPC site under the control of contractor during the period of contract and he has

(1) not complied with keeping adequate PPEs in stock or

(2) defaulted in providing PPEs to his workmen

(3) not followed statutory requirements / NTPC safety rules

(4) been issued warning notice/s by NTPC head of the project on non observance of safety norms

(5) not provided safety training to all his workmen, the contractor can be debarred from getting tender documents in NTPC for two years from the date of last accident.

The safety performance will also be one of the overriding criteria for evaluation of overall performance of the contractors by NTPC. The contractor shall submit the accident data including fatal / non-fatal accidents for the last 3 years where he has undertaken the construction activities Projects-wise along with the tender documents. This will also be considered for evolution of tender documents. If the information given by the contractor found incorrect, his contract will be liable to be terminated.

44.20.00 The Contractor will make available minimum quantity of all safety equipments and safety personal protection equipments (PPEs) of required specifications as per suggestive list included bidding documents as a part of "List of minimum T & P". Further Contractor will ensure availabilitty of additional requirement for individual worker and safety equipment as per site requirement during execution of the contract till its completion.

44.21.00 **A□ □rd**

If the Contractor's performance on safety front is found satisfactory i.e. without any fatal/reportable accident in the year of consideration; he may be considered for suitable award "ACCIDENT FREE SAFETY MERITORIOUS AWARD" as per scheme of the employer.

44.22.00 **T□□ C□□□r□□□□r □□□□□□□□d□ □□ □□□ □□□□□ □□□ d□r□□ C□□□□r□□□□□ □□d Er□□□□□□ □□□□□□□□□□:**

I. Chain pulley block shall not be used for loads more than 2 (Two) tonne.

II. Hydra shall not be used for material transport.

III. Cage shall necessarily be provided to Monkey ladders of height more than 4 m.

IV. Fencing shall be provided to all Electrical Distribution boards and transformers etc.

4□.00.00 FOREIGN PERSONNEL

45.01.00 The Contractor shall submit to the Employer data on all personnel he proposes to bring into India from abroad for the performance of the Works under the Contract, at least sixty (60) days prior to their departure to India. Such data will include for each person the name, his present address, his assignment and responsibility in connection with the works, and a short resume of his qualification, experience etc. in relation to the work to be performed by him.

45.02.00 Any person unsuitable and unacceptable to the Employer shall not be brought to India. Any person brought to India, if found unsuitable or unacceptable by the Employer, the Contractor shall within a reasonable time make alternate arrangements for providing a suitable replacement and repatriation of such unsuitable personnel.

45.03.00 No person brought to India for the purposes of the works shall be repatriated without the consent of the Employer in writing, based on a written request from the Contractor for such repatriation giving reasons for such an action to the Employer. The Employer may give permission for such repatriation provided he is satisfied that the progress of work will not suffer due to such repatriation.

45.04.00 The cost of passports, visas and all other travel expenses to and from India, incurred by the Contractor shall be to his account. The Employer will not provide any residential accommodation and/or furniture for any of the Contractor's personnel including foreign personnel and Contractor shall make his own arrangements for such facilities in the area allotted at Site, to him by the Employer for that purpose.

45.05.00 The Contractor and his expatriate personnel shall respect all Indian Acts, Laws, rules and regulations and shall not in any way interfere with Indian political and religious affairs and shall conform to any other rules and regulations which the Government of India and the Employer may establish from time to time, on them. The Contractor's expatriate personnel shall work and live in close co-operation and coordination with their co-workers and the community and shall not engage themselves in any other employment neither part-time nor full-time nor shall they take part in any local politics.

45.06.00 The Employer shall assist the Contractor, to the extent possible, in obtaining necessary permits to travel to India and back, by issue of necessary certificates and other information needed by the Government agencies.

4□.00.00	**FOUNDATION DRESSING □ GROUTING FOR EQUIPMENT□ EQUIPMENT BASES**
46.01.00	The surfaces of foundations shall be dressed to bring the top surface of the foundations to the required level, prior to placement of equipment/equipment bases on the foundations.
46.02.00	All the equipment/ equipment bases, shall be grouted and finished by bidder as per these specifications unless otherwise recommended by the equipment manufacturer.
46.03.00	The concrete foundation surfaces shall be properly prepared by bidder by chipping, grinding as required to bring the top of such foundation to the required level, to provide the necessary roughness for bondage and to assure enough bearing strength.
46.04.00	**Gr□□□** The grout for equipment foundation shall be high strength grout having a minimum characteristic compressive strength of 60 N/mm2 at 28 days. The grout shall be ready mix non-shrink, chloride - free, cement based, free flowing, non-metallic grout as recommended by equipment manufacturer. The ready mix grout shall be of reputed make as approved by the Employer. The Grout shall have good flowability even at very low water/ grout powder ratio. The Grout shall have characteristics of controlled expansion to be able to occupy its original volume to fill the voids and to compensate for shrinkage. Grout shall be of pre-mix variety so that only water needs to be added before use. The mixing of the Grout shall conform to the recommendations of the manufacturer of the Grout.
46.05.00	**P□□□□□□ □□Gr□□□**
46.05.01	After the base has been prepared, its alignment and level has been checked and approved and before actually placing the grout, a low dam shall be set around the base at a distance that will permit pouring and manipulation of the grout. The height of such dam shall be at least 25mm above the bottom of the base. Suitable size and number of chains shall be introduced under the base before placing the grout, so that such chains can be moved back & forth to push the grout into every part of the space under the base.
46.05.02	The grout shall be poured either through grout holes if provided or shall be poured at one side or at two adjacent sides to make the grout move in a solid mass under the base and out in the opposite side. Pouring shall be continued until the entire space below the base is thoroughly filled and the grout stands at least 25 mm higher all around than the bottom of the base. Enough care should be taken to avoid any air or water pockets beneath the bases.
46.05.03	In addition to the above, recommendations of Grout manufacturer shall also be followed.

46.06.00 **F□□□□□□□□ □□□□□ Ed□□□ □□□□□ Gr□□□**

The poured grout should be allowed to stand undisturbed until it is well set. Immediately thereafter, the dam shall be removed and grout which extends beyond the edges of the structural or equipment base plates shall be cut off, flushed and removed. The edges of the grout shall then be pointed and finished with 1:2 cement mortar pressed firmly to bond with the body of the grout and smoothened with a tool to present a smooth vertical surface. The work shall be done in a clean and scientific manner and the adjacent floor spaces, exposed edges of the foundations, and structural steel and equipment base plates shall be thoroughly cleaned of any spillage of the grout.

46.07.00 **C□□□□□□□ □□E□□□□ □□□A□□r Gr□□□□□**

After the grout is set and cured, the Contractor shall check and verify the alignment of equipments, alignment of shafts of rotating machinery, the slopes of all bearing pedestals, centering of rotors with respect to their sealing bores, couplings, etc. as applicable and the like items to ensure that no displacement had taken place during grouting. The values recorded prior to grouting shall be used during such post grouting check- up and verifications. Such pre and post grout records of alignment details shall be maintained by the Contractor in a manner acceptable to the Employer.

4□.00.00 SHAFT ALIGNMENTS

All the shafts of rotating equipment shall be properly aligned to those of the matching equipments to as perfect an accuracy as practicable. The equipment shall be free from excessive vibration so as to avoid overheating of bearings or other conditions which may tend to shorten the life of the equipment. The vibration level of rotating equipments measured at bearing housing shall conform to Zone A of ISO 10816. All bearings, shafts and other rotating parts shall be thoroughly cleaned and suitably lubricated before starting.

4□.00.00 DOWELLING

All the motors and other equipment shall be suitably doweled after alignment of shafts with tapered machined dowels as per the direction of the Employer.

4□.00.00 CHECK OUT OF CONTROL SYSTEMS

After completion of wiring, cabling furnished under separate specification and laid and terminated by the Employer, the Contractor shall check out the operation of all control systems for the equipment furnished and installed under these specifications and documents.

50.00.00 **COMMISSIONING SPARES**

50.01.00 It will be the responsibility of the Contractor to provide all commissioning spares including consumable spares required for initial operation till the Completion of Facilities. The Contractor shall furnish a list of all commissioning spares within 60

	days from the date of Notification of Award and such list shall be reviewed by the Employer and mutually agreed to. However. such review and agreement will not absolve the Contractor of his responsibilities to supply all commissioning spares so that initial operation do not suffer for want of commissioning spares. All commissioning spares shall be deemed to be included in the scope of the Contract at no extra cost to the Employer.
50.02.00	These spare will be received and stored by the Contractor atleast 3 months prior to the schedule date of commencement of initial operation of the respective equipment and utilised as and when required. The unutilised spares and replaced parts, if any, at the end of successful completion of guarantee tests shall be the property of the Contractor and he will be allowed to take these parts back at his own cost with the permission of Employer.
□1.00.00	**CABLING**
51.01.00	All cables shall be supported by conduits or cable tray run in air or in cable channels. These shall be installed in exposed runs parallel or perpendicular to dominant surfaces with right angle turn made of symmetrical bends or fittings. When cables are run on cable trays, they shall be clamped at a minimum intervals of 2000mm or otherwise as directed by the Employer.
51.02.00	Each cable, whether power or control, shall be provided with a metallic or plastic tag of an approved type, bearing a cable reference number indicated in the cable and conduit list (prepared by the Contractor), at every 5 meter run or part thereof and at both ends of the cable adjacent to the terminations. Cable routing is to be done in such a way that cables are accessible for any maintenance and for easy identification.
51.03.00	Sharp bending and kinking of cables shall be avoided. The minimum radii for PVC insulted cables 1100 V grade shall be 15 D where D is the overall diameter of the cable. Installation of other cables like high voltage, coaxial, screened, compensating, mineral insulated shall be in accordance with the cable manufacturer's recommendations. Wherever cables cross roads and water, oil, sewage or gaslines, special care should be taken for the protection of the cables in designing the cable channels.
51.04.00	In each cable run some extra length shall be kept at a suitable point to enable one or two straight through joints to be made, should the cable develop fault at a later date.
51.05.00	Control cable terminations shall be made in accordance with wiring diagrams, using identifying codes subject to the Employer's approval. Multicore control cable jackets shall be removed as required to train and terminate the conductors. The cable jacket shall be left on the cable, as far as possible, to the point of the first conductor branch. The insulated conductors from which the jacket is removed shall be neatly twined in bundles and terminated. The bundles shall be firmly but not tightly tied utilising plastic or nylon ties or specifically treated fungus protected cord made for this purpose. Control cable conductor insulation shall be securely and evenly cut.
51.06.00	The connectors for control cables shall be covered with a transparent insulating sleeve so as to prevent accidental contact with ground or adjacent terminals and

shall preferably terminate in Elmex terminals and washers. The insulating sleeve shall be fire resistant and shall be long enough to over pass the conductor insulation. All control cables shall be fanned out and connection made to terminal blocks and test equipment for proper operation before cables are corded together.

52.00.00 **EQUIPMENT DELI□ERY AND ERECTION**

52.01.00 **G□□□r□□R□□□□r□□ □□□□**

(a.) This part covers Contractor's responsibilities for packing, shipping, ware-housing and the installation of all equipment and materials furnished and installed under this specification.

(b.) The Contractor shall submit for Employer's approval draft manual for Equipment Delivery and Erection (EDE Manual) covering detailed instructions, write up, technical data, drawings, check-lists, documentation formats for all activities after equipment manufacture upto installation of equipment. This manual shall cover general instructions for all equipment and specific instructions for individual equipment wherever required and shall include at least the following :

(1.) Instructions for packing, shipping, receiving handling, ware-housing and storage.

(2.) Instructions for location and installation of equipment furnished by this specification.

(3.) Installation drawings for field mounted equipment, panels, cubicles and other equipment covered under this specification.

(4.) Instruction relating installation of piping/ tubing, support and routing drawings of impulse pipes/signal tubes and tube/cable trays.

(5.) Check lists and quality assurance hold points.

(6.) Format for all related documentation.

(c.) The EDE Manual shall conform to the requirements of this specification, all applicable codes and standards, recommendations of equipment manufacturers and accepted good engineering practices and shall be subject to Employer approval during detailed engineering.

(d.) The Contractor shall ensure that all work under this part shall be performed as per the requirements of this specification, Employer approved EDE Manual and drawing/documents approved by the Employer during detailed engg.

52.02.00 **Cr□□□□□**

(a.) All equipment and materials shall be suitably coated, wrapped, or covered and boxed or crated for moist humid tropical shipment and to prevent damage or deterioration during handling and storage at the site.

(b.) Equipment shall be packed with suitable desiccants, sealed in water proof vapour-proof wrapping and packed in lumber of plywood enclosures, suitably braced, tied and skidded. Lumber enclosures shall be solid, not slatted.

(c.) Desiccants shall be either silica gel or calcium sulphate, sufficiently ground to provide the required surface area and activated prior to placing in the packaging. Calcium sulphate desiccants shall be of a chemical nature to absorb moisture. In any case, the desiccant shall not be of a type that will absorb enough moisture to go into solution. Desiccants shall be packed in porous containers, strong enough to withstand handling encountered during normal shipment. Enough desiccant shall be used for the volumes enclosed in wrapping.

(d.) Review by the Employer of the Contractor's proposed packaging methods shall not relieve the Contractor of responsibility for damage or deterioration to the equipment and materials specified.

(e.) All accessory items shall be shipped with the equipment. ; Boxes and crates containing accessory items shall be marked so that they are identified with the main equipment. The contents of each box and crates shall be indicated by markings on the exterior.

(f.) All boxes, crates, cases bundles, loose pieces, etc. shall be marked consecutively from No.1 upward throughout all shipments from a given port to completion of the order without repeating the same number.

(g.) An itemized list of contents shall be enclosed inside each case and one other copy securely fastened to the outside of the case in a tin or light weight sheet metal envelope or pocket. The lists shall be plainly marked and placed in accessible locations to facilitate receipt and inspection. The packing list shall indicate whether shipment is partial or complete and shall incorporate the following information on each container, etc., according to its individual shipping number:

a) Export case markings

b) Case number

c) Gross weight and net weight in Kilograms

d) Dimensions in centimeters

e) Complete description of material

(h.) Packaging or shipping units shall be designed within the limitations of unloading facilities and the equipment which will be used for transport.

Complications involved with ocean shipment and the limitations of ports, railways and roads shall be considered. It shall be the Contractor's responsibility to investigate these limitations and to provide suitable packaging to permit safe handling during transit and at the job site.

(i.) Electrical equipment, control and instrumentation shall be protected against moisture and water damage. All external gasket surfaces and flange faces, couplings, motor pump shafts, bearing and like items shall be thoroughly cleaned and coated with rust preventive compound as specified above and protected with suitable wood, metal or other substantial type covering to ensure their full protection.

(j.) Equipment having antifriction or sleeve bearings shall be protected by weather tight enclosures.

(k.) Coated surfaces shall be protected against impact, abrasion, discolouration and other damage. Surfaces which are damaged shall be repaired.

(l.) All exposed threaded parts shall be greased and protected with metallic or other substantial type protectors. All female threaded openings shall be closed with forged steel plugs. All pipings, tubing, and conduit equipment and other equipment openings shall be sealed with metallic or other rough usage covers and tapped to seal the interior of the equipment piping, tubing, or conduit.

(m.) Provisions shall be made to ensure that water does not enter any equipment during shipment or in storage at the plant site.

(n.) Returnable containers and special shipping devices shall be returned by the manufacturer's field representative at the Contractor's expense.

(o.) While packaging the material, care shall be taken for the limitation from the point of view of availability of railway wagon sizes in India.

52.03.00 **F□□□□r□ A□□□□ □□**

(a.) Instrument enclosures shall be supplied and erected completely in the factory with instrument, air supply and blow down piping with necessary valves, fittings, etc. and also all electrical wiring between the instruments and the enclosure terminal blocks. Control panel and cubicles shall also be fully wired in the factory. Control panel mounted equipments are to be dismounted from the panels before shipment and individually packed for shipment. Electronic control modules of the plug-in type are to be removed from equipment racks after factory checkout are individually packed for shipment. Other equipment shall be fully assembled at the factory, except for necessary shipping splits in panels.

(b.) All separately packaged accessories items and parts shall be shipped with the equipment. Containers for separately packaged items shall be marked so that they are identified with the main equipment. An itemized packing slip,

indicating what is in that carton only, shall be attached to the outside and inside of each container used for packing.

A master packing slip covering all accessories items for a given piece of equipment which are shipped in separate containers, shall be attached to one container.

52.04.00 **E□□□□ □□□I□□□□□□□□□**

(a.) **G□□□r□□R□□□□r□□ □□□**

(1.) The Contractor shall furnish all construction materials, tools and equipment and shall perform all work required for complete installation of all control and instrument equipment furnished under this specification.

(2.) Contractor shall prepare detailed installation drawings for each equipment furnished under this specification for Employer's approval. Installation of all equipment/systems furnished by this specification shall be as per Employer's approval.

(3.) Erection procedures not specified herein shall be in accordance with the recommendations of the equipment manufacturers. The procedures shall be acceptable to the Employer.

(4.) The Contractor shall coordinate his work with other suppliers where their instruments and devices are to be installed under specifications.

(b.) **I□□□□□□□□□□□ M□□□r□□□**

All materials required for installation, testing and commissioning of the equipment shall be furnished by the Contractor.

(c.) **R□□□□□□□r□ R□□□□r□□ □□□**

All installation procedures shall confirm with the accepted good engineering practice and with all applicable governmental laws, regulations and codes.

(d.) **C□□□□□□**

All equipment shall be cleaned of all sand, dirt and other foreign materials immediately after removal from storage and before the equipment is brought inside the power plant building or to other installation sites. All piping and tubes shall be air blown.

(e.) **E□□□□□ □□□A□□□□ □□□**

Equipment installed under these specifications shall be assembled if shipped unassembled. The equipment shall be dismantled and reassembled as

required to perform the installation and commissioning work described in these specifications.

(f.) **E**quipment **S**etting

Field mounted instruments and accessories shall be bracket or sub panel mounted on the nearest suitable firm steel work or masonry. The brackets, stands, supports and other miscellaneous hardware required for mounting instruments and accessories such as receiver gauge, air set, valve manifold, purge-meter etc. shall be furnished and installed. No field mounted instruments shall be installed such that it depends for support or rigidity on the impulse piping or on electrical connection to it.

Indicating type field mounted instruments shall be installed in such a way that centre of indicating dial shall be about 1600-1800mm from operating floor level. Non-indicating type field instruments shall be installed such that operating handle of manifold block / isolating cock comes within 1600 mm from operating floor level.

(g.) **Fr□□-S□□□d□□□ E**quipment

Free-standing Cabinets shall be attached to the floor, concrete equipment bases or supporting steel as indicated on the manufacturer's drawings and the Employer's Plant Arrangement Drawings. The cabinets shall be shimmed for proper alignment before bolting them to the floor. Adjacent enclosures shall be shimmed to maintain mutually level appearance before they are attached to floor. Vibration dampening mounts shall be installed between supporting structures and panels when specified.

(h.) **N□□-□r□□ S**tan**d**ing **E**quipment

(1.) Non-free standing local enclosures and cabinets shall be mounted in accessible locations on columns, walls, or stands in locations as indicated on the Employer's Plant Arrangement Drawings. Bracket and stands shall be fabricated as required to install the local enclosures and cabinets in a workman like manner.

(2.) Rough edges and welds on all fabricated supports shall be ground smooth. The supports shall be finished with two coats of primer and two coats of paint as specified in this part.

(i.) **E□□□□□ □□□L□□□□□□□**

(1.) All individual items of equipment not located in cabinets or on panels and racks are located approximately according to the floor elevation and the nearest building column designated by the Employer.

(2.) Solenoid valves not located in enclosures or mounted on valves shall be mounted in easily accessible protected locations near the components with which they are associated.

(3.) All brackets, stands, supports and other miscellaneous hardware required for mounting devices shall be furnished and installed.

(4.) Thermometers shall be installed in the process lines and ducts as required and adjusted for ease in reading.

(5.) Permanent temperature wells on the main steam, hot reheat and cold reheat piping shall not be installed until steam blowing has been completed. Temporary temperature wells shall be installed in the main and reheat steam piping during steam blow and discarded after completion.

(6.) Any required adapting hardware such as pipe bushings, nipples, drilled caps and the like shall be provided for complete installation of control devices into process connections.

For location of C&I related equipment/devices, the requirement specified elsewhere in the technical specification may be referred.

(j.) **I□□□□□□□□□□ □□F□□d M□□□□□d I□□r□□ □□□□ □□d D□□□□□□**

The Contractor shall submit installation drawings for all field mounted equipment furnished under this specification for Employer's approval. These drawings shall meet the requirements of this specification, installation drawings, applicable codes and standards and recommendations of manufacturers of instruments/devices. All installation work under this specification shall be strictly as per installation drawings approved by the Employer during detailed engineering stage.

In addition to above relevant Portion as specified elsewhere in technical specification may be referred.

(k.) **P□□□□ C□□□□□□□□□**

(1.) All equipment having piping connections shall be levelled, aligned and wedged in place but shall not be grouted or bolted prior to the initial fitting and alignment of connecting piping. All equipment shall, however, be grouted or bolted to its foundation prior to final bolting or welding of the connection piping.

(2.) All flanged joints shall be checked and retightened after approximately 10 days of operation at normal operating temperature.

(l.) **E□□□□ □□□C□□□□□□**

(1.) All equipment shall be cleaned after installation. Equipment subject to pressure differentials shall be checked for leakage.

(2.) After erection, all equipment having moving parts, having electrical apparatus, or subject to pressure differentials shall be trial-operated.

(m.) **D□□□□□□**

(1.) All defects in erection shall be corrected to the satisfaction of the Employer and the Project Manager. The dismantling and reassembly of Contractor furnished equipment to remove defective parts, replace parts, or make adjustments shall be included as a part of the work under these specifications.

(2.) The removal of control and instrument equipment in order to allow bench calibration, if required, and the re-installation of the said equipment after calibration shall also be included as a part of the work under these specifications.

(n.) **E□□□□□ □□□Pr□□□□□□□**

(1.) All equipment to be erected under these specifications shall be protected from damage of any kind from the time of contract award until commissioning of each unit.

(2.) The equipment shall be protected during storage as described herein.

(3.) Equipment shall be protected from weld spatter during construction.

(4.) Suitable guards shall be provided for protection of personnel on all exposed rotating or moving machine parts. All such guards with necessary spares and accessories shall be designed for easy removal and maintenance.

(5.) Equipment having glass components such as gauges, or equipment having other easily breakable components, shall be protected during the construction period with plywood enclosures or other suitable means. Broken, stolen, or lost components shall be replaced by the Contractor.

(6.) Machine finished surfaces, polished surfaces, or other bare metal surfaces which are not to be painted, such as machinery shafts and couplings shall be provided temporary protection during storage and constructional periods by a coating of a suitable non- drying, oily type, rust preventive compound.

□□.00.00 **WELDING - SPECIAL REQUIREMENTS**

If the manufacturer has special requirements relating to the welding procedures for welds at the terminals of the equipments to be performed under separate specifications, the requirements shall be submitted to the Project Manager in advance of commencement of erection work.

□4.00.00 **DE□IATIONS DISPOSITIONING:**

Any deviation to the contract and employer approved documents shall be properly recorded in the format prescribed by NTPC. All the deviations shall be bought to the knowledge of employer's representative for suitable dispositioning.

□□.00.00 **NON-DESTRUCTI□E TESTING (NDT):**

The contractor shall record results of NDTs carried out at site in the format acceptable to employer. All the radiographs & its report duly signed & correlated to the job shall be handed over to the employer. Sensitivity of all the test equipment shall be compatible to the job & acceptance norms agreed.

□□.00.00 **TESTING EQUIPMENT □ FACILITIES:**

Contractor shall provide the testing equipment and facilities necessary to carry out tests & inspections.

ANNE□URE-I

STANDARD CHECKLIST

This is an indicative list of items. The actual list shall depend on the Equipment / System being supplied by the contractor.

MECHANICAL

□AL□ES

1. Manually Operated Valve
2. Electrically Operated Valve
3. Pneumatically Actuated Valve
4. Hydraulically Actuated Valve
5. Safety Valve
6. Electromatic Relief Valve
7. Steam Trap
8. Non Return Valve (including Hydraulic/ Pneumatic QCNRVS)
9. Control Valve
10. Relief Valve
11. Differential Pressure Regulating Valve
12. Pinch valve

TANKS □ PRESSURE □ESSELS

1. Limestone silos
2. Gypsum storage silos
3. Limestone slurry tanks
4. Filtrate tank
5. Waste water tank

6. Secondary hydrocyclone feed tank
7. Lime dosing tank
8. Process water tank
9. Absorber
10. Auxiliary absorbent tank
11. Mill circuit tank
12. Any other tank not covered above
13. Vacuum tanks
14. Air Receiver(if any)

PUMPS

1. Slurry recirculation pumps
2. Gypsum bleed pumps
3. Limestone slurry pumps
4. Process water pumps
5. All other slurry pumps
6. Vacuum pumps
7. Sump pumps

PIPE WORK SYSTEM

1. Steam services
2. Water services
3. Slurry services
4. Air services
5. Constant load support
6. Spring supports
7. Hangers and other Supports

STRAINER AND FILTER

1. Strainer / Filter Basket Type
2. Strainer Rotary (Low Pressure)
3. Filter & Strainers Centrifugal Separators
4. Filter & Strainer Y-Type
5. Filter & Strainer (Plate Type)
6. Purifier
7. Filter – Compressed Air Line

FANS □ COMPRESSORS

1. Booster Fans (if provided) – Axial Flow pressure Lubricated
2. Oxidation Blowers/Compressors-General

DAMPERS □ GATES

1. Manually Operated Damper
2. Pneumatically Operated Damper
3. Electrically Operated Damper
4. Manually Operated Gates
5. Pneumatically Operated Gate
6. Electrically Operated Gate

DUCT WORK

1. Flue Gas Ducting
2. Expansion Joints
3. Observation & Access Door

CRANES AND ELE□ATORS

1. Crane
2. Hoists

3. Passenger cum goods elevator

POWER TRANSMISSION

1. Power Transmission Gear Box
2. Bearings
3. Couplings

FGD □ AU□.SYSTEM

1. Agitators
2. Air Motor
3. Process trustle
4. Limestone feeder
5. Vacuum belt filter
6. Limestone ball mill
7. Limestone Hydrocyclones
8. Primary Hydrocyclones
9. Secondary Hydrocyclones
10. Absorber internals
11. Absorber Auxiliaries

ELELCTRICAL

1. D.C. Motor
2. HV Squirrel Cage Induction Motor
3. 415 V Squirrel Cage Induction Motor
4. Motor Operated Actuators
5. Soot Blower (GGH)
6. Aux. Control and Relay Panel Desk
7. SWITCHGEARS/MCC

(I.) STANDARD CHECLISTS FOR ALL TYPES OF RELAYS USED IN SWITCHGEARS PROTECTION SYSTEM

(II.) PT CARRIAGE AND CUBICLES

(III.) CABLE/BUS DUCT/BUS BARS

(IV.) CONTRACTOR MODULE

(V.) SWITCH FUSE MODULE

(VI.) MASTER PANEL OF LUBE OIL PANEL

(VII.) FEEDER PANEL OF LUBE OIL PANEL

(VIII.) SPACE HEATER AND CABLE MODULE

(IX.) HT CIRCUIT BREAKER

(X.) 415 V CIRCUIT BREAKER

POWER CABLE

AUXILIARY CABLE

D.C. CABLE

EXPLOSION PROOF ELECTRICAL EQUIPMENT

JUNCTION BOX

CONTROL TRANSFORMER MODULE

BRUSH GEAR ASSEMBLY

AUX. CONTROL AND RELAY PANEL DESK

INDICATING INSTRUMENT

RECORDING INSTRUMENT

INTEGRATING INSTRUMENT

CONTROL □ INSTRUMENTATION

1. Conductivity Measuring Equipment Including Test Procedures
2. pH Analyser Including Test procedure

3. Silica Analyser
4. Level Switch (Float Actuated)
5. Level Switch (Electrode Type)
6. Level Switch (Displacer Actuated)
7. Transmitter (Float Operated Pneumatic Output including Testing procedures
8. Level indicator (Float/Pulley Type)
9. Local Temperature Indicator Including Test Procedure
10. Resistance Thermometer Element Including Test procedure
11. Thermocouple Element and Connecting Cable
12. Thermocouple and Resistance Thermometer Convertor/Transmitter Including Test Procedures
13. Temperature Switch Including Test Procedure
14. Cold Junction Boxes
15. 0_2Analyser
16. SO2 analyzer
17. 0_2 in Hydrogen including Test procedures
18. Pressure and Vacuum Gauge
19. Pressure and Vacuum Switch Including Test procedures
20. Differential Pressure Transmitter including Test Procedures
21. Differential pressure switch including Test procedures
22. Flow indicator (Variable Area)
23. Orifice plate
24. Flow Switch
25. Nozzle
26. Flow Integrator (pneumatic input) including test procedure

27. Flow indicator (Float Operated) Including Test Procedure
28. Venturi (Fluid)
29. Flow Switch (Magnetic Type)
30. Limit Switches
31. Turbine Supervisory Measuring System
32. Position Measurement & Indication Including Test procedures
33. Vibration Measurement
34. Digital Indicator
35. Moving Coil Indicator Including Test Procedures
36. Recorder Including Test procedure
37. Flame Scanner
38. Electrical Auto Manual Control Station
39. Push Button Module
40. Test Procedure for Electronic Modules of DDCMIS
41. Alarm Annunciator Equipment Including Test Procedure
42. Test procedure for Adjustment of Modulating Controller-PID Term
43. Test Procedure Indicating Controller-Electrical Input & Pneumatic Output
44. Density monitors

Note: The items which are not part of this specification may be considered as not applicable.

ANNE□URE-II

BRIEF WRITE UP ON THE CONTENTS OF TESTING SCHEDULE □COMMISSIONING SCHEDULE

Testing Schedules should be designed to ensure that the plant area, equipment or apparatus are tested and commissioned and will operate as per the employer's specifications and good engineering practices.

Testing Schedule/Commissioning Schedule is required to be of a standard format in order to maintain consistency of presentation, content and reporting.

Testing Schedule/Commissioning Schedule should contain the following sections to make the document a self contained one:

1. Plant Details/Design data
2. Testing Objective/Proposals
3. State of the Plant
   - a) Erection Status with respect to Mech. Elect and C&I
   - b) Availability of the services required
   - c) Safety requirements as per Manufacturer's
4. Test method including completion/acceptance criteria
5. Results
6. Appendix
   - a) Testing Programme
   - b) Mech/Elect/C&I -Plant item completing list
   - c) List of Drawing/documents required for carrying out the testing.

ANNE□URE - III

SAFETY PLAN

01. Safety Policy of the Contractor to be enclosed:
02. When was the Safety Policy last reviewed:
03. Details of implementation procedure / methods to implement Safety Policy / Safety Rules:
04. Name, Qualification, experience of Safety Officer
05. Review of Accidents Analysis Method, Methods to ensure Safety and Health:
06. Unit executive responsible to ensure Safety at various levels in work area:
07. List of employees trained in safety employed before execution of the job. Give the details of training:
08. Safety Training Targets, Schedules, methods Adopting to providing safety training to all employees:
09. Details of checklist for different jobs / work and responsible person to ensure compliance (copy of checklist to be enclosed):
10. Regular Safety Inspection Methods and Periodicity and list of members to be enclosed:
11. Risk Assessment, Safety Audit by Professional Agencies, Periodicity:
12. Implementation of Recommendations of Audit / Inspections. Procedures for implementation and follow up:
13. Provision for treatment of injured persons at work site:
14. Review of overall safety by top Management and Periodicity:
15. System for Implementation of Statutory legislations:
16. Issue of PPEs to employees, Periodicity / stock on hand etc:

Signature
Head of the Organisation
with date & stamp

NTPC Limited

(A Government of India Enterprise)

NORTH KARANPURA SUPER THERMAL POWER PROJECT (3x660MW)

PART – E

TENDER DRAWINGS

SECTION – VI

FOR

FLUE GAS DESULPHURISATION (FGD) SYSTEM PACKAGE

BIDDING DOCUMENT NO.: CS-4410-109-2

NTPC Limited

(A Government of India Enterprise)

NORTH KARANPURA SUPER THERMAL POWER PROJECT (3x660MW)

PART – E

TENDER DRAWINGS

SECTION – VI

FOR

FLUE GAS DESULPHURISATION (FGD) SYSTEM PACKAGE

BIDDING DOCUMENT NO.: CS-4410-109-2

(This document is meant for the exclusive purpose of bidding against this Package and shall not be transferred, reproduced or otherwise used for purposes other than that for which it is specifically issued).

1.00.00 APPLICABLE DRAWINGS

The drawings listed below and forming part of the specification (Refer Part-E) shall supplement the requirements specified herein. The scope and terminal points of the equipment to be furnished under this steam generator package shall be as identified in these drawings and read in conjunction with text of the specification:

(A) LAYOUT & CIVIL DRAWINGS

(1) Layout Plan of FGD System : Drg No.: 4410-999-POC-F-001

(2) Layout of FGD Area : Drg No. : 4410-999-POM-A-001

(B) SCHEMES

Sl. No	Drawings Title	Drawings No.	Rev. No.	No. of Sheets
1)	P&ID Diagram - ECW System for FGD	4410-000-POM-A-00	0	1
2)	FGD Plant Water Scheme	4410-000-POM-A-01	0	1
3)	Lime Stone Flow Diagram	4410-000-2-POM-A-002	A	2
4)	Scheme of Absorber system	4410-109-POM-A-005	A	1
5)	Scheme of Limestone Milling system	4410-109-POM-A-006	A	1
6)	Scheme of Gypsum De-watering system	4410-109-POM-A-007	A	1

(C) CONTROL & INSTRUMENTATION

Sl. No.	Drawings Title	Drawings No.	No. of Sheets
1.	Standard configuration diagram for PLC	0000-151-POI-A-013	1
2.	G.A. of Junction Box	0000-999-POI-A-017	1
3.	Instrumentation cabling diagram grounding scheme for cabinets/panels/Power Supply	0000-999-POI-A-019A	2

Sl. No.	Drawings Title	Drawings No.	No. of Sheets
4.	Scheme of 24V DC Power supply system	0000-999-POI-A-019B	1
5.	Scheme for Uninterruptible Power Supply System	0000-999-POI-A-019C	1
6.	Instrumentation/control/power supply cabling diagram	0000-101/102-POI-A-021	3
7.	Instrument Source Connection details	0000-999-POI-A-035	14
8.	Typical GA of Local Instrument Enclosure, purging scheme, DP transmitter	0000-999-POI-A-036	1
9.	Interfacing of actuators	0000-999-POI-A-063	1
10.	Interfacing of field instruments/Electrical interface/PLC Interface	0000-999-POI-A-065	15

(D) ELECTRICAL

(1) Electrical single line diagram for FGD Package : Drg No. 4410-109-POE-J-004

Note : All the above drawings are indicative of Employer's requirements to enable the Bidder to make a suitable offer. All variations/alternations shall be clearly brought out in the technical deviation schedule with implications, if any. Such variations may be acceptable, after assessment of its implication and shall be subjected to the Employer's approval. However, the flexibility of operation and maintenance desired by the schemes and layouts shall be binding.

Electrical drawings (except Electrical single line diagram) are attached with respective Electrical Chapters in Part b, Section VI.

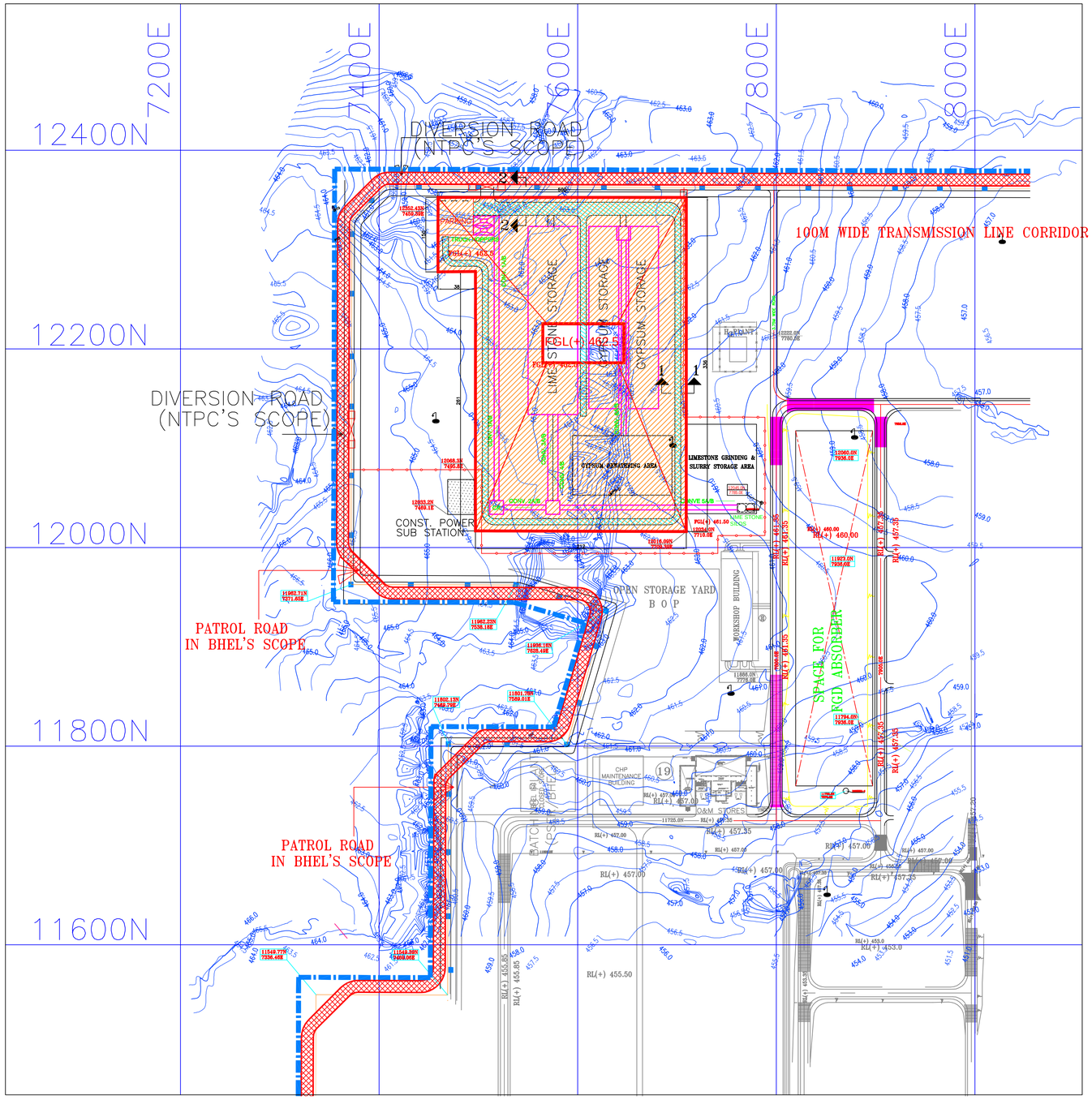

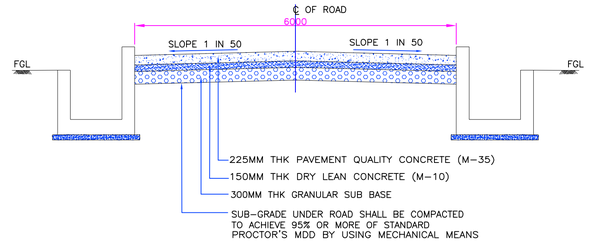

SECTION 1-1

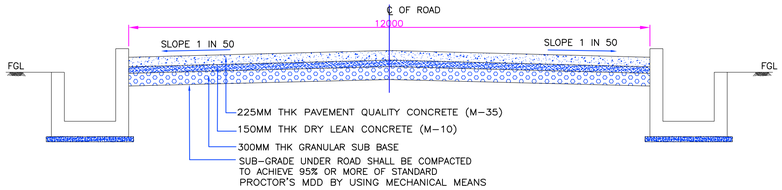

SECTION 2-2

NOTES:

1. ALL DIMENSIONS AND LEVELS ARE IN METRES.
2. CAMBER SHALL BE PROVIDED AT SUBGRADE LEVEL.
3. THE SHOULDERS ON BOTH SIDES OF THE ROAD SHALL BE PROPERLY COMPACTED.
4. ALL CIVIL AND STRUCTURAL WORKS SHALL BE CARRIED OUT IN CONJUNCTION WITH THE CONTRACT TERMS AND CONDITIONS, TECHNICAL SPECIFICATION & SCHEDULE OF ITEMS.
5. THIS DRAWING IS FOR TENDER PURPOSE ONLY AND GIVEN ALL DETAILS ARE TENTATIVE, IT MAY CHANGE IN DETAILED ENGINEERING STAGE.
6. PIPE CULVERT SHALL BE PROVIDED MAINTAINTN THE NATURAL DRAINAGE.

LEGEND:-

1. ROAD IN BIDDER SCOPE . . . . . .
2. ROAD IN OWNER SCOPE . . . . . .
3. FENCING IN BIDDER SCOPE . . . .
4. GATE IN BIDDER SCOPE . . . .
5. SITE LEVELLING IN BIDDER SCOPE . .
6. CONTOUR . . .

FOR TENDER PURPOSE ONLY

एन टी पी सी NTPC

NTPC Limited
(A GOVERNMENT OF INDIA ENTERPRISE)
ENGINEERING DIVISION

PROJECT
NORTH KARANPURA SUPER THERMAL POWER PROJECT
(3X660MW)

TITLE
LAYOUT PLAN OF FGD SYSTEM

REV.NO.	DESCRIPTION	DRAWN	DESIGN	CHKD.	M	E	C	C&I	ES	APPD	DATE
0	FOR TENDER PURPOSE ONLY	MANOJ	SK		–	–		–	–		24.03.17
					CLEARED BY						

SIZE	SCALE	DRG. NO.	REV. NO.
A0	1 : 5000	4410-999-POC-F-001	0

This document is the property of NTPC LIMITED. No part of this document will be reproduced by any means without the written permission.

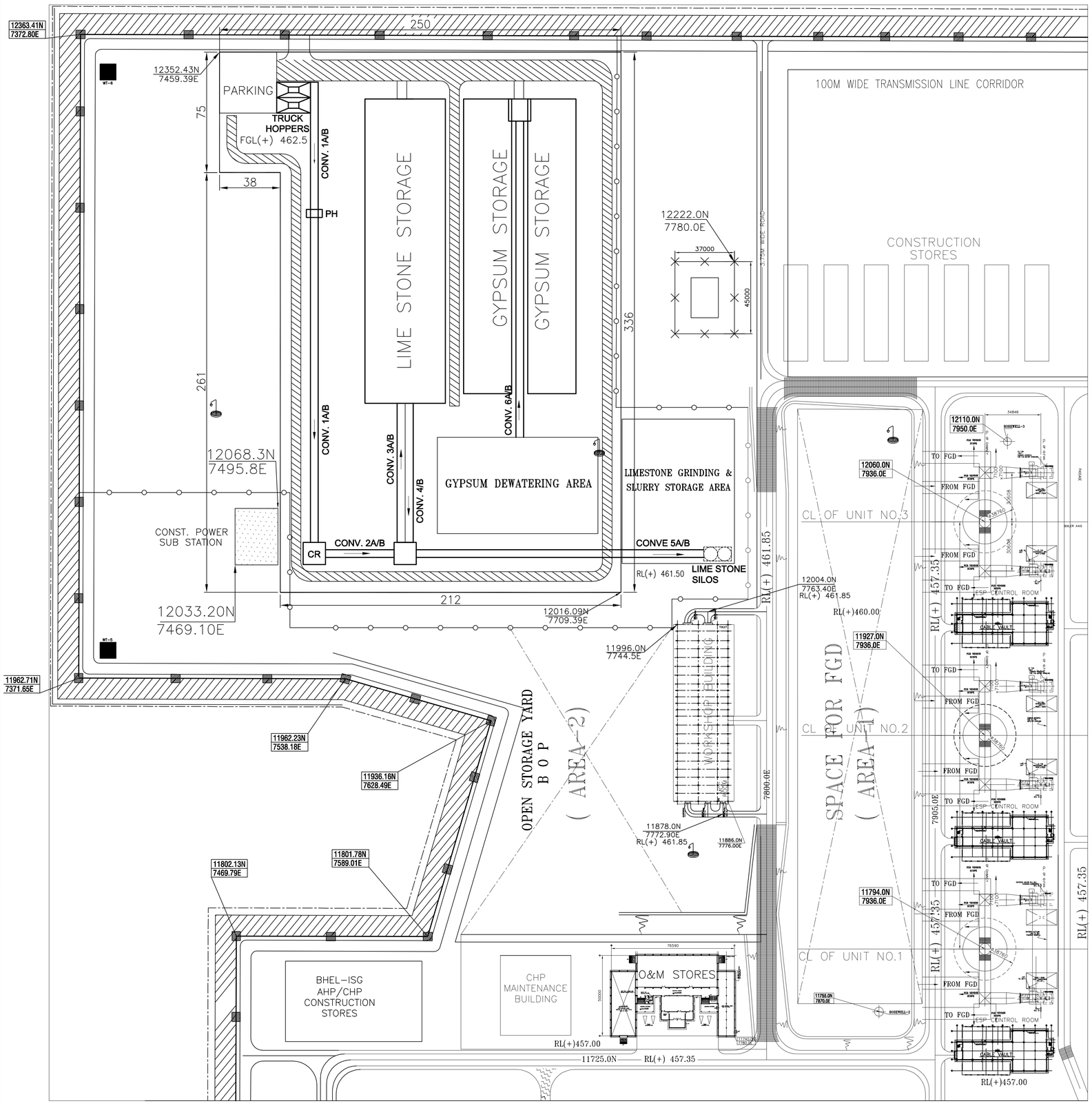

NOTES:-

1. THE LAYOUT OF THE FACILITIES SHOWN HERE IS INDICATIVE ONLY, HOWEVER THE BIDDER MAY OPTIMIZE THE LAYOUT BASED ON THEIR STANDARD PRACTICE.
2. ENTIRE AREA WITHIN THE FGD BLOCK PROPOSED BY THE BIDDER SHALL BE DEVELOPED BY HIM. FGL SHALL BE ACHIEVED BY GRADING OF EXISTING GROUND.BIDDER HAS TO DECIDE THE FINISHED GROUND LEVEL (FGL) OF FGD AREA WITH MINIMUM DISPOSAL OR BORROW EARTH.
3. THE TOPMOST ELEVATION OF WORKSHOP BUILDING IS AT RL(+)473.1M.
4. THE LOCATION OF THE CHIMNEY FOR FGD IS NOT INDICATED IN DRAWING. BIDDER TO LOCATE THE CHIMNEY IN AREA-1 OR AREA-2, MEETING THE SPECIFICATION REQUIREMENT DEFINED ELSEWHERE.

REV.	DESCRIPTION	DRAWN	DESIGN	CHKD.	L/O	W/S	LPP	MH	SG	E	C	APPD	DATE
A.	RELEASED FOR TENDER PURPOSE	Priyanka	AKS	AKS	AK			MK	VS	AK	AT/RB	SM	05.06.17
		CLEARED BY											

एन टी पी सी लिमिटेड
NTPC Limited
(A GOVT. OF INDIA ENTERPRISE)
ENGINEERING DIVISION

PROJECT: NORTH KARANPURA SUPER THERMAL POWER PROJECT (3X660MW)

TITLE: LAYOUT OF FGD AREA

SIZE	SCALE	DRG.NO.	REV.
A1	1:1	4410-999-POM-A-001	A

CAD FILE NAME :

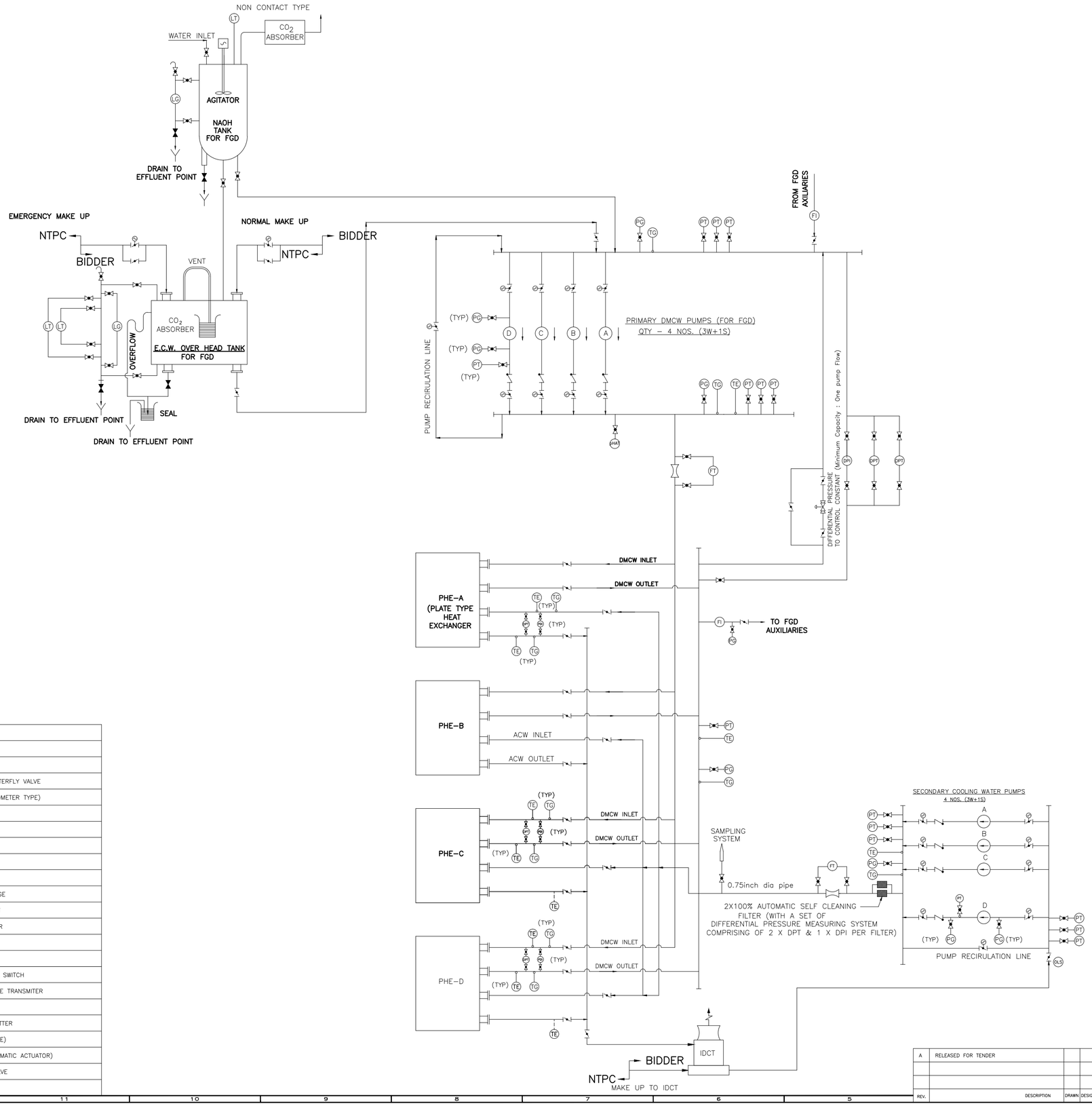

LEGEND :

1.		GLOBE VALVE
2.		NON–RETURN VALVE
3.		BUTTERFLY VALVE
4.		MOTOR OPERATED BUTTERFLY VALVE
5.	FI	FLOW INDICATOR (ROTOMETER TYPE)
6.		FILTER
7.	S	STRAINER
8.		PUMP
9.	PG	PRESSURE GAUGE
10.	TG	TEMPERATURE GAUGE
11.	PDI	DIFFERENTIAL PR. GAUGE
12.	TE	TEMPERATURE ELEMENT
13.	PT	PRESSURE TRANSMITTER
14.	OLS	OPEN LIMIT SWITCH
15.	LT	LEVEL TRANSMITTER
16.	LG / LS	LEVEL GAUGE / LEVEL SWITCH
17.	DPT	DIFFERENTIAL PRESSURE TRANSMITER
18.	pH	pH SENSOR
19.	pHA	pH ANALYSER TRANSMITTER
20.		FLOW ELEMENT (ORIFICE)
21.		CONTROL VALVE (PNEUMATIC ACTUATOR)
22.		NORMALLY CLOSED VALVE
23.	FT	FLOW TRANSMITTER

GENERAL NOTES :

1. ALL DRAIN AND VENT. CONNECTIONS SHALL BE PROVIDED WITH VALVES AT REQUIRED POINTS/LOCATIONS AS PER LAYOUT.
2. pH OF PRIMARY CIRCUIT DM WATER SHALL BE MAINTAINED AROUND 9.5.
3. INSTRUMENTS ARE SHOWN ONLY FOR ONE SET OF PUMP, PHE (PLATE HEAT EXCHANGER) OR ONE HEADER AS THE CASE MAY BE FOR CLARITY AND ARE TYPICAL.THE SAME SHALL BE PROVIDED FOR ALL THE EQUIPMENTS AND HEADERS.
4. ROOT VALVE, ISOLATION VALVES, THREE WAY MANIFOLD ETC. REQUIRED FOR VARIOUS INSTRUMENTS SHALL BE PROVIDED BY BIDDER.
5. EACH HEAT EXCHANGER/COOLER OF VARIOUS AUXILIARIES SHALL BE PROVIDED WITH TEMPERATURE GAUGE AT INLET AND OUTLET BY THE RESPECTIVE BIDDER (COOLER SUPPLIER).FURTHER FLOW GLASS AT INLET SHALL ALSO BE PROVIDED BY COOLER SUPPLIER.
6. WINDING & BEARINGS TEMP MEASUREMENTS OF PUMPS AND MOTORS TO BE PROVIDED AS PER SPECIFICATION.
7. ALL THE INSTRUMENTS SHALL BE IN BIDDER'S SCOPE– MEASURING INSTRUMENTS SHOWN IN TENDER P &ID ARE MINIMUM THAT ARE TO BE PROVIDED BY THE BIDDER. IN CASE ADDITIONAL INSTRUMENTS ARE REQUIRED AS PER STANDARD AND PROVEN PRACTICE OF BIDDER, THE SAME SHALL ALSO BE SUPPLIED WITHIN THIS CONTRACT.

FOR TENDER PURPOSE ONLY

REV.	DESCRIPTION	DRAWN	DESIGN	CHKD.	C	M	E	C&I	APPD	DATE
A	RELEASED FOR TENDER									

CLEARED BY

एन टी पी सी NTPC *NTPC Limited.*
(A GOVT. OF INDIA ENTERPRISE)
ENGINEERING DIVISION

PROJECT: NORTH KARANPURA SUPER THERMAL POWER PROJECT STAGE–I (3 X 660 MW)

TITLE: P&ID DIAGRAM–ECW SYSTEM FOR FGD

SIZE	SCALE	DRG.NO.	REV.
A2	--	4410–000–POM–A–00	0

cad file name : 0000–000–POM–A–00

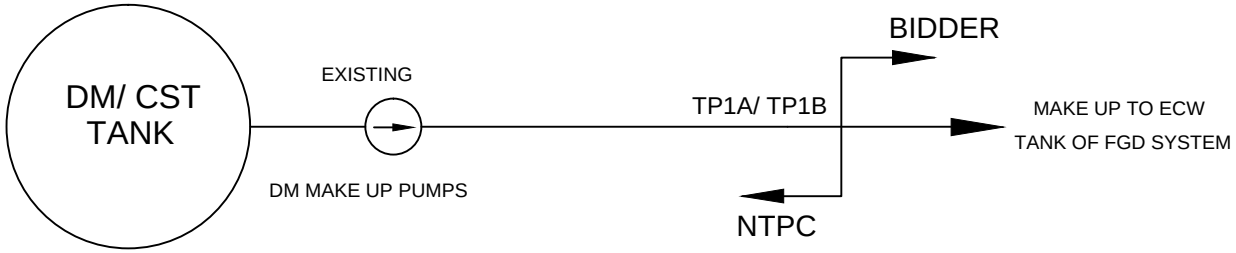

TERMINAL POINT	FLOW(MAX) (cum / hr)	HEAD AT FGL MWC	LOCATION	ADDITIONAL NOTES
TP1A	5	40	AS PER SEC-III PART-A, SEC-VI	NORMAL MAKE UP
TP1B	5	40		EMERGENCY MAKE UP
TP2	30	50		
TP3	450	-		700NB HEADER SUCTION FROM RAW WATER RESERVOIR

NOTES :-

1. PRESSURE & FLOW AS INDICATED
2. BIDDER TO INSTALL BOOSTER PUMPS IF REQUIRED FOR ADDITIONAL PRESSURE AND THE FLOWS INDICATED ARE MAXIMUM

REV.	DESCRIPTION	DRAWN	DESIGN	CHKD.	C	M	E	C&I	APPD	DATE
					CLEARED BY					

एन टी पी सी लिमिटेड
NTPC Limited
(A GOVT. OF INDIA ENTERPRISE)
ENGINEERING DIVISION

PROJECT: NORTH KARANPURA SUPER THERMAL POWER PROJECT
STAGE-I (3 X 660 MW)

TITLE: FGD PLANT WATER SCHEME

SIZE	SCALE	DRG.NO.	REV.
A4		4410-000-POM-A-01	

CAD FILE NAME :

This document is the property of NTPC LIMITED. No part of this document will be reproduced by any means without the written permission.

This document is the property of NTPC LIMITED. No part of this document will be reproduced by any means without the written permission.

OPTION-1

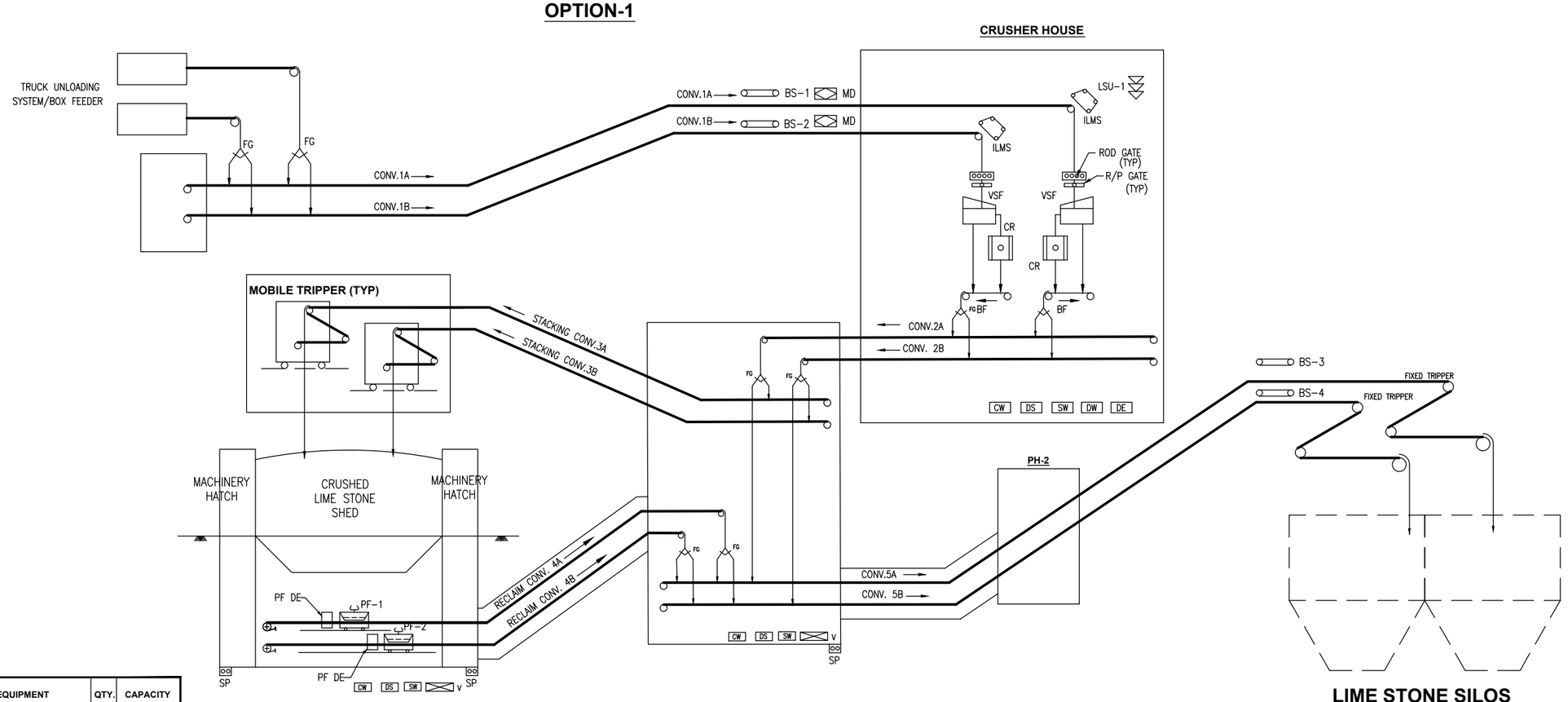

LIME STONE SILOS

EQPT. DESIGN.	EQUIPMENT	QTY.	CAPACITY
ILMS	ALONG WITH TRAMP IRON CHUTE IN LINE MAGNETIC SEPARATOR	2	
BS	BELT WEIGH SCALE	4	
RG	ROD GATE	2	
LIME JH-1	LIME JUNCTION HOUSE WITH CHUTE WORK	1	
FG	FLAP GATE	8	
SM	SUSPENDED MAGNET	2	
MD	METAL DETECTOR	2	
	TRUCK HOPPER COMPLEX	1	
CONV.1A/1B	TROUGHED CONVEYOR 800MM WIDE BELT	2	
CONV.2A/2B	TROUGHED CONVEYOR 800MM WIDE BELT	2	
CONV.3A/3B	TROUGHED CONVEYOR 800MM WIDE BELT	2	
CONV.4A/4B	TROUGHED CONVEYOR 800MM WIDE BELT	2	
CONV.5A/5B	TROUGHED CONVEYOR 800MM WIDE BELT	2	
PH	PENT HOUSE	2	
PF	PEDAL FEEDER	2	
DS	DUST EXTRACTION SYSTEM	LOT	
SW	SERVICE WATER	LOT	
CW	COOLING WATER	LOT	
DW	DRINKING WATER	LOT	
EL	RACK & PINION ELEVATOR	2	EACH 1T CAPACITY

LEGEND	
	BELT CONVEYOR
BS	BELT SCALE
CW	COOLING WATER SYSTEM
DS	DUST SUPRRESSION SYSTEM
SW	SERVICE WATER SYSTEM
DW	DRINKING WATER SYSTEM
FG	FLAP GATE
	EXISTING/NOT IN SCOPE
	ROD GATE
CR	CRUSHER
SM	SUSPENDED MAGNET
LT	LEVEL TRANSMITTER
	VENT FILTER WITH FAN (TYP)

NOTES :

1. THIS DRG. IS MEANT TO SHOW ONLY LIME STONE FLOW PATH AND DOES NOT INDICATE COMPREHENSIVE SCOPE OF WORK.
2. ALL CONVEYORS SHALL BE PROVIDED WITH ACCESSORIES SUCH AS PULL CORD, BELT SWAY AND ZERO SPEED SWITCHES, BELT WIPER UNITS, TENSIONING DEVICES ETC. AS PER TECHNICAL SPECIFICATION. THESE ARE NOT SHOWN IN THE FLOW DIAGRAM FOR CLARITY.
3. ALL ACCESSORIES, ITEMS OF WORK, THOUGH NOT INDICATED BUT REQUIRED TO MAKE THE SYSTEM COMPLETE FOR ITS SAFE, EFFICIENT, RELIABLE AND TROUBLE FREE OPERATION AND MAINTENANCE SHALL ALSO BE INCLUDED IN BIDDER'S SCOPE UNLESS SPECIFICALLY EXCLUDED.
4. DUST SUPPRESSION, SERVICE WATER, POTABLE WATER, COOLING WATER & VENTILATION SHALL BE PROVIDED AS PER TECHNICAL SPECIFICATION REQUIREMENT.
5. LIME STONE STORAGE AND GYPSUM STORAGE AREA WITH FULLY COVERED BY SHED.

FOR TENDER PURPOSE ONLY

REV.	DESCRIPTION	DRAWN	DESIGN	CHKD.	C	M	E	C&I	APPD	DATE
A	RELEASED FOR TENDER	JITENDRA								

CLEARED BY

एन टी पी सी NTPC

NTPC Limited
(A GOVT. OF INDIA ENTERPRISE)
ENGINEERING DIVISION

PROJECT: NORTH KARANPURA SUPER THERMAL POWER PROJECT (3x660MW)

TITLE: LIME STONE HANDLING PLANT
LIME STONE FLOW DIAGRAM

SIZE	SCALE	DRG.NO.	REV.
A2	--	4410-000-2-POM-A-002	A

CAD FILE NAME : 4410-000-2-POM-A-002.dwg

This document is the property of NTPC LIMITED. No part of this document will be reproduced by any means without the written permission.

OPTION-2

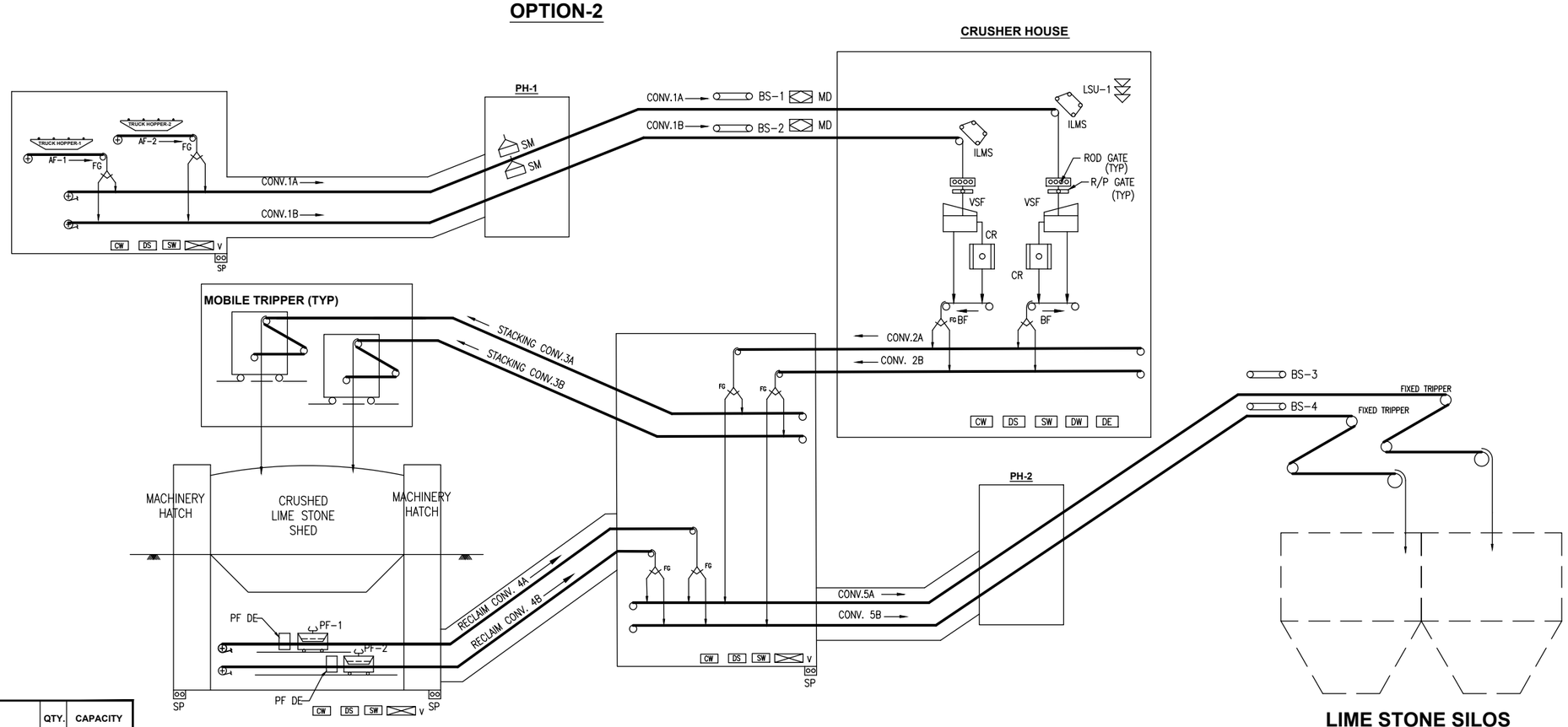

LIME STONE SILOS

EQPT. DESIGN.	EQUIPMENT	QTY.	CAPACITY
ILMS	ALONG WITH TRAMP IRON CHUTE IN LINE MAGNETIC SEPARATOR	2	
BS	BELT WEIGH SCALE	4	
RG	ROD GATE	2	
LIME JH-1	LIME JUNCTION HOUSE WITH CHUTE WORK	1	
FG	FLAP GATE	8	
SM	SUSPENDED MAGNET	2	
MD	METAL DETECTOR	2	
	TRUCK HOPPER COMPLEX	1	
CONV.1A/1B	TROUGHED CONVEYOR 800MM WIDE BELT	2	
CONV.2A/2B	TROUGHED CONVEYOR 800MM WIDE BELT	2	
CONV.3A/3B	TROUGHED CONVEYOR 800MM WIDE BELT	2	
CONV.4A/4B	TROUGHED CONVEYOR 800MM WIDE BELT	2	
CONV.5A/5B	TROUGHED CONVEYOR 800MM WIDE BELT	2	
PH	PENT HOUSE	2	
PF	PEDAL FEEDER	2	
DS	DUST EXTRACTION SYSTEM	LOT	
SW	SERVICE WATER	LOT	
CW	COOLING WATER	LOT	
DW	DRINKING WATER	LOT	
EL	RACK & PINION ELEVATOR	2	EACH 1T CAPACITY

LEGEND	
———	BELT CONVEYOR
BS	BELT SCALE
CW	COOLING WATER SYSTEM
DS	DUST SUPRRESSION SYSTEM
SW	SERVICE WATER SYSTEM
DW	DRINKING WATER SYSTEM
FG	FLAP GATE
– – – –	EXISTING/NOT IN SCOPE
	ROD GATE
CR	CRUSHER
SM	SUSPENDED MAGNET
LT	LEVEL TRANSMITTER
	VENT FILTER WITH FAN (TYP)

NOTES :

1. THIS DRG. IS MEANT TO SHOW ONLY LIME STONE FLOW PATH AND DOES NOT INDICATE COMPREHENSIVE SCOPE OF WORK.
2. ALL CONVEYORS SHALL BE PROVIDED WITH ACCESSORIES SUCH AS PULL CORD, BELT SWAY AND ZERO SPEED SWITCHES, BELT WIPER UNITS, TENSIONING DEVICES ETC. AS PER TECHNICAL SPECIFICATION. THESE ARE NOT SHOWN IN THE FLOW DIAGRAM FOR CLARITY.
3. ALL ACCESSORIES, ITEMS OF WORK, THOUGH NOT INDICATED BUT REQUIRED TO MAKE THE SYSTEM COMPLETE FOR ITS SAFE, EFFICIENT, RELIABLE AND TROUBLE FREE OPERATION AND MAINTENANCE SHALL ALSO BE INCLUDED IN BIDDER'S SCOPE UNLESS SPECIFICALLY EXCLUDED.
4. DUST SUPPRESSION, SERVICE WATER, POTABLE WATER, COOLING WATER & VENTILATION SHALL BE PROVIDED AS PER TECHNICAL SPECIFICATION REQUIREMENT.
5. LIME STONE STORAGE AND GYPSUM STORAGE AREA WITH FULLY COVERED BY SHED.

FOR TENDER PURPOSE ONLY

REV.	DESCRIPTION	DRAWN	DESIGN	CHKD.	C	M	E	C&I	APPD	DATE
					CLEARED BY					
A	RELEASED FOR TENDER	JITENDRA								

एन टी पी सी NTPC

NTPC Limited
(A GOVT. OF INDIA ENTERPRISE)
ENGINEERING DIVISION

PROJECT: NORTH KARANPURA SUPER THERMAL POWER PROJECT (3x660MW)

TITLE: LIME STONE HANDLING PLANT
LIME STONE FLOW DIAGRAM

SIZE	SCALE	DRG.NO.	REV.
A2	– –	4410-000-2-POM-A-002	A

CAD FILE NAME : 4410-000-2-POM-A-002.dwg

This document is the property of NTPC LTD.
No part of this document will be reproduced by any means without written permission.

LEGEND :

	PUMP
	AIR COMPRESSOR
	NON RETURN VALVE
	MANUAL GATE VALVE(OPEN)
	MANUAL GATE VALVE(CLOSED)
	MOTORISED GATE VALVE(OPEN)
	MOTORISED GATE VALVE(CLOSED)
	MOTORISED GATE
	AGITATOR
	PNEUMATIC CONTROL VALVE
	PNEUMATIC OPERATED BI-PLANE DAMPER
	MOTOR OPERATED LOUVER DAMPER
	PNEUMATIC OPERATED LOUVER DAMPER
	PNEUMATIC OPERATED PINCH CONTROL VALVE
	KNIFE GATE/BUTTERFLY VALVE
	FAN
	HEATER
	PNEUMATIC GATE
	PNEUMATIC OPERATED
	MOTORIZED

	PROCESS WATER
	FILTRATE
	CRUSHED LIMESTONE
	GYPSUM SLURRY
	RECIRCULATION SLURRY
	AIR
	GAS
	VACUUM

ID FAN-A

ID FAN-B

FGD SCOPE

CHIMNEY-1

TYPICAL FOR ONE UNIT EXISTING CHIMNEY FOR FGD BY-PASS OPERATION

SEAL AIR SYSTEM

BOOSTER FAN-A

BOOSTER FAN-B

CEMS ANALYZERS

CHIMNEY-1

TYPICAL FOR ONE UNIT SMALL HEIGHT CHIMNEY FOR FGD OPERATION

MIST ELIMINATORS

FROM MIST ELUMINATION WASH WATER PUMPS (FOR CONTINUATION SEE DRG. NO. 4410-109-POM-A-007)

EMERGENCY WATER TANK

SLURRY PIPING & PUMPS FLUSHING SYSTEM

ABSORBER

FROM PROCESS WATER PUMP (FOR CONTINUATION SEE DRG. NO. 4410-109-POM-A-007)

NORMAL QUENCH SYSTEM

FROM FILTRATE WATER PUMP (FOR CONTINUATION SEE DRG. NO. 4410-109-POM-A-007)

SLURRY RECIRCULATION PUMPS

OXIDATION TANK

FROM LIMESTONE SLURRY PUMP (FOR CONTINUATION SEE DRG. NO. 4410-109-POM-A-007)

TO GYPSUM DEWATERING SYSTEM (FOR CONTINUATION SEE DRG. NO. 4410-109-POM-A-007)

GYPSUM BLEED PUMPS (2x100%)

TYPICAL FOR EACH PUMP

TO ABSORBER

DRAINAGE

ABSORBER AREA SUMP

TYPICAL FOR EACH BLOWER/COMPRESSOR

OXIDATION AIR BLOWER/COMPRESSOR

TG	TEMPERATURE GAUGE
TE	TEMPERATURE ELEMENT
PI	PRESSURE INDICATOR
PT	PRESSURE TRANSMITTER
DPT	DIFFERENTIAL PRESSURE TRANSMITTER
DPI	DIFFERENTIAL PRESSURE INDICATOR
FT	FLOE TRANSMITTER
LT	LEVEL TRANSMITTER
AT	ANALYSER INSTRUMENT
VT	VIBRATION TRANSDUCER
DM	DENSITY MONITOR
PH	PH ANALYSER

NOTES

1. THE SCHEME SHALL BE FINALIZED DURING DETAILED ENGINEERING BASED ON SPECIFICATION AND SYSTEM REQUIREMENT.
2. ANY EQUIPMENT / VALVE / PIPE NOT SHOWN IN THE DRAWING BUT REQUIRED FOR COMPLETION OF THE SYSTEM SHALL BE INCLUDED IN THE SCOPE OF THE CONTRACTOR.
3. NUMBER OF AGITATORS / SLURRY SPRAY LEVELS/PUMPS SHALL BE AS PER THE CONTRACTOR'S PROVEN PRACTICE WITH REDUNDANCIES AS STIPULATED IN THE SPECIFICATION.
4. UTILITES LIKE COOLING WATER, SERVICE WATRE, INSTRUMENT AIR, SERVICE AIR, AUXILIARY STEAM SHALL BE PROVIDED TO THE CONTRACTOR AT EMPLOYER'S TERMINAL POINT AS ELABORATED IN SUB-SECTION:IV, PART-A, SECTION-VI OF THE SPECIFICATION. ALL PIPING/SYSTEM FROM THE TERMINAL POINT SHALL BE IN THE CONTRACTOR'S SCOPE.
5. ALL INSTRUMENTS SHALL BE PROVIDED WITH ISOLATION VALVES.
6. ALL INSTRUMENTS IN SLURRY LINES SHALL BE PROVIDED ISOLATION VALVES AND DIAPHRAGM.
7. ALL TEMPERTURE ELEMENTS (TEs) SHALL BE PROVIDED WITH TEMPERATURE TRANSMITERS.
8. ONLY ULTRASONIC/RADAR TYPE LEVEL TRANSMITTER SHALL BE PROVIDED FOR SLURRY TANK/SUMPS.
9. ALL MANUAL PUMP SUCTION VALVES SHALL BE PROVIDED WITH OPEN LIMIT SWITCHES.
10. ALL SLURRY TANKS SHALL BE PROVIDED WITH FIELD INDICATORS FOR LOCAL LEVEL INDICATION AND OTHER TANKS SHALL BE PROVIDED WITH LEVEL GAUGES FOR LOCAL LEVEL INDICATION.
11. PROPER DRAINAGE AND WATER WASHING ARRANGEMENT AS PER CONTRACTOR'S PROVEN PRACTICE SHALL BE PROVIDED.
12. PROVISION FOR FLUSHING OF SLURRY PIPING/VALVES/PUMPS & DRAIN SYSTEM ETC. SHALL BE PROVIDED.
13. IN CASE THE CONTRACTOR OFFERS A CENTRIFUGAL TYPE COMPRESSOR A MOTORIZED VALVE/GATE SHELL BE PPROVIDED AT THE DISCHARGE OF EACH COMPRESSOR.
14. CONTRACTOR SHALL ENSURE THE SIGNALS TO BE EXCHANGED WITH SG/BOP-DDCMIS (IN EMPLOYER'S SCOPE) FOR SAFE AND SATISFACTORY OPERATION OF FGD SYSTEM.
15. * AS PER THE BIDDER'S PROVEN PRACTICE, PNEUMATIC CAN BE PROVIDED.
16. SUPPLY, INSTALLATION AND COMMISSIONING OF INSTRUMENTS REQUIRED FOR FGD SYSTEM SHALL BE IN THE SCOPE OF CONTRACTOR. HOWEVER, MINIMUM INSTRUMENTS INDICATED ON THE DUCT (BEING SUPPLIED BY SG SUPPLIER) SHALL BE SUPPLIED, INSTALLED AND COMMISSIONED BY THE CONTRACTOR UNDER THIS PACKAGE.

FOR TENDER PURPOSE ONLY

NTPC LTD.
(A Government of India Enterprise)
ENGINEERING DIVISION

PROJECT: NORTH KARANPURA SUPER THERMAL POWER PROJECT (3 x 660 MW)

TITLE: SCHEME OF FGD-ABSORBER SYSTEM

REV.NO.	DESCRIPTION	DRAWN	DESIGN	CHKD.	M	E	C	C&I	ARCH	APPD.	DATE
		Priyanka	VS								05.06.17

CLEARED BY

SIZE	SCALE	DRG NO.	REV. NO.
A-1		4410-109-POM-A-005	A

This document is the property of NATIONAL THERMAL POWER CORPORATION LTD.
No part of this document will be reproduced by any means without the written permission.

CRUSHED LIMESTONE FROM LIMESTONE HANDLING PLANT

FROM FILTRATE WATER PUMPS (FOR CONTINUATION SEE DRG. NO. 4410-109-POM-A-007)

FROM MILL-A

FROM MILL-B

LIMESTONE SILO - A **

LIMESTONE SILO - B **

LIMESTONE TO MILL-B

LIMESTONE MILLING SYSTEM

FEEDER-A

MILL HYDROCYCLONE - A

LIMESTONE BALL MILL - A along with LOS

GEAR BOX

MAIN MOTOR

AUXILIARY MOTOR

MILL SEPERATOR TANK

MILL CIRCUIT PUMP (2x100%)

LIMESTONE SLURRY STORAGE TANK

LIMESTONE SLURRY PUMP (3x100%)

TO ABSORBER
REFRE DRG. NO. 4410-109-POM-A-005

TYPICAL FOR ONE LIMESTONE SLURRY STORAGE TANK

SLURRY PIPING & PUMP FLUSHING SYSTEM

4410-10-POM-A-001

4410-109-POM-A-006

DRAINAGE

LIMESTONE GRINDING AREA SUMP

FROM PROCESS WATER PUMPS (FOR CONTINUATION SEE DRG. NO. 4410-109-POM-A-007)

TYPICAL ARRANGEMENT ONE LIMESTONE MILL

NOTES

1. FOR NOTES AND LEGENDS SEE DRAWING NO. 4410-109-POM-A-005.
   LOS-LUBE OIL SYSTEM AS DETAILED IN TECHNICAL SPECIFICATION.
2. FACILITIES SHALL BE PROVIDED FOR UNLODING THE BUNKER THROUGH FEEDER.

** EACH SILO SHALL BE PROVIDED WITH SS LINING IN CONICAL PORTION, LEVEL TRANSMITTERS, AIR CANOS, BAG FILTER SYSTEM, ETC. AS DETAILED IN PART-B, SECTION-IV OF TECHNICAL SPECIFICATIONS.

FOR TENDER PURPOSE ONLY

NTPC LTD.
(A Government of India Enterprise)
ENGINEERING DIVISION

PROJECT: NORTH KARANPURA SUPER THERMAL POWER PROJECT (3 x 660 MW)

TITLE: SCHEME OF FGD MILLING SYSTEM

REV. NO.	DESCRIPTION	DRAWN	DESIGN	CHKD.	CLEARED BY: M	E	C	C&I	ARCH	APPD.	DATE
		Priyanka	VG								23.03.17

SIZE	SCALE	DRG NO.	REV. NO.
A-1		4410-109-POM-A-006	A

This document is the property of NTPC LTD.
No part of this document will be reproduced by any means without written permission.

FROM GYPSUM BLEED PUMP
(REFER DRG. NO. 4410-109-POM-A-005)

To auxiliary Absorbent Tank

TO OTHER
HYDROCYCLONE
/ BELT FILTERS

TO FILTRATE WATER TANK
ALTERNETIVELY TO ABSORBER

PRIMARY
HYDROCYCLONE

SECONDARY HYDROCYCLONE
FEED TANK

SECONDARY
WASTE WATER
HYDROCYCLONE
X2

PROCESS WATER LINE

LIME TANK FOB
NEUTRALISATION

RECIRULATION CUM MIXING

WASTE WATER TANK

CONTRACTOR

NTPC

ASH SPRAY
SYSTEM

NTPC

SEE NOTE-2

VACUUM
BELT
FILTERS

PROCESS WATER

CAKE WASH
WATER TANK

TO GYPSUM
HANDLING SYSTEM

AIR DISCHARGE

VACUUM PUMP
SEAL

VACUUM PUMP

RECEIVER TANK

TO ABSORBERS/LIMESTONE
SLURRY TANK
(REFER DRG. NO.
4410-109-POM-A-005/006)

BOOSTER PUMPS
(2x100%)

LEVEL CONTROL STATION FOR TANK

CONTRACTOR

NTPC

CW
BLOWDOWN

NTPC

SPRAY

Cake wash water

Absorber process needs

To normal flue gas
quenching system

To Limestone slurry
Preparation system

Flushing system header
& other process needs

PROCESS WATER TANK-2

PROCESS WATER PUMPS

WATER

PROCESS WATER TANK-1

To Mist Elimnator
Washing System
(REFER DRG. NO.
4410-109-POM-A-005)

Mist Elimnator Wash Water Pumps

TYPICAL FOR 1x100%

To Absorbent Tank

TO ABSORBENT SLURRY
TANK PUMP (1x100%)

DRAINAGE

LIMESTONE GRINDING AREA SUMP

TYPICAL ARRANGEMENT FOR ONE VACUUM BELT FILTER

TO ABSORBERS/LIMESTONE SLURRY TANK
(REFER DRG. NO. 4410-109-POM-A-005/006)

FILTRATE TANK

FILTRATE WATER PUMPS (2x100%)

BELT FILTER WASH
WATER PUMP

DRAINAGE

GYSPUM DEWATERING AREA SUMP

NOTES

1. FOR NOTES AND LEGEND SEE DRAWING NUMBER 4410-109-POM-A-005.
2. ARRANGEMENT FOR CAKE AND CLOTH WASHING SYSTEM INDICATED IS TYPICAL. CONTRACTOR MAY OFFER AN ALTERNATE SYSTEM AS PER HIS PROVEN PRACTICE.
3. FLUSHING SYSTEM FOR FILTRATE & WASTE WATER SYSTEM IF REQUIRED SHALL BE PROVIDED BY THE CONTRACTOR.
4. LIME STORAGE AND FEEDING SYSTEM IS ALSO TO BE PROVIDED BY THE CONTRACTOR.

FOR TENDER PURPOSE ONLY

REV.NO.	DESCRIPTION	DRAWN	DESIGN	CHKD.	CLEARED BY	APPD.	DATE
		Priyanka	VG		M E C C&I ARCH		23.03.17

एनटीपीसी लिमिटेड
NTPC Limited
(A Government of India Enterprise)
ENGINEERING DIVISION

PROJECT: NORTH KARANPURA SUPER THERMAL POWER PROJECT (3 x 660 MW)

TITLE: SCHEME OF GYPSUM DEWATERING SYSTEM

SIZE	SCALE	DRG NO.	REV. NO.
A-1		4410-109-POM-A-007	A

PRODUCED BY AN AUTODESK EDUCATIONAL PRODUCT

This drawing and the design it covers are the property of NTPC Limited and must not be copied, loaned or exhibited either in part or in whole without written permission. Any contravention is liable for prosecution.

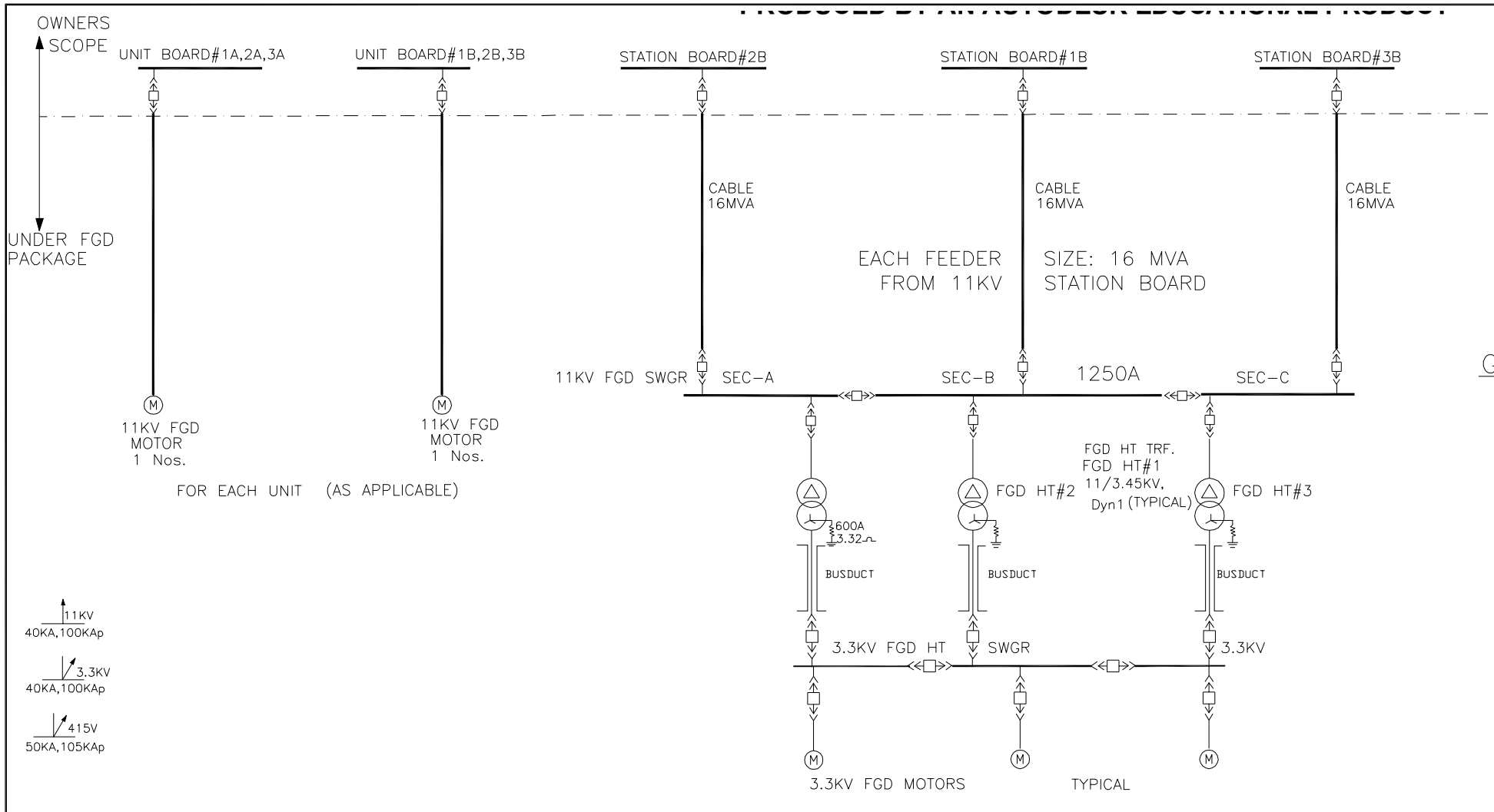

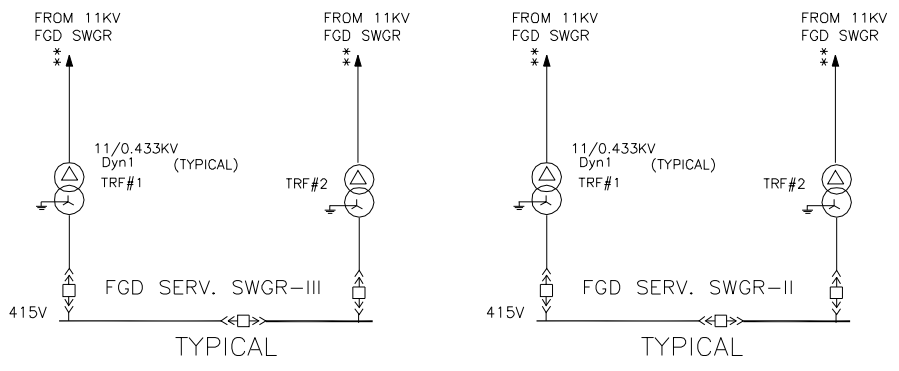

OUTGOING FEEDERS AS PER REQUIREMENT

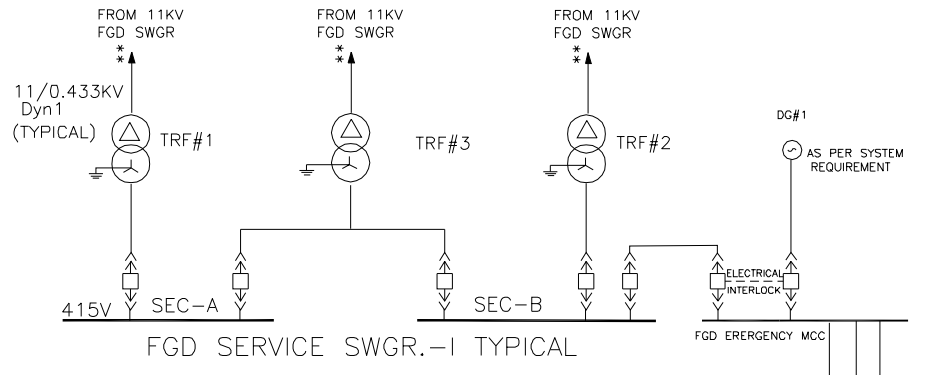

FGD SERVICE SWGR.-I TYPICAL

OUTGOING FEEDERS AS PER REQUIREMENT

✳FEEDRS SHALL BE DISTRIBUTED TO ACHIEVE LOAD BALANCING ON VARIOUS SECTIONS OF 11KV FGD SWGR.

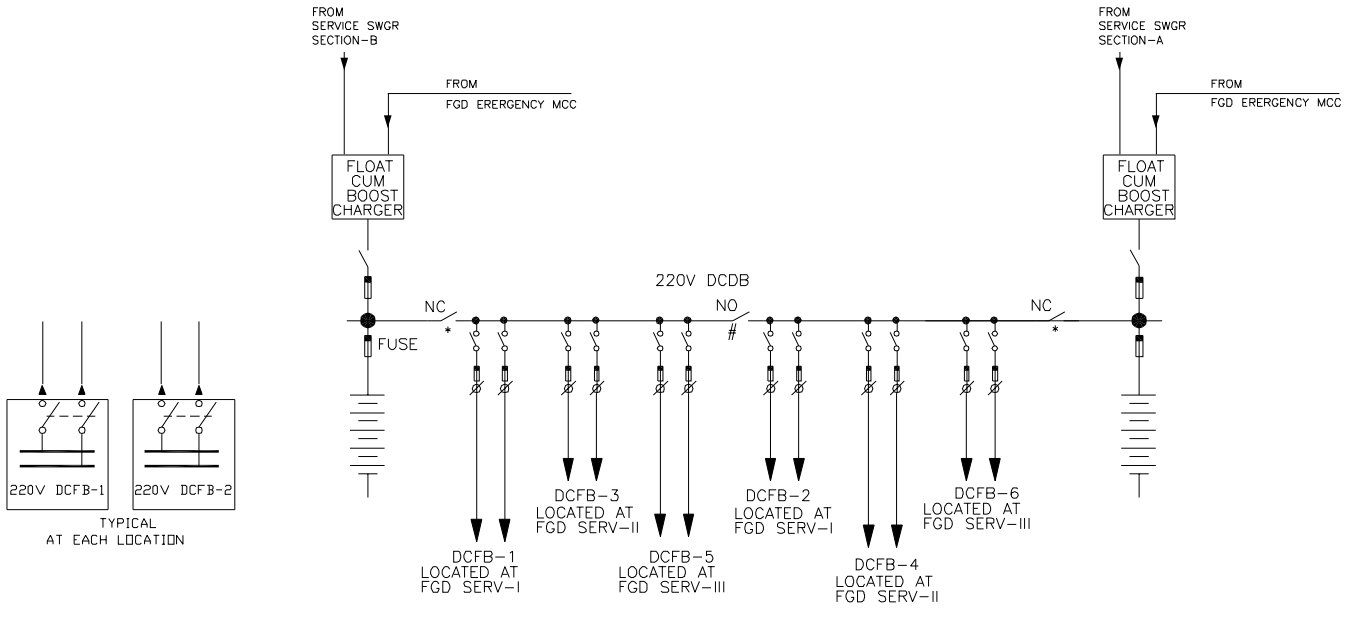

OUTGOING DC FEEDERS AS PER REQUIREMENT

GENERAL NOTES:

1. THE SELECTION OF LT OUTGOING FEEDERS(DRAW OUT TYPE) SHALL BE AS INDICATED HEREUNDER:
   (i) BELOW 100 A – SFU
   (ii) 100 A–400 A – MCCB
   (iii) ABOVE 400 A – BREAKER

2. CONTROL AND PROTECTION SUPPLIES FOR ALL SWITCHGEARS/ DBS/CONTROL PANELS SHALL BE FED FROM TWO DIFFERENT SOURCES/DIFFERENT SECTIONS.

3. STANDARD LT TRANSFORMER RATINGS WITH THEIR IMPEDANCES ARE AS FOLLOWS

SL NO.	TRF RATING	% IMPEDANCE (Tolerance as per IEC)
1.	2.5 MVA	10 %
2.	2.0 MVA	10 %
3.	1.6 MVA	8 %
4.	1.0 MVA	6.25 %
5.	0.63 MVA	5 %

4. WHEREVER MINIMUM RATING OR NO RATING HAS BEEN INDICATED, SIZING SHALL BE CARRIED OUT AS PER SYSTEM REQUIREMENT AND FINAL DRIVE LIST. FINAL FEEDING ARRANGEMENT TO BE DECIDED DURING DETAILED ENGINEERING AS PER SIZING CRITERIA SPECIFIED IN THE TECHNICAL SPECIFICATION.

5. 3x50% FEEDING ARRANGEMENT MAY BE USED FOR 415 VOLTS LOAD CENTERS WHERE THE TOTAL LT LOAD IS MORE THAN 2.15 MVA.

6. NUMBER OF MOTORS/FEEDERS SHOWN IN THE SLD IS TYPICAL AND FEEDING ARRANGEMENT SHOWN AT VARIOUS LOAD CENTERS IS INDICATIVE IN NATURE SHOWING THE FUNCTIONAL REQUIREMENTS.

7. BIDDER SHALL PROVIDE DC SYSTEM OF ADEQUATE CAPACITY FOR MEETING DC LOADS IN FGD AREA.

8. ONE NUMBER DG SET COMMON FOR ENTIRE FGD PLANT SHALL BE PROVIDED BY THE BIDDER FOR MEETING THE EMERGENCY PROCESS LOADS ENVISAGED FOR FGD PLANT.

9. ALL BATTERY CHARGERS SHALL HAVE 2 INPUT SUPPLIES ALONG WITH SUITABLE AUTOMATIC CHANGEOVER BETWEEN THE SOURCES.

FOR TENDER PURPOSE ONLY

एनटीपीसी लिमिटेड
NTPC Limited
(A GOVERNMENT OF INDIA ENTERPRISE)
ENGINEERING DIVISION

PROJECT: NORTH KARANPURA STPP (3 X 660 MW)

TITLE: ELECTRICAL SINGLE LINE DIAGRAM FOR FGD PACKAGE

REV. NO.	DATE	DESCRIPTION	DRAWN	DESIGN	CHKD	APPD

SIZE	SCALE	DRAWING NO.	REV. NO.
A3	NTS	4410-109-POE-J-001	A

PRODUCED BY AN AUTODESK EDUCATIONAL PRODUCT

CLAUSE NO	DESCRIPTION
1.0	**GENERAL**
2.0	**CIVIL WORKS, FOUNDATION, GROUTING**
3.0	**ERECTION WORK**
4.0	**WELDING, HEAT-TREATMENT, RADIOGRAPHY AND NDT**
5.0	**APPLICATION OF INSULATION**
6.0	**PAINTING INCLUDING FINISH PAINTING**
7.0	**TESTING, PRE-COMMISSIONING, COMMISSIONING AND POST-COMMISSIONING**

1.0	GENERAL
1.1	The intent of this specification is to provide services for execution of project according to most modern and proven techniques and codes. The omission of specific reference to any method, equipment or material necessary for the proper and efficient services towards installation of the plant shall not relieve the contractor of the responsibility of providing such services / facilities to complete the work or portion of work awarded to him. The quoted price shall deem to be inclusive of all such contingencies.
1.2	The contractor shall carry out the work in accordance with standard practices / codes /instructions / drawings / documents /specification/manuals supplied by BHEL from time to time.
1.3	The work shall conform to dimensions and tolerances given in various drawings and documents that will be provided during execution. If any portion of work is found to be defective in workmanship, not conforming to drawings or other stipulations, the contractor shall dismantle and redo the work duly replacing the defective materials at his cost failing which the job will be carried out by BHEL by engaging other agencies / departmentally and recoveries will be affected from contractor's bills towards expenditure incurred including BHEL's usual overhead charges.
1.4	Following shall be the responsibility of contractor and have to be provided within finally accepted price.
1.4.1	Provision as required of all types of labour, supervisors, engineers, watch and ward, tools & tackles, calibrated inspection, measuring and test equipment as specified and otherwise required for the work, consumables for erection, testing and commissioning including material handling.
1.4.2	Proper out-turn as per BHEL’s plan and commitment
1.4.3	Completion of work as per BHEL Schedule.
1.4.4	Good quality and accurate workmanship for proper performances of equipment.
1.4.5	Repair and rectification as and when required
1.4.6	Preservation / Re-conservation of all components during storage / erection till handing over.
1.5	Contractor shall execute the work as per sequence and procedure prescribed by BHEL at site. BHEL engineer, depending upon the availability of materials, fronts etc, will decide the sequence of erection and methodology. No claims for extra payment from the contractor will be entertained on the grounds of deviation from the method of erection adopted in erection of similar jobs or for any reason whatsoever.
1.6	All necessary certificates and licenses, permits & clearances required to carry out this work from the respective statutory/ local authorities are to be arranged by the contractor at his cost in time to ensure smooth progress of work.
1.7	The quantities indicated in the tender specification are approximate and are liable for variation and alteration at the discretion of BHEL. The quoted unit rate shall be applicable for any additional product group also, if included at a later date integral to the main scope of work /package envisaged. The work executed shall be measured and priced as per the unit rate arrived at for each work area as mentioned in the relevant clauses
1.8	The terminal points as decided by BHEL shall be final and binding on the contractor
1.9	The work covered under this specification is of highly sophisticated nature requiring the best quality of workmanship, engineering and construction management. The contractor should ensure timely completion of the work. The contractor must have the adequate quantity of tools, construction aids, equipment, etc. in this possession.

	He must also on his rolls adequate trained, qualified and experienced supervisory staff and skilled personnel.
1.10	Contractor has to work in close co-ordination with other erection agency at site. BHEL engineer will co-ordinate area clearance. In a project of such magnitude, it is possible that the area clearance may be less/more at a particular given time. Activities and erection program have to be planned in such a way that the milestone are achieved as per schedule/ plans. Contractor shall arrange & augment the resources accordingly.
1.11	HOUSE KEEPING-The contractor is supposed to carryout housekeeping of the work area on regular basis to keep the work place neat and tidy and available for the SAFE Working. The scrap, generated daily during the Execution activities, is to be dumped at designated area as decided by BHEL/ NTPC on daily basis. The erection materials issued to the contractor and kept near the work area should also be staged properly at site. Compliance report on above shall be submitted by the contractor to BHEL on Daily basis. In case the contractor fails to do so, BHEL have rights to carryout the same from the other party at the Risk and cost of the contractor. The cost applicable with BHEL overheads shall also be recovered from the monthly running bills of contractor
2.0	**CIVIL WORKS, FOUNDATION, GROUTING**
2.1	BHEL shall provide all equipment foundations. For the correctness of these foundations as per drawings, the contractor shall check the dimensions & locations of the foundations, pockets, anchor-bolt pitch. Further, top elevation of foundations shall be checked with respect to benchmark. All minor adjustments of foundation level, dressing and chipping of foundation surfaces up to 50 mm, enlarging the pockets in foundations etc., as may be required for the erection of equipment / plants shall be carried out by the contractor.
2.2	While on the job, care is essential to avoid too much chipping and resultant lowering of level. In case of excess chipping, contractor has to arrange additional packing plates as per requirements provided BHEL Engineer allows it. When required by manufacturers, the embedded sub-sole plates shall be scraped and checked with Prussian blue to get the required contact with frames.
2.3	The contractor shall ensure perfect matching of packer plates including machining, scraping and blue matching with foundation by dressing the foundation, as well as perfect matching between the packer plates and the base plate of equipment to the satisfaction of BHEL Engineer. If required the packer plates may have to aligned and fixed on the foundations using special high strength, non-shrinking and quick-setting grouts. The minimum thickness below the packer plate should be 20 mm.
2.4	Entire grouting work of foundation bolt grouting, base plate grouting, equipment grouting etc. including materials shall be carried out by the civil work agency of BHEL. While grouting will be carried out by other agency, the contractor has to ensure that all the matching joints which are not to be grouted shall be kept free from the grouting mixture by applying tape or any other alternative method approved by Engineer. All assistance required has to be provided by the contractor. If required, decoupling of equipment's has to be done for conducting the verification. In case any disturbance is noticed the cause, if any, shall be removed and re-alignment done as part of work.
2.5	The contractor shall check and verify the alignment of equipment, alignment of shafts of rotating machinery, the slopes of all bearing pedestals, centering of rotors with respect to their sealing bores, couplings etc. as applicable and the like items to ensure that no displacement had taken place during grouting. The values recorded prior to grouting shall be used during post grouting check up and verifications. Such

	pre and post grout records of alignment details shall be maintained by the contractor in a manner acceptable to the Engineer.
3.0	**ERECTION WORK**
3.1	All normal erection and assembly techniques necessary for completion of works under this specification and magnitude have to be carried out. The omission of specific technique /method/process does not absolve the contractor of his responsibility for the particular operation. These would include,
3.1.1	Scaffolding and rigging operations,
3.1.2	Machine / flame / electric cutting, grinding, welding, radiography and stress relieving
3.1.3	Fitting, fettling, filing, straightening, chamfering, chipping, scrapping, reaming, as cleaning, checking, levelling, blue matching, aligning and assembly.
3.1.4	Machining, surface grinding, drilling, doweling, shaping.
3.1.5	Temporary erections for alignment, dismantling of certain equipment for checking, Cleaning , servicing and site fabrication.
3.1.6	Insulation and painting.
3.2	Any fixtures, scaffolding materials, approach ladder, concrete block supports, steel structures required for temporary supporting, pre-assembly or checking, welding, lifting and handling during pre-assembly and erection shall be arranged by contractor at his cost.
3.3	No members of any ladder / structure / platform should be cut without specific approval of BHEL. In case it is necessary to cut, the contractor shall rectify / repair in a manner acceptable to BHEL / customer without any additional cost.
3.4	The contractor shall erect scaffolding / temporary platforms for erection. These should be of adequate capacity and shall never be over loaded. These should be replaced when not found suitable during erection work and dismantled on work completion and removed from work site.
3.5	It shall be the responsibility of the contractor to provide ladders on columns for initial work till such time stairways are completed. For this, the ladder should not be welded on the column and should be pre-fabricated clamping type ladders. No temporary welding on any structural member is permitted except under special circumstances with the approval of BHEL. In case it is absolutely necessary then the contractor shall cut the temporary structure and rectify the column as directed by the engineer.
3.6	The contractor is strictly prohibited in using the FGD/ Auxiliary Components for any temporary supporting or scaffolding works etc. In case of such misuse a sum of determined by Engineer will be recovered from contractor's bills.
3.7	**Below mentioned erection sequence is indicative only and give the general idea to the contractor for absorber erection. :**
1	Marking and packer liner setting
2	Bottom plate installation
3	1st stage casing panel installation
4	Baffle panel installation
5	Scaffolding and Structure up to 17.4 Mtr.
6	2nd stage casing panel installation
7	Scaffolding and Structure up to 20.0 Mtr.
8	3rd stage casing panel installation
9	Inlet duct panel installation
10	Scaffolding and Structure up to 22.2 Mtr.
11	4th stage casing panel installation
12	Scaffolding and Structure up to 25.0 Mtr. and spray pipe installation

13	5th stage casing panel installation
14	Scaffolding and Structure up to 27 Mtr.
15	6th stage casing panel installation
16	Scaffolding and Structure up to 30 Mtr.
17	7th stage casing panel installation
18	Scaffolding and Structure up to 33 Mtr. and remaining structure erection
19	Ceiling panel installation
20	Rubber lining
21	Dismantling of scaffolding up to mist eliminator level
22	Absorber internals (Spray pipe and mist eliminator) installation
23	Dismantling of scaffolding up to spray pipe level
24	Absorber internals (Spray pipe and spray nozzle) installation
25	All scaffolding dismantling
26	Fiber grating installation
27	Agitator installation
3.8	**Casing Panel Installation**
3.8.1	Splices of bottom plates at which casing panel are located shall be cleaned.
3.8.2	Location of casing shall be marked on the foundation. Then, according to the casing panel assembly drawings, the location of vertical splices between plates shall be marked
3.8.3	Temporary assembly of lower stage casing panel shall be done by Tack-weld the guide pieces to the bottom plate at prescribed intervals of inside and outside the circular marking.
3.8.4	Temporary assembly of upper stage casing panel shall be done as per Match marks which have been provided on the inside surface of the lower stage casing panel shall be matched to vertical splice line and assembled.
3.8.5	After that welding of the casing panel to be done. The weld between lower stage casing panel and bottom plate shall be performed in a suitable time after the completion of vertical splice for lower stage casing panel.
3.8.6	Vertical splice shall be welded from side by back step method of 1/3 of wall plate width after the completion of assembly of upper wall plate. After the welding from outside, grinding from inside shall be performed with grinder. Welding of horizontal splices shall alternate across the 1st wall. 2nd wall weld's shall be laid simultaneously.
3.8.7	Spacers used for root gap of welds shall be removed.
3.8.8	Appurtenances such as manholes and nozzles shall be installed after marking on correct locations in accordance with the layout dwgs. The time to install then shall be decided in consideration of site construction progress. The location of large diameter nozzles which will be connected to rubber lined pipes shall be determined in accordance with the final piping locations which shall be set at the site.
3.9	Spray Pipe Installation
3.9.1	Check all concerned absorber dimensions, ie. tolerance of absorber casing, support beam location, absorber nozzle location, flange face location, bolt hole location, size and spacing etc., before Spray Pipe installation.
3.9.2	Install the temporary support on absorber nozzles for inserting Spray Pipe into absorber. The temporary support shall be installed at almost the same height of bottom of Spray Pipe • Lift Spray Pipe up to the same height as absorber nozzle.

	• Insert the tip of Spray Pipe into the absorber, and unload the tip of Spray Pipe onto the temporary support. • Insert Spray Pipe into the absorber by using of chain block. • Insert bolt to Spray Pipe flange and Spray Pipe saddle, and tighten as temporary. Then check the horizontal level and insert shim plate to adjust the horizontal level. The level tolerance should be referred to specific drawing. • Tighten all the bolts and nuts. In case of dissimilar material between Spray Pipe flange (especially FRP made) and absorber flange, bolt tightening procedure should be strictly complied with the specific drawings in order to prevent the crack on the flanges. • Loosen the saddle setting bolts and nuts by half rotation to allow the Spray Pipe thermal expansion, and then lock the nuts by double nuts fixing.
3.10	Spray Nozzle
3.10.1	Modify the scaffolding for installation of Spray Nozzle. Set the Spray Nozzle on the Spray Pipe flange, and tighten the bolts and nuts up to about 75% of full torque by using of torque wrench. Check the horizontal level of Spray Nozzle face within the tolerance which is specified in the drawings, and tighten up to full torque. This level is most important for FGD performance. The special care shall be taken to SiC made Spray Nozzle, since these are weak against mechanical shock and impact.
3.11	Mist Eliminator Installation
3.11.1	Check all concerned absorber dimensions, ie. tolerance of absorber casing, support beam location, bolt hole location, size and spacing etc., before installation of Mist Eliminator. Insert the lower washing spray pipe into the absorber. In order to protect the FRP made pipe, do not slide the pipe on the support. Insert the dedicated shim plates between pipe and pipe support, and fixing Ubands or U-bolts and external flanges. Install the lower panel of Mist Eliminator and tightly coupled each other by means of comb brace and tie insulock. Install the lower down washing spray pipe and upper up washing spray pipe as same manner as the above. Install the upper panel of Mist Eliminator, and install upper washing spray pipe as same manner as the above. After installation of Mist Eliminator, to protect the panels by means of load spreaders e.g. wooden planks to allow walking on them during further stage of installation.
3.12	Certain adjustment in length may be necessary while erecting pipelines / ducts /

	casings etc. The contractor should remove the extra lengths / add extra lengths to suit the final layout after preparing edges afresh by adopting specified heat treatment procedures.
3.13	Suspensions for ducting will be supplied in running lengths, which shall be cut to size and adjusted as required. Ducts / expansion bellows are dispatched to site in loose walls plates / pieces and these are to be assembled and welded at site along with stiffeners etc., before erection within the finally accepted rates. All joints connecting duct expansion piece and dampers shall be seal welded on inside as well as on outside.
3.14	Mechanical erection works associated with the power cylinders, valves, valve actuators etc., coming under various groups shall be provided by contractor within the finally accepted rates. The Erection, testing and commissioning of all electrically operated valves, actuators and dampers is covered within the scope of this specification.
3.15	The contractor shall carry out trial run of all motors including checking the direction of rotation in the uncoupled condition. Checking of alignment and recoupling of the motor to the driven equipment as per instructions of BHEL engineer and to their satisfaction. All electrical motors have to be tested for IR & PI values prior to the trial run. Where required, dry out may have to be carried out by using external heating source. Contractor shall make all arrangements in this regard and complete the work as instructed. Vendor shall all necessary MMDs including the motorized insulation testers for the above test.
3.16	The contractor shall fabricate pipe, special bends etc., threading and welding as required for installing lube oil system and carry out the acid cleaning of the fabricated piping. The contractor shall also service the lube oil system, carrying out the hydraulic test of oil coolers etc.
3.17	Contractor shall carry out kerosene testing of all bearing housings of various rotating equipment like pumps, fans etc., as per BHEL engineer's instructions. Performance of hydro test of oil coolers of rotating machines and hydro test of other equipment as per BHEL engineer's instructions is included in the scope of work. Forced lube oil system of motors or rotating equipment form parts of the work under this specification.
3.18	Certain rotating machinery after initial runs and commissioning of the equipment have to be hot aligned as per the instructions of BHEL engineer. Cleaning fans, ducting etc., free of extraneous steel, scaffolding materials electrodes, all foreign materials etc., before trial run of rotating machinery, and at various stages of pre-commissioning activities as per BHEL engineer's instruction, is within the scope of work.
3.19	Some of the rotating equipment and electrical motors are provided with protective greases only. Contractor shall arrange for cleaning of the same with kerosene or some other reagent. If necessary, dismantling some of the parts of the equipment would be necessary. He shall arrange for re-greasing / lubricating them with recommended lubricants and for assembling back the dismantled parts, at quoted rate. Lubricants will, however, be supplied free of cost by BHEL.
3.20	After initial trial of rotating equipment, control and power cabling for motors and other equipment / instrumentation shall have to be disconnected for checking alignment and re-setting / re-alignment / hot alignment. Contractor shall have to arrange for disconnecting control and power cabling as per BHEL engineer's instructions and clearance and reconnect the control and power cabling after realignment. Quoted tonnage rate shall be inclusive of the above.
3.21	Packer plates supplied may have to be machined to the correct dimensions. It may

	also be necessary to blue match the same with each other/ with equipment / with foundations as per BHEL instructions
3.22	Contractor shall arrange changing of preservative oil in the gearboxes, journal and other bearing assemblies of rotating equipment when in storage areas or after erection of equipment as the case may be as per the instructions of BHEL engineer. Necessary lubricants / oil will be supplied by BHEL and the same will be drawn by contractor from BHEL / customer's stores and transporting to site. No additional payment will be made for such works even though supply of lube oil might have been made under regular dispatch-able unit (DU) number against product group main assembly (PGMA) and appearing in the shipping list. Prior to the commissioning of the equipment, oil should be drained and collected in drums provided by BHEL and returned to BHEL / customer's stores.
3.23	The fans, mills and other rotating machines shall be checked for clearances and other vital tolerances. Necessary assistance for balancing of equipment during trial run, if required, shall be provided by the contractor free of cost.
3.24	Whenever required the contractor shall arrange for pre-qualification of process task performers.
3.25	Ducts/ expansion bellows (metallic & non-metallic) are normally supplied in loose wall plates/ segments and these are to be assembled and welded at site before erection. Correction of ovalities/ distortion of ducts, expansion bellows etc occurred during transportation/ handling are to be carried before erection as part of work. Erection of mechanical components of non-metallic joints is included in the scope of work. All joints connecting ducts, expansion pieces and dampers shall be seal welded. These welds have to be made leak proof and tested as per technical instruction / requirement.
3.26	Non specified jobs at the interface / terminal points like bolting welding, gasket changing etc. have to be done by the contractor within the quoted price.
3.27	Instrument tapping coming on the FGD and associated equipment's to be welded/fitted by the contractor with in the quoted price
3.28	The terminal points decided by BHEL should be final and binding on the contractor for deciding the scope of work and effecting payment for the work done.
3.29	Actuators / drives of dampers, gates, powered vanes etc. may have to be serviced, lubricated, before erection, during pre-commissioning & commissioning, including carrying out minor adjustments required as incidental to the work.
3.30	All rotating machines and equipment shall be cleaned, lubricated, checked for their smooth rotation, if necessary by dismantling and refitting before erection. If, in the opinion of Engineer, the equipment is to be checked for clearance, tolerance at any stage of work or during commissioning period, all such works are to be carried out by contractor at his cost.
3.31	All the shafts of rotating equipment shall be properly aligned to those of the matching equipment within design tolerances All bearings, shafts and other rotating parts shall be thoroughly cleaned and suitably lubricated before starting.
3.32	All the motors and equipment shall be suitably doweled after alignment of shafts with taper / parallel machined dowels as per the direction of the Engineer. Dowel pins required are be machined by the contractor at his own cost. However the materials for dowel pins shall be issued by BHEL free of cost.
3.33	The HT motor bearings shall be blue matched at site and checked for bearing clearances. The contractor if required shall carry out scraping of bearing housing. No extra claim for blue matching up to 1mm initial gap will be entertained.
3.34	The contractor at no extra cost to BHEL shall carry out servicing and realignment

	of skid mounted equipment.
3.35	Certain instruments like pressure gauges, pressure transmitters, temperature gauges, flow switches and indicators, etc., are received in assembled condition as integral part of equipment. Contractor shall be responsible for safe receipt, installation and custody of these instruments supplied mounted on skids / equipment. The calibration of skid / equipment mounted instruments shall be arranged by BHEL through other agency engaged for C&I. Contractor will be informed by BHEL engineer about the details of C&I agency. The contractor shall coordinate with the C&I agency for removal, calibration and re-installation of the instruments. Though C&I agency will remove and reinstall the instruments after calibration, the contractor for this package will maintain the list of all the instruments removed & reinstalled. Instruments prior to removal and after reinstallation shall be considered in custody of the contractor for this package.
3.36	All electrical panels, control gears, motors and such other devices shall be properly dried by heating to improve IR valve, before they are energized. Bearings, slip rings commutators and other exposed parts shall be protected against moisture ingress and corrosion during storage and periodically inspected.
3.37	The contractor shall completely erect and test all the piping systems, covered in the specification including sampling lines up to and including sample coolers, hangers & supports, valves and accessories in accordance with the drawings furnished. This includes all necessary bolting, welding, pre-heating, stress relieving, testing, cleaning and painting. System shall be demonstrated in condition to operate continuously in a manner acceptable to the Engineer. Welding shall be used throughout for joining pipes except where flanged, screwed or other type joints are specified or sown on the drawings. All piping shall be erected true to the lines and elevation as indicated in the drawings.
3.38	Pipes sent in standard length shall be cut to suit the site conditions and the layouts. Tubes or pipes wherever deemed to be convenient will be sent in running lengths with sufficient bends. Bends upto 65-mm nominal bore will have to be fabricated at site. Only cold cutting methods are to be employed for cutting of pipes and tubes irrespective of the size and material. Gas Cutting , if any ,will be allowed only in CS LP piping
3.39	The contractor shall ensure lowering of pipes in position with adequate precautions as to avoid any damage to either material or men. Only the anchoring points earmarked for the purpose of lowering the pipes are to be used.
3.40	It is possible that a few flanges may not be matching. The contractor shall be required to cut and re-weld the same as and when required without any additional cost.
3.41	Wherever piping erected by the contractor is connected to equipment / piping erected by the other agencies the joint at the connecting point shall be the responsibility of the contractor who is erecting the piping under this specifications.
3.42	Normally the high-pressure valves will have prepared edges for welding. But, if it becomes necessary, the contractor will prepare new edges or recondition the edges by grinding or chamfering to match the corresponding tubes and pipes within the scope of the work.
3.43	All fittings like `T'-pieces, weld neck flanges, reducers etc., shall be suitably

	matched with pipes for welding. The valves will have to be checked, cleaned or overhauled in full or in part before erection and during commissioning.
3.44	The contractor shall be responsible for correct orientation of all valves so that seats, stems and hand wheels will be in desired location. It is the responsibility of the contractor to obtain the information regarding orientation of valves not fully located on drawings before the same are installed.
3.45	Suspension for piping, etc., will be supplied in running lengths, which shall be cut to suitable sizes and adjusted as required
3.46	The adjustment of all hangers & supports erected in both cold & hot conditions for maintaining the proper slopes towards the drain pots and application of cold pull in the piping wherever required is also included in the scope of the contractor.
3.47	Spring suspensions / constant load hangers have to be pre-assembled for required load and erection carried out as per instructions of BHEL. Any adjustments, removal of temporary arrests / locks etc., have to be carried out as and when required.
3.48	Contractor shall install piping in such a way that no excessive or destructive expansion forces exists in either the cold condition or under conditions of maximum temperature and pressure. All bends, expansion joints and any other special fittings necessary to take care of proper expansion shall be incorporated as per the advice of Engineer. During installation of expansion joints, anchors, care must be taken to see that full design movement is available at all times from maximum and minimum temperature.
3.49	The hanger assemblies shall not be used for attachment of rigging to hoist the pipes into position. Other means shall be used to securely hold the pipe in position till pipe supports are completely assembled and attached to the pipe and building structure.
3.50	Layout of small-bore piping, oil systems etc. as required shall be done as per site requirement. Necessary sketch for routing these lines should be got approved from BHEL by the contractor. There is a possibility of slight change in routing the above pipelines even after completion of erection or from aesthetic point of view. Contractor at no extra cost should carry this out. As built drawing is to be submitted by the contractor after erection completion.
3.51	All the valves, including motorized valves, flap valves, dampers, actuators, etc. shall be serviced and lubricated to the satisfaction of Engineer before erecting the same and during pre-commissioning also. Welding or jointing of extension spindle for valves to suit the site conditions and operational facility shall be part of erection work within the quoted rates.
3.52	Erection and welding of necessary instrumentation tapping points, thermocouple pads, thermo-wells, valves, battery of first root valves, condensing vessels, flow nozzles and control valves to be provided on, auxiliaries and pipe lines are covered within the scope of this specification. This will be the responsibility of the contractor and will be done as per the instructions of BHEL Engineer. The welding of all the above items will be contractor's responsibility even if the: **a**. Product groups, under which these items are released, are not covered in the scope of this tender. **b**. Items are supplied by any agency other than BHEL.
3.53	The contractor shall carry out the tightening of the field bolts on the equipment and piping covered under this specification by using either the calibrated torque

	wrench method or the turn of part method. The methods used the tools and the equipment deployed shall be subject to the approval of Engineer. The competent technicians shall carry out the bolting work.
3.54	The contractor shall prepare as built piping drawing & submit to BHEL Engineer for approval & verification of material used.
3.55	Plate Type Heat exchangers will be supplied for cooling of Auxiliary Cooling water lines. Vendor scope covers erection of these PHEs as per the instruction of BHEL engineers.
3.56	Contractor has to make canopies for motors, actuators, lub oil units, control valves etc. Material for this will be supplied in random lengths / sizes. No separate payment for fabrication is envisaged. Only the erection tonnage rate applicable for Misc eqpt. / structure steel item no. 3 of rate schedule will be paid for this work.
3.57	BHEL will provide free of cost only the shims and packer plates (either machined or plain) which go as permanent part of the equipment. Certain packer plates and shims over and above the quantity received as a part of supplies from manufacturing units of BHEL, will have to be cut out from steel plates / steel sheets at site to meet site requirement. Contractor shall cut and prepare packers and shims by gas cutting/chiseling / grinding/machining and de-burr the same. However, machining of the packers wherever necessary shall be arranged by the contractor.
3.58	All lifting tackles including wire-ropes slings, shackles, used by the contractor, shall be got approved by BHEL Engineer. It will be the responsibility of the contractor to ensure safe lifting of the equipment taking due precautions to avoid any accidents and damages to equipment and personnel. Calibration/fitness testing certificates from recognized agency are to be submitted to BHEL site office for equipment/instrument/appliances to be used, as per requirement of BHEL/ISO system. Expenditure on such works forms a part of the scope of work.
3.59	The contractor shall erect scaffoldings/Temporary platforms supports etc required during erection before the permanent supports are erected. These should be of adequate capacity and shall never be overloaded. These should be replaced when not found suitable during erection work. All structure materials required for the above shall be arranged by the contractor at his own cost. No such material shall be supplied by BHEL in any case. Welding of temporary supports, cleats etc on the columns shall be avoided. In case of absolute necessity, contractor shall take prior approval from BHEL Engineer. Further, any cutting or alteration of member of the structure or platform or other equipment shall not be done without specific prior approval of BHEL Engineer.
3.60	Tanks shall be supplied by the units in more than one segment (rolled sections) having height of segment approx. 2500 mm. Contractor have to complete the assembly at site with necessary welding/NDT/testing as per the approved FQP. Rubber lining of the tanks shall be in the scope of the rubber lining vendor.
3.61	Lime stone silos shall be supplied by the units in more than one segment (3 to 4 segment) and height of segment shall be 2500 mm. Contractor shall have to complete the assembly, final welding,/NDT/testing as per the approved drawings/ documents/ FQP.
4.0	**WELDING, HEAT-TREATMENT, RADIOGRAPHY AND NDT**

4.1	The pressure parts, equipment and piping shall be erected in conformity with the provisions of Indian Boiler Regulation and as may be directed by BHEL as per any standard / specification in practice in BHEL. The method of welding (arc, gas, TIG or other method) may be indicated in the detailed drawings / schedules. BHEL Engineer will have the option of changing the method of welding as per site requirements.
4.2	Welding of pressure parts, equipment, piping, high tensile structural steel shall be done by certified high pressure welders who possess valid certificate of CIB of the State in which the equipment is erected as per provision of IBR.(if applicable) The H.P. welder who possesses necessary certificate shall ensure re-validation as per relevant provisions of IBR and keep the certificate valid till the completion of work. The services of such welders, the validity of whose certificates have expired shall not be utilized for high-pressure works.
4.3	All welders including tack welders, structural and high pressure welder shall be tested as per ASME section IX / IBR and approved by BHEL Engineer before they are actually engaged on work even though they may possess a valid IBR certificate. BHEL reserves the right to reject any welder if the welder's performance is not found to be satisfactory. The contractor shall maintain the records of qualification of welders. BHEL Engineer will issue all the welders qualified for the work, an identity card. The welder will keep the same with him at work place at all times. He may be stopped from work if he is not found in possession of the same.
4.4	Engineer may stop any welder from the work if his performance is unsatisfactory for any reason or if there is a high percentage of rejection in the joints welded by him. The welder having passed qualification tests does not absolve the contractor of contractual obligation to continuously check the welder's performance.
4.5	Faulty welds caused by the poor workmanship shall be cut and re-welded at the contractor’s expense. The Engineer, prior to any repair being made, shall approve the procedure for the repair of defective welds. After the repair has been carried out, the compliance shall be submitted to the engineer.
4.6	The contractor shall carry out the root run welding of all HP / LP piping, valves by TIG welding method only. The contractor shall have to carry out full TIG welding of butt weld joints of tubes / pipes of lesser thickness if required. During the root runs of stainless steel joints, the contractor shall before and during welding have to purge the pipes with inert gas. All arrangements required for the above shall be the responsibility of the contractor at no additional cost.
4.7	All expenses for testing of contractor's welders including destructive and nondestructive tests conducted by BHEL at site or at laboratory shall have to be borne by the contractor only. Limited quantity of raw material required for making test pieces will be supplied by BHEL free of cost.
4.8	The regulators used on welding machines shall be calibrated before putting these into use for work. The Contractor at his cost shall also arrange periodic calibration for the same.
4.9	Only BHEL/ CUSTOMER approved electrodes and filler wire are to be arranged and used by the contractor, within the finally quoted price. BHEL/ NTPC reserve the right to test from the certified lab of approved electrode being used by the contractor. Testing charges for the same shall be borne by the contractor**.** All electrodes shall be baked and dried in the electric electrode-drying oven to the required temperature for the period specified by the Engineer before these are used in erection work. All welders shall have electrodes drying portable oven at the work spot. The electrodes brought to the site will have valid manufacturing test certificate. The test certificate should have a co-relation with the lot number/ batch number

	given on electrode packets. No electrodes will be used in the absence of above requirement. The thermostat and thermometer of electrode drying oven will be also calibrated and test certificate from Govt. approved/ accredited test house traceable to National/ International standards will be submitted to BHEL before putting the oven in use. The contractor shall also arrange periodical calibration for the same.
4.10	All butt / fillet welds shall be subject to dye penetration test as per the instructions of the engineer at no additional cost.
4.11	The contractor shall maintain a record in the form as prescribed by BHEL of all operations carried out on each weld. He has to maintain a record indicating the number of welds, the names of welders who welded the same, date and time of start and completion, preheat temperature, radiographic results, rejection if any, percentage of rejection etc. and submit copies of the same to the BHEL Engineer as required. Interpretation of the BHEL Engineer regarding acceptability or other wise of the welds shall be final.
4.12	The contractor shall carry out the edge preparation of weld joints at site in accordance with the details acceptable to BHEL Engineer. Wherever possible machining or automatic flame cutting should be done. Gas cutting will be allowed only wherever edge preparation otherwise is impractical. All slag / burrs shall be removed from the edge and all the hand cuts shall be ground smooth to the satisfaction of engineer.
4.13	All welds shall be painted with anticorrosive red oxide paint once radiography and stress reliving works are over. Necessary consumables and scaffolding etc including paints shall be provided by contractor at his own cost.
4.14	Pre-heating, radiography and other NDT tests, post heating and stress relieving after welding of tubes, pipes, including attachment welding wherever necessary, are part of erection work and shall be carried out by the contractor in accordance with the instructions of the Engineer. Contractor at his cost shall arrange all equipment and consumables essential for carrying out the above process
4.15	Contractor shall arrange all necessary stress relieving equipment with automatic recording devices. The contractor arrange for labour heating elements, thermocouples, thermo-chalks, temperature recorders, thermocouple attachment units, graphs, sheets insulating materials like asbestos cloth, ceramic beads, asbestos ropes etc. required for heat treatment/ stress relieving operations. The contractor should take a note of the following,
4.15.1	• Temperature shall be measured by thermocouple and recorded on a continuous printing type recorder. All the recorded graphs for heat treatment works shall be the property of BHEL.
4.15.2	• All stress relieving equipment will be used after due calibration and submission of test certificate to BHEL. Periodic calibration from Govt. Approved / accredited Test Houses traceable to National / International standards will also be arranged by the contractor for such equipment at his cost.
4.16	The contractor shall obtain the signature of Engineer or his representative on the strip chart of the recorder prior to the starting of SR operations.
4.17	The contractor shall also be equipped for carrying out other NDT like LPI / MPI/UT / Hardness test etc. as required as per welding schedules / drawings within the finally accepted price / rates. For UT machine shall be used of recordable type.
4.18	The technical particulars, specification and other general details for radiography work shall be in accordance with ASME, IBR or ISO as specified by BHEL.
4.19	Contractor for radiography work shall use iridium-192. The geometric un-sharpness shall not exceed 1.5 mm. The contractor should take adequate safety precautions

	while carrying out radiography. Contractor at his cost shall arrange necessary safe guards required for radiography (including personnel from BARC).
4.20	Low speed high contrasts, fine grain films (D-7 or equivalent) in 10 cm width only be used for weld joint radiography. Film density shall be between 1.5 to 2.0.
4.21	All radiographs shall be free from mechanical, chemical or process marks, to the extent they should not confuse the radiographic image and defect finding. Penetrameter as per ASME or ISO must be used for each exposure
4.22	Lead numbers and letters are to be used (generally 6mm size) for identification of radiographs. Contract number, joint identification, source used, welder's identification and SFD are to be noted down on paper cover of radiograph.
4.23	Lead intensifying screens for front and back of the film should be used as per the above referred ASME specification.
4.24	The joint is to be marked with permanent mark A, B, C to identify the segments. For this a low stress stamp shall be used to stamp the pipe on the down streamside of the weld.
4.25	For multiple exposures on pipes, an overlap of about 25-mm of film should be provided
4.26	Radiography personnel with sufficient experience and certified by M/s BARC for conducting radiographic tests in accordance with safety rules laid down by Division of Radiological protection only have to be deployed. These personnel should also be registered with DRP / BARC for film badge service.
4.27	All arrangements for carrying out radiography work including dark room and air conditioner and other accessories shall be provided by contractor within the space allotted for office at his cost. As an alternative the contractor may deploy an agency having all above facilities and who are duly approved / accredited by BARC and / or other Regulatory authorities. Detailed particulars of such agencies will be submitted and got approved by BHEL Engineer before the actual deployment of agency for radiography work.
4.28	The contractor shall have a dark room fully equipped with radiography equipment, film (un-exposed), chemicals and any other dark room accessories.
4.29	Radiography inspection of welds shall be performed in accordance with requirements and recommendation of BHEL Engineer. The quantum of radiographic inspection shall be as per provision of ASME / BHEL/NTPC approved documents. Subsequently radiographic inspection will be done on the basis of quality of welding. However minimum percentage of joints to be radiographed shall not be less than the requirement of BHEL welding schedule / IBR / Customer's requirements. The percentage may be increased depending upon the quality of joints and at the discretion of BHEL. Radiography on LP piping joints is not envisaged. However other NDT test as called for in the FQP including LPI, MPI and HT will have to be carried out
4.30	All the Radiographs shall be properly preserved and shall become the property of BHEL. They are to be reconciled with the work done, joints radiographed and submitted to BHEL / customer.
4.31	Since radioisotopes are being used, all precautions and safety rules as prescribed by BHEL/BARC/ Customer shall be strictly followed. BARC / DRP certificate to be provided before taking up the work.
4.32	Radiography of joints shall be so planned after welding that the same is done either on the same day or next day of the welding to assess the performance of HP welders. If the performance of welder is unsatisfactory, he is to be replaced immediately.
4.33	Wherever radiographs are not accepted, on account of bad shot, joints shall be re-

	radiographed and re- submitted for evaluation.
4.34	However, if the defect persists after first repair, further repair work followed with radiography shall be repeated till the joint is made acceptable. In case the joint is not repairable, the same shall be cut, re-welded and re-radiographed at contractor's cost.
4.35	If the contractor does not carry out radiography work due to non-availability of source / film / chemical / operator etc., BHEL will get the work done departmentally or through some other agency at the risk and cost of the contractor.
4.36	Heat treatment and radiography may be required to be carried out at any time (day and night) to ensure the continuity of progress. The contractor shall make all necessary arrangements including labour, supervisors/ Engineer required for the work as per directions of BHEL.
4.37	The contractor shall assist BHEL Engineer in preparing complete field welding schedule for all the field welding activities to be carried out in respect of piping and equipment erected by him involving high pressure welding at least 30 days prior to the scheduled start of erection work at site. The contractor shall strictly adhere to such schedules.
4.38	The pressure parts, equipment and piping shall be erected in conformity with the provisions of Indian Boiler Regulation and as may be directed by BHEL as per any standard / specification in practice in BHEL. The method of welding (arc, gas, TIG or other method) may be indicated in the detailed drawings / schedules. BHEL Engineer will have the option of changing the method of welding as per site requirements.
4.39	Check shots as per the requirement of BHEL/ NTPC will be taken at your cost.
4.40	Welding of galvanised iron pipes/fittings would be permitted provided the same is carried out by means of special electrodes suitable for the above application and the same shall be approved by contractor. After, welding, welded portions shall be applied with three coats of zinc silicate treatment/rich paint over one coat of suitable primer. Further, the Contractor shall provide proper zinc paint at the point of welding.
5.0	**APPLICATION OF INSULATION**
5.1	All attachment welding, including welding of hooks / supports as per pitch both on equipment and piping shall be done as directed by Engineer. Attachment welding shall have to be done by certified welders. If necessary contractor may have to cut the hooks to correct length. Application of red oxide paint including supply of paint on welded portions as directed by BHEL is also included in scope of work.
5.2	The mineral wool mattresses (bonded / un-bonded) / LRB mattresses are received at site in standard sizes. These are to be dressed / cut to suit site requirements by the contractor
5.3	The number of layers / thickness of mineral wool / LRB mattresses for auxiliaries, pipe lines, valves and other vessels shall be as per various drawings and as directed by Engineer. For applying the mineral wool mattress, the required holding materials, if necessary by fabrication of rings/ hooks shall be fixed as directed and as per drawings and spec.
5.4	The contractor should ensure, proper finishing of surface of the insulation, sheeting and cementing.
5.5	The contractor should ensure that the finished surface of the insulation works conforms to the dimensions and tolerances given in the drawings. Aesthetic finish and accuracy of work are most important.
5.6	It is the responsibility of the contractor to ensure that the insulation materials and sheet metal covering issued to him for application are well protected against loss or

	damage from weather conditions. Closed / semi closed sheds or any other arrangements required for this will by him at his cost. If any damage occurs to the material due to improper storage or due to any causes attributable to the contractor except for normal breakage or damages allowed in such cases, the cost of such damaged material shall be to the account of the contractor.
5.7	Aluminum sheet cladding will be fabricated to the sizes and shapes specified in drawings. Beading, swaging, beveling of sheets, crowning the sheets if necessary will be carried out by him. Two coats of anti-corrosive black bituminous paint are to be applied on inner surfaces of the cladding. Bitumen sealing compound on the joints if necessary is included in the scope of this work. **Contractor may note that he will also supply anti-corrosive black bituminous paint & bituminous sealing compound required for above works at his cost. However if supply by the BHEL MUs same will be issue free of charges to contractor.**
5.8	Aluminum sheet metal cladding over insulation will consists of plain / ribbed / corrugated sheets. The sheets will be supplied in standard sizes. Cutting them to required size, grooving, fabricating bends, boxes etc., for proper covering is contractors responsibility. Any cutting / bending / welding of fabricated skin casing sheets if required will also covered within the scope of this contract.
5.9	A logbook shall be maintained by the contractor to obtain clearance for application of insulation. If the contractor does the work on his own accord without prior permission the area may have to be redone at his cost.
5.10	Contractor is liable for the exact accounting of the material issued to him and he shall make any unaccountable losses good. Wastage allowance for the material issued are as below:
1	Wool / LRB mattresses and cladding sheets 2%
2	Insulation bricks and mortar 2%
3	Castable refractory 1%
5.11	The entire surplus, unused materials etc., supplied by BHEL shall be returned to BHEL after the work is over. Materials like gunny bags and packing materials, empty containers may be returned at periodical intervals.
5.12	The contractor shall leave certain gaps and opening while doing the work as per instructions of BHEL engineer to facilitate inspection during commissioning and to fix gauges, fittings and instruments. The gaps will have to be finished as per drawings at a later date by the contractor at his cost
5.13	If during erection and commissioning any of the parts are to be insulated temporarily fixed and then replaced by permanent ones at a later date or if any of the parts are to be removed for modification, rectification, adjustment and then refitted or if some parts are to be opened for inspection and checking and for measurement of metal surface temperature the same may necessitate removal and re-application of insulation and sheet metal cladding, which shall be done by the contractor and the erection rate quoted shall be inclusive of such contingencies.
5.14	Removable type of insulation shall be provided for valves, fittings, expansion joints etc as per the drawings or as directed by BHEL Engineer.
5.15	All temporary pipelines required during testing, pre-commissioning and commissioning should be insulated as directed by BHEL at no extra cost to BHEL. However required insulation material shall be issued by BHEL free of cost.
5.16	**Wrapping and Coating**
5.16.1	The external surfaces of the buried pipes shall be thoroughly cleaned of rust, weld scales, burns etc. by sand or grit blasting/power tool cleaning method or any other method specified in the drawings/ documents before start application of

	anticorrosive coats. Kerosene, solvent or other cleaning material should not be used for external cleaning of the pipes. The above work shall be carried out to the satisfactory of BHEL engineers or as instructed by BHEL engineers.
5.16.2	Coating & Wrapping shall be done after completion of weld and/ or flanged connections and after completion & approval of Hydro testing.
5.16.3	The materials used for coating and wrapping are a. Coating Primer (Coal Tar Primer) b. Coating Enamel (Coal Tar Enamel) c. Wrapping Materials
5.16.4	All primer/coating/wrapping materials and methods of application shall conform to IS:10221 except asphalt/bitumen material. Materials (primer/coating/wrapping) as per AWWA-C-203 are also acceptable. Number of coats and wraps, minimum thickness for each layer of application shall be as per IS-10221. Number of. Coats and wraps shall be decided based on soil corrosivity/resistivity as indicated in IS-10221. Total thickness of completed coating and wrapping shall not be less than 4.0 mm.
5.16.5	Alternatively, the anti-corrosive protection for buried pipes can consist of anticorrosive protection Coal-tar tapes. Material and application of tapes shall conform to IS 15337 or equivalent. These-tapes shall be applied hot over the cold coal tar primer in steps of 2mm thickness so as to cover the spiral edges of the first tape by the application of second tape. The total nominal thickness of the finished protective coating shall be 4.0 mm.
5.16.6	Tests to be carried out after application – (a) Bond / Adhesion test (b) Holiday test. The preservative paint, anticorrosive tape, all the required consumables, T&Ps and the instruments required for the above application and testing are to be arranged by the contractor at his cost.
5.16.7	All the provisions for bed preparation / laying the pipe / application of primer/ coating / wrapping with tapes etc., as indicated above are applicable for buried galvanized steel (GI) pipes also.
5.16.8	**BHEL shall provide the material for the wrapping and coating on free of cost basis. In event of loss of material due to wastage/wrong application by the contractor, then contractor shall arrange the material at his own cost. Wastage allowance will be 1%.**
6.0	**PAINTING INCLUDING FINISH PAINTING**
6.1	All exposed metal parts of the equipment, structure, auxiliaries, piping, and other items (covered within the scope of this contract) after installations are to be painted. Mostly the equipment / components installed are with one coat each of primer paint and synthetic enamel / heat resistant paint. However, due to aging, the same may have got deteriorated for peeled off. The surfaces are to be thoroughly cleaned of all dirt, rust, scales, grease, oils and other foreign materials by wire brushing, scrapping, any other method as per requirement of BHEL. The same will be inspected and approved by the engineer before painting.
6.2	After applying the primer paints all structure / equipment / items, shall be finish painted with one coat of epoxy finish & one coat of aliphatic polyurethane / as specified by BHEL engineer. In case proper finish is not obtained in two coats, the contractor shall apply additional coat (s) till proper finish is achieved. After completion of painting all bright spots shall be cleaned to the satisfaction of Engineer.
6.3	Certain equipment like control panels, valves etc. shall require spray painting. The

	contractor shall make arrangements of the required equipment for spray painting. Spray painting at the job site shall be permitted only at times and locations approved by Engineer.
6.4	Contractor at no extra cost to BHEL shall supply all paints, primers, tools and other consumables including scaffolding materials required for finish painting. Paint is to be BHEL/NTPC approved make only and painting should be as per colour scheme and quality approved / specified by BHEL/NTPC. Valid Test Certificate for the paint so supplied shall be made available before use of the same on work. No paint whose shelf life has expired should be used for painting.
6.5	The contractor may be required to fill up dents / marks by applying putty before final painting of equipment. All materials and arrangements have to be made within quoted lump sum price/rates.
6.6	The contractor shall provide legends with direction of flow on equipment and piping in size specified by Engineer. Letter writing shall be done in Hindi / English or in both languages.
6.7	The painters have to undergo test on a mock plate of size 1m*1m and only qualified painters will be allowed to work. The contractor shall ensure availability of
6.7.1	• Ford Cup-4 to measure consistency of paint,
6.7.2	• Automatic magnetic gauge to measure the dry film thickness and
6.7.3	• SSPC Visual standards to assess degree of cleanliness of surfaces to be painted.
6.8	All paints should be stored in well-ventilated store. The painters and other personnel deployed should use proper protective equipment to avoid inhalation of fumes.
7.0	**TESTING, PRE-COMMISSIONING, COMMISSIONING, AND POST-COMMISSIONING**
7.1	The contractor shall carry out all the required tests,pre-commissioning and commissioning activities required for the successful and reliable operation of FGD system as per the approved commissioning procedure / quality plans of BHEL/NTPC. These would include, Air /gas tightness test of ducts, Hydraulic test of piping, Holiday test of underground piping Water fill test/vacuum box test of tanks, Trial run of pumps/blowers/ball mills/feeders/vacuum belt filter/hydro cyclones, Testing of fire protection system etc. as instructed by BHEL using their own consumables, labour and scaffoldings etc. Specific omission of any test which is required for the successfully commissioning of the FGD system does not absolve the contractor of its responsibilities of performing of that test.
7.2	All required tests (Mechanical and electrical) indicated by BHEL and their clients for successful commissioning are included in the scope of these specifications. These tests / activities may not have been listed in these specifications but contractor shall conduct the tests as per the approved commissioning procedure.
7.3	The 'Initial Operation'/trial operation of the complete facility as an integral unit shall be conducted for 720 continuous hours. During the period of initial operation of 720 hours, the FGD System shall operate continuously at full load for a period not less than 72 hours .The Initial Operation shall be considered successful, provided that each item/ part of the facility can operate continuously at the specified operating characteristics, for the period of Initial Operation with all operating parameters within the specified limits and at or near the predicted performance of the equipment/ facility.

7.4	Specialized test equipment, if any, shall be provided by BHEL / its client free of hire charges. However contractor has to take proper care of the equipment issued to him.
7.5	After completion of erection of ducts, the contractor shall conduct the air/gas tightness of the inlet duct from ID fan outlet to booster fan to absorber inlet and outlet duct from absorber outlet up to wet stack chimney. Erection etc. of blowers and blanks and putty required for conducting air tightness test shall be carried out as part of work (Putty to be procured by the contractor without any extra cost to BHEL).
7.6	All the tests may have to be repeated till all the equipment satisfy the requirement /obligation of BHEL at various stages. The contractor shall do all the repairs for site welded joints arising out of the failure during testing.
7.7	The scope of pre-commissioning activities cover installation of all necessary equipment including temporary piping, supports, valves, blanking, pumps, tanks, with access platforms valves, along with accessories required for hydro test for any other tests. The scope also covers the offsite disposal of effluents of the tests under the scope of this contract as per instruction of BHEL Engineer.
7.8	It shall be the responsibility of the contractor to provide various category of workers in sufficient numbers along with Supervisors during Pre-commissioning, commissioning and post commissioning of equipment and attending any problem in the equipment erected by the contractor till handing over. The contractor will provide necessary consumables, T&P's, IMTE's etc., and any other assistance required during this period. Association of BHEL's / Client's staff during above period will not absolve contractor from above responsibilities.
7.9	It shall be specifically noted that the above employees of the contractor may have to work round the clock along with BHEL Engineers and hence overtime payment by the contractor to his employees may be involved. The contractors finally accepted rates should be inclusive of all these factors also.
7.10	In case, any rework is required because of contractor's faulty erection, which is notice during pre-commissioning and commissioning, the same has to be rectified by the contractor at his cost. If any equipment / part is required to be inspected during pre-commissioning and commissioning, the contractor will dismantle / open up the equipment / part and reassemble / redo the work without any extra claim.
7.11	During commissioning, opening / closing of valves, changing of gaskets, realignment of rotating and other equipment, attending to leakage and adjustments of erected equipment may arise. The finally accepted price / rates shall also include all such work.
7.12	The contractor shall make all necessary arrangements including making of temporary closures on piping / equipment for carrying out the hydro-static testing on all piping, equipment covered in the specification at no extra cost.
7.13	The valves will have to be checked, cleaned or overhauled in full or in part before erection, during pre-commissioning and commissioning as may be necessary.
7.14	In case any defect is noticed during tests, trial runs and commissioning such as loose components, undue noise or vibration, strain on connected equipment etc., the contractor shall immediately attend to these defects and take necessary corrective measures. If any readjustment and realignment are necessary, the contractor at his cost shall do the same as per Engineer's instructions including repair, rectification and replacement work. The parts to be replaced shall be provided by BHEL.
7.15	All temporary supports shall be removed in such ways that pipe supports are not subjected to any sudden load. During hydraulic testing of pipes, all piping having

	variable spring type supports shall be held securely in place by temporary means while constant spring type support hangers shall be pinned or blocked solid during the test.
7.16	The contractor shall carry out cleaning and servicing of valves and valve actuators prior to pre-commissioning tests and / or trial operations of the plant. A system for recording of such servicing operations shall be developed and maintained in a manner acceptable to BHEL Engineer to ensure that no valves and valve actuators are left unserviced. Wherever necessary as required by BHEL Engineer, the contractor shall arrange to lap / grind valve seats. Cleaning and servicing of all the filters / strainers, toppings of oils coming in the system shall be done by the contractor within the accepted price.
7.17	Necessary technical support during the commissioning of the equipment's as mentioned in the clause no. 2.14.6 shall be provided by BHEL
7.18	At the time of each inspection, the contractor shall take note of the decisions / changes proposed by the Engineer and incorporate the same at no additional cost. The contractor shall carry out any other test as desired by BHEL Engineer/ Manufacturer on erected equipment covered under scope of this contract during testing and commissioning to demonstrate the physical completion of any part or parts of the work performed by the contractor
7.19	The scope of pre-commissioning, commissioning and post commissioning activities cover installation of all necessary temporary piping, supports, valves, blanking, pumps, tanks etc.and other accessories with access platforms valves, pressure gauges, electric cables, switches, cutting of some of existing valve, placing of rubber wedges in the valves etc., required for hydro test, or any other tests as the case may be and will carry out above activities under this scope of work as per instructions of BHEL. The scope also covers the off site disposal of effluents
7.20	It shall be the responsibility of the contractor to preserve the cleaned surface as per BHEL's requirement.
7.21	The contractor shall make all necessary arrangements including making of temporary closures on piping/ equipment for carrying out the hydro-static testing on all piping equipment covered in the specification at no additional cost. The contractor shall carryout the required test on the pipelines such as Hydraulic Test of various piping systems, Ultrasonic Test for weld defects and finding thickness, Dye penetrant test, Magnetic particles test for Weld defects and materials defects etc. All facilities (manpower, materials, equipment, consumables etc.) including proper approaches wherever required shall be provided by the contractor for satisfactory conduction of above tests. Special equipment such as magnetic particle tester, ultrasonic test kit and engineers required for these tests shall be arranged by the contractor along with Qualified technician within finally accepted rates.
7.22	In certain places blanking has to be resorted prior to Hydraulic test and spool pieces have to be erected in place of control valves, orifices and other fittings and these spool pieces have to be subsequently replaced with the regular valves/ fittings by the contractor at no extra cost.
7.23	During this period though the BHEL's/ client's staff will also be associated in the work, the contractor's responsibility will be to arrange for the complete requirement of supervision, consumables, labour, T&P and IMTEs required till such time the commissioned units are taken over by the BHEL's customer.
7.24	It is possible that due to any reason the final supporting may not be completed before conducting Hydraulic Test. The contractor may have to strengthen or install any additional supports as per instruction of BHEL. This work is a part of the work and no additional payment shall be made on this account

7.25	All the shafts of the equipment shall have to be properly aligned to that of matching equipment to perfection, accuracy as required and the equipment shall be free from excessive vibration so as to avoid over-heating of bearings or other conditions, which may tend to shorten the life of the equipment. All bearings, shafts and other rotating parts shall be thoroughly cleaned and lubricated as per recommendations of BHEL engineer.
7.26	During commissioning changing of gaskets, tightening of bolts, realigning of rotating and other equipment, attending to leakage and minor adjustments of erected equipment may arise. The quoted rate of contractor shall be inclusive of all such works
7.27	Lubricating oil units of the rotating machines are to be cleaned thoroughly before pouring of final lubricating oil. Topping up of lubricants during running of the set till handing over to be done by the vendor. Required lubricants both for first filling and topping up are to be supplied by BHEL free of cost. The empty containers of the lubricating oils should be returned to BHEL stores/place indicated by BHEL from time to time.
7.28	The instruction of the motor manufacturer regarding storage of the motors and re conservation must be strictly followed without any deviation.
7.29	Attending the punch points post commissioning and resolve the deficiency for handing over the unit to customer M/s NTPC

CONTENTS

CLAUSE NO	DESCRIPTION
1.0	PROJECT SYNOPSIS AND GENERAL INFORMATION
2.0	SITE VISIT
3.0	NAME OF WORK
4.0	SCOPE OF WORK
5.0	DEVIATIONS
6.0	DEWATERING
7.0	GENERAL TECHNICAL REQUIREMENTS (CODES AND STANDARDS)
8.0	GENERAL SERVICES TO BE RENDERED BY THE BIDDER
9.0	PROTECTION
10.0	GENERAL GUIDELINES FOR FIELD ACTIVITIES
11.0	QUALITY CONTROL & QUALITY ASSURANCE
12.0	HEALTH, SAFETY & ENVIRONMENT
13.0	LAND
14.0	WATER
15.0	ELECTRICITY
16.0	CONSUMABLE
17.0	TEST CERTIFICATES
18.0	PROJECT MANAGEMENT/ CONSTRUCTION MANAGEMENT
19.0	TOOLS & PLANTS (TO BE PROVIDED BY CONTRACTOR)
20.0	TOOLS & PLANTS (TO BE PROVIDED BY BHEL ON SHARING BASIS)
21.0	INSURANCE
22.0	TIME SCHEDULE
23.0	COMPLETION PERIOD
24.0	LIQUIDATED DAMAGE/ PENALTY
25.0	CERTIFICATE TOWARDS COMPLETION
26.0	GUARANTEE
27.0	INTEREST BEARING RECOVERABLE ADVANCE/ MOBILISATION ADVANCE
28.0	OVER RUN CHARGES
29.0	REVISION ON ACCEPTED CONTRACT RATE
30.0	PRICE VARIATION CLAUSE
31.0	EXTRA/ ADDITIONAL ITEMS OF WORK
32.0	SECURITY DEPOSIT, PERFORMANCE BOND & FINAL BILL
33.0	TAXES, DUTIES ETC
34.0	INTERIM PAYMENTS
35.0	CONTRACT PRICE
36.0	OTHER TERMS
	ANNEXURE-A
	ANNEXURE-B
	ANNEXURE-I
	ANNEXURE-II
	ANNEXURE-III
	ANNEXURE-IV
	ANNEXURE-V
	ANNEXURE-VI
	ANNEXURE-VII
	ANNEXURE-VIII
	ANNEXURE-IX
	ANNEXURE-X

This volume shall be construed as part of tender document and shall be read along-with others volumes of tender. Unless otherwise specified, in case of any conflict or inconsistency between the general and technical conditions, the same shall be brought out by the bidder in writing to BHEL for clarification during pre-bid discussions, if applicable; failing which most stringent interpretation/ clause in favour of BHEL shall be adopted and the same shall be binding to the bidder. Unless otherwise specified, all terms & conditions shall be applicable for entire scope and for each package of the tender.

CLAUSE NO	DESCRIPTION
1.0	PROJECT SYNOPSIS AND GENERAL INFORMATION
1.1	Name of the NTPC : NTPC Capacity : 3 x 660 MW Nearest Railway Station : Khalari Railway Station on Ranchi Garhwa section of Eastern Railways (40 km from Project site) Nearest Town : Tandwa in Chatra District Nearest commercial airport : Ranchi (150 km from Project site) The site is located near Tandwa town having latitude and longitude of about 230 50' N to 230 52' N and 84059' E to 850 2' E respectively. It is essential that the bidder visit site and acquaint with the conditions prevailing at site before submission of the bid. The information given herein is for general guidance and shall not be contractually binding on BHEL. BHEL has been awarded the work of Design, Engineering, Supply, Erection, Testing, Commissioning, Trial run and Handing over of complete mechanical, electrical, C&I and associated civil and structural works for the Flue Gas Desulphurization(FGD) system and its auxiliaries for 3 X 660 MW North Karanpura STPP, Jharkhand
2.0	SITE VISIT
	The contractor should visit project site and acquire full knowledge and information about conditions prevailing at site and in & around the plant premises, together with all the statutory, obligatory, mandatory requirements of various authorities before submission of the bid.
3.0	NAME OF WORK
	Erection, testing, commissioning, trial operation and handing over of flue gas desulphurization system (FGD) at 3 X 660 MW North Karanpura STPP, Jharkhand.
4.0	SCOPE OF WORK
4.1	The scope broadly covers providing labour, supervision, materials (except those which will be supplied by BHEL free of cost), T&Ps, consumables etc as per technical specification and terms & conditions of tender taking into account all clarifications, confirmations and agreements till date for Complete work of handling including receipt of materials from BHEL/Client's stores/storage yard, arranging their issue, site transportation, temporary storage prior to erection, if required, cleaning, transportation to site preservative painting, pre-assembly erection, alignment, welding, leveling, adjustment, chipping & leveling of foundation, all pre-commissioning tests, commissioning, start-up and trial operation and handing over of total Flue Gas Desulphurisation Plant of 3 X 660 MW North Karanpura STPP, Jharkhand. Detailed scope is as per followings:
4.1.1	Supply of raw materials & fabrication of auxiliary support, small beam & inserts, share keys etc., Erection, testing, commissioning, trial run and handing over of the FGD system (Structural & Mechanical) as per the tender specifications. FGD system mainly consists of Absorber tower along with oxidation blowers, booster fans, Lime stone grinding and slurry preparation system consist of wet ball mills , lime stone silos , slurry pumps, Gypsum dewatering system, associated piping, other auxiliaries i.e Fire protection system as per followings:

	1. Absorber system 2. Common limestone grinding & slurry preparation system. 3. Common Gypsum dewatering system. 4. Auxiliary absorbent tank – for storage of absorber slurry of one unit. 5. Process water & cooling water storage & pumping system. 6. Sump & sump pumps 7. Elevator 8. Booster fans 9. Structural steel (for absorbers, tanks & ducting)
4.2	The scope of work under these specifications for Supply of raw materials & fabrication of auxiliary support, small beam & inserts, share keys etc , Erection, testing, commissioning, trial operation & handing over of FGD system(Mechanical),fire protection system broadly consists of but not limited to following:
4.2.1	Taking delivery of the materials from the project storage yard /stores /sheds to erection site.
4.2.2	Their preservation, safe keeping, watch and ward.
4.2.3	Checking, dressing, chipping and levelling of foundations.
4.2.4	Pre-assembly, erection, alignment of various equipment's, machining and grouting.
4.2.5	Welding, heat treatment, radiography, UT and other non-destructive tests wherever required as per approved quality plan/drawings/ documents.
4.2.6	Hydraulic testing, air/gas leak test, air tightness test, other pre commissioning tests as per approved quality plan/drawings/ documents.
4.2.7	Insulation and finish painting including supply of paints etc.
4.2.8	Erection and dismantling of all temporary system etc. required for above operations and other commissioning activities including post commissioning operations and stabilisation of the unit,
4.2.9	FGD system trial run, resolving any deficiencies observed and handing over the FGD system to customer M/s NTPC.
4.3	BRIEF DESCRIPTION OF THE FGD SYSTEM
4.3.1	The FGD system shall be based on Wet Limestone Forced Oxidation process. Each unit shall be provided with an independent absorber.
4.3.2	Gas from terminal point on ID fan discharge duct shall be taken directly to the absorber through Booster Fans. In the absorber, SO2 in flue gas shall be removed by a spray of recirculating slurry, pumped by slurry recirculation pumps.
4.3.3	Compressed oxidation air shall be blown through the slurry in the oxidation tank, to oxidize the Calcium sulphite to gypsum.
4.3.4	Clean gas from the absorber shall be taken to the Wet Chimney through three stage mist eliminators.
4.3.5	Limestone to the absorbers of the units shall be supplied by a wet limestone grinding system, common for the units. Limestone shall be fed to the Limestone day silos which in turn will feed the Limestone to wet ball mill through a gravimetric feeder.
4.3.6	The gypsum from the absorber(s) shall be pumped by dedicated gypsum bleed pumps to a common Gypsum Dewatering system consisting of two streams (2x100%) of primary and secondary hydrocyclone and vaccum belt filters for gypsum dewatering. The water removed from the absorber shall be recycled to the absorbers. The waste water from the system shall be collected and neutralized using lime and neutralized effluent shall be pumped at required pressure to waste water terminal point.
4.4	The brief list of the major equipment to be erected under the FGD system but not limited to following:
4.4.1	Absorber System along with supporting structures
4.4.2	Booster Fans & isolation gates
4.4.3	Tanks of various sizes
4.4.4	Lime stone grinding and slurry preparation system consist of lime stone silos, bunker, gravimetric feeder, wet ball mills, hydrocyclones
4.4.5	Slurry pumps (Absorber Slurry recirculation pumps, Gypsum Bleed pumps , limestone Slurry feed pumps)
4.4.6	Gypsum Dewatering system consists of Vacuum belt filter, hydrocylones
4.4.7	Process water and cooling water storage system
4.4.8	Thermal Insulation and cladding sheets
4.4.9	Sump Pumps

4.4.10	Piping system
4.4.11	Equipment Cooling water System (PHEs, DMCW pumps)
4.4.12	Misc platforms, galleries, handrails
4.4.13	Fire Protection System including hydrant , MVWS,HVWS
4.4.14	Equipment Handling System
4.4.15	All required structures for equipments & ducting
4.4.16	All shop fabricated structural steel including materials handling of the same.
4.5	Tentative weight to be erected for the FGD System shall be 38263 MT and detailed break up indicated in Annexure-II.
4.5.1	The contractor is required to erect actual tonnage (irrespective of any variation plus or minus) which may be necessary to complete their work and commission above system and complete the work in all respects as detailed in tender specifications, for which payments shall be released on finally accepted tonnage rates. The contractor undertakes to erect / commission actual quantities as per instruction of the BHEL Engineer and accordingly the final contract price shall be worked out on the basis of quantities actually erected at site and payments shall also be regulated for the same.
4.5.2	The customer M/s. NTPC and / or their Consultant may depute their representative for checking and supervision of important stages of work. The contractor shall be required to provide all facilities for inspection of works, without any cost implications to the BHEL. Any defect in quality of work or deviations from drawings / specifications pointed out during such inspection shall be made good by the contractor in the same way as if pointed out by the BHEL Engineer, without any cost implication to BHEL.
5.0	DEVIATIONS
	The bidder is required to submit with his offer in the relevant schedule / format without any ambiguity. Any assumptions, presumptions, deviations etc. indicated or implied anywhere by the bidder except those indicated in the deviation schedule / format will not be recognized and will not form a part of consideration / offer. In the absence of such filled-up schedule / format it will be understood and agreed that the bidder's offer is based on strict conformance to the specification and no negotiation would be allowed in this regard. BHEL reserve the right not to recognize any / all deviations submitted after opening of the bid.
6.0	DEWATERING
	Contractor shall ensure at all times that his work area & adjacent approach / access roads are free from accumulation of water, so that the materials and erection equipments are safe and the erection / progress schedule are not affected. No separate claim in this regard shall be admitted by BHEL. No separate payments for dewatering of subsoil, surface water or catchments water, if required, at any time during execution of the work including monsoon period shall be considered by BHEL.
7.0	GENERAL TECHNICAL REQUIREMENTS (CODES AND STANDARDS)
7.1	Except where otherwise specified, the plant / equipment shall comply with appropriate Indian Standard or an agreed internationally accepted Standard Specification as mentioned elsewhere in tender, each incorporating the latest revisions at the time of tendering. Where no internationally accepted standard is applicable, the bidder shall give all particulars and details as necessary; to enable BHEL to identify all of the plant/ equipment in the same detail as would be possible had there been a standard specification.
7.2	Where the bidder proposes alternative codes or standards he shall include in his tender one copy (in English) of each standard specification to which materials offered shall comply. In such case, the adopted alternative standard shall be equivalent or superior to the standards mentioned in the specification.
7.3	In the event of any conflict between the codes & standards referred above and requirements of this specification, the requirements which are more stringent shall govern.
7.4	Tools used during erection and commissioning shall not be accepted except with the specific approval of the engineer.
7.5	Wherever specified or required the plant / equipment shall conform to various statutory regulations such as Indian Boiler Regulation, Indian Electricity Rules, Indian Explosive Act, Factories Act etc, wherever required, obtaining approval for plant / equipment supplied under the specification from statutory authorities shall be the responsibility of the contractor.

8.0	GENERAL SERVICES TO BE RENDERED BY THE BIDDER
8.1	Deployment of all tools & tackle, construction machinery, transportation vehicles and all other implements in adequate number and size, appropriate for the construction work to be handled under scope of this specification except otherwise specified.
8.2	Providing support services for the contractor's erection staff e.g. construction of site offices, temporary stores, residential accommodation and transport to work site for erection personnel, watch and ward for security and safety of the materials under the Contractor's custody etc. as required.
8.3	Maintaining proper documentation of all site activities undertaken by the contractor as per the proforma mutually agreed with BHEL, submitting monthly progress reports as also any such document as and when desired by BHEL / owner, taking approval of all statutory authorities e.g., Factory Inspector, Provident Fund authority etc. for respective portions of work under the jurisdiction of such statutes of laws.
8.4	As part of overall project management activity, the contractor shall be responsible for proper co-ordination of construction activities during various phases of execution of the contract. The contractor shall identify a person designated as construction manager, with whom BHEL shall interact on matters related to execution of the contract. The construction manager shall be the single point contact person on behalf of the contractor. BHEL shall interact with the construction manager only on all matters on co-ordination between BHEL and the contractor. For timely completion of work, the contractor may have to work in one or more shifts. He will not be eligible for any extra charge on this account.
8.5	The contractor shall confine all his field operations to those works which can be reformed without subjecting the equipment and materials to adverse effects, during inclement weather conditions, like monsoon, storms etc and during other unfavourable construction conditions. No field activities shall be performed by the contractor under conditions which might adversely affect the quality and efficiency thereof, unless special precautions or measures are taken by the contractor in proper and satisfactory manner in the performance of such works and with the concurrence of the engineer. Such unfavourable construction conditions in no way relieve the contractor of his responsibility to perform the works as per the schedule.
8.6	The contractor shall supply all skilled, semi-skilled and unskilled workmen required for all works of handling and transportation from site store to erection site, erection, testing and commissioning contemplated under this specification. Only fully trained and competent men with previous experience on the job shall be employed. They shall hold valid certificates wherever necessary. BHEL reserve the right to decide on the suitability of the workers and the other personnel who will be employed by the contractor. BHEL reserves the right to insist on removal of any employee of the contractor at any time, if they find him unsuitable and the contractor shall forthwith remove him.
8.7	The supervisory staff employed by the contractor shall be technically qualified and experienced in the area of work. They shall ensure proper out turn of work and discipline on the part of labour put on the job by the contractor and in general see that the works are carried out in a safe and proper manner and in coordination with other labour and staff employed directly by BHEL or other contractors of BHEL and BHEL's client.
8.8	The contractor shall also furnish daily manpower report showing by classification the number of employees engaged in various categories of work a progress report of work as required by BHEL engineer.
8.9	The work shall be executed under the usual conditions affecting major power plant construction and in conjunction with numerous other operations at site. The contractor and his personnel shall co-operate with other personnel, and other contractors, co-ordinating his work with others and proceed in a manner that shall not delay or hinder the progress of work as a whole.
8.10	The contractor's supervisory staff shall execute the work in the most substantial and workman like manner in the stipulated time. Accuracy of work and aesthetic finish are essential part of this contract. The contractor shall be responsible to ensure that assembly and workmanship conform to the dimensions and tolerance given in the drawing / instruction given by BHEL Engineer from time to time.
8.11	It is the responsibility of the contractor to engage his workman in shifts or on overtime basis for achieving the target set by BHEL during erection, commissioning and testing period. Contractor's quoted rate shall include all these contingencies.
8.12	Any other service, although not specifically called for but required for a contract of the size and nature indicated in the specification.

9.0	PROTECTION
9.1	Equipment having anti-friction or sleeve bearings shall be protected by weather tight enclosures. Coated surfaces shall be protected against impact, abrasion, discoloration and other damages. Surfaces which are damaged shall be repainted.
9.2	Electrical equipments, controls and instrumentations shall be protected against moisture and water damages. All external gasket surfaces and flange faces, couplings, rotating equipment shafts, bearings and like items shall be thoroughly cleaned and coated with rust preventive compound and protected with suitable wood, metal or other substantial type covering to ensure their full protection. All exposed threaded parts shall be greased and protected with metallic or other substantial type protectors.
9.3	All piping, tubing and conduit connections on equipment and equipment openings shall be closed with rough usage covers or plugs. Female threaded openings shall be closed with rough usage covers or plugs or forged steel plugs. The closures shall be taped to seal the interior of the equipment. Open ends of piping, tubing and conduit shall be sealed and taped.
9.4	All other consumables to be supplied by the contractor within the quoted rate.
10.0	GENERAL GUIDELINES FOR FIELD ACTIVITIES
10.1	The contractor shall execute the works in a professional manner so as to achieve the target schedule without any sacrifice on quality and maintaining highest standards of safety and cleanliness.
10.2	The contractor shall co-operate with owner / BHEL and other contractors working in site and arrange to perform his work in a manner so as to minimise interference with other contractor's works. BHEL's engineer shall be notified promptly of any defect in other contractors' works that could affect the contractor's work. If rescheduling of contractor's work is requested by the owner's / BHEL's engineer in the interest of overall site activities, the same shall be compiled with by the contractor. In all cases of controversy, the decision of BHEL shall be final and binding on the contractor without any commercial implication.
10.3	The BHEL engineer shall hold weekly meeting of all the contractors working at site at a time and a place to be designated by the engineer to discusses interface issues. The contractor shall attend such meetings and take notes of discussions during the meeting and the decisions of the engineer and shall strictly adhere to those decisions in performing this work. In addition to the above weekly meeting, engineer may call for other meetings either with individual contractors or with selected number of contractors and in such a case the contractor, if called will also attend such meetings.
10.4	Time is the essence of the contract and the contractor shall be responsible for performance of his work in accordance with the specified construction schedule. If at any time the contractor is falling behind the schedule, he shall take necessary action to make good of such delays by increasing his work to comply with the schedule and shall communicate such action in writing to the engineer, satisfying that his action will compensate for the delay. The contractor shall not be allowed any extra compensation for such action.
10.5	The engineer shall however not be responsible for provision of additional labour and or materials or supply of any other services to the contractor except for the co-ordination work between various contractors as set out earlier.
10.6	The works under execution shall be open to inspection & supervision by BHEL's / Owner's engineer at all times. The contractor shall give reasonable notice to BHEL before covering up or otherwise placing beyond the reach of inspection any work, in order that same may be verified, if so desired by owner/ BHEL.
10.7	Every effort shall be made to maintain the highest quality of workmanship by stringent supervision and inspection at every stage of execution. Manufacturer's instruction manual and guidelines on sequence of erection and precautions shall be strictly followed. Should any error or ambiguity be discovered in such documents the same shall be brought to the notice of BHEL's engineer. Manufacturer's interpretation in such cases shall be binding on the contractor.
10.8	The contractor shall comply with all the rules and regulations of the local authorities, all statutory laws including Minimum Wages, Workmen Compensation etc. All registration and statutory inspection fees, if any, in respect of the work executed by the contractor shall be to his account.
10.9	Equipment and material, in case wrongly installed, shall be removed and reinstalled to comply with the design requirement at the contractor expense, to the satisfaction of BHEL / owner.

11.0	QUALITY CONTROL & QUALITY ASSURANCE
11.1	INSPECTION & FIELD QUALITY ASSURANCE
11.1.1	Contractor shall carry out all activities conforming to the approved Field Quality Plan (FQP) & technical instructions as revised from time to time. 'Total Quality' shall be the watchword of the work and contractor shall strive to achieve the quality standards, procedures laid down by BHEL. He shall follow all the instructions as per BHEL drawings and quality standards. Contractor shall provide the services of quality assurance engineer as per the relevant clauses.
11.1.2	Preparation of quality assurance log sheets and protocols with customer / consultants / statutory authority, welding logs, NDE records, testing & calibration records and other quality control and quality assurance documentation as per BHEL engineer's instructions, is within the scope of work / specification. These records shall be submitted to BHEL / customer for approval from time to time.
11.1.3	The protocols between contractor and customer / BHEL shall be made for correctness of foundations, materials, procedures, at each stage of installation, generally as per the requirement of customer / BHEL. This is necessary to ensure elimination of errors and to avoid accumulation and multiplication of errors.
11.1.4	A daily log book (with proper indexing) should be maintained by every supervisor / engineer of contractor, for respective area of work, on the job for detailing and incorporating alignment/ clearance / centering / levelling readings and inspection details of various equipment, etc. This log book shall be always accessible to BHEL engineers. High pressure welding (as applicable under the scope of this contract) details like serial number of weld joints, welders name, date of welding, details of repair, heat treatment etc. will be documented in welding log as per BHEL Engineer's instructions. Record of radiography (as applicable under the scope of this contract) containing details like serial number of weld joints, date of radiography, repairs, if any, re-shots etc shall also be maintained as per BHEL Engineer's instructions. Record of heat treatments (as applicable under the scope of this contract) performed shall be maintained as prescribed by BHEL.
11.1.5	The performance of welders (as applicable under the scope of this contract) will be reviewed from time to time as per the BHEL standards. Welders' performance record shall be furnished periodically for scrutiny of BHEL's Engineer. Corrective action as informed by BHEL shall be taken in respect of those welders not conforming to these standards. This may include removal/ discontinuance of concerned welder(s). Contractor shall arrange for the alternate welders immediately.
11.1.6	Only welders duly authorized by BHEL / customer / consultant after welder qualification test as per ASME Sec-Ix / AWS D1.1 (as applicable) shall be engaged on the work. All the welders shall carry identity cards as per the proforma prescribed by BHEL / Customer / Consultant.
11.1.7	Any re-laying or re-termination of cables / re-erection of instruments / recalibration of instruments etc. required due to contractor's mistake and found at any stage inspection shall be carried out by the contractor at no extra cost. Repair / rectification procedure to be adopted to make any job acceptable shall be subject to the approval of BHEL.
11.1.8	Weekly Quality Review Meeting at site shall be organised by BHEL to discuss quality issues and next weeks inspection plans. Site in-charge of the contractor along with QAEs of the contractor must be present in the meeting with closure report of the issues raised by BHEL in the previous meetings.
11.2	REQUIREMENT OF ISO 9001
11.2.1	BHEL: PSER is accredited with ISO 9001 certification and as such this work is subject to various audits to meet ISO 9001 requirements.
11.2.2	The basic philosophy of the Quality Management System under ISO 9001 is to define the organizational responsibility, work as per documented procedures, verify the output with respect to acceptance norms, identify the non-conforming product / procedure and take corrective action for removal of non-conformance specifying the steps for avoiding recurrence of such non-conformities, & maintain the relevant quality records. The non-conformities are to be identified through the conduct of periodical audit of implementation of quality systems at various locations/stages of work. Suppliers / vendors of various products / services contributing in the work are also considered as part of the quality management system. As such the contractor is expected not only to conform to the quality management system of BHEL but also it is desirable that they themselves are accredited under any quality management system standard.
11.2.3	BHEL reserves the right to carry out quarterly quality audits and quality surveillance of the systems and procedures of contractor's quality management. Contractor shall provide all necessary

	assistance to enable BHEL to carry out such audit & surveillance.			
11.2.4	Quality audits / approval of the results of test & inspection will not prejudice the right of BHEL to reject an equipment service not giving desired performance and shall not in no way limit the liabilities and responsibilities of the contractor in earning satisfactory performances of equipment / service as per specification.			
11.3	MMEs / MMRs			
11.3.1	Contractor shall ensure deployment of reliable and calibrated MMEs (Measuring and Monitoring Equipment). The MMEs shall have test / calibration certificates from authorised / Government approved / Accredited agencies traceable to National / International Standards. Re-testing / re-calibration shall also be arranged at regular intervals during the period of use as advised by BHEL Engineer within the contract price. The contractor will also have alternate arrangements for such MMEs so that work does not suffer when the particular equipment / instrument is sent for calibration. Also if any MMEs not found fit for use, BHEL shall have the right to stop the use of such item and instruct the contractor to deploy proper item and recall i.e. repeat the readings taken by that instrument, failing which BHEL may deploy MME and retake the readings at Contractor's cost.			
11.3.2	Contractor shall provide all the Measuring Monitoring Equipment (MMEs) required for completion of the work satisfactorily. These MMEs shall be of brand, quality and accuracy specified by BHEL Engineer and should have necessary calibration and other certificates as per the requirement of BHEL Engineer. Decision of BHEL Engineer regarding acceptance or otherwise of the measuring instruments / gauges / tools for the work under this specification, is final and binding on the contractor. BHEL shall give an indicative list of MMEs required for this work else where in this contract and to be made available by the contractor. The list will be reviewed by BHEL site as per the requirement of approved FQPs and the contractor shall meet any augmentation needed wherever required.			
11.3.3	It is the responsibility of the contractor to prove the accuracy of the testing / measuring / calibrating equipment brought by him based on the periodicity of calibration as called for in the BHEL's quality assurance standards/BHEL Engineer's instructions.			
11.3.4	Re-work necessitated on account of use of invalid MMEs shall be entirely to the contractor's account. He shall be responsible to take all corrective actions, including resource augmentation if any, as specified by BHEL to make-up for the loss of time.			
11.3.5	In the courses of erection, it may become necessary to carry repeated checks of the work with instruments recently calibrated, re-calibrated. BHEL may counter / finally check the measurements with their own MMEs. Contractor shall render all assistance in conduct of such counter / final measurements.			
11.4	INSPECTION BY TS / FES / QA ENGINEERS OF BHEL UNITS / ENGINEERING CENTRES			
11.4.1	Apart from day-to-day inspection by BHEL Engineers stationed at Site and Customer's Engineers, stage inspection of equipment under erection and commissioning at various stages may also be conducted by teams of Engineers from Field Engineering Services of BHEL's Manufacturing Units, Quality Assurance teams from Field Quality Assurance, Unit/Factory Quality Assurance and Commissioning Engineers from Technical Services etc. Contractor shall arrange all labour, tools and tackles etc along with proper access for such stage inspections free of cost.			
11.4.2	Any modifications suggested by BHEL FES and QA Engineers' team shall be carried out. Claims of contractor, if any, shall be dealt as per applicable clause of the contract, and provided such modifications have not arisen for reasons attributable to the contractor.			
11.5	PENALTIES ON VENDORS / SUB-CONTRACTORS AGAINST NON-COMPLIANCE OF QUALITY NORMS			
Sl. No.	Nature of Non-compliance	Penalty for Domestic Project	Penalty for Export Project	Remarks
GENERAL				
11.5.1	Unavailability of QAE deployment schedule (duly approved by BHEL Site) matching with manpower requirement of approved L2 schedule	0.10%	0.10%	Against each RA bill
11.5.2	Unavailability of required number	Rs. 1,000.00	$16.00	Per person per day

	of QAE with proper experience & NDT certification as per the requirement of the Contract			
11.5.3	Not attending quality meeting of BHEL by nominated member of vendor / sub-contractor	Rs. 2,000.00	$32.00	Per meeting
CALIBRATION				
11.5.4	Use of MMEs without valid calibration certificate	Rs. 1,000.00	$16.00	Per equipment per instance
11.5.5	Use of NDT equipment, welding equipment without having valid calibration certificate / condition not as per requirement	Rs. 1,000.00	$16.00	Per equipment per instance
WELDING & NDT				
11.5.6	Unqualified welders carrying out welding / tack welding	Rs. 1,000.00	$16.00	Per welder per instance. (Gatepass of the person shall be withheld)
11.5.7	Not using portable oven for welding consumables	Rs. 500.00	$8.00	Per welder per instance. (The consumables in the oven shall be confiscated)
11.5.8	Not using electrodes pre-baked in baking oven	Rs. 500.00	$8.00	Per instance. (The subject consumables shall be confiscated)
11.5.9	Not using welding consumables of approved make & not using correct type of electrode as per approved EWS / Drawing / WPS	Rs. 1,000.00	$16.00	Per instance. (The subject consumables shall be confiscated)
11.5.10	Non-removal of welding slag and spatters after welding	Rs. 500.00	$8.00	Per joint
11.5.11	Not using NDT equipment as prescribed in the manual / FQP / guidelines / Contract	Rs. 1,000.00	$16.00	Per equipment per instance
11.5.12	Welder doing welding without valid job card	Rs. 500.00	$8.00	Per instance
11.5.13	Discrepancy observed in the weld joints identified by BHEL / Customer for RT vs RT film offered	Rs. 2,000.00	$32.00	per joint
MATERIAL MANAGEMENT				
11.5.14	Non-maintenance of grid pillar marking	Rs. 200.00	$3.00	Per location week
11.5.15	Mismatch of location of material in store area w.r.t. location mentioned in stock register	Rs. 500.00	$8.00	Per instance
11.5.16	Non-compliance of Preservation of material as per storage & preservation manuals	Rs. 1,000.00	$16.00	Per equipment
11.5.17	Not offering received material for verification within stipulated time as per contract	Rs. 500.00	$8.00	Per instance
PAINTING & ALLIED WORKS				
11.5.18	Not using primer / paints of approved make and as per Specifications	Rs. 1,000.00	$16.00	Per instance
11.5.19	Painting without proper surface	Rs. 500.00	$8.00	Per instance

	preparation as per approved schedule / drawing / FQP			
PROTOCOLS & LOG SHEETS				
11.5.20	Delay in preparation of Protocols / Logsheets as per approved FQP within 3 days of completion of checks	Rs. 200.00	$3.00	Per protocol per day delay
INSPECTION OF BOUGHT-OUT ITEMS / CONSUMABLES				
11.5.21	Delay in offering inspection of Bought-out Items / Consumables / Aggregates (for items which need site inspection as per approved QP) within 3 days of receipt of material at site	1% of the item value of the LOT	1% of the item value of the LOT	per item per day delay after receipt of material
11.5.22	Delay in submission of required documents (viz. Invoice, Inspection Release Note, COC, MDCC, MTC as the case may be) of Bought-out Items (shop inspection items / consumables) with in 3 days of receipt of material at site.	1% of the item value of the LOT	1% of the item value of the LOT	per item per day delay after receipt of material
NOTE: Any non-conformity requiring dismantling / rework, attributable to vendor / sub-contractor, shall be penalised at a rate mentioned above or cost to BHEL, which ever is higher.				
12.0	HEALTH, SAFETY & ENVIRONMENT			
12.1	General			
12.1.1	The contractor shall comply with all the requirements of "The Building and Other Construction Workers (Regulation of Employment, Conditions of Service) Act," 1996 and its Central Rule 1998 / State Rules and any other statutory requirements as applicable.			
12.1.2	The Contractor shall follow NTPC Safety Rules as issued from time to time with respect to safety in construction & erection.			
12.1.3	The contractor shall have the approved Safety, Health and Environment (SHE) Policy in respect of Safety and health of Building Workers and it shall be circulated widely and displayed at conspicuous place in Hindi and local language understood by the majority of the workers. A copy of the safety policy should be submitted to Engineer in charge.			
12.1.4	The contractor shall submit the safety plan comprising of methods to implement the Safety Policy/ Rules, Risk assessment and ensuring Safety at work areas, Safety audits, inspections and its compliance, Supervision and Responsibility to ensure Safety at various levels, Safety training to employees, review of Safety and accident analysis, ensure Health and Safety Procedures to prevent accidents to Engineer I/c for approval as per the format of Safety plan as annexed at Annexure - I.			
12.1.5	The Contractors shall ensure proper safety of all the workmen, materials, plant and equipment belonging to him or to the Employer or to others, working at the Site.			
12.1.6	All equipments used in construction and erection by the contractor shall meet BIS I International Standards and where such standards do not exist, the Contractor shall ensure these to be absolutely safe. All equipments shall be strictly operated and maintained by the contractor in accordance with manufacturer's operation manual. The contractor should also follow Guidelines/Rules of the Employer in this regard.			
12.1.7	The Contractors shall provide suitable latest Personal Protective Equipments of prescribed standard to all their employees and workmen according to the need. The Engineer I/c shall have the right to examine these safety equipments to determine their suitability, reliability, acceptability and adaptability. The contractor should also ensure these before their use at worksite.			
12.1.8	The Contractor shall provide safe working conditions to all workmen and employees at his workplace including safe means of access, railings, stairs, and ladders, scaffolding, work platforms, toe boards etc. The scaffoldings shall be erected under the control and supervision of an experienced and competent person. For erection of scaffolds, access, work platforms etc. shall be good and the contractor shall use standard quality of material.			
12.1.9	The Contractor shall follow and comply with all the Safety Rules, standards, code of practices of NTPC and relevant provisions of applicable laws pertaining to the safety of workmen, employees, plant and equipment as may be prescribed from time to time without any protest or contest or			

	reservation. In case of any unconformity between statutory requirement and the Safety Rules of the Employer referred above, the latter shall be binding on the Contractor unless the statutory provisions are more stringent. As and when required he can refer / obtain copy of NTPC safety documents as stated above.
12.1.10	The contractor shall have his own arrangements with nearby hospitals for shifting and treatment of sick and injured. The medical examination of the workers employed in hazardous areas shall be conducted as per Rule 223 Of The Building and Other Construction Worker (Regulation of Employment and Condition of Service) Central Rule 1998 Their health records shall be maintained accordingly and to be submitted to Engineer I/c when asked for. If any worker found suffering from occupational health hazard, the worker should be shifted to suitable place of working and properly treated under intimation to Engineer I/c. The medical fitness certificate to be submitted to Engineer (I/c).
12.1.11	First Aid boxes equipped with requisite articles as specified in the Rule 231 of TheBuilding and Other Construction Worker (Regulation of Employment and Condition of Service) Central Rule 1998 shall be provided at construction sites for the use of workers. Training has to be provided on first aid to workmen & office bearers working at site.
12.2	Emergency Action Plan
	The contractor shall prepare an emergency action plan approved by his competent authority to handle any emergency occurred during construction work. Regular mock drills shall be organized to practice this emergency plan. The Emergency Action Plan should be widely circulated to all the employees and suitable infrastructure shall be provided to handle the emergencies.
12.3	Scaffolding
	The contractor shall take all precautions to prevent any accidental collapse of scaffolding or fall of persons from scaffolding. The contractor should ensure that scaffolding are designed by a competent person and it erection and repairs should be done under the expert supervision. The scaffolding shall meet the required strength and other requirements for the purpose for which the scaffold is erected. The material used for scaffold should conform to the BIS / International standards.
12.4	Opening
	The contractor shall ensure that there is no opening in any working platform/any floor of the building, which may cause fall of workers or material When ever an opening on a platform/any floor of the building is unavoidable, the opening should be suitably fenced and necessary measures for protection against falling objects or building workers from such platform are taken by providing suitable safety nets, safety belts or other similar means.
12.5	Explosives
	The contractor shall take all precautions while handling, using, storing or transporting of all explosives. Before usage of any explosive necessary warning / danger signals be erected at conspicuous places to warn the workers and general public. The contractor should strictly ensure that all measures and precautions required to be complied for use, handling, storing or transportation of explosives under the rules framed under the Explosives Act, 1884.
12.6	Fencing of Machinery
	The contractor shall provide suitable fencing or guard to all dangerous and moving parts of machinery The contractor shall not allow any of the employees to clean, lubricate, repair, adjust or examine during machinery in motion, which may cause injury to the person.
12.7	Carrying of Excessive Weight by a Worker
	The worker shall not be allowed to lift by hand or carry over his head, back or shoulder more than the maximum limit set by the prescribed rules for the construction Workers.
12.8	Dangerous and Harmful Gases / Equipment
	The contractor shall ensure that the workers are not exposed to any harmful gases during any construction activity including excavation, tunneling, confined spaces etc. The contractor should not allow any worker to go into the confined space unless it is certified by Engineer (I/c) to be safe and fit for the entry to such work place. Proper record and work permits should be followed to carry out such works.
12.9	Dangerous and Harmful Gases / Equipment
	The contractor shall ensure that the workers are not exposed to any harmful gases during any construction activity including excavation, tunneling, confined spaces etc. The contractor should not allow any worker to go into the confined space unless it is certified by Engineer (I/c) to be safe and fit for the entry to such work place. Proper record and work permits should be followed to carry out such works.
12.10	Overhead Protection
	The contractor shall ensure that any area exposed to risk of falling materials, articles or objects is roped off or cordoned off or otherwise suitably guarded from inadvertent entry of any person.

	Wherever there is a possibility of falling of any material, equipment or construction workers while working at heights, a suitable and adequate safety net should be provided. The safety net should be in accordance with BIS Standards.
12.11	Working at Heights
	All working platforms, ways and other places of construction work shall be free from accumulations of debris or any other material causing obstructions and tripping. Wherever workers are exposed to the hazard of falling into water, the contractor shall provide adequate equipment for saving the employees from drowning and rescuing from such hazards. The contractor shall provide boat or launch equipped with sufficient number of life buoys, life jackets etc. manned with trained personnel at the site of such work. Every opening at elevation from ground level through which a building worker, vehicle, material equipment etc. may fall at a construction work shall be covered and/or guarded suitably by the contractor to prevent such falls. Wherever the workers are exposed to the hazards of falling from height, the contractor shall provide full harness safety belts fitted with fall arresting systems to all the employees working at higher elevations and life line of 8 mm diameter wire rope with turn buckles for anchoring the safety belts while working or moving at higher elevations. Safety nets shall also be provided for saving them from fall from heights and such equipment should be in accordance with BIS standards. Wherever there is a possibility of falling of any material, equipment or construction workers while working at heights, a suitable and adequate safety net should be provided. The safety net should be in accordance with BIS Standards. The contractor shall provide standard prefabricated ladders on the columns where the workers are required to use them as an access for higher elevations till permanent staircase is provided. The workers shall be provided with safety belts permanent staircase is provided. The workers shall be provided with safety belts fitted with suitable fall arresting system (Fall arrestors) for climbing/getting down through ladders to prevent fall from height.
12.12	Handling of Hazardous Chemicals
	The Contractor will notify well in advance to the Engineer I/c of his intention to bring to the Site any container filled with liquid or gaseous fuel or explosive or petroleum substance or such chemicals which may involve hazards. NTPC shall have the right to prescribe the conditions, under which such container is to be stored, handled and used during the performance of the works and the Contract shall strictly adhere to and comply with such instructions. The Engineer I/c shall have the right at his sole discretion to inspect any such container or such construction plant / equipment for which material in the container is required to be used and if in his opinion, its use is not safe, he may forbid its use. No claim due to such prohibition shall be entertained by NTPC and NTPC shall not entertain any claim of the Contractor towards additional safety provisions / conditions to be provided for / constructed. Further, any such decision of the Engineer I/c shall not, in any way, absolve the Contractor of his responsibilities and in case, use of such a container or entry thereof into the Site area is forbidden by NTPC, the Contractor shall use alternative methods with the approval of the NTPC without any cost implication to the NTPC or extension of work schedule. Where it is necessary to provide and / or store petroleum products or petroleum mixtures and explosives, the Contractor shall be responsible for carrying-out such provision and / or storage in accordance with the rules and regulations laid down in Petroleum Act 1934, Explosives Act 1948, and Petroleum and Carbide of Calcium Manual published by the Chief Inspector of Explosives of India. All such storage shall have prior approval of the Engineer I/c. In case any approvals are necessary from the Chief Inspector (Explosives) or any statutory authorities, the Contractor shall be responsible for obtaining the same. The Contractor shall be fully responsible for the safe storage of his and his Sub- contractor's radio-active sources in accordance with BARC/DAE (Bhabha Atomic Research Centre/ Department of Atomic Energy, Govt. of India) Rules and other applicable provisions. All precautionary measures stipulated by BARCIDAE in connection with use, the contractor would take storage and handling of such material. The contractor shall provide suitable personal protective equipments to the workers who are handling the hazardous and corrosive substances including alkalis and acids. As a precautionary measure the contractor should keep the bottles filled with distilled` water in cupboard / Boxes near work place for emergency eye wash by worker exposed to such hazardous chemicals.
12.13	Eye Protection
	The contractor shall provide suitable personal protective equipment to his workmen depending upon the nature of hazards and ensure their usage by the workers engaged in operations like welding,

	cutting, chipping, grinding or similar operations which may cause injuries to his eyes.
12.14	Excavation
	The contractor shall take all necessary measures during excavation to prevent the hazards of falling or sliding material or article from any bank or side of such excavation which is more than one and a half meter above his footing by providing adequate piling, shoring, bracing etc. against such bank or sides. Adequate and suitable warning signs shall be put up at conspicuous places at the excavation work to prevent any persons or vehicles falling into the excavation trench. No worker should be allowed to work where he may be stuck or endangered by excavation machinery or collapse of excavations or trenches.
12.15	Electrical Hazards
	The contractor should ensure that all electrical installations at the construction work comply with the requirements of latest electricity acts / rules. The contractor shall take all adequate measures to prevent any worker from coming into physical contact with any electrical equipment or apparatus, machines or live electrical circuits which may cause electrical hazards during the construction work. The contractor shall provide the sufficient ELCBs / RCCBs for all the portable equipments, electrical switchboards, distribution panels etc. to prevent electrical shocks. The contractor should ensure use of single I double insulated hand tools or low voltage i.e., 110 volts hand tools. The contractor should also ensure that all temporary electrical installations at the construction works are provided with earth leakage circuit breakers.
12.16	Vehicular Traffic
	The contractor should employ vehicle drivers who hold a valid driving license under the Motor Vehicles Act, 1988.
12.17	Lifting Appliances, Tools & Tackles, Lifting Gear And Pressure Plant & Equipment etc.
	The contractor shall ensure all the lifting appliances, tools & tackles including cranes etc., lifting gear including fixed or movable and any plant or gear, hoists, Pressure Plant and equipment etc. are in good condition and shall be examined by competent person and only certified shall be used at sites. Periodical Examination and the tests for all lifting / hoisting equipment & tackles shall be carried out. A register of such examinations and tests shall be properly maintained by the Contractor and will be promptly produced as and when desired by the Engineer I/c or by the person authorized by him.
12.18	Excessive Noise, Vibration
	The contractor shall take adequate measures to protect the workers against the harmful effect of excessive noise or vibration. The noise should not exceed the limits prescribed under the concerned rules, Noise Pollution (Regulation and Control) Rules, 2000.
12.19	Electrical Installations
	The Contractor shall not interfere or disturb electric fuses, wiring and other electrical equipment belonging to the Employer or other contractors under any circumstances, whatsoever, unless expressly permitted in writing by the Engineer I/c to handle such fuses, wiring or electrical equipment. Before the Contractor connects any electrical appliances to any plug or socket belonging to the other contractor or the NTPC, he shall i) Satisfy the Engineer I/C that the appliance is in good working condition; ii) Inform the Engineer I/C of the maximum current rating, voltage and phases of the appliances; iii) Obtain permission of the Engineer I/C detailing the sockets to which the appliances may be connected. The Engineer I/C will not grant permission to connect until he is satisfied that: The appliance is in good condition and is fitted with suitable plug; having earth connection with the body. Wherever armored / metallic sheathed multi core cable is used, the same armored / sheathed should be connected to earth.

	iv) No repair work shall be carried out on any live equipment. The Engineer I/c must declare the equipment safe and a permit to work shall be issued by the NTPC / contractor as the case may be to carry out any repair / maintenance work. While working on electric lines / equipments whether live or dead, suitable type and sufficient quantity of tools will have to be provided by the contractor to electricians / workmen / Officers. v) The contractor shall employ necessary number of qualified, full time Electricians / Electrical Supervisors to maintain his temporary electrical installation. The installations are provided with suitable ELCBs and RCCBs wherever required
12.20	Safety Organisation
12.20.1	The contractor employing more than 250 workmen whether temporary, casual, probationary, regular or permanent shall employ at least one full time safety officer exclusively to supervise safety aspects of the equipments and workmen, who will coordinate with the NTPC Safety Officer. Further requirement of safety officers, if any, shall be guided by Rule 209 of The Building and Other Construction Worker (Regulation of Employment and Conditions of Service) Central Rule 1998. In case the work is being carried out through subcontractor, the employees / workmen of the sub contractor shall also be considered as the contractor's employees/workmen for the above purpose. In case of contractor deploying less than 250 workmen he should designate one of his Engr / supervisor or the contractor himself (if he is directly supervising the work) as safety officer in addition to his existing responsibilities. The Engr./ supervisor should get atleast 2 days safety training from any reputed organization or from NTPC before resuming the work. If already trained in past the declaration along with trg. certificate to be furnished to NTPC safety officer.
12.20.2	The name and address of such Safety Officer of the Contractor will be promptly informed in writing to the EIC with a copy to the Project Safety Officer before he starts work or immediately after any change of the incumbent is made during currency of the Contract.
12.21	Reporting of Accident and Investigation
	In case any accident occurs during the construction / erection or other associated activities undertaken by the Contractor thereby causing any near miss, minor or major or fatal injury to his employees due to any reason, whatsoever, it shall be the responsibility of the Contractor to promptly inform the same to the Engineer I/C, NTPC Safety Officer with a copy to NTPC Head of Project in the prescribed form and also to all the authorities envisaged under the applicable laws.
12.22	Right to stop Work
12.22.1	The Engineer VC shall have the right at his sole discretion to stop the work, if in his opinion the work is being carried out in such a way that it may cause accidents and endanger the safety of the persons and / or property, and / or equipments. In such cases, the contractor shall be informed in writing about the nature of hazards and possible injury / accident and he shall comply to remove shortcomings promptly. The Contractor after stopping the specific work can, if felt necessary appeal against the order of stoppage of work to the Project Manager within 3 days of such stoppage of work and decision of the Project Manager in this respect shall be conclusive and binding on the Contractor.
12.22.2	The Contractor shall not be entitled for any damages / compensation for stoppage of work, due to safety reasons and the period of such stoppage of work shall not be taken as an extension of time for Completion of the Facilities and will not be the ground for waiver of levy of liquidated damages.
12.23	Fire Protection
	The contractor shall provide sufficient fire extinguishers at place /s of work. The fire extinguishers shall be properly maintained as per relevant BIS Standards. The employees shall be trained to operate the fire extinguishers / equipment.
12.24	Penalties
	I. If the Contractor fails in providing safe working environment as per the Safety Rules of NTPC or continues the work even after being instructed to stop the work by the Engineer I/C as provided in, the Contractor shall be penalized at the rate of Rs. 25,000/- per day or part thereof till the instructions are complied with and so certified by the Engineer I/C. However, in case of accident, the provisions contained in relevant sub clause shall also apply in addition to the penalties mentioned in this sub-clause.

	II. If the Contractor does not take all safety precautions and / or fails to comply with the Safety Rules as prescribed by the Employer or under the applicable law for the safety of the plant and equipment and for the safety of personnel and the contractor does not prevent hazardous conditions which cause injury to this own employees or employees of other contractors, or NTPC's employees or any other person who are at the Site or adjacent thereto, the Contractor shall be responsible for payment of penalty to NTPC as per the following schedule:- a) Fatal injury or accident causing death: Penalty @10% of contract value or Rs. 5,00,000/- per person, which ever is less. b) Major injuries or accident causing 25% or more permanent disablement to workmen or employees: Penalty @2.5% of contract value or Rs. 1,00,000/- per person which ever is less Permanent disablement shall have the same meaning as indicated in The Workmen's Compensation Act' 1923. The penalty mentioned above shall be in addition to the compensation payable to the workmen / employees under the relevant provisions of the Workmen's Compensation Act' 1923 and rules framed there under or any other applicable laws as applicable from time to time. III. If any contractor worker found working without using the safety equipment like safety helmet, safety shoes, safety belts, etc. or without anchoring the safety belts while working at height the Engineer I/c / Safety Officer of NTPC shall have the right to penalize the contractor for Rs. 200/- per person per day and such worker shall be sent out of the workplace immediately and shall not be allowed to work on that day. Engineer I/c / Safety Officer of NTPC will also issue a notice in this regard to the contractor. IV. If two or more fatal accidents occur at same NTPC site under the control of contractor during the period of contract and he has (1) not complied with keeping adequate PPEs in stock or (2) defaulted in providing PPEs to his workmen (3) not followed statutory requirements / NTPC safety rules (4) been issued warning notice/s by NTPC head of the project on non observance of safety norms (5) not provided safety training to all his workmen, the contractor can be debarred from getting tender documents in NTPC for two years from the date of last accident. The safety performance will also be one of the overriding criteria for evaluation of overall performance of the contractors by NTPC. The contractor shall submit the accident data including fatal / non-fatal accidents for the last 3 years where he has undertaken the construction activities Projects-wise along with the tender documents. This will also be considered for evolution of tender documents. If the information given by the contractor found incorrect, his contract will be liable to be terminated.
12.25	The Contractor will make available minimum quantity of all safety equipments and safety personal protection equipments (PPEs) of required specifications as per suggestive list included bidding documents as a part of "List of minimum T & P". Further Contractor will ensure availability of additional requirement for individual worker and safety equipment as per site requirement during execution of the contract till its completion.
12.26	Award If the Contractor's performance on safety front is found satisfactory i.e. without any fatal/reportable accident in the year of consideration; he may be considered for suitable award "ACCIDENT FREE SAFETY MERITORIOUS AWARD" as per scheme of the employer.
12.27	The Contractor shall abide by the following during Construction and Erection activities I. Chain pulley block shall not be used for loads more than 2 (Two) tonne. II. Hydra shall not be used for material transport. III. Cage shall necessarily be provided to Monkey ladders of height more than 4 m.

	IV. Fencing shall be provided to all Electrical Distribution boards and transformers etc.
12.28	Further details of applicable HSE norms shall be as per HSE clause of Tender SCC.
13.0	LAND
13.1	The contractor has to plan and use the existing land in the Project Premise considering the use of land by other Civil / mechanical / electrical contractors and the storage of plant machineries and materials. The existing land shall be shared by all erections agencies. Land will be allocated with certain time frame and to the extent available / considered necessary, and will be reviewed by BHEL depending upon the area availability.
13.2	Land for labour colony near Project Premise is available free of cost from NTPC, the contractor shall construct labour colony / hutment as per his requirements after obtaining approval of formalities from statutory body.
13.3	The contractor will be responsible for handing back all lands, as handed over to him by BHEL / NTPC.
13.4	Land within plant premises for fabrication, batching plant, office, storage area etc. for construction purpose shall be provided as per availability free of cost.
14.0	WATER
14.1	BHEL will provide single point supply for construction & drinking water inside the project premises for office free of cost.
14.2	Further necessary network for construction & drinking water system shall be done by the bidder at his own cost.
14.3	Contractor should arrange for water for labour colony of their own.
14.4	BHEL shall not be responsible for any inconvenience or delay caused due to any interruption of water supply and the contractor shall claim no compensation for delay in work for such interruption. Contractor may make standby arrangement for water at their own cost.
14.5	Contractor will have to arrange for storage of water to meet the day-to-day requirement.
14.6	The availability of water (construction as well as drinking) may be limited. Contractor shall ensure that no water is wasted. In this regard the contractor shall take all necessary measure towards preservation of water.
15.0	ELECTRICITY
15.1	BHEL shall provide construction power free of charge at 415V level at one point. Contractor has to make their own distribution arrangement to draw electricity. Overall area illumination will be provided by BHEL. However, for night working contractor should arrange illumination as and when required by them.
15.2	The bidder shall have to provide earth leakage circuit breaker at each point wherever human operated electrical drives/ T&Ps are deployed.
15.3	The power supply will be from the available grid. BHEL shall not be responsible for any inconvenience or delay caused due to any interruption of power supply/ variation in voltage level and no compensation for delay in work can be claimed by the contractor due to such non-supply on the grounds of idle labour, machinery or any other grounds.
15.4	Bidder will have to arrange sufficient illumination at their own work areas.
15.5	The contractor should ensure that the work in critical areas is not held up in the event of power breakdown. In the event of breakdown in the electric supply, if the progress of work is hampered, it will be the responsibility of the contractor to step up the progress of work after restoration of electric supply so that overall progress of work is not affected.
15.6	The contractor shall have to make arrangement at their own cost for illumination that will be required in the working area for execution of the work & safety of workmen.
15.7	Contractor shall make arrangement of electricity of their own for labour colony.
16.0	CONSUMABLE
16.1	All consumables, like gas, electrodes, chemicals, lubricants etc. required for the scope of work, shall be arranged by the contractor at his cost unless otherwise specifically mentioned in the contract.
16.2	All consumables to be used for the job shall have to be approved by NTPC / BHEL prior to use.
16.3	In the event of failure of contractor to bring necessary and sufficient consumables, BHEL may arrange for the same at the risk and cost of the contractor. The entire cost towards this along-with overhead shall be paid by the contractor or deducted from the contractor's bills.

17.0	TEST CERTIFICATES
	Necessary test certificates of all materials supplied by contractor are to be produced to BHEL prior to use of those materials.
18.0	PROJECT MANAGEMENT/ CONSTRUCTION MANAGEMENT
	To meet the need of construction management at site, contractor shall provide the following services within quoted / accepted rates.
18.1	PLANNING & MONITORING
18.1.1	The bidder shall prepare detail construction schedule (L-3) as per completion dates given in this document. This schedule must include all milestone and key activities for each sub-systems / components in the areas of engineering (wherever applicable), procurement, manufacture (wherever applicable), ecogniz, excavation/ construction/ erection. This network must conform to the overall project schedule. The bidder should also ensure monitoring of these activities at least weekly basis to start with and on daily basis whenever required by BHEL.
18.1.2	The bidder shall also prepare progress report indicating progress on key activities, management summary for critical activities, list of actions requiring attention of BHEL. This schedule is to be preferably made in PRIMAVERA/ MS PROJECTS, so that the same is compatible with BHEL's project management software.
18.1.3	The bidder will have to Supply & install of 1 No. PC (multimedia PC work station Pentium- Core-i5-650, 3.2 GHZ or above, 1 TB HDD, 8 GB RAM, 100 /1000 MBPS LAN card) of HP / HCL / COMPAQ / LENEVO or equivalent make with window 10 or higher, 64 bit (with roll back to 32 bit O/S and required software like MS Office 2016 or higher, AutoCAD 2014 or higher, ADOBE PDF CREATOR with 1 no. Multifunction (scanner / copy / print) & 1 No. A4 Colour laser printer as per instruction of BHEL for exclusive use of BHEL. These computers / printer / Multifunction shall remain Vendors property and they will be allowed to take out the same after closing of contract. The contractor shall provide data / information etc. in prescribed formats for periodical updating of the progress reports, material management reports, updating of network pertaining to the contractor's scope of work etc. The contractor shall also provide 1 (One) Number computer operators and 1 (One) number service staff for miscellaneous service for BHEL's use at site / Kolkata for reconciliation, progress review & day-to-day planning purpose, documentation etc. These facilities are to be provided within 30 days from LOI date till completion of scheduled contract period. If BHEL does not avail the service of computer / printer / personnel as per requirement, BHEL shall have the right to deduct the amount as per following rates on prorate basis, from contractor's RA bill or any other dues.
18.1.3.1	@ Rs 20,000 (Twenty thousand) / month for each computer operator or at actual (rate +30%) if BHEL arranges this facility, whichever is lower.
18.1.3.2	@ Rs 15,000/- (Fifteeen thousand) / month for each service staff. Or at actuals (rate +30%) if BHEL arranges this facility, whichever is lower.
18.1.3.3	@ Rs 15,000/- (Fifteen thousand)/ month for each set of computer & printer. Or at actuals (rate +30%) if BHEL arranges this facility, whichever is lower.
18.1.3.4	In the event of the contract period getting extended beyond the stipulated time for reasons not attributable to the bidder. The bidder will be reimbursed at the above mentioned rate or actual +15%, whichever is lower, if the services of operator / service staff are being used by BHEL.
18.1.3.5	The contractor's site office must have facilities of communications like E-mail, and telephone / mobile phones within a month from LOI.
18.2	PROGRESS REPORTING
18.2.1	The bidder shall submit daily, weekly and monthly progress reports for work force, materials reports, consumables (gases/electrodes) report and other reports as per pro-forma considered necessary by the BHEL. In case of any failure on contractor's part to comply with this, BHEL may at its discretion, consider to withhold part payment against their RA bills.
18.2.2	The progress report shall indicate the progress achieved against planned with reasons indicating delays, if any, and shall give the remedial actions which the contractor intends to take to make good the slippage or lost time, so that further works again proceed as per the original program and the slippages do not accumulate and effect the overall program.
18.2.3	The daily work force reports shall clearly indicate the work force deployed, category-wise specifying also the activities in which they are engaged.

18.2.4	Weekly progress review meetings will be held at site during which actual progress during the week vis-à-vis scheduled program shall be discussed or actions to be taken for achieving targets. For discussions, the contractor shall present program of subsequent week. The contractor shall constantly update/revise his work program to meet the overall requirement.	
18.2.5	Periodic progress reviews on the entire activities of execution in respect of supply and works in scope of bidder will be held once in a month at Kolkata / Site. These meetings will be attended by reasonably higher officials of the contractor and will be used as a forum for discussing all areas where progress needs to be speeded up. The contractor shall be further responsible for ensuring that suitable steps are taken to meet various targets decided upon such meetings.	
18.2.6	During construction, contractor shall take an average forty colour digital photograph / slides (indicating date) each month (not less than five per week) of the works during progress. In case of failure in providing such photograph in each month, an amount of Rs. 20,000/- per month shall be deducted from contractor's RA bill.	
18.2.7	Successful bidder has to provide for electronic/ computerized storing and re-production/ printing/ plotting of various data, log sheets, protocols, measurements etc. These may be stored in CD (as per requirement) and handed over to BHEL as per requirement.	
18.3	SITE ORGANIZATION	
18.3.1	The contractor shall maintain a site organization of adequate strength in respect of manpower, construction machinery and other implements at all time for smooth execution of the contract headed by a competent construction manager for site operations with sufficient level of authority to take site decisions. The vendor will submit organization chart (showing the name of Site-in-charge) with individual bio-data indicating various levels of experts to be posted for supervision in the fields of supervision and execution, quality, material management, planning, safety, etc. The organization shall be reinforced from time to time, as required to make up slippage (if any) from the schedule without any commercial implication to BHEL. The organization chart is to be submitted within 10 days from the date of LOI.	
18.3.2	Following (minimum) engineering manpower with power plant construction background to be deployed at site by the successful vendor for their day to day supervision etc.	
18.3.2.1	Qualified safety officers with assistants (exclusive for safety supervision for project jobs).	Officer – One no. Assistant - One no.
18.3.2.2	Site supervising engineer and supervisors for piling work etc.	Two Enigineers (day & night working). Four Supervisors (day & night working).
18.3.2.3	Engineer & Supervisors for quality inspection.	One Engineer & One supervisor (Assistant).
18.3.3	Deputation of above man-power shall be jointly decided at site in line with construction schedule.	
18.3.4	Engineer/ supervisor for other functions like store & purchase, material management, planning, finance, administration etc are to be provided as per site requirement and not considered above.	
18.3.5	In the event of non deputation of engineer/ supervisor by the bidder as per above agreed schedule, BHEL shall reserve the right to deduct Rs 70,000 per man-month for engineer, Rs 50,000 per man-month for the supervisor/ safety officer and Rs. 35000 per man-month for safety supervisor from RA bills. Further induction of manpower regarding site supervisor & site engineer will be decided at site as per requirement without any financial implication.	
18.3.6	BHEL reserves the right to reject or approve the list of personnel proposed by the contractor. The persons whose bio-data have been approved by BHEL will have to be posted at site and deviation in this regard will not be permitted unless specific & reasonable justification is made.	
18.3.7	In addition to above, a well experienced qualified engineer to be designated, as 'Project Manager', shall be deployed by the contractor. Such engineer shall have adequate exposure on the job and shall remain fully involved in all planning activities, guidance etc to contractor's own team during the complete execution period of contract.	
18.3.8	The contractor should also submit to BHEL for approval a list of T&Ps along with their fitness certificates. The tools & tackles shall not be removed from site without written permission of BHEL.	
18.3.9	The contractor should also submit network programs for the erection of various items. These networks shall show the customer / BHEL hold points (CHP), which have to be cleared by customer/ BHEL, or their authorized representatives before further erection can take place. These programs for the erection would clearly identify responsibilities of the contractor and customer/ BHEL. It is the	

	responsibility of the contractor to get the networks approved by BHEL within four weeks of the date of finalization of award of work/ placement of LOI.
18.4	CONSTRUCTION MANAGEMENT
18.4.1	Based on the approved program, the contractor shall submit a program of construction/ erection/ commissioning for the implementation. These programs would be amplified showing start of erection and subsequent activities and shall form the basis for site execution and detail monitoring. The three monthly rolling program with the first month's program being tentative based on the site condition would be prepared based on these programs. The contractor shall also be involved along with NTPC / BHEL to tie up detailed resources mobilization plan over the period of the contract matching with the performance targets.
18.4.2	The program would be jointly finalized by the site in-charge of the contractor with BHEL/ NTPC's project coordinator as well as the site-planning representative. The erection program will also identify sequential events matching financial turnover.
18.4.3	The contractor is liable to furnish all documentary evidences towards payment of Works Contract Tax as and when required by BHEL.
18.5	ERECTION SCHEDULE
18.5.1	Contractor shall submit within 07 days of LOI date, detailed program (L2 schedule) of construction / erection / commissioning along with matching resources T&P deployment and manpower deployment schedule for approval to Site In- Charge/Project Manager-Kolkata. L2 schedule shall be the working level document demonstrating contractor's ability and methods of completing the work within the key milestones identified in the tender specification These program would be amplified showing start of erection and subsequent activities and shall form the basis for site execution and detailed monitoring. The three monthly rolling program with the first month's program being tentative based on the site conditions would be prepared based on these program. The Contractor shall also be involved along with the Customer/BHEL to tie up detailed resource mobilisation plan over the period of time of the contract matching with the performance targets.
18.5.2	The program would be jointly finalised by the site in-charge of the contractor with BHEL /Customer's project coordinator as well as the site planning representative.The erection program will also identify the sequential erectable tonnages
18.5.3	Contractor shall submit daily work program based on above schedule. Deferment of above schedule is not acceptable. Contractor will adhere to schedule & augment resources to ensure completion as per schedule.
18.6	Detailed description of major equipment (per unit & common) to be Installed,tested and commissioned under this specification is given below:
	Below mentioned details are to give only general idea of FGD system/ equipment's to the bidder. Any equipment's/system's not mentioned in this specification but which are required for the completion and smooth running of the FGD system contractor shall do the erection and commissioning of that system within the finally accepted rates / prices.
18.6.1	**Absorber System:**
18.6.1.1	An independent Limestone Forced Oxidation (LSFO) type absorber system shall be provided for each unit. Each absorber system shall be complete with:
18.6.1.2	Absorber tower complete with re-circulating slurry spray header(s) and nozzles, three stage mist eliminators, wash water nozzles, oxidation tank integral to tower, oxidation headers and nozzles, and agitators and all internal systems integral to the working of the absorber.
18.6.1.3	3x100% re-circulating slurry pump for each level of spray.
18.6.1.4	Complete Ducting System from ID fan common outlet duct to absorber tower & from absorber outlet to wet stack chimney.
18.6.1.5	3x100% Centrifugal/ positive displacement type oxidation blowers / compressors
18.6.1.6	1 No. Emergency water tank for spraying water at inlet of Absorber for upset condition.
18.6.1.7	3x100% gypsum bleed pumps.
18.6.1.8	Auxiliary Absorbent tank
18.6.1.9	Passenger cum Goods elevator for each Absorber of minimum capacity of 1000 kgs.
18.6.2	**LIMESTONE GRINDING AND SLURRY PREPARATION SYSTEM(Common)**
18.6.2.1	Limestone grinding system for all the units and shall comprise of:

18.6.2.2	Three number Limestone storage silos shall be complete with supporting steel structure, platforms, staircase, air canons, power operated gates, gravimetric feeders etc.
18.6.2.3	Three numbers of wet horizontal ball mills
18.6.2.4	Three limestone slurry tanks, complete with all accessories and Agitator(s).
18.6.2.5	Limestone slurry pumps for each absorber connected to each of the limestone slurry tank. Each pump catering to slurry requirement of each unit's absorber.
18.6.2.6	Each mill shall be fed from an independent Limestone bunker. Each mill shall be complete with the following items, as a minimum requirement:
a	Bunker outlet gate
b	Gravimetric limestone feeder along with its drive and all other auxiliaries
c	Separator tank with agitator(s).
d	Mill circuit pumps.
e	One set of hydro-cyclone
f	Peripheral/central drive system with motor, speed reducer gearbox and other auxiliaries.
g	Auxiliary motor for inching operation with speed reducer.
h	Complete lubricating system
i	Lube oil pumps, coolers, duplex oil filters, connecting piping
18.6.3	**GYPSUM DEWATERING SYSTEM(COMMON)**
	Each set of dewatering equipment (01 working set + 01 standby set) shall comprise of the following items as a minimum requirement:
18.6.3.1	One set of primary hydro-cyclones
18.6.3.2	One vacuum belt filter
18.6.3.3	Vacuum receiver tank
18.6.3.4	Vacuum pump
18.6.3.5	One set of secondary hydro-cyclones
18.6.3.6	Filtrate tank along with filtrate water pump
18.6.3.7	Cake washing Pumps for Vacuum Belt Filter.
18.6.3.8	Cloth washing Pumps for Vacuum Belt Filter.
18.6.3.9	Waste water tank along with agitator and centrifugal pumps
18.6.3.10	Lime neutralization tanks
18.6.4	**PROCESS WATER STORAGE TANKS AND PUMPS**
18.6.4.1	Three Process water Storage tanks along with three numbers Booster water pumps, if required,
18.6.4.2	Process Water Pumps for each unit connected to each of the Process water Storage tanks along with all necessary piping, valves.
18.6.4.3	Mist Eliminator Wash Water Pump for each unit connected to each of the Process water Storage tanks along with all necessary piping, valves.
18.6.4.4	Three clarified water Storage tanks (each tank catering to the clarified water requirement for one vacuum Belt Filter) along with three numbers of clarified Booster water pumps, if required, from terminal point.
18.6.4.5	Emergency water storage tanks
18.7	**Booster Fan & Isolation Gates**
18.7.1	For each unit, two (2) nos. Booster Fans of axial type, Constant speed, variable pitch controlled each with drive motor, base plates, foundation bolts and nuts, inlet box, discharge case, coupling, coupling guard and suitable arrangement to prevent rain water entry to fan motor.
18.7.2	Each Booster Fan shall be provided with bearing lubrication and hydraulic blade pitch control unit(s) consisting of;
a	Oil pumps each with motor, coupling and coupling guard.
b	Oil coolers.
c	Filters, differential pressure switches, etc.
d	Oil storage tank
18.7.3	Motorized Guillotine type gates with seal air fans shall also be provided at suction & discharge of each Booster Fan.
18.7.4	Inter connected piping, valves and fittings .Electrical actuator with accessories

18.8	**PIPING**
18.8.1	**Slurry Piping**
18.8.1.1	Piping from gypsum bleed pumps to gypsum dewatering system, along with recirculation lines (if required) necessary isolation and control valves
18.8.1.2	Limestone slurry piping to each absorber, along with recirculation lines, all isolation and control valves.
18.8.1.3	All connecting pipes / chutes along with necessary valves between various systems of the mill and from hydro-cyclone to common slurry storage.
18.8.1.4	All slurry pipes having Material of construction carbon steel and rubber lined. End connections are bolted flanged connections.
18.8.2	Oxidation Air piping
18.8.3	Service Water
18.8.4	Service Air & Instrument Air
18.8.5	Process water piping
18.8.6	Equipment Cooling water system piping
18.8.7	Piping and equipment, as per requirement / drawings are to be thermally. Insulated with bonded / unbounded mineral wool /LRB mineral wool and to be covered with aluminum cladding
18.8.8	All the above systems of piping include the erection of pipes, bends, elbows, valves, fittings, impulse piping and including root valves, sampling lines, drains, hangers and supports & other accessories so as to make the systems complete in all respect.
18.9	**Fire Protection system (Common)**
18.9.1	**Hydrant System**
18.9.1.1	Hydrant system consists of (pipe, hydrant valves, landing valves, water monitors, hoses, branch pipes and nozzles etc)
18.9.2	**HVW & MVW Spray System(High Velocity and Medium Velocity)**
18.9.2.1	It shall consist of water mains network, deluge valves, isolation valves, Y type strainers, spray nozzles/ projectors, spray nozzles piping network.
18.9.3	**Fire Extinguishers**
18.9.3.1	The contractor shall install the following fire extinguishers at various locations of FGD system as per TAC requirement.
18.9.3.2	Pressurized water type (9lit. capacity as per IS 15683)
18.9.3.3	CO2 type (4.5 kg Cap IS:15683)
18.9.3.4	Dry chemical type (6 kg Cap IS:15683)
18.9.4	Necessary civil works for the fire protection system includes (trenches/ pedestals/ foundations /sheds/sandfilling) excluded from the scope of this contract and shall be done by the civil agency of the BHEL. Fire detection package and associated C&I/cabling work is excluded from scope of this contract and shall be done by another agency. However the wrapping and protective coating of the buried piping shall be in the scope of contractor.
18.9.5	The complete Fire Detection and Protection Systems shall be as per the guidelines/ codes/standards / rules of TAC/ NFPA / IS: 3034 / OISD etc. and all the systems, equipment's and installation shall be got approved from TAC accredited professional(s)-India. Customer M/s NTPC will make arrangement of TAC approved agency for accreditation of work. The contractor has to facilitate TAC for getting approval. As per TAC any modification or any rerouting of the lines, re erection of equipment should be done and same should be carried by contractor with in quoted rates. There is no extra payment will be paid.
18.10	**Equipment Cooling Water System (Common)**
18.10.1	Equipment Cooling water system for all three units with a closed circuit cooling system for cooling of the various auxiliaries of FGD system. The equipment cooling system shall include the following:
18.10.2	Selfcleaning strainers on the secondary side.
18.10.3	4 Nos (3 working + 1 standby) plate type heat exchangers.
18.10.4	4 Nos (2 Working + 2 standby)FGD Auxiliary (Secondary) Cooling water pumps, along with drives.
18.10.5	4 Nos (3 Working + 1 standby)y FGD DM (Primary) cooling water pumps along with drives.
18.10.6	Overhead DM water tank (ECW O/H tank).
18.10.7	Alkali (Sodium Hydroxide) preparation tank, agitator and motor, piping, valves etc
18.11	Tentative Weight schedule /BOQ of the FGD system given under the Annexure-II, III IV, V, VI, VII, VIII & IX.

18.12	The equipment /piping systems indicated above are only major items and does not cover all the equipment / piping system to be erected / commissioned. Contractors are however, required to erect / commission within the price quoted by them, all connected equipment / system shown in manufacturer"s drawings / other documents which may be necessary for erection completion and overall commissioning of FGD system.
18.13	The contractor undertakes to erect/ commission actual quantities as per advice of BHEL Engineer and accordingly the final contract price shall be worked out on the basis of quantities actually erected at site and payments will also be regulated for the same.
18.14	**Important information for the Erection Work of FGD system under this tender specifications:**
18.14.1	Absorber tower have top elevation of approx. 47 mtr with 7 tier structure and average casing panels have size (6 mx4m x0.5 m).
18.14.2	Absorber System W/D (wet dry) interface having lining of C276 material. Site welding of liner is in the contractor scope. BHEL supplied the liner with plug welding and special electrode for the welding of liner shall be supplied by BHEL Ranipet. Welding to be done as per approved procedure of BHEL/NTPC.
18.14.3	Tanks shall be supplied by the units in more than one segment (rolled sections) having height of each segment approx. 2500 mm. Contractor have to complete the assembly at site with necessary welding/NDT/testing as per the approved FQP. Rubber lining of the tanks (along with surface preparation by blasting or any other approved method and necessary testing i.e spark test/ pin hole test of the rubber lining) excluded from the scope of work and shall be done by rubber lining vendor of BHEL Ranipet. However necessary assistance to be provided by the contractor. Sizes of the tank mentioned below to give general idea to the bidders regarding the extent of work

	Description	**Diameter in mm**	**Height in mm**	**Qty**
1	Primary Hydrocyclone Feed Tank	7000	7500	1
2	Belt filter/Cake washing tank	3500	4200	2
3	Filtrate Water Tank	5500	6200	1
4	Secondary Hydrocyclone Feed Tank	6000	6200	1
5	Waste Water Tank	7000	8000	1
6	Lime stone Slurry Storage Tank	13500	15400	2
7	Auxiliary absorbent tank	12500	13800	1
8	Process Water tank	6000	6700	2
9	Clarified Water Tank(cake washing)	3500	4200	2
10	Emergency quench tank	5000	5700	3
11	Air receiver	1700	3300	

18.14.4	Lime stone silos shall be supplied by the units in more than one segment and height of each segment shall be 2500 mm. Contractor shall have to complete the assembly, final welding, /NDT/testing as per the approved drawings/ documents/ FQP. Sizes of the silos mentioned below to give general idea to the bidders regarding the extent of work.

18.14.4.1

Description	**Diameter in mm**	**Height in mm**	**Qty**
Lime stone Storage Silo	9300	16000	2

18.14.5	Erection and commissioning of the below mentioned equipment's/system under FGD system excluded from the scope of work under this contract. Erection and commissioning shall done by the BHEL Ranipet vendor /system supplier/OEM of the system.
a	Absorber Elevator
b	Rubber lining of tanks and absorber
c	Glass flake lining of ducts (absorber outlet to wet stack chimney portion)

18.14.6	However, contractor scope limited to extend the necessary assistance along with T&Ps, scaffolding to the vendor during the erection and commissioning of the above system.
18.15	Quantities and dimensions mentioned above for tanks, silos, absorber are indicative and to give general idea regarding the extent of work for estimation purpose. Quantity and dimension detail based on the engineering /drawings /documents available as on date of NIT and liable for variation.
19.0	TOOLS & PLANTS (TO BE PROVIDED BY CONTRACTOR)
19.1	Tentative list of T&P to be deployed by contractor for successful completion of work is mentioned in relevant Annexure-A.
19.2	The above list is only indicative and these T&Ps may not be required for entire contract period but contractor shall ensure the availability of the T&Ps as per work requirement and T&P Deployment schedule. T&P Deployment schedule shall be finalized at site in consultation with BHEL Engineer based on the work fronts/work requirement. BHEL decision shall be final and binding regarding the T&P deployment schedule. Contractor shall mobilize / maintain the T&P's as per the deployment schedule notified time to time by BHELEngineer.
19.3	As per requirement - Contractor has to deploy T&P, MMD, IMTE as per requirement of site and as decided by BHEL Engineer.
19.4	If any one of T&P mentioned above is not needed for proper execution of scope of work, provided contractor has not utilized BHEL free issued T&P for completing such work, no recovery from contractor shall be applicable.
19.5	Any additional item required in addition to above mentioned T&P for proper execution of scope of work, contractor has to arrange such T&P within quoted rate on the instruction of BHEL in writing in a reasonable period within two weeks from the written instruction from BHEL.
19.5.1	i.)In case deployment of T&P w.r.t requirement/schedule, is delayed or deployed for a shorter period or abnormal down time of T&P or ii) in case T&P w.r.t requirement was not deployed by the contractor as per instruction of BHEL and BHEL had to deploy either its own T&P or iii.)BHEL had to deploy the T&P from outside agency, then recovery shall be done from the contractor as under :
19.5.2	In case the contractor does not deploy or delays deployment or major T&P with reference to schedule specified or T&P deployed is out of service for continuous more than 5 days, BHEL will recover non-refundable penalty per day in the following manner- In respect of each 40MT/50MT crane- @ Rs 5000/- per day In respect of each 10/12/14/18 MT Nextgen pick & carry type tyre mounted mobile crane - @ Rs 3000/- per day. In respect of each trailer 12/15/30 MT- @ Rs 2000/- per day For the daily recovery rate for other T&P/IMTEs BHEL Engineer decision shall be final and binding on the contractor.
19.5.3	In case BHEL had to deploy its own T&P, hire charges of T&P applicable for outside agencies as per extant guidelines for "Hire Charges on issue of Capital Tools & Plants" shall be recovered.
19.6	In case BHEL had to deploy the T&P from outside agency, actual hiring cost plus applicable overheads shall be recovered.
19.7	All the tools and tackles/measuring instruments shall be duly tested/calibrated and valid certificate to that effect should be submitted to BHEL site in-charge before the start of work.
19.9	If the work related to T&Ps mentioned above is completed then, BHEL can release that T & P during contract period / extended period if any. However, written permission shall be taken by contractor from BHEL construction Manager for releasing the T&P.
20.0	TOOLS & PLANTS (TO BE PROVIDED BY BHEL ON SHARING BASIS)
20.1	List of T&P to be provided by BHEL on sharing basis for successful completion of work is mentioned in relevant Annexure-B.
20.2	As per the relevant clause of SCC shall read as day-to-day upkeep and running maintenance like filling topping up of lubricants, changing filters, etc. including repair of self-starter, batteries and dynamo of these cranes shall be excluded from the scope of the contractor. In case of breakdown of crane, contractor shall provide the necessary manpower for maintenance of the crane to maintenance agency, failing to do so BHEL will get the job done at the risk and cost of contractor. BHEL may also provide cranes through crane hiring agencies in which case the day-to-day upkeep and running maintenance shall be excluded from scope of contractor.
20.3	As per the relevant clause of SCC, the operator, helper & maintenance personal for BHEL's cranes

	100 MT & above capacity being provided by BHEL free of cost. Further fuel for operation of all BHEL cranes shall be provided by contractor without any extra cost.	
20.4	The Crane will be provided as per requirement and availability at the sole discretion of the BHEL Engineer.	
20.5	The contractor shall make necessary arrangement like laying of special sleeper beds, assembly & dismantling of heavy lift attachment, boom, jib etc. for movement and operation of crane.	
20.6	For other T&P mentioned in the list, contractor shall transport from BHEL stores, install, operate, carry out maintenance, dismantle after use and return to BHEL stores.	
21.0	INSURANCE	
21.1	BHEL shall arrange comprehensive MCE (marine cum erection) Insurance Policy for total project supply & services including balance of plant package covering transit risks & loss, destruction or damage during handling at Site, Storage, civil works ,erection, testing and commissioning up to trial operation completion of unit including theft, sabotage, fire, lightning and other natural calamities.	
21.2	Contractor shall report to BHEL in writing any damages to equipment/components on receipt, storing, and during withdrawal of the materials from stores, in transit to site and unloading at place of work and during erection and commissioning till trial operation completion including handing over. The above report shall be as prescribed by BHEL site management. Any consequential loss arising out of non-compliance of this stipulation will be borne by contractor.	
21.3	The contractor will take necessary precautions/ due care to protect the material at Project site, while in his custody from any damage/ loss till the same is handed over to BHEL/ customer at Project site. For lodging/ processing of insurance claim the contractor will submit necessary documents. BHEL will reserve the right to recover the loss from the contractor as detailed below in case the damage/loss is due to negligence/ carelessness on the part of the contractor. In case of theft of material under contractor's custody, the same shall be reported to police by the contractor immediately and copy of FIR and subsequently police investigation report shall be submitted to BHEL/ customer for taking up with insurance. However, this will not relieve the contractor of his contractual obligation for the materials in his custody.	
21.4	In case the damage/loss/theft of materials are attributable to negligence/failure in discharging the duties and obligations of the contractor, the expenses incurred for repair/replacement of such components in excess of the amount realized from the underwriters, limited to Normal Excess (Deductible Franchise) shall be recovered from the contractor.	
21.5	Other conditions of Insurance shall be as per relevant clause of GCC/SCC.	
22.0	TIME SCHEDULE	
22.1	The contractor is required to commence the work within 15 days from the date of issue of letter of intent (LOI) unless BHEL decides to fix any other later date. However, the actual date of start of work, to fix up the zero date of the contract, will be certified by BHEL Engineer after adequate mobilization of manpower and T&Ps by the contractor.	
22.2	Entire work shall be carried out in accordance with the broad schedule for FGD system as furnished below, within the stipulated completion period. This schedule will undergo review and based on progress vis-à-vis project requirement, contractor shall submit revised schedule for approval of BHEL/Customer M/s NTPC.	
22.3	Schedule for major construction activities covered under the scope of work is as below for FGD Unit #1:.	
	Major activity/Milestone description	Schedule Wef SOW
22.3.1	Start of FGD Erection Work	Within 01 month
22.3.2	Air tightness test of complete ducting-(M1)	09 months
22.3.3	Completion of Erection work of FGD system	10 months
22.3.4	Commissioning of FGD#1 -(M2)	12 months
22.3.5	Completion of Facilities FGD#1	13 months
22.4	Unit # 2 & 3 milestones will have an approximate phase lag of 3 (three) months with Unit# 1 respectively.	
22.5	The contractor shall plan his work in such a manner so as to meet the overall project schedule, in consultation with BHEL/ customer engineer.	
22.6	Contractor shall submit daily work program based on above construction schedule.	
23.0	COMPLETION PERIOD	
23.1	The entire work under this scope shall be successfully completed in all respect within 19 (NINTEEN)	

	months from the date of start of work as certified by Construction Manager, BHEL.
23.2	Contractor shall mobilise resources to start the work within 15 days from date of intimation of BHEL.
23.3	However, actual date of start of work shall be recknoned based on certification of Construction manager.
24.0	LIQUIDATED DAMAGE/ PENALTY
24.1	Intermediate Milestones (Applicable for each unit separately)
24.1.1	In case delay in achieving the Milestone as mentioned in Clause 22.3.2 (M1) above in each unit , is solely attributable to the contractor, 0.25% per week of Contract Value, limited to maximum 1% of Contract Value, will be withheld.
24.1.2	In case delay in achieving the Milestone as mentioned in Clause 22.3.4 (M2) above in each unit , is solely attributable to the contractor, 0.25% per week of Contract Value, limited to maximum 1.25% of Contract Value, will be withheld.
24.1.3	Amount already withheld, if any against slippage of clause 22.3.2 (M1) & 22.3.4 (M2) above in each unit, shall be released only if there is no delay attributable to contractor in achievement of Milestone as mentioned in clause 22.3.5 of respective unit.
24.1.4	Amount to be withheld on account of slippage of identified intermediate milestone(s) shall be withheld out of respective milestone payment and balance amount (if any) shall be withheld @10% of RA Bill amount from subsequent RA bills.
24.1.5	In case of termination of contract due to any reason attributable to contractor before completion of work, the amount already withheld against slippage of intermediate milestones shall not be released and be converted into recovery.
24.2	Final Completion(Applicable for each unit separately)
24.2.1	Final deduction towards LD (if applicable), on account of delay attributable to contractor shall be based on final delay analysis on completion / closure of contract of each unit separately. Withheld amount, if any due to slippage of identified intermediate milestone(s) of respective unit shall be adjusted against LD or released as the case may be.
24.2.2	If the completion of work of the unit is delayed beyond the completion period (Refer clause 22.3.5 & 22.4 above) due to reasons attributable to the contractor, they shall pay to BHEL as penalty a sum @ 0.5% of Contract Value per week of delay or part thereof. For Unit # 1, overall LD including LD against intermediate milestones shall be limited to maximum 4% of contract value. For Unit # 2, overall LD including LD against intermediate milestones shall be limited to maximum 3% of contract value. For Unit # 3, overall LD including LD against intermediate milestones shall be limited to maximum 3% of contract value. Thus maximum LD considering all three units shall be limited to 10% of contract value.
24.2.3	All other terms shall be as per the provision of GCC in this regard.
24.3	In case of LD recovery, the applicable GST shall also be recovered from the contractor.
25.0	CERTIFICATE TOWARDS COMPLETION
	The work under the scope of the contractor shall be deemed to have been completed in all respects only when so certified by BHEL/ customer. Decision of BHEL in this regard shall be final and binding on the contractor.
26.0	GUARANTEE
26.1	Even though the work will be carried out under supervision of BHEL, the contractor will be responsible for the quality of workmanship, quality of materials/ items and design for which the contractor is responsible.
26.2	The contractor shall guarantee the work executed under the scope of the contract for a period of 12 (twelve) months from the date of start of guarantee period as certified by the engineer (ie on completion of total work under scope and taking over by BHEL) and shall rectify free of cost all defects due to faulty supply or work done. In case the contractor fails to repair/ replace the defective works within the time specified by the engineer, BHEL may proceed to undertake the repairs/ replace such defective works at contractor's risk and cost without prejudice to any other rights and recover the same from security deposit/ other dues.
27.0	INTEREST BEARING RECOVERABLE ADVANCE/ MOBILISATION ADVANCE
	Not applicable for this tender.
28.0	OVER RUN CHARGES
	Not applicable for this tender.

29.0	REVISION ON ACCEPTED CONTRACT RATE
	Not applicable in this tender.
30.0	PRICE VARIATION CLAUSE
	Not applicable in this tender.
31.0	EXTRA/ ADDITIONAL ITEMS OF WORK
	It shall be as per GCC.
32.0	SECURITY DEPOSIT, PERFORMANCE BOND & FINAL BILL
32.1	Security deposit shall be applicable as per relevant clause of GCC (Volume-IB).
32.2	Performance bond is not applicable for the tender.
32.3	RELEASE OF SD BANK GUARANTEE (BG) AND FINAL BILL
	In addition to other provisions of tender regarding release of SD and final bill, following provisions shall also be governing to this tender.
32.3.1	For SD BG- further extension beyond date of acceptance of final bill will not be enforced if the following is fulfilled.
32.3.1.1	Contractor discharges their responsibility in r/o of submission of final bill alongwith absolute 'No Demand Certificate' and other documents as detailed below to the satisfaction of BHEL
32.3.1.2	Joint protocol of set of documents as submitted as detailed in below is certified by site & contractor's representative.
32.3.1.3	There is no negative value of the final bill (after release of SD BG) - site to certify the same before release of SD BG.
32.3.1.4	Contractor has returned the property belonging to BHEL - site to certify the same before release of SD BG.
32.3.1.5	Contractor has submitted joint protocol against `Delay analysis', if applicable for delayed execution of job.
32.3.2	List of documents to be submitted & jointly protocoled indicating acceptance of final bill by BHEL.
32.3.2.1	Final bill.
32.3.2.2	Measurement for final bill signed, jointly signed by BHEL & contractor's representative.
32.3.2.3	Statement having cumulative joint measurement for the contract, jointly signed by BHEL & contractor's representative.
32.3.2.4	Claim by contractor for refund of security deposit.
32.3.2.5	Jointly signed material reconciliation statement.
32.3.2.6	Statement of payment received from BHEL – Bill wise (Including RA/ PVC/ ORC/ rate revision/ extra work).
32.3.2.7	No claim certificate by contractor.
32.3.2.8	Clearance certificates wherever applicable, viz clearance certificates from customer, various statutory authorities, like Labour Department, PF Authorities, Commercial Department, etc.
32.3.2.9	Notarized Indemnity Bond as per prescribed format.
33.0	TAXES, DUTIES ETC
33.1	All taxes excluding GST & BOCW Cess (as specified elsewhere in the tender) but including, Charges, Royalties, any State or Central Levy and other taxes for materials if any obtained for the work and for execution of the contract shall be borne by successful bidder and shall not be payable extra by BHEL. Any increase of above at any stage during execution of contract, including extension of the contract, shall have to be borne by successful bidder contractor. Bidder's quoted/ accepted rates/ price shall be inclusive of all such requirements.
33.2	GST along with Cess (as applicable) legally leviable & payable by successful bidder as per GST Law shall be paid by BHEL, extra. Hence, bidder shall not include GST along with Cess (as applicable) in their quoted rates/ price.
33.3	Successful bidder shall furnish proof of GST registration with GSTN Portal covering the services under this contract. Registration should also bear endorsement for the premises from where the billing shall be done by successful bidder on BHEL for this project / work.
33.4	Since GST on output will be paid by BHEL separately as enumerated above, bidder's your quoted rates / price should be after considering the Input Credit under GST law at bidder's end.
33.5	TDS under Income Tax shall be deducted at prevailing rates on gross invoice value from the running bills (RA bills) unless exemption certificate from the appropriate authority / authorities is furnished.

33.6	TDS under GST shall be deducted at applicable rates on gross invoice value from the running bills (RA bills).
33.7	Bidder shall note that GST Tax Invoice complying with GST Invoice Rules (Section 31 of GST Act & Rules referred thereunder) wherein the 'Bill To' details shall encompass following. BHEL GSTN – Refer attached GSTN code table of BHEL. Name - BHARAT HEAVY ELECTRICALS LIMITED Address - Shall be intimated later. Specific details of BHEL GSTN, Name and Address as stated above, have been specified elsewhere in the tender.
33.8	Successful bidder to intimate immediately on the day of removal of goods (in case of any supply of goods) to BHEL along with all relevant details and send a scanned copy of Tax Invoice to BHEL through following communication mode for enabling BHEL to meet its GST related compliances. Portal address. and Email address – Shall be intimated later. Specific details of above shall be intimated to successful bidder by BHEL at appropriate juncture.
33.9	In case of delay in submission of above mentioned documents on the date of despatch, BHEL may incur penalty / interest for not adhering to Invoicing Rules under GST Law. The same will be liable to be recovered from successful bidder, in case such delay is not attributable to BHEL.
33.10	In case of raising any Supplementary Tax Invoice (Debit / Credit Note), successful bidder shall issue the same containing all the details as referred to in Section 34 read with Section 31 of GST Act & Rules referred there under.
33.11	Successful bidder shall comply with the Time Limit prescribed under the GST Law and rules thereof for raising of the Tax Invoice. If any supply of goods is applicable, successful bidder shall also ensure prompt delivery of goods after despatch.
33.12	Bidder shall note that in case GST credit is delayed / denied to BHEL due to delayed / non receipt of goods and / or Tax Invoice or expiry of the timeline prescribed in GST Law for availing such ITC, or any other reasons, not attributable to BHEL, GST amount shall be recoverable from successful bidder along with interest levied/ leviable on BHEL, as the case may be.
33.13	Successful bidder shall upload the invoices raised on BHEL in GSTR-1 within the prescribed time as given in the GST Act. Bidder shall note that in case of delay in declaring such invoice in your return and GST credit availed by BHEL is denied or reversed subsequently as per GST Law, GST amount paid by BHEL towards such ITC reversal as per GST law shall be recoverable from the successful bidder along with interest levied / leviable on BHEL.
33.14	Way Bill: Successful bidder to arrange for way bill / e-waybill for any transfer of goods for the execution of the contract. Successful bidder has to make their own arrangement at their cost for completing the formalities, if required, with Issuing Authorities, for bringing materials, plants & machinery at site for execution of the works under this contract, Road Permit / Way Bill, if required, shall be arranged by successful bidder and BHEL will not supply any Road Permit/ Way Bill for this purpose.
33.15	Any new taxes & duties, if imposed subsequent to due date of offer submission as per NIT & TCN, by statutory authority during contract period (including extension, if the same is not attributable to you), shall be reimbursed by BHEL on production of relevant supporting document to the satisfaction of BHEL. However, you shall obtain prior approval from BHEL before depositing new taxes and duties.
33.16	Benefits and / or abolition of all existing taxes must be passed on to BHEL against new taxes, if any, proposed to be introduced at a later date.
34 .0	INTERIM PAYMENTS
34.1	For all items of work as per Volume-III, Price Schedule, interim payment shall be limited to 95 % of the gross value of interim bill on item rate basis as per the Billing schedule (Annexure-X). The balance 5 % shall be payable on completion of guarantee period and subject to confirmation of full GST. However, this 5 %, retained from each RA bill, may be released against submission of a separate bank guarantee as per Performance Bank Guarantee format, to be kept valid till final bill & guarantee period, subject to (i) Receipt of certificate that all works are completed in all respects; (ii) Reconciliation of materials / T&P / IMTE; (iii) Completion of final bill formalities (iv) handing over to BHEL / customer and (v) subject to confirmation of full GST. Any Interest if levied thereon for reasons elaborated in Tax & duties clause of the contract and attributable to you shall be recovered for the Final Payment/ Retention amount.

34.2	All admissible recovery / adjustments etc. shall be made from the interim payable amount.
34.3	Out of this 95 %, 1.5 % of gross bill amount shall be paid in the following manner on certification by BHEL engineer after compliance of each of following activity in each month. In case of non-fulfilment of respective activity by vendor in each month, no payment shall be made by BHEL against corresponding activity and no claim of bidder at a later date, whatsoever, in this regard shall be entertained by BHEL.
34.3.1	0.7 % shall be paid on compliance of house keeping of vendor's working area and store/ office areas.
34.3.2	0.3 % shall be paid on compliance of general illumination of vendor's working area and stores, office area.
34.3.3	0.2 % shall be paid on compliance of applicable OHSAS requirement as per guidelines of BHEL/ PSER and as specified in the tender.
34.3.4	0.3 % shall be paid on compliance of applicable safety requirement as per guidelines of BHEL/ PSER and as specified in the tender.
34.4	BHEL site at its discretion may further split up the above percentages of break up and effect payment to suit the site condition, cash flow requirement, according to the progress of work.
34.5	The contractor shall submit his running bill, once in a month at the end of each month. The RA bill complete in all respect, accompanied by BHEL engineers certified measurement sheets, jointly signed, will be paid after 45 days of submission of bill, subject to completeness and correctness. Income Tax at the prevailing rates on gross value of work done & applicable surcharge shall be deducted from contractor's bill, unless exempted by Income Tax Authority.
34.6	Applicable GST, which can be claimed at any point, shall be released to you upon compliance of following:
34.7	You declaring such Invoice in your GSTR-1
34.8	Receipt of Goods / services and Tax Invoice by BHEL
34.9	Confirmation of payment of GST thereon by you on GSTN Portal
34.10	Above is subject to receipt of goods / service and tax invoice thereof along with you declaring invoice in your return and paying GST within timeline prescribed for availing ITC by BHEL.
35.0	CONTRACT PRICE
35.1	The bidder shall quote their price/rates strictly in accordance with prescribed price/rate schedule - Volume-III (SCH-1).
35.2	The quantities of the various items mentioned in the respective Price schedules, Volume-III are approximate, based on very preliminary information and may vary to any extent or to be deleted altogether. The quoted rates of each item will remain firm throughout the period of execution including extension, for reasons whatsoever, as long as variation in the total value of the work executed under any part of this contract including extra items, if any, but excluding any price variation, remains within +/- 15 % of the awarded price (as per LOI / WO).
36.0	OTHER TERMS
36.1	While bidder's scope includes deployment of all resources, like T&P, materials, consumables, manpower including supervision etc for proper completion of the subject job and no sub-contracting for execution of the job is allowed by BHEL, depending on project's requirement and on prior acceptance of BHEL, bidder may associate agencies for deployment of skilled/ unskilled manpower only for site execution. Bidder should arrange all resources, like T&P, materials, consumables, supervision etc directly for the subject job.
36.2	All other term & conditions of this specification, not mentioned above shall be governed by the pertinent provisions of GCC, Volume-IB.

Annexure-A

TENTATIVE LIST OF T&Ps and MMEs TO BE PROVIDED BY THE CONTRACTOR FOR EACH UNIT AT HIS COST

Contractors may please note that this list is not exhaustive & given for guidance purpose. The contractor may be required to deploy additional T&Ps not mentioned in this list at their own cost for proper execution of the job.

01	Crawler crane - 50 T	1 no
02	Tyre mounted Mobile crane with telescopic boom - 40T	1 no.
03	10/12/14/18 MT Nextgen pick & carry type tyre mounted mobile crane.(like Escorts F15 Pick and Carry Eqpt.)	1st – From start of work (SOW). 2nd – As per requirement
04	Tractor-trailor 20 T (with long bed)	2 no
05	40 T trailor	1 no
06	Wheel barrows	1 no
07	Electrical winch 8T	2 no
08	Electrical winch 5T	3 no
09	Electrical winch 2T	5 no
10	Electrical winch 1T	5 no
11	Chain pulley block 10T	
12	Chain pulley block 5T, 3T, 2T	As per requirement
13	Pull lift 6T, 5T, 3T, 1.5T	
14	Multipurpose pulling and lifting m/c 5T, 3T, 1.6T	
15	Hydraulic jack 100T, 50T, 20T, 10T, 5T	
16	Single sheave snatch pulley 10T, 5T	
17	Double sheave snatch pulley 10T, 5T	
18	D shackles 10T, 20T, 50T	
19	Turn buckles 3T, 5T, 8T, 10T, 15T, 20T	
20	Welding generator K320	
21	Oil cooled welding transformer 300 amp, 450 amp	
22	Air cooled welding transformer 300 amp	
23	TIG welding torch	
24	Stress relieving transformer 600 amp	
25	High frequency unit	
26	Oxygen regulator	
27	Acetylene regulator	
28	Cutogen 5	
29	Oxygen hose 10 mm	
30	Acetylene hose 10 mm	
31	Electrode drying oven	
32	Portable electrode drying cabinet	
33	Copper welding cable 600 amp, 400 amp	
34	Aluminium cable 600 amp, 400 amp	
35	Temperature recorder	
36	Thermochalk 100 deg C to 800 deg C	
37	Air compressor 250 cfm, 80 cfm	
38	Stationery compressor 350 cfm	
39	Filling pump 80 M head, 15 ltr/sec (at least one month prior to Hydraulic test)	
40	Electrode baking oven	
41	Vernier theodolite – 1 to 2 sec accuracy	
42	Dumpy level	As required

43	Spirit level 12 inch, 0.1 mm accuracy	
44	Combination squares	
45	Micrometers of different sizes	
46	Vernier callipers of different size	
47	Dial Guage	
48	Flood light with bulb	
49	Step down transformer	
50	Drilling m/c of different sizes	
51	Megger	
52	Tong tester	
53	Grinding m/c of different sizes	
54	Chamfering m/c of different sizes	
55	Trip torque wrench	
56	Aluminium telescopic ladder	
57	Manila ropes of different sizes	
58	Steel wire ropes of different sizes	
59	Drawing board	
60	Radiography equipment	
61	Moving platform	
62	Magnetic particle test equipment	
63	Ultrasonic flaw detector	
64	Dye Penetrant test kit	
65	Sheet grooving m/c for outer sheet casing	
66	Sheet bending m/c for outer sheet casing	
67	Recordable ultrasonic test equipment (UFD Krauft Kammer make USN-50 or higher version to meet the requirements)	
68	3 Phase distribution board with complete set up for drawl of construction power-600Amp	1 Set.
69	Mechanized hydraulic pipe bending machine with die of various sizes	1 Set.
70	Gas burner arrangement	1 Set.
71	Hardness tester	1 Set.
72	Air compressor (electric) – 7 kg/cm2 /100 psi/ 80 cfm	As Reqd.

NOTE:-

1. In case the bidder fails to mobilize the above T&P as per requirement and the work progress/safety is affected for non-mobilization of any required T&P, gadgets, equipment, system; BHEL shall inform the bidder writing that BHEL shall provide the required items and recover the actual cost of providing such item / system plus BHEL's overhead as per rule.
2. The Make of these items has to be approved either by BHEL or by NTPC. The same has to be tested/calibrated/certified by statutory authorities as the case may be.

Annexure-B

TENTATIVE LIST OF T&Ps TO BE PROVIDED BY BHEL ON SHARING BASIS

Sl no	**Description**	**Qty**	**Tenative Deployment schedule from the date of start of work**
1.0	CRAWLER CRANE - 100 T CAPACITY	01	From start of work (SOW).
2.0	Hydraulic Test Pump – 600 KG	01	As per requirement
3.0	Industrial Air Blower - 20000 Cum/Hr	01	As per requirement
4.0	Chemical circulating pumps as per the required capacity	01	As per requirement
5.0	Huck Bolting Machine	As per requirement	As per requirement
NOTE:			
01	The above T&Ps will be made available for the project. Contractor may make use of the T&Ps as per the provision of tender document.		
02	All other T&Ps required for proper execution of the job shall be provided by the contractor.		
03	All the T&P listed above shall be issued and used as per relevant clause in the contract.		

Annexure-I

SAFETY PLAN

01. Safety Policy of the Contractor to be enclosed:
02. When was the Safety Policy last reviewed:
03. Details of implementation procedure / methods to implement Safety Policy / Safety Rules:
04. Name, Qualification, experience of Safety Officer
05. Review of Accidents Analysis Method, Methods to ensure Safety and Health:
06. Unit executive responsible to ensure Safety at various levels in work area:
07. List of employees trained in safety employed before execution of the job. Give the details of training:
08. Safety Training Targets, Schedules, methods Adopting to providing safety training to all employees:
09. Details of checklist for different jobs / work and responsible person to ensure compliance (copy of checklist to be enclosed):
10. Regular Safety Inspection Methods and Periodicity and list of members to be enclosed:
11. Risk Assessment, Safety Audit by Professional Agencies, Periodicity:
12. Implementation of Recommendations of Audit / Inspections. Procedures for implementation and follow up:
13. Provision for treatment of injured persons at work site:
14. Review of overall safety by top Management and Periodicity:
15. System for Implementation of Statutory legislations:
16. Issue of PPEs to employees, Periodicity / stock on hand etc:

Annexure-II

Weight Summary for the E/T/C of the FGD System				
Sl.no.	**Unit**	**Description of Supplies**	**Tonnage (MT)**	**Remarks**
1	Ranipet	FGD System (Mechanical)	30921 MT	Annexure-III,IV
2	PSER	Fabricated structural steel incl. materials handling.	6740 MT	
3	PEM	Mechanical BOIs	19 MT	Annexure-V
4	PC Chennai	Piping System	66 MT	Annexure-VI
5	Bhopal	Motors	398 MT	Annexure-VII
6	PESD	Fire Protection System	113 MT	Annexure-VIII
7	TRICHY VALVE	Various types of valve	6 MT	Annexure-IX
		Total Tonnage	**38263 MT**	(AROUND)
Notes:				
1.	Weight mentioned in the annexures II,III, IV ,V ,VI ,VII, VIII & IX are tentative only and based on the engineering /drawings /documents/ inputs from MUs available as on date of NIT and liable for variation.			
2.	The contractor is required to erect actual tonnage (irrespective of any variation plus or minus) which may be necessary to complete their work and commissioning the FGD system in all respects as detailed in tender specifications and as per the drawings/documents for which payments shall be released on finally accepted tonnage rates.			
3.	The contractor undertakes to erect / commission actual quantities as per advice of BHEL Engineer and accordingly the final contract price shall be worked out on the basis of quantities actually erected at site and payments will also be regulated for the same.			

Annexure-III

A.	**Product Group (PG) Wise Weight Schedule For FGD system (BHEL Ranipet Supply for 03 units & common systems) + PSER supplied shop fabricated steel structures**		
SL NO.	**Total Weight under the FGD system including common system :**	**37661 MT**	**Ref. Rate Sch. Item no.**
I.	Structure, Duct/Dampers	(23109 + 6740) MT i.e 29849 MT	STRUCTURE, DUCT/DAMPER (1.1)
II.	Tanks	2346 MT	TANKS (1.2)
III.	Rotating Machines	4843 MT	ROTATING MACHINE (1.3)
IV.	Insulation	114 MT	INSULATION (1.4)
V.	Piping & valves	509 MT	CS PIPING (1.5.2)

SL NO.	PGMA	PGMA DESCRIPTION	Weight for 03 Units (KG)	Category/Sub group
1	55081	BOOSTER FAN FOUNDN MATL	8889.17	STRUCTURE, DUCT/DAMPER (1.1)
2	55082	BOOSTER FAN HANDRAILS & INSERT	4731.66	ROTATING MACHINE (1.3)
3	55084	AXIAL BOOSTER COOLING/SEAL FAN	9000.00	ROTATING MACHINE (1.3)
4	55089	BOOSTER FAN CANOPY FOR MOTOR	3968.92	STRUCTURE, DUCT/DAMPER (1.1)
5	55091	FISRT FILL LUBRICANTS	4500.00	ROTATING MACHINE (1.3)
6	55287	AXIAL BOOSTER FAN ROTOR	60116.75	ROTATING MACHINE (1.3)
7	55587	AXIAL BOOSTER FAN STATOR	246845.94	ROTATING MACHINE (1.3)
8	55880	AXIAL BOOSTER FAN COUPLING	6000.00	ROTATING MACHINE (1.3)
9	55980	BOOSTER FAN LOS WITH LUBRICANT	10500.00	ROTATING MACHINE (1.3)
10	55983	BOOSTER FAN ACTUATOR	300.00	ROTATING MACHINE (1.3)
11	57141	SEAL AIR HAG AND ID FAN OUTGAT	46800.00	STRUCTURE, DUCT/DAMPER (1.1)
12	57209	MTG BKT FOR CL DAMPER AIR CYL	3260.04	STRUCTURE, DUCT/DAMPER (1.1)
13	57466	PLATFORMS AND LADDERS	36000.00	ROTATING MACHINE (1.3)
14	57491	BLOWER WITH MOTOR	14400.00	ROTATING MACHINE (1.3)
15	57497	KNIFE GATE VALVE	5820.00	CS PIPING (1.5.2)
16	57540	GATE-FGD BOOSTER FAN INLET	183755.09	STRUCTURE, DUCT/DAMPER (1.1)
17	57550	GATE-FGD BOOSTER FAN OUTLET	190081.87	STRUCTURE, DUCT/DAMPER (1.1)
18	57566	PLATFORMS AND LADDERS-FGD GD	18000.00	STRUCTURE, DUCT/DAMPER (1.1)
19	57577	ELECT ACTUATOR FOR GATE,DAMPER	36000.00	STRUCTURE, DUCT/DAMPER (1.1)
20	57583	DAMPER FGD BYPASS	153062.33	STRUCTURE, DUCT/DAMPER (1.1)
21	FW212	SLURRY RECIRCULATION PUMP	758000.00	ROTATING MACHINE (1.3)

		SYST		
22	FW213	ABSORBER SYSTEM INTERNALS	360000.00	STRUCTURE, DUCT/DAMPER (1.1)
23	FW214	ABS BAFFLE GRATING	30000.00	STRUCTURE, DUCT/DAMPER (1.1)
24	FW215	MIST ELIMINATOR & ACCESSORIES	841333.00	STRUCTURE, DUCT/DAMPER (1.1)
25	FW216	ABS BAFFLE GRATING SUPP	24000.00	STRUCTURE, DUCT/DAMPER (1.1)
26	FW217	ABS ME SUPPORT	30000.00	STRUCTURE, DUCT/DAMPER (1.1)
27	FW218	ABS SPRAY PIPE SUPP	30000.00	STRUCTURE, DUCT/DAMPER (1.1)
28	FW219	ABSORBER SYSTEM-BASE	196000.00	STRUCTURE, DUCT/DAMPER (1.1)
29	FW220	ABSORBER SYSTEM-STRUCTURES	752000.00	STRUCTURE, DUCT/DAMPER (1.1)
30	FW221	ABSORBER SYSTEM-CASING BOTTOM	508000.00	STRUCTURE, DUCT/DAMPER (1.1)
31	FW222	ABSORBER SYSTEM-CASING TOP	674000.00	STRUCTURE, DUCT/DAMPER (1.1)
32	FW223	ABSORBER SYSTEM ACCESSORIES	72000.00	STRUCTURE, DUCT/DAMPER (1.1)
33	FW226	EMERGENCY QUENCH WATER TANK	60000.00	TANK (1.2)
34	FW227	EMERGENCY QUENCH SYSTEM	45000.00	STRUCTURE, DUCT/DAMPER (1.1)
35	FW228	ABSORBER-W/D INTERFACE	48000.00	STRUCTURE, DUCT/DAMPER (1.1)
36	FW229	W/D WASH SYSTEM	15000.00	STRUCTURE, DUCT/DAMPER (1.1)
37	FW230	OXIDATION BLOWER & ACC	69000.00	ROTATING MACHINE (1.3)
38	FW231	ABSORBER SHEAR PLATE	30000.00	STRUCTURE, DUCT/DAMPER (1.1)
39	FW232	DUCT SUP BYP & BUF/GGH	858000.00	STRUCTURE, DUCT/DAMPER (1.1)
40	FW233	DUCT SUPPORT BUF/GGH & ABS	2310000.00	STRUCTURE, DUCT/DAMPER (1.1)
41	FW234	DUCT SUP ABS & STACK/BYP	444000.00	STRUCTURE, DUCT/DAMPER (1.1)
42	FW235	SPECIAL FASTNERS	45000.00	STRUCTURE, DUCT/DAMPER (1.1)
43	FW236	STRUCTURES FOR RC PUMP HOUSE	90000.00	STRUCTURE, DUCT/DAMPER (1.1)
44	FW237	GALLERIES & RAILING FOR STAIR	90000.00	STRUCTURE, DUCT/DAMPER (1.1)
45	FW238	HOOK UP DUCT WITH STRUCTURE	758000.00	STRUCTURE, DUCT/DAMPER (1.1)
46	FW239	VIEWING PORTS	360000.00	STRUCTURE, DUCT/DAMPER (1.1)
47	FW243	SLURRY DIST RC PUMP & ABS	30000.00	ROTATING MACHINE (1.3)
48	FW244	OXIDATION AIR DISTRIBUTION SYS	841333.00	ROTATING MACHINE (1.3)
49	FW249	HANDLING EQUIP- RC PUMP	24000.00	ROTATING MACHINE (1.3)
50	FW250	FLOOR GRILLS -UNIT SYS	30000.00	STRUCTURE, DUCT/DAMPER (1.1)

51	FW251	EXPNSN JNT METALLIC	30000.00	STRUCTURE, DUCT/DAMPER (1.1)
52	FW252	EXPNSN JNT NON METALLIC	196000.00	STRUCTURE, DUCT/DAMPER (1.1)
53	FW255	DUCT BYP & BUF/GGH/ABS	752000.00	STRUCTURE, DUCT/DAMPER (1.1)
54	FW256	DUCT BUF/GGH & ABS	508000.00	STRUCTURE, DUCT/DAMPER (1.1)
55	FW257	DUCT ABS & BYP/STACK	674000.00	STRUCTURE, DUCT/DAMPER (1.1)
56	FW260	DUCT STR BYP & BUF/GGH/ABS	72000.00	STRUCTURE, DUCT/DAMPER (1.1)
57	FW261	DUCT STR BUF/GGH & ABS	60000.00	STRUCTURE, DUCT/DAMPER (1.1)
58	FW262	DUCT STR ABS & BYP/STACK	45000.00	STRUCTURE, DUCT/DAMPER (1.1)
59	FW265	LINING OF DUCT	48000.00	STRUCTURE, DUCT/DAMPER (1.1)
60	FW267	INSULATION MATERIALS FOR DUCT	15000.00	INSULATION (1.4)
61	FW268	FIXING COMP FOR DUCT	69000.00	INSULATION (1.4)
62	FW269	CLADDING SHEET FOR DUCT	30000.00	INSULATION (1.4)
63	FW280	FOUNDATION MATL FOR DUCT STRUC	858000.00	STRUCTURE, DUCT/DAMPER (1.1)
64	FW281	FOUNDATION MATL FOR ABS	2310000.00	STRUCTURE, DUCT/DAMPER (1.1)
65	FW282	FOUNDATION MATL FOR ELEVATOR	444000.00	STRUCTURE, DUCT/DAMPER (1.1)
66	FW283	FOUNDATION MATL RC PUMP SHED	45000.00	STRUCTURE, DUCT/DAMPER (1.1)
67	FW285	SUPRTING STR FOR EMERGENCY QWT	90000.00	STRUCTURE, DUCT/DAMPER (1.1)
68	FW292	STRUCTURES FOR ELEVATOR	90000.00	STRUCTURE, DUCT/DAMPER (1.1)
69	FW310	STRU FOR BOOSTER FAN HANDLING	360000.00	STRUCTURE, DUCT/DAMPER (1.1)
70	FW610	GALLARIES & RAIL FOR GGH	30000.00	STRUCTURE, DUCT/DAMPER (1.1)
71	FW612	GALLARIES AND RAILINGS FOR DAM	841333.00	STRUCTURE, DUCT/DAMPER (1.1)
72	FW613	GALLARIES AND RAILINGS FOR DUC	24000.00	STRUCTURE, DUCT/DAMPER (1.1)
		TOTAL WEIGHT OF THREE UNIT (MT)	**19056**	
PSER SUPPLIED SHOP FABRICATED STEEL STRUCTURES (MT)			**6740.00**	STRUCTURE, DUCT/DAMPER (1.1)

ANNEXURE-IV

B.	**FGD COMMON SYSTEM**			
SL NO.	**PGMA**	**PGMA DESCRIPTION**	**Weight for 03 Units (KG)**	**Category/Sub group**

1	55000	AXL FAN TOOL & FIXTU	300.00	STRUCTURE, DUCT/DAMPER (1.1)
2	FW701	SLURRY PUMPS & ACCESSORIES	758000.00	ROTATING MACHINE (1.3)
3	FW705	WATER PUMP & ACCESSORIES	360000.00	ROTATING MACHINE (1.3)
4	FW710	MONORAIL FOR HOIST & CRANES	30000.00	STRUCTURE, DUCT/DAMPER (1.1)
5	FW712	FLOOR GRILLS-COMM SYS	841333.00	STRUCTURE, DUCT/DAMPER (1.1)
6	FW713	CHAIN PULLEYS	24000.00	STRUCTURE, DUCT/DAMPER (1.1)
7	FW714	HOISTS	30000.00	STRUCTURE, DUCT/DAMPER (1.1)
8	FW717	MAN HOLE DOOR	196000.00	STRUCTURE, DUCT/DAMPER (1.1)
9	FW720	AGITATORS	752000.00	ROTATING MACHINE (1.3)
10	FW721	AGITATOR SUPPORT	508000.00	STRUCTURE, DUCT/DAMPER (1.1)
11	FW722	GALLERIES & RAILINGS FOR TANK	674000.00	STRUCTURE, DUCT/DAMPER (1.1)
12	FW723	AIR CANNON-SILO	72000.00	STRUCTURE, DUCT/DAMPER (1.1)
13	FW724	BAGFILTER & FAN ASSY SILO	60000.00	STRUCTURE, DUCT/DAMPER (1.1)
14	FW725	NOZZLES & FLANGES	45000.00	CS PIPING (1.5.2)
15	FW729	LIMESTONE SILO-SS 304 LINING	48000.00	STRUCTURE, DUCT/DAMPER (1.1)
16	FW730	LIMESTONE SILO STRUCTURE	15000.00	STRUCTURE, DUCT/DAMPER (1.1)
17	FW731	LIMESTONE SILO	69000.00	STRUCTURE, DUCT/DAMPER (1.1)
18	FW733	LIMESTONE SILO APPROACH PLATF	30000.00	STRUCTURE, DUCT/DAMPER (1.1)
19	FW734	LIMESTONE MILL	858000.00	ROTATING MACHINE (1.3)
20	FW738	GYPSUM BELT FILTER AND ACCESS	2310000.00	STRUCTURE, DUCT/DAMPER (1.1)
21	FW740	FOUNDATION MATL FOR TANKS	444000.00	STRUCTURE, DUCT/DAMPER (1.1)
22	FW741	LINING FOR TANK AND SUMPS COMM	45000.00	TANK (1.2)
23	FW742	LIMESTONE SLURRY STORAGE TANK	90000.00	TANK (1.2)
24	FW743	AUXILIARY ABSORBER TANK	90000.00	TANK (1.2)
25	FW744	FILTRATE TANK	758000.00	TANK (1.2)
26	FW745	WASTE WATER TANK	360000.00	TANK (1.2)
27	FW747	HYDROCLONE WASTE WATER TANK	30000.00	TANK (1.2)
28	FW748	PROCESS WATER TANK	841333.00	TANK (1.2)
29	FW749	ALL TANKS INTERNAL STRUCTURE	24000.00	STRUCTURE, DUCT/DAMPER (1.1)
30	FW751	PROCESS WATER PIPE ACCESSORIES	9000.00	STRUCTURE, DUCT/DAMPER (1.1)
31	FW752	COOLING WATER PIPE ACCESSORIES	9000.00	CS PIPING (1.5.2)

32	FW753	SLURRY PIPE ACCESSORIES	200000.00	CS PIPING (1.5.2)
33	FW754	SERVICE AIR PIPE ACCESSORIES	100000.00	CS PIPING (1.5.2)
34	FW755	INSTRUMENT AIR PIPE ACCESSORIE	20000.00	CS PIPING (1.5.2)
35	FW760	FOUNDATION MATL FOR PIPE RACKS	15000.00	STRUCTURE, DUCT/DAMPER (1.1)
36	FW761	STRUCTURE FOR PIPERACKS	120000.00	STRUCTURE, DUCT/DAMPER (1.1)
37	FW762	FNDN MATL FOR SILO STRUCTURE	2209.24	STRUCTURE, DUCT/DAMPER (1.1)
38	FW763	FNDN MATL SUB PIPE RACK	16000.00	STRUCTURE, DUCT/DAMPER (1.1)
39	FW765	STR FOR SUB PIPE RACK	120000.00	STRUCTURE, DUCT/DAMPER (1.1)
40	FW766	PLATFORM FOR PIPE RACK	53000.00	STRUCTURE, DUCT/DAMPER (1.1)
41	FW767	PLATFORM SUB PIPE RACK	53000.00	STRUCTURE, DUCT/DAMPER (1.1)
42	FW768	TRESTLE FOR MAIN PIPE RACK	267000.00	STRUCTURE, DUCT/DAMPER (1.1)
43	FW769	TRESTLE-SUB PIPE RACK	267000.00	STRUCTURE, DUCT/DAMPER (1.1)
44	FW784	HSFG BOLTS	10000.00	STRUCTURE, DUCT/DAMPER (1.1)
45	FW785	BELT FILTER WASHING TANK	20000.00	TANK (1.2)
46	FW786	PRIMARY HYDROCYCLONE FEED TANK	30000.00	TANK (1.2)
47	FW787	STRUCTURES INSIDE GDWB & BMB	33000.00	STRUCTURE, DUCT/DAMPER (1.1)
48	FW798	AIR RECEIVERS	10000.00	TANK (1.2)
49	FW800	CLARIFIED WATER TANK	9768.22	TANK (1.2)
50	FW802	NEUTRALISATION TANK & ACCESSOR	2000.00	TANK (1.2)
51	FW814	ROOFING SHEET	7000.00	STRUCTURE, DUCT/DAMPER (1.1)
52	FW815	RC PUMP INLT & OUTLT VALVE	63700.00	CS PIPING (1.5.2)
53	FW816	MANL BTRFLY VALV- UTLTY	1820.00	CS PIPING (1.5.2)
54	FW817	MOTOR BTRFL VALV-UTLTY	390.00	CS PIPING (1.5.2)
55	FW818	PNEM BTRFLY VALV-UTLTY	1040.00	CS PIPING (1.5.2)
56	FW819	MAN BTRFLY VALV-LS SLRY	2730.00	CS PIPING (1.5.2)
57	FW820	MOTOR BTRFLY VALV-LS SLRY	780.00	CS PIPING (1.5.2)
58	FW821	PNEUM BTRFLY VALV-LS SLRY	5720.00	CS PIPING (1.5.2)
59	FW822	MAN BTRFLY VALV-GYP SLRY	4810.00	CS PIPING (1.5.2)
60	FW823	MOTOR BTRFLY VALV -GYP SLRY	3000.00	CS PIPING (1.5.2)
61	FW824	PNEUM BTRFLY VALV-GYP SLRY	17150.00	CS PIPING (1.5.2)
62	FW828	MAN GATE VALV-UTLTY	12610.00	CS PIPING (1.5.2)
63	FW829	MOTOR GATE VALV-UTLTY	910.00	CS PIPING (1.5.2)
64	FW834	MAIN GLOBE VALV-UTLTY	6500.00	CS PIPING (1.5.2)
65	FW840	CERAMIV VALVES	260.00	CS PIPING (1.5.2)

66	FW841	CONTROL VALVES	910.00	CS PIPING (1.5.2)
67	FW842	MAN PINCH VALV-GYP SLRY	520.00	CS PIPING (1.5.2)
68	FW845	BALL VALVES- WATER	390.00	CS PIPING (1.5.2)
69	FW848	CHECK VALVES- WATER	1040.00	CS PIPING (1.5.2)
70	FW851	DIAPHRAGM VALV-SLURRY	1170.00	CS PIPING (1.5.2)
71	FW841	CONTROL VALVES	910.00	CS PIPING (1.5.2)
72	FW842	MAN PINCH VALV-GYP SLRY	520.00	CS PIPING (1.5.2)
73	FW845	BALL VALVES- WATER	390.00	CS PIPING (1.5.2)
74	FW848	CHECK VALVES- WATER	1040.00	CS PIPING (1.5.2)
75	FW851	DIAPHRAGM VALV-SLURRY	1170.00	CS PIPING (1.5.2)
	TOTAL WEIGHT OF COMMON SYSTEM (MT)		**11865.4**	

Annexure-V

PEM Supplied BOIs Detail (only Mechanical)					
Sl. No.	Item Description	UOM	Total Qty.	Total Weight in Tonnes	Category/Sub group
1	ACW PUMPS (Hor)	Nos.	4	3	ROTATING MACHINE (1.3)
2	ECW PUMPS (Hor)	Nos.	4	3	ROTATING MACHINE (1.3)
3	Self Cleaning Strainers	Nos.	2	3	Misc. Equpt./Str steel (1.6)
4	Conical Strainers (250NB)	Nos.	4	1.2	Misc. Equpt./Str steel (1.6)
5	Heat Exchangers (Plate type)	Nos.	4	6	Misc. Equpt./Str steel (1.6)
6	NaOH Dosing System	Nos	1	0.75	Misc. Equpt./Str steel (1.6)
7	ELECTRIC HOIST	Nos	1	2	Misc. Equpt./Str steel (1.6)
8	CHAIN PULLEY BLOCK	Nos	1	0.5	Misc. Equpt./Str steel (1.6)
	Total Weight of PEM Supplies (MT)			19.45	

Annexure-VI

D	Weight Schedule of Pipes (PC-Chennai)				
SL NO.	PG	MA	MARK NO./DESCRIPTION	WEIGHT (Kg)	Category/Sub group
1	80	660	PIPE OD219.1 X 6.0 EP STY-D; D1-207.1	3,468.300	CS PIPING (1.5.2)
2	80	660	PIPE NB100X5.4 BL EP STY-D; D1-105.3	5,760.000	CS PIPING (1.5.2)
3	80	660	PIPE NB80X 4.8 BL EP STY-D; D1-80.8	1,010.000	CS PIPING (1.5.2)
4	80	660	PIPE NB50X4.50 BL EP STY-D; D1-52.7	92.550	CS PIPING (1.5.2)
5	80	660	PIPE OD219.1 X 6.0 EP STY-D; D1-207.1	1,261.200	CS PIPING (1.5.2)
6	80	660	PIPE NB150X5.4 BL EP STY-D; D1-156.8	636.000	CS PIPING (1.5.2)
7	80	663	PIPE OD219.1 X 6.0 EP STY-D; D1-207.1	21,125.100	CS PIPING (1.5.2)
8	80	663	PIPE NB150X5.4 BL EP STY-D; D1-156.8	11,024.000	CS PIPING (1.5.2)
9	80	663	PIPE NB80X 4.8 BL EP STY-D; D1-80.8	1,010.000	CS PIPING (1.5.2)
10	80	663	ERW PIPE OD88.9X3.05 EP STY D;D1=82.8	96.900	SS PIPING (1.5.1)
11	80	663	PIPE DIA 60.3 X 3.91 EP@SITE	9,139.200	SS PIPING (1.5.1)
12	80	663	PIPE DIA 33.4 X 3.38 EP@SITE	50.000	SS PIPING (1.5.1)
13	80	663	PIPE OD219.1 X 6.0 EP STY-D; D1-207.1	1,261.200	CS PIPING (1.5.2)
14	80	663	PIPE NB150X5.4 BL EP STY-D; D1-156.8	636.000	CS PIPING (1.5.2)
15	80	663	PIPE NB80X 4.8 BL EPSTY-D;D1-80.8	60.600	CS PIPING (1.5.2)
16	80	948	ANGLE 50X50X6	900.000	CS PIPING (1.5.2)
17	80	948	ANGLE 65X65X6	2,320.000	CS PIPING (1.5.2)
18	80	948	ISMC 200X75 (SP LEN NOT LESS THAN 5M)	557.500	CS PIPING (1.5.2)
19	80	948	ISMC 150X75 (SP LEN NOT LESS THAN 5M)	1,680.000	CS PIPING (1.5.2)
20	80	948	ISMC 100X50 (SP LEN NOT LESS THAN 5M)	1,912.000	CS PIPING (1.5.2)
21	80	948	PLATE 10 MM	392.500	CS PIPING (1.5.2)
22	80	948	BEAM 125X70 (SP LEN NOT LESS THAN 5M)	1,340.000	CS PIPING (1.5.2)
TOTAL WEIGHT OF PIPING CENTRE - CHENNAI SUPPLIES (MT)				66	

Annexure-VII

E. Weight Schedule of Motors (Bhopal)

SL NO.	Item description	Qty	Unit	Approx. dimen. (L X W X H) (in mtr)	Approx unit wt. (MT)	Total weight (MT)	Category/Sub group
1	Booster Fan Motor	6	No.	3.95 x 3.17 x 3.425	19	114	ROTATING MACHINE (1.3)
2	RC Pump Motor	18	No.	1.9 x 1.5 x 1	13	234	ROTATING MACHINE (1.3)
3	Oxidation Blower	6	No.	1.9 x 1.5 x 1	4.3	25.8	ROTATING MACHINE (1.3)
4	Wet Ball Mill Motor	2	No.	1.9 x 1.5 x 1	9.2	18.4	ROTATING MACHINE (1.3)
5	Hammer Mill / Crusher Motor	2	No.	1.9 x 1.5 x 1	2.7	5.4	ROTATING MACHINE (1.3)
TOTAL WEIGHT OF BHOPAL SUPPLIES (MT)						397.6	

Annexure-VIII

F	BOQ of the Fire Protection System (BHEL PESD, Hyderabad supply)					
	Description	Weight in MT		Category/Sub group of Rate Sch.		
F1	CS piping (A/G) along with valves, fittings etc. including fire protection piping	98		CS PIPING (1.5.2)		
F2	Buried CS Piping (Wrapping & Coating)	9		CS BURIED PIPING (1.5.3)		
F3	Misc. Equpt./Str steel/ etc.	6		Misc. Equpt./Str steel (1.6)		
	Total weight under PESD supplies	113				
A	HYDRANT SYSTEM					
Sl. No.	Description	Unit	Quantity	Unit Weight (kg)	Total weight (Tonnes)	Category/Sub group of Rate Sch.
1	Mild steel, Black ERW to IS:1239, Part-I, medium grade					
1.1	150 mm dia	Mts	80	18.9	1.512	CS BURIED PIPING (1.5.3)
1.2	100 mm dia	Mts	360	12.2	4.392	CS BURIED PIPING (1.5.3)
1.3	80 mm dia	Mts	360	8.36	3.0096	CS BURIED PIPING (1.5.3)
2	Mild steel, Black, ERW to IS:3589, Gr. Fe 410					
2.1	200 mm dia	Mts	2400	33.1	79.44	CS PIPING (1.5.2)
3	SS Hydrant Valve	No.	50	20	1	CS PIPING (1.5.2)
4	Air Release Valve					
4.1	25 mm dia	No.	10	5	0.05	CS PIPING (1.5.2)
5	Gun Metal Valve					
5.1	25 mm dia	No.	10	5	0.05	CS PIPING (1.5.2)
6	Drain Valve	No.		1		CS PIPING (1.5.2)
7	Hose Reel (15 M lenght)	No.	80	20	1.6	Misc. Equpt./Str steel (1.6)
8	Hose Reel (7.5 M lenght)	No.	30	10	0.3	Misc. Equpt./Str steel (1.6)

9	Hose Box					
9.1	External + Internal	No.	35	15	0.525	Misc. Equpt./Str steel (1.6)
10	Branch Pipe with Nozzle	No.	35	10	0.35	CS PIPING (1.5.2)
11	Gate Valve (CI -valve)					CS PIPING (1.5.2)
11.1	150 mm dia	No.	20	76.48	1.5296	CS PIPING (1.5.2)
11.2	100 mm dia	No.	20	43.88	0.8776	CS PIPING (1.5.2)
11.3	80 mm dia	No.	6	27.09	0.16254	CS PIPING (1.5.2)
12	Structural Steel	lot	1	1000	1	Misc. Equpt./Str steel (1.6)
13	M.S Fittings	lot	1	2000	2	CS PIPING (1.5.2)
14	Water Monitor	No.	6	30	0.18	Misc. Equpt./Str steel (1.6)
15	Wrapping and coating of UG pipe (150NB Pipe)	sqmt	50	0.5	0.025	CS BURIED PIPING (1.5.3)
16	Butterfly valve 100 NB	No.	6	8.63	0.05178	CS PIPING (1.5.2)
B	HVWS SYSTEM					
1	Deluge Valve along with Gate valve, Strainer, nozzles, GI Pipe, solenoid valve, etc. for OPU unit and Transformer					
1.1	100 mm dia	No.	4	97	0.39	CS PIPING (1.5.2)
2	ERW G.I. Pipe as Per IS:1239 Medium grade					
2.1	150 NB	Mtrs	250	18.9	4.73	CS PIPING (1.5.2)
3	ERW, MS black pipe as Per IS:1239 Heavy Class					CS PIPING (1.5.2)
3.1	25 NB	Mtrs	150	3	0.45	CS PIPING (1.5.2)
4	Cast iron Rising spindle Type Gate Valve					CS PIPING (1.5.2)
4.1	200 NB	No.	4	126.17	0.50	CS PIPING (1.5.2)
5	Cast iron wafer Butterfly Valve					CS PIPING (1.5.2)
5.1	200 NB	No.	4	21.36	0.09	CS PIPING (1.5.2)
5.2	150 NB	No.	4	13.18	0.05	CS PIPING (1.5.2)
6	M.S Y- Type Strainer					
6.1	200 NB	No.	8	25	0.20	CS PIPING (1.5.2)
7	Spray Nozzle - Stainless Steel	No.	125	0.125	0.02	Misc. Equpt./Str steel (1.6)
8	Q.B Detector - 79 ˚	No.	125	0.1	0.01	Misc. Equpt./Str steel (1.6)
10	Solenoid Valve	No.	4	0.2	0.001	CS PIPING (1.5.2)
11	Local Control panel for Deluge Valve	No.	4	20	0.08	CS PIPING (1.5.2)
12	SS orifice plate					
12.1	100 NB	No.	2	2	0.004	Misc. Equpt./Str steel (1.6)
13	Structural Steel	Lot	0.8	1000	0.80	Misc. Equpt./Str steel (1.6)
14	Pipe Fittings	Lot	0.6	1000	0.60	CS PIPING (1.5.2)
15	Flanges, nut blot & gasket	Lot	0.6	1000	0.60	CS PIPING (1.5.2)
16	Pipe clamps	Lot	0.5	1000	0.50	CS PIPING (1.5.2)

C	MVWS SYSTEM					
1	Deluge Valve along with Gate valve, Strainer, nozzles, GI Pipe, solenoid valve, etc. for OPU unit and Transformer					
1.1	100 mm dia	No.	4	97	0.39	CS PIPING (1.5.2)
2	ERW G.I. Pipe as Per IS:1239 Medium grade					
2.1	25 NB pipe	Mtrs	400	2.5	1.00	CS PIPING (1.5.2)
2.2	32 NB pipe	Mtrs				
2.3	40 NB pipe	Mtrs				
2.4	50 NB pipe	Mtrs				
2.5	65 NB pipe	Mtrs				
2.6	80 NB pipe	Mtrs				
2.7	150 NB pipe	Mtrs	36	18.9	0.68	
3	ERW, MS black pipe as Per IS:1239 Heavy Class					CS PIPING (1.5.2)
3.1	80 NB pipe	Mtrs	24	10	0.24	CS PIPING (1.5.2)
3.2	100 NB pipe	Mtrs	24	15	0.36	
4	Cast iron Rising spindle Type Gate Valve					CS PIPING (1.5.2)
4.1	200 NB	No.	8	44	0.35	
5	Cast iron wafer Butterfly Valve					CS PIPING (1.5.2)
5.1	200 NB	No.	8	21.36	0.17	Misc. Equpt./Str steel (1.6)
5.2	150 NB	No.	8	13.18	0.11	CS PIPING (1.5.2)
6	M.S Y- Type Strainer					
6.1	200 NB	No.	8	25	0.20	Misc. Equpt./Str steel (1.6)
7	Spray Nozzle - Stainless Steel	No.	350	0.125	0.04	Misc. Equpt./Str steel (1.6)
8	Q.B Detector - 79 ˚	No.		0.1	0.000	Misc. Equpt./Str steel (1.6)
9						
10	Solenoid Valve	No.	4	0.2	0.001	CS PIPING (1.5.2)
11	Local Control panel for Deluge Valve	No.	4	20	0.08	CS PIPING (1.5.2)
12	SS orifice plate					
13	100 NB	No.				Misc. Equpt./Str steel (1.6)
14	Structural Steel	Lot	1	1000	1.00	Misc. Equpt./Str steel (1.6)
15	Pipe Fittings	Lot	0.7	1000	0.70	CS PIPING (1.5.2)
16	Flanges, nut blot & gasket	Lot	0.7	1000	0.70	CS PIPING (1.5.2)
17	Pipe clamps	Lot	0.7	1000	0.70	CS PIPING (1.5.2)
D	PORTABLE FIRE EXTINGUISHERS					
1	Hand held portable pressurized water CO2 - 9litres	No.	5	15	0.08	Misc. Equpt./Str steel (1.6)
2	4.5 kg CO2	No.	5	14	0.07	Misc. Equpt./Str steel (1.6)
3	6kg DCP	No.	5	10	0.05	Misc. Equpt./Str steel (1.6)

Annexure-IX

	G BOQ of VARIOUS VALVES (BHEL Trichy -Valves supply)				
	Valve Description	Qty.	Unit Wt.	Total Wt.	Category/Sub group of Rate Sch.
	(Size-Class rating-Type-End connection-Operation-Material)		(kg)	(kg)	
80-277	1-C800-CV-SW-F316-SST	1	2.3	2.3	CS PIPING (1.5.2)
80-277	1-C800-SV-SW-HO-A105-SST	23	3.4	78.2	
80-277	1-C800-SV-SW-HO-F316-SST	3	3.4	10.2	
80-277	2-C800-GV-SW-HO-A105	1	8	8	
80-277	2-C800-SV-SW-HO-F316-SST	4	11.1	44.4	
80-277	3-C300-SV-FL-HO-WCB	1	76	76	
80-277	6-C150-GV-FL-HO-WCB	16	76	1216	
80-277	6-C300-FV-FL-WCB	8	134	1072	
80-277	8-C150-GV-FL-HO-WCB	5	119	595	
80-277	8-C300-SV-FL-HO-WCB	1	283	283	
80-277	2-C800-SV-SW-MO-F316	2	59	118	
80-277	3-C150-GV-FL-MO-WCB	1	68	68	
80-277	3-C300-SV-FL-MO-WCB	3	113	339	
80-277	6-C150-GV-FL-MO-WCB	16	126	2016	
80-277	1/2-C800-SV-SW-HO-A105-SST	120	1.6	192	
80-277	1/2-C800-SV-SW-HO-F316-SST	2	1.6	3.2	
	TOTAL			6121.3	Around 6 MT

Annexure-X

(BILLING SCHEDULE)							
85% of Unit Rate (Applicable for ITEM No: 1.1, 1.2, 1.3, 1.4, 1.5.1, 1.5.2, 1.5.3 & 1.6 of Rate Schedule.							
Sl No	Activity	For item No: 1.1 (Str. & Duct / Dampers)	For item No: 1.2 (Tanks)	For item No: 1.3 (Rotating Machines)	For item No: 1.4 (Insulation)	For item No: 1.5.1, 1.5.2 & 1.5.3 (Piping)	For item No: 1.6 (Misc Equipment / Strl Steel)
1	Completion of Preassembly, (if not applicable this portion shall be clubbed with Placement in position)	20%	20%	20%		20%	20%
2	Placement in position	25%	20%	20%	50%	20%	25%
3	Alignment	20%	10%	20%		10%	20%
4	Welding/Bolting/ Fixing as required.	15%	20%	20%	35%	15%	15%
5	Completion of Non Destructive Examination & Stress relieving	5%	10%	5%		10%	5%

	/heat treatment, (if not applicable, then this portion to be paid along with welding)						
6	H&S wherever applicable as per drawing					5%	
7	Hydro Test of Piping/Water Fill Test/ Vacuum Box test of Tanks/Holiday test (as applicable)		5%			5%	
	TOTAL FOR PRORATA PAYMENTS	85%	85%	85%	85%	85%	85%

STAGE/ MILESTONE PAYMENTS (15%)			
1	Completion of air & Gas tightness test for Ducts	3 X 0.50%	1.5%
2	Completion of Trial Run of Slurry Pumps	--	1.0%
3	Trial Run of Wet Ball Mills	3 X 0.50%	1.5%
4	Trial Run of Booster Fans	6 X 0.25%	1.5%
5	Trial Run of Oxidation Blower	6 X 0.25%	1.5%
6	Trial Run of FGD System	3 X 1.00%	3.0%
7	Completion of Painting	--	2.0%
8	Area Cleaning, Temporary Structures Cutting/Removal and return of Scrap	--	1.0%
9	Liquidation of Pending Points	--	1.0%
10	Completion of all Contractual Obligation and demobilization of site office.	--	1.0%
	TOTAL	--	15%
On completion of the PG test of each unit which is to be certified by the BHEL (ITEM NO. 1.7 OF RATE SCHEDULE) ALLOTED PERCENTAGE = 100%			
NOTES			
1	BHEL-Site, at their discretion, may further split up above percentages and effect payment to suit the site condition, cash flow requirement and according to the progress of work.		
2	The billing break-up is drawn for progressive payment and shall not be construed as the value/ price of corresponding item, unless otherwise decided by BHEL.		

CONTENTS

SN	DESCRIPTION	Chapter	No. OF PAGES
1	General Intent of the Specifications	Chapter-I	
2	General Services to be rendered by the Bidder	Chapter-II	
3	General Technical Requirements (Codes and Standards)	Chapter-III	
4	Obligations of Contractor (In respect of Tools, Tackles, Consumables, etc employment of supervisory staff and workmen)	Chapter-IV	
5	Responsibilities of Contractor (In respect of employment of Labour, Supervisory staff, etc)	Chapter-V	
6	Material Handling, Storage, Preservation, etc	Chapter-VI	
7	Drawings and Documents	Chapter-VII	
8	Inspection and Quality	Chapter-VIII	
9	HSE & OHSAS Obligations	Chapter-IX	
10	RA Bill Payment	Chapter-X	
11	Performance Monitoring	Chapter-XI	
12	Suspension of Business Dealings	Chapter-XII	

1.0	INTENT OF THE SPECIFICATION
1.1	The intent of this erection specification is to provide services for execution of the project according to most modern and proven techniques and codes. The omission of specific reference to any method, equipment or material necessary for the proper and efficient services towards installation of the plant shall not relieve the contractor of the responsibility of providing such services / facilities to complete the work or portion of work awarded to him. The quoted / accepted rates / price shall deem to be inclusive of all such contingencies.
1.2	The work shall conform to dimensions and tolerances given in various drawings and documents that will be provided during erection. If any portion of works is found to be defective in workmanship and not conforming to drawings / documents or other stipulations, the contractor shall dismantle and re-do the work duly replacing the defective materials at their own cost, failing which recoveries, as determined by BHEL, shall be effected from contractor's bills.
1.3	It is not the intent of this specification to specify herein all the details of erection and commissioning. However, the system shall conform in all respects to high standards of quality and workmanship for performing the required duties in a manner acceptable to purchaser who will interpret the meaning of drawings and specifications and shall be entitled to reject any work or material, which in his judgments is not in full accordance herewith.
1.4	The omission of specific reference to any fabrication / erection or other method, equipment or material necessary for proper and efficient working of the plant shall not relieve the tenderer of the responsibility of providing such facilities to complete the work at quoted rates. Any mismatch/ defect found due to mistake in fabrication / erection shall have to be rectified by the vendor free of cost. Inspection by BHEL/Customer does not relieve vendor of his responsibility of executing quality erection.
1.5	The work covered under this specification is of highly sophisticated nature, requiring the best quality workmanship, supervision, engineering and construction management. The contractor should ensure proper planning and successful and timely completion of the work to meet the overall project schedule. The contractor must deploy adequate quantity of tools & plants, modern / latest construction aids etc. He must also deploy adequate trained, qualified and experienced supervisory staff and skilled personnel.

1.6	Contractor shall erect and commission all the equipments and auxiliaries as per the sequence & methodology prescribed by BHEL depending upon the technical requirements. Availability of materials and fronts will decide this. BHEL Engineer's decision regarding correctness of the work and method of working shall be final and binding on the contractor. No claims for extra payment from the contractor will be entertained on the ground of deviation from the methods / sequence adopted in erection of similar sets elsewhere.
1.7	Following shall be the minimum responsibility of contractor and have to be provided within finally accepted rates / prices:
1.7.1	Provision as required of all types of labour, supervisors, engineers, watch and ward, tools & tackles, calibrated MMEs (Monitoring and Measuring Equipment) as specified and otherwise required for the work, consumables for erection, testing and commissioning including material handling
1.7.2	Achieving Proper out-turn / Turn-over as per BHEL plan and commitment.
1.7.3	Completion of work as per BHEL Schedule
1.7.4	Good quality and accurate workmanship for proper performance of the equipment
1.7.5	Repair and rectification
1.7.6	Preservation / Re-conservation of all components during storage / erection / commissioning till handing over.

2.0	GENERAL SERVICES TO BE RENDERED BY THE BIDDER
2.1	Services for construction, fabrication, equipment erection testing as well as trial run & commissioning of various equipment and accessories under the contract shall include but not be limited to the following:
2.2	Issuing materials from store/open yard from time to time for erection as per the construction programme. The Contractor shall be the custodian of all the materials issued till the plant/equipment is officially taken over by the owner / BHEL after complete erection any successful trial run & commissioning.
2.3	Transport of material to their respective places of erection and erection of the complete plant & equipment as supplied under this specification.
2.4	Trial run and commissioning of individual equipment / sub-systems to the satisfaction of Owner/BHEL.
2.5	Deployment of all skilled and unskilled manpower required for erection, supervision of erection, watch & ward, commissioning and other services to the rendered under this specification.
2.6	Deployment of all erection tools & tackle, construction machinery, transportation vehicles and all other implements in adequate number and size, appropriate for the erection work to be handled under scope of this specification except otherwise specified.
2.7	Supply of all consumables, eg welding electrodes, cleaning agents, diesel oil, lubricant etc as well as materials required for temporary supports, scaffolding etc as necessary for such erection work, unless specified other wise.
2.8	Providing support services for the contractor's erection staff eg construction of site offices, temporary stores, residential accommodation and transport to work site for erection personnel, watch and ward for security and safety of the materials under the Contractor's custody etc. as required.
2.9	Maintaining proper documentation of all the site activities undertaken by the Contractor as per the proforma mutually agreed with BHEL, Submission of monthly progress reports and any such document as and when desired by BHEL/owner, taking approval of all statutory authorities i.e Boiler Inspector, Factory Inspector, Inspector of Explosives etc , as applicable for respective portions of work fall under the jurisdiction of such statutes of laws.
2.10	Any other service, although not specifically called for but required for a contract of the size and nature indicated in the specification.

3.0	GENERAL TECHNICAL REQUIREMENTS (CODES AND STANDARDS)
3.1	Except where otherwise specified, the plant/equipment shall comply with the appropriate Indian Standard or an agreed internationally accepted Standard Specification as mentioned elsewhere in contract specifications, each incorporating the latest revisions at the time of tendering. Where no internationally accepted standard is applicable, the Bidder shall give all particulars and details as necessary, to enable BHEL to identify all of the plant/equipment in the same detail as would be possible had there been a Standard Specification.
3.2	Where the Bidder proposes alternative codes or standards he shall include in his tender one copy (in English) of each Standard Specification to which materials offered shall comply. In such case, the adopted alternative standard shall be equivalent or superior to the standards mentioned in the specification.
3.3	In the event of any conflict between the codes and standards referred above, and the requirements of this specification, the requirements which are more stringent shall govern.
3.4	Tools used during erection and commissioning shall not be accepted except with the specific approval of the Engineer.

4.0	OBLIGATIONS OF CONTRACTOR
4.1	CONSUMABLES & OTHER ITEMS
4.1.1	The contractor shall provide within finally accepted price / rates, all consumables (excepting those indicated in BHEL scope) like welding electrodes (including alloy steel and stainless steel), filler wires, TIG filler wires (over & above as supplied by the unit along with the plant materials, which will be given free of cost to bidder), gases (inert, welding, cutting), soldering material, dye penetrants, radiography films, etc. Other erection consumables such as tapes, jointing compound, grease, mobile oil, M-seal, Araldite, petrol, CTC / other cleaning agents, grinding and cutting wheels are to be provided by the contractor. Steel, packers, shims, wooden planks, scaffolding materials hardware items etc required for temporary works such as supports, scaffoldings are to be arranged by the contractor. Sealing compounds, gaskets, gland packing, wooden/concrete sleepers, for temporary work, required for completion of work except those which are specifically supplied by manufacturing unit are also to be arranged by the contractor.
4.1.2	All the shims, gaskets and packing, which go finally as part of plant equipment, shall be supplied by BHEL free of cost.
4.1.3	It shall be the responsibility of the contractor to plan the activities and store sufficient quantity of consumables. Non-availability of any consumable materials or equivalent suggested by BHEL cannot be considered as reason for not attaining the required progress or for additional claim.
4.1.4	<u>TIG Filler wire for Boiler and Filler wires for Electrodes for P91/T91 piping:</u> These shall be supplied by BHEL free of cost as supplied by BHEL Manufacturing Units as part of regular supply. Required quantity as arrived at by calculation / standards will only be supplied. It would be the contractors' responsibility to account for the consumption of these filler wires. Additional consumption beyond standard / calculated quantity will be at cost recovery basis only unless and otherwise accounted for. Surplus quantity of TIG filler wire, if any, shall be properly stored and returned to BHEL stores.
4.1.5	It shall be the responsibility of the contractor to obtain prior approval of BHEL, regarding suppliers, type of electrodes etc before procurement of welding electrodes. On receipt of electrodes at site these shall be subjected to inspection and approval by BHEL. The contractor shall inform BHEL details regarding type of electrodes, batch number, date of expiry etc and produce test certificate for each lot / batch with correlation of batch / lot number with respective test certificate. No

	electrode without a valid test certificate will to be used.
4.1.6	BHEL reserves the right to reject the use of any consumable including electrodes, gases, lubricants / special consumables if it is not found to be of the required standard / make / purity or when shelf life has expired. Contractor shall ensure display of shelf life on consumable wherever required and records maintained.
4.1.7	Storage of all consumables including welding electrodes shall be done as per requirement / instruction of the Engineer by the contractor at his cost.
4.1.8	In case of improper arrangement for procurement of any consumable, BHEL reserves the right to procure the same from any source and recover the cost from the Contractor's first subsequent bill at market value plus the departmental charges of BHEL from time to time. Postponement of such recovery is normally not permitted. The decision of Engineer in this regard shall be final and binding on the Contractor.
4.1.9	All lubricants and chemicals required for pre-commissioning, commissioning, testing, preservation and lubricants for trial runs of the equipment shall be supplied by BHEL / BHEL's client. All services including labour and T&P will be provided by the contractor for handling, filling, emptying, refilling etc. The consumption of lubricants / chemicals shall be properly accounted for. Surplus material if any shall be properly stacked/tagged and returned to BHEL/ CUSTOMER stores at no extra cost to BHEL. BHEL reserves the right to recover costs for wastage by the contractor.
4.1.10	Transportation of oil drums, from stores, filling of oil for flushing, first filling, subsequent changeover if any, topping/making up till the unit is fully commissioned and handed over to customer is included in scope of this contract. The contractor shall have to return all the empty drums to BHEL / BHEL's client store at no extra cost. Any loss / damage to above drums shall be to contractor's account.
4.1.11	All charges on account of Octroi, terminal or sales tax and other duties on materials obtained from any source for carrying out the works in the scope of the contractor shall be borne by the contractor.
4.2	TOOLS AND PLANTS / MONITORING AND MEASURING EQUIPMENT (MMEs)
4.2.1	T&Ps and MMEs to be provided by Contractor
4.2.1.1	All T&Ps and MMEs excepting those specifically indicated in BHEL scope are to be provided by the Contractor. Contractor has to make his own arrangement at his cost for completing the formalities (including arrangement of Road permits, if any) if required with Sales Tax/VAT authorities, for bringing their materials, plants and

	equipments at site for the execution of work under this contract.
4.2.1.2	All suitable cranes, lifting and transport equipments for material handling at stores/yard/siding of BHEL/Customer are included in scope. BHEL's cranes will not be available for this purpose unless otherwise specifically permitted as per contract conditions
4.2.1.3	All T&Ps to be deployed by the contractor shall have the approval of BHEL Engineer with regard to brand, quality and specification.
4.2.1.4	Indicative list of Major T&Ps in the scope of Contractor are given in the Technical Conditions of Contract. Bidders to note that these are only indicative and as such all other T&P necessary for timely and satisfactory completion of work in scope shall be mobilized by Contractor
4.2.1.5	Timely deployment of adequate T&Ps is the responsibility of the contractor. The contractor shall be prepared to augment the T&P at short notice to match the planned programme and to achieve the milestones.
4.2.1.6	Contractor shall maintain and operate his tools and plants in such a way that major breakdowns are avoided. In the event of major breakdown, contractor shall make alternative arrangements expeditiously so that the progress of work is not hampered.
4.2.1.7	In the event of contractor failing to arrange the required tools, plants, machinery, equipment, material or non-availability of the same owing to breakdown, BHEL will make alternative arrangement at the risk and cost of the contractor. Decision of BHEL shall be final and binding on the contractor
4.2.1.8	The T&P to be arranged by the contractor shall be in proper working condition and their operation shall not lead to unsafe condition. The movements of cranes, and other equipment should be such that no damage / breakage occurs to foundations, other equipments, material, property and men. All arrangements for the movement of the T&P etc shall be the contractor's responsibility.
4.2.1.9	Use of welding generators/ rectifiers only shall be permitted for welding. Use of welding transformers will be subject to specific approval of BHEL engineer.
4.2.1.10	The contractor at his cost shall carry out periodical testing of his construction equipments. Test certificates shall be furnished to BHEL.
4.2.1.11	Contractor shall ensure deployment of serviced and healthy T&Ps including cranes, lifting tackles, wire ropes, manila ropes, winches and slings etc. History card and maintenance records for major T&Ps will be maintained by the contractor and will be made available to BHEL Engineer for inspection as and when required.

	Fitness certificate / Test Certificates of T&P shall have to be submitted before it is put in use. Identification for such T&Ps will be done as per BHEL Engineer's advice. BHEL reserves the right to permit only new slings up to 20 mm and lifting tackles up to 3 MT capacities.
4.2.1.12	Contractor shall ensure deployment of reliable and calibrated MMEs (Inspection measuring and Monitoring equipment). The MMEs shall have test / calibration certificates from authorized / Government approved / accredited agencies traceable to National / International standards. Each MME shall have a label indicating calibration status i.e. date of calibration, calibration agency and due date for calibration. A list of such instruments deployed by contractor at site with its calibration status is to be submitted to BHEL Engineer for control.
4.2.1.13	Re-testing / re-calibration shall also be arranged at regular intervals during the period of use as advised by BHEL Engineer within the contract price. The contractor will also have alternate arrangements for such MME so that work does not suffer when the particular instrument is sent for calibration. If any MMEs not found fit for use, BHEL shall have the right to stop the use of such item. It will be necessary for the contractor to deploy proper item. Any readings taken by the defective instrument will be recalled and repeat the readings taken by that instrument with a proper one. In case he fails to do so, BHEL may deploy MMEs and retake the readings at contractor's cost.
4.2.1.14	BHEL shall have lien on all T&P, MMEs and other equipment of the contractor brought to the site for the purpose of erection, testing and commissioning. BHEL shall continue to hold the lien on all such items throughout the period of contract / extended period. The contractor and / or his sub-contractors, without the prior written approval of the Engineer, shall remove no material brought to the site.
4.2.1.15	The month wise T&P deployment plan to execute the work is to be submitted as per relevant format as per the instruction of BHEL. It shall be the contractor's responsibility to deploy the required T&P, for timely and successful completion of the job, to any extent.
4.2.2	Obligations in respect of T&Ps and MMEs provided by BHEL
4.2.2.1	T&P / MMEs being provided by BHEL to sub-contractor free of hire charges shall be shared by other subcontractors working for BHEL at site and the allotment done by BHEL Engineer shall be final and binding.
4.2.2.2	BHEL T&P will be issued in basic assembled condition. Additional loose components / sub-assemblies / attachments as and when necessary, will be

	issued by BHEL. Assembly of such additional loose components/sub-assemblies/ attachments is in contractor's scope.
4.2.2.3	In case of non-availability of the T&Ps to be provided by BHEL due to breakdown, major overhauls, distribution pattern or any other reason, the contractor shall plan / amend / alter his activities to meet erection / commissioning targets in consultation with BHEL.
4.2.2.4	void
4.2.2.5	The contractor shall engage trained and experienced operators for the operation of BHEL's T&Ps. Their skill / performance will be checked by BHEL Engineer before they are allowed to operate the same. However checking of skills by BHEL does not absolve the contractor of his responsibilities for proper and safe handling of equipment, consistent good performance of operators and regular performance evaluation of operators.
4.2.2.6	The day to day operation and maintenance of BHEL's T&Ps (Other than cranes) shall be carried out by contractor as per manufacturer's / BHEL's maintenance schedule at his cost. The contractor shall arrange, at his own cost, trained operators, fuel and other consumables for their operation.BHEL shall arrange all spares needed for upkeep of major T&Ps provided like Huck Bolting Machine*, DG Set, Induction Machine and Hydraulic Test pumps. The contractor has to arrange for fixing of the spares; supervision in specialized cases will be provided by BHEL. For upkeep of all other T&Ps supplied by BHEL, spares shall be arranged by the Contractor. BHEL supplied T&Ps shall be maintained in good working condition during the entire period of use. T&Ps in defective / damaged condition shall be rectified promptly to the full satisfaction of BHEL engineer. Contractor shall maintain records for maintenance of major T&Ps. These shall be made available for Inspection whenever required. In case of any lapses on the part of the contractor, BHEL at its own discretion shall get the servicing / repair of equipment done at the risk and cost of the contractor along with BHEL overheads. Further, if there are breakdowns / damages due to negligence of the contractor, the complete service / repair charges and cost of all the spares damaged with BHEL overheads shall be recovered from contractor's RA bills. *: for operation and maintenance of ESP Huck bolting machine, BHEL shall provide the basic power rig and hose. Balance toolingsie Guns, chuck jaws etc are to be arranged by contractor.
4.2.2.7	void

4.2.2.8	Increasing / shortening of the crane boom to suit work requirements shall have to be arranged by the indenting contractor at his cost including restoration to a state as directed by BHEL. All necessary manpower tools, support, consumables, illumination etc. will have to be arranged by contractor at his cost. If required, contractor has to return the crane with original boom.
4.2.2.9	The area and infrastructure development of the area to be carried out by the customer. However in construction projects of this magnitude it is possible that all the areas / approaches may not be ready. In such cases backfilling of approaches where ever necessary, consolidation of ground and arrangement of sleepers / sand bag filling etc for safe operation / movement of equipment including cranes / trailers etc shall be the responsibility of the contractor at his cost. No compensation on this account shall be payable.
4.2.2.10	In the event of contractor not using and maintaining BHEL T&Ps according to BHEL's instructions. BHEL will have the right to withdraw such item without any notice and no claim in this regard shall be entertained and contractor shall be responsible for delay in execution on this account.
4.2.2.11	The contractor shall furnish regular utilization report of the BHEL T&Ps, as per requirement of BHEL.
4.2.2.12	Any loss / damage to any part of BHEL T&Ps and MMEs shall be to the contractor's account and any expenditure on these accounts by BHEL will be recovered from the contractor's bill in case the contractor fails to make good the loss.
4.2.2.13	It shall be responsibility of the contractor to take delivery of T&Ps and MMEs from stores or place of use by other contractor at project site, transport the same to site and return the same to BHEL store / place as intimated by Engineer in project site in good working conditions after use.
4.2.2.14	The contractor shall return BHEL T&Ps and MMEs issued to him in good working condition as and when desired by BHEL (on completion or reduction of workload). If contractor delays return of T&P and MME, hire charges as applicable shall be levied by BHEL from time, it was requisitioned till the time of actual return. T&Ps and MMEs returned in damaged / unserviceable condition shall be got repaired by BHEL at its own discretion and entire cost of repair with BHEL overheads shall be recovered from the contractor.
4.2.2.15	Replacement cost including BHEL overheads in respect of irreparable / completely damaged / non return of T&Ps and MMEs shall be recovered from the

	contractor's running / final bills
4.2.2.16	Obligations in respect of Cranes provided by BHEL
a)	BHEL will make available the cranes (as per Technical Conditions of Contract) free of charge to the contractor on sharing basis mainly for the purposes enumerated/indicated therein. BHEL cranes have to be shared with other agencies / contractors of BHEL. The allocation of cranes shall be the discretion of BHEL engineer, which shall be binding on the contractor.
b)	BHEL Cranes may be initially issued in basic assembled condition. Any alteration/addition like boom reduction / extension, assembly of components/sub-assemblies needed for modulating the capacity/reach/other features of cranes and restoration to the state as directed by BHEL shall be the contractor's responsibility.
c)	In case the BHEL cranes are not covered under AMC of BHEL, then the day-to-day upkeep and running maintenance like filling / topping up of lubricants, changing filters, etc including repair of self starter and dynamo of these cranes shall be the responsibility of the contractor.If on checking it is found that the same is not followed, BHEL will exercise its right to get the job/works done at the risk and cost of contactor. In case BHEL cranes are covered under AMC awarded by BHEL, then the day-to-day upkeep and running maintenance as described above are excluded from scope. However any additional helpers if any required during Preventive/Breakdown Maintenance, Assembly/disassembly shall be provided by contractor at no extra cost. BHEL may also provide cranes through crane hiring agencies in which case the day-to-day upkeep and running maintenance shall be excluded from scope of contractor.
d)	Minor consumables like cotton cloth, cotton waste, etc is to be supplied by Contractor. All spares and lubricants/grease is excluded from scope. Contractor to give the requirements of these items well in advance in case the cranes provided by BHEL are BHEL owned cranes.
e)	Unless otherwise specified, trained operators for BHEL owned cranes shall be provided by the contractor. These operators should possess valid license for heavy vehicle.
f)	BHEL cranes will be withdrawn for regular and capital maintenance as per the respective schedule of maintenance. As far as possible such schedules will be intimated to the contractor in advance and may be adjusted depending on the work

	requirements at site. However no claim whatsoever will be entertained on account of non-availability of cranes.
g)	Where the services of the cranes provided by BHEL are to be shared by other agencies/ contractors of BHEL, the contractor's responsibilities defined above will also be apportioned accordingly to the beneficiary agency. Working arrangements in this regard will be done at site by BHEL engineer and in any case his decision shall be final and binding.
h)	Major breakdowns will be attended to by BHEL. However, in case of breakdowns or damages due to negligence of the contractor, the complete service/repair charges including cost of spares shall be to the account of the contractor, along with BHEL overheads.
4.2.2.17	Obligations in respect of Construction Lift/Elevators provided by BHEL
a)	The total erection including commissioning, maintenance, statutory clearances shall be in included in scope of work. Supervision by the original equipment supplier or their authorized agency shall be arranged for by BHEL, in case found necessary.
b)	All day to day and routine maintenance and checking is to be carried out by the contractor as per the recommendations of the supplier. He should periodically check the brakes and carry out the all works to ensure the safety of all those using the lift/elevator. BHEL shall arrange spares required for upkeep of Construction lift/elevator
c)	The construction lift/elevator should never be overloaded as this can lead to serious accidents. Ensuring all safety aspects in operation of the lift shall be the responsibility of the contractor. Erection of all the required number of landing platforms is included in scope. Landing platforms are to be provided with proper barricades and hand railings.
d)	After completion of contractual scope of work or as per BHEL advice, the temporary elevator/lift shall be dismantled and handed over to BHEL neatly identified/tagged. Temporary structures/platforms etc erected for the elevators/lifts are also to be dismantled and materials to be returned to stores as applicable. The construction and dismantling of the foundations required for the construction/elevator lifts is includedin the scope of the contractor.

5.0	RESPONSIBILITIES OF CONTRACTOR IN RESPECT OF LABOUR, SUPERVISORY STAFF, ETC.
5.1	Refer relevant clauses of General Conditions of Contract (GCC) also in this regard
5.2	The contractor shall deploy all the necessary skilled/semiskilled/ unskilled labour including highly skilled workmen etc. These workmen should have previous experience on similar job. They shall hold valid certificates wherever necessary. BHEL reserves the right to insist on removal of any employee of the contractor at any time if he is found to be unsuitable and the contractor shall forthwith remove him.
5.3	Contractor shall also comply with the requirements of local authorities/ project authorities calling for police verification of antecedents of the workmen, staff etc.
5.4	It is the responsibility of the contractor to engage his workmen in shifts and or on overtime basis for achieving the targets set by BHEL. This target may be set to suit BHEL's commitments to its customer or to advance date of completion of events or due to other reasons. The decision of BHEL in regard to setting the erection and commissioning targets will be final and binding on the contractor.
5.5	Contractor shall provide at different elevation suitable arrangement for urinal and drinking water facility with necessary plumbing & disposal arrangement including construction of septic tank. These installations shall be maintained in hygienic condition at all times.
5.6	The Contractor in the event of engaging 20 or more workmen, shall obtain Independent license under the Contract labour (Regulation and Abolition) Act 1970 from the concerned authorities based on Form-V issued by the Principal Employer/Customer. In order to issue Form-V by Customer, Contractor shall fulfill all Statutory requirements like Insurance Policy, PF Code/PF Account number etc as per the requirement of BHEL/Customer
5.7	Contractor shall deduct the necessary amount towards Provident Fund and contribute equal amount as per Government of India laws. This amount will be deposited regularly to the provident Fund Commissioner. BHEL/Customer may insist for submission of the account code duly certified by PF Commissioner
5.8	Contractor may also be required to comply with provisions of ESI Act in vogue if applicable and submit evidence to BHEL.
5.9	BHEL / customer may insist for witnessing the regular payment to the labour. They may also like to verify the relevant records for compliance with statutory

	requirements. Contractor shall enable such facilities to BHEL / Customer.
5.10	Contractor shall deploy only qualified and experienced engineers/ supervisors. They shall have professional approach in executing the work.
5.11	The contractor's supervisory staff shall execute the work in the most professional manner in the stipulated time. Accuracy of work and aesthetic finish are essential part of this contract. They shall be responsible to ensure that the assembly and workmanship conform to dimensions and tolerances given in the drawings/instructions given by BHEL engineer from time to time.
5.12	The supervisory staff employed by the contractor shall ensure proper outturn of work and discipline on the part of the labour put on the job by the contractor. Also in general they should see that the works are carried out in a safe and proper manner and in coordination with other labour and staff employed directly by BHEL or other contractors of BHEL or BHEL's client.
5.13	It is the responsibility of the contractor to arrange gate pass for all his employees, T&P etc for entering the project premises. Necessary coordination with customer officials is the responsibility of the contractor. Contractor to follow all the procedures laid down by the customer for making gate passes. Where permitted, by customer / BHEL, to work beyond normal working hours, the contractor shall arrange necessary work permits for working beyond normal working hours.
5.14	The actual deployment will of Labour and Engineer/supervision staff shall be so as to satisfy the erection and commissioning targets set by BHEL. If at any time, it is found that the contractor is not in a position to deploy the required engineers/supervisors/workmen due to any reason, BHEL shall have the option to make alternate arrangements at the contractor's risk and cost.The expenditure incurred along with BHEL overheads thereon shall be recovered from the contractor
5.15	Contractor shall not deploy women labour at night.

6.0	MATERIAL HANDLING, STORAGE AND PRESERVATION ETC
6.1	MATERIAL HANDLING AND STORAGE
6.1.1	All the equipments/materials furnished under this contract shall be received from the project stores, sheds / storage yards and transported to pre assembly area / erection site and stored in the storage spaces in a manner so that they are easily retrievable till the contractor erects them. While drawing/lifting material from BHEL / customer stores, the contractor shall ensure that the balance / other materials are stacked back immediately. No claim is admissible on this account
6.1.2	While BHEL will endeavor to store / stack / identify materials properly in their open / close / semi closed / tarpaulins covered storage yard / shed, it shall be contractor's responsibility to assist BHEL in identifying materials well in time for erection. They should take the delivery of the same, following the procedure indicated by BHEL, and transport the material safely to pre-assembly yard / erection site in time, according to program.
6.1.3	The contractor shall take delivery of components, equipment / consumables from storage area after getting the approval of BHEL Engineer on standard indent forms.
6.1.4	The contractor shall identify and deploy necessary Engineers / supervisors / workmen for the above work in sufficient number as may be needed by BHEL, for areas covering their scope.
6.1.5	All the equipment shall be handled very carefully to prevent any damage or loss. No untested wire ropes / slings etc. shall be used for unloading / handling. The equipment shall be properly protected to prevent damage either to the equipment or to the floor where they are stored. The equipment from the stores shall be moved to the actual location at the appropriate time so as to avoid damage of such equipment at site.
6.1.6	Contractor shall ensure that while lifting slings shall be put over the points indicated on the equipment or as indicated in the manufacturer's drawings. Slings / shackles of proper size shall be used for all lifting and rigging purposes. All care shall be taken to safe guard the equipment against any damage. Dragging of piping / valves should be avoided. In case of any damage the cost shall be covered from the contractor.
6.1.7	Approach road conditions from the stores / yards to the erection site may not

	be equipped and ideal for smooth transportation of the equipment. Contractor may have to be adequately prepared to transport the materials under the above circumstances without any extra cost. . The contractor may familiar himself with soil conditions at site.
6.1.8	Contractor shall be responsible for examining all the plant and materials issued to him and notify the Engineer immediately of any damage, shortage, discrepancy etc before they are moved out of the stores / storage area. The contractor shall be solely responsible for any shortages or damages in transit, handling, storage and erection of the equipment once received by him. As the erection work will be spread in different areas / locations of the project, contractor has to arrange sufficient number of watch / ward personal to avoid any pilferage of material
6.1.9	The contractor shall maintain an accurate and exhaustive record-detailing out the list of all equipment received by him for the purpose of erection and keep such record open for the inspection of the engineer at any time.
6.1.10	All the material in the custody of contractor and stored in the open or dusty locations must be covered with suitable weather proof / fire retardant covering material wherever applicable and shall be blocked up on raised level above ground. All covering materials including blocks and sleeper shall be arranged by the contractor at his cost.
6.1.11	If the material belonging to the contractor are stored in area other than those earmarked for his operation the engineer will have the right to get it moved to the area earmarked for the contractor at the contractors risk and cost.
6.1.12	The contractor shall be responsible for making suitable indoor storage facilities to store all equipment (drawn by the contractor from BHEL / customer stores), which require indoor storage till the time of their installation. The Engineer will direct the contractor in this regard, which item in his opinion will require indoor storage, and the contractor shall comply with Engineer's decision.
6.1.13	The contractor shall ensure that all surplus / damaged / scrap / unused material, packing wood / containers/ special transporting frames etc are returned to BHEL at a place in project area identified by the Engineer. The contractor will maintain an account for all items received and returned to BHEL. Any shortage in returning such items shall be chargeable to the contractor except allowable wastage for packing wood only.
6.1.14	The contractor shall hand over all parts / materials remaining extra over the normal requirement with proper identification tags to the stores as directed by

	the concerned BHEL engineer.
6.1.15	The contractor shall ensure that all the packing materials and protective devices installed on equipment during transit and storage are removed before installation.
6.1.16	It shall be the responsibility of the contractor to keep the work / storage areas in neat, tidy and working conditions. All surplus/unusable packing and other materials shall be removed and deposited at location(s) specified by BHEL within the project premises. If required weighing of the same within the project premises will have to be carried out.
6.2	PRESERVATION OF COMPONENTS
6.2.1	After taking delivery from BHEL / customer's stores, plant materials storage shall be subjected to the following protection besides other provisions indicated in these specifications elsewhere.
6.2.1.1	Items stored outdoors shall be stacked up at least six inches (6") off the ground.Items should not be stored in a low lying area where water logging is a possibility. Contractor should have sufficient numbers of wooden / concrete / steel sleepers for the job.
6.2.1.2	Motors, valves, electrical equipment, control equipment and instruments, and special or precision items requiring special care,etc shall be stored indoors. Motor windings shall be kept dry by use of external heat or space heaters.
6.2.1.3	Bearings and other wearing surfaces of plant materials shall be protected against corrosion and kept clean and should be regularly monitored.
6.2.1.4	Insulation materials shall be stored indoors or otherwise protected against getting wet/ damaged, using suitable measures and should be protected from direct rain.
6.2.2	It shall be the responsibility of the contractor to apply preservatives / touch up paints (primer) on equipment handled and erected by him till such time of final painting. It shall be contractor's responsibility to arrange for required paints (primer), thinners, labour, scaffolding materials, cleaning materials like wire brush, emery sheets, etc, cleaning of surface and provide one coat of preservatives / paints (primer) from time to time as decided by BHEL engineer. The accepted rate shall include this work also. It is to be noted that such painting may have to be done as and when required till such time the final painting is carried out.
6.2.3	The contractor shall effectively protect the finished work from action of weather

	and from damage or defacement and shall cover the finished parts then and there for their protection.
6.2.4	Any failure on the part of contractor to carry out works according to above clauses will entail BHEL to carry out the job from any other party and recover the cost from contractor.

7.0	DRAWINGS AND DOCUMENTS
7.1	The detailed drawings, specifications available with BHEL engineers will be made available to the contractor during execution of work at site. The contractor will also ensure availability of all drawings / documents at work place.
7.2	Necessary drawings to carry out the erection work will be furnished to the contractor by BHEL on loan, which shall be returned to BHEL Engineer at site after completion of work. Contractor shall ensure safe storage and quick retrieval of these documents.
7.3	The contractor shall maintain a record of all drawings and documents available with him in a register as per format given by BHEL Engineer. Contractor shall ensure use of pertinent drawings / data / documents and removal of obsolete ones from work place and returning to BHEL.
7.4	The data furnished in various annexure enclosed with this tender specification are only approximate and for guidance. However, the change in the design and in the quantity may occur as is usual in any such large scale of work. The contractors quoted rates shall be inclusive of the above factor
7.5	Should any error or ambiguity be discovered in the specification or information the contractor shall forthwith bring the same to the notice of BHEL before commencement of work. BHEL's interpretation in such cases shall be final and binding on the contractor.
7.6	Deviation from design dimensions should not exceed permissible limit. The contractor shall not correct or alter any dimension / details, without specific approval of BHEL.

8.0	INSPECTION AND QUALITY
8.1	Inspection, Quality Assurance, Quality Control
8.1.1	Preparation of quality assurance log sheets and protocols with customer/ consultants/statutory authority, welding logs, NDE records, testing & calibration records and other quality control and quality assurance documentation as per BHEL engineer's instructions, is within the scope of work/specification. These records shall be submitted to BHEL/customer for approval from time to time.
8.1.2	The protocols between contractor and customer/ BHEL shall be made prior to installation for correctness of foundations, materials, procedures, at each stage of installation, generally as per the requirement of customer/ BHEL. This is necessary to ensure elimination of errors or keeping them within tolerable limits and to avoid accumulation and multiplication of errors.
8.1.3	A daily log book should be maintained by every supervisor/engineer of contractor on the job in duplicate (one for BHEL and one for contractor) for detailing and incorporating alignment/clearance / centering / leveling readings and inspection details of various equipments etc. High pressure welding details like serial number of weld joints, welders name, date of welding, details of repair, heat treatment etc. will be documented in welding log as per BHEL Engineer's instructions. Record of radiography containing details like serial number of weld joints, date of radiography, repairs, if any, re-shots etc shall also be maintained as per BHEL Engineer's instructions. Record of heat treatments performed shall be maintained as prescribed by BHEL
8.1.4	The performance of welders will be reviewed from time to time as per the BHEL standards. Welders' performance record shall be furnished periodically furnished for scrutiny of BHEL's Engineer. Corrective action as informed by BHEL shall be taken in respect of those welders not conforming to these standards. This may include removal/ discontinuance of concerned welder(s). Contractor shall arrange for the alternate welders immediately
8.1.5	All the welders shall carry identity cards as per the proforma prescribed by BHEL/Customer/Consultant. Only welders duly authorized by

	BHEL/customer/consultant shall be engaged on the work.
8.1.6	Contractor shall provide all the Measuring Monitoring Equipments (MMEs) required for completion of the work satisfactorily. These MMEs shall be of brand, quality and accuracy specified by BHEL Engineer and should have necessary calibration and other certificates as per the requirement of BHEL Engineer. Decision of BHEL Engineer regarding acceptance or otherwise of the measuring instruments/gauges/tools for the work under this specification, is final and binding on the contractor. BHEL may give an indicative list of MMEs required for this work and to be made available by the contractor. The list will be reviewed by BHEL and the contractor shall meet any augmentation needed wherever required.
8.1.7	It is the responsibility of the contractor to prove the accuracy of the testing/measuring/calibrating equipments brought by him based on the periodicity of calibration as called for in the BHEL's quality assurance standards/BHEL Engineer's instructions.
8.1.8	Any re-laying or re-termination of cables/re-erection of instruments/ recalibration of instruments etc. required due to contractor's mistake or design requirement and found at any stage inspection, shall be carried out by the contractor at no extra cost.
8.1.9	BHEL, Power Sector Regions (PSNR/PSER/PSWR/PSSR) have already been accredited with ISO 9001 certification and as such this work is subject to various audits to meet ISO 9001 requirements. One particular aspect which needs special mention is about arrangement of calibration of instruments by the contractor. Contractor shallensure deployment of reliable andcalibratedMMEs (Measuring and Monitoring Equipments). The MMEs shall have test / calibration certificates from authorised / Government approved / Accredited agencies traceable to National / International Standards. Re-testing / re-calibration shall also be arranged at regular intervals during the period of use as advised by BHEL Engineer within the contract price. The contractor will also have alternate arrangements for such MMEs so that work does not suffer when the particular equipment / instrument is sent for calibration. Also if any MMEs not found fit for use, BHEL shall have the right to stop the use of such item and instruct the contractor to deploy proper item and recall ie repeat the readings taken by that instrument, failing which BHEL may deploy MME and retake the readings at Contractor's cost.
8.1.10	Re-work necessitated on account of use of invalid MMEs shall be entirely to the

	contractor's account. He shall be responsible to take all corrective actions, including resource augmentation if any, as specified by BHEL to make-up for the loss of time.
8.1.11	In the courses of erection, it may become necessary to carry repeated checks of the work with instruments recently calibrated, re-calibrated. BHEL may counter/ finally check the measurements with their own MMEs. Contractor shall render all assistance in conduct of such counter/final measurements.
8.1.12	Total Quality is the watchword of the work and Contractor shall strive to achieve the Quality Standards, procedures laid down by BHEL. He shall follow all the instructions as per BHEL drawings and Quality Standards.
8.2	Stage Inspection By FES/QA Engineers
8.2.1	Apart from day-to-day inspection by BHEL Engineers stationed at Site and Customer's Engineers, stage inspection of equipments under erection and commissioning at various stages shall also be conducted by teams of Engineers from Field Engineering Services of BHEL's Manufacturing Units, Quality Assurance teams from Field Quality Assurance, Unit/Factory Quality Assurance and Commissioning Engineers from Technical Services etc. Contractor shall arrange all labour, tools and tackles etcalong with proper access for such stage inspections free of cost.
8.2.2	Any modifications suggested by BHEL FES and QA Engineers' team shall be carried out. Claims of contractor, if any, shall be dealt as per Section 13, and provided such modifications have not arisen for reasons attributable tothe contractor.
8.3	Statutory Inspection of Work
8.3.1	The work to be executed under these specifications has to be offered for inspection, at appropriate stages of work completion, to various statutory authorities for compliance with applicable regulations. The work related statutory inspections, though not limited to, are as under: 1) Inspectorate of Steam Boilers and Smoke Nuisance 2) Electrical Inspector 3) Factory Inspector, Labour Commissioner, PF Commissioner and other authoritiy connected to this project work

	The scope includes getting the approvals from the statutory authorities, which includes arranging for inspection visits of statutory authority periodically as per BHEL Engineer's instructions, arranging materials for ground inspection, taking rub outs for the pressure parts to be offered for inspection, submitting co-related inspection reports, documents, radiographs etc and following up the matter with them. Contractor shall also make all arrangements for offering the Products / Systems for inspection at location, as applicable, to the concerned authority.
8.3.2	Contractor should be qualified to execute pressure parts & piping work coming under the purview of IBR, for which he should register himself with CIB of state concerned. contractor also should be aware of the latest IBR regulations and Electricity Act, including the amendments thereof.
8.3.3	Contractor shall comply with 'Qualification Tests for welders engaged in welding of Boilers and Steam Pipes under Construction, Erection and Fabrication at Site in India and in repairing Boilers and steam pipes by welding' in line with Chapter XIII of Indian Boiler Regulations-1950, for testing his welders / men / workers, including all associated fees, procedures, required instruments and equipments and their calibration there of. It shall be contractor's responsibility to obtain approval of Statutory Authorities, wherever applicable, for the conducting of any work which comes under the purview of these authorities, at his cost.
8.3.4	The following fees shall be excluded from scope of Contractor: 1. Registration Fee as per Regulation 385 of Chapter IX of Indian Boiler Regulations-1950 2. Fees for inspection of Boiler at the site of Construction as per Regulation 395 A, sl no 4 of Chapter IX of Indian Boiler Regulations-1950 However all other fees like visit fees charged by the Boiler Inspector and other arrangements for his visit or visits till satisfactory completion of work, shall be included in scope of Contractor
8.4	The Quality Management System of BHEL, Power Sector Regions (PSNR/PSER/PSWR/PSSR) have already been certified and accredited under ISO 9002 standards in this regard. The basic philosophy of the Quality Management System is to define the organizational responsibility, work as per

	documented procedures, verify the output with respect to acceptance norms, identify the non-conforming product/ procedure and take corrective action for removal of non-conformance specifying the steps for avoiding recurrence of such non-conformities, & maintain the relevant quality records. The nonconformities are to be identified through the conduct of periodical audit of implementation of quality systems at various locations/stages of work. Suppliers/vendors of various products/services contributing in the work are also considered as part of the quality management system. .as such the contractor is expected not only to conform to the quality management system of BHEL but also it is desirable that they themselves are accredited under any quality management system standard.
8.5	Field Quality Assurance
8.5.1	Contractor shall carry out all activities conforming to the approved Field Quality Plan (FQP) as revised from time to time. Total quality shall be the watchword of the work and contractor shall strive to achieve the quality standards, procedures laid down by BHEL. He shall follow all the instructions as per BHEL drawings and quality standards. Contractor shall provide the services of quality assurance engineer as per the relevant clauses.

9.0	OCCUPATIONAL HEALTH, SAFETY & ENVIRONMENT MANAGEMENT/ QUALITY ASSURANCE PROGRAMME: BHEL, Power Sector Regions (PSNR/ER/WR/SR) are each certified for ISO 9001. Quality of work to customer's satisfaction and fulfillment of system requirements are the essence of ISO 9001 certification. BHEL, PS Regions have HSE certification (ISO 14001 & OHSAS 18001) and therefore Contractor also shall organise/ plan/ perform all their activities to meet with the applicable requirements of these standards.
9.1	HSE (Health, safety & Environment): Contractor will comply with HSE (Health, safety & Environment) requirements of BHEL. HSE requirements in brief, are given below :-
9.1.1	Contractor will nominate one of their qualified and experienced employees as Safety Officer, who will be responsible for all HSE related issues of contractors work area. Safety Officer will have authority to stop any activity, in case he observes that the activity is not being carried out in safe manner. He will conduct surprise inspection as well as periodic inspection/drill (at least once in a month) and submit such reports to BHEL. He will conduct periodic meetings with supervisors of different working groups and explain HSE issues and use of PPEs to them. Reports of such meetings will be submitted to BHEL. Contractor will develop suitable work procedures based upon HSE guidelines and OCPs and implement it. Such work procedures will consist of Area of work, T&P Details, Work Procedure, PPE requirements etc. Please refer Schedule VIII of BOCW Rules for number of safety officers, qualification, duties etc. Contractor should highlight the requirement of safety to staff and labour through daily tool box meeting before start of the days job. Contractor to also submit monthly safety reports as per the format/procedure of BHEL.
9.1.2	The contractor shall arrange induction and regular health check of their employees as per schedule VII of BOCW rules by aregistered medical practitioner. The contractor shall take special care of the employees affected with occupational diseases under rule 230 and schedule II of BOCW Rules. The employees not meeting the fitness requirement should not be engaged for such job
9.1.3	Following personnel protective equipments (PPEs), in adequate numbers, will

	be made available at site & their regular use by all concerned will be ensured :-
	- HELMET
	- SAFETY GOGGLES & WELDING FACE SHIELDS
	- SAFETY BELTS AND PROTECTIVE NET FOR WORKING AT HEIGHT
	- SAFETY SHOES
	- EAR PLUG
	- ANY OTHER SAFETY EQUIPMENT REQUIRED FOR SAFE COMPLETION OF THE WORK
	Contractor to also submit monthly reports on above as per the format/procedure of BHEL.
9.1.4	Providing appropriate First Aid facilities for prompt treatment of injuries and illness at work place. Arranging training to contractor workmen/ employees for giving first aid.
9.1.5	Arranging ambulance in case of any emergency situation .
9.1.6	Identification of nearest hospital and health check-up of workmen/employees
9.1.7	Providing filtered drinking water at work place in cool container.
9.1.8	Providing Canteen, Rest Room, Washing facilities to the contracted employees as per provisions of Contract Labour Regulation Act 1970 (Chapter V).
9.1.9	Providing appropriate fire fighting equipment at designated work place and nominate a fire officer/warden adequately trained for his job.
9.1.10	Identification of nearest fire station and display contact telephone nos. / person's name around work places for cases of emergencies .
9.1.11	Providing adequate no. of 24 V sources and ensure that no hand lamps are operating at voltage level above 24 Volts.
9.1.12	Fulfilling safety requirements at all power tapping points.
9.1.13	Red & White caution tape of proper width(1.5 to 2 inch) to be used for cordoning unsafe area such as open trench, excavation area etc.
9.1.14	Providing contractors company logo on cloths /uniform/ proper identity cards with photographs, for correct identification of people working at project site .
9.1.15	High/ Low pressure welders to be identified with separate colourclothings. No welders will be deployed without passing appropriate tests and holding valid welding certificates. Approved welding procedure should be displayed at work place.
9.1.16	Displaying safe handling procedures for all chemicals such as lube oil, acid, alkali, sealing compounds etc , at work place .

9.1.17	All scaffolding/ platforms should be made from materials of appropriate quality/grade so that these are safe for use. It should be certified/declared safe for use by an experienced contractor person, before any scaffolding/platform is used. Please refer IS:3696 part 1&2 and 4014 part 1 & 2
9.1.18	All T&Ps/ MMEs should be of reputed brand/appropriate quality & must have valid test/calibration certificates bearing endorsement from competent authority of BHEL.. Contractor to also submit monthly reports of T&Ps deployed and validity test certificates to BHEL safety Officer as per the format/procedure of BHEL.
9.1.19	Ensure that the regulatory requirement of excessive weight limit (to carry/lift/ move weights beyond prescribed limits) for male and female workers are complied with.
9.1.20	Safety slogan, Safety/ Caution boards , wherever required to be displayed in consultation with BHEL.
9.1.21	Take suitable measures for waste management and environment related laws/legislation as a part of normal construction activities. Compliance with the legal requirements on storage/ disposal of paint drums (including the empty ones), Lubricant containers, Chemical Containers, and transportation and storage of hazardous chemicals will be strictly maintained. Ensure proper cleanliness of work place, housekeeping and waste management (including proper waste disposal) on daily basis.
9.1.22	It is imperative on the part of the contractor to join and effectively contribute in joint measures such as tree plantation, environment protection, contributing towards social upliftment, conversion of packing woods to school furniture, keeping good relation with local populace etc.
9.1.23	The contractor shall carry out periodic air and water quality check and illumination level checking in his area of work place and take suitable control measure.
9.1.24	The Contractor is required to provide proper safety net systems (IS-11057) where ever the hazard of fall from height is present as per instruction of BHEL Engineer. The safety nets shall be fire resistant, duly tested and shall be of ISI Mark and the nets shall be located as per site requirements to arrest or to reduce the consequences of a possible fall of persons working at different heights.
9.1.25	All applicable OCPs (Operational control procedures) will be followed by contractor as per BHEL instructions. This will be done as part of normal scope of work. List of such OCPs is given below . In case any other OCP is found to

	be applicable during the execution of work at site, then contractor will follow this as well, within quoted rate. These OCPs (applicable ones) will be made available to contractor during work execution at site. However for reference purpose, these are kept with Safety Officer of BHEL at the Power Sector Regional HQ, or available in downloadable format in the website, which may be refereed by contractor, if they so desire.
	■ OCP for safe handling of chemicals
	■ OCP for Electrical safety
	■ OCP for energy conservation
	■ OCP for safe welding and gas cutting operation
	■ OCP for fire safety
	■ OCP for safety in use of hand tools
	■ OCP for first aid
	■ OCP for food safety at canteen
	■ OCP for safety in use of cranes
	■ OCP for storage and handing of gas cylinders
	■ OCP for manual arc welding
	■ OCP for safe use of helmets
	■ OCP for good house keeping
	■ OCP for working at height
	■ OCP for safe excavation
	■ OCP for safe filling of Hydrogen in cylinder
	■ OCP for illumination
	■ OCP for handling and erection of heavy metals
	■ OCP for safe acid cleaning
	■ OCP for safe alkali boil out
	■ OCP for safe oil flushing
	■ OCP for steam blowing
	■ OCP for safe working in confined area
	■ OCP for safe operation of passenger lift, material hoists & cages
	■ OCP for Vehicle maintenance
	■ OCP for safe radiography
	■ OCP for waste disposal
	■ OCP for working at night
	■ OCP for blasting
	■ OCP for DG Set
	■ OCP for handling & storage of mineral wool

	■ OCP for drilling, reaming and grinding(machining) etc.
	■ OCP for hydraulic test
	■ OCP for spray insulation
	■ OCP for trial run of rotary equipment
	■ OCP for stress relieving
	■ OCP for material preservation
	■ OCP for cable laying/tray work
	■ OCP for electrical maintenance
	■ OCP for transformer charging
	■ OCP for safe handling of battery system
	■ OCP for computer operation
	■ OCP for storage in open yard
	■ OCP for sanitary maintenance
	■ OCP for batching
	■ OCP for piling rig operation
	■ OCP for gas distribution test
	■ OCP for cleaning of hotwell / deaerator
	■ OCP for electro-resistance heating
	■ OCP for compressor operation
	■ OCP for O&M of control of AC plant & system
	■ OCP for air compressor
	■ OCP for passivation
	■ OCP for Safe EDTA Cleaning
	■ OCP for Safe Chemical cleaning of Pre boiler system
	■ OCP for Safe Boiler Light up
	■ OCP for Safe Rolling and Synchronisation
	■ OCP for Safe Loading of Unit
9.2	SAFETY AND CLEANLINESS : The contractor shall take all necessary safety precautions and arrange for appropriate appliances as per discretion of BHEL or its authorised officials (Site Construction Manager) to prevent loss of human lives, injuries, to personnel engaged and damage to property. Before commencing the work, the contractor shall submit a "Safety Plan" to the above authorised BHEL official and obtain approval on the same. The safety plan shall indicate in detail the measures that would be taken by the contractor to ensure safety of men, equipment, materials and environment during execution of the work. This will also include an organization structure, role and responsibilities of the concerned key

	personnel, the safety practices that will be followed, PPEs deployed, plan for handling critical activities and emergencies.
9.3	If the contractor fails to take appropriate safety precautions or to provide necessary safety devices and equipment or to carry out instructions issued by the authorised BHEL official, BHEL shall have the right to take corrective steps at the risk and cost of the contractor.
9.4	During the course of construction, alternation or repairs, scrap with protruding nail, sharp edge etc and all other debris shall be kept clean from working areas, passage, ways and stairs in and around site.
9.5	Combustible scrap and debris shall be removed at regular intervals during the course of execution. Safe means shall be provided to facilitate such removal. The combustible scrap should be stored in safe place away from the plant materials to avoid fire accidents. The area shall be chosen in consultation with the Engineer and to be cordoned off.
9.6	Rigging equipment for materials handling shall be inspected prior to use in each shift and as necessary during its use to ensure that it is safe. Defective rigging equipment will be removed from service.
9.7	Rigging equipment shall not be loaded in excess of its recommended safe working load. Rigging equipment, when not in use, shall be removed from the original work area so as not to present a hazard to employees.
9.8	Contractor shall notify the engineer, of his intention to bring on to site any equipment or any container, with liquid or gaseous fuel or other substance which may create a hazard. The Engineer shall have the right to prescribe the condition under which such equipment or container may be handled and used during the performance of the works and the contractor shall strictly adhere to such instructions. The Engineer shall have the right to inspect any construction tool and to forbid its use, if in his opinion it is unsafe. No claim due to such prohibition will be entertained.
9.9	Where it is necessary to provide and/or store petroleum products or petroleum mixture & explosives, the contractor shall be responsible for carrying out such provision / storage in accordance with the rules & regulations laid down in the relevant petroleum act, explosive act and petroleum and carbide of calcium manual, published by the chief inspector of explosives of India. All such storage shall have prior approval if necessary from the chief inspector of explosives or any other statutory authority. The contractor shall be responsible for obtaining

	the same.
9.10	Cylinders shall be moved by tilting and rolling them on their bottom edges. They shall not be intentionally dragged, struck or permitted to strike each other violently.
9.11	When cylinders are transported by powered vehicle they shall be secured in a vertical position.
9.12	All workmen of the contractor working on construction area shall wear safety shoes, hand gloves, safety helmets and safety belt as applicable. The contractor shall provide to its workforce and ensure the use of following personnel protective equipment as found necessary and as directed by BHEL.
9.12.1	Safety Helmets conforming to IS-2925 : 1984
9.12.2	Safety Belts conforming to IS-3521:1983
9.12.3	Safety Shoes conforming to IS-1989 : 1978
9.12.4	Eye and face protection devices conforming to IS – 1179:1967, IS 5983:1980, IS 8521 Part 1:1977, IS 8521 Part 2: 1994.
9.12.5	Hand and body protection devices conforming to IS 4770:1991 and IS- 6994 : Part 1: 1973, IS – 8619 : 1977
9.12.6	Ear protection IS-9167:1979
9.12.7	Respiratory Protective Devices as per IS-9473:2002, i4746:1999 and 14166:1994
9.13	The contractor shall insure his workmen against all accidents and the policy shall be presented to BHEL Engineer on demand. Other wise, BHEL will arrange the same and the expenditure towards this will be debited to the contractor. In case of a fatal or disabling injury accident to any person at construction site due to lapses by the contractor, the victim and/or his/her dependants shall be compensated by the contractor as per statutory requirements. However, if considered necessary BHEL shall have the right to impose appropriate financial penalty on contractor and recover the same from payments due to the contractor for suitably compensating the victim and/or his/her dependence before imposing any such penalty. Appropriate enquiry shall be held by BHEL giving opportunity to the contractor for presenting his case. Above safety conditions are not exhaustive but gives an idea for the contractor and contractor shall adhere to all safety precaution given by the

	Engineer at site.
9.14	The contractor shall arrange at his cost adequate lighting facilities e.g. flood lighting, hand lamps, area lighting etc. at various levels for safe and proper working operations during night hours at the work spot as well as at the pre-assembly area.
9.15	The contractor shall be responsible for provision of all the safety notices and safety equipment as enjoined on him by the application of relevant statutory regulation / provisions and/or as called upon by BHEL from time to time. He shall be held responsible for any violation of statutory regulations (local, state or central) and BHEL instruction that may endanger safety of men, equipment and material.
9.16	The contractor shall provide temporary fencing wherever required as a safety measure against accident and damage to properties. Suitable caution notices shall be displayed where access to any part is found to be unsafe and hazardous.
9.17	Contractor shall ensure safety of all the workmen, material and equipment either belonging to him or to others working at site. He shall observe safety rules and codes applied by BHEL without exception.
9.18	It will be the responsibility of the contractor to ensure safe lifting of the equipment, taking due precaution to avoid any accident and damage to other equipment and personnel. All requisite tests and inspection of handling equipment, tools & tackle shall be periodically done by the contractor by engaging only the COMPETENT PERSONS as per law. Defective equipment or uncertifiedshall be removed from service. Any equipment shall not be loaded in excess of its recommended safe working load.
9.19	The contractor shall provide necessary first aid facilities as per schedule III. In addition, ambulance facilities, OHC and CMO as per schedule IV, V, X and XI of BOCW Rules as applicable for all his employees, representatives and workmen at site and BHEL shall have no obligation in this regard. The first aid boxes should be placed at various elevations so as to make them available within the reach and at the quickest possible time. The contractor should conduct periodical first –aid classes to keep his supervisor and Engineers properly trained for attending to any emergency.
9.20	Training

9.20.1	The contractor shall arrange induction safety training for all employees before assigning work. In addition, awareness programme, mock drill at regular intervals and daily tool box meetings shall be arranged. Monthly report of the above to be given to BHEL safety Officer as per prescribed BHEL formats
9.20.2	All the contractor's supervisory personnel and sufficient number of workers shall be trained for fire protection systems. Enough number of such trained personnel must be available during the tenure of contract. Contractor should nominate his supervisor to coordinate and implement the safety measures.
9.21	Contractor shall provide enough fire protecting equipment of the types and numbers at his office, stores, temporary structure in labour colony etc. Such fire protection equipment shall be easy and kept open at all times. The fire extinguishers shall be properly refilled and kept ready which should be certified at periodic intervals. The date of changing should be marked on the Cylinders. All other fire safety measures as laid down in the "codes for fire safety at construction site" issued by safety coordinator of BHEL shall be followed. Non-compliance of the above requirement under fire protection shall in no way relieve the contractor of any of his responsibility and liabilities to fire accident occurring either to his materials or equipment or those of others. Emergency contacts nos must be displayed at prominent locations
9.22	The contractor shall at his cost, remove from vicinity of work at least once each day all combustible waste, scrap, panting materials, rubbish, unused or other materials and deposit them in places specified by BHEL to keep the work site clear and tidy. Use of undercoated canvas paper, corrugated paper, fabricated carton, plastic or other flammable materials shall be restricted to the minimum and promptly removed.
9.23	The contractor shall not use any hand lamp energized by Electric power with supply voltage of more than 24 volts in confined spaces like inside water boxes, turbine casings, condensers etc.
9.24	All portable electric tools used by the contractor shall have safe plugging system to source of power and be appropriately earthed. Only electricians licensed by appropriate statutory authority shall be employed by the contractor to carry out all types of electrical works. Details of earth resource ad their test date to be given to BHEL safety officer as per the prescribed formats of BHEL
9.25	In case of any delay in completion of a job due to mishaps attributable to lapses by the contractor, BHEL shall have the right to recover cost of such delay from

	the payments due to the contractor, after notifying the contractor suitably.
9.26	Valve protection caps shall be kept in place and secured.
9.27	The contractor shall be responsible for the safe storage and handling of his radio-active sources as per BARC rules and regulations.
9.28	Tarpaulin being inflammable should not be used (instead, only non infusible covering materials shall be used) as protective cover while preheating, welding, stress relieving etc. at site.
9.29	If the contractor fails to improve the standards of safety in its operation to the satisfaction of BHEL after being given reasonable opportunity to do so and/or if the contractor fails to take appropriate safety precautions or to provide necessary safety devices and equipment or to carry out instruction regarding safety issued by BHEL, BHEL shall have the right to take corrective steps at the risk and cost of the contractor after giving a notice of not less than 7 days indicating the steps that would be taken by BHEL.
9.30	If the contractor succeeds in carrying out its job in time with out any fatal or disabling injury accident and without any damage to property BHEL may, at its sole discretion, favorably consider to reward the contractor suitably for the performance.
9.31	The contractor shall carefully follow the safety requirement of BHEL/ the purchaser with the regard to voltages used in critical areas.
9.32	The contractor shall use only properly insulated and armored cables which conform to the requirement of Indian Electricity Act and Rules for all wiring, electrical applications at site. BHEL reserves the right to replace any unsafe electrical installations, wiring, cabling etc. at the cost of the contractor. All electrical appliances used in the work shall be in good working condition and shall be properly earthed. No maintenance work shall be carried out on live equipment. The contractor shall maintain adequate number of qualified electricians to maintain his temporary electrical installations. Area wise Electrical safety inspection is to be carried out on monthly basis as per “Electrical Safety Inspection checklist’ and the report is to be submitted to BHEL safety officer
9.33	The contractor shall arrange adequate number of persons specifically for clearing any debris and for house keeping of the erection area including restacking of components in the erection areas. Housekeeping to be carried out

	as per BHEL's checklistand report is to be submitted to BHEL safety officer
9.34	In case of any damage to property due to lapses by the contractor, BHEL shall have the right to recover the cost of such damages from the contractor after holding an appropriate enquiry.
9.35	The contractor shall submit report of all accidents, fires and property damage etc to the Engineer immediately after such occurrence, but in any case not later then 24 hours of the occurrence. Such reports shall be furnished in the manner prescribed by BHEL. In addition periodic reports on safety shall also be submitted by the contractor to BHEL from time to time as prescribed by the Engineer.Compiled monthly reports of all kinds of accidents, fires and property damage to be submitted to BHEL safety officer as per prescribed formats
9.36	Before commencing the work, the contractor shall appoint/nominate a responsible person to supervise implementation of all safety measures and liaison with his counterpart of BHEL.
9.37	Suitable scaffolds shall be provided for workman for all works that cannot safely be done from the ground, or from solid construction except in the case of short duration of work which can be done safely from ladders. When a ladder is used, it shall be of rigid construction made of steel. The steps shall have a minimum width of 45 cm and a maximum rise of 30 cm. Suitable handholds of good quality wood or steel shall be provided and the ladder shall be given an inclination not steeper then ¼ horizontal and 1 vertical.
9.38	Scaffolding or staging more than 3.6 m above the ground floor, swung or suspended from an overhead support or erected with stationery support shall have a guard rail properly bolted, braced or otherwise secured, at least 90 cm above the floor or platform of such scaffolding or staging and extending along the entire length of the out side and ends thereof with only such openings as may be necessary for the delivery of materials. Such scaffolding or staging shall be so fastened as to prevent it form saver, from swaying, from the building or structure.
9.39	Working platforms, gangways and stairways shall be so constructed that they do not sag unduly or unequally and if the height of the platform gangways provided is more than 3.6 m above ground level or floor level, they shall be closely boarded and shall have adequate width which shall not be less than 750 mm and be suitably fenced as described above.

9.40	Every opening in the floor or a building or in a working platform shall be provided with suitable means to prevent the fall of persons or materials by providing suitable fencing or railing whose minimum height shall be 90 cm.
9.41	Wherever there are open excavation in ground, they shall be fenced off by suitable railing and danger signals installed at night so as to prevent persons slipping into the excavations.
9.42	Safe means of access shall be provided to all working places. Every ladder shall be securely fixed. No portable single ladder shall be over 9 m in the length while the width between side rails in rung ladder shall in no case be less than app. 29.2 cm for ladder upto and including 3 m in length. For longer ladders this width shall be increased at least ¼'' for each additional foot of length.
9.43	A sketch of the ladders and scaffolds proposed to be used shall be prepared and approval of the Engineer obtained prior to Construction.
9.44	All personnel of the Contactor working within the plant site shall be provided with safety helmets. All welders shall wear welding goggles while doing welding work and all metal worker shall be provided with safety gloves. Persons employed on metal cutting and grinding shall wear safety glasses.
9.45	Adequate precautions shall be taken to prevent danger for electrical equipment. No materials on any of the sites of work shall be so stacked or placed as to cause danger or inconvenience to any person or the public.
9.46	All trenches, four feet or more in depth, shall at all times be supplied with at least one ladder for each 30 m in length or fraction thereof. The ladder shall be extended from bottom of the trench to at least 90 cm above the surface of the ground. Sides of the trenches which are 1.50 m or more in depth shall be stepped back to give suitable slope or securely held by timer bracing, so as to avoid the danger of sides collapsing. The excavated materials shall not be placed within 1.5 m of the edges of the trench or half of the depth of the trench whichever is more. Cutting shall be done from top to bottom. Under no circumstances undermining or undercutting shall be done.
9.47.1	The contractor shall take permission of BHEL prior to risky jobs such as working at height, hot work, liftig activities, etc through permits. No job should be started without permits.
9.47.2	The Contactor shall take all measures at the sites of the work to protect all persons from accidents and shall be bound to bear the expenses of defense of

	every suit, action or other proceeding at law that may be brought by any persons for injury sustained or death owing to neglect of the above precautions and to pay any such persons such compensation or which may with the consent of the Contractor be paid to compromise any claim by any such person should such claim proceeding be filed against BHEL, the Contractor hereby agrees to indemnify BHEL against the same.
9.48	Before any demolition work is commenced and also during the process of the work the following shall be ensured:
9.48.1	All roads and open areas adjacent to the work site shall either be closed or suitably protected.
9.48.2	No electric cable or apparatus which is liable to be a source of danger nor a cable or an apparatus used by the operator shall remain electrically charged.
9.48.3	All practical steps shall be taken to prevent danger to persons employed from the risks of fire or explosion or flooding. No floor, roof or other part of the building shall be so overloaded with debris or materials as to render them unsafe.
9.49	All necessary personnel safety equipment as considered adequate by the Engineer should be kept available for the use of the persons employed in the Site and maintained in a condition suitable for immediate use and the Contactor should take adequate steps to ensure proper use of equipment by those concerned.
9.49.1	Workers employed on mixing asphalted materials, cement and lime mortars shall be provided with protective foot wear and protective goggles.
9.49.2	Those engaged in white washing and mixing or stacking of cement bags or any materials which is injurious to the eyes shall be provided with protective goggles.
9.49.3	Those engaged in welding works shall be provided with welder's protective eyesight lids.
9.49.4	Stone breakers shall be provided with protective goggles and protective clothing and seated sufficient to safe intervals.
9.49.5	Where workers are employed in sewers and manholes, which are in use, the Contractor shall ensure that the manhole covers are opened and ventilated at least for an hour before the workers are allowed to get into manhole, and the manholes so opened shall be cordoned off with suitable railing and provided

	with warning signals or boards to prevent accident to the public.
9.49.6	The Contractor shall not employ men below the age of 18 years and women on the work of painting with products containing lead in any form. Wherever men above the age of 18 are employed on the work of lead painting, the following precautions should be taken.
9.49.6.1	No paint containing lead or lead products shall be used except in the form of paste or ready made paint.
9.49.6.2	Suitably face masks should be supplied for use by the workers where paints are applied in the form of spray or a surface having lead paint dry rubbed and scrapped.
9.49.6.3	Overalls shall be supplied by the Contractor to the workmen and adequate facilities shall be provided to enable the working painters to wash during the cessation of work.
9.50	When the work is being done near any place where there is risk of drowning all necessary equipment should be provided and kept ready for use and all necessary steps taken for prompt rescue of any person in danger and adequate provision should be made for prompt first aid treatment of all injuries likely to be sustained during the course of the work.
9.51	Motors, gearing, transmission, electric wiring and other dangerous parts of hoisting appliances should be provided with efficient safe guards. Hoisting appliance should be provided with such means as will reduce to the minimum the risk of any part of a suspended load becoming accidentally displaced. When workers employed on electrical installations which are already energized, insulting mats, wearing apparel, such as gloves, sleeves and boots as may be necessary should be provided. The worker should not wear any rings, watches and carry keys or other materials which are good conductor of electricity.
9.52	All scaffolds, ladders and other safety devices mentioned or described herein shall be maintained in safe condition and no scaffold, ladder or equipment shall be altered or removed while it is in use. Adequate washing facilities should be provided at or near the places of work.
9.53	The contractor shall maintain and ensure necessary safety measures as required for inspection and tests HV test, Pneumatic test, Hydraulic test, Spring test, Bend test etc as applicable, to enable inspection Agency for performing Inspection. If any test equipment is found not complying with proper safety

	requirements then the Inspection Agency may withhold inspection, till such time the desired safety requirements are met.
9.54	The Contractor shall notify BHEL of his intention to bring to site any equipment or material which may create hazard. BHEL shall have the right to prescribe the conditions under which such equipment or materials may be handled and the contractor shall adhere to such instructions. BHEL may prohibit the use of any construction machinery, which according to him is unsafe. No claim for compensation due to such prohibition will be entertained by BHEL.
9.55	All safety precautions shall be taken for welding and cutting operations as per IS-818. All safety precautions shall be taken for foundation and other excavation marks as per IS-3764.
9.56	.All gas cylinders shall be stored in upright position. Suitable trolley shall be used. There shall be flash-back arrestors conforming to IS-11006 at both cylinder and burner ends. Damaged tube and regulators must be immediately replaced. No of cylinders shall not exceed the specified quantity as per OCP
9.57	These safety provisions should be brought to the notice of all concerned by display on a notice board at a prominent, place at work spot. The persons responsible for compliance of the safety code shall be named therein by the Contractor
9.58	To ensure effective enforcement of the rules and regulations relating to safety precautions the arrangement made by the contract shall be open to inspection by the Engineer of the Engineer's Representative.
9.59	Keeping the work area clean/ free from debris, removed scaffoldings, scraps, insulation/sheeting wastage /cut pieces, temporary structures, packing woods etc. will be in the scope of the contractor. Such cleanings has to be done by contractor within quoted rate, on daily basis by an identified group. If such activity is not carried out by contractor / BHEL is not satisfied, then BHEL may get it done by other agency and actual cost alongwith BHEL overheads will be deducted from contractor's bill. Such decisions of BHEL shall be binding on the contractor.
9.60	Notwithstanding the above clauses there is nothing to exit the Contractor from the operations of any other Act or Rule in force in area of work in this respect. Provided always that all safety measures apart from those specifically provided in this agreement which are brought to the notice of the Contractor from time to time by the Engineer shall be complied by the Contractor. Provided further that

all consequences, damages, or losses arising by reason of any safety code shall be met with by the Contractor.

9.61 NON COMPLIANCE:-

NONCONFORMITY OF SAFETY RULES AND SAFETY APPLIANCES WILL BE VIEWED SERIOUSLY AND BHEL HAS RIGHT TO IMPOSE FINES ON THE CONTRACTOR AS UNDER for every instance of violation noticed:

SN	Violation of Safety Norms	Fine (in Rs)
01	Not Wearing Safety Helmet	50/- *
02.	Not wearing Safety Belt or not anchoring life line	100/-*
03	Not wearing safety shoe	100/-*
04	Not keeping gas cylinders vertically	100/-
05	Not using flash back arrestors	50/-
06	Not wearing gloves	50/- *
07.	Grinding Without Goggles	50/- *
08.	Not using 24 V Supply For Internal Work	500/-
09.	Electrical Plugs Not used for hand Machine	100/-
10.	Not Slinging property	200/-
11.	Using Damaged Sling	200/-
12.	Lifting Cylinders Without Cage	500/-
13.	Not Using Proper Welding Cable With Lot of Joints And Not Insulated Property.	200/-
14.	Not Removing Small Scrap From Platforms	200/-
15.	Gas Cutting Without Taking Proper Precaution or Not Using Sheet Below Gas Cutting	200/-
16.	Not Maintaining Electric Winches Which are Operated Dangerously	500/-
17.	Improper Earthing Of Electrical T&P	500/-
18	No or improper barricading	500/-
19.	Activity carried out without Safety work permit (Height work, Lifting activity, Hot work-each person/case)	1000/-
20.	Accident Resulting in Partial Loss in Earning Capacity	25,000/- per victim

	21.	Fatal Accident/Accidents Resulting in total loss in Earning Capacity	1,00,000/- per victim #

Legend:-*: per head,
#: or as deducted by Customer whichever is higher

Any other non-conformity noticed not listed above will also be fined as deemed fit by BHEL. The decision of BHEL engineer is final on the above. The amount will be deducted from running bills of the contractor. The amount collected above will be utilized for giving award to the employees who could avoid accident by following safety rules. Also the amount will be spent for purchasing the safety appliances and supporting the safety activity at site.

9.61 CITATION:-If safety record of the contractor in execution of the awarded job is to the satisfaction of safety department of BHEL, issue of an appropriate certificate to recognize the safety performance of the contractor may be considered by BHEL after completion of the job

9.62 MEMORANDUM OF UNDERSTANDING

After Award Of Work, Contractors Are Required To Enter Into A Memorandum Of Understanding As Given Below:

Memorandum of Understanding

- BHEL, Power Sector _____ Region is committed to Health, Safety and Environment Policy (EHS Policy).
- M/s _____ do hereby also commit to the same EHS Policy while executing the Contract Number _____
- M/s _____ shall ensure that safe work practices not limited to the above are followed by all construction workers and supervisors. Spirit and content therein shall be reached to all workers and supervisors for compliance.
- BHEL will be carrying out EHS audits twice a year and M/s _____ shall ensure to close any non-conformity observed/reported within fifteen days.

Signed by authorized representative of M/s ----------

	Name : Place & Date:

10.0	RA Bill Payments
10.1	The contractor shall submit his monthly RA bills with all the details required by BHEL on specified date every month covering progress of work in all respects and areas for the previous calendar month.
10.2	Mode of payment and measurement of work completed shall be as per relevant clauses of General Conditions of Contract
10.3	Release of payment in each running bill including PVC Bills where ever applicable will be restricted to 95% of the value of work admitted as per stages of progressive pro rata payments.
10.4	The 5% thus remaining shall be treated as 'Retention Amount' and shall be released as per terms specified in the General Conditions of Contract.
10.5	The payment for running bills will normally be released within 30 days of submission of running bill complete in all respects with all documents. It is the responsibility of the contractor to make his own arrangements for making timely payments towards labour wages, statutory payments, outstanding dues etc and other dues in the meanwhile. In case of Civil works, 60% of RA Bills complete and correct in all respects and certified by BHEL Engineer, shall be paid within 15 days of receipt. Balance payment shall be within 30 days.
10.6	BHEL shall release payment through Electronic Fund Transfer (EFT)/RTGS. In order to implement this system, Contractor to furnish details pertaining to his Bank Accounts where proceeds will be transferred through BHEL's banker, as per prescribed formats: Note: BHEL may also choose to release payment by other alternative modes as applicable
10.7	Paying Authority shall be the Construction Manager of the Site. Any change in the paying Authority shall be intimated to the Contactor accordingly.

11.0	Performance Monitoring
11.1	Performance of the contractor is monitored through various reports/reviews and shall be jointly evaluated every month for unit wise identified packages as per prescribed formats. Based on the net weighted scores obtained, Contractors shall be rated 'Good' or 'Satisfactory' or 'Unsatisfactory'
11.2	In case of any dispute on performance rating and the contractor refuses to sign on the performance rating given by BHEL package Incharge, the same shall be reviewed by BHEL site Incharge/Construction Manager and his decision shall be final.
11.3	Release of RA Bills will be contingent upon joint evaluation of performance
11.4	Performance of the contractor will be taken into consideration for assessing the capacity of the bidder to execute future jobs under tender, as detailed in the Notice Inviting Tender. Risk of non evaluation or non availability of the Monthly performance evaluation reports is to be borne by the Bidder.
11.5	In case of 'Unsatisfactory performance' for a continuous period of three or more months for a package or packages, BHEL has the right to get the balance works executed at the risk and cost of the contractor.
11.6	In case of 'Unsatisfactory performance' in a financial year, BHEL reserves the right to put on hold such Contractors for a period of six months for similar package or similar packages

12.0	Suspension of Business dealings
12.1	BHEL reserves the right to take action against contractors who fail to perform or indulge in malpractices, by suspending business dealings with them.
12.2	Suspension could be in the form of 'Hold', 'De-listing' or 'Banning' a contractor.
12.3	A bidder may be put on HOLD for a period of 6 months, for future tenders for specific works on the basis of one or more of the following reasons: a) Bidder does not honour his own offer or any of its conditions within the validity period. b) Bidder fails to respond against three consecutive enquires of BHEL. c) After placement of order, Bidder fails to execute a contract. d) Bidder fails to settle sundry debt account, for which he is legitimately liable, within one year of its occurrence. e) Bidder's performance rating falls below 60% in specific category (more fully described in chapter 'Performance Monitoring') f) Bidder works are under strike/ lockout for a long period.
12.4	A Bidder may be de-listed from the list of registered Bidders of the region for a period of 1 year on the basis of one or more of the following reasons:- a) Bidder tampers with tendering procedure affecting ordering process or commits any misconduct which is contrary to business ethics. b) Bidder has substituted, damaged, failed to return, short returned or unauthorizedly disposedoff materials/ documents/ drawings/ tools etc of BHEL. c) Bidder no longer has the technical staff, equipment, financial resources etc. required to execute the orders/ contracts.
12.5	A Bidder can be banned from doing any business with all Units of BHEL for a period of 3 years on the basis of one or more of the following reasons: a) Bidder is found to be responsible for submitting fake/ false/ forged documents, certificates, or information prejudicial to BHEL's interest. b) In spite of warnings, the Bidder persistently violates or circumvents the provisions of labour laws/ regulations/ rules and other statutory requirements. c) Bidder is found to be involved in cartel formation

	d) The Bidder has indulged in malpractices or misconduct such as bribery, corruption and fraud, pilferage etc which are contrary to business ethics. e) The Bidder is found guilty by any court of law for criminal activity/ offences involving moral turpitude in relation to business dealings. f) The Bidder is declared bankrupt, insolvent, has wound up or been dissolved; i.e ceases to exist for all practical purposes. g) Bidder is found to have obtained Official Company information/ documentation by questionable means. h) Communication is received from the administrative Ministry of BHEL to ban the Bidder from business dealings.
12.6	Contracts already entered with a contractor before the date of issue of order of 'HOLD' or 'DE-LISTING' shall not be affected.
12.7	All existing contracts with a 'BANNED' contractor shall normally be short closed
12.8	Once the order for suspension is passed, existing offers/new offers of the contractor shall not be entertained
12.9	The above guidelines are not exhaustive but enunciate broad principles governing action against contractors

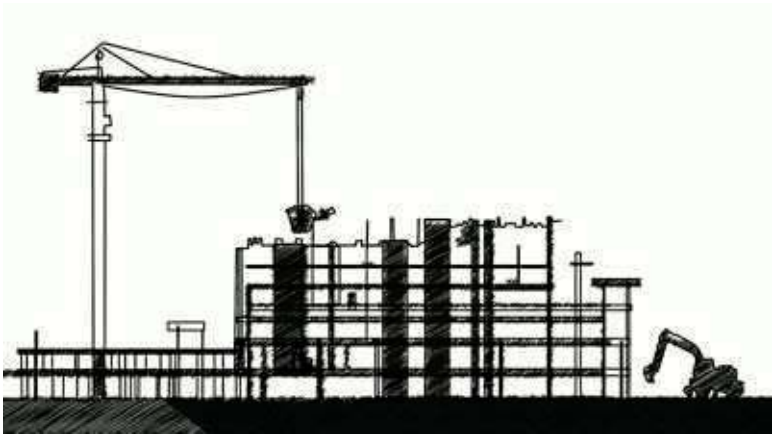

HEALTH, SAFETY and ENVIRONMENT PLAN

For

SITE OPERATIONS

By

SUB-CONTRACTORS

POWER SECTOR- EASTERN REGION

DOCUMENT ISSUE SHEET

	PREPARED BY	APPRO□ED BY
NAME	Saswajeet Rout	
DESIGNATION		
SIGNATURE		Pradip Ghosh Digitally signed by Pradip Ghosh DN: cn=Pradip Ghosh, o=BHEL, ou=HSE-PSER, email=pradipg@bhelpser.co.in, c=IN Date: 2019.06.15 13:02:14 +05'30'
ISSUED BY:		
ISSUED TO:		
COPY NO:		
DATE OF ISSUE:		

THIS PLAN SUPERSEDES THE STANDARD HSE PLAN

HSE PLAN FOR SITE OPRATIONS BY BHEL'S SUBCONTRACTORS AT A GLANCE

BEFORE START

SIGNING OF MOU	
Agree to comply to HSE requirement- Statutory and BHEL's	Agree to accept BHEL's decision on release of 1.5% (as specified in the contract) of Gross bill Amount or part thereof or otherwise (non-release), based on our HSE performance as evaluated by BHEL during the execution period

PLAN

HSE ORGANISATION	
Manpower • **1 (one) safety officer for every 300 workers or part thereof** • **1(one) safety-supervisor for every 150 workers** • **1(one) safety-steward/ supervisor for every 50 workers** As per Cl. 7.1	**HSE Roles and responsibilities** • All employees as per 7.2.1 • Site In-charge & Package In-charges- As per clause 7.2.2 • Safety officer- As per clause 7.2.3

HSE Planning
for Man, Machinery / Equipment/ Tools & Tackles

PROVIDE

HSE INFRASTUCTURE	
• PPEs • Drinking Water • Washing Facilities • Latrines and Urinals • Provision of shelter for rest • Medical facilities	• Canteen facilities • Labor Colony • Emergency Vehicle • Pest Control • Scrapyard • Illumination • Crèches (if required)

TRAIN

HSE TRAINING , AWARENESS & PROMOTION	
Training • Induction training • Height work and other critical areas • Tool Box talk & Pep Talk • Job Specific Training	**Awareness & Promotion** • Posters & Signage • Emergency Contact/Information Display • Banner • Competition & Awards

COMMUNICATE

HSE COMMUNICATION	
Incident Reporting • Accident- Fatal, Major & Minor • Property damage • Near Miss **Safety Performance Reporting**	**Event Reporting** • Celebrations • Training • Medical camp • Motivational Activities

EXECUTE SAFELY

SAFETY DURING WORK E□ECUTION

PERMIT TO WORK

Height work (above 2 meters), Hot Work, Heavy Lifting, Confined Space, Radiography, Excavation (More than 1.22 meters), Lockout / Tag out

OPERATIONAL CONTROL

- Welding, Gas Cutting Grinding
- Rigging, Signaling
- Cylinder- Storage & Movement
- Demolition work
- T&Ps
- Chemical Handling
- Electrical works
- Painting
- Fire
- Scaffolding
- Height work
- Working Platform
- Excavation / Civil Work
- Ladder
- Lifting
- Hoisting appliance
- Hard Barricading

HOUSE KEEPING

WASTE MANGEMENT

TRAFFIC MANAGEMENT

ENVIRONMENTAL CONTROL

EMERGENCY PREPAREDNESS AND RESPONSE PLANNING

CHECKS

HSE AUDITS & INSPECTION

- Daily Checks
- Inspection of Height work
- Inspection of PPEs
- Inspection of T & Ps
- Inspection of Cranes & Winches
- Inspection of Welding and Gas cutting
- Inspection of elevators etc.

HSE PERFORMANCE EVALUATION PARAMETERS

NON CONFORMANCE

PENALTY for NON CONFORMANCE
Refer Clause 16 Incremental penalty

For repeated violation by the same person, the penalty would be double of the previous penalty

For repeated fatal incident in the same contract / package, incremental penalty to be imposed. The subcontractor will pay 2 times the penalty compared to the previously paid in case there are repeated cases of fatal incidents under the same subcontractor for the same package in the same unit.

COMPENSATION TO ACCIDENT VICTIMS
Refer Clause 17
Employee Compensation Act, 1922
Other Acts and Guidelines relevant to employee compensation

ORGANI□ATION OF THIS DOCUMENT

- ***GENERAL SECTION***
- ***SECTION A:***

  MAIN REQUIREMENTS APPLICABLE IN FULL

- ***SECTION B:***

  SPECIAL REQUIREMENTS

- ***ANNEXES***

CONTENTS

S. N□.	D□□□r□□□□	P□□□N□.
	GENERAL	
1	PURPOSE	9
2	SCOPE	9
3	OBJECTIVES AND TARGETS	10
4	REFERENCES	11
5	HEALTH, SAFETY & ENVIRONMENT POLICY	12
	MEMORANDUM OF UNDERSTANDING	1□
6	TERMS & DEFINITIONS	14
	SECTION-A	
7	HSE ORGANIZATION	17
7.1	DEPLOYMENT (NUMBERS, QUALIFICATIONS & EXPERIENCE)	17
7.2	HSE RESPONSIBILITIES	19
8	PLANNING BY SUBCONTRACTOR	23
8.1	MOBILISATIONOF MACHINERY/EQUIPMENT/TOOLS	23
8.2	MOBILISATION OF MANPOWER BY SUBCONTRACTOR	24
8.3	PROVISION OF PPEs	25
8.4	ARRANGEMENT OF INFRASTRUCTURE	26
9	HSE TRAINING & AWARENESS	32
10	HSE PROMOTION – SIGNAGE,POSTERS, COMPETITIONS, AWARDS ETC	34
11	HSE COMMUNICATION & PARTICIPATION	35
12	INCIDENT INVESTIGATION & CORRECTIVE ACTION	36
13	SAFETY DURING WORK EXECUTION	37
13.1	HSE SYSTEMS & PROCEDURES	37
13.2	WORK PERMIT SYSTEM	39
13.3	ACTIVITY SPECIFIC SAFETY REQUIREMENTS	40
13.4	ENVIRONMENTAL CONTROL	46
13.5	HOUSEKEEPING	47

S. N□.	D□□□r□□□□□	P□□□ N□.
13.6	WASTE MANAGEMENT	47
13.7	TRAFFIC MANAGEMENT	48
13.8	EMERGENCY PREPAREDNESS & RESPONSE	50
13.9	CONTROL OF DOCUMENTS	50
13.10	CONTROL OF RECORDS	50
14	HSE INSPECTION	51
15	HSE PERFORMANCE	54
16	HSE PENALTIES FOR NON-COMPLIANCE	55
17	OTHER REQUIREMENTS	56
18	INTERNAL & EXTERNAL HSE AUDITS	56
19	HSE REVIEW	57
20	FORMATS USE	58
	FORMATS	
	SECTION B	
	ESTABLISHMENT OF COMMON FACILITIES / INFRASTRUCTURE	
	SHARED FACILITIES	
	ANNEXES	
	ANNE□URE-1	
	ANNE□URE-2	
	ANNE□URE-□	
	ANNE□URE-A: ACTIVITY SPECIFIC REQUIREMENTS FOR SAFETY	
	ANNE□URE-B: HSE PRECAUTIONS FOR ADVERSE CLIMATES & WEATHER CONDITIONS	
	ANNE□URE-C: FIRE EXTINGUISHER REQUIREMENTS	
	ANNE□URE-D: SPECIFICATIONS	
	RECORD OF RE□ISIONS	

GENERAL

1. PURPOSE

1.0 The purpose of this HSE Plan is to provide for the systematic identification, evaluation, prevention and control of general workplace hazards, specific job hazards, potential hazards and environmental impacts that may arise from foreseeable conditions during installation and servicing of industrial projects and power plants.

1.1 This document shall be followed by BHEL's Sub-Contractors at all installation and servicing sites. In case BHEL has contractual HSE obligations towards customer, this document will be followed in conjunction with (BHEL's) customer specific requirements, ensuring that applicable systems, controls and checks of both are implemented in letter and spirit.

1.2 In case the customer has any specific requirement, the same is to be fulfilled but may not include financial inclusion.

1. This document shall be followed unless otherwise mentioned in TCC (technical condition of contract) or elsewhere in NIT or contract documents. This supersedes all HSE clauses in GCC.

1.4 Although every effort has been made to make the procedures and guidelines in line with statutory requirements, in case of any discrepancy relevant statutory guidelines must be followed.

2. SCOPE

The document is applicable on all activities and assets including managerial, supervisory, professional, technical, clerical and other workers including contract laborers; and equipment operating under the control of BHEL's Subcontractors at all installation / servicing activities of BHEL Power Sector as per the relevant contractual obligations.

3. OBJECTIVES

The HSE Plan reflects that BHEL places high priority upon the Occupational Health, Safety and Environment at workplaces. The Sub-contractor shall:

Health & Safety

- Prevent injury and ill health of all persons at site ('Persons' refers to all personnel including managerial, supervisory, professional, technical, clerical and other workers including contract laborers)

Environment

- Prevent pollution to environment and ensure protection of environment taking into account interested party concern and conservation of resources and reduction of wastage

Legal Requirements

- Comply at all times with the relevant statutory and contractual HSE requirements.

Planning & Resources

- Ensure that all work planning takes into account all persons that may be affected by the work.
- Ensure timely provision of resources to facilitate effective implementation of HSE requirements.

Competency, Training & Awareness

- Provide trained, experienced and competent personnel. Ensure medically fit personnel only are engaged at work.
- Provide all personnel with adequate information, instruction, training and supervision on the safety aspect of their work.

Maintenance of Equipment

- Ensure fitness testing of all T&Ps. Lifting appliances like cranes, chain pulley blocks etc. are certified by competent authority.

Safety during Operations

- Provide and maintain plant, places and systems of work that are safe and without risk to health and the environment.
- Effectively control, co-ordinate and monitor the activities of all personnel on the Project sites including subcontractors in respects of HSE.
- Establish effective communication on HSE matters with all relevant parties involved in the Project works.

HSE Improvement

- Capture the data of all incidents including near misses, process deviation etc. Investigate and analyze the same to find out the root cause
- Ensure timely implementation of correction, corrective action.
- Ensure continual improvement in HSE performance

GOALS AND TARGETS

- **To achieve "Zero Incident at Site" (LTI)**
- **100□ □□□□ □□□□□□□ □□□□□□□□□□□□□□□□□□□r□r□□□□r□□ □□□□r□□□□d □□ HSE.**
- **100□ H□□□□□□ S□□□□□ □□d E□□r□□□ □□□□□l□d□□□□□ r□□□□□□ □□□□d□□□□ □□r □□□□ □r□□r□.**
- **100□ H□□□ R□□□ □□□□□□□□□□ □□ □□ □□rr□d □□□□□□□ □□□□r □□□r□□□d M□□□□d S□□□□□ □□□□HIRA □A□□□□□-I□ □□□□□□SA □OCP □□d P□r□ □□□□ W□r□ □r□ □□ □□□□ □□□□d.**
- **100□ PPE□ □□□ □□□□□□ □□ □□□□ □□d □ □d□□□ r□□□ □□□□□□□□□.**
- **100□ □ □□□□□r□□□ □□□□□W□r□ Ar□□□**
- **100□ d□□□□□□□□ □□□□□□-□□□□□r□ □□□□ □□ □ □r□ □r□□ □□d 100□ □□□□□r□ □ □□□□ □□□□□□□□d □□□ □**
- **100□ □□□d□□□(□□□r □ □□□□□ □□□r□□ □□□r□□□□□r) r□□□r□□□□r□□□rd□□□ □□d r□□□□□ □□□ □□r □□rr□□□□□ □□□□□□.**
- **R□□□□□r S□□□□□ R□□□□□ □ □□ □□□□□□□ HSE □r□□r□□ □□□□ □□□□□□□ □□d 100□ □□□□□r□ □□□□□□r□□□□□□□□d □□□□ □□ □□□□□□□□□□□ □□ □r□□□ □□□□□□□ □ □□□□□□□ □□□□□□d □□□□d□□□□r□□□□□□□□.**

4. REFERENCES

1. ALL CONTRACTUAL HSE REQUIREMENTS INCLUDING THIS DOCUMENT
2. ALL APPLICABLE ACTS, RULES & REGULATIONS
3. BHEL POWER SECTOR HSE MANAGEMENT SYSTEM
   - I. HSE PROCEDURES (13.1.1)
   - II. WORK PERMITS (See Clause 13.1.2)
   - III. OPERATIONAL CONTROL PROCEDURES (See Clause 13.1.3)
   - IV. FORMATS (See Clause 21)
4. BHEL CORPORATE STANDARD PPE GUIDELINES
5. RELEVANT INDIAN STANDARDS FOR SAFETY (See Annexure 02)

(N□□□: W□□r□□□r□□□□ d□□□ □r r□□□□□□□ □□□ □□r □□□ d□□□□ □□□□□ □□□□ □□□□□□□d□□□□□□□r□□□□□□ □□ □□ □□□d)

5. BHEL HEALTH, SAFETY & ENVIRONMENT POLICY:

In BHEL, Health, Safety and Environment (HSE) responsibilities are driven by our commitment to protect our employees and people we work with, community and environment. BHEL believes in zero tolerance for unsafe work/non-conformance to safety and in minimizing environmental footprint associated with all its business activities. We commit to continually improve our HSE performance by:

- Developing safety and sustainability culture through active leadership and by ensuring availability of required resources.
- Ensuring compliance with applicable legislation, regulations and BHEL systems.
- Taking up activities for conservation of resources and adopting sound waste management by following Reduce/Recycle/Reuse approach.
- Continually identifying, assessing and managing environmental impacts and Occupational Health & Safety risks of all activities, products and services adopting approach based on elimination/ substitution/reduction/control.
- Incorporating appropriate Occupational Health, Safety and Environment criteria into business decisions, design of products & systems and for selection of plants, technologies and services.
- Imparting appropriate structured training to all persons at workplace and promoting awareness amongst customers, contractors and suppliers on HSE issues.
- Reviewing periodically this policy and HSE Management Systems to ensure its relevance, appropriateness and effectiveness.
- Communicating this policy within BHEL and making it available to interested parties.

Atul Sobti
Chairman & Managing Director

6. TERMS AND DEFINITIONS

6.0 INCIDENT

Work- related or natural event(s) in which an injury or ill health (regardless of severity) or fatality, damage to property/environment occurred, or could have occurred.

6.1 NEAR MISS

An incident where no ill health, injury, damage or other loss occurs, but it had a potential to cause, is referred to as “Near-Miss incident”.

6.2 MAN-HOURS WORKED

The total number of employee hours worked by all employees including subcontractors working in the premises.
It includes managerial, supervisory, professional, technical, clerical and other workers including contract laborers.
Man-hours worked shall be calculated from the payroll or time clock recorded including overtime. When this is not feasible, the same shall be estimated by multiplying the total man-days worked for the period covered by the number of hours worked per day. The total number of workday for a period is the sum of the number of men at work on each day of period. If the daily hours vary from department to department separate estimate shall be made for each department and the result added together.

6.3 FIRST AID CASES (FAC)

First aid cases include:

1. Visit to a physician or a licensed health care professional solely for observation or counselling
2. Conduct of diagnostic procedures like X rays, blood test including the prescription medications used solely for diagnostic purposes (e.g. eye drops to dilate eyes)
3. Using a non-prescription medicine at non-prescription strength (for medication available in both prescription and non-prescription form as recommendation by a physician or other licensed health care professional to use a non-prescription medication at prescription strength is considered medical treatment for record keeping purposes};
4. Administering tetanus immunizations (other immunizations, such as Hepatitis B vaccine or rabies vaccine, are considered medical treatment);
5. Cleaning, flushing or soaking wounds on the surface of the skin;
6. Using wound coverings such as bandages, Band-Aids TM, gauze pads, etc.; or using butterfly bandages or Steri-Strips TM (other wound closing devices such as sutures, staples, etc., are considered medical treatment);
7. Using hot or cold therapy;
8. Using any non-rigid means of support, such as elastic bandages, wraps, non-rigid back belts, etc. (devices with rigid stays or other systems designed to immobilize parts of the body are considered medical treatment for record-keeping purposes);

9. Using temporary immobilization devices while transporting an accident victim (e.g., splints, slings, neck collars, back boards, etc.).
10. Drilling of a fingernail or toenail to relieve pressure, or draining fluid from a blister;
11. Using eye patches;
12. Removing foreign bodies from the eye using only irrigation or a cotton swab;
13. Removing splinters or foreign material from areas other than the eye by irrigation, tweezers, cotton swabs or other simple means;
14. Using finger guards;
15. Using massages (physical therapy or chiropractic treatment are considered medical treatment for recordkeeping purposes); or
16. Drinking fluids for relief of heat stress.

No other treatments are considered first aid.

□.4 MEDICAL TREATMENT CASES (MTC)

An incident involved with an injury or illness that needs medical attention beyond First-aid as per 6.3 above.

□.□ **D□□□□r□□□ O□□□rr□□□□** is defined as:

(1) Collapse or failure of lifting appliances or hoist or conveyors or other similar equipment/machine;
(2) Collapse or failure of a crane, derrick, winch, hoist or other appliance used in raising or lowering persons or goods or any part thereof, or the overturning of a crane;
(3) Explosion or fire causing damage to the structure of any room or place in which persons are employed, or to any machine or plant, resulting in the complete suspension of ordinary work;
(4) Electrical short circuit or failure of electrical machinery, plant or apparatus, attended by explosion or fire, causing structural damage involving its stoppage or disuse;
(5) Explosion of a receiver or container used for the storage at a pressure greater than atmospheric pressure of any gas or gases (including air) or any liquid or solid resulting from the compression of gas;
(6) Collapse in whole or part from any cause whatsoever of any roof, wall, floor, Structure or foundation forming part of the construction site in which persons are employed;
(7) Total or partial collapse of any overburden, face, tip or embankment on the Construction site;
(8) The overturning of, or collision with any object by any bulldozer, dumper, excavator, grader, lorry or shovel loader, or any mobile machine used for the handling of any substance on the construction site.

6.6 **F□r□**: Except Dangerous occurrence, any incident involving fire.

6.7 **Pr□□□r□ D□□ □□□**: Except Dangerous Occurrences and Fire, any incident of property (materials, building, equipment etc) getting damaged.

□.□ TYPE OF INCIDENT □ACCIDENT □ THEIR REPORTING:

The categories of Incident / accident are as follows:

N□□-R□□□r□□□□ C□□□□ □r NON-LTI: (I□□□d□□ F□r□□-□d □□□□□ □□ □□r □.□ □□d MTC □□ □□r □.4)

M□□r: In this case the injured person resumes duty within 48 hours of incident.

R□□□r□□□□ C□□□□ (LTI □r L□□□ T□□ □I□□□r□ C□□□□):

M□□□r: In this case the injured person is disable for 48 hours or more and is not able to perform his duty. (as per IS 3786). It includes fatality.

All incidents must be reported orally immediately and in writing within 24 hours of time of incident. However, in case of fatality, it shall be reported to the statutory authority within prescribed timeline through proper channel. Internal reporting shall be done within 6 hours of time of the incident

□.□ TOTAL REPORTABLE FREQUENCY RATE

Frequency rate is the number of Reportable Lost Time Injury (LTI) per one Million Man hours worked. Mathematically, the formula read as:

Number of Reportable LTI x 1,000,000
Total Man Hours Worked

□.10 SE□ERITY RATE

Severity rate is the Number of days lost due to Lost Time Injury (LTI) per one Million Man hours worked. Mathematically, the formula reads as:

Days lost due to LTI x 1,000,000
Total Man Hours Worked

□.11 FREQUENCY SE□ERITY INDE□ (FSI)

Frequency Severity Index, FSI =√ FR*SR/1000

□.12 INCIDENCE RATE

Incidence Rate is the Number of LTI per one thousand manpower deployed. Mathematically, the formula reads as:

Number of LTIx1000
Average number of manpower deployed

□.1□ □OB SAFETY ANALYSIS

A job safety analysis (JSA) is a procedure which helps integrate accepted safety and health principles and practices into a particular task or job operation. In a JSA, each basic step of the job is to identify potential hazards and to recommend the safest way to do the job. Other terms used to describe this procedure are job hazard analysis (JHA) and job hazard breakdown.

□.14 SAFETY WALK

It's a walk (conducted periodically) by an official through a portion or whole of a site as an HSE officer, noting down HSE observations, speaking to concerned workmen and supervisor on observation, recording and reporting to in charges of agencies, getting the same rectified with personal follow up - to send out a strong message on Management's commitment to safety.

□.1□ HEA□Y □ COMPLE□ LIFTING

A heavy and complex lifting activity includes:

1. Lifting above 50 Tons
2. Tandem Lifting using multiple cranes
3. Total load exceeding 75% of capacity of crane
4. Lift of unusual difficulty or geometry or rigging
5. Lift over operating units
6. Any other lift as decided by site HSE / Erection

In any case, Job Safety Analysis to be carried out for any lift above 5 Tons.

□.1□ SAFETY COMMITTEE

As per the BOCW, Safety Committee shall be constituted if there are more than five hundred or more construction workers are employed at any site. As per the Factories Act, 1948 it is for 250 workers. It shall be represented by equal number of representatives of employer and construction workers.

□.1□ NIGHT WORK

Work conducted after sunset when only a fraction of total manpower is available

Section-A

Main Requirements

(Applicable in Full)

7. HSE ORGANISATION

7.1 DEPLOYMENT

7.1.1 Minimum Number (As mentioned in Factories Act or Construction Safety)

7.1.1.1 HSE Officer	7.1.1.2 HSE Supervisor	7.1.1.3 HSE Steward/Other
1 per 300 workers or part thereof as a minimum or as mandated by applicable legal requirements, whichever more stringent	1 per 150 workers or part thereof	1 per 50 workers or part thereof

7.1.1.4 The safety officers shall be engaged directly by the sub-contractor, whereas safety supervisors and safety stewards may be from the agencies engaged by the sub-contractor.

7.1.1.5 Deployment Plan:

7.1.1.5.1 These shall be minimum one HSE officer along with HSE supervisor and HSE steward in the aforesaid ratio for every shift for each unit of Boiler/ESP/Power House & TG/ Chimney/ Whole of Cooling Tower.

7.1.1.5.2 For Civil works and other BOP items, deployment shall be broadly as specified in the above table. But BHEL shall finally approve the deployment based on nature and volume of jobs, Risks and hazards associated etc.

7.1.1.5.3 The deployment plan of Safety manpower at various locations shall be submitted to BHEL for approval by subcontractor

BHEL reserves the right to demand more safety personnel than what is stipulated here and change the deployment pattern

1.2 QUALIFICATION & EXPERIENCE

All Diploma/Degree holders in Safety Engineering/Technology from All India Council for Technical Education (AICTE) Universities

1.2.1 HSE Officer	1.2.2 HSE Supervisor	1.2.3 HSE Skilled Worker Operator
A. i. Recognized degree in any branch of Engg. or Tech. or Architecture with practical experience of working in a building or other construction work in supervisory capacity for a period of not less than two years, or Recognized diploma in any branch of Engg. or Tech with practical experience of working in a building or other construction work in supervisory capacity for a period of not less than five years. ii. Recognized degree or diploma in Industrial safety ii. (Preferably) have adequate knowledge of the language spoken by majority of the workers at the construction site. **Alternatively:** B. Graduation Degree in Science with Physics & Chemistry and degree or diploma in Industrial Safety (from any Indian institutes recognized by AICTE or State Council of Tech. Education of any Indian State) with practical experience of working in a building, plant or other construction works (as Safety Officer, in line with Indian Factories Act, 1958) for a period of not less than five years.	As a minimum, (s)he shall possess: A recognized graduation Degree in Science (with Physics & Chemistry) or a recognized diploma in Engg. or Tech. with: a. Minimum Two years of practical experience in construction work environment and b. Should possess requisite skills to deal with construction safety & fire related day-to-day issues.	As a minimum, (s)he shall possess: 1. Class XII pass certificate and 2. Trained in fire-fighting as well as in safety / occupational health related subjects, with: a. Minimum two year of practical experience in construction work environment and b. Should have adequate knowledge of the local language spoken by majority of the workers at the construction site.

1.4 HSE IN-CHARGE

In case there are more than one HSE Officers with any subcontractor, one of them, who is senior most by experience (in HSE discipline), may be designated a s HSE In-Charge. Duties & responsibilities of such person shall be commensurate with that of relevant statute and primarily to coordinate with top management of Client and subcontractors.

□.1.4 A□AILABILITY AND PENALTY FOR NON-DEPLOYMENT:

Subcontractor shall ensure physical availability of safety personnel at the place of specific work location including where Height Work Permit is required/granted. No work shall be started in any area until above safety personnel & concerned Site Engineer of subcontractor are physically deployed at site.
The Subcontractor shall prepare an organization chart identifying the areas of operations, responsibilities and reporting structure of all safety personnel and submit the same to BHEL.

The subcontractor shall deploy sufficient safety officers, supervisors and safety-stewards, as per numbers & qualifications mandated in this Section since mobilization of first batch of manpower and add more in proportion to the added strength in work force. Any delay in deployment will attract a penalty at following rates:

Non-deployment of HSE Officer	–	**R□ □0000 □□r □ □□-□ □□□□**
Non-deployment of HSE Supervisor	–	**R□ □0000 □□r □ □□-□ □□□□**
Non-deployment of HSE Steward	–	**R□ 20000 □□r □ □□-□ □□□□**

Penalty shall be collected for the period of non-availability of safety personnel after allowing a grace period of 15 days for finding a replacement.

□.1.□ QUALIFICATION OF CRANE □ WINCH OPERATORS□DRI□ERS □□□:

The Crane and Winch Operators, Drivers, Riggers and other professionals deployed shall be qualified and experienced, and have valid license for the class of vehicle / machinery as applicable. The sub-contractor shall certify competence of these persons.in writing as and when they join.
Crane/Winch operator should have certificate on subject course or owner experience certificate in letterhead.

7.1.6 In case the statutory requirements i.e. State or Central Acts and / or Rules as applicable like the Building and Other Construction Workers' Regulation of Employment and Conditions of Service- Act,1996 or State Rules (wherever notified), the Factories Act, 1948 or Rules (wherever notified), etc. are more stringent than above clarifications, the same shall be followed.

7.1.7 **BILLING:** Deployment of Safety manpower as per this clause □□□□□□□ a billable item.

7.1.8 The Subcontractor shall verify & authenticate credentials of the HSE personnel detailed in this Section and furnish Bio-Data/Resume / Curriculum Vitae of the safety personnel as above for BHEL / Owner's approval, at least 1 month before the mobilization. The Subcontractor, whenever required, shall arrange submission of original testimonials / certificates of their Safety personnel, to BHEL / Owner (for verification/scrutiny, etc.)

7.1.9 Prior approval of CVs by BHEL for Safety Officer and Safety Supervisor is mandatory, however BHEL has right to check suitability of Safety Stewards as well.

2 HSE RESPONSIBILITIES

The subcontractors shall communicate the HSE responsibilities as indicated in this section to relevant employees in written Form and ensure awareness of the same

2.1 ALL EMPLOYEES

1. To be aware of, get involved in and ensure implementation of all HSE related Systems and Procedures including but not limited to:

    a) BHEL HSE Management System including HSE Procedures and OCPs
    b) Work Permit System
    c) Emergency Preparedness Response Plans
    d) Contractual HSE requirements
    e) Legal Requirements
    f) Penalty System
    g) Training requirements
2. To ensure that the persons engaged in respective area follow the safety rules like using appropriate PPEs.
3. To keep track of repetitive minor or major incident observation/ report and submit to BHEL.
4. To prepare HIRA / JSA as required and submit to BHEL for verification.
5. To record all incidents including near miss and report to BHEL.
6. To adopt safe working practices at all times and act as role model for Safety
7. To take immediate corrective action actions in case any non-conformity is observed on product / process / system with respect to Occupational Health, Safety and Environment.
8. In case any particular activity / work has extremely high consequential risk or high environmental impact, same shall be brought to the notice of BHEL Package In-charge before starting the work.
9. To interfere/ stop work as & when identified unsafe.
10. To maintain & promote improved level of house-keeping all the time at site.
11. To support/co-operate with audit team members as & when safety audits are carried out.
12. To involve in investigation, if any incident occurs in his work area.
13. To participate in safety promotional programmes.
14. To attend the safety committee meeting, if member/ invitee
15. To ensure that only fit T&Ps and qualified persons are engaged for all activities.
16. Shall ensure that person working above 2.0 meter should use Safety Harness tied to a life line/stable structure.
17. Shall ensure that materials are not thrown from height. Cautions to be exercised to

prevent fall of material from height.

18. Shall ensure that all T&Ps engaged are tested for fitness and have valid certificates from competent authorities.

□.2.2 SITE IN –CHARGE □ PACKAGE IN-CHARGES OF SUBCONTRACTOR

1. All requirements as per 7.2.1
2. **S□□□□□□□□r□ □□□□□□□ □□□□□HSE r□□□□r□□ □□□□ □□BHEL □□□□r□□□□□ □□□□□ □□ □□□□ d□□□□ □□□.**
3. Shall engage qualified safety manpower as per this document at all times.
4. Shall adhere to the rules and regulations mentioned in this document, practice very strictly in his area of work in consultation with his concerned engineer and the safety coordinator.
5. Shall screen all workmen for health and competence requirement before engaging for the job and periodically thereafter as required.
6. Shall ensure that all the workers are engaged after undergoing induction training.
7. Shall arrange for all necessary PPEs like safety helmets, belts, full body harness, shoes, face shield, hand gloves etc. before starting the job. Shall ensure that no working men /women carry excessive weight more than stipulated in Factory Rule Regulation R57.
8. Shall ensure that provisions stipulated in contract Labor Regulation Act 1970, Chapter V C.9, canteen, rest rooms/washing facilities to contracted employees at site.
9. Shall report all incidents (Fatal/Major/Minor/Near Miss) to the Site engineer /HSE officer of BHEL.
10. Shall conduct Safety Walks and safety inspections, and act as a role model for Safety.
11. Shall ensure that Horseplay is strictly forbidden.
12. Shall ensure that adequate illumination is arranged during night work.
13. Shall ensure that all personnel working under subcontractor are working safely and do not create any Hazard to self and to others.
14. Shall ensure display of adequate signage/posters on HSE.
15. Shall ensure that mobile phone is not used by workers while working.
16. Shall ensure conductance of HSE audit, mock drill, medical camps, induction training and training on HSE at site.
17. Shall ensure full co-operation during Client/External /Customer HSE audits.
18. Shall ensure submission of look-ahead plan for procurement of HSE equipment's and PPEs as per work schedule.
19. Shall ensure adequate valid fire extinguishers are provided at the work site.
20. Shall ensure availability of sufficient number of toilets /restrooms and adequate drinking water at work site and labor colony.
21. Shall ensure adequate emergency preparedness
22. Site In-charge also involve in the induction training so as to share knowledge of some incident and guide the worker to perform work safely.
23. Shall ensure power source for hand lamps shall be maximum of 24 v.
24. Shall ensure temporary fencing should be done for open edges if Hand – railings and Toe-

guards are not available.

25. Shall be responsible for the periodic testing of T&Ps (winches / crane /hydra/tools/equipment so on.) and Pressure Vessels as per applicable codes and submit report to BHEL
26. Shall be member of site HSE committee and attend all meetings of the committee

□.2.□ HSE OFFICER OF SUBCONTRACTOR

1. All requirements as per 7.2.1
2. Carry out safety inspection of Work Area, Work Method, Men, Machine & Material, P&M and other tools and tackles.
3. Facilitate HIRA and Aspect/Impact Study in the area and ensure control measures.
4. Highlight the requirements of safety through Tool-box / other meetings.
5. Help concerned HOS to prepare Job Specific instructions for critical jobs.
6. Maintain record and conduct investigation of all incident/dangerous occurrences & recommend appropriate safety measures.
7. Advice & co-ordinate for implementation of HSE permit systems, OCPs & MPs.
8. Convene HSE meeting & minute the proceeding for circulation & follow-up action.
9. Plan procurement of PPE & Safety devices and inspect their healthiness.
10. Report to BHEL on all matters pertaining to status of safety and promotional programmes at site level.
11. Encourage raising Near Miss Report on safety along with, improvement initiatives on safety.
12. Facilitate administration of First Aid
13. Facilitate screening of workmen and safety induction.
14. Conduct fire Drill and facilitate emergency preparedness
15. Design campaigns, competitions & other special programs to promote safety in the workplace.
16. Notify non-conformance to safety norms observed during site visits / site inspections.
17. Recommend to Site In-charge, immediate discontinuance of work until rectification, of such situations warranting immediate action in view of imminent danger to life or property or environment.
18. To decline acceptance of such PPE / safety equipment that do not conform to specified requirements.

□.2.4 HSE SUPER□ISOR OF SUBCONTRACTOR

1. All requirements as per 7.2.1
2. To assist Safety officer

□.2.□ HSE STEWARD □OBSER□ER OF SUBCONTRACTOR

1. All requirements as per 7.2.1
2. To monitor allotted area for Safety violations, take required action and inform the concerned Safety Supervisor / Officer

3. To assist Safety Officer and Safety Supervisor

□.2.□ HSE DOCUMENTS□SYSTEMS □ PROCEDURES:

BHEL shall provide the subcontractor soft copies of all applicable HSE Procedures, Work Permits, Operational Control Procedures, Formats and any other instructions required for the implementation of HSE Management System before commencing operations at site. Subcontractor shall ensure the availability of the same.

□.2.□ IMPORTANT SITE EHS RULES RESULTING IN POSSIBLE E□PULSION FROM SITE

- Pre-employment Medical fitness is compulsory for all workers.
- EHS induction in mandatory for all new workers, supervisor and engineers, subcontractor managers etc.
- No visitors are allowed for site visit without safety induction.
- **M□□d□□□r□ PPE□ □r□**

  - ✓ *Safety helmet,*
  - ✓ *Hard toe safety shoes,*
  - ✓ *Safety glasses*
  - ✓ *Reflective vest*
  - ✓ *Full/half sleeve (at least 4-inch-long) shirt*
  - ✓ *Full length pant/trousers for male and preferably Salwar Kameez for female*

- □□r□ T□□□r□□□□ S□□□□□ R□□□□

  - Violation of Fall protection / not anchoring & wearing safety harness above 6 feet,
  - Work without PTW
  - Child labor at site

- Restricted Use of cell phone in the working zone, operating vehicle/crane and at height. Encourage the people not to bring mobile phones inside the project premises.
- All vehicle being used at site to be in good condition in all respect.
- All electrical installations should have individual 30 mA ELCBs
- **F□□□□□□**: Fighting anywhere on the Project site, including in parking areas, is strictly forbidden; violators will be barred from site and possibly subjected to legal action by local authorities.
- **H□r□□□□□**: Running, pushing, practical jokes, and other horseplay are forbidden on the project site, including in parking areas.
- **G□□ □□□□**: Gambling on the Project site is not permitted
- **A□□□□□□ Dr□□□**: Intoxication or possession of alcohol or illegal drugs is strictly forbidden.
- **W□□□□□**: Possession of weapons on the Project site is strictly prohibited
- **A□□□□□□ M□□r□□**: No asbestos material is allowed to use in Project Site
- **H□r**: Anyone working on site property with scalp hair longer than the top of his/her shoulders must tie-up and restrains the hair within the hard hat or coveralls, shirt or jacket collar.
- □□□ □r□: Loose necklaces, dangling earrings and bracelets shall not be worn when working on the Project site.

- **C**ontact **L**ens : While the site does not prohibit the wearing of contact lens, BHEL Project does not recommend their use.

- **U**se of **E**mpty **Dr**ums : Use of empty drums to climb up and work is banned. Proper stool/ ladder/ stage required to be used if intended to work at height.
- Projects must comply in full with all applicable EHS local and national legislation. In circumstances where there is a conflict between local or national legislation and client requirements, the higher (more protective) requirement must prevail.
- All persons working on suspended scaffolds/cradles/gondolas must wear and use appropriate fall prevention equipment so as to protect them effectively at all times when they are at risk from any failure of any part of the scaffold/cradle/gondola, including its suspension system

- **C**ons ruction **Tr**ucks/Vehicles

  - ✓ Vehicles must be equipped with proper seat belts for driver and passengers. All persons riding in vehicles must be advised of the requirement that seat belts are to be used whenever the vehicles are being operated.
  - ✓ The subcontractor is responsible for assuring the overall safe condition of vehicles assigned to its projects.
  - ✓ The speed limit on the project site is a maximum of 20 Km/hr.
  - ✓ Any person found operating or driving in a reckless or careless manner without regard for the safety of other employees or the general public will be immediately removed for the equipment they were operating and permanently prohibited from operating or driving any equipment on the project.
  - ✓ Any mobile equipment found to be unsafe or defective must be immediately removed from service and sent for repair or replacement. The subcontractor must ensure that the proper repairs have been made prior to putting the equipment back into service.

- **C**ons ruction **M**ate rial **H**an **d**ling **H**eavy **E**quipment

  - ✓ No equipment may be modified without equipment manufacturer's authorization.
  - ✓ Rollover Protective Structures must be provided for all equipment as required.
  - ✓ Seat belts must be provided and used by operators of all equipment that has a Rollover Protective Structure.
  - ✓ All bi-directional equipment must be equipped with an operable horn that must be used as needed when the machinery is moving in either direction.
  - ✓ All bi-directional equipment must also have an operable alarm in addition to the horn.
  - ✓ All equipment must be provided with a multi-purpose (class A, B, and C) fire extinguisher mounted in an easily accessible location.
  - ✓ Braking systems, controls, safety devices must be maintained in effective operating condition.
  - ✓ The operator must inspect the equipment at the beginning of the shift and test for acceptable

- ✓ operation as per the equipment's manufacturer's instructions. Inspections must be documented and filed.
- ✓ Only qualified personnel must be allowed to operate equipment. Qualification must be documented and filed.

In case any worker violates any of the EHS rules identified by BHEL as above, following punitive action shall be taken:

F□r□□O□□□□□	S□□□□d O□□□□□	T□rd O□□□□□	F□□r□ O□□□□□
Oral warning	*Gate Pass Punched*	*Gate pass punched (second)*	*Gate Pass Punched(third) and person sent out of the gate* *Photo of concerned worker to be displayed on Notice boards and prominent locations.*

BHEL has the right to send out such person even earlier than fourth offence after considering the severity of the offence and/or the persons track record related to following general/EHS rules.

BHEL reserves right to expel even concerned supervisor or engineer as well in case of repeat of such cases of indiscipline.

N□□:
The appellate authority in this case shall be the BHEL Site In-charge whose decision shall be final on the matter and binding on all parties.

8. PLANNING FOR HSE

A. Id□□□□□□□□ H□□□rd□ □R□□□□ □ A□□□□□□ □I□ □□□□□ □□d □□ □□□□ □□□□□□ □□□□r□□□ □□□□r□□

1. Subcontractor shall identify all OHS Hazards and Risks applicable to all activities in scope as per *HSEP01: HSE Procedure for OHS Hazards and Risks*, and plan & implement the required control measures.

2. Subcontractor shall identify all Environmental Aspects and Impacts applicable to all activities in scope as per *HSEP02: HSE Procedure for Environmental Aspects and Impacts*, and plan & implement the control measures.

B. R□□□□□r □□R□□□□□□□□□:

Subcontractor shall prepare a register of applicable rules and regulations in the scope as per

HSEP03: HSE Procedure for Register of Regulations and plan to ensure compliance.

The detailed plans and registers in A and B to be submitted to BHEL for review and approval within 60 days of start of work at site.

N□□□: The plans above are dynamic and shall be periodically reviewed as per BHEL requirement.

□.1 MOBILISATION OF MACHINERY □EQUIPMENT □TOOLS

1. Subcontractor shall furnish to BHEL, the Test Certificates issued by the jurisdictional competent persons of machinery, equipment and other T&Ps to be deployed at site, before deployment. BHEL reserves the right to disallow the same if found non-conforming to HSE / legal requirements

2. As a further measure to ensure that machinery, equipment and tools being mobilized to the construction site are fit for purpose and are maintained in safe operating condition and comply with legislative and owner requirement, inspection shall be arranged by in-house expert / competent authority (preferable) for acceptance. (**R□□□r□F□r□ □□: HSEP:14-F1□**)

□. **T□□ □□□□□□ □□□□□□□□d□r□d □□r □□□□ □□r□□□□ □□□□□□□□□□□d□ □□□□□□□□□ □□ □□□ T□P □□□□□□ □□□ □□□d□r d□□□□ □□□. C□□□□□□□□□□□H□dr□ □r□□□ □ □□□ □□rr□□□□ □□ □r□□□□□□□□□□□□□ □□r□ □□□□d. O□□□r □ □d□□□ □□□□ F□ □r TR□ □□r□□□ □□E□□□r□□ □r □□□□□□□□□□□□□□□□□□ □□r□ □□□□d.**

4. In the course of work, the subcontractor shall notify the BHEL Engineer, of his intention to bring on to site any equipment or any container, with liquid or gaseous fuel or other substance which may create a hazard.

5. The Engineer shall have the right to prescribe the condition under which such equipment or container may be handled and used during the performance of the works and the subcontractor shall strictly adhere to such instructions.

6. The Engineer shall have the right to inspect any construction tool and to forbid its use, if in his opinion it is unsafe. No claim due to such prohibition will be entertained.

7. Following items should be only ISO certified and not more than 2 yr. of purchase
   i. Chain pulley block
   ii. Wire rope slings
   iii. Grinding machine and wheel and buffing wheel
   iv. Gas cutting equipment
8. Following equipment should not be more than 5 Yr. old
   1. Welding machine
   2. Vibrator Machine
   3. Concrete cutter
   4. DB/Electrical panel
9. **O□□□□ I□r□□□r□□□□r□** - subcontractor shall arrange a computer / Laptop with Network

connection, chair and table for HSE Staff to facilitate HSE reporting and recordkeeping.

□.2 MOBILISATION OF MANPOWER

1. As a measure to ensure that manpower being mobilized to the construction site is fit and competent for safe working, screening arrangement shall be made by the sub-contractor to ensure fulfillment of contractual as well as legislative requirement by:

i. Ensuring the required qualification/ training/ certification/ license and experience for the job as per Section 7 of this document & applicable legal requirements

ii. **M□d□□□□ C□□□□□□:** Examination of medical fitness shall be conducted through qualified medical professional for all workers to be deployed. (Record: Format No. HSEP14:F02)**.** For height workers, height phobia test to be carried out as qualification criteria.

iii. **I□d□□□□□ Tr□□□□□:** Induction training of all workers to be ensured as per clause 9.1 and HSEP04: *HSE Procedure for Training & Awareness (Record:* Format No. HSEP14:F03)

Only on successfully meeting above criteria, permanent gate passes to be issued.

2. The subcontractor shall strictly adhere to the maximum daily working hours and other requirements as per applicable laws and shall not engage any employee below 18 years of age.
3. The subcontractor shall take special care of the employees affected with occupational diseases under rule 230 and schedule II of BOCW Rules. The employees not meeting the fitness requirement should not be engaged for such job.
4. Ensure that the regulatory requirements of excessive weight limit (to carry / lift / move weights beyond prescribed limits) for male and female workers are complied with.
5. System for Issue of Gate Passes to authorized personnel only shall be ensured at site
6. The subcontractor shall keep accurate and updated records of all manpower preferably in soft form
7. The subcontractor shall ensure appropriate infrastructure for workers as per Clause 8.4.

□.□ PRO□ISION OF PPE□

1. Adequate numbers of Personnel Protective Equipment (PPEs), will be made available at site & their effectiveness and regular use by all will be ensured

2. The PPEs shall conform to the relevant standards as listed in Annexure 02, and bear ISI mark.

3. The following matrix recommends usage of minimum PPEs against the respective job. For details, the respective OCPs to be referred.

S□. N□	T□□□ □□□ □r□	S□□□□□□d PPE□
1	Work at height	Double lanyard full body harness with rope grab (as applicable), retractable Fall arrestor (specific cases), Safety nets (single / double)
2	Concrete and asphalt mixing	Nose mask, hand glove, apron, gum boot, goggles
□	Welders/ Grinders/ Gas cutters	Welding/face screen, apron, hand gloves, nose mask and ear muffs if noise level exceeds 90dB. Helmet fitted with welding shield is preferred for welders, safety goggles
4	Stone/ concrete breakers	Ear muffs, safety goggles, hand gloves
□	Electrical Work	Rubber hand glove, Electrical Resistance shoes, Arc-flash resistant suit.
□	Insulation Work	Respiratory mask, Hand gloves, safety goggles
□	Grit/Sand blasting	Blast suit, blast helmet, respirator, leather gloves, safety goggles
□	Painting	Plastic gloves, Respirators (particularly for Spray painting)
□	Radiography	As per BARC guidelines
10	General	Helmets, Safety Shoes Reflective vests, ear plugs, nose masks, safety goggles

4. The exact PPEs required for a particular task shall be chosen to ensure there are multiple lines of defense against accident or injury. All applicable safety precautions for a job shall be ensured notwithstanding the duration or perceived importance of the task.
5. Additionally, the BHEL safety officer may demand additional PPEs based on specific requirement
6. The applicability of PPEs shall be as per the concept of Hierarchy of controls, i.e.: Elimination->Substitution->EngineeringControls->AdministrativeControls-PPEs
7. Relying solely on PPEs without other applicable controls to be strictly avoided.
8. The issuing agency shall maintain register for issue and receipt of PPEs (Format No. HSEP: 14-F06A). All the PPEs shall be checked for quality before issue and the shall be periodically re-checked. The users shall be advised to check the PPEs themselves for any defect before putting on. The defective ones shall be replaced.
9. The body harnesses shall be serial numbered.
10. All worker should wear reflecting Jacket during both shift Day/Night.
11. Where workers are employed in sewers and manholes, which are in use, the subcontractor shall ensure that the manhole covers are opened and ventilated at least for an hour before the workers are allowed to get into manhole, and the manholes so opened shall be cordoned off with suitable railing and provided with warning signals or boards to prevent incident to the public
12. Besides the PPEs mentioned above, the persons shall use helmet, safety shoe and reflective vest at all times. The visitors shall use Helmet and any other PPEs as

deemed appropriate for the area of work.

13. Following color scheme for Helmets to be maintained:
    a. Workmen: Yellow
    b. Safety staff: Green or white with green band
    c. Electrician: Red
    d. Others including visitors: White
14. The Helmets shall have logo or name (abbreviation of agency name permitted) affixed or printed on the front along with the person's gate pass no. & blood group. An awarded worker shall have reflective logo

□.4 ARRANGEMENT OF INFRASTRUCTURE

The subcontractor is responsible for ensuring and maintaining the required HSE infrastructure at site as described in this Section

□.4.1 DRINKING WATER

1. Drinking Water Storage Tanks shall be provided and maintained at suitable places at different elevations / locations to ensure easy accessibility. The tank/container shall be kept on a platform at an elevation of at least 2 feet and should be covered:

2. **C□□□r□□□□ □d Q□□□□□:** The design of Drinking Water Storage Tank (DWST) shall be submitted to BHEL for approval prior to initiating construction. Provision of 5 liter water daily for each worker to be maintained.
3. **L□□□□□:** DWST should be labeled as "Drinking Water". Date of last cleaning, next due date shall be indicated on the container besides Date of source testing as per IS 10500.
4. Cleaning of the DWST shall be ensured at least once in a week. Mild cleaning detergents as used for cleaning vessels shall be applied and scrubbers (3M or equivalent) shall be used for removing scales and deposits on the inside surface. The tank shall be thoroughly cleaned with potable water only before it is refilled.
5. Suitability of the water source should be tested as per IS10500.
6. For all tanks containing water unsuitable for drinking, prominent "Do Not Drink" signage shall be pasted in English, Hindi and local language.
7. In Hot Work and other critical areas, drinking water shall be made available near the activity
8. Provision of supplying drinking water to height workers and those working in difficult to reach

areas shall be made available through dedicated personnel.

8.4.2 **PRO□ISION OF LATRINES AND URINALS AT SITE** (Ref: Interstate Migrant Workmen (Regulation & Employment and Act, 1979) read with The Inter-State Migrant Workmen (Regulation of employment and conditions of service) central rules, 1980 (PI refer rule no. 42)

LATRINES

1. Latrines shall be provided in every establishment on the following scale, namely: -

   a. Where females are employed, there shall be at least one latrine for every 25 females;
   b. Where males are employed, there shall be at least one latrine for every 25 males:

   Provided that where the number of males or females exceeds 190, it shall be sufficient if there is one latrine for 25 males or females, as the case may be, up to the first 100, and one for every 30 thereafter

2. Every latrine shall be under cover and so partitioned off as to secure privacy, and shall have a proper door and fastenings.
3. Where workers of both sexes are employed there shall be displayed outside each block of latrine and urinal a notice in the language understood by the majority of the workers "**F□r M□□ O□□□**", or "**F□r W□□ □□ □ □□□**", as the case may be.
4. The notice shall also bear the figure of a man or of a woman, as the case may be.

URINALS

5. There shall be at least one urinal for male workers up to fifty and one for female up to fifty employed at a time:
6. Provided that where the number of male or female workmen, as the case may be, exceeds 500 it shall be sufficient if there is one urinal for every fifty females up to the first 500 and one for every 100 or part thereof thereafter.
7. The urinals shall be designed and located so as to ensure privacy.
8. In case a structure encompasses multiple floors, urinals shall be provided suitably for quick access
9. The latrines and urinals shall be conveniently situated and accessible to workers at all times at the establishment.
10. The latrines and urinals shall be adequately lighted and shall be maintained in a clean and sanitary condition at all times.
11. Latrines and urinals other than those connected with a flush sewage system shall comply with the requirements of the public health authorities.
12. Water shall be provided by the means of tap or otherwise so as to be conveniently accessible in or near the latrines and urinals.

□.4.□ WASHING FACILITIES

1. In every workplace, adequate and suitable facilities for washing shall be provided and maintained.
2. Separate and adequate cleaning facilities shall be provided for the use of male and female workers. Such facilities shall be conveniently accessible and shall be kept in clean and hygienic

condition and dully illuminated for night use.

3. Overalls shall be supplied by the subcontractor to the workmen and adequate facilities shall be provided to enable the painters and other workers to wash during the cessation of work.

□.4.4 PRO□ISION OF REST SHELTER FOR WOKERS

Proper Sheds & Shelters big enough to accommodate all possible workers shall be provided for workers to rest during break. Taking rest at height, in activity area and other hazardous locations shall not be allowed.

The drawing of such sheds shall be submitted to BHEL for approval before construction.

□.4.□ MEDICAL FACILITIES

R□□r S□□□□ B □r □□□□□□□□ □□r□□□r□□ □□□ □□r□□□□ □□ C□□□□ □.4.□.1

8.4.5.1 MEDICAL CUM FIRST-AID CENTER

a) A medical center shall be setup at site with basic facilities for handling medical emergencies. The medical center shall be developed independently by BHEL/an agency as specified in the contract and run jointly by all agencies on proportionate sharing basis as stipulated in the contract.
b) A qualified medical professional, not less than MBBS, shall be deployed at medical center as stipulated in the contract.(Part-time or full time as decided at the site).
c) There shall be a full-time trained first aider and a nurse. Depending upon the working hours at the site, First-aider shall be deployed accordingly.
d) The center shall have all articles as per Schedule IV of BOCW(Central) Rules'1998. In addition,, one Stokes basket stretcher shall be available.
e) An ambulance shall be deployed for every 1000 persons along with trained driver and accessories as per schedule V of Central BOCW Rules'1998. Depending upon the working hours at the site, First-aider shall be deployed accordingly.
f) The center shall be adequately equipped for Resuscitation, Immobilisation, Dressing, dealing with poisoning cases including snake and insect-bites and sufficient stock of emergency medicines as prescribed by the qualified medical professional as per point (b)

□.4.□.2 IMPORTANT

g) If there is no specific mention of responsibility of deployment or setting up of any of the above facilities and operating expenses thereof, BHEL site management shall have the liberty to give this responsibility to any of the contractors on cost sharing basis.
h) Medical waste shall be disposed as per prevailing legislation (Bio-Medical Waste –Management and Handling Rules, 1998)
i) Every injury shall be treated, recorded and reported.
j) All First Aid injuries shall be recorded as per Format No. HSEP:14-F17
k) List of qualified first aiders and their contact numbers to be displayed at conspicuous places.

□.4.□.□ FIRST AID

A. I□ □dd□□□□□ □□ □.4.□.1 □2□ T□□ □□□□□□□r□□□□r □ □□ B□□□r□ESP□TG□C□□□□□□□:

1. Provide necessary first aid facilities for every work place.
2. Ensure availability of qualified First-aider throughout the working hours.
3. Every injury shall be treated, recorded and reported.
4. Refresher course on first aid shall be conducted as necessary.
5. List of qualified first aiders and their contact numbers to be displayed at conspicuous places.
6. All First Aid injuries shall be recorded as per Format No. HSEP:14-F17

B. FIRST AID BO□

1. The first aid box shall be maintained by first aider who shall always be readily available during the working hours of the work place.
2. **D□□□□□ □□F□r□□A□d B□□:**
   a) Details of contents of first aid box is given in **A□□□□r□ 0□**. A slip of contents shall be pasted on the First Aid Box with following details:

      Name, Quantity, Expiry Date, Checked by…
   b) First Aider's name and contact no to be displayed on the box.
   c) The first aid box shall be distinctly marked with a Green Cross on white background.
   d) The box shall be properly secured with lock & key to avoid misuse
7. The first aid boxes should be placed at various locations so as to make them available within easy reach of hazardous activities and at the quickest possible time.
8. The subcontractor shall ensure that the Supervisors and Engineers are adequately trained for attending to any emergency.
9. Monthly inspection of First Aid Box to be conducted by the subcontractor as per Format no. HSEP:14-F01

□.4.□.4 HEALTH CHECK UP

The persons engaged at the site shall undergo health checkup as per the **F□r□ □□□□. HSEP:14-F02** before induction. The persons engaged in the following works shall additionally undergo regular health checkup using same Format at least once in a year:

Height workers	Drivers/crane operators/riggers	Confined space workers
Shot/sand blaster	Welding and NDE personnel	Any person referred by BHEL

□.4.□.4.1 HEIGHT PHOBIA TEST

1. The persons engaged in working at heights (above 2 meters) to be assessed for Height Phobia and associated conditions.
2. Such workers are to be allowed only on successful completion of this test, otherwise they shall be allocated ground based jobs. IDs / Height passes shall be issued to such workers.

□.4.□ PRO□ISION OF CANTEEN FACILITY

M□□□ □□ □r □□□□r □□□□□□□□□ □□ □□ □□□□r□d □□ □□r BOCW (R□□ 244) □F□□□r□□ A□□□ □□□□□□□□ □□□□□ □□r□ □□□□ □□□□ □□□:

1. Canteen facilities shall be provided for the workmen of the subcontractor inside the project site.
2. Proper cleaning and hygienic condition shall be maintained.
3. Proper care should be taken to prevent biological contamination.
4. Adequate drinking water should be available at canteen.
5. Fire extinguisher shall be provided inside canteen.
6. Regular health check-up and medication to the canteen workers shall be ensured.
7. Canteen waste to be disposed of in compliance with law
8. Domestic LPG cylinder shall not be used
9. Canteen should be periodically inspected using standard checklist finalized along with BHEL

□.4.□ PRO□ISION OF ACCOMMODATION □LABOR COLONY

1. The subcontractor shall provide to every workman (within fifteen days of the commencement of the employment of migrant workmen):

a) In case he is accompanied by any other member of his family, a suitable barrack so as to accommodate one room having at least a floor area of 10 square meters, a verandah and adequate additional covered space for cooking food as well as one common sanitary latrine, one common bathroom for every three such quarters; and

b) In case he is unaccompanied by any other member of his family, a suitable barrack so as to accommodate not more than ten such migrant workmen, having at least a floor area of not less than 6.5 square meters for each such migrant workman making use of the barrack, a verandah and adequate additional covered space for cooking food as well as one common sanitary latrine and one common bathroom for every ten such migrant workmen

2. Every quarter and the barrack shall be so constructed as to afford adequate ventilation, protection against heat, wind, rain and shall have smooth, hard and impervious floor surface.
3. The quarters or the barracks, as the case may be, shall be at a convenient distance from the establishment and shall have adequate supply of wholesome drinking water.
4. The area in which the quarters and/or barracks are located as well as the latrines and bathrooms provided therein shall be kept in a clean and sanitary condition at all times.
5. Regular housekeeping of the labor colony shall be ensured.
6. Availability of Bathing/ washing bay to be ensured

7. Room ventilation and safe electrification to be ensured
8. MSDS of LPG shall be put up prominently and shall be included in the induction training also.
9. The labor colony shall be secure so that only authorized persons have access to it.
10. Availability of local market to be ensured by the Sub-contractor
11. A “Suggestion Register” shall be made available at the labor colony for workers. The feedback shall be reviewed on weekly basis and acted upon.
12. Labor colony shall be inspected fortnightly by Subcontractor Safety Officer & HR executive, and report submitted to BHEL as per Format No. HSEP:4-F16
13. **F□□□□□□ □□Cr□□□□□ –** to be provided wherein more than fifty female workers are deployed
14. Provisions of Clause 8.4.1, 8.4.2 and 8.4.3 shall be applicable on labor colony as well

□.4.□ PRO□ISION OF EMERGENCY □EHICLE

Dedicated emergency vehicle shall be made available at workplace by subcontractor for evacuation of victim from site.
However, Ambulance shall be used exclusively for transporting victim to hospital

□.4.□ PEST CONTROL

Regular pest control should be carried out at all offices, mainly laboratories, canteen, labor colony and stores by the subcontractor.

□.4.10 SCRAPYARD

1. Scrapyard shall be developed by subcontractor to store metal scrap, wooden scrap, waste, hazardous waste.
2. Scrap/Waste shall be segregated as Bio-degradable and non-bio-degradable and stored separately.

□.4.11 ILLUMINATION

1. The subcontractor shall provide adequate lighting facilities e.g. flood lighting, hand lamps, area lights etc. to ensure adequate lighting at all work places & their approaches including passage ways as per IS: 3646 (Part-II) at all times. Indicative recommended values are given below:

S. N□	L□□□□□□□	L□□ L□□□□
A.	**Construction Site**	
1	Outdoor areas like store yards, entrance and exit roads	**20**
2	Platforms	**50**
3	Entrances, corridors and stairs	**100**
4	General illumination of work area	**150**
5	Rough work like fabrication, assembly of major items	**150**

6	Medium work like assembly of small machined parts	**300**
7	Fine work like precision assembly, precision measurements etc.	**700**
8	Sheet metal works	**200**
9	Electrical and instrument labs	**450**
B.	**Office**	
1	Outdoor area like entrance and exit roads	**20**
2	Entrance halls	**150**
3	Corridors and lift cars	**70**
4	Lift landing	**150**
5	Stairs	**100**
6	Office rooms, conference rooms, library reading tables	**300**
7	Drawing table	**450**
8	Manual telephone exchange	**200**

In case any area is not mentioned above, the applicable illumination for the same shall be specified by BHEL based on applicable standards and international norms

1. Level of illumination shall be checked periodically using a calibrated lux meter and recorded for each work area on minimum weekly basis as per Format No. HSEP:14-F21
2. Lamp (hand held) shall not be powered by mains supply but either by 24V or dry cells.
3. Lamps shall be protected by suitable guards where necessary to prevent danger, in case of breakage of lamp.
4. Emergency lighting provision for night work shall be made to minimize danger in case of main supply failure.

9. HSE TRAINING & AWARENESS

□.1 HSE INDUCTION TRAINING

1. All persons entering into project site shall be given HSE induction training before being assigned to work, which shall be imparted through audio-visual medium and shall be of minimum 2-hour duration.

2. Any single trainee batch size should not exceed 40.

3. Proper safety wear & gear must be issued to all the workers being registered for the induction (i.e., Shoes/Helmets/Goggles/Leg guard/Apron etc.)

i. They must arrive fully dressed in safety wear & gear to attend the induction.
ii. Any one failing to conform to this safety wear& gear requirement shall not qualify to attend.

4. In-house induction training subjects shall include but not limited to:

i. Briefing of the Project details and importance of employee for the project and for the nation.
ii. Safety related cardinal rules, objectives and targets.
iii. Site HSE rules.
iv. Site HSE hazards and aspects.
v. First aid facility.
vi. Emergency Contact No. and procedures
vii. Details of Fire prevention and emergency response systems & procedures at site.
viii. Requirement of incident / near miss reporting by all.
ix. Accident case studies
x. Rules to be followed in the labor colony (if applicable)

5. Evaluation to be carried out after training and induction training to be repeated in case of failure of participant in evaluation

6. On completing subcontractor's in-house HSE induction, each employee shall sign an induction training form (format no. HSEP: 14-F03) to declare that he had understood the content and shall abide to follow and comply with safe work practices. They may only then be qualified to be issued with a personal I.D. card, for access to the work site (provided Health Checkup is over).

□.2 HSE TOOLBO□ TALK

1. HSE Tool Box talk shall be conducted by frontline foreman/supervisor of subcontractor to specific work groups daily prior to the start of work. The agenda shall consist of the following:

   i. Visual checkup of workers regarding health, any signs of fatigue, intoxication etc.
   ii. Details of the job being intended for immediate execution.
   iii. The relevant hazards and risks involved in executing the job and their control measures.
   iv. Specific site condition to be considered while executing the job like high temperature, humidity, unfavorable weather etc.
   v. Recent non-compliances observed.
   vi. Appreciation of good work and warning for any unsafe acts done by any person.
   vii. Any doubt clearing session at the end

2. Record of Tool box talk shall be maintained as per Format no. HSEP:14-F04

□.□ TRAINING ON HEIGHT WORK

Due to the large percentage of fall from height in incidents, training of minimum 2-hour duration on height work shall be imparted to all height workers by in- house / external faculty for every batch of new inductees. The training shall include following topics:

1. Inspection of work area, access and egress w.r.t height hazards
2. Use of PPEs; use of fall arrester, retractable fall arrester, life line, safety nets etc.
3. Safe climbing through monkey ladders.
4. Inspection of PPEs.
5. Medical fitness requirements.
6. Mock drill on rescue at height.
7. Dos & Don'ts during height work.

8. Accident case studies

In case, above is organized by BHEL, proportionate cost shall be borne by subcontractors

□.4 HSE TRAINING DURING PRO□ECT E□ECUTION

1. HSE training shall be arranged by subcontractor as per the need of the project execution and recommendation of BHEL.
2. The topics of the HSE training shall be as follows but not limited to:

i. Hazards identification and risk analysis & Identification of Environmental Aspects / Impacts
ii. Work Permit System
iii. Learning from past incidents
iv. First aid, Firefighting & Fire-warden training
v. EMS and OHSMS
vi. T & Ps fitness and operation
vii. Electrical & Chemical safety
viii. Welding, NDE & Radiological safety
ix. Material handling.

3. Safety awareness and on-the-job training programmes shall be carried out at site for all workers periodically. Periodicity to be decided by BHEL but shall be minimum once in six months
4. Penalty Training – In case of any incident, the involved person, group or agency shall undergo a penalty HSE training for a minimum period of 2 hrs or as decided by BHEL.
5. In case it is not possible to provide training to all workers at once, same shall be imparted in Batch-wise manner so as to cover all workers with specified periodicity.
6. An up-to-date record to be maintained with attendance of participants and trainers preferably in soft copy as per Format No. HSEP:14-F03.
7. Every employee of agency should be provided at least 2 hr. safety training in every month.

In case, above is organized by BHEL, proportionate cost shall be borne by subcontractors

10. HSE PROMOTION: SIGNAGE, POSTERS, COMPETITION, AWARDS ETC

10.1 DISPLAY OF HSE POSTERS AND BANNERS

Site shall arrange appropriate posters, banners, slogans in local/Hindi/English languages at work place.

10.2 DISPLAY OF HSE SIGNAGE

Appropriate HSE signage shall be displayed at the work area to enhance awareness of HSE workmen and passersby about the work going on and do's and don'ts to be followed.

10.□ COMPETITIONS ON HSE□AWARDS □ REWARDS

1. Subcontractor shall arrange competitions (slogan, poster, essay etc.) on HSE for workers and employees from time to time (Safety day, World Environment Day etc. minimum one such function each month) and winners will be suitably awarded during the functions.

2. Subcontractor shall identify workers following good HSE practices and reward them from time to time as encouragement to follow good HSE practices.

3. Alternatively, if a common monthly function is organized at site, subcontractor shall participate in the same so that a minimum frequency of one such function per month is maintained.

10.4 HSE AWARENESS PROGRAMMES

Subcontractor shall arrange HSE awareness programmes periodically on different topics including medical awareness for all personnel working at site from time to time including officials involved in execution.

11. HSE COMMUNICATION AND PARTICIPATION

11.1 MONTHLY HSE REPORTING

1. HSE activities shall be reported to BHEL monthly as per Format no. HSEP: 14-F05. The reporting medium can be hard/soft as per BHEL requirement.

2. The period of reporting shall be 25th of the preceding month to 24th of the present month and report shall be submitted by the end of the calendar month or as conveyed by BHEL.

3. BHEL can modify the reporting requirements as per requirement

11.2 HSE E□ENT REPORTING

1. Important HSE events like HSE Training, Mock / Fire/Rescue Drills, Medical camp etc. organized by subcontractor shall be reported to BHEL in detail with photographs

2. Celebration of important days like National Safety Day, World Environment Day etc. shall also be reported likewise.

11.□ HSE INCIDENT REPORTING

All incidents (near misses, property damage, first-aid cases, minor, major and fatal incidents) shall be reported to BHEL as they happen through SMS and Hard/Soft copy as per Format No. HSEP: 14-F22

11.4 HSE SUGGESTIONS

All workers and employees to be encouraged to provide suggestions for improvement in

Health, Safety & Environment at site. The suggestions to be recorded in a "Suggestions Register". Suggestions to be reviewed and those having potential of significant beneficial effects are to be implemented, and recognition / award to be given to the individual.

11. CLIENT COMMUNICATON

All HSE related communication from BHEL, customer / external statutory and regulatory agencies to be handled on priority. The relevant issues to be resolved in expeditious manner

11. RECORDS OF COMMUNICATON

Records of all communication and their responses as detailed above shall be maintained by subcontractor in hard / soft copy and produced when required.

12. INCIDENT REPORTING, INVESTIGATION & CORRECTIVE ACTION

1. A conducive environment for reporting of near misses and other incidents shall be developed at site through system of rewards etc.
2. Priority to be given to ensure medical treatment of the victim. Victim to be given immediate First Aid and transported to Medical Facility in a well-equipped Ambulance
3. All incidents, as they happen, shall be reported to BHEL immediately over phone/SMS/Whatsapp/mail and then in Format No. HSEP:14-F22 within 24 hrs. of occurrence. Immediate SMS shall be sent to concerned Package In-charge with following Details:
    a. Project & Customer Name:
    b. Subcontractor Name & Scope:
    c. Incident Area:
    d. Number of Injured / Fatalities:
    e. Date & Time of Accident:
    f. Incident Description in few lines:

    No incident shall be hidden
4. Records of all incidents shall be maintained in hard / soft copy as per Format No. HSEP:14-F23.
5. For all incidents:
    a. The incident area, equipment / tools involved, documents & records etc. shall be maintained as-it-is pending investigation
    b. Root Cause Analysis (RCA) to be conducted and corresponding Corrective / Preventive Action (CAPA) ensured
    c. Responsibility shall be assigned and action to be taken against the erring individual
    d. In case presence of manufacturer of the equipment involved is required, subcontractor will arrange the same

e. All expenses pertaining to the RCA / CAPA shall be borne by the subcontractor

6. RCA and CAPA reports of all near misses and minor injuries shall be identified and report submitted to BHEL within 7 days of occurrence.
7. For incidents, where worker does not resume duty within 48 hours of occurrence, Joint investigation along with BHEL shall be conducted within 7 days, and CAPA ensured.
8. Corrective action shall be immediately implemented at the work place. Work shall be put on hold in the area till corrective actions are verified by BHEL
9. All incidents, their Root Cause Analyses and Corrective actions shall be recorded, and analyzed so as to identify weak areas and actions to be taken to reduce the incident trend.

13. SAFETY DURING WORK EXECUTION

1□.1 HSE SYSTEMS AND PROCEDURES

BHEL Power Sector HSE Management System (HSEMS) shall be referred for controlling hazards, aspects, and carrying out HSE activities at site. Subcontractor shall get familiar with and follow the HSEMS documents provided by BHEL which include the follows:

1□.1.1 HSE PROCEDURES:

All HSE Procedures defined in HSEMS, as referred in various sub-clauses of this Section as given in Annexure 01

1□.1.2 PERMIT TO WORK (PTW) SYSTEM

1. The following activities shall be carried out by the subcontractor strictly after obtaining Permit to Work (PTW) from BHEL

   i. General Work Permit (**F□r□ □□N□. HSEP14-FP01)**
   ii. Height working (**F□r□ □□N□. HSEP14-FP02)**
   iii. Hot working (**F□r□ □□N□. HSEP14-FP0□)**
   iv. Confined space Work (**F□r□ □□N□. HSEP14-FP04)**
   v. Excavation more than 2-meter depth (**F□r□ □□N□. HSEP14-FP0□)**
   vi. Radiography / Radiation Work (**F□r□ □□N□. HSEP14-FP0□)**
   vii. Heavy / Complex / Critical Lifting Activity (**F□r□ □□N□. HSEP14-FP0□)**
   viii. Night / Holiday Work (**F□r□ □□N□. HSEP14-FP0□)**
   ix. Material Loading / Unloading Permit (**F□r□ □□N□. HSEP14-FP0□)**
   x. Grating / Safety Net / Safety Facility Removal Permit (**F□r□ □□N□. HSEP14-FP10)**
   xi. Live Electrical Maintenance etc. - Lockout / Tag (**F□r□ □□N□. HSEP14-FP0□)**

2. The above list is not exhaustive. BHEL reserves right to introduce additional Permits or modify requirements for usage of existing Permits. The conditions for using the Permit are specified in the Format (General Requirements).

3. Where customer is having separate Work Permit System the same shall be followed in conjunction to ensure all activities and checks are covered in all systems.

4. Permit applicant shall apply for work permit of particular work activity at particular location before starting of the work along with Job Hazard Analysis.

5. All Permit signatories shall physically visit the work area and check that all the safety control measures necessary for the activity are in place. Only then the permit shall be issued.
   a. Signatory shall physically visit the area of work and ensure all required safeguards before signing the Permit
   b. Signatory shall periodically visit the area to confirm the availability of required safeguards throughout the currency of the permit
   c. In case any Permit requirement is not available, work will be stopped till it is made available

6. Permit holder shall implement and maintain all control measures during the period of permit. The permit will be closed after completion of the work and submitted to BHEL.

13.1. Operational Control Procedures

1. All applicable OCPs (Operational Control Procedures) as identified from outcomes of HIRA, Aspect / Impact studies and BHEL inputs will be followed by subcontractor. This will be done as part of normal scope of work.
2. Illustrative list of such OCPs is given in Table 13.1 and same will be made available to subcontractor by BHEL during work execution at site.
3. In case any other OCPs are required or existing ones need to be modified in order to control the risks / impacts associated with any activity during the execution of work subcontractor shall prepare / update and follow the same with information to BHEL.

Table 13.1 - LIST of Reference OCPs

No.	Topic	No.	Topic	No.	Topic
0	General Safety	20	Oil flushing	40	Gas distribution test
1	Handling of chemicals	21	Alkali boil out	41	Cleaning of Hotwell / Deaerator
2	Electrical safety	22	Steam blowing	42	Electrical maintenance
3	Energy conservation	23	Working in confined area	43	O&M of control of AC plant & system
4	Welding and gas cutting operation	24	Operation of passenger lift, material hoists & cages	44	Material preservation
5	Fire safety	25	Vehicle/ Crane maintenance	45	Electro-resistance heating
6	Use of hand tools	26	Radiography	46	Blasting
7	First aid	27	Waste disposal	47	Transformer charging

8	Food safety at canteen	28	Handling & storage of mineral wool	48	Handling of battery system
9	Use of cranes	29	Working at night	49	DG set
10	Storage and handling of gas cylinders	30	Computer operation	50	Sanitary maintenance
11	Manual arc welding	31	Storage in open yard	51	Piling rig operation
12	Use of helmets	32	Drilling, reaming and grinding(machining)	52	Passivation
13	Good house keeping	33	Stress relieving	53	EDTA Cleaning
14	Safe excavation	34	Hydraulic test	54	Chemical cleaning of Pre boiler system
15	Working at height	35	Trial run of rotary equipment	55	Boiler Light up
16	Filling of hydrogen in cylinder	36	Batching	56	Rolling and Synchronization
17	Illumination	37	Cable laying/tray work	57	Loading of Unit
18	Handling and erection of heavy metals	38	Spray insulation	58	Air compressor
19	Acid cleaning	39	Compressor operation	59	Hydra Operation

1□.2 ACTI□ITY SPECIFIC REQUIREMENTS FOR SAFETY:

All Work shall be commenced only after taking the respective Work Permits (as applicable) and precautions as per relevant codes, systems and OCPs in order to ensure safe conditions throughout the duration of work. Additionally, activity specific safeguards as per this section shall be followed.

1□.2.1 WORK AT HEIGHT:

1. All work at height above 2 meter above ground level without complete platforms, handrails and other related fall protection shall require a work permit in the prescribed form. This shall require approval by the competent authority. The HSE officer of sub-contractors shall follow the checklist religiously by physically verifying the condition of the work area before recommending for approval.

2. Prior to the start of work at elevation, the HSE Officer involved with the work must meet the work supervisor to review the scope of work, and must review all the possible fall hazards and effective safety responses. The evaluation / analysis must be documented and kept on file and on site by the HSE Officer.

3. Whenever a fall hazard or other exposure exists for working at heights more than 2.0m/6ft, the nature and scope of work will be evaluated for conditions and environmental factors before selecting the appropriate fall protection system (active, passive or a combination of measures, as appropriate).

4. All Engineering and Administrative Controls including barricading, safe platform, Safety Nets etc. shall be made available at work location. Under no circumstances, there shall be total reliance on PPEs only

5. **S□□□□□ N□□□**

   a. Contractor shall maintain sufficient stock of Safety Nets for deployment
   b. Safety Nets as per IS: 11057:1984 should be used extensively for prevention / arrest men and materials falling from height.
   c. The safety nets shall be fire resistant, duly tested and shall be of ISI marked.
   d. Safety Nets shall be deployed below all platforms where height work is envisaged. Duration of work, delay shall be no excuses for non-installation of Safety Net

6. Reaching beyond barricaded area without lifeline support, moving with support of bracings, walking on beams without support, jumping from one level to another, throwing objects and taking shortcut must be discouraged.
7. Monkey Ladder shall be fitted with cages. Rope ladder should be discouraged.
8. In case of pipe-rack, persons should not walk on pipes and walk on platforms only.
9. In case of roof work, walking ladder/ platform should be provided along with lifeline and/ or fall arrestor.
10. For chimney or structure painting, both hanging platform and men should be anchored separately to a firm structure along with separate fall arrestor.
11. The procedures for the safety response to identified fall hazards developed and rescue plans must be reviewed with all individuals exposed to the hazards.
12. The HSE Officer must establish an inspection process of fall protection systems. Some equipment requires documented inspections by its manufacture on a regular schedule. Such equipment must have evidence of the inspection and re-certification process on it. This information must be reviewed before the equipment is actually used. Individuals must visually inspect the fall protection equipment before each use. Failure to complete this inspection process could result in serious injury or death.
13. Immediately remove from service any fall protection equipment that is identified as defective, damaged, or has been subjected to an impact. Damaged fall protective equipment must be destroyed to prevent re-use and not be discarded into trash containers, as the worn or damaged equipment could be unintentionally re-used.
14. Aerial lifting devices, excluding scissor lifts require the use of full body harnesses and lanyards in any elevated position.

1□.2.1.1 P□r□□□□□□□□□r□□□□□□ □□□□□ □ □□□□□□□d□:

□. S□□□□ H□r□□□

All height workers must use Safety harness with double lanyards. The primary lanyard is never unhooked until the secondary lanyard is secure. The design of the working platform should be such that u□d□r □□ □r□□□ □□□□□□□□ □r□r □□□□d □□□□ □□□□ □□□□rd□ □□□□□□□d □ □□□□ □□□□□□□.

□. L□□□rd

i. The type of work and the environment conditions determine lanyard and lifeline selection. If welding, chemical cleaning that may damage lanyards, connectors or lifelines, sandblasting, etc., either protect the components or use more appropriate type of system.
ii. Lanyards and lifelines must incorporate, or be used with, an appropriate deceleration (shock absorbing) device. Deceleration devices include rope grabs, rip-stitch lanyards, specially woven lanyards, tearing, or deforming lanyards, automatic self-retracting lifelines and lanyards which dissipate or limit the energy imposed on the employee during fall arrest.
iii. Once in use, the system's effectiveness is to be monitored. In some cases, a program for cleaning and maintaining the system may be necessary. Lanyard and lifelines must use locking snap hooks only and under no circumstances must two lanyard snap hooks be connected.

□. L□□□□□□

All lifelines in general are to be made of min 8mm dia steel rope (plastic coated) and tied to columns with 3 clamps at each end. Wherever columns are not available to tie the lifelines, the vertical posts as per the design below are to be provided after carrying out drop load test initially. A load of 240kg to be dropped off the mid-point of lifeline in this test.

d. L□□□□□□ P□□□

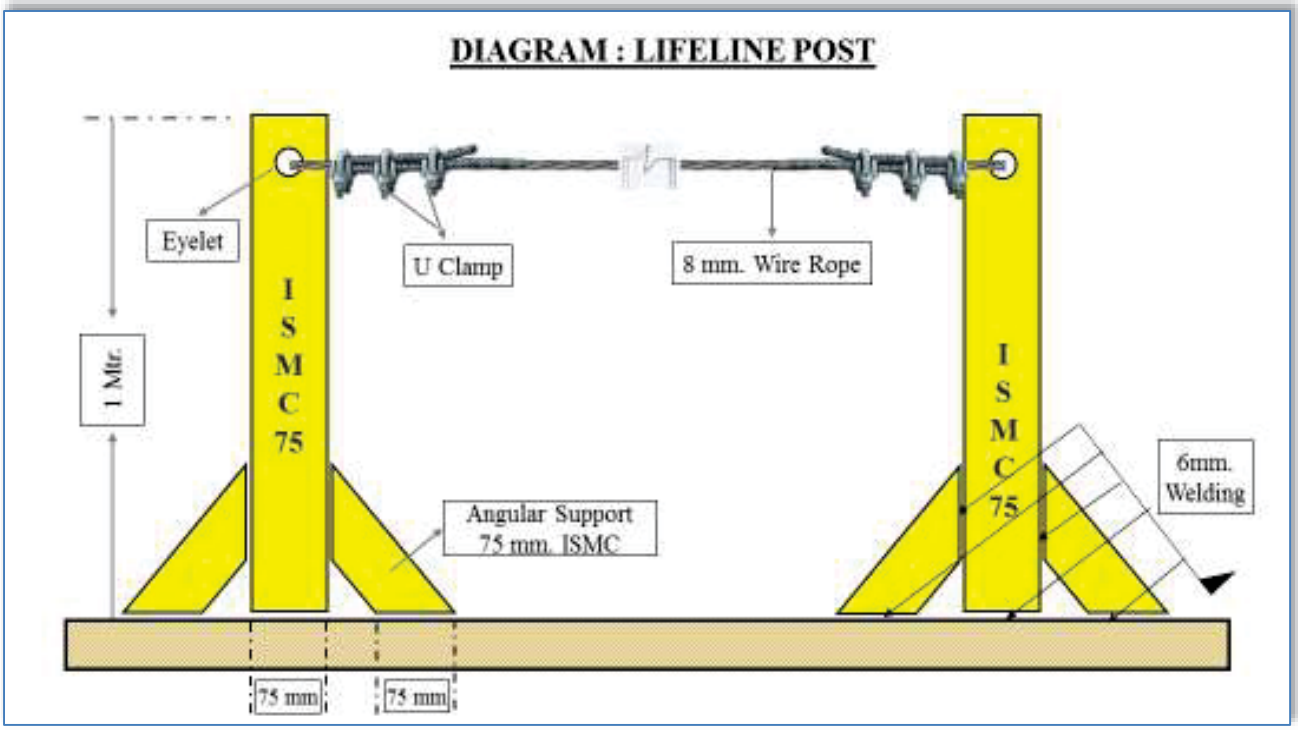

F□□. 1□.2.1.1 L□□□□□□ P□□□

i. The support at vertical post shall be fixed at end-to-end. The maximum length of one end to another end shall be 18 meters
ii. If the length of a lifeline is more than 18 meters, then intermediate vertical post(s) are to be used. Such intermediate post(s) will act as supports and the lifeline rope should simply pass through the eyelets (holes) of such supports without being anchored
iii. The lifeline need not be wrapped / clamped to any intermediate post
iv. Such intermediate posts must be used at an interval of every 18 meters
v. The post(s) in which the original lifeline is to be installed should be capable of sustaining a tensile stress of 2268 Kgs
vi. In a horizontal lifeline installation, maximum allowable sagging is 500-600 mm
vii. For a single spun lifeline, no more than 2 persons are allowed to work; for more than two workers, another lifeline should be installed
viii. Horizontal lifeline should be so installed that it does not impede safe movement of workers
ix. All the installation work must be carried out by competent person with adequate knowledge

1□.2.1.2 W□r□□□□ P□□□□r□

1. Working platforms, gangways and stairways shall be so constructed that they do not sag unduly or unequally and if the height of the platform gangways provided is more than 3.6 m above ground level or floor level, they shall be closely boarded and shall have adequate width, which shall not be less than 750 mm and be suitably fenced.

2. **Pr□□□□□□□□□ □□□□□□□□□ □□□□□□M□□r□□□□P□r□□□□ □□d C□□□□□□ □□Sr□□□r□□**

i. Every opening in the floor or a building or in a working platform shall be suitably barricaded to prevent the fall of persons by providing suitable fencing or railing whose minimum height shall be 90 cm.
ii. Adequate precautions should be taken such as the provision of fencing, or barriers to protect any person who might be injured by the fall of materials, or tools or equipment being raised or lowered. Cradle may be used for lifting materials - however this shall be made of MS angles and flats only and duly certified by the HSE officer. Operators may also use designed containers for lifting small tools.
iii. Guardrails (including scaffolding) erected over/adjacent working areas must have the guardrails screened (opening < 0.5), to prevent material from falling outside the platform/decking.
iv. Guardrails must be able to withstand a 200-pound force exerted in any one direction.
v. Where necessary to prevent danger, guys, stays or supports should be used or other effective precautions should be taken to prevent the collapse of structures or parts of structures that are being erected, maintained, repaired, dismantled or demolished.
vi. All openings through which workers are liable to fall should be kept effectively covered or fenced and indicated in the most appropriate manner.
vii. Guardrails and toe-board/barricades and sound platform conforming to IS: 4912-1978 and other Indian laws and regulations as depicted below should be provided.

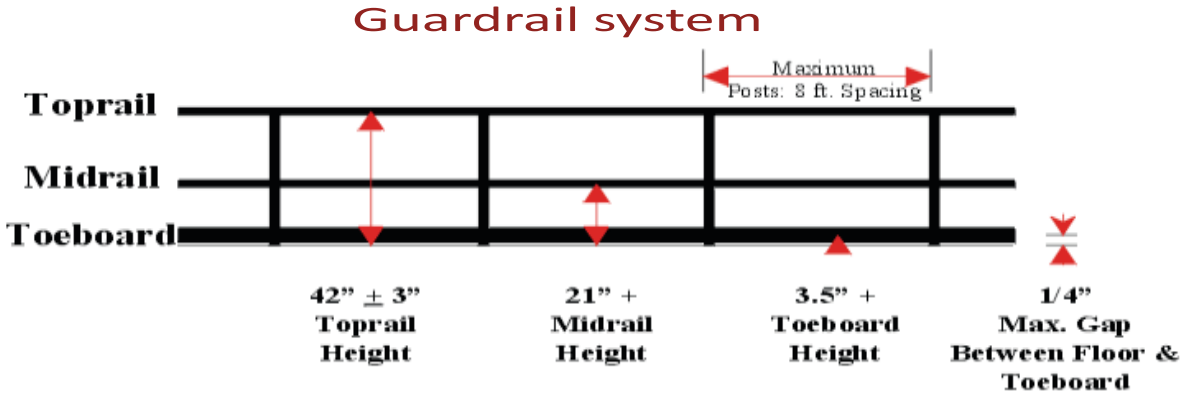

F□□. 1□.2.1.2 G□□rd R□□S□□□□

viii. Guardrails shall be provided to protect workers from falling from elevated work places. The rails are generally made of MS pipes of suitable dia. Rebar shall not be used for any handrails, ladder or cover purpose. Wherever the guard-rails and toe-boards cannot be provided:
   a. adequate safety nets or safety sheets shall be erected and maintained; or
   b. adequate safety harnesses shall be provided and used and / or
   c. adequate fall arrestor shall be provided and used.

   As mentioned under PPE clause, all these PPEs shall be defect free and regularly inspected for any defect. The full body safety harness shall have double lanyard only with max 1.8m length.
ix. The monkey ladders shall have sufficient fall arrestors. Adequate lifelines of 8mm steel wire

rope shall be provided across the work area.

x. The HSE officer shall recommend appropriate PPEs after analyzing hazards and risks involved.

1□.2.1.□ S□□□□d□□□

All scaffolds shall be conformant to the relevant standards including IS 3696 and IS 4014 as applicable. A sketch of the scaffolds proposed to be used shall be prepared and approval of the BHEL Engineer obtained prior to construction / use.

G□□□r□□

1. The scaffolding work must be carried out by a competent person, who shall train the scaffold users on safety aspects
2. All scaffolds shall be erected / dismantled by scaffolding crew under direct supervision of competent scaffolding supervisors.
3. All scaffolds shall be capable of supporting 4 times maximum intended load and erected on sound, rigid footing, capable of carrying the maximum intended load without settling or displacement. Bamboo scaffolding is not permitted for use on site.
4. Each employee on the scaffold shall use an approved safety harness attached to an independent lifeline. The lifeline is to be securely attached to substantial members of the structure (not the scaffold itself) or to securely rigged lines, which shall safely suspend a worker in event of a fall.
5. Guard rails and toe boards shall be installed on all open sides and ends of platforms more than (2) meters above ground or floor
6. Scaffold planks must be at least 5 cm x 25 cm (2” x 10”) full thickness lumber scaffold grade or better.
7. Scaffold planks shall not span distances greater than 2.5 meters (8 feet).
8. Scaffold planks shall extend over end supports not less than 6 inches nor more than 12 inches and be secured to the scaffold. Scaffolding and accessories with defective parts shall be immediately repaired or replaced.
9. All scaffolding must be a minimum of two planks wide. No one may work from a single plank.
10. Scaffold planks must be inspected before use. Planks that have been damaged must be removed from the site.
11. Access ladders must be provided for each scaffold. Climbing the end frames is prohibited unless the design incorporates an approved ladder.
12. Adequate mudsills or other rigid footing capable of withstanding the maximum intended load must be provided.
13. Scaffolds more the 6 meters (20 feet) in height must be tied to the building or structure at intervals which do not exceed 4 meters (13 feet) vertically and 6 meters (20 feet) horizontally.
14. Do not overload scaffolds. Material should be brought up as needed. Scaffolding must not be loaded in excess of its rated capacity.
15. Barrels, boxes, kegs, blocks or similar unstable object must never be used as work platforms or to support scaffold.
16. Where persons must work under or pass under a scaffold then a 18 gauge wire mesh screen must be installed between the toe board and guard rail.
17. Employees exposed to overhead hazards while working on a scaffold will be protected by 5 cm (2”) thick planks.
18. Wooden/bamboo ladders shall not be allowed at any cost. Ladder’s rungs shall be fitted /welded properly. Before every use the rungs should be checked for safe use.

19. Wooden scaffolds shall not be used in areas where fire / fire products are expected
20. Ropes made of jute / Plastic and other fire prone material shall not be used to tie up scaffolding components together
21. The platform should have permanent hand rail and mid rail with Toe board without fail.
22. All platforms are to be tightly planked for the full width of the scaffold, except as may be necessary for entrance openings. Platforms shall be secured in place.
23. On suspension scaffolds designed for a working load of 500 pounds, no more than two workers are permitted to work on the scaffold simultaneously. On suspension scaffolds with a working load of 750 pounds, no more than three workers are permitted on the scaffold simultaneously.

24. R□□□r□□ □□□□ □r d□□r□□□□□□□ □□S□□□□d□:

A. S□□□□d□d S□□□□d

i. Suspended scaffolds are platforms suspended by ropes, or other non-rigid means, from an overhead structure.
ii. Requirements for use are to be preapproved by HSE Head, under a specific Permit to Work.

B. R□□□□ S□□□□d□

i. The height of rolling scaffolds shall not exceed three times the minimum base dimension.
ii. The minimum base dimension of rolling scaffold will be 1.25 meters (4 feet).
iii. Adequate help must be provided when moving a rolling scaffold.
iv. Secure or remove all loose materials, equipment and tools before moving a rolling scaffold.
v. No one is permitted to ride a rolling scaffold when it is being moved. Castor brakes must be locked-on when the scaffold is not being moved.

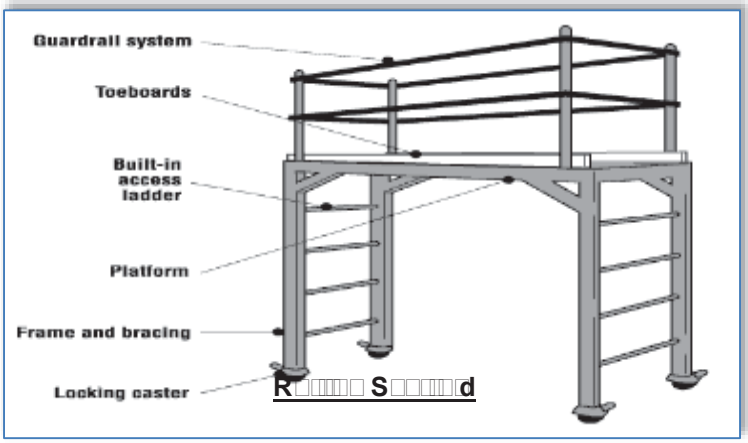

R□□□□ S□□□□d

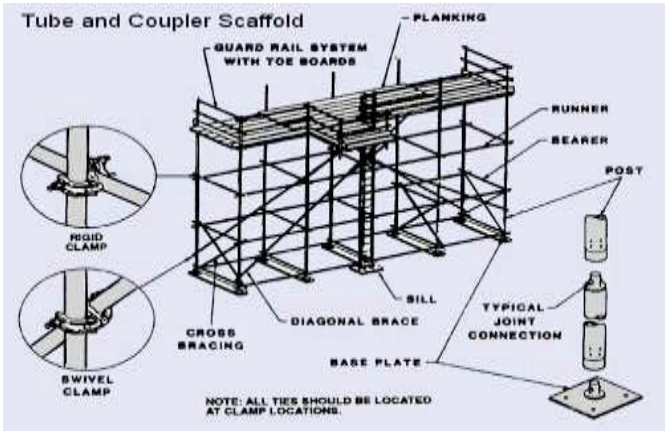

F□□. 1□.2.1.□ T□□□□ □□S□□□□d□

2□. S□□□□d T□□□□□

Scaffolds being erected, modified or dismantled must be tagged as suitable for use. The scaffolds can only be accessed by those involved with the process.

GREEN scaffold tag- shall be fixed when scaffold is complete and safe for use, signed and dated by

the scaffolding competent person daily.

RED scaffold tag – to be fixed if scaffold is in some way defective and cannot be used or is still under erection.

Examples of scaffold tags:

Fig. 1.2.1.4 Scaffold Tags

1.2.1.4 Ladder Safety

A sketch of the ladders proposed to be used shall be prepared and approval of the BHEL Engineer obtained prior to construction / use

Safe Use of Ladder:

1. Fall protection is required when working on a ladder above 2 meters and when climbing above nearby guardrails.
2. Ladders must be inspected prior to use and by a competent person quarterly, with documentation.
3. Use portable ladders for height up to 4 M only
4. Provide fixed ladders for height above 4 M
5. Place the ladder at an angle of 75 degrees (approx.) from the horizontal (1:4)
6. Extend ladder at least 1 M above the top landing
7. Secure top and bottom of the ladder firmly to prevent displacement- anti skid lining at the bottom
8. Ensure that the width of the ladder is not less than 300 mm and distance between rungs is not more than 300 mm
9. Provide landings of minimum size 600 x 600 mm at intervals not more than 6 M for fixed ladders. Check the ladders daily for any defects
10. Ensure that the areas around base and top of the ladder are clear. Getting on and off the ladder is more hazardous than using it. Use a mudsill if the ladder is to rest on soft, lose or rough soil
11. Do not use ladders of conducting material near power lines, and only use ladders near power line or other energize system with exposed parts if they are confirmed locked-out and de-

energized.

12. Stand no higher than the fourth rung from the top for carrying out any job standing on a ladder.
13. Never reach out from a ladder to perform work where your belt buckle protrudes past the ladder rung.
14. Always face the ladder while climbing up or down
15. Maintain three-point contact while climbing up or down a ladder i.e. two hands and one foot or two feet and one hand on the ladder at all the times.
16. Avoid climbing up or down a ladder while carrying anything in hands. Lift tools, equipment and materials with a rope.
17. Work from portable and extension ladders near guardrail where fall expose exists over the guardrail regardless of height, and above 2.0 mtr. heights from the working/walking surface will require the use of personal fall arrest equipment

1□.2.2 E□CA□ATION □ CI□IL WORKS

All safety precautions shall be taken for foundation and other excavation marks as per IS-3764.

1□.2.2.1 E□□□□□□□□□

The following safety measures are to be ensured before and during excavation:

1. All Excavation activities more than with depth of 1.22 meter or more shall require and Excavation Work Permit
2. Check for underground utilities like electrical / telephone cables, sewage, water lines and proper care has to be exercised to protect and prevent damage to it
3. Proper and adequate slope is maintained while excavating
4. Adequate shoring or sheeting is done wherever require to prevent soil sliding
5. Safe access through ladder or steps for exit & entry to excavation
6. No material /excavated soil is kept within one meter from the edge
7. Safe way is planned and provided for movement of HEM /transport equipment near excavation
8. Safety helmet and shoes/gum boots are provided and worn by the workmen at excavation works
9. Dewatering arrangement is made where water seepage is prevailed.
10. Stop blocks are provided to avoid vehicles reversing into the excavated trenches
11. Danger signs /Caution boards are displayed at work spot
12. Barricading is provided at excavated pits

Soil Type	Height/Depth ratio	Slope Angle
Stable Rock	Vertical	90 deg.
Type A	¾ : 1	53 deg.
Type B	1 : 1	45 deg.
Type C	1½ : 1	34 deg.

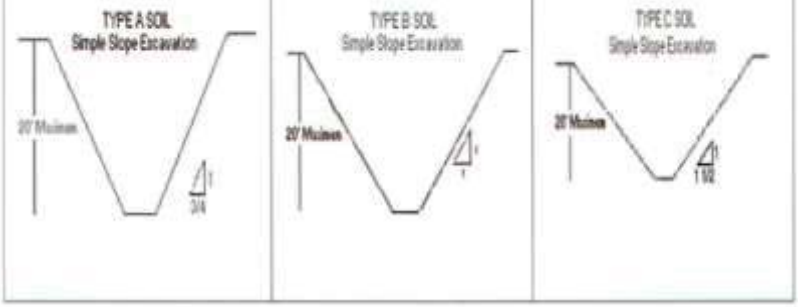

Determining Soil Type

Type	Description	Examples
A	Cohesive soils with an unconfined compressive strength of 1.5 tons per square foot or greater.	Clay, silty clay, sandy clay, clay loam and in some cases: silty clay loam and sandy clay loam.
B	Cohesive soils with unconfined compressive strength greater than 0.5 tsf but less than 1.5 tsf.	Angular gravel (similar to crushed rock), silt, silt loam, sandy loam and, in some cases silty clay loam and sandy clay loam.
C	Cohesive soils with unconfined compressive strength greater than 0.5 tsf or less.	Granular soils such as gravel, sand and loamy sand; submerged soil or soil from which water is freely seeping; submerged rock that is not stable.

F□□. 1□.2.2.1 E□□□□□□□□□ R□□r□□□□

1□.2.2.2 P□□□□

Ensure the following precautionary measures before starting piling works:

1. Inspection of piling equipment by responsible person for its condition before initiating piling operation.
2. Checklist and OCP for piling to be prepared using manufacturer's instructions and used
3. Testing and its certification wire ropes, slings, D-shackles, chain pulley blocks using in the process of piling work by competent person
4. Adequate support and secured foundation of the piling equipment to avoid toppling
5. Hoses should be lashed and adequately secured
6. Proper work platform is to be provided on piling frame
7. Safe work procedures and close supervision to prevent unsafe acts of operators/any unsafe conditions that may arise
8. Only experienced and trained operators are engaged for the piling operation
9. Provision of Personal Protective Equipment (PPE) like safety shoes/gumshoes/safety helmet/safety belt etc. and its use by their workmen.
10. Special care and precautions If work is near electrical live cables/ electrical equipment
11. Cordoning of work area to prevent un authorized entry
12. Guarding of revolving parts
13. Specific measures to prevent over turning of pile driver/missing of hammer/ hammer movement out of range

1□.2.2.□ B□□□□□□□

F□□□□□ □□□ S□□□□□ □□□□d□r□□□□□ □□r □□□□□□□ □□□□□r□ □□ □□ □□□□r□d:

1. Modern type batching plant should be used in which all the moving parts are protected and

emergency and safety features are incorporated.

2. Installation of external Electric moto-vibrators in the feeding hopper of all batching plants to reduce human intervention.
3. Installation of safety devices like pull-chord on both the sides of conveyor for stopping the conveyor in emergency
4. Workers carrying cement / sand to be given appropriate PPEs like respiratory masks & gloves.
5. Conveyor belt/rotating parts must be guarded properly.
6. Safety awareness shall be inculcated in workmen about the risk involved in rotating parts.
7. The agency shall ensure to erect the batching plant as per drawing including installation of all safety devices as provided by manufacturer and witnessed by BHEL Engineer in charge before starting of machine in future.
8. Safety audit to also focus on Batching plant.
9. The site shall impose penalty on the agency who has violated the safety norms as per contract.

1□.2.2.4 M□□□□□ P□□□□

Mobile plant includes tractors, trailers, dumpers, excavators, bulldozers, road rollers etc. for earthmoving purpose and concrete mixers, concrete transit mixtures, concrete pumps etc for concreting purpose. Due to the very nature of their function and movement in difficult terrains, congested areas, working in tandem with manual work and other operations the danger is inherent. Reverse horn is compulsory for all earth moving machineries.

F□□□□ □□□ S□□□□□ □ □□□□r□□ □□ □□ □□□□r□d □□r M□□□□□ P□□□:

1. Where movement around site is involved, routes should be planned, obstruction free and well maintained
2. Observe specified speed limits
3. Operating personnel should be aware of associated risks and its preventive measures
4. Only experienced, trained and authorized persons with valid license (wherever applicable) should operate the mobile equipment/vehicles
5. Provide and use Warning lights and reverse horn for cautioning the people around
6. Operation should be on level and stable ground with adequate working clearance.
7. Loading of out riggers/stabilizers should be well within safe ground bearing capacity
8. No person should be on equipment or vehicle during loading and unloading of material
9. Operators should be protected by warning barriers or switching off power when working in close proximity of overhead power lines
10. The equipment /vehicles should be well maintained and provided with effective brake system and other safety devices (wherever require)
11. Rotating parts of equipment should be adequately guarded
12. Provide necessary personal protective appliances and ensure its use by the operating personnel Ensure effective measures at source to control harmful emissions, dust, fumes contaminating atmosphere and cause health hazards to the operators and people in the vicinity.
13. No overloading/over stressing of vehicles/plant is allowed
14. Hoses, pipes, receivers, gauges and valves involved in carrying out hydraulic fluid/ compressed air should be checked for leaks and tested prior to operation.
15. Adequate safe clearance for swing and movement is to be judged during operation of Concrete mixer

16. Setting of machine on firm and level ground with wheel locked to prevent movement of machine
17. Proper instructions and Special precautions are to be ensured to prevent entry in to the danger zone of projectile of bucket while dropping bucket
18. Operator leaving work spot should ensure that the equipment/vehicle is kept in neutral position and place on firm and level ground.
19. The hand brake should be kept in position and block road wheels as additional safety measure
20. Blades/buckets should be kept low while moving
21. The dozer blades should not be used as brakes except in emergency
22. The ground should be examined for its bearing capacity and general safety especially when operating road roller at the edges of slopes, embankments.
23. The roller should not be moved downhill with the engine out of gear
24. If operating near excavations the following precautionary measures are to be ensured
25. Barricading, edge protection to prevent fall of persons/vehicles over running while reversing etc.
26. Suitable support system and adequate allowance to avoid the danger of side collapsing
27. Experienced signaler /attendant should be always accompanied with operator/driver for proper direction /signal and also to caution others in the working Zone during operation of mobile plant

1□.2.2.□ C□□□r□□□ □□r□□□r□

1. Revolving parts/belt drives should be adequately guarded and Vibrating unit shall be completely enclosed and have suitable overload relays and effectively earthed
2. Ensure sufficient length of cable to the Vibrator.
3. Ensure electric starters and other accessories are firmly fixed adequately supported
4. Ensure locking of needle load while inserting needle in to the vibrator,
5. Ensure periodical lubrication and maintenance

1□.2.2.□ C□□□r□□□ M□□□r□

1. Setting of machine on firm and level ground with wheel locked to prevent movement of machine
2. Proper instructions and Special precautions are to be ensured to prevent entry in to the danger zone of projectile of bucket while dropping bucket

1□.2.□ WELDING □ GAS CUTTING SAFETY (HOT WORK)

1. All Hot Work shall require a Hot Work Permit
2. There shall be flash-back arrestors conforming to IS-11006 at both cylinder and burner ends. Damaged tube and regulators must be immediately replaced.
3. All safety precautions shall be taken for welding and cutting operations as per IS-818.
4. When possible, items to be welded, cut, heated, etc. shall be moved to a safe location free of combustible or flammable material. If this is not possible, then all combustibles/ flammables that can be removed from the area shall be removed within a 35-foot circumference and a positive means of confining arcs and sparks generated by the process shall be ensured and additional person(s) shall be stationed as fire-watch for the area(s)still exposed, along with obtaining the Hot Work Permit as applicable.
5. Appropriate fire-fighting equipment is to be available in close proximity of any welding and gas cutting operations at all times suitable for the type of Fire.
6. Drums, tanks, and similar containers that have contained flammable or toxic material shall not be welded, cut, or heated until they have been made safe by water filling, thorough cleansing or similar accepted practices. The container shall also be ventilated during the welding, cutting, or heating process.

7. Proper ventilation is required for any welding or torch operations performed in a confined space.
8. Any welding or gas cutting operations performed on metals of toxic compounds or coating such as zinc, stainless steel, lead, cadmium, chromium, and beryllium shall be properly ventilated and/or proper respiratory protection shall be worn by any person that could be exposed to fumes, vapors, and gasses created by the welding and gas cutting processes.
9. Wherever it is practical, all arc welding operations shall be shielded to prevent direct light rays or sparks from contacting persons in the vicinity or from reaching areas normally used to travel through or into the vicinity. Where this is not practical, persons who shall be in the area are to use proper eye and skin protection. Other persons who are not participating in the welding or gas cutting operations are not to be allowed into the hazard zone.
10. Welders and other employees who are exposed to arc welding radiation shall wear suitable clothing and protective apparel to prevent burns and other types of ultraviolet radiation damage to the skin.
11. Arc welding machines shall be shut down when being moved or when they are not in continuous use. Electrode holders left unattended shall have electrodes removed and shall not be left where they might contact employees or conducting objects.
12. Arc welding power supply cable shall be of proper rating and material, e.g. copper.
13. Welders shall guard against allowing materials adjacent to or behind them to reflect radiation back toward them or towards others in the area. Reflected radiation can cause skin burns and eye flash burns.
14. Valve caps shall be in place when cylinders are not in use. Valve caps shall never be used for lifting the cylinder vertically.
15. Torches shall only be lit by approved strikers; never with matches, cigarette lighters, or hot-work.
16. **S□□□□r □S□□ C□□□□r**

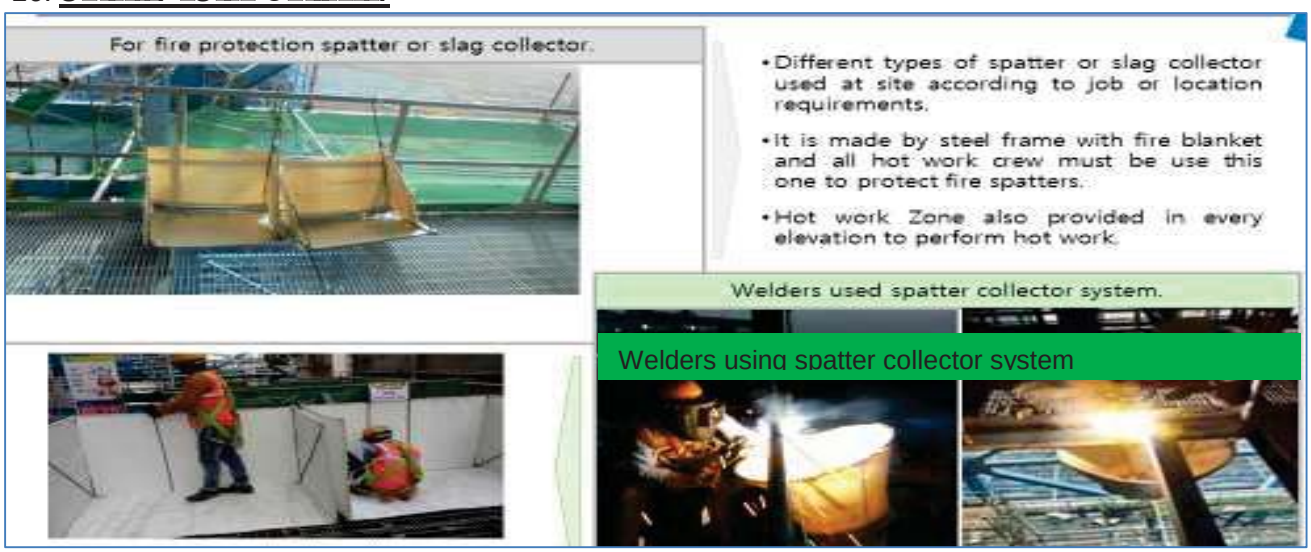

F□. 1□.2.□.1 S□□□□r □S□□ C□□□□r

While carrying out job at height, the sparks or molten slag shall be prevented from falling down by putting a fire-resistant (non-asbestos) sheet or patter/ slag collector or even MS Sheet. The passage of falling sparks or molten slag shall be barricaded till ground floor and any cable/ tubes/ any other objects interfering in the passages hall either be removed or covered with Fire-resistant sheet or MS Sheet.

1□.2.□.1 COMPRESSED GAS

1. All cylinder valves shall be closed when any work is finished and when any Cylinders are empty or being moved. Valve protection caps shall be placed and secured properly before gas cylinders are transported, moved or stored.
1. Compressed gas cylinders shall be secured in an upright position with chain or appropriate means during storage & use. However, a trolley shall be used for transportation.
2. Compressed gas cylinders shall always be secured from tipping or falling, whether in use, in storage or in transit. The cylinders shall always be secured upright, except during times when actually being hoisted or carried.
3. When cylinders are transported by powered vehicle they shall be secured in a vertical position.
4. Regulators shall be removed when cylinders are not in use or are in transit, unless the cylinder is firmly secured on a special carrier designed for this purpose.
5. Gas cylinders are not allowed to be used in man-basket when occupied.
6. Cylinders containing oxygen or fuel gasses shall not be taken into confined spaces.
7. Oxygen cylinders shall be stored a minimum of 6 meters from fuel gas cylinders or shall have an approved firewall between them.
2. All cylinders shall be kept at a safe distance from welding or cutting operations or shielded from arc/ sparks / slag.
3. All cylinders shall be placed where they cannot become part of the electrical circuit.
4. Oxygen and acetylene shall not be stored together. Oxygen must be separated from acetylene (or ANY fuel gas) or combustible material by at least 20ft or a barrier with a 30 minute fire resistance rating.
5. All Cylinders should be stored upright in a designated area with labels for the type of gas. All applicable precautions to be ensured during storage
6. Oxygen and fuel gas regulators, hoses and associated equipment shall not be altered and shall be in proper working order while in use.
7. Compressed air can be extremely dangerous if allowed to penetrate the skin. As such, the use of compressed air to clean off yourself or other workers shall be strictly prohibited.
8. All gas cylinders shall be stored in upright position. Suitable trolley shall be used for cylinder movement, the design of which shall be submitted to BHEL Engineer for approval.
9. No of cylinders shall not exceed the specified quantity as per OCP
10. Cylinders shall be moved by tilting and rolling them on their bottom edges. They shall not be intentionally dragged, struck or permitted to strike each other violently.
11. All cylinder should be kept only in cylinder trolley.
12. Cylinder shall be transported in upright vertical position by suitable mean.

1□.2.4 LIFTING □ RIGGING SAFETY

1. All Heavy / Complex Lifting operations as defined in Clause 6.12 shall require a Lifting Work Permit.
2. All the cranes and lifting tools & tackles shall be inspected on daily / weekly basis as well as

monthly by expert as per applicable formats.

3. In addition, inspection / certification as mandated by law shall be carried out wherein these shall be tested and certificates of fitness shall be obtained from 3rd party State Govt. approved competent agency before deploying at site and later periodically. BHEL shall be given advance intimation of any such inspections
4. The last date of Third Party Inspection and the next Due date shall be conspicuously displayed on all cranes. A copy of certificate shall be pasted on operator's cabin of all the lifting equipment.
5. Following requirements shall be mandatorily followed, wherever applicable:
   a. The manufacturer's instruction for maintenance shall also be followed. All safety measures shall be followed.
   b. All tools tackles, lifting appliances; material-handling equipment etc. used by the subcontractor shall be of safe design and construction.
   c. The operators, slingers and signalers shall be qualified as per IS 13367 (part-1):2003 "Safe use of cranes- code of practices".
   d. There shall be a person responsible for co-ordination among cranes where multiple cranes are used, and lifting over 75% of the crane capacity to be avoided.
   e. Mobile phone should be banned for crane operator and lifting operation. Only walki talki shall be allowed in rigging/Lifting purpose.

1□.2.4.1 P□r□□□□□L□□□ (M□□-B□□□□□□□□□□□):

The design of personnel man basket shall be submitted to BHEL Engineer for approval before use. Relevant permit (Height work & others as applicable) shall be completed prior to lifting any people, along with a rigging plan.

a. A separate Lifeline / Fall arrestor anchored to a fixed structure outside of Jhoola shall be provided for the workers inside the basket. All occupants of the basket shall have Safety Harnesses equipped with rope grabs, which are to be hooked to the vertical lifeline.
b. Man-basket shall be used where access through ladders or scaffolding is not feasible.
c. Man-baskets shall be designed and engineered by a manufacturer (job made man-baskets are not allowed, unless designed and tested by a certified engineer), and built robust with MS Angles and flats or plates or channels only.
d. Guard rails top and mid, must be in place and screened-in to avoid material from falling out of basket. The factor of safety shall be 200%.
e. It shall have a door with double latches and shall open inside. Anchor points shall be identified within the man-basket.
f. The man-basket shall be thoroughly inspected and load tested and a trial run performed without personnel before being put to job.
g. It shall be treated as a lifting tool (T&P Item) and shall undergo same certification cycle and inspection as other lifting equipment.
h. An additional sling of required lifting capacity shall be fixed the man-basket main lifting point and attached to the crane above the ball or block.

i. While lifting man-basket, the crane shall maintain a uniform speed of lift without any swing.
j. Once man-basket reaches the destination, the lift brakes shall be locked as long as the basket remains at that point. The same care shall be taken in its descent.
k. As for hanging man-basket, the same shall be hung off a rigid structure with help U-shaped handle welded to man-basket. This shall be tested once in a year by a competent person.
l. Use of Rebar steel for making and monkey-ladder must be avoided.

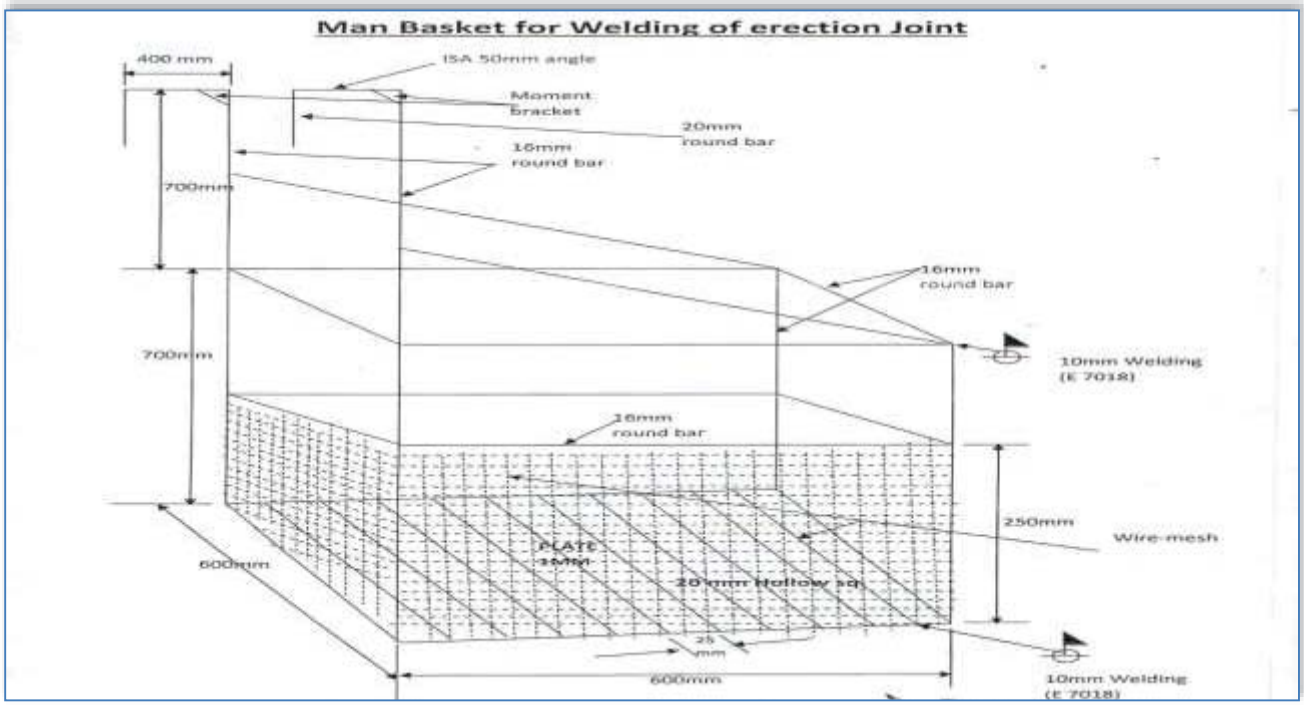

Fig. 13.2.4.1 Man Basket for Welding of erection Joint

13.2.4.2 **Crane & Heavy Equipment:**

This section provides the guidelines to ensure proper rigging and lifting activities are accomplished safely and in accordance with applicable specifications, codes, and regulations.

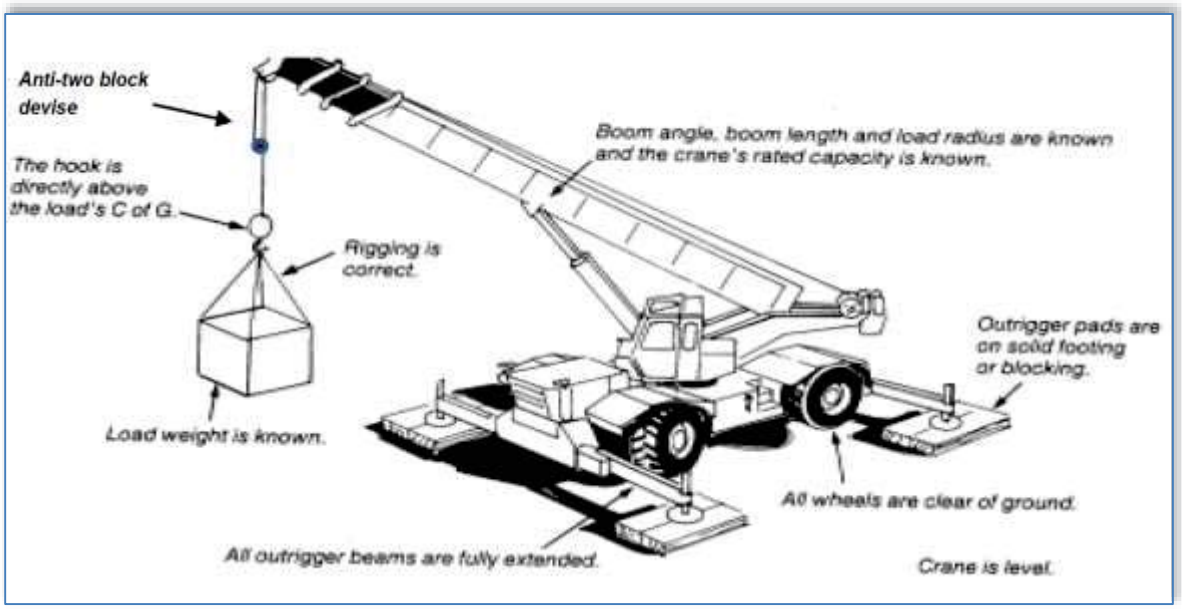

F□□. 1□.2.4.2 Pr□□□r Cr□□□ S□□□□

a. On every crane or piece of hoisting equipment notices of all rated load capacities, recommended operating speeds, and any hazard warnings or special instructions shall be conspicuously posted. All instructions and warning shall be visible from the equipment operator 's station.
b. Cranes shall have an Anti-Two-block safety device installed
c. All mobile cranes shall have overload and backup alarms, load angle indicators and limit switches
d. All areas within swing radius of cranes that are potentially accessible by pedestrian, vehicular, or equipment movement shall be barricaded to prevent anyone or any vehicle or equipment from being struck by the crane or hoisting equipment, or its load(s).
e. No part of the lifting equipment or its load shall be within the distance as specified in the Indian Electricity Act from an energized power line
f. Cranes shall have annual certified third party inspection and be inspected before use by the operator. Any defects shall be corrected before use. Logs of crane inspection shall be kept with the crane.
g. Make certain that the rigging personnel, material, and equipment have the necessary capabilities for the job and are in safe condition.
h. Communicate with person(s) directly responsible for accomplishing the work and / or work area to establish requirements/responsibilities and make certain that all preparatory work is complete.
i. Mats/Pads must be used on all lifting equipment, equipped with out riggers.
j. Pick and carry must have the load secured to the rig in front.
k. Only BHEL Approved Plate Lifting Spreader Beam configuration shall be used (Sample in Fig. 13.2.4.2)

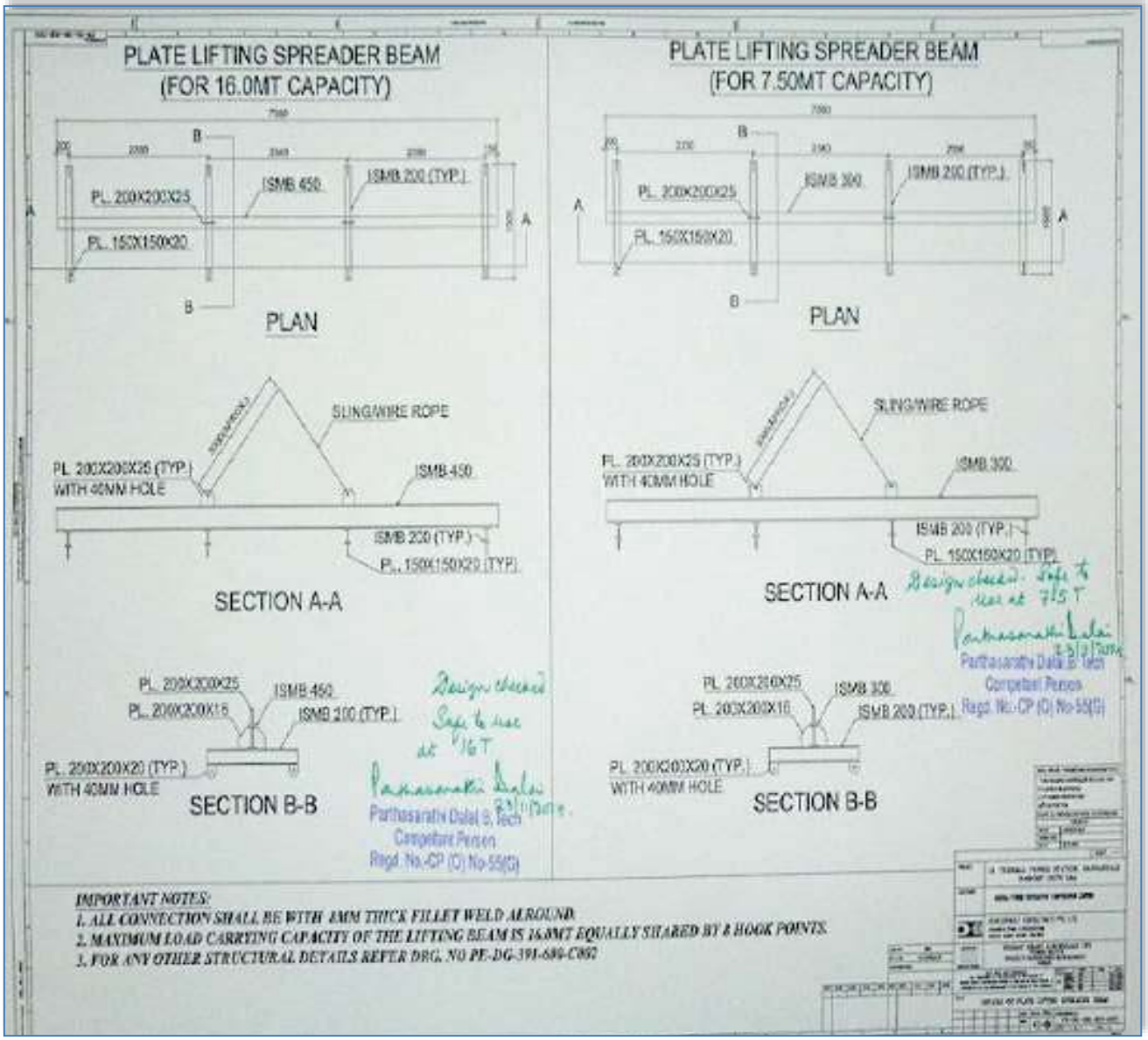

F□□. 1□.2.4.□T□□□□□□P□□□□ L□□□□□ S□r□□d□r B□□□ C□□□□□□r□□□□ □□r □.□MT □□d 1□MT L□□d□

□ **Cr□□□ □□□r□□□r□ □ □□□□□□□□□ □□□ □□□□□ □□□:**

1. Pass an annual Operator's Physical examination
2. Carry a valid training certification card at all time while operating issued by the Govt. or other recognized institute.

1□.2.4.□ SAFE RIGGING PRACTICES

13.2.4.4

a. Review the planned operation and requirements with the operator and rigging crew.
b. Ensure a pre-lift meeting is conducted with crane operator, tagline operator, signal personnel, and Safety Manager.
c. Designate a qualified person from the rigging crew to observe clearance of the equipment and give timely warning for all operations where it is difficult for the operator to maintain the desire clearance by visual means.
d. Clear the lift area of all unnecessary personnel.
e. Hydras shall only be allowed for loading & unloading works & shall not be allowed to move with load

1□.2.4.4.1 RULES FOR SAFE RIGGING

1. Use loops, thimbles and corner pads to prevent damage to slings when used around corners or on cutting edges.
2. Never allow wire rope to lie on the ground for any length of time or on rusty steel or near solvents, chemicals or corrosive substances.
3. Slings must not be pulled from between or under loads with load resting on the sling.
4. Keep all rope away from flame cutting or welding operations.
5. Never use rope as sling material.
6. Never wrap a wire rope completely around a hook.
7. Do not bend wire rope near any attached fitting.
8. The sling must be selected to suite the most heavily loaded leg rather than the total weight when using multi-legged sling to lift loads in which one end is heavier than the other.
9. When using 3 and 4 legged sling configurations, any two legs must be capable of supporting the entire load.
10. Where possible, wire rope choker hitches must include a shackle with the eye around the shackle pin to prevent breaking wires of the choke. The choker hitch must be “snugged down” prior to lifting, not after tension is applied.
11. Unless authorized by the hook manufacturer when more than two rope eyes are placed over a hook, install a shackle, pin resting in the hook, and place the rope eyes in the bowl of the shackle.
12. Properly rig all loads to prevent dislodgment of any part.
13. Use guide ropes or tag lines to prevent the rotation or uncontrolled motion of the load when necessary.
14. Loads must be safely landed and properly blocked before being unhooked and unslung. Tag lines must not be used in situations that jeopardize the safety of the lift.
15. Lifting beams must be plainly marked with their weight and designed working load and must only be used in the manner for which they were designed.

16. The hoist rope or chain must never be wrapped around the load. The load must be attached to the hook by slings or other rigging devices that are adequate for the load being lifted.
17. Multiple part lines must not be twisted around each other.
18. The hook must be brought over the center of gravity of load before the lift is started.
19. If there has been a slack rope condition, determine that the rope is properly seated on the drum and in the sheaves prior to lifting.
20. Keep hands away from pinch points as the slack is being taken up.
21. Leather gloves are recommended when handling wire rope.
22. Avoid impact loading caused by sudden jerking when lifting or lowering. Lift the load gradually until the slack is eliminated.
23. Never ride on a load that is suspended.
24. Avoid allowing the load to be carried over the heads of any personnel.
25. Never work under a suspended load until the load has been adequately supported from the floor and all conditions have been approved by the supervisor in charge of the operation.
26. Never leave a load suspended unless emergency evacuation is required.
27. Never make temporary repairs to sling.
28. The capacity of a sling is determined by its angle, construction, type of hitch and size.
29. Never lift loads with one leg of a multi-leg sling until the unused legs are made secure.
30. Never point load a hook unless it is especially designed and rated for such use.
31. Make certain that the load is broken free before lifting and that all legs are taking the load.
32. When using two or more slings on a load make certain all slings are made from the same materials.
33. Lower the loads on to adequate blocking to prevent damage to the slings.
34. Materials and equipment being hoisted must be loaded and secured to prevent any movement which could create a hazard in transit.
35. The weight of the hook, load block and any material handling devices must be included when determining crane capacity.
36. Calculated weights cannot exceed 75% of the chart without written approval.
37. Personnel must be completely clear of loads being picked up or set down by crane. Tag lines will be used to control the loads. Loads must not be touched by hand while placing/ moving.

1□.2.4.4.2 SLINGS

□. S□□□□□□□ S□□□□

The following are rules for safe use of synthetic slings:

i. Synthetic slings must be marked to show the rated capacity for each type of hitch and type of web material.
ii. Nylon web slings must not be used where fumes, vapors, sprays or mists or liquids of acids or phenolic are present. Web slings with aluminum fittings must apply in this category.

□□. S□□□□□□□ □ □□ □□□□□ □ □□□ □□ r□□ □□□d r□□ □□r□□□□ □□d d□□r□□□d □□ □□□ □□ □□□ □□□□□ □□□ □□□d□□□□ □r □r□□□□:

a. Acid or caustic burns
b. Melting or charring of any part of the sling surface
c. Snags, punctures, tears or cuts
d. Broken stitches
e. Distortion of fittings
f. Synthetic web slings of polyester or nylon must not be used at or come in contact with temperatures in excess of 82°C
g. Polypropylene web slings must not be used at or come in contact with temperatures in excess of 93°C
h. Insulated hooks must be tested yearly to insure insulation integrity to at least manufacturer's specifications.

[illegible]. Wire Rope Slings [illegible] removed from service when [illegible] conditions [illegible] exist:

a. In (10) randomly distributed wires broken in one (1) rope lay, or five (5) broken wires in one (1) strand in one (1) rope lay.
b. Wear or scraping of one-third the original diameter of outside wires.
c. Kinking, crushing, bird caging or any other damage resulting in distortion of the wire rope structure such as:
d. Evidence of heat damage.
e. End attachments that are cracked, deformed worn.
f. Corrosion of the rope or end attachments.

[illegible]. Metal [illegible] [illegible] [illegible] [illegible] removed from service when [illegible] conditions [illegible] exist:

a. A broken weld or broken brazed joint along the sling edge.
b. Reduction in wire diameter of 25 percent due to abrasion or 15 percent due to corrosion.
c. Lack of flexibility due to distortion or corrosion.

[illegible]. Synthetic [illegible] [illegible] [illegible] removed from service when [illegible] conditions [illegible] exist:

a. Acid or caustic burns
b. Melting or charring of any part of the sling service
c. Snags, punctures, tears or cuts
d. Broken stitches
e. Distortion of fittings

[illegible]. Rigging [illegible] [illegible] Plate Clamps [illegible]:

1. The rated load of the plate clamp must be marked on the main structure.
2. Care must be taken to make certain the load is correctly distributed for the plate clamp being used.
3. Do not allow load or plate clamp to come into contact with any obstruction.
4. The plate clamp must not be used for side pulls or sliding the load.
5. When lifting stainless steel or special alloys, ensure plate clamp is designed for use on

the specific metal.

1□.2.4.4.□ SIGNALING PRACTICES:

- The "slinger" is responsible for attaching and detaching the load to and from the crane. He shall:
  - have received appropriate training on general safe lifting operations;
  - be capable of selectings lifting gears suitable for the loads;
  - liaise with the operator and direct the movement of the crane safely.
- The "signaller" is responsible for relaying the signal from the slinger to the crane operator. He shall:
  - have received appropriate training on general safe lifting operations;
  - be able to direct the movement of the crane and loads.

Suggested hand signals

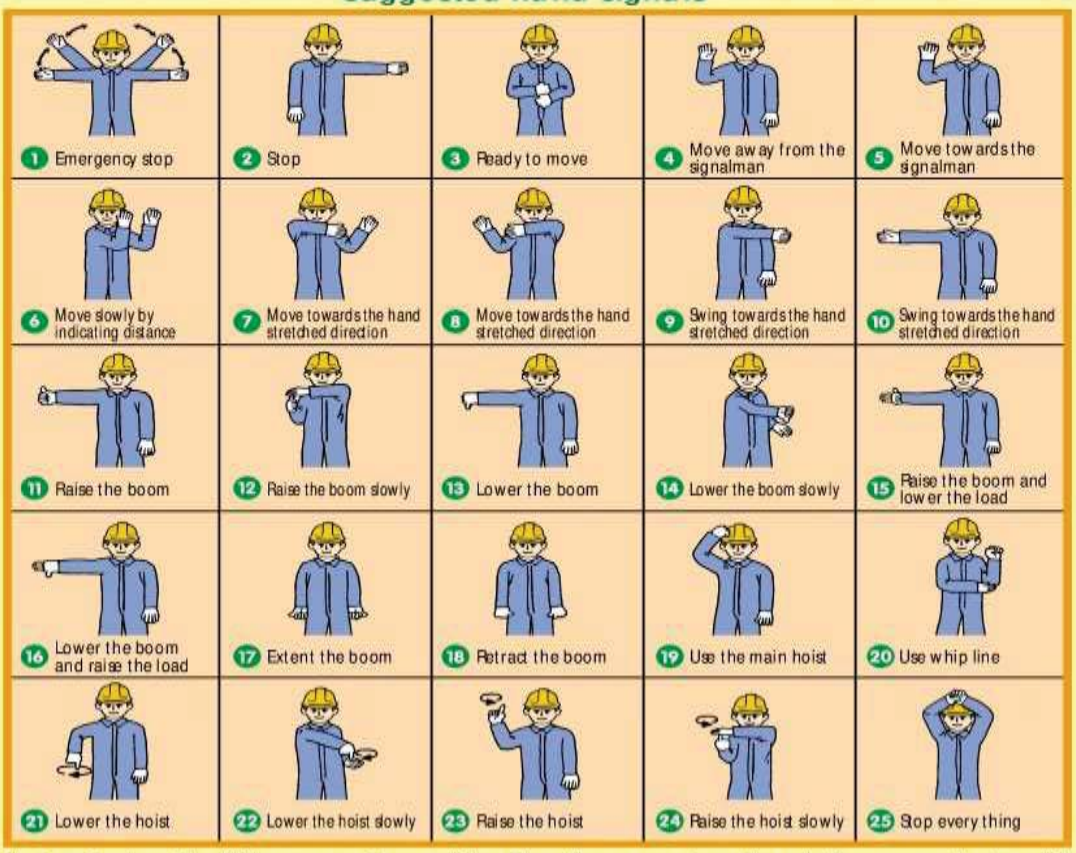

Note: During the lifting operation, either the slinger or signaller shall communicate with the operator. Other communication methods (e.g., wireless walkie-talkies, telephones, etc.) may also be used.

F□□. 1□.2.4.4 R□□□□ □ □□d□d S□□□□□□□□ Pr□□□□□□□

1□.2.□ DEMOLITION WORK

Before any demolition work is commenced and also during the process of the work the following shall be ensured, besides using the Work Permit:

1. All roads and open areas adjacent to the work site shall either be closed, suitably protected or restricted for movement
2. No electric cable or apparatus which is liable to be a source of danger nor a cable or an apparatus used by the operator shall remain electrically charged.
3. All practical steps shall be taken to prevent danger to persons employed from the risks of fire or explosion or flooding. No floor, roof or other part of the building shall be so overloaded with debris or materials as to render them unsafe.

1□.2.□ T□P□ G□□□r□□

1. All T&Ps/ MMEs should be of reputed brand/appropriate quality & must have valid test /calibration certificates bearing endorsement from competent authority of BHEL.

2. Subcontractor to also submit monthly reports of T&Ps deployed and validity test certificates to BHEL safety Officer as per the format/procedure of BHEL.

3. Tagging and punching in all lifting tool is compulsory with SWL, sr. no. and due date.

4. All T&Ps shall be inspected by authorized Third Party agency as per applicable frequency. BHEL shall be kept informed of any such scheduled inspection

5. All T&Ps shall be internally inspected in each quarter and colour coded as below.

1□.2.□.1 T□P C□□□r C□d□□□ Pr□□□d□r□:

Inspections and tests shall be documented by means of color coding which shall verify that inspections or testing are current and that all receptacles, portable Power tools, Lifting Tools & Tackles have been inspected and tested as required. The color codes used on the project shall be:

GREEN	BLUE	YELLOW	RED
January February March	April May June	July August September	October November December

T□□□□. 1□.2.□.1 T□P C□□□r C□d□□□ Pr□□□d□r□

i. The cycle of colors shall be Quarterly as a minimum or as decided by BHEL. The color code tape / Sticker shall be clearly visible to designate the period for which the inspections and tests were conducted.

ii. Following the initial inspection, the equipment must be color-coded quarterly as per color-coding instructions that will be issued by the subcontractor.

iii. Fire extinguisher with the current month color-coding inspection sticker must be provided and secured in the platform.

iv. All slings shall be regularly inspected in accordance with the requirement of the project for frequent and periodic inspections and discard immediately if they fail to meet the minimum requirements of the project.

v. The Subcontractor's Safety Officer shall ensure that all PPE is inspected prior to its issue. He is to ensure all subcontractor personnel are using safe and proper PPE equipment. Regular inspections on the PPE shall be carried out and personnel not adhering to those inspections shall be removed immediately from the site.

vi. A five (10) day interval period shall be given into each monthly color code change. During this five (10) day period either color shall be acceptable.

12. CHEMICAL HANDLING

1. Displaying safe handling procedures & MSDS for all chemicals such as lube oil, acid, alkali, sealing compounds etc, at work place.
2. Where it is necessary to provide and/or store petroleum products or petroleum mixture & explosives, the subcontractor shall be responsible for carrying out such provision / storage in accordance with the rules & regulations laid down in the relevant petroleum act, explosive act and petroleum and carbide of calcium manual, published by the chief inspector of explosives of India. All such storage shall have prior approval if necessary from the chief inspector of explosives or any other statutory authority. The subcontractor shall be responsible for obtaining the same.
3. The used containers of chemicals shall be segregated and disposed off suitably
4. In case the used containers need to be re-used, all traces of the chemical to be removed by thorough cleaning with detergents etc. under trained supervision

12. ELECTRICAL SAFETY

1. Only electricians licensed by appropriate statutory authority shall be employed by the subcontractor to carry out all types of electrical works. The subcontractor shall maintain adequate number of qualified electricians to maintain his temporary electrical installations.
2. Power supply to all equipment at site to be routed through MCBs of appropriate rating. A 'Power Supply Distribution Plan' shall be prepared and submitted to BHEL Engineer for approval

3. All power supplies through cables shall be underground or overhead with height > 3mtrs.
4. All distribution boxes shall be locked and the key controlled by site management of concerned subcontractor.
5. All individual equipment & tools at site shall be powered through Earth Leakage Circuit Breakers of 30 mA sensitivity.
6. These MCBs and ELCBs shall be regularly tested as per Clause 14
7. All fuses and fuse wires shall be of standard size and rating.
8. All electrical appliances used in the work shall be in good working condition and shall be properly double earthed other that armour earthling.
9. All extension boards shall have separate switches for all sockets / connections
10. All portable electric tools used by the subcontractor shall have safe plugging system to source of power and be appropriately earthed.
11. Providing adequate no. of 24 V sources and ensure that no hand lamps are operating at voltage level above 24 Volts especially in confined spaces like inside water boxes, turbine casings, condensers etc.
12. Electrical appliance shall have proper earthing and for appliances equal to & more than 415V shall have two separate earthing (as per IS-3043-1987)
13. Details of earth resource ad their test date to be given to BHEL safety officer as per the prescribed formats of BHEL
14. The subcontractor shall use only properly insulated and armoured cables and conform to the requirement of Indian Electricity Act and Rules for all wiring, electrical applications at site.
15. BHEL reserves the right to replace any unsafe electrical installations, wiring, cabling etc. at the risk & cost of the subcontractor.
16. No maintenance work shall be carried out on live equipment
17. Adequate precautions shall be taken to prevent danger for electrical equipment. No materials on any of the sites of work shall be so stacked or placed as to cause danger or inconvenience to any person or the public
18. The subcontractor shall carefully follow the safety requirement of BHEL/ the purchaser with the regard to voltages used in critical areas.
19. Wiring and Branch Circuits Must be protected by a proper amperage over-current device such as a HRC fuse or circuit breaker. Such installations must be located so as to prevent physical damage to the wire conductors & panels.
20. **P□r□□□ E□□□r L□□□**

    a. Portable electric lights used in wet or potentially wet locations must be either low voltage type (24 volts or less) or protected by a GFI (ground fault interrupter).
    b. They must be visually checked before each use and periodically while in use to assure their original integrity is maintained.
    c. Cords with cuts, breaks, deep abrasions, etc. shall be taken out of service immediately.
    d. Repairs to extension cords shall only be performed by qualified/ licensed electricians.
    e. Must not be allowed to lie in wet or potentially wet areas.

21. U□d□r□r□□□d C□□□□:

a. Every electric line or cable of unknown origin that is discovered or exposed during a digging, drilling, probing, or similar operation is to be considered as energized and life threatening.
b. The senior company employee on the site will ensure that all necessary safety precautions are taken in order to isolate the line from all workers and the public.
c. Such precautions may include halting the operation if appropriate.
d. The senior company employee on the site is to then contact the proper authorities to have the line identified and either confirmed to be abandoned and/or made safe for continuing the work.
e. Any and all underground lines that are discovered or become severed must be considered energized on both sides, and be treated accordingly.

22. In general, equipment or machinery being moved or transported must maintain minimum clearances of 25 ft. to all power lines.
23. TAG IN/ TAG OUT must be in force in Switch Room and all Distribution Boxes for live power line. The authorized person's name and contact no shall be displayed
24. Ensure "double insulated" three - core cables and three pin connectors are used and are properly ground "all insulated" types, all electrical tools and appliances must be manufactured for industrial use.
25. All connections shall be electrically and mechanically sound and properly insulated. Taped joints are not permitted. Connections to socket outlets must be made with proper plugs.
26. Splices in electrical cords are not permitted. Repairs must be made at the socket connection and retain the same mechanical and dielectric condition of the original connection.
27. Damaged or defective electric tools, equipment and extension cords, etc. must not be used and shall be tagged out of service, removed from the work area and taken back to stores.
28. Only licensed electricians are authorized to repair and work on electrical equipment. Tampering with electric tools or equipment by others could result in termination.
29. Temporary electric cabling should be elevated 2.2 meters above the floor/ground or covered for protection. It must be kept clear of walkways and other locations where it may be exposed to damage or create a tripping hazard.
30. Energized wiring in junction boxes, circuit breaker panels and similar places must be covered and locked at all times.
31. Areas with live high voltage wires or terminals must be barricaded against entry and warning signs posted Danger – High Voltage and Authorized Personnel Only.
32. Personnel should never work on energized equipment, de-energizing (lockout/tag out) the equipment is always the first requirement.
33. The lockout and tag out procedure will be used when testing or working on, or around, energized installation.
34. Working around energized equipment should never be done alone. A second electrician must always be available for assistance.

35. If lockout/tag out of the work is infeasible (must be demonstrated), work on energized electrical circuits must be approved by the Site In-charge. All safety precautions necessary must be taken, PPE use must be evaluated per the exposure and used, i.e high/low voltage gloves, insulated shoes, overcoats/aprons, face shields, and other protective equipment like insulated tools, blankets, mats, etc. must be used.
36. The welding machines earth leads shall be properly fixed without loose contacts. The earth cable only has to be used. No steel members shall be used as earth leads.
37. Electrical crews must be qualified for the equipment and tools they work on, including being trained in Cardio-Pulmonary Resuscitation (CPR) methods and First Aid for rendering help in the event of electric shock.

□□. Q□□□□□d P□r□□□□ □□r E□□□r□□□W□r□□

One who is trained and wiremen licensed to Govt of State and familiar with the construction, operation and safety hazards of the equipment upon which they are permitted to work.

i. Qualified persons are intended to be only those who are well acquainted/experienced with and thoroughly conversant in the electric equipment and electrical hazards involved with work being performed.
ii. Only qualified persons may be permitted to work on or near exposed energized parts. Such persons are required to have been trained in three specific areas:
iii. Qualified persons must be capable of working safely on energized circuits;
iv. Must be familiar with the proper use of special precautionary techniques and procedures bases on equipment and exposure; and
v. Must be familiar with required personal protective equipment, insulating and shielding materials, and insulated tools.
vi. Qualified persons are expected to be able to evaluate unknown situations and adjust their activities in such a way that only safe work practices are used. Such behavior is the responsibility of the qualified person.
vii. It is possible and likely for an individual to be 'qualified' with regard to certain equipment in the work place, and unqualified on other equipment they must know their limitation and stop work if not qualified on what equipment they were to work on.
viii. An employee who is undergoing on-the-job training, who, in the course of such training, has demonstrated an ability to perform duties safely at his or her level of training, and who is under the direct supervision of a qualified person is considered to be a qualified person for the performance of those duties. The process must be documented as proof.

1□.2.□ USE OF HAND TOOLS AND POWER-OPERATED TOOLS

1□.2.□.1 G□□□r□□Pr□□□□□□□

a. All hands and power tools and similar equipment, shall be maintained in safe condition.
b. When power operated tools are designed to accommodate guards, they shall be equipped
c. with such guards, when in use;
d. Belts, gears, shafts, pulleys, sprockets, spindles, drums, fly wheels, chains and other reciprocating, rotating or moving parts of the equipment shall be similarly guarded;
e. Personnel using hand and power tools and exposed to the hazard of falling, flying, abrasive, and splashing objects, or exposed to harmful dusts, fumes, mists, vapors, or gases shall be

provided with the particular personal protective equipment necessary to protect them from the hazards;

f. All hand-held powered platen sanders, grinders, grinders with wheels of 5 cm or less, routers, planers, laminate trimmers, nibblers, shears, scroll saws and jigsaws with blade shanks of 0.5 cm wide or less shall be equipped with only a positive on-off control.
g. All hand-held powered drills, tappers, fastener drivers, horizontal, vertical or angle grinders with wheels greater than 5 cm in diameter, disc sanders, belt sanders, reciprocating saws, saber saws and other operating powered tools shall be equipped with a momentary contact on control provided that turnoff can be accomplished by a single motion of the same finger or fingers that turn it on.

1□.2.□.2 H□□d T□□□

a. The subcontractor shall not issue or permit the use of unsafe hand tools;
b. Wrenches including adjustable pipe end and socket wrenches shall not be used when saws are sprung to the point that slippage occurs;
c. Impact tools such as drift pins, wedges and chisels shall be kept free of mushroomed heads;
d. The wooden handles of tools shall be kept free of splinters or cracks and shall be kept tight on the tools.

1□.2.□.□ P□□ □r O□□r□□□d T□□□

a. Electric power operated tools shall be either of the approved double-insulated type or shall be grounded;
b. The use of electric cords for hoisting or lowering loads shall not be permitted;
c. Pneumatic power tools shall be secured to the hose or whip by some positive means to prevent the tool from becoming incidentally disconnected;
d. Safety clips or retainers shall be securely installed or maintained on pneumatic impact (percussion) tools to prevent attachments from being incidentally expelled;
e. All pneumatically riveting machine staplers and other similar equipment provided with automatic fastener feed, which operate at more than 7 kg/cm2 pressure at the tool a safety device on the muzzle to prevent the tool from ejecting the fasteners unless the muzzle is in contact with the work surface;
f. Compressed air shall not be used for cleaning purposes except when the pressure is reduced to less than 2 kg/cm2 and that too with effective chip guarding. The 2 kg/cm2 pressure requirement does not apply to concrete form, mill scale and similar cleaning purposes;
g. The manufacturer's safe operating for hoses, pipes, valves, filters and other fittings shall not be exceeded;
h. Only personnel who has been trained in the operation of the particular tool shall be allowed to operate power-actuated tools;
i. The tool shall be tested each day before loading to see that the safety devices are in proper working condition. The method of testing shall be accordance with the manufacturer's

recommended procedure;

j. Any tool found not in proper working order, or that which develops a defect during use, shall be immediately removed from service and not used until properly repaired;
k. Tools shall not be loaded until just prior to the intended firing time. Neither loaded nor empty tools are to be pointed at any other person. Hands shall be kept clear of the open barrel end;
l. Loaded tools shall not be left unattended;
m. Fasteners shall not be driven into very hard or brittle materials including, but not limited to, cast iron, glazed tiles, surface hardened steel, glass block, live rock, face brick or hollow tiles;
n. Driving into materials that can be easily penetrated shall be avoided unless backed by a
o. substance that will prevent the pin or fastener from passing completely through and creating a flying missile hazard on the other side;
p. No fastener shall be driven into a palled area caused by an unsatisfactory fastening;
q. Only non-sparking tools shall be used in an explosive or flammable atmosphere;
r. All tools shall be used with the correct shield, guard or attachment as recommended by the manufacturer.

1□.2.□.4 A□r□□□□□ W□□□□□ □□d T□□□□

a. All grinding wheel must be ISO certified only.
b. All grinding machines shall be supplied with sufficient power to maintain the spindle speed at safe levels under all conditions of normal operation;
c. Grinding machines shall be equipped with suitable safety guards;
d. The maximum angular exposure of the grinding wheel periphery and sides shall not be more than 900, except that when the work requires contact with the wheel below the horizontal plane of the spindle, the angular exposure shall not exceed 1200. In either case, the exposure shall begin not more than 8.650 above the horizontal plane of the spindle. Safety guards shall be strong enough to withstand the bursting of the wheel;
e. Floor and bench-mounted grinders shall be work-rests, which shall be rigidly supported and readily adjustable. Such work-rests shall be kept at a distance not to exceed 5 mm from the surface of the wheel;
f. Cup type wheels used for external grinding shall be protected by either revolving cup guard or a band type guard;
g. When safety guards are required, they shall be mounted as to maintain proper alignment with the wheel and the guard and the guard and its fastening shall be adequate strength to retain the fragments of the wheel in case of incidental breakage. The maximum angular exposure of the grinding wheel periphery and sides shall not exceed 1800;
h. Portable abrasive wheel used for internal grinding shall be provided with suitable safety flanges;
i. When safety flanges are required, they shall be used only with wheels designed to fit the flanges. Only safety flanges, of a type and design and properly assembled so as to ensure that the pieces of the wheel will be retained in case of incidental breakage, shall be used;
j. All abrasive wheels shall be closely inspected and ring tested before mounting to ensure that

they are free from cracks or defects;

k. Grinding wheels shall fit freely on the spindle and shall not be forced on. The spindle nut shall be tightened only enough to hold the wheel in place;
l. All employees using abrasive wheels shall be protected by suitable eye protection equipment.

1□.2.□.□ W□□d W□r□□□□ T□□□□

a. All fixed power driven woodworking tools shall be provided with a disconnect switch that can either be locked or tagged in the off-position;
b. The operating speed shall be attached or otherwise permanently marked on all circular saws over 0.5 m in diameter or operating at over 3000 peripheral rpm. Any saw so marked shall not be operated at a speed other than that marked on the blade. When a marked saw is re-tensioned for a different speed, the marking shall be corrected to show the new speed;
c. Automatic feeding devices shall be installed on machines wherever the nature of the work will permit. Feeder attachments shall have the feed rolls or other moving parts covered or guarded so as to protect the operator from hazardous points;
d. All portable power driven circular saws shall be equipped with guards above and below the base plate or shoe. The upper guard shall cover the saw to the depth of the teeth, except for the minimum arc required to permit the base to be tilted for bevel cuts. The lower guard shall cover the saw to the depth of the teeth, except for the minimum arc required to allow proper retraction and contact with the work. When the tool is withdrawn from the work, the lower guard shall automatically and instantly return to the covering position.

1□.2.10 START UP□COMMISSIONING AND TESTING:

There are various activities involved prior to commissioning- the major ones are -Hydraulic Test, Steam Blowing, Transformers Charging, Boiler Light Up, Rolling and Synchronisation and Full loading of unit.

a. These activities shall be personally supervised by the site executive along with the commissioning engineer.
b. Appropriate Work Permits shall be taken as applicable
c. The readiness of upstream and downstream system shall be ensured before taking up.
d. These shall be handled strictly by the authorized persons only and the team shall be suitably briefed about the activity including hazards & risks involved and control plan by the concerned executive-in-charge before start.
e. Entry of persons to the area of activity shall be suitably restricted and the emergency functions like Ambulance, first aid center and Fire station shall be intimated about the plan well in advance.
f. Tag-in/ Tag-out shall be in place while charging transformer and whenever necessary.
g. Electricians with valid wiremen license only shall be permitted to work on power lines.
h. The area and the passage shall be adequately illuminated.

1□.2.11 FIRE SAFETY

Numbers and types of Fire Extinguishers shall be ensured as follows:

Sl. N□	T□□□ □□F r□ R□□□ (C□□□□ □□F r□)	E□□□□□□□□□□□ M□d□□□ □ R□□□□□□□□l□d□□□ S□□□d□rd	S□□□□ □□E□□□□□ □□□ (M□□□□ □□ r□□□□ □ □□d□d)
1.	**CLASS □A□** Fires involving ordinary combustible materials like wood, paper, textiles, rubber etc. (Ordinary hazard or low fire load)	WATER Soda acid type, water type (gas pressure) and water type (constant air pressure) IS: 934 -1976; IS: 940 -1976; IS: 6234 -1971	For every 600 square meter floor area or part, one 9-litre capacity. Minimum 4 numbers per floor or room; should not be required to travel more than 15 meter to reach any extinguisher.
2.	**CLASS □A□** (Extra hazard & high fire load)	-do	-do – (Also, consult local fire authority).
□.	**CLASS □A□** (Special hazards)	-do	-do – Extra provision For every 100 square meter floor area or part, one 4.5 Kg. CO2; minimum 2 numbers per room; should not be required to travel more than 10 meter to reach any extinguisher.
4.	**CLASS □B□** (Fires in flammable liquids like oils, solvents, petroleum, products, varnishes, paints, etc. where blanketing effect is essential) (Storage and handling in small quantities)	FOAM / CARBON DIOXIDE / DRY CHEMICAL POWDER IS: 933 -1976; IS: 2878 1976; IS: 2171 1976; IS: 4308 -1982	For every 50 square meter floor area or part, 2 numbers 9 -liters foam or 5 kg dry powder; should not be required to travel more than 10 m in the area of storage to reach any extinguisher.
□.	**CLASS □B□**(Bulk storage other than in tank form)	-do -	-do- (but minimum 3 numbers per room)
□.	**CLASS □C□** (Fires involving gaseous substances under pressure where it is necessary to dilute the burning gas at a very fast rate with an inert gas or powder) (locations of storage and handling of gas cylinders)	CARBON DIOXIDE / DRY CHEM. POWDER. The best way to extinguish such fire is by stopping the flow of fuel gas to the fire. Container is kept cool with water spray. IS: 2878 1976; IS: 2171 -1976; IS: 4308 -1982	For every 100 square meter floor area or part; 2 numbers, 10 kg powder extinguisher or 6 kg C02; minimum 3 nos. per room; should not be required to travel more than 10 meter to reach any extinguisher.
□.	**CLASS □D□** Fires involving metals like magnesium, aluminum, zinc, potassium etc. where the burning metal is reactive to water and which require special extinguishing media or technique	SPECIAL DAY POWDER IS: 2171 -1976 IS: 4861 -1968	For every 50 square meter floor area or part, 2 nos. 5 kg special dry powder; minimum 3 nos. per room; should not be required to travel more than 10 meter to reach any extinguisher.
□.	**MI□ED OCCUPANCY** (electrical); Generators; Transformers; etc.	CARBON DIOXIDE DRY POWDER, IS: 2878 -1976; IS: 2171 -1976	For every 100 square meter floor area or part one 10 kg C02. Minimum 2 numbers for every location should not be required to travel more than 10 meter to reach an extinguisher.
N□□□: Due to peculiarities of the power plant construction sites, there would be locations in the construction areas of Boiler, Turbine, Generator, Transformer, etc. where different types of fire risk (classes of fire) may co-exist. Special			

care shall be taken while selecting and installing portable fire extinguishers for such locations so that all types of fire risk that may co-exist, are adequately covered. Similar special care shall be taken for storage areas.

1. All Electrical welding booths shall be equipped with appropriate Fire Extinguisher
2. Appropriate Fire Extinguishers shall be made within easy reach of all welding operations
3. Fire extinguishers shall be regularly tested and last checked date to be indicated on each.
4. Providing appropriate firefighting equipment at designated work place and nominate a fire officer/warden adequately trained for his job.
5. Subcontractor shall provide enough fire protecting equipment of the types and numbers at his office, stores, temporary structure in labour colony etc. Such fire protection equipment shall be easy and kept open at all times.
6. The fire extinguishers shall be properly refilled and kept ready which should be certified at periodic intervals. The date of changing should be marked on the Cylinders.
7. All other fire safety measures as laid down in the “codes for fire safety at construction site” issued by safety coordinator of BHEL shall be followed.
8. Non-compliance of the above requirement under fire protection shall in no way relieve the subcontractor of any of his responsibility and liabilities to fire incident occurring either to his materials or equipment or those of others.
9. Emergency contacts nos. must be displayed at prominent locations
10. Tarpaulin being inflammable should not be used (instead, only non-infusible covering materials shall be used) as protective cover while preheating, welding, stress relieving etc. at site.

1□.2.12 HSE PREPAREDNESS FOR AD□ERSE CLIMATES AND WEATHER

Subcontractor to remain updated on possible adverse weather conditions through reliable sources and all precautions taken accordingly.

1□.2.12.1 SUMMER

1. The Working Time and Lunch Hour will be as per instruction of Statutory Authorities (no work between 11am to 3:30pm). However, in case temp comes down due to rain/cloudy weather work will continue as per normal routine.
2. During long lunch break, worker will be allowed to go back home for rest. Those who will like to stay back will avail at the facility of rest shed or other designed area.
3. They will be allowed to take small break during work as per their need.
4. Water sprinkling will be done on roads to reduce dust concentration.
5. Workers will be provided with adequate cool drinking water and Butter milk/Lemon water etc.
6. Adequate ORS stock will be made available at the work location in the First-Aid Box for use as needed and at First-aid Center for emergency need.
7. Fire prevention shall be on high alert, with removal of dry grass and bushes, etc, inside and outside the surrounding work areas. No smoking, and control of open flame/sparks shall be maintained and monitored.
8. Worker will be informed about the Do’s and Don’ts to be followed during summer in the Pre Job Brief.

Do's & Don'ts

9. Drink plenty of cool water and other non-alcoholic fluid and keep body well hydrated.
10. Eat salt in food to replenish loss of salt through sweating.
11. Avoid over physical exercise.
12. Have adequate sleep at night.
13. Eat light and less spicy food
14. Avoid eating food which was cooked long time ago.
15. Nobody should use small water bodies such as pits, running rain water through crevices etc. for drinking and cleaning purpose as it may be unhygienic.

E□ □r□□□□□ H□□d□□□□

In case of emergency due to heat disorder:

16. Rescue the victim from workplace and place under shed.
17. If to be rescued from height, use stoke basket or rescue kit.
18. Inform Ambulance immediately.
19. If nearby any air conditioned room/shed is available, place him inside the room/shed.
20. Administer First aid by trained First aider for Heat Disorder
21. If conscious, give him ORS solution to drink.
22. If required send the victim hospital immediately.

1□.2.12.2 M□□□□□□

A. H□□□□□W□r□ □ S□r□□□□r□□S□□□□□:

1. Ensure that all height work platforms are barricaded and avoid any highly hazardous
2. height work.
3. Ensure that all personnel have good quality and intact safety shoes
4. Stop all dangerous height work during rain
5. Explain Do's and Don'ts to workers during Tool Box Meetings
6. Ensure that there are no weak structures, boards etc. that can fall during high winds
7. Do not allow any loose material (e.g. GI sheet, Ply board, empty cement bag, aluminum foil, foam sheets etc.) on roof sheds or top of structures.
8. Do not permit any one to ride up or come down scaffolds frame work during heavy wind or rain.
9. Provide "anchor" of adequate strength to scaffolds and other high-rise structures.
10. All rest sheds and GI sheds will be anchored into the round and wall and roof panels will be secured with J hook to prevent shed from blowing over or parts/pieces becoming airborne. Proper earthing per IS standard is also to be installed.
11. Do not go alone nor permit anyone to stay at tower-tops, roof-tops, high structures or on electrical poles during the course of stormy weather or heavy rain.

B. E□□□r□□□:

1. All electrical connections / loads have to be routed through ELCB / RCCB (residual current circuit breaker) whose rating should be 30mA.
2. RCCB operational checks need to be done DAILY / WEEKLY during monsoon season.
3. Avoid joints on power cables which need to be laid over-head or under-ground, better not to have any joint at all. In case joints become essential, such cables must be housed rigidly and insulation must be provided as per approved standard. The joint shall be suitable for outdoor use.
4. All electrical distribution board shall be properly covered at top and sides to protect from rain water. Extension boards shall be protected from rain water.
5. Ensure proper “earthing” for each and every electrical appliance.
6. Double earthing need to be provided for 3-phase power supply and for voltage more than 220V.
7. Provide lightening arrestors at the top of Boiler 3 and boiler 4 and rest sheds which are not covered by existing lightening arrestor of other installation.

C. O□□□r□:

1. Maintain smooth flow on open drains. i.e. no obstruction or blockade shall be made on storm water drains. If required, make temporary drains.
2. Arrange back-filling of excavated pits on war-footing basis.
3. Arrange bringing down booms of all cranes, hydra machines during stormy weather (wind speed 40-50 kmph)
4. Confirm that all gantry cranes are effectively choked to prevent rolling and toppling.
5. Do not forget to deep ready a dew battery operated lights at site-offices during rainy season.
6. Avoid using wet damp clothes.
7. Barricade excavated zone filled with water.
8. Engage diesel operated water pump to dewater work area. For electrically operated water pump, the starter shall be protected from rain water. All rotating parts shall be guarded. Ensure availability of sufficient water pumps.

D. H□□□□ □□d □□□□□□:

1. Monsoon reduces the immunity of our body and makes us vulnerable to many diseases which are commonly associated with this season. It is time for us to keep our body challenging against disease by boosting our immunity and taking safety measures against these diseases.

2. The diseases associated with monsoon are Malaria, Jaundice, Gastro-intestinal infections, like typhoid, cholera etc. apart from these viral infections like cold and cough also make their presence felt. Majority of above said diseases are on account of:
3. Puddle of water formed due to rain become breeding grounds for mosquitoes which spread disease like, malaria and dengue fever. As a precautionary measure against mosquito-bite disease one can use mosquito net around the end which is better choice to mosquito repellants like mats and coils.
4. Pollution of drinking water during monsoon is very common. It is very necessary to drink clean and pure water when water-borne monsoon diseases like diarrhea and gastro-intestinal infections threaten us.
5. Walking in dirty water during rainy season leads of numerous fungal infection which affect toes and nails. Diabetic patients have to take a special care about their feet. Keeping feet always dry and clean is very necessary. Avoid walking in dirty water. Keep shoes socks and raincoats dry and clean.

E. Workmen will be made aware of following Do's and Don'ts:

1. Do not sleep in daytime.
2. Avoid over physical exertion.
3. During lightning and thunder storm, do not take shelter under tree. Take shelter inside rest shed or store room.
4. Wash vegetables with clean water and steam them well to kill germs.
5. Avoid eating un-cooked foods and salads should be washed properly before consumption.
6. Drink plenty of water and keep body well-hydrated.
7. Always keep the surrounding area dry and clean. Don't allow to get water accumulated around.
8. Keep body warm as viruses attack immediately when body temperature goes down.
9. Do not enter air conditioned room with wet hair and damp cloths.
10. Dry your feet and webs with soft dry cloth whenever they are wet.
11. Eat light and less spicy food.
12. Avoid eating food which was cooked long time ago.
13. Eat salt in food to replenish loss of salt through sweating.

1□.2.12.□ E□ □r□□□□□ W□□□□□r C□□d□□□□□

A. C□□□□□□S□□□r□ □□□□d□r □□□r□

In the event of Cyclone/Severe thunder storm, alert will be issued by subcontractor on notification received by Govt. authorities/Metrological departments Customer or BHEL.

T□□ □□□□□□□ r□□□□r□d d□r□□□ □□□□□□□□r□□□□ □ □□□□□r:

1. Check and advice subcontractors to cleanup work area. Pick up all loose and unused material of respective supervisor's area.
2. Tie to secure all gas cylinders to avoid displacement and unsafe conditions which could be due to wind pressure.

3. Secure portable electricity generating sets and other equipment, pumps, hoses etc.
4. Make preparation for removal of water logging.
5. Take review of work activity and make preparation for removal of equipment and material from vulnerable areas.
6. Isolate/turn off all electrical power form the main panel/switches. Secure and anchor panels properly.
7. Recheck anchorage/tie of all temporary structures/sheds, tall objects, cranes, rigs, scaffolds etc. to avoid toppling due to wind force.
8. Cranes boom shall be secured, either locked or lowered the booms as reasonably and practicably possible and rigs to safe position for the safety point of view.
9. Group up all trash barrels, wooden pallets, forms; wooden decks etc. and anchor properly.
10. Welding machines, air compressors and such equipment are to be grouped together and secured to the stable objects. Welding leads, electrical cables, hoses are to be rolled up and secured properly.
11. Set on site vehicles on high ground in the site area with brakes set firmly.
12. Anchor all tanks, vessels, gas cylinders that may be moved by high wind and water.
13. Evacuate job site.

P□r□□□□□E□□□□□□□:

14. Personnel Evacuation will be required if predicted wind speed and storm surge heights are beyond acceptable limits as per the instructions from Govt. Authorities/ Metrological departments or Customer.
15. Once the warning is received for personnel evacuation, an emergency response team shall be formed. The team will work with local authorities and other agencies formed/deployed to evacuate and transport all personnel involved in the project to the cyclone shelter.
16. Cyclone may be followed by the calm “EYE”, be aware of it. If the wind suddenly drops, don’t assume the cyclone is over. Violent wind may resume from the opposite side direction. Wait for the official “All clear Signal”.
17. After the cyclone, do not go outside until officially communicated about safe situation outside. Use recommended routes for returning. Do not panic or rush while returning.
18. Checking of gas leaks and well being of electrical appliances is essential before leaving the site.
19. Follow local communications for official warning and advice. The construction Manager shall also obtain updates from customer/metrological departments and communicate to the personnel on project site.

1□.2.12.4 Pr□□□r□d□□□□ □□r O□□□r Ad□□r□□ C□□□ □□□□ □□d W□□□□□r C□□d□□□□□

All Preventive and Precautionary measures to ensure Health & Safety of workers in all possible adverse weather conditions based on the analysis of the local area conditions to be taken by the subcontractor

1□.□ EN□IRONMENTAL CONTROL

1. Environment protection has always been given prime importance by BHEL. Environmental

damage is a major concern of the principal subcontractor and every effort shall be made, to have effective control measures in place to avoid pollution of Air, Water and Land and associated life.

2. Subcontractor shall list out all applicable environmental aspects and impacts, and ensure control measures to manage the same.
3. Chlorofluorocarbons such as carbon tetrachloride and trichloroethylene shall not be used.
4. Waste disposal shall be done in accordance with the guidelines laid down in the project specification.
5. Any chemical including solvents and paints, required for construction shall be stored in designated bonded areas around the site as per MSDS.
6. In the event of any spillage, the principle is to recover as much material as possible before it enters drainage system and to take all possible action to prevent spilled materials from running off the site. Subcontractor shall use appropriate MSDS for clean-up technique. Subcontractor shall be responsible for the cleanliness of their own areas.
7. Subcontractor shall ensure that noise levels generated by plant or machinery are as low as reasonably practicable. Where the subcontractor anticipates the generation of excessive noise levels from his operations the subcontractor shall inform BHEL accordingly so that reasonable & practicable precautions can be taken to protect other persons who may be affected.
8. It is imperative on the part of the subcontractor to join and effectively contribute to environmental protection measures such as tree plantation and towards social causes and maintaining good relations with local populace.
9. The subcontractor shall carry out periodic air and water quality check and illumination level checking in respective area of work place and take suitable control measure to maintain the same as per applicable laws / standards

1□.□.1 WASTE MANAGEMENT

1. Subcontractor shall take suitable measures for waste management and fulfilling requirements of environment related laws/legislation as a part of normal construction activities.
2. Compliance with the legal requirements on storage/ disposal of paint drums (including the empty ones), Lubricant containers, Chemical Containers, and transportation and storage of hazardous chemicals will be strictly maintained.
3. Details of E-Waste, Hazardous Waste, shall be submitted to BHEL as per Format No. HSEP: 14-F18 and HSEP: 14-F19 respectively

1□.□.1.1 BINS AT WORK PLACE

1. Sufficient rubbish bins shall be provided close to workplaces.
2. Bins should be painted yellow and numbered.
3. Sufficient nos. of drip trays shall be provided to collect oil and grease.
4. Sufficient qty. of broomsticks with handle shall be provided.
5. Adequate strength of employees should be deployed to ensure daily monitoring and service for waste management.

1□.□.1.2 STORAGE AND COLLECTION

1. Different types of rubbish/waste should be collected and stored separately.

2. Paper, oily rags, smoking material, flammable, metal pieces should be collected in separate bins with close fitting lids.
3. Rubbish should not be left or allowed to accumulate on construction and other work places.
4. Do not burn construction rubbish near working site.

1□.□1.□ SEGREGATION

1. Earmark the scrap area for different types of waste.
2. Store wastes away from building.
3. Oil spill absorbed by non-combustible absorbent should be kept in separate bin.
4. Clinical and first aid waste stored and incinerated separately.

1□.□1.4 DISPOSAL

1. Sufficient containers and scrap disposal area should be allocated.
2. All scrap bin and containers should be conveniently located.
3. Provide self-closing containers for flammable/spontaneously combustible material.
4. Keep drainage channels free from choking.
5. Make schedule for collection and disposal of waste.

1□.□1.□ WARNING AND SIGNS

1. Appropriate signage to be displayed at scrap storage area
2. No toxic, corrosive or flammable substance to be discarded into public sewage system.
3. Waste disposal shall be in accordance with best practice.
4. Comply with all the requirements of Pollution Control Board (PCB) for storage and disposal of hazardous waste.

1□.4 HOUSEKEEPING

1. Keeping the work area clean/ free from debris, removing unused scaffoldings, scraps, insulation/ sheeting wastage /cut pieces temporary structures, packing woods etc. will be in the scope of the subcontractor.
2. Such cleaning has to be done by subcontractor within quoted rate, on daily basis by dedicated identified groups equipped with all require PPEs and training. The details of housekeeping group shall be provided to BHEL.
3. If such activity is not carried out by subcontractor / BHEL is not satisfied, then BHEL may get it done by other agency and actual cost along with BHEL overheads will be deducted from subcontractor's bill. Such decisions of BHEL shall be binding on the subcontractor.
4. Pests, such as beehives etc. shall be periodically removed in a humane fashion

□. **F□□□□ □□□ □r□ □□ □□ □□□□□ □□r□ □□□□ d□□□ □□□□.**

i. All surplus earth and debris are removed/disposed of from the working areas to identified locations.
ii. Unused/Surplus cables, steel items and steel scrap lying scattered at different places /elevation within the working areas are removed to identify locations.
iii. All wooden scrap, empty wooden cable drums and other combustible packing materials, shall

be removed from workplace to identified locations. Sufficient waste bins shall be provided at different work places for easy collection of scrap/waste. Scrap chute shall be installed to remove scrap from high locations

iv. Access and egress (stair case, gangways, ladders etc.) path should be free from all scrap and other hindrances.
v. Workmen shall be educated through tool box talk about the importance of housekeeping and encourage not to litter.
vi. Labor camp area shall be kept clear and materials like pipes, steel, sand, concrete, chips and bricks, etc. shall not be allowed in the camp to obstruct free movement of men and machineries.
vii. Fabricated steel structures, pipes & piping materials shall be stacked properly.
viii. No parking of trucks/trolleys, cranes and trailers etc. shall be allowed in the camp, which may obstruct the traffic movement as well as below LT/HT power line.
ix. Utmost care shall be taken to ensure over all cleanliness and proper upkeep of the working areas

1□.□ TRAFFIC MANAGEMENT

1□.□.1 SAFE WORKPLACE TRANSPORT SYSTEM

1. Traffic routes in a work place shall be suitable for the persons or vehicles using them.
2. Traffic routes for pedestrians and vehicles shall be clearly demarcated and indicated
3. Traffic routes shall never intersect the area of work and shall not endanger the site personnel
4. For internal traffic, lines marked on roads / access routes and between buildings shall clearly indicate where vehicles are to pass.
5. Temporary obstacles shall be brought to the attention of drivers by warning signs / hazard cones.
6. Power cables shall be maintained at a minimum height above ground as specified in Indian Electricity Act & Rules.
7. Sensible speed limits shall set and clearly displayed. Painted Speed ramps preceded by a warning signs or marker are necessary for stretches of roads exceeding 50 meters.
8. The traffic route should be wide enough to allow vehicles to pass and re-pass oncoming or parked traffic and it may be advisable to introduce on-way system or parking restrictions.
9. Safest route shall be provided between places where vehicles have to call or deliver.
10. Avoid vulnerable areas/items such as fuel or chemicals tanks or pipes, open or unprotected edges and structures likely to collapse
11. Safe areas shall be provided for loading and unloading of material. Loading / Unloading Permit shall be taken from BHEL prior to any significant loading / unloading activity
12. Avoid sharp or blind bends. If this is not possible hazards should be indicated e.g. blind corner.
13. Ensure road crossings are minimum and clearly signed.
14. Entrance and gateways shall be wide enough to accommodate a second vehicle without causing obstruction.
15. Forklift trucks shall not pass over road hump unless of a type capable of doing so.

16. Overhead electric cable, pipes containing flammable hazardous chemical shall be shielded by using goal posts height gauge posts or barriers.
17. The height of Power cables above areas of movement shall conform to Indian Electricity Rules
18. Road traffic signs shall be provided on prominent locations for prevention of accidents and hazards and for quick guidance and warning to employees and public.
19. Safety signs shall be displayed as per the project working requirement and guideline of the state in which project is done.
20. Vehicles hired or used shall not be parked within the 15m radius of any working area. Any vehicle, that is required to be at the immediate/near the vicinity, shall be approved by the person in-charge of the site.

1□.□.2 TRAFFIC ROUTE FOR PEDESTRIANS

1. Where traffic routes are used by both pedestrians and vehicles road shall be wide enough to allow vehicles and pedestrians safely.
2. Separate routes shall be provided for pedestrians to keep them away from vehicles. Provide suitable barriers/guard at entrances/exit and the corners or buildings.
3. Where pedestrian and vehicle routes cross, appropriate crossing shall be provided.
4. Where crowd is likely to use roadway e.g. at the end of shift, stop vehicles from using them at such times.
5. Provide high visibility clothing for people permitted in delivery area.

1□.□.□ WORK □EHICLES

Work vehicles shall be as safe stable efficient and roadworthy as private vehicles on public roads. Subcontractors shall ensure that drivers are suitably trained and have valid license and experience for the designated class of vehicle. All vehicle e.g. heavy motor vehicle forklift trucks dump trucks mobile cranes shall ensure that the work equipment conforms to the following:

1. A high level of stability.
2. A safe means of access/egress.
3. Suitable and effective service and parking brakes.
4. Windscreens with wipers and external mirrors giving optimum all round visibility.
5. Provision of horn, vehicle lights, reflectors, reversing lights, reversing alarms.
6. Provision of seat belts.
7. Guards on dangerous parts.
8. Driver protection - to prevent injury from overturning and from falling objects/materials.
9. Driver protection from adverse weather.
10. No vehicle shall be parked below HT/LT power lines in conformance to Indian Electricity Act & Rules.
11. Valid Pollution Under Control certification for all vehicles

1□.□.4 DAILY CHECKS BY DRI□ER

There should also be daily safety checks containing below mentioned points by the driver before the vehicle is used. Subcontractors should ensure that drivers carry out these checks as a minimum.

Brakes	Mirrors	Warning signals
Tires	Windscreen waters	Specific safety system i.e. control interlocks
Steering	Wipers	

1□.□.□ TRANSPORTATION OF PERSONNEL AND MATERIALS BY □EHICLES

1. All drivers shall hold a valid driving License for the class of vehicle to be driven and be registered as an authorized BHEL driver with the Administration Department.
2. Securing of the load shall be by established and approved methods, i.e. chains with patented tightening equipment for steel/heavy loads. Sharp corners on loads shall be avoided when employing ropes for securing.
3. All overhangs shall be made clearly visible and restricted to acceptable limits
4. Load shall be checked before moving off and after traveling a suitable distance.
5. On no account is construction site to be blocked by parked vehicles Drivers of vehicles shall only stop or park in the areas designate by the stringing foreman.
6. Warning signs shall be displayed during transportation of material.
7. All vehicles used by Subcontractor shall be in worthy condition and in conformance to the Land Transport requirement

1□.□.□ MAINTENANCE

All Vehicles used for transportation of man and material shall undergo scheduled inspections on frequent intervals to secure safe operation. Such inspections shall be conducted in particular for steering, brakes, lights, horn, doors etc. Site management shall ensure that work equipment is maintained in an efficient, working order and in good repair. Inspections and services carried out at regular intervals of time and or mileage. No maintenance shall be carried below HT/LT power lines.

1□.□ EMERGENCY PREPAREDNESS AND RESPONSE

1. Subcontractor shall develop Emergency preparedness and response capability and Emergency Response Team as per HSEP06: HSE Procedure for Emergency Preparedness and Response
2. Availability of adequate number of first aiders and fire warden shall be ensured
3. All the subcontractor's supervisory personnel and sufficient number of workers shall be trained for fire protection systems. Enough number of such trained personnel must be available during the tenure of contract. Subcontractor should nominate his supervisor to coordinate and implement the safety measures and communicate the same to BHEL.
4. Assembly point shall be earmarked and access to the same from different location shall be shown
5. Fire exit shall be identified and pathway shall be clear for emergency escape.
6. Appropriate type and number of fire extinguisher shall be deployed as per Clause No. 13.2.11 and validity shall be ensured periodically through inspection
7. Adequate number of first aid boxes shall be strategically placed at different work places to cater

to all emergency needs. Holder of the first aid box shall be identified on the box itself who will have the responsibility to maintain the same.

8. First aid center shall be developed at site with trained medical personnel and ambulance
9. Emergency contact numbers of the site shall be displayed at prominent locations.
10. Tie up with fire brigade shall be done in case customer is not having fire station.
11. Tie up with hospital shall be ensured in order to ensure the availability of following services to victims quickly without wasting precious time:
    a. Intensive Care Unit with Ventilator and other necessary life support systems
    b. Facility of specialized Orthopedic Surgery – in case of fracture / amputation
    c. Facility of specialized brain / neuro surgery – in case of head trauma
    d. Facility of specialized burn unit / ward – in case of Fire / burn injury
    e. and other facilities as per requirement at site location

    In case tie up with multiple hospitals is required to cover all possible accidents, same shall be done. The list of facilities to be regularly checked and updated.
12. A detailed emergency services (Fire / Medical etc.) tie up plan shall be submitted to BHEL in monthly report Format No. HSEP:14-F05
13. Mock drill shall be conducted on different emergencies periodically to find out gaps in emergency preparedness and taking necessary corrective action

14 HSE INSPECTION

Inspection on HSE for different activities being carried out at site shall be done to ensure compliance to HSEMS requirements. The subcontractor shall maintain necessary safety equipment as applicable, to enable inspection personnel/agency perform Inspection. If any test equipment is found not complying with proper safety requirements then the Inspection Agency may withhold inspection, till such time the desired safety requirements are met.

The requirements of respective work permits are to be ensured by respective supervisors, safety personnel and area in-charges. In addition, the formats & checklists as per Clause 21 of this document provided by BHEL shall be used for inspection by Safety personnel (as a minimum), and records of inspection to be maintained. BHEL shall reserve the right to modify any Format in this document or introduce additional checklists / formats to ensure regular inspection of all equipment as per requirement.

14.1 DAILY HSE CHECKS

Both the Site Supervisors and HSE Supervisors are to conduct daily site Safety inspection around work activities and premises to ensure that work methods and the sites are maintained to an acceptable standard. The following are to form the common subjects of a daily safety inspection:

1. **H□□□□W□r□:**
   a. Safe, barricaded platform
   b. PPEs
   c. Proper method
   d. Awareness
2. Personal Safety wears & gear compliance.
3. Complying with site safety rules and permit-to-work (PTW).
4. Positions and postures of workers.
5. Use of tools and equipment etc. by the workers.
6. The inspection shall be carried out just when work starts in beginning of the day, during peak activities period of the day and just before the day's work ends.

14.2 INSPECTION OF HEIGHT WORKING

1. Any kind of height work (above 2 meters) shall not be carried out without active physical supervision by concerned supervisor or safety personnel. All non-conformances related to height work shall be handled on priority and closed immediately after halting the work.
2. A roster of personnel deployed for inspection of height work and other critical activities shall be prepared and submitted to BHEL in monthly report Format No. HSEP:14-F05, in order to ensure effective supervision at all times
3. Inspection on height working shall be conducted **d**□□□□ by supervisors before start of work to ensure safe working condition including provision of:

a. Fall arrestor b. Lifelines c. Safety nets	d. Fencing and barricading e. Warning signage f. Covering of opening	g. Proper scaffolding with valid Tags, access and egress. h. Illumination

4. Inspection on height working shall be conducted once in a week by HSE officer as per
5. Format no. HSEP: 14-F10.
6. Medical fitness, including vertigo test of height worker shall be ensured.
7. Height working shall not be allowed during adverse weather.

14.□ INSPECTION OF PPE

PPEs shall be inspected by HSE officer at random once in a week as per Format no. HSEP: 14-F06 for compliance to standard and provisions and any adverse observation shall be recorded in the PPE register.

14.4 INSPECTION OF T□P□

1. All T& Ps being used at site shall be inspected by HSE officer once in a month as per specific Formats in this document, or (if not available) general Format no. HSEP: 14-F07 for its healthiness and maintenance.
2. A master list of T&Ps and validity of their inspection certificates shall be maintained by each agency and details shall be submitted to BHEL in monthly format no. HSEP:14-F05.
3. The T&Ps which require third party inspection shall be checked for its validity during inspection.

The third party test certificate should be accompanied with a copy of the concerned competent person's valid qualification record. BHEL shall be given advance intimation of Third Party Inspection. BHEL shall associate with Inspection as per discretion.

14. INSPECTION OF CRANES AND WINCHES

1. Cranes and winches shall be inspected by the operator through a daily checklist for its safe condition (as provided by the equipment manufacturer) before first use of the day.
2. Cranes and Winches shall be inspected by HSE officer once in a month as per Format no. HSEP: 14-F08 & F09 for healthiness, maintenance and validity of third party inspection.
3. The date of third party inspection and next due date shall be painted on cranes and winches.
4. The operators/drivers shall be authorized by sub-contractor based on their competency and experience and shall carry the I-card.
5. The operator should be above 18 years of age and should be in possession of driving license of HMV man & goods), vision test certificate and should have minimum qualification so that he can read the instructions and check list.

14. INSPECTION ON WELDING AND GAS CUTTING OPERATION

1. Supervisor shall ensure that no flammable items are available in near vicinity during welding and gas cutting activity.
2. Gas cylinders shall be kept upright.
3. Use of Flash back arrestor shall be ensured at both ends.
4. Inspection during welding and gas cutting operations shall be carried out by HSE officer once a month as per Format no. HSEP: 14-F11.
5. Use of fire blanket to be ensured to avoid falling of splatters during welding or gas cutting operation at height.
6. Availability of fire extinguisher in vicinity shall be ensured.

14. INSPECTION ON ELECTRICAL INSTALLATION APPLIANCES

1. Ensure proper earthing in electrical installation
2. Use of ELCB at electrical booth
3. Electrical installation shall be properly covered at top where required
4. Use appropriate PPEs while working
5. Use portable electrical light < 24 V in confined space and potentially wet area.
6. Monthly inspection shall be carried out as per Format no. HSEP: 14-F12.

14. INSPECTION OF ELE ATOR

1. Elevators shall be inspected by concerned supervisors once in a week as per Format no. HSEP: 14-F13.
2. All elevators shall be inspected by competent person and validity shall be ensured.
3. The date of third party inspection and next due date shall be painted on elevator.

14. MONTHLY SITE INSPECTION

Subcontractor shall carry out monthly HSE inspection of all work areas as per Format No. HSEP:14-F20 and submit to BHEL

14.10 NON-CONFORMITY HANDLING:

Any serious non-conformances identified during inspection observed shall be addressed immediately.

In case immediate closure of non-conformities is not possible:

a. work to be halted in the area
b. Non-conformance to be generated and submitted to responsible person and BHEL
c. non-conformance to be resolved through responsible agency / person
   Only after closure of serious non-conformances, work to be allowed to resume.

All non-conformances & safety violations to be recorded and closed in a time bound manner.

15 HSE PERFORMANCE

HSE performance of subcontractor shall be monitored as per BHEL criteria, based on which, marks will be awarded. Marks can be used to evaluate and rate the contractor as per BHEL internal systems

HSE performance of the subcontractor shall be monitored as per the following parameters: (For each contract-wise package). **P□r□d□□□□:** RA Bill period

Sl. No.	Parameters of measurement	Ref Clauses	Weightage	Actual
1	Availability of safety officers at site – absence up to 15% permissible. Score proportionately gets reduced with higher rate of absence. Availability to be reckoned from start date of manpower mobilization	7.1	10	
2	Attendance by the safety officer and site CM (as applicable) in the meeting convened by BHEL	20	5	
3	Level of compliance w.r.t decisions taken in previous meetings/audit/inspection/as reported.	-do-	5	
4	Timely submission of monthly report on safety in the prescribed format	11	3	
5	Timely reporting any incident including near–miss to BHEL /Customer/statutory authority (if required) and submission of investigation report of all LTIs/	12	10	

	Major Property Loss incident and HSE events			
6	Degree of PPE compliance, Fall protection arrangements and safety net coverage	8.3, 14	15	
7	Level of compliance w.r.t safety rules	13,14	25	
8	Availability of proper first-aid facility , ambulance, hygienic labor colony and other adequate labor welfare initiatives, conducting of health check-up as per BOCW requirements	8	6	
9	Conducting induction training, skill training, tool box meeting, mock-drills, HSE Promotion, Emergency Preparedness and Response. Participation in BHEL training also counted	9.0	6	
10	Level of House-keeping, Environmental Control	13.3, 13.5	10	
11	Level of general illumination	8.4.11	5	
A	**TOTAL O□□□□□d**		100	

Penalty score:

i. For each fatality: -10
ii. For each Major Incident: -07

NET TOTAL score will be arrived after deducting penalty score from Total score.

Subcontractor shall make available all data required for evaluation to BHEL as and when demanded.

1. If safety record of the subcontractor in execution of the awarded job is to the satisfaction of safety department of BHEL, issue of an appropriate certificate to recognize the safety performance of the subcontractor may be considered by BHEL after completion of the job.

2. 1.5% of running bill shall be cleared subject to certification of desired safety performance by BHEL

16 HSE PENALTIES FOR NON-COMPLIANCE

1. Nonconformity of safety rules and safety appliances will be viewed seriously and BHEL has right to impose fines on the subcontractor for every instance of violation noticed.

2. The applicable penalties for HSE violations are given in Format No. HSEP14-F14 of this document

3. The list of non-compliances given in above format is not exhaustive. The BHEL site in-charge has liberty to impose a penalty for any other non-compliance and incidents of any nature.

4. If principal customer or statutory and regulatory bodies impose penalty on ground of statutory non-compliance or non-compliance of HSE rules by the subcontractor or any incident of any nature including fatality or permanent disability, the same shall be passed on to the subcontractor with appropriate overhead

5. The penalty amount shall be recovered from subcontractors from the RA Bill, otherwise Final bill.

17 COMPENSATION TO ACCIDENT VICTIMS

1. BHEL shall recover the amount of compensation paid to victim(s) by BHEL towards loss of life / permanent disability due to an accident which is attributable to the negligence of contractor, agency or firm or any of its employees as detailed below.

b. [illegible]: Any person who suffers permanent disablement or dies in an accident as defined below.

c. **A[illegible]d[illegible]:** Any death or permanent disability resulting solely and directly from any unintended and unforeseen injurious occurrence caused during the manufacturing/ operation and works incidental thereto at BHEL factories/ offices and precincts thereof, project execution, erection and commissioning, services, repairs and maintenance, trouble shooting, serving, overhaul, renovation and retrofitting, trial operation, performance guarantee testing undertaken by the company or during any works / during working at BHEL Units/ Offices/ townships and premises! Project Sites.

d. C[illegible] r[illegible]:

i. In the event of death or permanent disability resulting from Loss of both limbs: Rs. 10,00,000/- (Rs. Ten Lakh)

ii. (ii) In the event of other permanent disability: Rs. 7,00,0001- (Rs. Seven Lakh)

e. **P[illegible]r[illegible]D[illegible]:** A disablement that is classified as a permanent total disablement under the proviso to Section 2 (I) of the Employee's Compensation Act, 1923. "

2. In addition to above, contractor shall provide appropriate compensation to victims of major and fatal incidents as per Employee Compensation Act, 1923, ESIC Act, 1948 or as per any existing Acts and guidelines

18 INTERNAL & EXTERNAL HSE AUDITS

1. Subcontractor shall extend full co-operation and maintain necessary documents & records as required by Internal & External HSE Audit carried out by BHEL. / Third Party
2. All non-conformities and observations on HSE shall be disposed of-by subcontractor in a time bound manner as detailed in Audit Report.
3. All required corrective actions shall be taken by the subcontractor in order to avoid recurrence

19 OTHER REQUIREMENTS

1. In case of any delay in completion of a job due to mishaps attributable to lapses by the subcontractor, BHEL shall have the right to recover cost of such delay from the payments due to the subcontractor, after holding an appropriate enquiry and notifying the subcontractor suitably.

2. **RISK □ COST:**

   If the subcontractor fails to improve the standards of safety in its operation to the satisfaction of BHEL after being given reasonable opportunity to do so and/or if the subcontractor fails to take appropriate safety precautions or to provide necessary safety devices and equipment or to carry out instruction regarding safety as per contractual requirements, BHEL shall have the right to take corrective steps at the risk and cost of the subcontractor after giving a notice of not less than 7 days indicating the steps that would be taken by BHEL.

3. If the subcontractor succeeds in carrying out its job in time without any fatal or disabling injury incident and without any damage to property BHEL may, at its sole discretion, favourably consider to reward the subcontractor suitably for the performance.

4. The subcontractor shall take all measures at all the sites of work to protect all persons from incidents and shall be bound to bear the expenses of every suit, action or other proceeding of law that may be brought by any persons for injury sustained, death or damage to environment

owing to neglect of the HSE precautions by the subcontractor; and shall be liable to pay any such persons such compensation, should such claim proceeding be filed against BHEL.

The subcontractor hereby agrees to indemnify BHEL against the same.

20 HSE REVIEW

BHEL shall hold HSE review meeting every month or as per requirement in order to discuss and resolve HSE issues of site and improve HSE performance. It will also discuss the incidents occurred since previous meeting, its root cause and Corrective action. The indicative agenda is given below:

1. Implementation of earlier MOM
2. HSE performance review
3. HSE inspection review w.r.t non-conformances observed and their status
4. HSE audit and CAPA
5. HSE training conducted and requirement
6. Health check-up camp
7. HSE planning for the erection and commissioning and installation activities in the coming month
8. HSE reward and promotional activities
9. HSE data analysis and improvement – Data analyzed will include non-conformances closed and pending, incident data, training data etc.

Subcontractor shall ensure presence of site in-charge, all package in-charges and safety officers, as communicated by BHEL in the meeting.
Subcontractor shall take requisite actions as per record notes and as decided in the meeting, in a time bound manner and submit compliance report to BHEL.

21 FORMATS USED

This is minimum list of Formats to be used for reporting by the subcontractor. Other Formats are indicated in respective HSE Procedures, Work Permits, OCPs or as specified by BHEL. The medium of reporting can be hard / soft as indicated by BHEL.
BHEL can modify these Formats or introduce new Formats to the extent necessary to get the desired performance data of all HSE activities.

SN	F□r□ □□N□□ □	F□r□ □□N□.	Fr□□□□□□□ □□□□□□□	R□□
1	Work at Height Permit	HSEP:14-FP01	Before start of work and regularly thereafter as per Permit conditions	00
2	Hot Work Permit	HSEP:14-FP02		00
3	Confined Space Work Permit	HSEP:14-FP03		00
4	Excavation Work Permit	HSEP:14-FP04		00
5	Radiation Work Permit	HSEP:14-FP05		00
6	Lifting Activity Work Permit	HSEP:14-FP06		00
7	Lockout-Tagout Work Permit	HSEP:14-FP07		00
8	Inspection of First Aid Box	HSEP:14-F01	Weekly	00
9	Health Check Up	HSEP:14-F02	With new Induction & as per requirement thereafter	00
10	HSE Induction / Regular / On-the-Job Training	HSEP:14-F03	With new Induction & as per requirement thereafter	00
11	Tool Box Talk	HSEP:14-F04	Daily before job start	00
12	Site HSE Report	HSEP:14-F05	Monthly	00
13	PPE Inspection	HSEP:14-F06	Weekly	00
14	PPE Issue and Receipt	HSEP:14-F06A	With new Induction	
15	Inspection of T&Ps (General)	HSEP:14-F07	Monthly / As per requirement	00
16	Inspection of Cranes	HSEP:14-F08	Monthly / As per requirement	00
17	Inspection of Winches	HSEP:14-F09	Monthly / As per requirement	00
18	Inspection of Height Working	HSEP:14-F10	Daily / As per requirement	00
19	Inspection on Welding & Gas Cutting	HSEP:14-F11	Weekly / As per requirement	00
20	Inspection on Electrical Installation	HSEP:14-F12	Weekly / As per requirement	00
21	Inspection on Elevator	HSEP:14-F13	Weekly / As per requirement	00
22	HSE Penalty	HSEP:14-F14	-	00
23	Initial Verification of PPE's & Lifting Tools & Tackles	HSEP:14-F15	As and when new PPEs and T&Ps are received	00
24	Inspection of Labor Colony	HSEP:14-F16	Monthly / as per requirement	00
25	Recording of First Aid Injuries	HSEP:14-F17	As and when such injuries occur	00
26	E-waste Handled / Generated	HSEP:14-F18	Half Yearly	00
27	Hazardous Waste at the Facility	HSEP:14-F19	Half Yearly	00
28	HSE Checklist-cum-Compliance Report	HSEP:14-F20	As per Audit Calendar	00
29	Illumination Levels	HSEP:14-F21	Weekly / As per requirement	00
30	Incident Reporting	HSEP:14-F22	-	00
31	Incident Recording	HSEP:14-F23	-	00

HSEP:14-FP01

WORK AT HEIGHT PERMIT	Permit No. & Date
Project & Unit:	Emergency Contact Nos:
BHEL Sub-contractor:	

Exact Location of Work:_____

Nature / Description of Work:_____

Duration of Work Execution □ From Date:_____to Date:_____Daily from _____ hrs. to _____hrs.

Name of Sub-Contractor Performing the Work: _____

Name of Sub-Contractor's Site Engineer (Permit Requesting Authority):_____Sign:_____

Name of Sub-Contractor's Package In-charge:_____Sign:_____Date:_____

The above described work will be done under all the safety precautions mentioned as under during the currency of the Permit.

No.	Item	Yes	Not required / Remarks
1	All workers on job are competent and medically fit (No Height Phobia) for working at height		
2	Hazards in the vicinity are identified, controlled and communicated to the worker.		
3	Scaffolding soundness inspected is available for use with valid tag		
4	Work platform is not made of bamboo or weak material. Barricading is available with Top, Mid Rails and Toe Guard.		
5	Working platform is clean without any unwanted material. Floor openings are covered.		
6	Access and exit to workplace are safe, marked and without obstruction.		
7	Adequate lighting provided (for dark hours) as per applicable lux standards (Refer HSEP:13)		
8	Safety nets are provided below working area.		
9	Area below the working platform has been cleared of all activity		
10	Ladders have been secured, inspected and provided as per BHEL standard/contract.		
11	Horizontal life lines are provided to cater to design specification of 2300 kg per person.		
12	Safety harness with life line support/ fall arrester are checked and available in working condition		
13	Safety shoes (non-slip), Helmet with chin strip available with employees		
14	Visible Signboards provided on working platforms in workers' understandable language		
15	All lifting / tightening tools, hand tools/equipment checked and in good condition		
16	ELCB provided for Electrical connections individually. Electrical cable, welding Hose/Compressed air hose properly secured and laid down without obstruction. Earth resistance is OK.		
17	Crane / Winch / Hydra operator is qualified and experienced		
18	Emergency response team & Medical Facilities available. Work area is cordoned off.		
19	Job Safety Analysis Submitted		
20	Additional Permits to be taken (Please specify & attach):		

D□□□r□□□□: *All the points mentioned in the above checklist have been checked and found OK*

Permit Receiver:

Site Engineer (Sub- Contractor):	
Signature:	
Name:	Designation:

Site Safety Officer (Sub-Contractor):	
Signature:	
Name:	Designation:

Permit Issuer:

Engineer of Concerned Execution Department (BHEL):	
Signature:	
Name:	Designation:

Site Safety Officer (BHEL):	
Signature:	
Name:	Designation:

Package-in-charge (BHEL):	
Signature:	
Name:	Designation:

Verified by Customer Representative (if applicable), Name: _____ ***Sign:*** _____ ***Date:*** _____ ***Time:*** _____

(* Permit valid for 7 days, subject to daily renewal, and extension as per overleaf instructions / record formats)

Work at Height Permit No. & Date: _____

Daily Work Area Condition Endorsement

Sl. No.	Date	Signature with Date & Time		Remarks
		Agency Safety	BHEL Safety	
Day 2				
Day 3				
Day 4				
Day 5				
Day 6				
Day 7				

Permit Extension Beyond Initially Requested Hours

Sl. No.	Extension Period		Remarks	Signature with Date & Time			
	From……. (Date & Time)	To…… (Date &Time)		Agency Site Engineer	Agency Safety Officer	BHEL Site Engineer (PIA)	BHEL Safety Officer
1.							
2.							
3.							
4.							
5.							
6							

TO BE SIGNED BY THE BHEL HSE & EXECUTION AFTER THE WORK IS OVER	
Permit is here by returned after completing the job & ensuring safe removal of men and material.	
Site Engineer, BHEL	**Site HSE Engineer, BHEL**
Signature:	Signature:
Name:	Name:

General Instructions:

1	This Permit is required for working at height of 2 mtr. and above or above excavation of 2 mtr or deeper.
2	This permit must be available at the work site all the times of the work.
3	Location and description of the work must be clearly indicated by the permittee.
4	Terms applicable must be clearly indicated by the permittee.
5	This permit shall be endorsed each day only after checking all the compliance jointly by the contractor and BHEL safety.
6	Permit shall be issued for not more than **7 days** including the issue date.
7	Permit shall be returned to the HSE Department of BHEL after completion of the job.
8	Before engaging anybody to work at height, height phobia needs to be ascertained and proper fitness certificate to be ensured.
9	All safety precautions to be taken as per work site HSE plan.
10	**Distribution of copy:**
	Original- Permittee, Duplicate –Department HOS, Contractor, Triplicate - Site HSE Dept.,

To be printed on both sides of an A4 Sheet

HSEP:14-FP02

HOT WORK PERMIT	Permit No. & Date
Project & Unit:	Emergency Contact Nos:
BHEL Sub-contractor:	

Exact Location of Work:_____

Nature / Description of Work: _____

Duration of Work Execution □ From Date:_____to Date:_____Daily from _____ hrs. to _____hrs.

Name of Sub-Contractor Performing the Work: _____

Name of Sub-Contractor's Site Engineer (Permit Requesting Authority):_____Sign:_____

Name of Sub-Contractor's Package In-charge:_____Sign:_____Date:_____

The above described work will be done under all the safety precautions mentioned as under during the currency of the Permit.

N□.	I□□□	Y□□	N□□r□□□□r□d □R□□ □r□□
1.	Welder is trained and qualified with good attendance in on-the-job training		
2.	Area ensured safe and free from all hazards (explosives etc.) with barricading and safe inlet / exit		
3.	Proper ventilation and lighting provided (in case of dark hours).		
4.	Gas hoses are in good condition and not cut / leaking		
5.	Pressure gauges/Flash back arrestor (at both ends) provided and in working condition.		
6.	Gas pressure in cylinder is within limits and hydraulic test certificate is available		
7.	Gas cylinders are stacked vertically and not below the welding / cutting area. Regulator key is available with cylinder. Gas cylinders covered with shields to prevent falling splinters.		
8.	Power supply to welding machine is through ELCB of 30 mA rating, which is tested and found ok; Earthing is tested and found OK		
9.	Welding machine input/output cables, welding holder and weld return clamp (Holder) are insulated and in good condition.		
10.	In case of welding in enclosed / confined spaces, the integrity of the structure and supports are ensured, Gas Testing done and evacuation system ensured in place		
11.	Emergency STOP buttons are in working condition. Welder /Helper knows how to operate it.		
12.	Welder & Fitter trained to connect ground/work return clamps (Holder) to work place prior to energization of welding machine.		
13.	Personal Protective equipment Minimum applicable: safety helmet, safety goggles, welding helmet, safety (rubber) shoes, leather gloves, long sleeve and nose mask -provided		
14.	In case of pits, water removed from the pit and wood/rubber insulation provided.		
15.	Safety signboards / cautions are in place.		
16.	Adequate and Suitable nos. of applicable firefighting extinguisher provided.		
17.	Nearby combustible material removed. Housekeeping done.		
18.	All workers explained about the hazards		
19.	First aid in attendance.		
20.	Any other Precautions or Permits required (Height Work, Confined Space etc.), give details and attach		

D□□□r□□□□: *All the points mentioned in the above checklist have been checked and found OK*

Permit Receiver:

Site Engineer (Sub- Contractor):		Site Safety Officer (Sub-Contractor):	
Signature:		Signature:	
Name:	Designation:	Name:	Designation:

Permit Issuer:

Engineer of Concerned Execution Department (BHEL):		Site Safety Officer (BHEL):	
Signature:		Signature:	
Name:	Designation:	Name:	Designation:

Package-in-charge (BHEL):	
Signature:	
Name:	Designation:

Verified by Customer Representative (if applicable), Name: _____Sign: _____Date: _____Time: _____

(* Permit valid for 7 days, subject to daily renewal, and extension as per overleaf instructions / record formats)

Hot Work Permit No. & Date: _____

Daily Work Area Condition Endorsement

Sl. No.	Date	Signature with Date & Time		Remarks
		Agency Safety	BHEL Safety	
Day 2				
Day 3				
Day 4				
Day 5				
Day 6				
Day 7				

Permit Extension Beyond Initially Requested Hours

Sl. No.	Extension Period		Remarks	Signature with Date & Time			
	From……. (Date & Time)	To…… (Date &Time)		Agency Site Engineer	Agency Safety Officer	BHEL Site Engineer (PIA)	BHEL Safety Officer
1.							
2.							
3.							
4.							
5.							
6							

TO BE SIGNED BY THE BHEL HSE & EXECUTION AFTER THE WORK IS OVER

Permit is here by returned after completing the job & ensuring safe removal of men and material.

Site Engineer, BHEL	**Site HSE Engineer, BHEL**
Signature:	Signature:
Name:	Name:

General Instructions:

1	This Permit is required for all kinds of Hot Work eg. Welding, cutting etc..
2	This permit must be available at the work site all the times of the work.
3	Location and description of the work must be clearly indicated by the permittee.
4	Terms applicable must be clearly indicated by the permittee.
5	This permit shall be endorsed each day only after checking all the compliance jointly by the contractor and BHEL safety.
6	Permit shall be issued for not more than **7 days** including the issue date.
7	Permit shall be returned to the HSE Department of BHEL after completion of the job.
8	Before engaging anybody to work, competency and fitness to be ensured.
9	All safety precautions to be taken as per work site HSE plan.
10	**Distribution of copy:**
	Original- Permittee, Duplicate –Department HOS, Contractor, Triplicate - Site HSE Dept.,

HSEP:14-FP03

CONFINED SPACE WORK PERMIT	Permit No. & Date
Project & Unit:	Emergency Contact Nos:
BHEL Sub-contractor:	

Exact Location of Work:_____

Nature / Description of Work:_____

Duration of Work Execution □ From Date:_____to Date:_____Daily from _____ hrs. to _____hrs.

Name of Sub-Contractor Performing the Work: _____

Name of Sub-Contractor's Site Engineer (Permit Requesting Authority):_____Sign:_____

Name of Sub-Contractor's Package In-charge:_____Sign:_____Date:_____

The above described work will be done under all the safety precautions mentioned as under during the currency of the Permit.

N□.	I□□□	Y□□	N□□r□□□r□d □ R□□ □r□□
1.	Has the equipment been Isolated from Power/Steam/Air?		
2.	Has the equipment been Isolated from liquid or gases?		
3.	Has the equipment been de-pressurized &/or drained?		
4.	Has the equipment been Blanked/blinded or disconnected?		
5.	Has the equipment been water flushed &/or steamed?		
6.	Whether man ways open and ventilated?		
7.	Whether constant Inert gas flow arranged?		
8.	Whether mechanically ventilated and adequately cooled?		
9.	Whether 24 V lighting provided inside the confined space?		
10.	Whether Radiation sources removed?		
11.	Whether training on confined space provided to the individual / group?		
12.	Whether required PPEs (hand gloves, goggles, face shield, ear plug/muff, protective clothing etc.) used?		
13.	Whether Safety harness and Lifeline used?		
14.	Whether Dust/Gas/Air Line mask used?		
15.	Whether attendant with SCBA/Air mask available?		
16.	Whether grounded air Exhaust/Blower/ AC provided?		
17.	Whether Personal Gas alarm provided?		
18.	Whether communication Equipment Provided?		
19.	Whether rescue equipment/team available?		
20.	Whether firefighting arrangement done		
21.	Any other Precautions or Permits required (Height Work, Confined Space etc.), give details and attach		

D□□□r□□□□: *All the points mentioned in the above checklist have been checked and found OK*

Permit Receiver:

Site Engineer (Sub- Contractor):	
Signature:	
Name:	Designation:

Site Safety Officer (Sub-Contractor):	
Signature:	
Name:	Designation:

Permit Issuer:

Engineer of Concerned Execution Department (BHEL):	
Signature:	
Name:	Designation:

Site Safety Officer (BHEL):	
Signature:	
Name:	Designation:

Package-in-charge (BHEL):	
Signature:	
Name:	Designation:

Verified by Customer Representative (if applicable), Name: _____Sign: _____Date: _____Time: _____

(* Permit valid for 7 days, subject to daily renewal, and extension as per overleaf instructions / record formats)

Confined Space Work Permit No. & Date: _____

Daily Work Area Condition Endorsement

Sl. No.	Date	Signature with Date & Time		Remarks
		Agency Safety	BHEL Safety	
Day 2				
Day 3				
Day 4				
Day 5				
Day 6				
Day 7				

Permit Extension Beyond Initially Requested Hours

Sl. No.	Extension Period		Remarks	Signature with Date & Time			
	From……. (Date & Time)	To…… (Date &Time)		Agency Site Engineer	Agency Safety Officer	BHEL Site Engineer (PIA)	BHEL Safety Officer
1.							
2.							
3.							
4.							
5.							
6							

TO BE SIGNED BY THE BHEL HSE & EXECUTION AFTER THE WORK IS OVER	
Permit is here by returned after completing the job & ensuring safe removal of men and material.	
Site Engineer, BHEL	**Site HSE Engineer, BHEL**
Signature:	Signature:
Name:	Name:

General Instructions:

1	This Permit is required for all confined space tasks, where injury can happen due to lack of oxygen, or chances of fire are there due to gas accumulation.
2	This permit must be available at the work site all the times of the work.
3	Location and description of the work must be clearly indicated by the permittee.
4	Terms applicable must be clearly indicated by the permittee.
5	This permit shall be endorsed each day after checking all the compliance jointly by the contractor and BHEL safety.
6	Permit shall be issued for not more than **7 days** including the issue date.
7	Permit shall be returned to the HSE Department of BHEL after completion of the job.
8	Before engaging anybody to work, competency and fitness to be ensured.
9	All safety precautions to be taken as per work site HSE plan.
10	**Distribution of copy:**
	Original- Permittee, Duplicate –Department HOS, Contractor, Triplicate - Site HSE Dept.,

HSEP:14-FP04

EXCAVATION WORK PERMIT	Permit No. & Date
Project & Unit:	Emergency Contact Nos:
BHEL Sub-contractor:	

Exact Location of Work:_____

Nature / Description of Work:_____

Duration of Work Execution □ From Date:_____to Date:_____Daily from _____ hrs. to _____hrs.

Name of Sub-Contractor Performing the Work: _____

Name of Sub-Contractor's Site Engineer (Permit Requesting Authority):_____Sign:_____

Name of Sub-Contractor's Package In-charge:_____Sign:_____Date:_____

The above described work will be done under all the safety precautions mentioned as under during the currency of the Permit.

N□.	I□□□	Y□□	N□□r□□□r□d □ R□□ □r□□
1	Precautions taken for Underground Electrical Cable		
2	Precautions taken for Under / Above ground sewer/Drinking Water Line		
3	Precautions taken for Underground Telecommunication Line		
4	Precautions taken for Underground Product/Utility Line		
5	Precautions taken for Underground Fire Water Line		
6	Shoring / Shuttering / Sheet piling done to prevent collapse of excavation walls. Strength of Excavation wall ensured at all times		
7	Hard Barricading & Edge Protection provided		
8	Separate Safe Access for Man and Vehicle		
9	Lighting arrangement		
10	Banks Man Provided		
11	Required basic PPEs provided		
12	Slope Cutting/Benching Maintained		
13	Excavated soil / Construction Material / equipment kept away from the edge.		
14	First aid in attendance.		
15	Any other Precautions or Permits required (Height Work, Confined Space etc.), give details and attach		

D□□□r□□□□: *All the points mentioned in the above checklist have been checked and found OK*

Permit Receiver:

Site Engineer (Sub- Contractor):	**Site Safety Officer (Sub-Contractor):**
Signature:	Signature:
Name: Designation:	Name: Designation:

Permit Issuer:

Engineer of Concerned Execution Department (BHEL):	**Site Safety Officer (BHEL):**
Signature:	Signature:
Name: Designation:	Name: Designation:

Package-in-charge (BHEL):
Signature:
Name: Designation:

Verified by Customer Representative (if applicable), Name: _____Sign: _____Date: _____Time: _____

(* Permit valid for 7 days, subject to daily renewal, and extension as per overleaf instructions / record formats)

Excavation Work Permit No. & Date:

_____

Daily Work Area Condition Endorsement

Sl. No.	Date	Signature with Date & Time		Remarks
		Agency Safety	BHEL Safety	
Day 2				
Day 3				
Day 4				
Day 5				
Day 6				
Day 7				

Permit Extension Beyond Initially Requested Hours

Sl. No.	Extension Period		Remarks	Signature with Date & Time			
	From……. (Date & Time)	To…… (Date &Time)		Agency Site Engineer	Agency Safety Officer	BHEL Site Engineer (PIA)	BHEL Safety Officer
1.							
2.							
3.							
4.							
5.							
6							

TO BE SIGNED BY THE BHEL HSE & EXECUTION AFTER THE WORK IS OVER

Permit is here by returned after completing the job & ensuring safe removal of men and material.

Site Engineer, BHEL	**Site HSE Engineer, BHEL**
Signature:	Signature:
Name:	Name:

General Instructions:

1	This Permit is required for all excavation tasks 1.22 mtr or deeper
2	This permit must be available at the work site all the times of the work.
3	Location and description of the work must be clearly indicated by the permittee.
4	Terms applicable must be clearly indicated by the permittee.
5	This permit shall be endorsed each day after checking all the compliance jointly by the contractor and BHEL safety.
6	Permit shall be issued for not more than **7 days** including the issue date.
7	Permit shall be returned to the HSE Department of BHEL after completion of the job.
8	Before engaging anybody to work, competency and fitness to be ensured.
9	All safety precautions to be taken as per work site HSE plan.
10	**Distribution of copy:**
	Original- Permittee, Duplicate –Department HOS, Contractor, Triplicate - Site HSE Dept.,

HSEP:14-FP05

RADIATION WORK PERMIT	Permit No. & Date
Project & Unit:	Emergency Contact Nos:
BHEL Sub-contractor:	

Exact Location of Work:_____

Nature / Description of Work:_____

Duration of Work Execution □ From Date:_____to Date:_____Daily from _____ hrs. to _____hrs.

Name of Sub-Contractor Performing the Work: _____

Name of Sub-Contractor's Site Engineer (Permit Requesting Authority):_____Sign:_____

Name of Sub-Contractor's Package In-charge:_____Sign:_____Date:_____

The above described work will be done under all the safety precautions mentioned as under during the currency of the Permit.

N□.	I□□□	Y□□	N□□r□□□r□d □ R□□ □r□□
1.	All the persons at the site informed/removed from the area.		
2.	Area around the source of radiation cordoned off with the rope/chord.		
3.	Radiation warning symbol/boards displayed around radiography work on rope/chord.		
4.	Radiographer worn radiation badges during testing and is within safe limits.		
5.	Radiography camera and carrying case box having radiation symbol.		
6.	Radiation Survey Meter is in working condition, calibrated & within validity period.		
7.	Radiographer has valid certificate from BARC.		
8.	Blinking light provided on road during radiography (in dark hours).		
9.	Proper required Illumination provided		
10.	Safe access and working platform provided to conduct RT work		
11.	All the persons involved in Radiography work are aware of the hazard of radiation		
12.	Any other Precautions or Permits required (Height Work, Confined Space etc.), give details and attach		

D□□□r□□□□: *All the points mentioned in the above checklist have been checked and found OK*

Permit Receiver:

Site Engineer (Sub- Contractor):	
Signature:	
Name:	Designation:

Site Safety Officer (Sub-Contractor):	
Signature:	
Name:	Designation:

Permit Issuer:

Engineer of Concerned Execution Department (BHEL):	
Signature:	
Name:	Designation:

Site Safety Officer (BHEL):	
Signature:	
Name:	Designation:

Package-in-charge (BHEL):	
Signature:	
Name:	Designation:

Verified by Customer Representative (if applicable), Name: ***Sign:*** ***Date:*** ***Time:***

(* Permit valid for 7 days, subject to daily renewal, and extension as per overleaf instructions / record formats)

Radiation Work Permit No. & Date: _____

Daily Work Area Condition Endorsement

Sl. No.	Date	Signature with Date & Time		Remarks
		Agency Safety	BHEL Safety	
Day 2				
Day 3				
Day 4				
Day 5				
Day 6				
Day 7				

Permit Extension Beyond Initially Requested Hours

Sl. No.	Extension Period		Remarks	Signature with Date & Time			
	From……. (Date & Time)	To…… (Date &Time)		Agency Site Engineer	Agency Safety Officer	BHEL Site Engineer (PIA)	BHEL Safety Officer
1.							
2.							
3.							
4.							
5.							
6							

TO BE SIGNED BY THE BHEL HSE & EXECUTION AFTER THE WORK IS OVER

Permit is here by returned after completing the job & ensuring safe removal of men and material.

Site Engineer, BHEL	**Site HSE Engineer, BHEL**
Signature:	Signature:
Name:	Name:

General Instructions:

1	This Permit is required for all activities in which there is danger of exposure to harmful radiation
2	This permit must be available at the work site all the times of the work.
3	Location and description of the work must be clearly indicated by the permittee.
4	Terms applicable must be clearly indicated by the permittee.
5	This permit shall be endorsed each day after checking all the compliance jointly by the contractor and BHEL safety.
6	Permit shall be issued for not more than **7 days** including the issue date.
7	Permit shall be returned to the HSE Department of BHEL after completion of the job.
8	Before engaging anybody to work, competency and fitness to be ensured.
9	All safety precautions to be taken as per work site HSE plan.
10	**Distribution of copy:**
	Original- Permittee, Duplicate –Department HOS, Contractor, Triplicate - Site HSE Dept.,

HSEP:14-FP06

LIFTING ACTIVITY WORK PERMIT	Permit No. & Date
Project & Unit:	**Emergency Contact Nos:**
BHEL Sub-contractor:	

Exact Location of Work:_____

Nature / Description of Work:_____

Duration of Work Execution □ From Date:_____to Date:_____Daily from _____ hrs. to _____hrs.

Name of Sub-Contractor Performing the Work: _____

Name of Sub-Contractor's Site Engineer (Permit Requesting Authority):_____Sign:_____

Name of Sub-Contractor's Package In-charge:_____Sign:_____Date:_____

The above described work will be done under all the safety precautions mentioned as under during the currency of the Permit.

N□.	I□□□	Y□□	N□□r□□□r□d □ R□□ □r□□
1.	Crane used for lifting activity TPI tested, certified and approved for rated lifting		
2.	All lifting tackles, gears/appliances are tested and certified for lifting works.		
3.	Crane operator is trained and competent for lifting operation.		
4.	Lifting sling/ belt is protected against sharp edge of the jobs to be lifted.		
5.	Lifting hook is properly latched to prevent material falling over		
6.	Access and exit marked and without obstruction.		
7.	In case of lifting multiple materials at once, same are tied up with strong rope / material		
8.	Area below lifting activity barricaded to prevent movement		
9.	Minimum 2 guidelines have been provided for balancing and guiding jobs to be lifted.		
10.	Periphery area of crane booms as well as lifting job is barricaded and unauthorized/no-entry sign board posted.		
11.	Rigger and signal man is trained and competent for lifting work. Signal is clearly visible to the operator and understood		
12.	No lifting activity to be carried out during lightening, heavy wind/rain. No forecast of these conditions during work period		
13.	If scaffolding to be used during lift, scaffolding with valid tag available for use.		
14.	Add drawing /procedure etc. relevant for the lifting.		
15.	Any other Precautions or Permits required (Height Work, Confined Space etc.), give details and attach		

D□□□r□□□□: *All the points mentioned in the above checklist have been checked and found OK*

Permit Receiver:

Site Engineer (Sub- Contractor):		**Site Safety Officer (Sub-Contractor):**	
Signature:		Signature:	
Name:	Designation:	Name:	Designation:

Permit Issuer:

Engineer of Concerned Execution Department (BHEL):		**Site Safety Officer (BHEL):**	
Signature:		Signature:	
Name:	Designation:	Name:	Designation:

Package-in-charge (BHEL):	
Signature:	
Name:	Designation:

Verified by Customer Representative (if applicable), Name: _____Sign: _____Date: _____Time: _____

(* Permit valid for 7 days, subject to daily renewal, and extension as per overleaf instructions / record formats)

Lifting Activity Work Permit No. & Date: _____

Daily Work Area Condition Endorsement

Sl. No.	Date	Signature with Date & Time		Remarks
		Agency Safety	BHEL Safety	
Day 2				
Day 3				
Day 4				
Day 5				
Day 6				
Day 7				

Permit Extension Beyond Initially Requested Hours

Sl. No.	Extension Period		Remarks	Signature with Date & Time			
	From……. (Date & Time)	To…… (Date &Time)		Agency Site Engineer	Agency Safety Officer	BHEL Site Engineer (PIA)	BHEL Safety Officer
1.							
2.							
3.							
4.							
5.							
6							

TO BE SIGNED BY THE BHEL HSE & EXECUTION AFTER THE WORK IS OVER	
Permit is here by returned after completing the job & ensuring safe removal of men and material.	
Site Engineer, BHEL	**Site HSE Engineer, BHEL**
Signature:	Signature:
Name:	Name:

General Instructions:

1	This Permit is required for all Heavy Lifting Activities that are either / all of the following: 1. Above 50 Tons; 2. Tandem Lifting; 3. Total Load exceeding 75%of capacity of crane; 4. Lift of unusual difficulty or geometry or rigging; 5. Lift over operating Units; 6. Any other Lift as decided by Site HSE / Erection
2	Job Safety Analysis (**JSA**) to be created for every Lift above 5 Tons.
3	This permit must be available at the work site all the times of the work.
4	Location and description of the work, and terms applicable must be clearly indicated by the permittee.
5	This permit shall be endorsed each day after checking all the compliance jointly by the contractor and BHEL safety.
6	Permit shall be issued for not more than **7 days** including the issue date.
7	Permit shall be returned to the HSE Department of BHEL after completion of the job.
8	Before engaging anybody to work, competency and fitness to be ensured.
9	All safety precautions to be taken as per work site HSE plan.
10	**Distribution of copy:** Original- Permittee, Duplicate –Department HOS, Contractor, Triplicate - Site HSE Dept.

HSEP:14-FP07

LOCKOUT/TAGOUT *(LIVE ELECTRICAL MAINTENANCE)* WORK PERMIT	Permit No. & Date
Project & Unit:	**Emergency Contact Nos:**
BHEL Sub-contractor:	

Exact Location of Work:_____

Nature / Description of Work:_____

Duration of Work Execution □ From Date:_____to Date: _____Daily from _____ hrs. to _____hrs.

Name of Sub-Contractor Performing the Work: _____

Name of Sub-Contractor's Site Engineer (Permit Requesting Authority):_____Sign:_____

Name of Sub-Contractor's Package In-charge:_____Sign:_____Date:_____

The above described work will be done under all the safety precautions mentioned as under during the currency of the Permit.

Tag No.	Device to be Tagged / Locked I.D. No.	Device Location	Device Position *OPEN / CLOSED - ON/OFF*	Lock No.	Tag Lock Placed by Name/Sign - Date/Time		Tag / Lock Removed by Name/Sign - Date/Time	

D□□□r□□□□: *All the points mentioned in the above checklist have been checked and found OK*

Permit Receiver:

Site Engineer (Sub- Contractor):	
Signature:	
Name:	Designation:

Site Safety Officer (Sub-Contractor):	
Signature:	
Name:	Designation:

Permit Issuer:

Engineer of Concerned Execution Department (BHEL):	
Signature:	
Name:	Designation:

Site Safety Officer (BHEL):	
Signature:	
Name:	Designation:

Package-in-charge (BHEL):	
Signature:	
Name:	Designation:

Verified by Customer Representative (if applicable), Name: _____***Sign:*** _____***Date:*** _____***Time:*** _____

(* Permit valid for 7 days, subject to daily renewal, and extension as per overleaf instructions / record formats)

Lockout/Tagout Work Permit No. & Date: _____

Daily Work Area Condition Endorsement

Sl. No.	Date	Signature with Date & Time		Remarks
		Agency Safety	BHEL Safety	
Day 2				
Day 3				
Day 4				
Day 5				
Day 6				
Day 7				

Permit Extension Beyond Initially Requested Hours

Sl. No.	Extension Period		Remarks	Signature with Date & Time			
	From……. (Date & Time)	To…… (Date &Time)		Agency Site Engineer	Agency Safety Officer	BHEL Site Engineer (PIA)	BHEL Safety Officer
1.							
2.							
3.							
4.							
5.							
6							

TO BE SIGNED BY THE BHEL HSE & EXECUTION AFTER THE WORK IS OVER

Permit is here by returned after completing the job & ensuring safe removal of men and material.

Site Engineer, BHEL	**Site HSE Engineer, BHEL**
Signature:	Signature:
Name:	Name:

General Instructions:

1	This Permit is required for all maintenance and erection activities with danger of electrocution from Live Electric Power
2	This permit must be available at the work site all the times of the work.
3	Location and description of the work, and terms applicable must be clearly indicated by the permittee.
4	This permit shall be endorsed each day after checking all the compliance jointly by the contractor and BHEL safety.
5	Permit shall be issued for not more than **7 days** including the issue date.
6	Permit shall be returned to the HSE Department of BHEL after completion of the job.
7	Before engaging anybody to work, competency and fitness to be ensured.
8	All safety precautions to be taken as per work site HSE plan.
9	**Distribution of copy:** Original- Permittee, Duplicate –Department HOS, Contractor, Triplicate - Site HSE Dept.

	POWER SECTOR	FORMAT NO: **HSEP:14-F01** REV NO.: 00 PAGE NO. 01 OF 02
	Inspection of First Aid Box	

Name of Site :	
Name of Sub-Contractor:	
Inspected by :	
Date of Inspection:	

Number of employees in the site: -_____

Sl. No.	Item	No. Available	Remarks
1	No. of small sterilized dressings		
2	No of medium sized sterilized dressings		
3	No of large sized sterilized dressings.		
4	No of large sized sterilized burn dressings		
5	No of (15 grams) packets sterilized cotton wool		
6	No of pieces of sterilized eye pads in separate sealed packets.		
7	No of roller bandages 10 cm wide.		
8	No of roller bandages 5 cm wide.		
9	Whether tourniquet available		
10	Whether supply of suitable splints available.		
11	No of packets of safety pins.		
12	Whether kidney tray available		
13	Whether sufficient number of eye wash bottles, filled with distilled water or suitable liquid, clearly indicated by a distinctive sign which shall be visible at all times, available.		
14	Whether 4%-xylocaine eye drops, and boric acid eye drops and soda by carbonate eye drops available.		
15	Whether (60ml) bottle containing a two percent alcoholic solution of iodine available		
16	Whether (two hundred ml) bottle of mercurochrome (2 per cent) solution in water available.		
17	Whether 120ml bottle containing Sal volatile having the dose and mode of administration indicated on the label,		
18	Whether roll of adhesive plaster (6 cm X 1 meter) available		

Sl. No.	Item	No. Available	Remarks
19	No of rolls of adhesive plaster (2 cm X 1 meter)		
20	Whether snake bite lancet available.		
21	Whether (30 grams) bottle of potassium permanganate crystals available.		
22	Whether a pair scissors available		
23	Whether copy of the First-Aid leaflet issued by the Director-General, Factory Advice service and labor Institutes, Government of India available.		
24	Whether bottle containing 100 tablets (each of 5 grains) of aspirin available		
25	Whether Ointment for burns available		
26	Whether bottle of a suitable surgical anti-septic solution available		
27	Whether List of Contents pasted on First Aid Box along with respective expiry dates		

Signature of Subcontractor's Site I/C **Date:**

	POWER SECTOR	FORMAT NO: **HSEP:14-F02** REV NO.: 00 PAGE NO. 01 OF 02
	Health Check-Up	

Name of Site :	
Name of Sub-Contractor:	
Name of Employee :	
Age:	

History Of Past Illness	H/O Epilepsy:
	H/O Drug Allergy:
	H/O Diabetics/ Hypertension:
	H/O Unconsciousness:
Personal History	

EXAMINATION	**OBSERVATION**	
General Physical Examination		
Height		
Weight		
BMI		
Built And nourishment		
Pallor		
Temperature		
Chest Expansion	Inspiration	Expansion
Lymph Node Enlargement		
Upper Limbs Strength & Function		
Lower Limbs Strength & function		
Spine Adequately flexible for the job concerned (Yes/No)		
Mental alertness and stability with good eye, hand and foot co-ordination.		
Ear, Nose, Throat		
Ear / Hearing		
Nose		
Throat		
Vision		
Left Eye	Right Eye	

EXAMINATION	OBSERVATION	
Cardiovascular System Examination		
Inspection		
Palpation	Pulse	BP
Auscultation (Heart Sounds)		
Respiratory System		
Inspection	Respiratory Rate	
Palpation:		
Percussion		
Auscultation (Breath Sounds)		
Examination of Abdomen		
Inspection		
Palpation		
Auscultation (Bowel Sounds)		
Any Other		
Clinical Impression		

Signature of the examining doctor **Date:**

	POWER SECTOR	FORMAT NO: **HSEP:14-F03** REV NO.: 02 PAGE NO. 01 OF 01
	HSE Induction / Regular / On-the-Job Training Records	

Name of Site :						
Name of Sub-Contractor :						
Date of Training (dd/mm/yyyy) :		**Duration (Hrs)**				
		From		**To**		
Name & Details of Trainer:						
Subject of Training	**Induction**		**On-The-Job Training (Give details)**			
Name of Training Co-ordinator:						

Sl. No.	Name	Designation	Organization	Signature

I certify that Training has been carried out as per HSEP04: HSE Procedure for Training & Awareness

Signature of Training Coordinator **Date:**

	POWER SECTOR	FORMAT NO: **HSEP:14-F04** REV NO.: 00 PAGE NO. 01 OF 01
	Toolbox Talk	

Name of Site :	
Sub-Contractors Name :	
Date :	

Topic	**Name of person delivered Tool Box Talk**	**No. of Participants attended**	**Remarks**

Signature of Site I/C of Subcontractor **Date:**

Name of subcontractor:	**Report Month:**

A) Accidents/Incidents Details: -

a	**Lost time in Accidents**	**No. of incidents**	**Man Hours Lost**	**No. of People Involved**	**No. of person reported to Govt.**		
	For the Month						
	Cumulative						
b	**Minor Injuries**						
	For the Month						
	Cumulative						
c	**Fires**	**No. of Near-Misses**	**No. of First- Aid cases**	**No. of persons injured**	**No. of equipment damaged**	**No. of Fire reported Outside**	
	For the Month						
	Cumulative						
d	**Other mishaps not covered in a, b, c.**	**No. of Near-Misses**	**No. of First- Aid cases**	**No. of persons injured**	**No. of equipment damaged**	**Total near misses and First-Aid**	
	For the Month						
	Cumulative						

B) Data for Man-hours worked:

Details	**Value**	**Remarks if any**
No. of people		
Man Hours worked		
O.T. Hours		
Total Man Hours		
Grand Total of man hours worked during the month(A+B)		
Cumulative man-hours (from_____to_____): (Since commencing of operations)		

Signature of Subcontractor Site In-charge **Signature of Subcontractor HSE Officer**

C) Status of Deployment of Work force, Safety Officers/Supervisors & Construction Medical Officer(s) & Electricians:

Description	Name	Qualification & Experience
Safety Officers		
Safety Supervisors		
Construction Medical Officer		
Nursing Staff.		
Electricians		
Scaffolding Inspectors		
T&P Inspectors		

D) Status of deployment of manpower for critical HSE activities:

(All height work and other hazardous activities to be actively supervised by trained personnel. Area to be divided in manageable sections to ensure effective supervision at all times. For example, multiple elevations in a structure can be divided among multiple supervisors)

Activity	Location	Shift Timings	Personnel deployed	Remarks
Height Work	Boiler Unit- (Level 1-3)			
	Boiler Unit- (Level 4-6)			
	ESP			
Housekeeping	Boiler Unit-			
	ESP Unit			
Others				

Signature of Subcontractor Site In-charge **Signature of Subcontractor HSE Officer**

E) Lifting Tools, Tackles, Equipment and Pressure Vessels:

Item	Nos. Deployed	Nos. Tested by competent person	Identification Nos. (Comma separated) (A)	Validities of Test Certificates (Comma separated – corresponding to column A)	Whether internal testing using Color Coding or similar system done
Winches					
Chain Blocks					
Wire Rope Slings					
Man Cages					
D-Shackles					
Air Compressors					
Crawler Cranes					
Mobile Cranes					
Hydra Cranes					
Hydraulic Jack					
Others					

F) Reverse Horns in Construction Vehicles:

Item	Nos. Deployed with serial numbers (Comma separated) (A)	Nos. Having Functional reverse horns	Inspection Dates (Comma separated corresponding to column A)
Transit Mixers			
Hydra Cranes			
Dumpers/Trippers			
Backhoes			
Other Vehicles			

G) ELCBs:

No. Of ELCBs provided with Serial Nos. (Comma separated) (A)	Nos. Functional	When They were last Tested (Comma separated corresponding to column A)

H) Electrical Earthing:

No. Of Earth resources with serial numbers and locations (Comma separated) (A)	Whether Double Earthing provided to all equipment	When they were last tested (Comma separated corresponding to column A)

I) Fire Extinguishers

Name & designation of person responsible for maintenance of Extinguishers at different locations :(Individual subcontractor's Safety Officers).

A. FIRE EXITINGUISHERS AT ERECTION SITE:

Type (Add more rows if required)	Sizes	Qty + Serial numbers (Comma separated) (A)	Healthiness – Last checked dates (Comma separated corresponding to column A)	Locations (Comma separated corresponding to column A)
FOAM TYPE				
SODA TYPE				
DRY TYPE (DCP)				
C02 TYPE				

B. FIRE EXTINGUISHERS AT SITE OFFICES & STORES:

Type	Size (Add more rows if required)	Qty + Serial numbers (Comma separated) (A)	Healthiness – Last checked dates (Comma separated corresponding to column A)	Locations (Comma separated corresponding to column A)
FOAM TYPE				
SODA TYPE				
DRY TYPE (DCP)				
C02 TYPE				

J) Tie-Ups with Emergency Services

Service (Add more rows if required)	Name, location & distance from site	Emergency contact details	Remarks
Hospital with ICU and facilities for orthopedic, neurological etc. trauma			
Fire services			
Others:			

Signature of Subcontractor Site In-charge **Signature of Subcontractor HSE Officer**

K) Implementation of Checklist, Work Permits:

Item	Numbers During the Month	Major Deviations
Note:- Please attach photocopies of all filled Checklists & Work permits for that month.		

L) Personal Protective Equipment Issued (Extend table for each subcontractor):

Item	Issued this Month	Nos. Issued up to the Month	Percentage of usage at Site (as per physical verification)
Name of subcontractor:			
Safety Helmet			
Safety Shoes			
Full Body Harness			
Fall Arrestor			
Safety Nets			
Hand Gloves			
Face shield			
Welder shield			
Nose Mask			
Reflective Jacket			
Other PPEs.			

M) Safety Observations by Subcontractor Executives- Observations package wise:

Topic	Date Of Programme	No. Of Participants	Level Of Participants

- **Tool-Box talks on Safety:**

Date	Tool Box Talk - No of Participants	Topic	Remarks

- **Safety Induction Trainings:**

Date	Safety Induction No. of Participants	Topic	Remarks

Signature of Subcontractor Site In-charge **Signature of Subcontractor HSE Officer**

N) Progress of Management Programmes at Site

SL	Description Of MPs	Annual Plan	Achievement In This Month	Cumulative Achievement
A. Environment Improvement Programme				
1	Plantation of Trees			
2	Installation of Scrap Bins			
3	Chemical Storage & Handling system			
B. Improvement of Working Environment				
4	Increasing LTI free days			
5	Air Quality Monitoring			
6	Water Quality Monitoring			
7	Illumination level Monitoring			

O) HR Information:

Designation	Total No. Inducted	Total no. of Induction Balance	Total no. of Gate Pass Issued	Total no. of Gate Pass Balance	Total no. of Gate Pass Cancelled	Medical Checkup Completed	Medical Checkup Balance

P) Rewards on Account of Good Safety Performance

Serial Number	Reward Issued to	Details of Reward Issued (Amount etc.)	Brief Reason
Note: Photos of Reward Functions to be attached			

Q) Other Safety initiatives / Safety Activities conducted (with photos, if any):

Signature of Subcontractor Site In-charge **Signature of Subcontractor HSE Officer**

	POWER SECTOR	FORMAT NO: **HSEP:14-F06** REV NO.: 00 PAGE NO. 01 OF 01
	Personal Protective Equipment Inspection	

Name of Site :	
Name of Sub-Contractor :	
Inspected by :	
Date of Inspection:	

Item	Total Checked	Numbers Found in Order	Remarks
Safety Helmet			
Safety Shoes			
Full Body Harness			
Fall Arrestor			
Safety Nets			
Hand Gloves			
Face shield			
Welder shield			
Nose Mask			
Reflective Jacket			
Other PPEs (Specify)			

Signature of Site I/C of Subcontractor: **Date:**

BHEL	**POWER SECTOR** **Format for Register of Issue and Receipt of PPEs**	FORMAT NO: **HSEP:14-F06** REV NO.: 00 PAGE NO. 01 OF 1

Site:

Subcontractor:

S.N	N□□ □ □□ P□r□□□	D□□□□□□ □□PPE(□) I□□□□d (□ □□□ S□r□□□N□□ □□r□)	D□□□ I□□□□d	Receiver's S□□□□□r□	Issuer's Name □ D□□□□□□□□□□	PPE'□ □□r□□□d OK □ R□□ □r□□	Issuer's S□□□□□r□

	POWER SECTOR	FORMAT NO: **HSEP:14-F07** REV NO.: 00 PAGE NO. 01 OF 01
	Inspection Of T&Ps	

Name of Site :	
Name of Sub-Contractor :	
Date of Inspection :	

Sl.No.	**Description**		**Remarks**
1.0	Name of equipment		
2.0	Basic Information of equipment		
2.1	Specification		
2.2	Sr. No. of equipment		
2.3	Make		
2.4	Year of manufacture		
3.0	Major repairs / overhauls(Furnish details of work carried out)		Date(s) of major repair/overhaul
3.1			
3.2			
3.3	Repairs carried out at site		
4.0	Any performance test conducted	Yes/No	
5.0	Document Submitted	Yes/No	
6.0	Manufacturer's test / guarantee certificate	Available/ Not available	
7.0	Performance test	Done/ Not Done	
8.0	Acceptance Norms		
9.0	Committee Observations		
10.0	Date of next review (if accepted)		

Signature-Subcontractor HSE Officer	**Signature-Subcontractor Site In-charge**

	POWER SECTOR	FORMAT NO: **HSEP:14-F08** REV NO.: 00 PAGE NO. 01 OF 01
	Inspection Of Cranes	

Name of Site :	
Name of Sub-Contractor :	
Inspected by :	
Date of Inspection:	

Crane Reg. No (Make/Model) _____

Name of Driver/Operator _____

Sl.no.	Description	Observation	Measures
1	Valid Driving license		
2	Hook & Hook Latch		
3	Over Hoist limit switch		
4	Boom limit switch		
5	Boom Angle Indicator		
6	Boom limit cutoff switch		
7	Condition of Boom		
8	Condition of ropes		
9	Number of load lines		
10	Size and condition of the slings		
11	Stability of the cranes		
12	Soil Condition		
13	Swing Break And Lock		
14	Proper Break And Lock		
15	Hoist Break And Lock		
16	Boom Break And Lock		
17	Main Clutch		
18	Leakage in Hydraulic Cylinders		
19	Out riggers filly extendable		
20	Tyre pressure		
21	Condition of Battery And Lamps		
22	Guards of moving and rotating parts		
23	Load chart provided		
24	Number and position of pedant ropes		
25	Reverse Horn		
26	Load Test Details		
27	Operator's fitness		
28	Pollution under control certificate		
29	Fire extinguisher of appropriate type.		
30	Training of the operator		

Signature of Site I/C of Subcontractor: **Date:**

	POWER SECTOR	FORMAT NO: **HSEP:14-F09** REV NO.: 00 PAGE NO. 01 OF 01
	Inspection Of Winches	

Name of Site :	
Name of Sub-Contractor :	
Inspected by :	
Date of Inspection:	

Winch Reg. No (Make/Model) _____

Name of Operator _____

Sl. No.	Description	YES	NO	NA	Remarks
1	Has the copy of Third Party Inspection certificate been provided in winch machine shed?				
2	Is safe operating instructions displayed near winch?				
3	Is winch machine operator experienced enough to operate the winch machine?				
4	Is the winch machine operated by someone other than the winch machine operator?				
5	Is there guard provided in all moving parts like wheel and motor's shaft?				
6	Will it protect against unforeseen operational contingencies?				
7	Are brakes, clutch and locking arrangement working properly?				
8	Has it been ensured that the guard does not constitute a hazard by itself?				
9	Are the cranks and the connecting rods protected by guardrails?				
10	Is there provision for fully covered shed with wooden plank roof?				
11	Is wire rope free from any kind of damage or wear and tear?				
12	Is split pin provided for the protection of clutch and brake locking arrangement?				
13	Is pulley inspected by competent person and certified before use?				
14	Is pulley free from any wear and tear visually?				
15	Is winch rope barricaded with clipsheet for the protection of rope and person?				
16	Is the wire rope lubricated by cardium oil?				
17	Is there any friction in wire rope which may damage the wire rope rather than the rolling parts?				
18	Is there any oil leakage in the hydraulic system of the winch machine?				
19	Has it been ensured that the guard will not cause discomfort or inconvenience to operator?				
Total NO		**Total NA**		**% Compliance**	

Signature of Site I/C of Subcontractor: **Date:**

	POWER SECTOR	FORMAT NO: **HSEP:14-F10** REV NO.: 00 PAGE NO. 01 OF 2
	Inspection of Height Working	

Name of Site :	
Name of Sub-Contractor :	
Inspected by :	
Date of Inspection:	

Sl. No.	Descriptions	Observation (Yes/No)	Remarks
	A. General		
1	All the workers have been explained safe work method?		
2	Adequate illumination has been ensured.		
3	Work area inspected prior to the start of the work.		
4	Is the work area barricaded to prevent fall and platforms are of adequate strength (bamboo, jute / plastic ropes not to be used).		
5	The temporary work platforms & structures for height work including those used in Boiler structures, water walls, ESP, Powerhouse are fully barricaded with railings (as per **IS 3696**)		
6	Fabricated makeshift arrangements are checked for quality and type of material welding, anchoring etc.		
7	Are floor gaps, permanently covered and barricaded		
8	Area below the work place barricaded, particularly below hot work.		
9	Workers provided with bags /box to carry bolts, nuts and hand tools		
10	Arrangement for fastening hand tools made.		
11	All work platforms ensured to be of adequate strength and ergonomically suitable.		
12	Work at more than one elevation at the same segment is restricted.		
13	An established communication system has been established and explained to the workers.		
	B. **Access/Egress**		
1	Walkways provided with handrail, mid-rail and toe guard?		
2	All checkered plates, gratings properly welded/ bolted?		
3	Are ladders inspected and they are in good condition?		
4	Are ladders spliced?		
5	Are ladders properly secured to prevent slipping, sliding or falling?		
6	Stairs erected above and below 1 tier column for safe access?		
7	Do side rails extend 36” above top landing?		

Sl. No.	Descriptions	Observation (Yes/No)	Remarks
8	Are built up ladders constructed of sound materials?		
9	Are rugs and cleats not over 12" on center?		
10	Metal ladders not used around electrical hazards.		
11	Proper maintenance and storage.		
12	Ladders placed at right slope.		
13	Ladders / staircases welded/ bolted properly.		
14	Any obstruction in the stairs.		
15	Are landing provided with handrails, knee rails, toe boards etc.?		
16	Whether ramp is provided with proper slope.		
17	Proper hand rails / guards provided in ramps.		
	C. **Housekeeping**		
1	Walkways, aisles & all overhead workplaces cleared of loose material.		
2	Is any nut bolt/scrap left on beam/column?		
3	Flammable materials, if any, are cleared.		
4	All the de shuttering materials are removed after de shuttering is done.		
5	Platforms and walkways free from oil/grease or other slippery material.		
6	Collected scrap are brought down or lowered down and not dropped from height.		
	D. **PPE And Safety Devices**		
1	Use of safety helmet, safety belts ensured for all workers		
2	Anchoring points provided at all places of work.		
3	Common lifeline provided wherever linear movement at height is required.		
4	Safety nets are use wherever required.		
5	Proper fall arrest system is deployed at critical workplaces.		
6	Crawler boards/Safety system or works on fragile roof are used.		
7	Is man-lift being used for personnel lifting?		
8	Does man basket / personnel lift system has an independent lifeline and all occupants safety harnesses connected to it with rope grab?		

Signature of Site I/C of Subcontractor: **Date:**

	POWER SECTOR	FORMAT NO: **HSEP:14-F11** REV NO.: 00 PAGE NO. 01 OF 02
	Inspection of Welding and Gas Cutting	

Name of Site :	
Name of Sub-Contractor :	
Inspected by :	
Date of Inspection :	

Welding				
Sl.no.	Description	Yes	No	Remarks
1	Is electric connection given through 30 mA ELCB/RCCB to welding m/c?			
2	Is welding machine more than 10 years old?			
3	Is there provision of fuse and is it bypassed?			
4	Is electric cable fitted properly in junction box on m/c?			
5	Is electrical cable free from joints?			
6	Are the joints attached firmly & insulated with tape?			
7	Is double earthing given to body of m/c?			
8	Is the physical condition of the m/c good?			
9	Is ON/OFF switch connected to the m/c is working and in good condition?			
10	Are indication lamps on m/c working?			
11	Is the electrode holder in good condition?			
12	Are the cables of the welding m/c lugged & tight properly?			
13	Is cable to welding machine terminal joint lose / burnt / glowing?			
14	Are return lead connected properly (Rod, Angle, Channels shall not be used)			
	Total No of NO			
	Total No of YES			

Signature of Site I/C of Subcontractor: **Date:**

	POWER SECTOR	FORMAT NO: **HSEP:14-F11** REV NO.: 00 PAGE NO. 02 OF 02
	Inspection of Welding and Gas Cutting	

Gas Cutting				
Sl.no	Description	Yes	No	Remarks
1	Are Cylinders kept on trolleys?			
2	Physical condition of Gas cylinders Good?			
3	Is there Oil/Grease on valve of the cylinder?			
4	Are pressure regulators in good condition?			
5	Condition of hose pipe OK?			
6	Are hose pipe clamped with hose clip?			
7	Is flash back arrestor & NRV fitted on torch both for O2 and LPG cylinder?			
8	Is nozzle of the torch cleaned?			
	Total Number of NO			
	Total No of YES			
	% Compliance			

Signature of Site I/C of Subcontractor: **Date:**

	POWER SECTOR **Inspection Of Electrical Installation**	FORMAT NO: **HSEP:14-F12** REV NO.: 00 PAGE NO. 01 OF 02

Name of Site :	
Name of Sub-Contractor :	
Inspected by :	
Date of Inspection :	

Sr. No.	Contents	Yes/No	Remarks
A	**Cable**		
1.	Whether the condition of cable is checked?		
2.	Are cables received from other sites checked for insulation resistance before putting them into use?		
3.	Are all main cables taken either underground / overhead?		
4.	Are welding cables routed properly above the ground?		
5.	Are welding and electrical cables overlapping?		
6.	Is any improper joining of cables/wires prevailing at site?		
B	**DBs/SDBs**		
1.	Is earth conductor continued up to DB / SDB?		
2.	Whether DBs and extension boards are protected from rain / water?		
3.	Whether DB and extension board have separate MCB/ELCB		
4.	Is there any overloading of DBs / SDBs?		
5.	Are correct / proper fuses & CBs provided at main boards and sub-boards?		
6.	Is energized wiring in junction boxes, CB panels & similar places covered all times?		
C	**ELCB**		
1.	Whether the connections to all equipment are routed through individual ELCBs?		
2.	Is sensitivity of each ELCB maintained at 30 mA?		

Sr. No.	Contents	Yes/No	Remarks
3.	Are the ELCB numbered and tested periodically & test results recorded in a logbook countersigned by a competent person?		
D	**Grounding**		
1.	Is natural earthing ensured at the source of power (main DB at Generator or Transformer)?		
2.	Whether the continuity and tightness of the earth conductor are checked?		
3.	Mention the gauge of the earth conductor used at the site.		
4.	Mention the value of Earth Resistance.		
E	**Electrically operated Machines or Accessories.**		
1.	Whether the plug top is provided everywhere.		
2.	Are all metal parts of electrical equipment and light fittings / accessories grounded / double earthed?		
3.	Is there any shed or cover for welding machines?		
4.	Are halogen lamps fixed at proper places?		
5.	Are portable power tools maintained as per norms?		
6.	Any other information:		

Signature of Site I/C of Subcontractor: **Date:**

	POWER SECTOR	FORMAT NO: **HSEP:14-F13**
	Inspection of Elevator	REV NO.: 00 PAGE NO. 01 OF 01

Name of Site :	
Name of Sub-Contractor :	
Inspected by :	
Date of Inspection :	

Sr. No.	**Description**	**Remarks**
1.0	Name of equipment	
2.0	Basic Information of equipment	
2.1	Specification	
2.2	Sr. No. of equipment	
2.3	Make	
2.4	Year of manufacture	
3.0	Major repairs/overhauls(Furnish details of work carried out)	Date(s) of major repair/overhaul
3.1		
3.2		
3.3	Repairs carried out at site	
4.0	Any performance test conducted	Yes/No
5.0	Document Submitted	Yes/No
6.0	Manufacturer's test / guarantee certificate	Available/ Not available
7.0	Performance test	Done/ Not Done
8.0	Acceptance Norms	
9.0	Committee Observations	
10.0	Date of next review (if accepted)	

Signature-Subcontractor/ Subcontractor's Safety Officer **Signature-Site Safety Officer (BHEL)**

Sub: MEMO for Penalty for non-compliances in Safety and Fabrication Quality requirement

Following lapse (tick marked) was observed and penalty is imposed as stated at the bottom of this memo. It is requested that such occurrences may please be avoided in future.

S. No	Nature of Non - Compliance	Penalty (in Rs.)	Remarks
	A. PPEs		
1.	Not wearing safety helmet / wearing without chin straps	500	Per Person/ day
2.	Not Wearing safety shoes	500	Per Person/ day
3.	Not wearing gloves, nose masks where required	350	Per Person/ day
4.	Not using grinding goggles while doing grinding operations	500	Per Person/ day
	B. Height Work		
1.	Not providing Lifelines for height work	1000	Per location per day
2.	Not ensuring barricading of working platforms	1000	Per location per day
3.	Not using temporary platform during work at height	1000	Per case per day
4.	Not wearing safety belt while working at height (> 2 meters) or not anchoring to lifeline	2000	Per Person/ day
5.	Not providing proper barricades (caution tape at 2 elevations)	500	Per location per day
	Use of mobile phones by Height worker / Crane / Hydra Operator	1000	Per case per day
	C. Electrical		
1.	Not using 24 V supply for lighting in confined spaces	500	Per case per day
2.	Lack of Electrical Earthing	2000	Per case per day
3.	Improper earthing of welding & Other electrical Machines. Earth resistance not OK	500	Per Machine per incidence
4.	Electrical plug not used for connection/ hand machines	500	Per connection per incidence
5.	Unsafe electrical practice like not installing ELCB/ RCCB	500	Per case per day
6.	Using frayed/ broken welding cables	500	Per machine per week
	D. Lifting		
1.	Use of lifting equipment without having valid Third Party Test certificate	5000	Per equipment per seven days
2.	Lifting hooks without latches	500	Per hook per day
3.	Using damaged slings or not slinging properly	2000	Per event Per T&P
4.	Lifting cylinders without cage or rolling of cylinders	500	Per Event per incidence
5.	Non removal of scrap from platforms	1000	**Per Event Per location per 7 days**
	E. Hot Work / Cylinder Handling		
20.	Gas cutting without flash back arrestor	2000	Per machine per incidence
21.	Gas cutting at height without sheet below	500	Per event
22.	Not keeping gas cylinders vertically / in trolley on ground	500	Per event
23.	Gas cutting with damaged hose pipes	500	Per event
	Not covering welding cylinder with top cover	500	Per event
	F. Construction Vehicles		
24.	Not having valid driving license for the type of vehicle/ T&P	2000	Per driver per event
25.	Two wheeler entry in construction area	500	Per vehicle
26.	Using Hydra for material movement at site in unsafe manner	1000	Per case
27.	Using Two Hydra in Tandem for material movement	2000	Per case
28.	Vehicles, Hydras, Cranes, Dumpers and Earth Movers not having automatic back horns linked to gear	1000	Per Equipment per day
29.	Not using guide rope while moving material using Hydra or Crane	1000	Per event
30.	Violating speed limit during vehicle movement	1000	Per event

	Nature of Non - Compliance	Penalty in Rs.)	Remarks
Engineering / Administrative Controls / General			
31.	Major Accident – Victim not reporting for work within 48 hours – resulting in partial loss in earning capacity & termination / demotion in employment	200000	
32.	Fatal Accident/Accidents Resulting in total Loss in Earning Capacity #	500000	Per victim#
33.	Unsafe Act in violation of standards / clauses of this document	500-5000	Per case
34.	Activity carried out without safety work permit where applicable	2000	Per person per event
35.	Using untrained / unqualified personnel for hazardous work	2000	Per event
36.	Not maintaining proper hygiene in canteen as per BOCW	1000	Per event

 # or as deducted by customer, whichever is higher.

For repeated □ □□r □□d fatal incidents under the same subcontractor for the same package in the same Unit, the subcontractor will pay 2 times the penalty compared to previously paid

Details (if any) related to non- compliance (Name of persons, Nature of deficiency, etc.)

Penalty imposed: _____

1, Rate as per above chart_____

2. No. of Persons/ machine/ event/ labor_____

3. Total Penalty= 1. X 2. =_____

BHEL Personnel:

Signatures:

Name_____

Attachments: Photographs & Documentary proof (if available) for violation

Distribution: 1 Copy: to Sub- contractor Site In-charge,
1 Copy to Site Construction Manager (BHEL)

	POWER SECTOR **Format for Initial Verification of PPE's & Lifting Tools & Tackles**	FORMAT NO: **HSEP:14-F15** REV NO.: 00 PAGE NO. 01 OF 1

Name of Site :	
Name of Sub-Contractor :	
Inspected by :	
Date of Inspection :	

S. No	Particulars (Serial Number, make, model of PPE, T&P)	Accepted / Rejected	Remarks

	POWER SECTOR	FORMAT NO: **HSEP:14-F16** REV NO.: 00 PAGE NO. 01 OF 1
	Format for Inspection of Labor Colony	

Name of Site :	
Name of Sub-Contractor :	
Inspected by :	
Date of Inspection :	

S. No	Particulars	No	Yes	Comments
1	Sufficient living space ensured for each occupant with Kitchen area			
2	Area cleanliness ensured through regular cleaning			
3	Toilet facility sufficient for all occupants available, in order with adequate lighting, cleaned regularly and in hygienic condition			
4	Washing facilities available with adequate water supply			
5	Availability of sufficient drinking water in protected tanks with weekly tank cleaning and source tested annually as per IS10500 ensured			
6	Adequate drainage to remove waste and rain water, no flooding			
7	"Unsafe for Drinking" posted near accessible non-potable water and sources; posted in language of occupants or universal symbol			
8	Prevention of mosquitoes, flies, and rodents in immediate housing area through insecticide sprays if required			
9	Electricity provided & electrical connections safety ensured			
10	Fans, Coolers / Quilts, Heaters provided as required to cater to weather conditions along with adequate electricity supply			
11	Houses Walls and roof tight and solid; floors rigid and durable, with smooth, cleanable finish in good repair			
12	Availability of nominal rate ration / common use items shop within / nearby the colony			
13	Emergency medical plan developed: (A) Potential injuries determined (B) Local EMS response determined (C) Qualified first-aid person on site, if required			
14	Emergency plans posted where employees gather			
15	Transportation to nearest suitable facility			
Any other checks:				
Remarks:		**Name & Sign. Of Subcontractor** **HSE Officer**		

	POWER SECTOR **Format for Recording of First Aid Injuries**	FORMAT NO: **HSEP:14-F17** REV NO.: 00 PAGE NO. 01 OF 1

Name of Site:

Name of Subcontractor:

Date:	Time:	Name of patient:	Subcontractor	Description of injury:	How the injury occurred:	Treatment provided:	First Aider Name:	Initials:	Reportable: Yes/No

	POWER SECTOR **Format for Maintaining Records of E-waste Handled / Generated**	FORMAT NO: **HSEP:14-F18** REV NO.: 00 PAGE NO. 01 OF 1

(G□□□r□□□d Q□□□□□□□ □□ M□r□□ T□□□ (MT) □□r □□□r)

Site		
Subcontractor		
Date		
Types & Quantity of e-waste handled/generated**	Category	Quantity
	Item Description	
Types & Quantity of e-waste stored	Category	Quantity
	Item Description	
Types & Quantity of e-waste sent to collection center authorized by producer/dismantler/recycler/refurbisher or authorized dismantler/ recycler or refurbisher **	Category	Quantity
	Item Description	
Types & Quantity of e-waste transported*	Category	Quantity
	Item Description	
Name, address and contact details of the destination		
Types & Quantity of e-waste refurbished*	Category	Quantity
	Item Description	
Name, address and contact details of the destination of refurbished materials		
Types & Quantity of e-waste dismantled*	Category	Quantity
Name, address and contact details of the destination	Item Description	
Types & Quantity of e-waste recycled*	Category	Quantity
Types & Quantity of materials recovered	Item Description	
	Quantity	
Name, address and contact details of the destination		
Types & Quantity of e-waste sent to recyclers by dismantlers	Category	Quantity
	Item Description	
Name, address and contact details of the destination		
Types and Quantity of other waste sent to respective recyclers by dismantlers / recyclers of e-waste	Category	Quantity
Name, address and contact details of the destination	Item Description	
Types and Quantity of e-waste treated & disposed	Category	Quantity
	Item Description	
Name, address and contact details of the destination		

S□□□□□r□ □□S□□□□□□r□□□□r S□□□ I□-□□□r□□: **D□□□**

	POWER SECTOR **Format for Maintaining Records of Hazardous Waste at the Facility**	FORMAT NO: **HSEP:14-F19** REV NO.: 00 PAGE NO. 01 OF 1

1. Name of Site:
2. Name of the Subcontractor:
3. Date:
4. Description of hazardous waste:

Physical form with description	Chemical form	Total volume and weight (in kg.)

5. Description of storage and treatment of hazardous waste:

Date	Method of storage of hazardous wastes	Date	Method of treatment of hazardous wastes

6. Details of transportation of hazardous waste:

Name & address of consignee of package	Mode of packing/of the waste for transportation	Mode of transportation to site of disposal	Date of transportation

7. Details of disposal of hazardous waste:

Date of disposal	Concentration of hazardous material in the final waste form	Site of disposal (identify the location on the relevant layout drawing for reference)	Method of disposal	Persons involved in disposal

8. Data of environmental surveillance:

Date of measurement	Analysis of ground water			Analysis of soil samples			Analysis of air sampling			Analysis of any other samples (give details)
	Location of sampling	Depth of sampling	Data	Location of sampling	Depth of sampling	Data	Location of sampling	Data		

9. Details of the hazardous wastes reused and recycled:

Date	Total quantity of hazardous waste generated	Details of hazardous waste minimization activity	Material received	Final quantity of waste generated	Net reduction in waste generation quantity and percentage

S□□□□r□ □□S□□□□□r□□□r S□□ l□-□□r□□: **D□□:**

PROJECT:_____ CONTRACTOR:_____

DATE:_____ OWNER :_____

INSPECTION BY:_____

Note : write 'NA' wherever the items is not applicable

Item	Y	N	R□□ □r□□	A□□□□
HOUSEKEEPING				
Waste containers provided and used				
Passageways and walkways clear				
General neatness of working area				
Other				
PERSONNEL PROTECTIVE EQUIPTMENT				
Goggles; shields				
Face protection				
Hearing protection				
Respiratory masks etc.				
Safety belts				
Other				
EXCAVATIONS / OPENINGS				
Openings properly covered or barricaded				
Excavations shored				
Excavations barricaded				
Overnight lighting provided				
Other				
WELDING, CUTTING				
Gas cylinders chained upright				
Cable and hoses not obstructing				
Fire extinguisher (s) accessible				
Others				
SCAFFOLDING				
Fully decked platforms				
Guard and intermediate rails in place				
Toe boards in place				
Adequate shoring				
Adequate access				
Others				
LADDER				
Extension side rails 1 m above				
Top of landing				
Properly secured				
Angle + 70^0 from horizontal				
Other				

HOISTS, CRANES AND DERRICKS				
Condition of cables and sheaf OK				
Condition of slings, chains, hooks OK				
Inspection & maintenance log maintained				
Outriggers used				
Signals observed and understood				
Qualified operators				
Others				
MACHINERY, TOOLS & EQUIPMENT				
Proper instruction				
Safety devices				
Proper cords				
Inspection and maintenance				
Other				
VEHICLE AND TRAFFIC				
Rules and regulations observed				
Inspection and maintenance				
Licensed drivers				
Other				
TEMPORARY FACILITIES				
Emergency instructions posted				
Fire extinguishers provided				
Fire-aid equipment available				
General neatness				
Others				
FIRE PREVENTION				
Personnel instructed				
Fire extinguishers checked				
No smoking in prohibited areas.				
Hydrants				
Clearance				
Others				
ELECTRICAL				
Proper wiring				
ELCB’s provided				
Ground fault circuit interrupters				
Protection against damage				
Prevention of tripping hazards				
Other				
HANDLING & STORAGE OF MATERIALS				
Properly stored or stacked				
Passageways clear				
Other				
FLAMMABLE GASES AND LIQUIDS				
Containers clearly identified				
Proper storage				
Fire extinguisher nearby				
Other				

WORKING AT HEIGHT				
Safety nets				
Safety belts				
Safety helmets				
Anchoring of safety belt to the life line rope				
ENVIRONMENT				
Lubricant waste/engine oils properly dispose.				
Waste from Canteen, offices, sanitation etc. disposed properly.				
Disposal of surplus earth, stripping materials, expired batteries, oily rags and combustible materials done properly.				
HEALTH CHECKS				
Hygienic conditions at labor camps O.K.				
Availability of first-aid facilities				
Proper sanitation at site, office & labor camps.				
Arrangement of medical facilities.				
Measures for dealing with illness.				
Availability of potable drinking water for workmen & staff.				
Provision of crèches for children.				

S□□□□□r□ □□S□□□□□r□□□r S□□ l□-□□r□□: **D□□:**

	POWER SECTOR **Format for Inspection of Illumination / Lux Levels**	FORMAT NO: **HSEP:14-F21** REV NO.: 00 PAGE NO. 01 OF 1

Name of Site :	
Name of Sub-Contractor :	
Inspected by :	
Date of Inspection :	

Details of Lux Meter Used for Illumination Checking					
Serial Number		**Last inspection Date**		**Inspection Due Date**	

S. No	Location	Applicable Lux Value	Measured Lux Value	Comments
1				
2				
3				
4				
5				
6				
7				
8				
9				
10				
11				
12				
13				
14				
15				
Any other checks:				

Remarks:	**Name & Sign. Of Subcontractor HSE Officer**

	POWER SECTOR **Format for Incident Reporting**	FORMAT NO: **HSEP:14-F22** REV NO.: 00 PAGE NO. 01 OF 2

T□□□ □□□□□d□□□: F□□□□M□□□r□F□r□Pr□□□r□□ d□□ □□□ (T□□□ □ □□□□□ □□□□□□□□□□)

1	**N□□ □O□S□□□**		□	**A□□□□□□□ Ar□□**		
2	**S□□□□ O□W□r□**		4	**N□□ □O□C□□□r□□□□r**		
			□	**NAME □ DESIGNATION OF BHEL ACTI□ITY I□C**		
□	**D□□□ □ T□□ □O□ A□□d□□□**		□	**D□□□ R□□□□ □d**		
□	**N□. O□W□r□-D□□□ L□□□□□ □□□□□** **(I□D□□ N□□R□□□ □d□G□□ E□□□ □□d F□□r□)**					
□	**N□. O□M□□-□□r□ L□□B□O□□r□**					
10	**P□r□□□□D□□□□ O□I□□r□d □d□r D□□□□□ O□M□□r□□□E□□□ □□□Pr□□□r D□□ □□d**					
N□□ □			**N□□ □O□M□□r□□□E□□□ □□□Pr□□□r**			
P□rd O□E□ □□□□ □□□						
A□□	Yrs.	**S□□**	Male/Female	**E□□□ □□d C□□□**	**A□□□□C□□□**	
M□r□□S□□□	Single/ Married					
O□□□□□□□			**N□□r□O□D□□ □□□**			
P□r□O□B□d□I□□r□d						
N□□r□O□I□□r□						
A□□□□□ (O□□□□□E□□□ □□□S□□□□□□) M□□R□□□□□□□ **F□r C□□□□ A□□d□□□I□□r□ □D□□ □□□**						
12	**P□r□□ (N□□ □ D□□□□□□□) W□□ M□□C□□r□□O□r A□□□□ (O□□□□E□□□ □□□S□□□□□□) C□□□□ A□□d□□□I□□r□ □D□□ □□□**					
1□	**D□□r□□ C□□r□ H□□ □□ A□□d□□□O□□rr□d (U□□ Add□□□□S□□□I□R□□□r□d)**					

	A	
14	**W A d r C d C r d M D r T A d**	
1	**W Ar B R r T E T A d r C d**	
1	**W C rr A H B T Pr A d R rr**	
	D :	**S r O S HSE C rd r**
1	**C H d S**	
	D :	**S r O H d SO**

	POWER SECTOR	FORMAT NO: **HSEP:14-F23** REV NO.: 00 PAGE NO. 01 OF 1
	Format for Incident Recording	

Name of the Site									
Name of the Subcontractor									
Sl. No.	**Date & Time**	**Incident Type** (Near Miss /Minor/Major/Fatal/Fire/ Property Damage)	**Incident Location & Details**	**Basic Reason**	**Numbers Injured (Types of Injuries)**	**Sign**	**RCA Done**	**CAPA Details**	**Sign**

SECTION-B

Special Requirements

(Applicable to this Contract Only)

1. **E□□□□□□□□□ □□□□□C□□ □ □□ F□□□□□□□□□ □□r □ □□□□ Pr□□□□□– cost to be borne in full by subcontractor.**

T□□□ 1.1

S. N□.	I□□□	D□□□□□□ □□ □□r C□□□□□ N□. □□ □□□□ S□□□□□□	A□□□□□□□□ N□□ A□□□□□□□□ □ □□□ R□□ □r□□	P□□□□□□
1	Construction of Medical Centre	a	Applicable	Civil
2	Construction of Worker Training Centre (A part of safety park)	b	Applicable	Civil
3	Construction of Vertigo Test Structure (A part of safety park)	c	Applicable	Civil
4	Deployment of Specialists	d	Applicable	By concerned agencies
5	HSE Equipment	e	Applicable	By concerned agencies
6	HSE measurement devices	f	Applicable	By concerned agencies
7	Urinals in under-construction structures	g	Applicable	By concerned agencies
8	Safety Park	h	Applicable	Civil

□. **MEDICAL CENTRE**

i. A medical center shall be setup at site with basic facilities for handling medical emergencies

ii. Deployment of Medical Professional:

   1. **A □□□□□□□□d □ □d□□□□□r□□□□□□□□□□□□□□□□□d□□□□□d □□□□□ □□□□□□□ □□.**
   2. **W□□□ □□□□□□ □□□□□□ □ □r□□r □□r□□□□ □□ □□□ r□□□□□ □00□□ □d□□□□r□□□□□□□□□□ □□ MBBS D□□r□□ r□□ r□□□□□□□□d □□□□□□□□□□□r□□ □□ d□□□□□d**

iii. Ambulance shall be deployed along with a trained driver and accessories as per Schedule V of BOCW Central Rules, 1998. Ambulance shall be utilized exclusively for transporting the accident victim. Ambulance drivers shall be regularly trained in First Aid.

iv. Non deployment of Ambulance and First Aider as above shall invite a penalty of Rs. 30000 pm and Rs10000 PM respectively

□. Medical waste shall be disposed as per prevailing legislation (Bio-Medical Waste – Management and Handling Rules, 1998).

vi. Above are bare minimum requirements. Any legal requirements over and above these specifications shall supersede the above requirements

□. WORKER TRAINING CENTRE

i. Indoor Worker Training Center to be developed at site with seating capacity of at least 50 trainees
ii. Projector with following minimum specifications:

Native Resolution	XGA, 1024x768
Brightness (ANSI lumens)	3300
Contrast Ratio	13000:1
Display Color	30 Bits
Aspect Ratio	4:3

iii. A Laptop or Desktop PC with following minimum specifications:

Processor	Intel Celeron Dual Core
Memory (RAM)	2 GB
Graphics Card	2GB Video Memory
Hard Disk Capacity	60 GB
Monitor Size	14 inches
Keyboard	
Mouse	

iv. Stereo speakers with minimum 50W RMS sound output
v. PA system for Addressing Workers
vi. Seating arrangement

□. D□□□□□□□ □□□□□□□r□□□ T□□□S□r□□□r□:

Vertigo test Structure to be developed as per **A□□□□r□ 04**

d. S□□□□□□□□□:

Following specialists shall be deployed by the subcontractor, who shall cater to whole project as per BHEL requirements / instructions

I. **Q□□□□□d T□P I□□□□□□r:** □□□□□□r□□□r shall engage one qualified T&P inspector having undergone a certification course in the discipline.
II. **Q□□□□□d S□□□□d□□ Er□□□r □□d I□□□□□□r:** Subcontractor shall deploy one qualified Scaffolding Supervisor and Inspector having undergone a certification course in the discipline

e. **T□□□ □ E□□□□ □□□:** Following equipment conforming to relevant IS Codes for the job shall be ensured by subcontractor:

S. N□.	I□□□
1	Lifelines
2	Retractable Fall Arrestors
3	Safety Nets (10m X 5m)
4	Sky Climbers
5	Fire Blanket
6	Honey Bee Removal Suit & Kit
7	Flashback Arrestors
8	Barricading Tape
9	Binoculars
10	Walkie-Talkies
11	LOTO kit
12	24-Volt light
13	Sand Buckets
14	Hard barricading planks
15	Standby Fire kits

S. N□.	I□□□	T□□□ □□□□□ □P□r□□□□	R□□ □r□□
1	Lifelines (Steel Rope) and posts	Height work	
2	Retractable Fall Arrestors	Height Work	
3	Safety Nets (for fall protection; railings also to be covered)	Height Work	
4	Sky Climbers	Height Work	
5	Fire Blanket, Spark/ slag collector	Hot Work	
6	Honey Bee Removal Suit & Kit	General	
7	Flashback Arrestors	Hot work	
8	Barricading –Hard (Scaffolding Pipes & Clamps or fabricated using structural/round	Height Work, Excavation, General Barricading	
9	Binoculars	HSE Inspection	
10	Walkie-Talkies	Lifting	
11	LOTO kit	Working on charged line	
12	24-Volt light	Confined Space/ temp work	
13	Sand and Water Buckets	Hot work/Electrical work	
15	Standby Fire kits Fire extinguisher stands	Hot work/Electrical work	

Above equipment are bare minimum to be essentially maintained at all times. Additional numbers to be deployed as and when required in order to ensure fulfillment of all Safety requirements

f **HSE M**easu **r**ement **E**quipment & **T**ools

S. No	Device
1	ELCB Tester
2	Multi meter (Light cables)
3	Earth Resistance Meter
4	Lux Meter
5	Decibel Meter
6	Anemometer
7	Breath Analyzer (Alcohol)
8	Multi-gas analyzer
9	Gas leakage detector / alarm
10	Gas monitor (confined space)
11	Radiation meter & Badges
12	Blood pressure monitor
13	Fire detectors
14	Dust Particle Detector

g. **Ur**inals in **Und**er-cons □ruction s □ructu **r**es :

Urinals for in under-construction structures for easy access eg. In case of Boiler elevations etc.

2. **S□□r□d F**acilities – where part of operating cost is borne by subcontractor in proportion to contract value

The subcontractor shall bear running expenses of above facilities on a 'proportional to contract value sharing basis as finalized by BHEL.

S. N□.	F aci ity
1.	Operation of Ambulance, Nurses, Medical Consumables
2.	Construction, Maintenance & Upkeep of Latrines and Urinals in Common spaces
3.	Drinking Water Provision in Common Spaces
4.	Dust Control / Water Sprinkling, Pest Control, Fumigation at Site

LIST OF REFERENCES

S. N□	C□d□ N□□ □	T□□□
1	IS: 818-1888 (Reaffirmed 2003)	Code of Practice for Safety and Health requirements in Electric and Gas Welding and Cutting operations.
2	IS: 1179-1967 (Reaffirmed 2003)	Specification for Equipment for Eye & Face protection during welding.
□	IS: 1989 (Part 2):1986 (Reaffirmed 1997)	Specification for Leather Safety Boots & Shoes
4	IS:2925 – 1984 (Reaffirmed 2010)	Specification for Industrial Safety Helmets
□	IS:3521: 1999 (Reaffirmed 2002)	Industrial Safety Belts & Harnesses-Specification
□	IS:3646(Part II) – 1966(Reaffirmed 2003)	Code of Practice for Interior Illumination
□	IS:3696 (Part I) – 1987 (Reaffirmed 2002)	Safety Code for Scaffolds and Ladders
□	IS: 3696(Part 2) : 1991 (Reaffirmed 2002)	Scaffolds and Ladders-Code of Safety
□	IS: 3764:1992	Excavation Work – Code of Safety
10	IS:3786 – 1983 (Reaffirmed 2002)	Method for Computation of Frequency and Severity Rates for Industrial Injuries and Classification of Industrial Accidents
11	IS.4014.2.1967	Steel tubular Scaffolding
12	IS:4770: 1991 (Reaffirmed 2006)	Rubber Gloves Specification (Electricals Purposes)
1□	IS:4912: 1978 (Reaffirmed 2002)	Safety Requirements for Floor and Wall Openings, Railings and Toe Boards
14	IS: 5557 – 1969	Industrial and Safety rubber knee boots.
1□	IS: 5983 – 1980 (Reaffirmed 2002)	Specification for Eye-Protectors
1□	IS:6519 – 1971 (Reaffirmed 1997)	Code of Practice for Selection, Care and Repair of Safety Footwear
1□	IS.6549.1972	Glossary of terms used for Lifting tackles
1□	IS:6994(Part I)-1973 (Re affirmed 1996)	Specification for Industrial Safety Gloves Leather and Cotton Gloves
1□	IS.7215.1974	Steel Structure Fabrication
20	IS.7969.1975	Handling and storage of building material

21	IS:8519 – 1977 (Reaffirmed 1983)	Guide for Selection of Industrial Safety Equipment for Body Protection.
22	IS:8520 – 1977 (Reaffirmed 2002)	Guide for Selection of Industrial Safety Equipment for Eye, Face and Ear Protection.
2	IS:9167:1979	Specification for Ear-Protectors
24	IS:9473:2002	Respiratory Protective Devices-Filtering Half Masks to protect against Particles-Specification.
2	IS: 9944:1992 (Reaffirmed 2003)	Natural and Man-made Fiber Rope Slings- Recommendations on Safe working loads.
2	IS 11006 : 2011	Flash Back(Flame) Arrestor Specification
2	IS: 11226 – 1985	Leather Safety footwear having direct molding sole.
2	IS:11057 – 1884 (Reaffirmed 2001)	Specification for Industrial Safety Nets
2	IS: 12254:1993 (Reaffirmed 2002)	Polyvinyl Chloride (PVC) Industrial Boots Specification
0	IS:13367(Part 1):1992 (Reaffirmed 20030	Safe Use of Cranes-Code of Practice
1	IS: 14166:1994 (Reaffirmed 2002)	Respiratory Protective Devices-Full Face Masks Specification
2	IS:14746: 1999 (Reaffirmed 2003)	Respiratory Protective Devices-Half Masks and Quarter Masks - Specification
	IS: 15397 :2003 (Reaffirmed 2008)	Portable Extinguisher Mechanical Foam Type(Stored Pressure)-Specification
4	IS: 19011:2002	Guidelines for Quality and/or Environmental Management Systems Auditing

A□ □□r C□□r□□□L□□□r (R□□□□□□□□□□ □ A□□□□□□□□ A□□)□C□□□r□□R□□□□□□1□□1□

(1) The first-aid box shall be distinctively marked with a Red Cross on a white background and shall contain the following items, namely:

(□) F□r □□□□□□□□□□□ □□□□□ □□ □ □□□□□ □□□□ □□□□ □□r □□□□□□□r□□□□□□□□r□r□ □□ □□□□□□d d□□□ □□□□□□□□□□d □□□□□□□□□□□□ □□r□□□□d □□□□ □□□□□□□□□□□□□□ □□□□ □□□□□□□□ □□□□ □□□□□□□ □□□:

(i)	6 small sterilized dressings
(ii)	3 medium size sterilized dressings
(iii)	3 large size sterilized dressings
(iv)	6 pieces of sterilized eye pads in separate sealed packets.
(v)	6 roller bandages 10 cm wide.
(vi)	6 roller bandages 5 cm wide.
(vii)	One tourniquet
(viii)	A supply of suitable splints
(ix)	Three packets of safety pins.
(x)	Kidney tray.
(xi)	3 large sterilized burn dressings.
(xii)	1 (30ml) bottle containing a two percent alcoholic solution of iodine
(xiii)	1 (30 ml) bottle containing Sal volatile having the dose and mode of administration indicated on the label
(xiv)	1 snake bite lancet
(xv)	1 (30gms) bottle of potassium permanganate crystals.
(xvi)	1 pair scissors
(xvii)	1 copy of the First-Aid leaflet issued by the Director General, Factory Advice Service and Labor Institutes, Government of India.
(xviii)	A bottle containing 100 tablets (each of 5 grains) of aspirin
(xix)	Ointment for burns
(xx)	A bottle of suitable surgical anti-septic solution

Details and Contents of First Aid Box

(1) For every factory a first aid box or cupboard or room shall be provided and maintained and shall contain the following equipment:

(i)	12 small sterilized dressings
(ii)	6 medium size sterilized dressings
(iii)	6 large size sterilized dressings.
(iv)	6 large size sterilized burn dressings
(v)	6 (15 grams) packets sterilized cotton wool
(vi)	12 pieces of sterilized eye pads in separate sealed packets.
(vii)	12 roller bandages 10 cm wide.
(viii)	12 roller bandages 5 cm wide.
(ix)	One tourniquet.
(x)	A supply of suitable splints.
(xi)	Three packets of safety pins.
(xii)	Kidney tray.
(xiii)	Sufficient number of eye washes bottles filled with distilled water or suitable liquid clearly indicated by a distinctive sign which shall be visible at all times.
(xiv)	4 per cent Xylocaine eye drops, and boric acid eye drops and soda by carbonate eye drops.
(xv)	1 (60ml) bottle containing a two percent alcoholic solution of iodine
(xvi)	One (two hundred ml) bottle of mercurochrome (2 per cent) solution in water.
(xvii)	1 (120ml) bottle containing Sal volatile having the dose and mode of administration indicated on the label.
(xviii)	1 roll of adhesive plaster (6 cmX1 meter)
(xix)	2 rolls of adhesive plaster (2 cmX1 meter)
(xx)	A snake bite lancet.
(xxi)	1 (30 grams) bottle of potassium permanganate crystals.
(xxii)	1 pair scissors
(xxiii)	1 copy of the First-Aid leaflet issued by the Director-General, Factory Advice service and labor Institutes, Government of India.
(xxiv)	a bottle containing 100 tablets (each of 5 grains) of aspirin
(xxv)	Ointment for burns
(xxvi)	A bottle of a suitable surgical anti septic solution.

(2) Adequate arrangement shall be made for immediate recoupment of the equipment when necessary.

T□□□□ 1	
S. N□.	T□□□□
1	□□r□□□□ □H□□□□□□ □r□□□□ T□□□S□r□□□□r□ L□□□□□
2□□	S□r□□□□r□ L□□□□□S□□□□□
□	A□□□□□P□□□□ □□□ □□□□□□□□□r□□□□r□
4	B□□□□M□□□r□□□□
□	G□d□□□□□ □□r C□□d□□□□□ □□□ T□□□

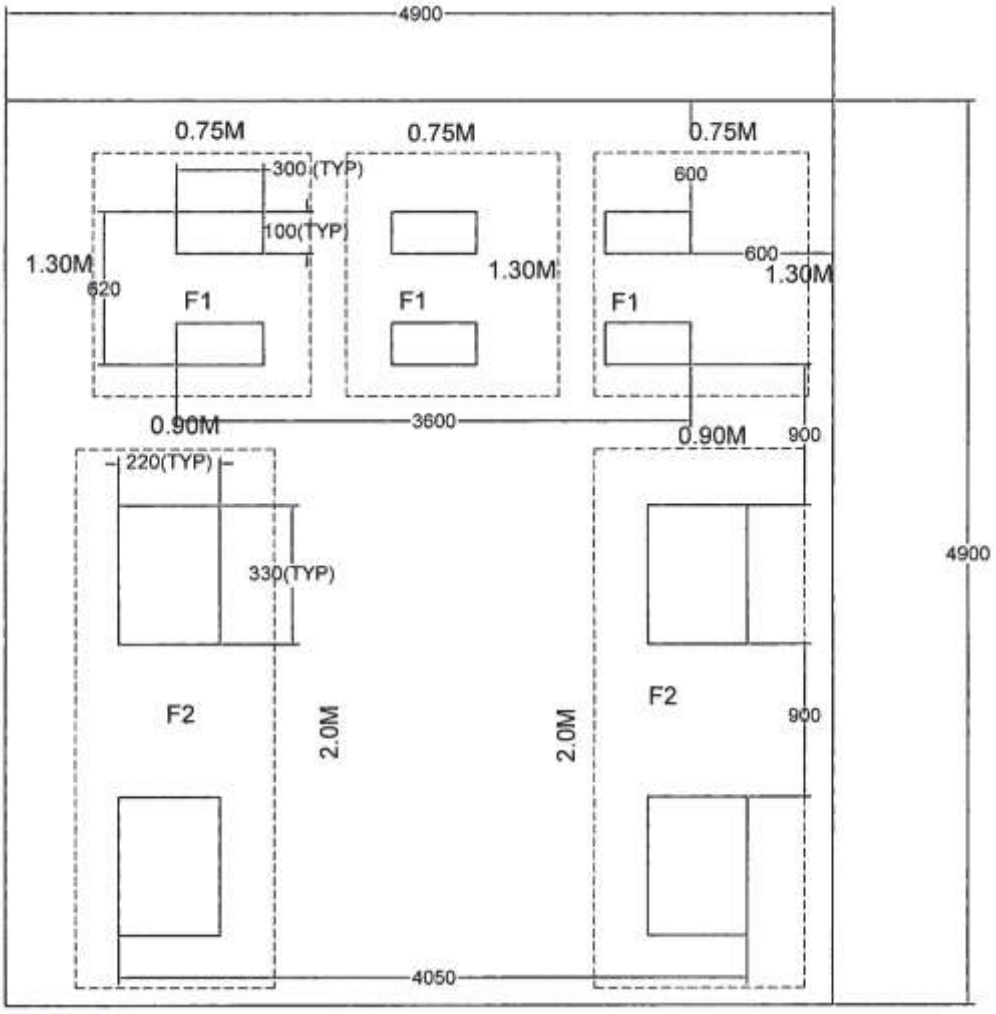

N□□:

- All dimensions are in mm
- Drawing is not to scale
- Inside boundary area to be filled with sand to level with road (external)
- Details of F1 and F2 are shown below

F□□r□ 1: □□r□□□□ □H□□□□□W□r□ T□□□S□r□□□□r□ L□□□□□

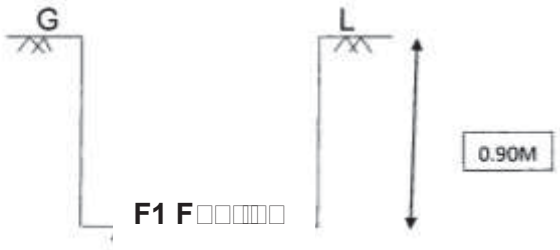

F1 F□□□□□□

F2 F□□□□□

N□□□:

- Concrete Grade is M15
- Drawing is not to scale
- TOC is at Road Level
- G L refers to Ground Level

F□□□r□ 2

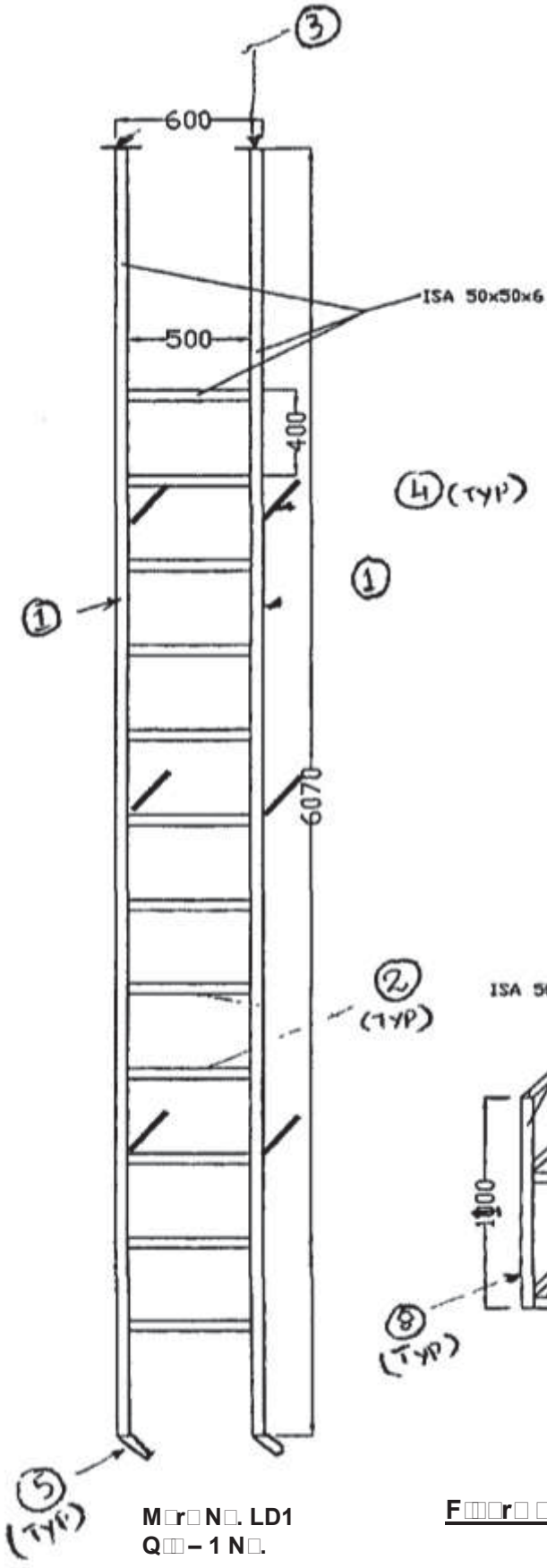

M□r□ N□. LD1
Q□□ – 1 N□.

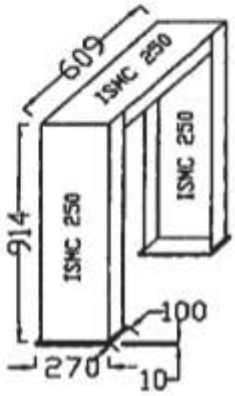

M□r□ N□. WB1
Q□□ – □N□□.

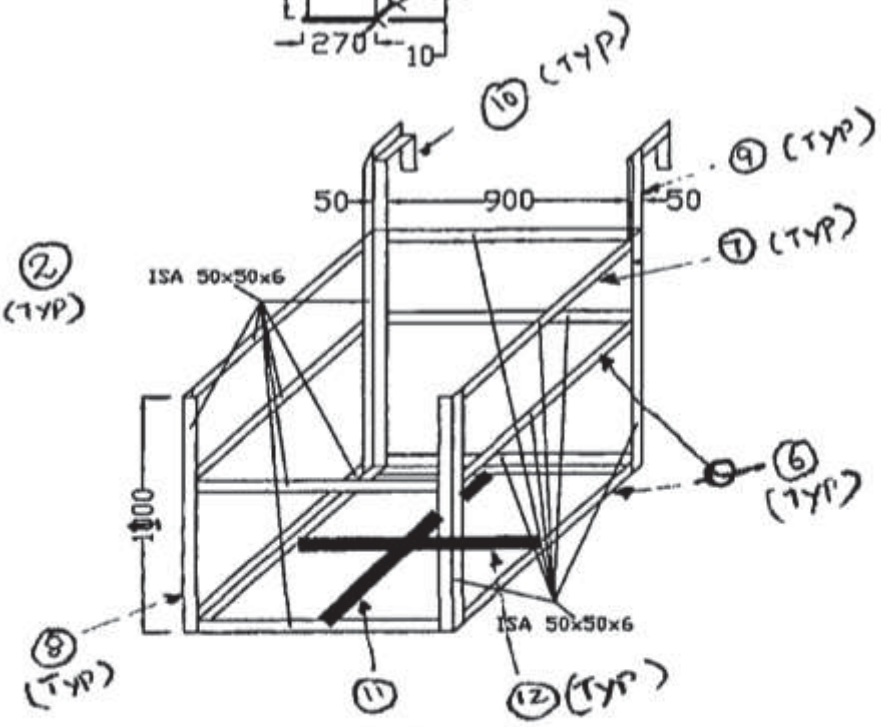

M□r□ N□. LD1
Q□□ – 1 N□.

F□□□r□ □

F□□□r□ 4

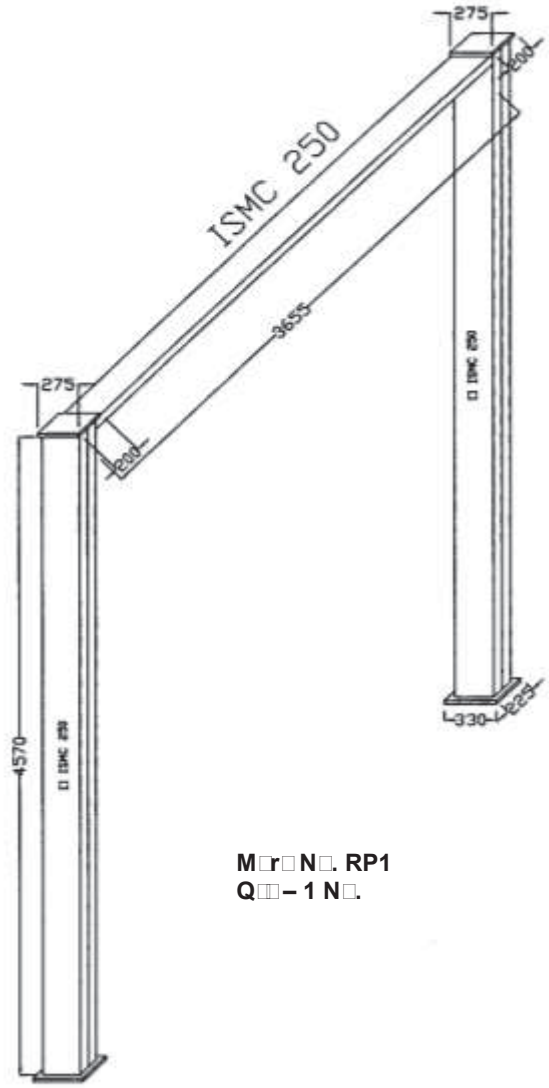

M□r□ N□. RP1
Q□□ – 1 N□.

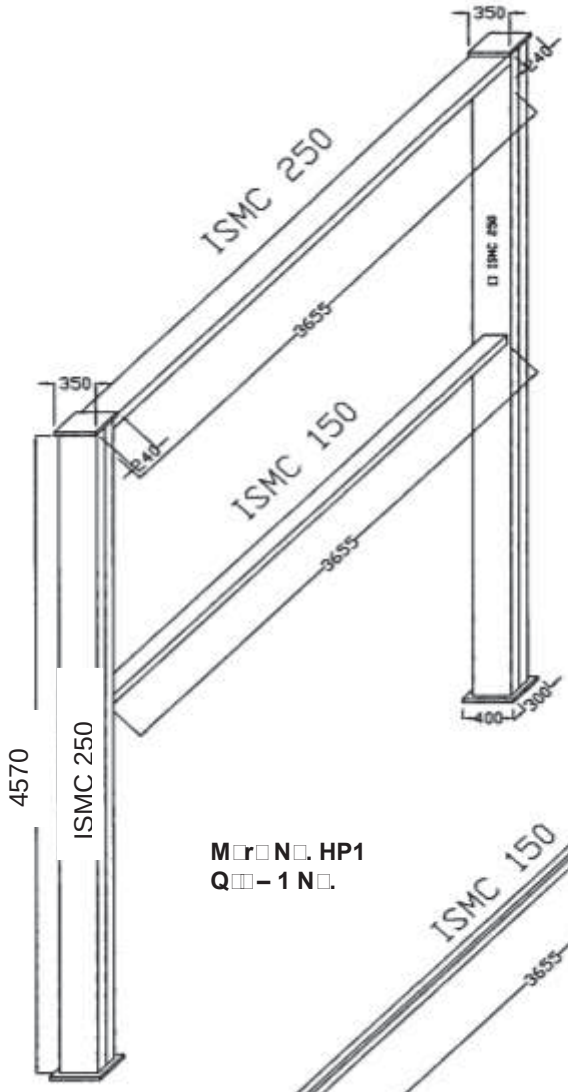

M□r□ N□. HP1
Q□□ – 1 N□.

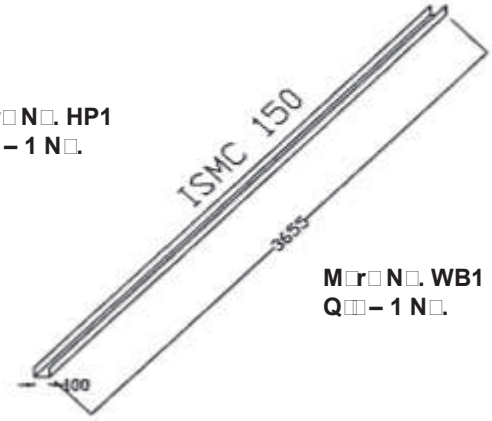

M□r□ N□. WB1
Q□□ – 1 N□.

P□□-1:A□□□□P□□□□ □□□ T□□□□□□□r□□□ T□□□

Table 2: BOM FOR HEIGHT WORK INDUCTION TRAINING MODULE						
Sl. No.	Description	Width (mm)	Length (mm)	Qty (No's)	Unit Wt (Kgs)	Total Wt. (Kgs)
MKD NO. WB1						
1	ISMC250		609	3	34.20	62.483
2	ISMC250		914	6	34.20	187.553
3	ISMC100		3655	1	9.56	34.942
4	PL10	100	270	6	78.50	12.717
			Total Weight (Kgs)			**297.695**
MKD NO. RP1						
1	ISMC250		4570	4	34.20	625.176
2	ISMC250		3655	1	34.20	125.001
3	PL25	225	330	2	196.25	29.143
4	PL25	200	275	2	196.25	21.588
			Total Weight (Kgs)			**800.908**
MKD NO. HP1						
1	ISMC250		4570	4	34.20	625.176
2	ISMC250		3655	1	34.20	125.001
3	ISMC150		3655	1	16.80	61.404
4	PL25	300	400	2	196.25	47.100
5	PL25	240	350	2	196.25	32.970
			Total Weight (Kgs)			**891.651**
MKD NO. LD1						
1	ISA50X50X6		6070	2	4.50	54.630
2	ISA50X50X6		500	12	4.50	27.000
3	PL12	75	75	2	94.20	1.060
4	ISA50X50X6		300	6	4.50	8.100
5	ISA50X50X6		255	2	4.50	2.295
6	ISA50X50X6		1000	8	4.50	36.000
7	ISA50X50X6		910	3	4.50	12.285
8	ISA50X50X6		1100	4	4.50	19.800
9	ISA50X50X6		650	2	4.50	5.850
10	ISA50X50X6		350	2	4.50	3.150
11	PL8	75	900	1	62.80	4.239
12	PL8	75	410	2	62.80	3.862
			Weight (Kgs)			**178.271**
			Total Weight (Kgs)			**2168.525**

A. T□□□Pr□□□d□r□ □G□□d□□□□□

Fear of height may be physiological or psychological. Therefore, to rule out any possibility of physiological factor, detailed medical check-up of workers is carried out before vertigo test. Medical check-up of workers includes the following:

history of past illnesses (like epilepsy, drug allergy, diabetics/ hypertension, unconsciousness etc.), general physical examination (like height, weight, BMI, build and nourishment etc.), measurement of pulse rate, Blood Pressure, respiratory rate.

After this check-up, those who are found suitable for height work by examining doctor, are allowed to undergo vertigo test.

During this health check-up, psychology of workers is also studied. If any worker finds it extremely difficult/ frightening to climb the monkey ladder & walk on the beam, during/after performing vertigo test or even before performing, then he is treated as disqualified.

As per standard, during vertigo test, worker is allowed to climb on a foundation through monkey ladder, walk on a beam, then steps down at the other end of beam, through monkey ladder. Height of the beam should be at least six feet from ground level. All necessary safety precautions are taken during this test. Worker has to wear full body harness with double lanyard. A horizontal lifeline is run parallel to the beam and worker has to put his lanyards into the lifeline. Additionally, a safety net is also put below the beam for rescue of the victim in case of a fall from beam.

Following activities are generally carried during testing:

1. **W□□□□□ B□□□□ Tr□□□□□:**
   a. Person should walk over the channel. He should maintain balance & walk without much problem.
   b. If the person has problem to balances himself on repeated chances, he may be having flat foot or some other problem. So, he may not be fit for height work.
2. **R□□□ C□□ □ Tr□□□□□:**
   Person should be able to climb the rope up to the top channel for ensuring that in case of fall, a person hanging on the safety harness, will be able to safely climb back to the platform within minimum time period before the safety harness start breaking down under the load.

□. **H□□□□W□r□ Tr□□□□□:**
   Person should walk freely on the middle channel while holding the top channel with the help of safety harness.

4. **L□dd□r □r □□r□□□□□□□□□rr□□□r Tr□□□□□:**
   Vertical fall arrestor rope is fixed from top to bottom of the ladder. It will ensure:
   - Usage of vertical fall arrestor.
   - Usage of two lanyards of a safety harness.
   - Ensure 3-point contact on the ladder while climb.

□. **C□□r □r □ □r□ □□□□□□□□Tr□□□□□:**
   - Climb though vertical ladder with two lanyard ropes.
   - Hooking of two lanyard ropes to life line. With this safe arrangement, he can walk to chair.
   - Sits in the chair safely, comes out & walks back to the vertical ladder & come down from vertical ladder. After completion of vertigo test, blood pressure of worker is again measured. If it is not within acceptable limits for any worker, concerned worker is denied height pass.

Only those who pass the above training are fit for height work.

S□□□□ P□r□ R□□□□r□□ □□□□

S.No	Training room(capacity 40 persons)	Qty.
1	Class room chair	25
2	Office Table	3
3	Rolling chair	3
4	Almirah	1
5	Visitor chair	10
6	Drawer	2
7	Single bed	1
8	Mattress	1
9	Projector	1
10	Projector screen	1
11	Sound speakers	1
12	Desktop Computer	3
13	Printer	1
14	White Board	1
15	Marker	5
16	Duster	1
17	Door Mat	9
18	Dustbin(Smaal + BIG)	7+1
19	Mannequin	1
20	Helmet	1
21	Face Shield	1
22	Safety Goggle	1
23	Welding sheild	1
24	Ear Muff	1
25	Ear Plug	1
26	Nose Mask	1
27	Breathing Apparatus	1
28	Hand Gloves(Cotton)	1
29	Hand Gloves for Electrician (Rubber)	1
30	Hand gloves Rubber	1
31	Hand Gloves Lather	1
32	Construction Safety Uniform(Boiler Suit)	1
33	Welding Apron	1
34	Safety Shoes	1
35	Leg Guard For Welder	1
36	Poster for Occupational Disease like Pneumoconosis,silicosis etc.	1
37	Gum Boot	1

38	Full Body Harness	1
39	8 MM Wire rope for life line. Length 20 Feet(FT).	1
40	Sfety Net for man & materials.Size 15 FT X 15FT.	1
41	MonkEy ladder 15 FT.	1
45	Fire Extingusher All types(DCP,CO2 & Foam)	1
46	Bed Sheet	1
47	Pillow	1
48	Curtain	12
49	curtain fittings	12
50	AC (1.5 TON)	3
51	AC (2 TON)	2
52	Rope pully.	1
53	PP Rope for pully 20 MTR.	
54	Ladder Clamps	6
55	Allumuniam ladder 6 MTR.	1
56	Carry Bag	
57	Scaffolding all Materilas for 5 Mtr. Height like.Sacffolding tubes,Sole plate,base plate,Right angle clamps,Swielclamps,beam clamps,Joint box/joint pin,toe guard/board,	

Health, Safety & Environment, Power Sector Headquarters

Bharat Heavy Electricals Limited

Regd. Office: BHEL House, Siri Fort, New Delhi – 110049, India

Website: www.bhel.com

TABLE OF CONTENTS

1. **Chapter-1 :** General Instructions to Tenderers
   - 1.1. Despatch Instructions
   - 1.2. Submission of Tenders
   - 1.3. Language
   - 1.4. Price Discrepancy
   - 1.5. Qualification of Tenderers
   - 1.6. Evaluation of Bids
   - 1.7. Data to be enclosed
   - 1.8. Authorisation and Attestation
   - 1.9. Earnest Money Deposit
   - 1.10. Security Deposit
   - 1.11. Return of Security Deposit
   - 1.12. Bank Guarantee
   - 1.13. Validity of offer
   - 1.14. Execution of Contract Agreement
   - 1.15. Rejection of Tender and other Conditions

2. **Chapter-2**
   - 2.1. Definitions
   - 2.2. Law Governing Contract and Court Jurisdiction
   - 2.3. Issue of Notice
   - 2.4. Use of land
   - 2.5. Commencement of Work

2.6. Measurement of Work and Mode of Payment
2.7. Rights of BHEL
2.8. Responsibilities of Contractor in respect of Local Laws, Employment of Workers etc
2.9. Progress Monitoring, Monthly Review and Performance Evaluation
2.10. Time of Completion
2.11. Extension of Time for Completion
2.12. Over Run Compensation
2.13. Interest Bearing Recoverable Advances
2.14. Quantity Variation
2.15. Extra Works
2.16. Supplementary Items
2.17. Price Variation Clause
2.18. Insurance
2.19. Strikes & Lockout
2.20. Force Majeure
2.21. Arbitration and Reconciliation
2.22. Retention Amount
2.23. Payments
2.24. Performance Guarantee for Workmanship
2.25. Closing of Contracts
2.26. Reverse Auction
2.27. Suspension of Business Dealings
2.28. Other Issues

CHAPTER -1

1. GENERAL INSTRUCTION TO TENDERERS

1.1. DESPATCH INSTRUCTION

i) The General Conditions of Contract form part of the Tender specifications. **All pages of the tender documents shall be duly signed, stamped and submitted along with the offer in token of complete acceptance thereof.** The information furnished shall be complete by itself. The tenderer is required to furnish all the details and other documents as required in the following pages

ii) Tenderers are advised to study all the tender documents carefully. Any submission of tender by the tenderer shall be deemed to have been done after careful study and examination of the tender documents and with the full understanding of the implications thereof. Should the tenderers have any doubt about the meaning of any portion of the Tender Specification or find discrepancies or omissions in the drawings or the tender documents issued are incomplete or shall require clarification on any of the technical aspect, the scope of work etc., he shall at once, contact the authority inviting the tender well in time (so as not to affect last date of submission) for clarification before the submission of the tender. Tenderer's request for clarifications shall be with reference to Sections and Clause numbers given in the tender documents. The specifications and terms and conditions shall be deemed to have been accepted by the tenderer in his offer. Non compliance with any of the requirements and instructions of the tender enquiry may result in the rejection of the tender.

iii) Integrity pact (IP) shall be applicable for all tenders / contracts if indicated in NIT. This integrity pact shall be issued as part of the Tender documents and shall be returned by the bidder along with Techno-commercial bid duly filled, signed and stamped by the authorized signatory who signs the bid. Only those vendors / bidders who have entered into such an IP with BHEL shall be considered qualified to participate in the bidding. Entering into this pact shall be a preliminary qualification.

1.2. SUBMISSION OF TENDERS

1.2.1 The tenderers must submit their tenders to Officer inviting tender as per instructions in the NIT

1.2.2 Tenders submitted by post shall be sent by 'REGISTERED POST ACKNOWLEDGEMENT DUE / by COURIER' and shall be posted with due allowance for any postal/courier delays. BHEL takes no responsibility for delay, loss or non-receipt of tenders sent by post/courier. **The tenders received after the specified time of their submission are treated as 'Late Tenders' and shall not be considered under any circumstances.** Offers received by Fax/Email/Internet shall be considered as per terms of NIT.

1.2.3 Tenders shall be opened by authorised Officer of BHEL at his office at the time and date as specified in the NIT, in the presence of such of those tenderers or their authorised representatives who may be present

1.2.4 Tenderers whose bids are found techno commercially qualified shall be informed the date and time of opening of the Price Bids and such Tenderers may depute their representatives to witness the opening of the price bids. BHEL's decision in this regard shall be final and binding.

1.2.5 Before submission of Offer, the tenderers are advised to inspect the site of work and the environments and be well acquainted with the actual working and other prevalent conditions, facilities available, position of material and labour, means of transport and access to Site, accommodation, etc. No claim will be entertained later on the grounds of lack of knowledge of any of these conditions.

1.3. LANGUAGE

1.3.1 The tenderer shall quote the rates in English language and international numerals. These rates shall be entered in figures as well as in words. For the purpose of the tenders, the metric system of units shall be used.

1.3.2 All entries in the tender shall either be typed or written legibly in ink. Erasing and over-writing is not permitted and may render such tenders liable for rejection. All cancellations and insertions shall be duly attested by the tenderer.

1.4 **PRICE DISCREPANCY:**

1.4.1 **Conventional (Manual) Price Bid opening** : In the case of price bid opening without resorting to Reverse Auction, if there are differences between the rates given by the tenderer in words and figures or in amount worked out by him, the following procedure for evaluation and award shall be followed:

i) When there is a difference between the rates in figures and in words, the rates which corresponds to the amounts worked out by the contractor, shall be taken as correct

ii) When the amount of an item is not worked out by the contractor or it does not correspond with the rate written either in figure or in words, then the rate quoted by the contractor in words shall be taken as correct

iii) When the rate quoted by the contractor in figures and words tallies but the amount is not worked out correctly, the rate quoted by the contractor shall be taken as correct and not the amount.

iv) In case of lumpsum price, if there is any difference between the amount in figures and in words, the amount quoted by the bidder in words shall be taken as correct.

v) In case of omission in quoting any rate for one or more items, the evaluation shall be done considering the highest quoted rate obtained against the respective items by other tenderers for the subject tender. If the tenderer becomes L-1, the notional rates for the omission items shall be the lowest rates quoted for the respective items by the other tenderers against the respective omission items for the subject job and the 'Total quoted price (loaded for omissions)' shall be arrived at. However the overall price remaining the same as quoted originally, the rates for all the items in the 'Total quoted price (loaded for omissions)' shall be reduced item wise in proportion to the ratio of 'Original' total price and the 'Total quoted price (loaded for omissions)''.

vi) The 'Final Total Amount' shall be arrived at after considering the amounts worked out in line with 'i' to 'iv' above.

1.4.2 **Reverse Auction**: In case of Reverse Auction, the successful bidder shall undertake to execute

the work as per overall price offered by him during the Reverse Auction process. In case of omission of rates, the procedure shall be as per 'Guidelines for Reverse Auction' enclosed.

1.5. **QUALIFICATION OF TENDERERS**

i) Only tenderers who have previous experience in the work of the nature and description detailed in the Notice Inviting Tender and/or tender specification are expected to quote for this work duly detailing their experience along with offer.

ii) Offers from tenderers who do not have proven and established experience in the field shall not be considered

iii) .Offers from tenderers who are under suspension (banned) by any Unit/Region/Division of BHEL shall not be considered.

iv) Offers from tenderers who do not comply with the latest guidelines of Ministry/Commissions of Govt of India shall not be considered.

1.6. EVALUATION OF BIDS

i) Technical Bids submitted by the tenderer will be opened first and evaluated for fulfilling the Pre Qualification criteria and other conditions in NIT/Tender documents, based on documentary evidences submitted along with the offer

ii) In case the same qualifying experience is claimed by more than one agency, then the agency who has executed the work as per documentary evidence submitted shall only be qualified. Scope of qualifying work should be totally with the agency who has executed and in case it is only labour+consumables without T&P, then the responsibility of execution is assigned to the first agency and not to the agency who has executed only as labour supply contractor. Further, BHEL reserves the right to ask for further proofs including submission of TDS certificates for the said job

iii) In case the qualifying experience is claimed by private organizations based on Work Order and completion certificates from another private organization, BHEL reserves the right to ask for further proofs including submission of TDS certificates for the said job

iv) Assessing Bidder Capacity for executing the current tender shall be as per Notice Inviting Tender

v) Price Bids of shortlisted bidders shall only be opened either through the conventional price bid opening or through electronic Reverse Auction, at the discretion of BHEL

vi) Price Bids of unqualified bidders shall not be opened. Reasons for rejection shall be intimated in due course after issue of LOI/LOA to successful bidder and receipt of unqualified acceptance from the successful bidder

vii) Bidders are advised to also refer to clause no 2.9.4 regarding evaluation of their performance in ongoing projects for the current tender

1.7. **DATA TO BE ENCLOSED**

Full information shall be given by the tenderer in respect of the following. Non-submission of this information may lead to rejection of the offer.

i) INCOME TAX PERMANENT ACCOUNT NUMBER

Certified copies of Permanent Account Numbers as allotted by Income Tax Department for the Company/Firm/Individual Partners, etc. shall be furnished along with tender.

ii) ORGANIZATION CHART

The organization chart of the tenderer's organization, including the names, addresses and contact

information of the Directors/Partners shall be furnished along with the offer.

iii) An attested copy of the Power of Attorney, in case the tender is signed by an individual other than the sole proprietor

iv) **IN CASE OF INDIVIDUAL TENDERER:**
His / her full name, address and place & nature of business.

v) **IN CASE OF PARTNERSHIP FIRM**
The names of all the partners and their addresses, A copy of the partnership deed/instrument of partnership dully certified by the Notary Public shall be enclosed.

vi) **IN CASE OF COMPANIES:**

a. Date and place of registration including date of commencement certificate in case of Public Companies (certified copies of Memorandum and articles of Association are also to be furnished).
b. Nature of business carried on by the Company and the provisions of the Memorandum relating thereof.

1.8 **AUTHORISATION AND ATTESTATION**
Tenders shall be signed by a person duly authorized/empowered to do so. An attested copy of the Power of Attorney, in case the tender is signed by an individual other than the sole proprietor shall be submitted along with the tenders

1.9 **EARNEST MONEY DEPOSIT**

1.9.1 Every tender must be accompanied by the prescribed amount of Earnest Money Deposit (EMD) in the manner described herein.

i) EMD shall be furnished along with the offer in full as per the amount indicated in the Special Conditions of Contract / NIT
ii) EMD is to be paid in cash (as permissible under Income Tax Act), Pay order or Demand Draft in favour of 'Bharat Heavy Electricals Limited' and payable at Regional HQ issuing the tender.
iii) No other form of EMD remittance shall be acceptable to BHEL
iv) Bidder may opt to deposit "One Time EMD" of Rs. 2.0 lakhs (Rupees Two lakhs only) with BHEL:Power Sector Region HQ issuing the tender, which will enable them to participate in all the future tender enquiries in respect of Erection and Commissioning services issued from the respective office. Interested bidders may clearly send their consent for converting the present EMD into a "One Time EMD" in their offer.
   - Note : The 'One Time EMD' cannot be withdrawn by the tenderers within 3 years from the date of deposit, under any circumstances. The Tenderer who wishes to withdraw after three years will not be allowed to submit 'One Time EMD' again.
v) Bidders who have already deposited such "One Time EMD" of Rs. 2.00 lakh are exempted from submission of EMD for this tender. However a copy of 'One Time EMD' certificate issued by BHEL Regional HQ issuing the tender shall be enclosed along with the offer.

1.9.2 EMD by the bidder will be forfeited as per Tender Documents if

i) After opening the tender, the bidder revokes his tender within the validity period or increases his

earlier quoted rates.

ii) The bidder does not commence the work within the period as per LOI/Contract. In case the LOI / contract is silent in this regard then within 15 days after award of contract.

1.9.3 EMD shall not carry any interest.

1.9.4 In the case of unsuccessful bidders, the Earnest Money will be refunded to them within a reasonable time after acceptance of award by successful tenderer.

1.10 SECURITY DEPOSIT

1.10.1 Upon acceptance of Tender, the successful Tenderer should deposit the required amount of Security Deposit for satisfactory completion of work, as per the rates given below:

SN	Contract Value	Security Deposit Amount
1	Up to Rs. 10 lakhs	10% of Contract Value
2	Above Rs. 10 lakhs upto Rs.50 lakhs	1 lakh + 7.5% of the Contract Value exceeding Rs. 10 lakhs.
3	Above Rs. 50 lakhs	Rs 4 lakhs + 5% of the Contract Value exceeding Rs. 50 lakhs.

1.10.2 The security Deposit should be furnished before start of the work by the contractor.

1.10.3 Security Deposit may be furnished in any one of the following forms

i) Cash (as permissible under the Income Tax Act)
ii) Pay Order / Demand Draft in favour of BHEL.
iii) Local cheques of scheduled banks, subject to realization.
iv) Securities available from Post Offices such as National Savings Certificates, Kisan Vikas Patras etc. (Certificates should be held in the name of Contractor furnishing the security and duly pledged in favour of BHEL and discharged on the back).
v) Bank Guarantee from Scheduled Banks / Public Financial Institutions as defined in the Companies Act. The Bank Guarantee format for Security Deposit shall be in the prescribed formats
vi) Fixed Deposit Receipt issued by Scheduled Banks / Public Financial Institutions as defined in the Companies Act. The FDR should be in the name of the contractor, A/C BHEL, duly discharged on the back.
vii) Security deposit can also be recovered at the rate of 10% from the running bills. However in such cases at least 50% of the Security Deposit should be deposited in any form as prescribed before start of the work and the balance 50% may be recovered from the running bills.
viii) EMD of the successful bidder can be converted and adjusted against the cash portion of Security Deposit excepting for such bidders who have remitted One Time EMD.

NOTE: Acceptance of Security Deposit against Sl. No. (iv) and (vi) above will be subject to hypothecation or endorsement on the documents in favour of BHEL. However, BHEL will not be liable or responsible in any manner for the collection of interest or renewal of the documents or in any other matter connected therewith.

1.10.4 The Security Deposit shall not carry any interest.

1.10.5 In case the value of work exceeds / reduces from the awarded / accepted value, the Security Deposit shall be correspondingly enhanced / reduced as given below:

i) The enhanced part of the Security Deposit shall be immediately deposited by the Contractor or adjusted against payments due to the Contractor.

ii) There will be no reduction in Security Deposit value in case of variation in contract value upto the lower limit specified in Quantity variation clause. In case of reduction of contract value beyond the lower limit specified in Quantity Variation clause, then the Security Deposit shall be re adjusted in proportion.

iii) In case of reduction, the reduced Contract value shall be certified by BHEL Construction Manager after ascertaining / freezing of BOQ / Drawings from the Design / Engineering Centre. The reduced Security Deposit value can only be considered after taking into account the adequacy of the securities held by BHEL to meet the liabilities of the contractor for the contract, and the performance of the contract in general. **In such cases, the revised value of Security Deposit shall be worked out only after execution of not less than the lower limit of the revised scope of work/contract value as per quantity variation clause, and as certified by Construction Manager. This reduction in value of Security Deposit shall not entitle the contractor to any amendment of Contract and shall be operated at the discretion of BHEL**

iv) Contract value for the purpose of operating the reduced/increased value of Security Deposit due to Quantity Variation, shall be exclusive of Price Variation Clause, Over Run Compensation and Extra works done on manday rates.

1.10.6 The validity of Bank Guarantees towards Security Deposit shall be initially upto the completion period as stipulated in the Letter of Intent/Award + 3 months, and the same shall be kept valid by proper renewal till the acceptance of Final Bills of the Contractor, by BHEL

1.10.7 BHEL reserves the right of forfeiture of Security Deposit in addition to other claims and penalties in the event of the Contractor's failure to fulfill any of the contractual obligations or in the event of termination of contract as per terms and conditions of contract. BHEL reserves the right to set off the Security Deposit against any claims of other contracts with BHEL.

1.11 RETURN OF SECURITY DEPOSIT

Security Deposit shall be refunded/Bank Guarantee(s) released to the Contractor along with the 'Final Bill' after deducting all expenses / other amounts due to BHEL under the contract / other contracts entered into with them by BHEL.

1.12 BANK GUARANTEES

Where ever Bank Guarantees are to be furnished/submitted by the contractor, the following shall be complied with

i) Bank Guarantees shall be from Scheduled Banks / Public Financial Institutions as defined in the Companies Act.

ii) The Bank Guarantees shall be as per prescribed formats.

iii) It is the responsibility of the bidder to get the Bank Guarantees revalidated/extended for the required period (subject to a minimum period of six months), as per the advice of BHEL Site Engineer / Construction Manager. BHEL shall not be liable for issue of any reminders regarding expiry of the

Bank Guarantees.

iv) In case extension/further extensions of any Bank Guarantees are not required, the bidders shall ensure that the same is explicitly endorsed by the Construction Manager and submitted to the Regional HQ issuing the LOI/LOA.

v) In case the Bank Guarantees are not extended before the expiry date, BHEL reserves the right to invoke the same by informing the concerned Bank in writing, without any advance notice/communication to the concerned bidder.

vi) Bidders to note that any corrections to Bank Guarantees shall be done by the issuing Bank, only through an amendment in an appropriate non judicial stamp paper.

vii) The Original Bank Guarantee shall be sent directly by the Bank to BHEL under Registered Post (Acknowledgement Due), addressed to the Subcontracting Department of the respective Region.

1.13 VALIDITY OF OFFER

The rates in the Tender shall be kept open for acceptance for a minimum period of **SIX MONTHS** from latest due date of offer submission (including extension, if any) . In case BHEL (Bharat Heavy Electricals Ltd) calls for negotiations, such negotiations shall not amount to cancellation or withdrawal of the original offer which shall be binding on the tenderers.

1.14 **EXECUTION OF CONTRACT AGREEMENT**

The successful tenderer's responsibility under this contract commences from the date of issue of the Letter of Intent by Bharat Heavy Electricals Limited. The Tenderer shall submit an unqualified acceptance to the Letter of Intent/Award within the period stipulated therein.

The successful tenderer shall be required to execute an agreement in the prescribed form, with BHEL, within a reasonable time after the acceptance of the Letter of Intent/Award, and in any case before releasing the first running bill. The contract agreement shall be signed by a person duly authorized/empowered by the tenderer. The expenses for preparation of agreement document shall be borne by BHEL

1.15 REJECTION OF TENDER AND OTHER CONDITIONS

1.15.1 The acceptance of tender will rest with BHEL which does not bind itself to accept the lowest tender or any tender and reserves to itself full rights for the following without assigning any reasons whatsoever:-

a. To reject any or all of the tenders.

b. To split up the work amongst two or more tenderers as per NIT

c. To award the work in part if specified in NIT

d. In case of either of the contingencies stated in (b) and (c) above, the time for completion as stipulated in the tender shall be applicable.

1.15.2 Conditional tenders, unsolicited tenders, tenders which are incomplete or not in the form specified or defective or have been materially altered or not in accordance with the tender

conditions, specifications etc., are liable to be rejected.

1.15.3 Tenders are liable to be rejected in case of unsatisfactory performance of the tenderer with BHEL, or tenderer under suspension (hold/banning /delisted) by any unit / region / division of BHEL or tenderers who do not comply with the latest guidelines of Ministry/Commissions of Govt of India. BHEL reserves the right to reject a bidder in case it is observed that they are overloaded and may not be in a position to execute this job as per the required schedule in line with clause no. 9.0 of the 'NIT'. The decision of BHEL will be final in this regard.

1.15.4 If a tenderer who is a proprietor expires after the submission of his tender or after the acceptance of his tender, BHEL may at their discretion, cancel such tender. If a partner of a firm expires after the submission of tender or after the acceptance of the tender, BHEL may then cancel such tender at their discretion, unless the firm retains its character.

1.15.5 BHEL will not be bound by any Power of Attorney granted by changes in the composition of the firm made subsequent to the execution of the contract. They may, however, recognise such power of Attorney and changes after obtaining proper legal advice, the cost of which will be chargeable to the contractor concerned.

1.15.6 If the tenderer deliberately gives wrong information in his tender, BHEL reserves the right to reject such tender at any stage or to cancel the contract if awarded and forfeit the Earnest Money/Security Deposit/any other money due.

1.15.7 Canvassing in any form in connection with the tenders submitted by the Tenderer shall make his offer liable to rejection.

1.15.8 In case the Proprietor, Partner or Director of the Company/Firm submitting the Tender, has any relative or relation employed in BHEL, the authority inviting the Tender shall be informed of the fact as per specified format, along with the Offer. Failing to do so, BHEL may, at its sole discretion, reject the tender or cancel the contract and forfeit the Earnest Money/Security Deposit.

1.15.9 The successful tenderer should not sub-contract part or complete work detailed in the tender specification undertaken by him without written permission of BHEL's Construction Manager/Site Incharge. The tenderer is solely responsible to BHEL for the work awarded to him.

1.15.10 The Tender submitted by a techno commercially qualified tenderer shall become the property of BHEL who shall be under no obligation to return the same to the bidder. However unopened price bids and late tenders shall be returned to the bidders

1.15.11 Unsolicited discount received after the due date and time of Bid Submission shall not be considered for evaluation. However, if the party who has submitted the unsolicited discount/rebate becomes the L-I party, then the awarded price i.e contract value shall be worked out after considering the discount so offered.

1.15.12 BHEL shall not be liable for any expenses incurred by the bidder in the preparation of the tender irrespective of whether the tender is accepted or not.

CHAPTER-2

2.1 **DEFINITION:** The following terms shall have the meaning hereby assigned to them except where the context otherwise requires

i) BHEL shall mean Bharat Heavy Electricals Limited (of the respective Power Sector Region inviting the Tender), a company registered under Indian Companies Act 1956, with its Registered Office at BHEL HOUSE, SIRI FORT, NEW DELHI – 110 049, or its Power Sector Regional Offices or its Authorised Officers or its Site Engineers or other employees authorised to deal with any matters with which these persons are concerned on its behalf.

ii) "EXECUTIVE DIRECTOR" or 'GROUP GENERAL MANAGER' or "GENERAL MANAGER (Incharge)" or "GENERAL MANAGER" shall mean the Officer in Administrative charge of the respective Power Sector Region.

iii) "COMPETENT AUTHORITY" shall mean Executive Director or Group General Manager or General Manager (Incharge) or General Manager or BHEL Officers who are empowered to act on behalf of the Executive Director or General Manager (Incharge) or General Manager of BHEL.

iv) "ENGINEER" or "ENGINEER IN CHARGE" shall mean an Officer of BHEL as may be duly appointed and authorized by BHEL to act as "Engineer" on his behalf for the purpose of the Contract, to perform the duty set forth in this General Conditions of Contract and other Contract documents. The term also includes 'CONSTRUCTION MANAGER' or 'SITE INCHARGE' as well as Officers at Site or at the Headquarters of the respective Power Sector Regions.

v) "SITE" shall mean the places or place at which the plants/equipments are to be erected and services are to be performed as per the specification of this Tender.

vi) "CLIENT OF BHEL" or "CUSTOMER" shall mean the project authorities with whom BHEL has entered into a contract for supply of equipments or provision of services.

vii) "CONTRACTOR" shall mean the successful Bidder/Tenderer who is awarded the Contract and shall include the Contractor's successors, heirs, executors, administrators and permitted assigns.

viii) "CONTRACT" or "CONTRACT DOCUMENT" shall mean and include the Agreement of Work Order, the accepted appendices of Rates, Schedules, Quantities if any, General Conditions of Contract, Special Conditions of Contract, Instructions to the Tenderers, Drawings, Technical Specifications, the Special Specifications if any, the Tender documents, subsequent amendments mutually agreed upon and the Letter of Intent/Acceptance issued by BHEL. Any conditions or terms stipulated by the contractor in the tender documents or subsequent letters shall not form part of the contract unless, specifically accepted in writing by BHEL in the Letter of Intent/Award and incorporated in the agreement.

ix) "GENERAL CONDITIONS OF CONTRACT" shall mean the 'Instructions to Tenderers' and 'General Conditions of Contract' pertaining to the work for which above tenders have been called for.

x)	"TENDER SPECIFICATION" or "TENDER" or "TENDER DOCUMENTS" shall mean General Conditions, Common Conditions, Special Conditions, Price Bid, Rate Schedule, Technical Specifications, Appendices, Annexures, Corrigendums, Amendments, Forms, procedures, Site information, etc and drawings/documents pertaining to the work for which the tenderers are required to submit their offers. Individual specification number will be assigned to each Tender Specification.
xi)	"LETTER OF INTENT" shall mean the intimation by a Letter/Fax/email to the tenderer that the tender has been accepted in accordance with provisions contained in the letter. The responsibility of the contractor commences from the date of issue of this letter and all terms and conditions of the contract are applicable from this date.
xii)	"COMPLETION TIME" shall mean the period by 'date/month' specified in the 'Letter of Intent/Award' or date mutually agreed upon for handing over of the intended scope of work, the erected equipment/plant which are found acceptable by the Engineer, being of required standard and conforming to the specifications of the Contract.
xiii)	"PLANT" shall mean and connote the entire assembly of the plant and equipments covered by the contract.
xiv)	"EQUIPMENT" shall mean equipment, machineries, materials, structural, electricals and other components of the plant covered by the contract.
xv)	"TESTS" shall mean and include such test or tests to be carried out on the part of the contractor as are prescribed in the contract or considered necessary by BHEL, in order to ascertain the quality, workmanship, performance and efficiency of the contractor or part thereof.
xvi)	"APPROVED", "DIRECTED" or "INSTRUCTED" shall mean approved, directed or instructed by BHEL.
xvii)	"WORK or CONTRACT WORK" shall mean and include supply of all categories of labour, specified consumables, tools and tackles and Plants required for complete and satisfactory site transportation, handling, stacking, storing, erecting, testing and commissioning of the equipments to the entire satisfaction of BHEL.
xviii)	"SINGULAR AND PLURALS ETC" words carrying singular number shall also include plural and vice versa, where the context so requires. Words imparting the masculine Gender shall be taken to include the feminine Gender and words imparting persons shall include any Company or Associations or Body of Individuals, whether incorporated or not.
xix)	"HEADING" – The heading in these General Conditions are solely for the purpose of facilitating reference and shall not be deemed to be part thereof or be taken as instructions thereof or of the contract.
xx)	"MONTH" shall mean calendar month unless otherwise specified in the Tender.

xxi)	Day' or 'Days' unless herein otherwise expressly defined shall mean calendar day or days of twenty four (24) hours each. A week shall mean continuous period of seven (7) days.
xxii)	"COMMISSIONING" shall mean the synchronisation testing and achieving functional operation of the Equipment with associated system after all initial adjustments, trials, cleaning, re-assembly required at site if any, have been completed and Equipment with associated system is ready for taking into service.
xxiii)	"WRITING" shall include any manuscript type written or hand written or printed statement or electronically transmitted messages, under the signature or seal or transmittal of BHEL.
xxiv)	"TEMPORARY WORK" shall mean all temporary works for every kind required in or for the execution, completion, maintenance of the work.
xxv)	'CONTRACT PRICE' or 'CONTRACT VALUE' shall mean the sum mentioned in the LOI/LOA/Contract Agreement subject to such additions thereto or deductions there from as may be made under provisions hereinafter contained
xxvi)	"COMMENCEMENT DATE" or "START DATE" shall mean the commencement/start of work at Site as per terms defined in the Tenderl
xxvii)	"SHORT CLOSING" or "FORE CLOSING" of Contract shall mean the premature closing of Contract, for reasons not attributable to the contractor and mutually agreed between BHEL and the contractor
xxviii)	"TERMINATION" of Contract shall mean the pre mature closing of contract due to reasons as mentioned in the contract
xxix)	"DE MOBILISATION" shall mean the temporary winding up of Site establishment by Contractor leading to suspension of works temporarily for reasons not attributable to the contractor
xxx)	"RE MOBILISATION" shall mean the resumption of work with all resources required for the work after demobilization.

2.2 **LAW GOVERNING THE CONTRACT AND COURT JURISDICTION**

The contract shall be governed by the Law for the time being in force in the Republic of India. The Civil Court having original Civil Jurisdiction at Delhi for PSNR, at Kolkata for PSER, at Nagpur for PSWR and at Chennai for PSSR, shall alone have exclusive jurisdiction in regard to all claims in respect of the Contract. No other Civil Court shall have jurisdiction in case of any dispute, under this contract

2.3 **ISSUE OF NOTICE**

2.3.1 **Service of notice on contractor**

Any notice to be given to the Contractor under the terms of the contract shall be served by sending the same **by Registered Post / Speed Post** to or leaving the same at the Contractor's last known address of the principal place of business (or in the event of the contractor being a company, to or at its Registered Office). In case of change of address, the notice shall be served at changed address as notified in writing by the Contractor to BHEL. Such posting or leaving of the notice shall be deemed to be good service of such notice and the time mentioned to the condition for doing any act after notice shall be reckoned from the date so mentioned in such notice.

2.3.2 **Service of notice on BHEL**

Any notice to be given to BHEL in-charge/Region under the terms of the Contract shall be served by sending the same by post to or leaving the same at BHEL address or changed address as notified in writing by BHEL to the Contractor.

2.4 **USE OF LAND**

No land belonging to BHEL or their Customer under temporary possession of BHEL shall be occupied by the contractor without written permission of BHEL.

2.5 **COMMENCEMENT OF WORK**

2.5.1 The contractor shall commence the work as per the time indicated in the Letter of Intent from BHEL and shall proceed with the same with due expedition without delay.

2.5.2 If the contractor fails to start the work within stipulated time as per LOI or as intimated by BHEL, then BHEL at its sole discretion will have the right to cancel the contract. The Earnest Money and/or Security Deposit with BHEL will stand forfeited without any further reference to him without prejudice to any and all of BHEL's other rights and remedies in this regard.

2.5.3 All the work shall be carried out under the direction and to the satisfaction of BHEL.

2.6 **MEASUREMENT OF WORK AND MODE OF PAYMENT:**

2.6.1 All payments due to the contractors shall be made by e mode only, unless otherwise found operationally difficult for reasons to be recorded in writing

.

2.6.2 For progress running bill payments: - The Contractor shall present detailed measurement sheets in triplicate, duly indicating all relevant details based on technical documents and connected drawings for work done during the month/period under various categories in line with terms of payment as per contract. The basis of arriving at the quantities, weights shall be relevant documents and drawings released by BHEL. These measurement sheets shall be prepared jointly with BHEL Engineers and signed by both the parties.

2.6.3 These measurement sheets will be checked by BHEL Engineer and quantities and percentage eligible for payment under various groups shall be decided by BHEL Engineer. The abstract of quantities and percentage so arrived at based on the terms of payment shall be entered in Measurement Book and signed by both the parties.

2.6.4 Based on the above quantities, contractor shall prepare the bills in prescribed format and work out the financial value. These will be entered in Measurement Book and signed by both the parties. Payment shall be made by BHEL after effecting the recoveries due from the contractor.

2.6.5 All recoveries due from the contractor for the month/period shall be effected in full from the corresponding running bills unless specific approval from the competent authorities is obtained to the contrary.

2.6.6 Measurement shall be restricted to that portion of work for which it is required to ascertain the financial liability of BHEL under this contract.

2.6.7 The measurement shall be taken jointly by persons duly authorized on the part of BHEL and by the Contractor.

2.6.8 The Contractor shall bear the expenditure involved if any, in making the measurements and testing of materials to be used/used in the work. The contractor shall, without extra charges, provide all the assistance with appliances and other things necessary for measurement.

2.6.9 If at any time due to any reason whatsoever, it becomes necessary to re-measure the work done in full or in part, the expenses towards such re measurements shall be borne by the contractor unless such re measurements are warranted solely for reasons not attributable to contractor.

2.6.10 Passing of bills covered by such measurements does not amount to acceptance of the completion of the work measured. Any left out work has to be completed, if pointed out at a later date by BHEL.

2.6.11 Final measurement bill shall be prepared in the final bill format prescribed for the purpose based on the certificate issued by BHEL Engineer that entire works as stipulated in tender specification has been completed in all respects to the entire satisfaction of BHEL. Contractor shall give unqualified "No Claim" Certificate. All the tools and tackles loaned to him should be returned in satisfactory condition to BHEL. The abstract of final quantities and financial values shall also be entered in the Measurement Books and signed by both parties to the contract. The Final Bill shall be prepared and paid within a reasonable time after completion of work.

2.7 **RIGHTS OF BHEL**

BHEL reserves the following rights in respect of this contract during the original contract period or its extensions if any, as per the provisions of the contract, without entitling the contractor for any compensation.

2.7.1 To withdraw any portion of work and/or to restrict/alter quantum of work as indicated in the contract during the progress of work and get it done through other agencies to suit BHEL's commitment to its customer or in case BHEL decides to advance the date of completion due to other emergent reasons/ BHEL's obligation to its customer.

2.7.2 To terminate the contract or get any part of the work done through other agency or deploy BHEL's own/hired/otherwise arranged resources , at the risk and cost of the contractor after due notice of a period of two weeks by BHEL, in the event of:-

i) Contractor's continued poor progress
ii) Withdrawal from or abandonment of the work before completion of the work
iii) Contractor's inability to progress the work for completion as stipulated in the contract
iv) Poor quality of work
v) Corrupt act of Contractor
vi) Insolvency of the Contractor
vii) Persistent disregard to the instructions of BHEL
viii) Assignment, transfer, sub-letting of contract without BHEL's written permission
ix) Non fulfillment of any contractual obligations
x) In the opinion of BHEL, the contractor is overloaded and is not in a position to execute the job as per required schedule

2.7.3 To meet the expenses including BHEL overheads on the differential cost at 5%, over and above the Liquidated damages/penalties arising out of "Risk & Cost" as explained above under Sl.No. 2.7.2. BHEL shall recover the amount from any money due from Contractor, or from any money due to the Contractor including Security Deposit, or by forfeiting any T&P or material of the contractor under this contract or any other contract of BHEL or by any other means or any combination thereof

2.7.4 To terminate the contract or to restrict the quantum of work and pay for the portion of work executed in case BHEL's contract with their customer are terminated for any reason, as per mutual agreement.

2.7.5 To effect recovery from any amounts due to the contractor under this or any other contract or in any other form, the moneys BHEL is statutorily forced to pay to anybody, due to contractor's failure to fulfill any of his obligations. BHEL shall levy overheads of 5% on all such payments along with interest as defined elsewhere in the GCC.

2.7.6 While every endeavour will be made by BHEL to this end, they cannot guarantee uninterrupted work due to conditions beyond their control. The Contractor will not be normally entitled for any compensation/extra payment on this account unless otherwise specified elsewhere in the contract.

2.7.7 In case the execution of works comes to a complete halt or reaches a stage wherein worthwhile works cannot be executed and there is no possibility of commencement of work for a period of not less than two months, due to reasons not attributable to the contractor and other than Force Majeure conditions, BHEL may consider permitting the contractor to de mobilize forthwith and re mobilize at an agreed future date. Cost of such demobilization/remobilization shall be mutually agreed. ORC in such cases shall not be applicable for the period between the period of demobilization and re mobilisation. The duration of contract/time extension shall accordingly get modified suitably. In case of any conflict, BHEL decision in this regard shall be final and binding on the contractor.

2.7.8 In the unforeseen event of inordinate delay in receipt of materials, drawings, fronts, etc, due to which inordinate discontinuity of work is anticipated, BHEL at its discretion may consider contractor's request to short close the contract in following cases:

a) The balance works (including but not limited to Trial Operation, PG Test, etc) are minor vis a vis the scope of work envisaged as per the contract.
b) There has been no significant work in past 6 months OR no significant work is expected in next 6 months (example in Hydro projects or in projects where work has stopped due to reasons beyond the control of BHEL)
c) The balance works cannot be done within a reasonable period of time as they are dependent on unit shutdown or on other facilities of customer or any other reasons not attributable to the contractor

At the point of requesting for short closure, contractor shall establish that he has completed all works possible of completion and he is not able to proceed with the balance works due to constraints beyond his control. In such a case, the estimated value of the unexecuted portion of work (or estimated value of services to be provided for carrying out milestone/stage payments like

Trial Operation/PG Test, etc) as mutually agreed, shall however be reduced from the final contract value.

2.7.9 **LIQUIDATED DAMAGES/PENALTY**

If the contractor fails to maintain the required progress of work which results in delay in the completion of the work as per the contractual completion period, BHEL shall have the right to impose Liquidated Damage/Penalty at the rate of 0. 5% of the contract value, per week of delay or part thereof subject to a maximum of 10% of the contract value. For this purpose, the period of delay shall be the delay attributable to the Contractor for the completion of work as per contract. Contract Value for this purpose, shall be the final executed value exclusive of ORC, Extra Works executed on Manday rate basis, Supplementary/Additional Items and PVC.

2.8 **RESPONSIBILITIES OF THE CONTRACTOR IN RESPECT OF LOCAL LAWS, EMPLOYMENT OF WORKERS ETC.**

The following are the responsibilities of the contractor in respect of observance of local laws, employment of personnel, payment of taxes etc. The subcontractor shall fully indemnify BHEL against any claims of whatsoever nature arising due to the failure of the contractor in discharging any of his responsibilities hereunder:

2.8.1 As far as possible, Unskilled Workers shall be engaged from the local areas in which the work is being executed.

2.8.2 The contractor at all times during the continuance of this contract shall, in all his dealings with local labour for the time being employed on or in connection with the work, have due regard to all local festivals and religious and other customs.

2.8.3 The contractor shall comply with all applicable State and Central Laws, Statutory Rules, Regulations etc. such as Payment of Wages Act, Minimum Wages Act, Workmen Compensation Act, Employer's Liability Act, Industrial Disputes Act, Employers Provident Act, Employees State Insurance Scheme, Contract Labour (Regulation and Abolition) Act 1970, Payment of Bonus & Gratuity Act and other Acts, Rules and Regulations for labour as may be enacted by the Government during the tenure of the Contract and having force or jurisdiction at Site. The Contractor shall also give to the local Governing Body, Police and other relevant Authorities all such notices as may be required by the Law.

2.8.4 The contractor shall obtain independent License under the Contract Labour (Regulations and Abolition Act, 1970)as required from the concerned Authorities based on the certificate (Form-V) issued by the Principal Employer/Customer

2.8.5 The contractor shall pay all taxes, fees, license charges, deposits, duties, tolls, royalties, commission or other charges which may be leviable on account of his operations in executing the contract.

2.8.6 While BHEL would pay the inspection fees and Registration fees of Boiler/Electrical Inspectorate,

all other arrangements for site visits periodically by the Inspectorate to site, Inspection certificate etc. will have to be made by contractor. However, BHEL will not make any payment to the Inspectorate in connection with contractor's Welders/Electricians qualification tests etc.

2.8.7 Contractor shall be responsible for provision of Health and Sanitary arrangements (more particularly described in Contract Labour Regulation & Abolition Act), Safety precautions etc. as may be required for safe and satisfactory execution of contract.

2.8.8 The contractor shall be responsible for proper accommodation including adequate medical facilities for personnel employed by him.

2.8.9 The contractor shall be responsible for the proper behavior and observance of all regulations by the staff employed by him.

2.8.10 The contractor shall ensure that no damage is caused to any person/property of other parties working at site. If any such damage is caused, it is responsibility of the contractor to make good the losses or compensate for the same.

2.8.11 All the properties/equipments/components of BHEL/their Client loaned with or without deposit to the contractor in connection with the contract shall remain properties of BHEL/their Client.

2.8.12 The contractor shall use such properties for the purpose of execution of this contract. All such properties/equipments/components shall be deemed to be in good condition when received by the contractor unless he notifies within 48 hours to the contrary. The contractor shall return them in good condition as and when required by BHEL/their Client. In case of non-return, loss, damage, repairs etc, the cost thereof as may be fixed by BHEL Engineer will be recovered from the contractor

2.8.13 In case the contractor is required to undertake any work outside the scope of this contract, the rates payable shall be those mutually agreed upon if the item rates are not mentioned in existing contract

2.8.14 Any delay in completion of works/or non achievement of periodical targets due to the reasons attributable to the contractor, the same may have to be compensated by the contractor either by increasing manpower and resources or by working extra hours and/or by working more than one shift. All these are to be carried out by the contractor at no extra cost.

2.8.15 The contractor shall arrange, coordinate his work in such a manner as to cause no hindrance to other agencies working in the same premises.

2.8.16 All safety rules and codes applied by the Client/BHEL at site shall be observed by the contractor without exception. The contractor shall be responsible for the safety of the equipment/material and works to be performed by him and shall maintain all light, fencing guards, slings etc. or other protection necessary for the purpose. Contractor shall also take such additional precautions as may be indicated from time to time by the Engineer with a view to prevent pilferage, accidents, fire hazards. Due precautions shall be taken against fire hazards and atmospheric conditions. Suitable number of Clerical staff, watch and ward, store keepers to take care of equipment/materials and construction tools and tackles shall be posted at site by the contractor till the completion of work

under this contract.

The contractor shall arrange for such safety devices as are necessary for such type of work and carry out the requisite site tests of handling equipment, lifting tools, tackles etc. as per prescribed standards and practices.

Contractor has to ensure the implementation of Health, Safety and Environment (HSE) requirements as per directions given by BHEL/Customer. The contractor has to assist in HSE audit by BHEL/Customer and submit compliance Report. The contractor has to generate and submit record/reports as per HSE plan/activities as per instruction of BHEL/Customer

2.8.17 The contractor will be directly responsible for payment of wages to his workmen. A pay roll sheet giving all the payments given to the workers and duly signed by the contractor's representative should be furnished to BHEL site for record purpose, if so called for.

2.8.18 In case of any class of work for which there is no such specification as laid down in the contract, such work shall be carried out in accordance with the instructions and requirements of the Engineer.

2.8.19 Also, no idle charges will be admissible in the event of any stoppage caused in the work resulting in contractor's labour and Tools & Plants being rendered idle due to any reason at any time.

2.8.20 The contractor shall take all reasonable care to protect the materials and work till such time the plant/equipment has been taken over by BHEL or their Client whichever is earlier.

2.8.21 The contractor shall not stop the work or abandon the site for whatsoever reason of dispute, excepting force majeure conditions. All such problems/disputes shall be separately discussed and settled without affecting the progress of work. Such stoppage or abandonment shall be treated as breach of contract and dealt with accordingly

2.8.22 The contractor shall keep the area of work clean and shall remove the debris etc. while executing day-to-day work. Upon completion of work, the contractor shall remove from the vicinity of work, all scrap, packing materials, rubbish, unused and other materials and deposit them in places specified by the Engineer. The contractor will also demolish all the hutments, sheds, offices, etc. constructed and used by him and shall clean the debris. In the event of his failure to do so, the same will be arranged to be done by the Engineer and the expenses recovered from the contractor.

2.8.23 The contractor shall execute the work in the most substantial and workman like manner in the stipulated time. Accuracy of work and timely execution shall be the essence of this contract. The contractor shall be responsible to ensure that the quality, assembly and workmanship conform to the dimensions and clearance given in the drawings and/ or as per the instructions of the Engineer.

2.8.24 The Contractor to note that some of BHEL's T&Ps/MMDs may not be insured. The Contractor will take necessary precautions and due care to protect the same while in his custody from any damage/ loss till the same is handed over back to BHEL. In case the damage / loss is due to carelessness/ negligence on the part of the contractor, the Contractor is liable to get them repair/

replaced immediately and in case of his failure to do so within a reasonable time, BHEL will reserve the right to recover the loss from the contractor.

2.9 **PROGRESS MONITORING, MONTHLY REVIEW AND PERFORMANCE EVALUATION**

2.9.1 A detailed plan/programme for completion of the contractual scope of work as per the time schedule given in the contract shall be jointly agreed between BHEL and Contractor, before commencement of work . The above programme shall be supported by monthwise deployment of resources viz Manpower, T&P, Consumables, etc. Progress will be reviewed periodically (Daily/Weekly/Monthly) vis a vis this jointly agreed programme. The Contractor shall submit periodical progress reports (Daily/Weekly/Monthly) and other reports/information including manpower, consumables, T&P mobilization etc as desired by BHEL.

2.9.2 Monthly progress review between BHEL and Contractor shall be based on the agreed programme as above, availability of inputs/fronts etc, and constraints if any, as per prescribed formats. Manpower, T&P and consumable reports as per prescribed formats shall be submitted by contractor every month. Release of RA Bills shall be contingent upon certification by BHEL Site Engineer of the availability of the above prescribed formats duly filled in and signed.

2.9.3 The burden of proof that the causes leading to any shortfall is not due to any reasons attributable to the contractor is on the contractor himself. The monthly progress review shall record shortfalls attributable to (i) Contractor, (ii) Force Majeure Conditions, and (iii) BHEL

2.9.4 Performance of the Contractor shall be assessed as per prescribed formats and shall form the basis for 'Annual/Overall Performance Evaluation' of the Contractor and also for 'Assessment of Capacity of Bidder' for Tenders where the Contractor is a bidder. BHEL reserves the right to revise the evaluation formats during the course of execution of the works

2.10 **TIME OF COMPLETION**

2.10.1 The time schedule shall be as prescribed in the Contract. The time for completion shall be reckoned from the date of commencement of work at Site as certified by BHEL Engineers

2.10.2 The entire work shall be completed by the contractor within the time schedule or within such extended periods of time as may be allowed by BHEL under clause 2.11

2.11 **EXTENSION OF TIME FOR COMPLETION**

2.11.1 If the completion of work as detailed in the scope of work gets delayed beyond the contract period, the contractor shall request for an extension of the contract and BHEL at its discretion may extend the Contract.

2.11.2 Based on the monthly reviews jointly signed, the works balance at the end of original contract period less the backlog attributable to the contractor shall be quantified, and the number of months of 'Time extension' required for completion of the same shall be jointly worked out. Within this period of 'Time extension', the contractor is bound to complete the portion of backlog attributable to the contractor. Any further 'Time extension' or 'Time extensions' at the end of the previous extension shall be worked out similarly.

2.11.3 However if any 'Time extension' is granted to the contractor to facilitate continuation of work and completion of contract, due to backlog attributable to the contractor alone, then it shall be without prejudice to the rights of BHEL to impose penalty/LD for the delays attributable to the contractor, in addition to any other actions BHEL may wish to take at the risk and cost of contractor.

2.11.4 A joint programme shall be drawn for the balance amount of work to be completed during the period of 'Time Extension', along with matching resources (with weightages) to be deployed by the contractor as per specified format. Review of the programme and record of shortfall shall be done

every month of the 'Time extension' period in the same manner as is done for the regular contract period.

2.11.5 During the period of 'Time extension', contractor shall maintain their resources as per mutually agreed program

2.11.6 At the end of total work completion as certified by BHEL Engineer, and upon analysis of the total delay, the portion of time extensions attributable to (i) Contractor, (ii) Force majeure conditions, and (iii) BHEL, shall be worked out and shall be considered to be exhausted in the same order. The total period of time extensions shall be the sum of (i), (ii) and (iii) above and shall be equal to period between the scheduled date of completion and the actual date of completion of contract. LD shall be imposed/levied for the portion of time extensions attributable to contractor and recoverable from the dues payable to the contractor.

2.12 **OVERRUN COMPENSATION**

2.12.1 Over Run Compensation (ORC) is payable for works done during the extension period, by way of rate revisions for periods beyond original contract period subject to the following terms and conditions.

2.12.2 Rates shall be increased by 10% for the first twelve months of one or more extensions beyond original contract period. For the next twelve months of further extensions if any, rates shall be increased as above by 10% over the previous twelve months, and similarly for each subsequent twelve months extension.

2.12.3 The amount of increase payable per month due to rate revisions is subject to a minimum of Rs 1,00,000/- per month and a maximum of Rs 10,00,000/- per month.

2.12.4 Should there be any 'Time extension' for reasons attributable only to the contractor, then the work shall be executed by the contractor at the rates applicable for the period the work was planned

2.12.5 Payment of ORC shall be regulated as follows:

i) Contractor is entitled to Over Run Compensation (ORC) only for the portion of backlog attributable to BHEL.

ii) 50% of the compensation as per clause 2.12.3 is allocated for deployment of resources agreed as per the joint programme drawn vide 2.11.4. Payment shall however be based on the actual deployment of resources for the month as certified by BHEL, as per weightages assigned therein

iii) 50% of the compensation as per clause 2.12.3, is allocated for achieving of planned progress agreed as per the joint programme drawn vide 2.11.4. Payment shall be on pro rata basis for actual achieved quantities

iv) Total Over Run Compensation shall be limited to 10% of the executed contract value as certified in Final Bill. For this purpose executed contract value excludes PVC, ORC, Supplementary/Additional Items and Extra Works done on Manday rate basis

2.12.6 Contractor shall not be entitled for any Over Run Compensation (ORC) for the portion of backlog attributable to the contractor. Such works shall be executed at the rates applicable for the period the work was planned

2.13 **INTEREST BEARING RECOVERABLE ADVANCES**

2.13.1 Normally no advance is payable to the contractor. However, advance payment in exceptional circumstances shall be interest bearing and secured through a Bank Guarantee and shall be limited to a maximum of 5% of contract value. This 'Interest Bearing Recoverable Advance' shall be

payable in not less than two installments with any of the installment not exceeding 60% of the total eligible advance.

2.13.2 In exceptional circumstances, with due justification, Competent Authority of BHEL is empowered to approve proposals for payment of additional interim interest bearing advance against Bank Guarantee, for resource augmentation towards expediting work for project implementation.

2.13.3 Bank Guarantee towards 'Interest Bearing Recoverable Advance' shall be atleast 110% of the advance so as to enable recovery of not only principle amount but also the interest portion, if so required.

2.13.4 Contractor shall establish the utilization of advance drawn before the release of next installment.

2.13.5 Payment and recovery of Interest Bearing Recoverable advance shall be at the sole discretion of BHEL and shall not be a subject matter of arbitration.

2.13.6 The rate of interest applicable for the above advances shall be the prime lending rate of State Bank of India prevailing at the time of disbursement of the advance + 2%, and such rate will remain fixed till the total advance amount is recovered

2.13.7 Unadjusted amount of advances paid shall not exceed 5% of the total contract value at any point of time. Recovery of advances shall be made progressively from each Running Bill such that the advance amounts paid along with the interest is fully recovered by the time the contractor's billing reaches 80% of contract value.

2.13.8 Recovery rate per month shall be the sum of:
a. Not less than 10% of Running Bill amount
b. Simple interest up to the date of RA Bill on the outstanding Principle amount/amounts

2.13.9 Contractor to submit Bank Guarantee as per prescribed formats for each of the advance and shall be valid for at least one year or the recovery duration or the balance contract period which ever is later. In case the recovery of dues does not get completed within the aforesaid BG period, the contractor shall renew the BG or submit fresh BG for the outstanding amount and the remaining recovery period.

2.13.10 BHEL is entitled to make recovery of the entire outstanding amount in case the contractor fails to comply with the BG requirement

2.14 **QUANTITY VARIATION**

2.14.1 The quoted rates shall remain firm irrespective of any variations in the individual quantities. No compensation becomes payable in case the variation of the final executed contract value is within the limits of Plus (+) or Minus (-) 15% of awarded contract value

2.14.2 Compensation due to variation of final executed value in excess of the limits defined in clause above, shall be as follows:

i) In case the finally executed contract value reduces below the lower limit of Contract Value due to quantity variation specified above, the contractor will be eligible for compensation @ 15% of the difference between the lower limit of the contract value and the actual executed value.

ii) In case the finally executed contract value increases above the upper limit of Contract Value

due to quantity variation specified above, there will be no revision in the rates within the contract period.

2.15 **EXTRA WORKS**

2.15.1 All rectifications/modifications, revamping, and reworks required for any reasons not due to the fault of the contractor, or needed due to any change in deviation from drawings and design of equipments, operation/maintenance requirements, mismatching, or due to damages in transit, storage and erection/commissioning, and other allied works which are not very specifically indicated in the drawings, but are found essential for satisfactory completion of the work, will be considered as extra works.

2.15.2 Extra works arising on account of the contractor's fault, irrespective of time consumed in rectification of the damage/loss, will have to be carried out by the contractor free of cost. Under such circumstances, any material and consumable required for this purpose will also have to be arranged by the contractor at his cost.

2.15.3 All the extra work should be carried out by a separately identifiable gang, without affecting routine activities. Daily log sheets in the pro-forma prescribed by BHEL should be maintained and shall be signed by the contractor's representative and BHEL engineer. No claim for extra work will be considered/entertained in the absence of the said supporting documents i.e. daily log sheets. Signing of log sheets by BHEL engineer does not necessarily mean the acceptance of such works as extra works.

2.15.4 BHEL retains the right to award or not to award any of the major repair/ rework/modification/rectification/fabrication works to the contractor, at their discretion without assigning any reason for the same

2.15.5 After eligibility of extra works is established and finally accepted by BHEL engineer/designer, payment will be released on competent authority's approval at the following rate.

MAN-HOUR RATE FOR ELIGIBLE EXTRA WORKS: Single composite average labour man-hour rate, including overtime if any, supervision, use of tools and tackles and other site expenses and incidentals, consumables for carrying out any major rework/ repairs/ rectification/ modification/ fabrication as certified by site as may arise during the course of erection, testing, commissioning or extra works arising out of transit, storage and erection damages, payment, if found due will be at Rs 60/- per man hour.

2.15.6 The above composite labour man hour rate towards extra works shall remain firm and not subject to any variation during execution of the work. PVC will not be applicable for extra works. Rate revision, Over Run Charges/compensation etc will not be applicable due to extra works.

2.15.7 **Extra Works for Civil Packages** shall be regulated as follows

i) Rates for Extra Works arising due to (1) non availability of BOQ (Rate Schedule), OR (2) change in Specifications of materials/works (3) rectification/modification/dismantling & re erecting etc due to no fault of Contractor, shall be in the order of the following:

a) Item rates are to be derived from similar nature of items in the BOQ (Rate Schedule) with applicable escalation derived from All India Consumer Price Index for Whole Sale Commodities.
b) As per CPWD-DSR-2007 (or latest edition) with applicable escalation derived from All India Consumer price Index for Whole Sale Commodities, OR, Notification issued by the office of CPWD for 'Cost Index' in that Region where the project is being executed, whichever is less
c) Item rates are to be worked out on the basis of prevailing market rates mutually agreed between BHEL and Contractor, plus 15% towards Contractor's overheads and profit.

ii) PVC and ORC will not applicable be for (i) above.

2.16 **SUPPLEMENTARY ITEMS**

2.16.1 **For NON Civil Works**

Supplementary items are items/works required for completion of entire work but not specified in the scope of work. Subject to certification of such items/works as supplementary items by BHEL Engineer, rates shall be derived on the basis of any one of the following on mutual agreement:

i) Based on percentage breakup/rates indicated for similar/nearby items

ii) In case (i) above does not exist, then BHEL/site may derive the percentage breakup/rates to suit the type of work

2.16.2 **For Civil Works**

i) Rates for Supplementary Works/Additional Works arising out due to additions/alterations in the original scope of works as per contract subject to certification of BHEL Engineer shall be worked out as under:

a) Item rates which are available in existing BOQ (Rate Schedule) shall be operated with applicable escalation derived from All India Consumer Price Index for Whole Sale Commodities
b) Items of works which are not available in existing BOQ shall be operated as an 'Extra Works' and rate shall be derived as per clause no 2.15.7

ii) Execution of Supplementary Works/Additional Works through the Contractor shall be at the sole discretion of BHEL, and shall be considered as part of executed contract value for the purpose of Quantity Variation as per clause 2.14

iii) BHEL Engineer's decision regarding fixing the rate as above is final and binding on the contractor.

iv) PVC and ORC will not be applicable for (i) above.

2.17 **PRICE VARIATION COMPENSATION**

2.17.1 In order to take care of variation in cost of execution of work on either side, due to variation in the index of LABOUR, HIGH SPEED DIESEL OIL, WELDING ROD, CEMENT, STEEL, MATERIALS, Price Variation Formula as described herein shall be applicable

2.17.2 85% component of Contract Value shall be permitted to be adjusted for variation in various relevant indices during execution of work. The remaining 15% shall be treated as fixed component

2.17.3 The basis for calculation of price variation in each category, their component, Base Index, shall be as under:

SL NO.	CATEGORY	BASE INDEX	COMPONENT ('K')		
			CIVIL PACKAGES (See Note A/B/C)	MECHANICAL PACKAGES	LABOUR ORIENTED

			A	B**	C		PACKAGES (See Note D)
i)	LABOUR (ALL CATEGORIES)	'MONTHLY ALL-INDIA AVERAGE CONSUMER PRICE INDEX NUMBERS FOR INDUSTRIAL WORKERS' published by Labour Bureau, Ministry of Labour and Employment, Government of India. (Website: labourbureau.nic.in)	**40**	**25**	**30**	**65**	**80**
ii)	HIGH SPEED DIESEL OIL	Name of Commodity : HSD OIL. Type : INDIVIDUAL COMMODITY (**See Note F**)	**5**	**3**	**5**	**5**	**5**
iii)	WELDING ROD	Name of Commodity : WELDING ROD Type: INDIVIDUAL COMMODITY (**See Note F**)				**15**	
iv)	CEMENT	Name of Commodity : GREY CEMENT Type: INDIVIDUAL COMMODITY (**See Note F**)		**20**	**30**		
v)	STEEL (Structural and Reinforcement Steel)	Name of Commodity : a1. IRON & SEMIS Type: GROUP ITEM (**See Note F**)		**25**			
vi)	MATERIALS (Other than Cement & Steel)	Name of Commodity: ALL COMMODITIES Type: GROUP ITEM (**See Note F**)	**40**	**12**	**20**		

Note: A) Cement & Steel : Free Issue (BHEL Scope)

B) Cement & Steel : In Contractor Scope {: unless otherwise specified in Special Conditions of Contract (SCC) }**

C) Cement in Contractor Scope, and Steel is Free Issue (BHEL Scope)

D) Predominantly 'Labour Oriented' packages including Material Handling & Management, Insulation, Painting, Electrical and CI or a combination thereof, which are separately tendered and awarded

E) For Composite packages (i.e. Civil+Mechanical+Electrical/CI or Civil+Mechanical or Mechanical+Electrical/CI), the components for various categories shall be as per respective packages

F) As per the 'MONTHLY WHOLE SALE PRICE INDEX' for the respective Commodity and Type, published by Office of Economic Adviser, Ministry of Commerce and Industry, Government of India. (Website : www.eaindustry.nic.in). Revisions in the index or commodity will be re adjusted accordingly.

2.17.4 Payment/recovery due to variation in index shall be determined on the basis of the following notional formula without any initial absorption, in respect of the identified components viz LABOUR, HIGH SPEED DIESEL OIL, WELDING ROD, CEMENT, STEEL, MATERIALS

$$P = K \times R \times \frac{(X_N - X_o)}{X_o}$$

Where

P = Amount to be paid/recovered due to variation in the Index for Labour, High Speed Diesel Oil, Welding Rod, Cement, Steel and Materials

K = Percentage component applicable for Labour, High Speed Diesel Oil, Welding Rod, Cement, Steel and Materials

R = Value of work done for the billing month (Excluding Taxes and Duties if payable extra)

XN = Revised Index No for Labour, High Speed Diesel Oil, Welding Rod, Cement, Steel and Materials for the billing month under consideration

Xo = Index no for Labour, High Speed Diesel Oil, Welding Rod, Cement, Steel and Materials as on the Base date.

2.17.5 **Base date shall be calendar month of the latest date of submission of Tender.**

2.17.6 PVC shall not be payable for the ORC amount, Supplementary/Additional Items, Extra works.

2.17.7 The contractor shall furnish necessary monthly bulletins for the necessary indices from the relevant websites along with his Bills.

2.17.8 The contractor will be required to raise the bills for price variation payments on a monthly basis along with the running bills irrespective of the fact whether any increase/decrease in the index for relevant categories has taken place or not. In case there is delay in publication of bulletins (final figure), the provisional values as published can be considered for payments and arrears shall be paid/recovered on getting the final values.

2.17.9 PVC shall be applicable for the entire original contract period plus the extended period. However the Total Quantum of Price Variation amount payable/recoverable shall be regulated as follows:

i) For the portion of backlog attributable to the contractor, the PVC will be based on the average of the indices for the period of the original contract period.
ii) For the period of Force Majeure, the PVC will be limited to the indices applicable at the beginning of the force majeure period.
iii) For the portion of backlog attributable to BHEL, the PVC will be as per the indices applicable for the respective months
iv) The total amount of PVC shall not exceed 20% of the cumulatively executed contract value. Executed contract value for this purpose is exclusive of PVC, ORC, Supplementary/Additional Items and Extra works.

2.18 **INSURANCE**

2.18.1 BHEL/their customer shall arrange for insuring the materials/properties of BHEL/customer covering the risks during transit, storage, erection and commissioning.

2.18.2 It is the sole responsibility of the contractor to insure his materials, equipments, workmen, etc. against accidents and injury while at work and to pay compensation, if any, to workmen as per Workmen's compensation Act. The work will be carried out in a protected area and all the rules and regulations of the client /BHEL in the area of project which are in force from time to time will have to be followed by the contractor.

2.18.3 If due to negligence and or non-observation of safety and other precautions by the contractors, any accident/injury occurs to the property / manpower belong to third party, the contractor shall have to pay necessary compensation and other expense, if so decided by the appropriate authorities.

2.18.4 The contractor will take necessary precautions and due care to protect the material, while in his custody from any damage/ loss due to theft or otherwise till the same is taken over by BHEL or customer. For lodging / processing of insurance claim the contractor will submit necessary documents. BHEL will recover the loss including the deductible franchise from the contractor, in case the damage / loss is due to carelessness / negligence on the part of the contractor. In case of any theft of material under contractor's custody , matter shall be reported to police by the contractor immediately and copy of FIR and subsequently police investigation report shall be submitted to BHEL for taking up with insurance. However this will not relieve the contractor of his

contractual obligation for the material in his custody.

2.19 **STRIKES & LOCKOUT**

2.19.1 The contractor will be fully responsible for all disputes and other issues connected with his labour. In the event of the contractor's labour resorting to strike or the Contractor resorting to lockout and if the strike or lockout declared is not settled within a period of one month, BHEL shall have the right to get the work executed through any other agencies and the cost so incurred by BHEL shall be deducted from the Contractor's bills.

2.19.2 For all purposes whatsoever, the employees of the contractor shall not be deemed to be in the employment of BHEL

2.20 **FORCE MAJEURE**

The following shall amount to Force Majeure:-

2.20.1 Acts of God, act of any Government, War, Sabotage, Riots, Civil commotion, Police action, Revolution, Flood, Fire, Cyclones, Earth quake and Epidemic and other similar causes over which the contractor has no control.

2.20.2 If the contractor suffers delay in the due execution of the contractual obligation due to delays caused by force majeure as defined above, the agreed time of completion of the job covered by this contract or the obligations of the contractor shall be extended by a period of time equal to period of delay, provided that on the occurrence of any such contingency, the contractor immediately reports to BHEL in writing the causes of delay and the contractor shall not be eligible for any compensation.

2.21 **ARBITRATION & RECONCILIATION**

2.21.1 In case amicable settlement is not reached in the event of any dispute or difference arising out of the execution of the Contract or the respective rights and liabilities of the parties or in relation to interpretation of any provision by the Contractor in any manner touching upon the Contract, such dispute or difference shall (except as to any matters, the decision of which is specifically provided for therein) be referred to the sole arbitration of the arbitrator appointed by BHEL/In charge(Region).

The award of the Arbitrator shall be binding upon the parties to the dispute

Subject as aforesaid, the provisions of Arbitration and Reconciliation Act 1996 (India) or statutory modifications or re enactments thereof and the rules made there under and for the time being in force shall apply to the arbitration proceedings under this clause. The venue of the arbitration shall be the place from which the contract is issued or such other place as the Arbitrator at his discretion may determine

2.21.2 In case of Contract with Public Sector Enterprise (PSE) or a Government Department, the following shall be applicable :

In the event of any dispute or difference relating to the interpretation and application of the provisions of the Contract, such dispute or difference shall be referred to by either party to the arbitration of one of the arbitrators in the department of public enterprises. The award of the arbitrator shall be binding upon the parties to the dispute, provided, however, any party aggrieved by such award may make further reference for setting aside or revision of the award to the Law Secretary, Department of Legal Affairs, Ministry of Law and Justice, Government of India. Upon such reference the dispute shall be decided by the Law Secretary or the Special Secretary or Additional Secretary when so authorized by the Law Secretary, whose decision shall bind the parties hereto finally and conclusively.

2.21.3 The cost of arbitration shall be borne equally by the parties.

2.21.4 Work under the contract shall be continued during the arbitration proceedings

2.22 **RETENTION AMOUNT**

2.22.1 Retention Amount shall be 5% of executed contract value and shall be recovered at the rate of 5% from each Running Bill admitted, including PVC Bills.

2.22.2 Refund of Retention Amount shall be as follows:

i) 50% of retention amount along with 'Final Bill'

ii) Balance 50% of retention amount shall be retained towards 'Performance Guarantee for Workmanship' and shall become refundable after expiry of Guarantee period, provided all the defects noticed during the guarantee period have been rectified to the satisfaction of BHEL Site Engineer/BHEL Construction Manager, and after deducting all expenses/other amounts due to BHEL under the contract/other contracts entered into by BHEL with them. This portion of the retention amount can be released on commencement of the Guarantee period, on submission of equivalent Bank Guarantee.

2.23 **PAYMENTS**

Payments to Contractors are made in any one of the following forms

2.23.1 **Running Account Bills (RA Bills)**

i) These are for interim payments when the contracts are in progress. The bills for such interim payments are to be prepared by Contractor in prescribed formats (RA Bill forms).

ii) Payments shall be made according to the extent of work done as per measurements taken up to the end of the calendar month and in line with the terms of payments described in the Tender documents

iii) Recoveries on account of electricity, water, statutory deductions, etc are made as per terms of contract

iv) Full rates for the work done shall be allowed only if the quantum of work has been done as per the specifications stipulated in the contract. If the work is not executed as per the stipulated specifications, BHEL may ask the contractor to re do the work according to the required specifications, without any extra cost. However, where this is not considered necessary 'OR' where the part work is done due to factors like non-availability of material to be supplied by BHEL 'OR' non availability of fronts 'OR' non availability of drawings, fraction payment against full rate, as is considered reasonable, may be allowed with due regard for the work remaining to be done. BHEL decision in this regard will be final and

binding on the contractor.

v) In order to facilitate part payment, BHEL Site Engineer at his discretion may further split the contracted rates/percentages to suit site conditions, cash flow requirements according to the progress of work

2.23.2 **Final Bill**

Final Bill' is used for final payment on closing of Running Account for works or for single payment after completion of works. 'Final Bill' shall be submitted as per prescribed format after completion of works as per scope and upon material reconciliation, along with the following.

i) 'No Claim Certificate' by contractor
ii) Clearance certificates where ever applicable viz Clearance Certificates from Customer, various Statutory Authorities like Labour department, PF Authorities, Commercial Tax Department, etc
iii) Indemnity bond as per prescribed format

BHEL shall settle the final bills after deducting all liabilities of Contractor to BHEL

2.24 **PERFORMANCE GUARANTEE FOR WORKMANSHIP**

2.24.1 Even though the work will be carried out under the supervision of BHEL Engineers the Contractor will be responsible for the quality of the workmanship and shall guarantee the work done for a period of twelve months from the date of commencement of guarantee period as defined in Special Conditions of Contract, for good workmanship and shall rectify free of cost all defects due to faulty erection detected during the guarantee period. In the event of the Contractor failing to repair the defective works within the time specified by the Engineer, BHEL may proceed to undertake the repairs of such defective works at the Contractor's risk and cost, without prejudice to any other rights and recover the same from the Guarantee money.

2.24.2 BHEL shall release the guarantee money subject to the following

i) Contractor has submitted 'Final Bill'
ii) Guarantee period as per contract has expired
iii) Contractor has furnished 'No Claim Certificate' in specified format
iv) BHEL Site Engineer/Construction Manager has furnished the 'No Demand Certificate' in specified format
v) Contractor has carried out the works required to be carried out by him during the period of Guarantee and all expenses incurred by BHEL on carrying out such works is included for adjustment from the Guarantee money refundable.

2.25 **CLOSING OF CONTRACTS**

The Contract shall be considered completed and closed upon completion of all contractual obligations and settlement of Final Bill or completion of Guarantee period whichever is later. Upon closing of Contract, BHEL shall issue a completion certificate as per standard format, based on specific request of Contractor.

2.26 **REVERSE AUCTION**:

BHEL reserves the right to go for Reverse Auction for Price Bid Opening by BHEL appointed service provider, instead of opening the submitted sealed price bid in the conventional way. The Business Rules for Reverse Auction shall be as per BHEL guidelines issued from time to time.

2.27 **SUSPENSION OF BUSINESS DEALINGS**

BHEL reserves the right to take action against Contractors who either fail to perform or Tenderers/Contractor who indulge in malpractices, by suspending business dealings with them in

	line with BHEL guidelines issued from time to time.
2.28	**OTHER ISSUES**
2.28.1	Value of Non judicial Stamp Paper for Bank Guarantees and for Contract Agreement shall be not less than Rs 100/- unless otherwise required under relevant statutes.
2.28.2	In case of any conflict between the General Conditions of Contract and Special Conditions of Contract, provisions contained in the Special Conditions of Contract shall prevail.
2.28.3	Unless otherwise specified in NIT, offers from consortium/JVs shall not be considered.
2.28.4	BHEL may not insist for signing of Contract Agreements in respect of low value and short time period contracts like providing services for Hot water flushing, Chemical Cleaning, Transportation, etc

INDEX

SN	Description	Form No	Remarks
1.0	**Forms**		
1.1	Offer forwarding Letter/Submission of Tender	F-1 (Rev 00)	
1.2	Declaration by Authorised Signatory	F-2 (Rev 00)	
1.3	No Deviation Certificate	F-3 (Rev 00)	
1.4	Declaration confirming knowledge about Site Conditions	F-4 (Rev 00)	
1.5	Declaration for relation in BHEL	F-5 (Rev 00)	
1.6	Non Disclosure Certificate	F-6 (Rev 00)	
1.7	Bank Account Details for E-Payment	F-7 (Rev 00)	
1.8	Form for seeking clarifications	F-8 (Rev 00)	
1.9	Capacity Evaluation of Bidder for current Tender	F-9 (Rev 00)	
1.10	Contract Agreement	F-10 (Rev 00)	
1.11	Bank Guarantee for Security Deposit	F-11 (Rev 00)	
1.12	Bank Guarantee for ~~Interest Bearing Refundable~~ Advance	F-12 (Rev 00)	
1.13	Extension of Validity of Bank Guarantee	F-13 (Rev 00)	
1.14	Monthly Plan & Review with Contractors	F-14 (Rev 00)	
1.15	Monthly Performance Evaluation of Contractor	F-15 (Rev 01)	Revised
1.16	~~Evaluation of Contractor Performance (Quarterly)~~	~~F-16 (Rev 00)~~	Deleted
1.17	Evaluation of Contractor Performance (Annual)	F-17 (Rev 01)	Under revision ##
1.18	Evaluation of Contractor Performance for the Contract (Overall)	F-18 (Rev 01)	Under revision ##

SN	Description	Form No	Remarks
1.19	Milestone Completion Certificate	F-19 (Rev 00)	
1.20	Completion Certificate	F-20 (Rev 01)	Revised
1.21	Indemnity Bond	F-21 (Rev 00)	
1.22	Consortium Agreement	F-22 (Rev 00)	
1.23	Refund of Security Deposit	F-23 (Rev 00)	
1.24	Refund of Guarantee Money	F-24 (WAM-11)	
1.25	Power of Attorney for Submission of Tender/Signing Contract Agreement	F-25 (Rev 00)	
1.26	Analysis of Unit Rates Quoted	F-26 (Rev 00)	
1.27	RA Bill Format	WAM-6	
1.28	Final Bill Submission format with No Claim Certificate and No Demand Certificate	WAM-7	
1.29	PROFORMA FOR PERFORMANCE BANK GUARANTEE		
1.30	BANK GUARANTEE FOR SD CUM PBG BOND		
2.0	**Procedures**		
2.1	Procedure and Business Rules for Reverse Auction	As per Company Policy	
2.2	Integrity Pact	As per Company Policy	
3.0	**Customer specific procedures**		
3.1			

• BANK GUARANTEE FORMATS FOR "RELEASE OF AMOUNTS WITHED/ LIQUIDATED DAMAGES AMOUNT", "SUPPLY FREE ISSUE MATERIAL" & "EARNEST MONEY" IS ALSO GIVEN.

: will be released later

Form No: F-01 (Rev 00)

OFFER FORWARDING LETTER / TENDER SUBMISSION LETTER

(To be typed and submitted in the Letter Head of the Company/Firm of Bidder)

Offer Reference No:……. Date:……

To,

(Write Name & Address of Officer of BHEL inviting the Tender)

Dear Sir,

Sub : Submission of Offer against Tender Specification No: ……

I/We hereby offer to carry out the work detailed in the Tender Specification issued by Bharat Heavy Electricals Limited, Power Sector-…… ……., in accordance with the terms and conditions thereof.

I/We have carefully perused the following listed doc uments connected with t he above work and agree to abide by the same.

1. Amendments/Clarifications/Corrigenda/Errata/etc issued in respect of the Tender documents by BHEL
2. Notice Inviting Tender (NIT)
3. Price Bid
4. Technical Conditions of Contract
5. Special Conditions of Contract
6. General Conditions of Contract
7. Forms and Procedures

Should our Offer be accepted by BHEL for Award, I/we further agree to furnish 'Security Deposit' for the work as provided for in the Tender Conditions within the stipulated time as may be indicated by BHEL.

I/We further agree to execute all the works referred to in the said Tender documents upon the terms and conditions contained or referred to therein and as detailed in the appendices annexed thereto.

I/We have deposited/depositing herewith the requisite Earnest Money Deposit (EMD) as per details furnished in the Check List.

Authorised Representative of Bidder
Signature :
Name :
Address :

Place:
Date:

Form No: F-02 (Rev 00)

DECLARATION BY AUTHORISED SIGNATORY OF BIDDER

(To be typed and submitted in the Letter Head of the Company/Firm of Bidder)

To,

(Write Name & Address of Officer of BHEL inviting the Tender)

Dear Sir,

Sub : **Declaration by Authorised Signatory**
Ref : 1) NIT/Tender Specification No: ……,
2) All other pertinent issues till date

I/We, hereby certify that all the information and data furnished by me with regard to the above Tender Specification are true and complete to the best of my knowledge. I have gone through the specifications, conditions, stipulations and all other pertinent issues till date, and agree to comply with the requirements and Intent of the specification.

I further certify that I am authorised to represent on behalf of my Company/Firm for the above mentioned tender and a valid Power of Attorney to this effect is also enclosed.

Yours faithfully,

(Signature, Date & Seal of Authorized Signatory of the Bidder)

Date:

Enclosed : Power of Attorney

Form No: F-03 (Rev 00)

NO DEVIATION CERTIFICATE

(To be typed and submitted in the Letter Head of the Company/Firm of Bidder)

To,

(Write Name & Address of Officer of BHEL inviting the Tender)

Dear Sir,

Sub : **No Deviation Certificate**
Ref : 1) NIT/Tender Specification No: ……,
2) All other pertinent issues till date

We hereby confirm that we have not changed/ modified/materially altered any of the tender documents as downloaded from the website/ issued by BHEL and in case of such observance at any stage, it shall be treated as null and void.

We also hereby confirm that we have neither set any Terms and Conditions and nor have we taken any deviation from the Tender conditions together with other references applicable for the above referred NIT/Tender Specification.

We further confirm our unqualified acceptance to all Terms and Conditions, unqualified compliance to Tender Conditions, Integrity Pact (if applicable) and acceptance to Reverse Auctioning process.

We confirm to have submitted offer in accordance with tender instructions and as per aforesaid references.

Thanking you,

Yours faithfully,

(Signature, date & seal of authorized representative of the bidder)

Form No: F-04 (Rev 00)

DECLARATION CONFIRMING KNOWLEDGE ABOUT SITE CONDITIONS

(To be typed and submitted in the Letter Head of the Company/Firm of Bidder)

To,

(Write Name & Address of Officer of BHEL inviting the Tender)

Dear Sir,

Sub : **Declaration confirming knowledge about Site conditions**
Ref : 1) NIT/Tender Specification No: ……,
2) All other pertinent issues till date

I/We, _____ hereby declare and confirm that we have visited the Pr oject Site as referred in BHEL Tender Specificat ions and acquired full knowledge and information about the Site conditions including Wage structure, Industrial Climate, the Law & Order and other conditions prevalent at and around the Site. We further confirm that the above information is true and correct and we shall not raise any claim of any nature due to lack of knowledge of Site conditions.

I/We, hereby offer to c arry out work as detailed in abov e mentioned Tender Specification, in accordance with Terms & Conditions thereof.

Yours faithfully,

(Signature, Date & Seal of Authorized
Representative of the Bidder)

Date :

Place:

Form No: F-05 (Rev 00)

DECLARATION FOR RELATION IN BHEL

(To be typed and submitted in the Letter Head of the Company/Firm of Bidder failing which the offer of Bidder is liable to be summarily rejected)

To,

(Write Name & Address of Officer of BHEL inviting the Tender)

Dear Sir,

Sub : **Declaration for relation in BHEL**
Ref : 1) NIT/Tender Specification No: ……,

I/We hereby submit the followi ng information pertaining to relation/relatives of Proprieter/Partner(s)/Director(s) employed in BHEL

Tick(√) any one as applicable:

1. The Proprieter, Partner(s), Director(s) of our Company/F irm DO NOT have any relation or relatives employed in BHEL

   OR

2. The Proprieter, Partner(s), or Director(s) of our Company/Firm HAVE relation/relatives employed in BHEL and their particulars are as below:
   (i)

   (ii)

Signature of the Authorised Signatory

Note:

1. Attach separate sheet, if necessary.
2. If BHEL Management comes to know at a later date that the information furnished by the Bidder is false, BHEL reserves the right to take suitable against the Bidder/Contractor.

Form No: F-06 (Rev 00)

NON DISCLOSURE CERTIFICATE
(To be typed and submitted in the Letter Head of the Company/Firm of Bidder)

NON DISCLOSURE CERTIFICATE

I/We understand that BHEL PS __ is committed to Information Security Management System as per their Information Security Policy.

Hence, I/We M/s…….
who are subm itting offer for providing services to BHEL PS __ against Tender Specification No:_____ _____,
hereby undertake to comply with the following in line with Information Security Policy of BHEL PS ___, _____

- To maintain confidentiality of documents & information which shall be used during the execution of the Contract.
- The documents & information shall not be revealed to or shared with third party which shall not be in the business interest of BHEL PS__.

(Signature, date & seal of Authorized Signatory of the bidder)

Date:

Form No: F-07 (Rev 00)

BANK ACCOUNT DETAILS FOR E-PAYMENT

(To be given on Letter head of the Company /Firm of Bidder, and **ENDORSED (SIGNED & STAMPED) BY THE BANK** to enable BHEL release payments through Electronic Fund Transfer (EFT/RTGS)

---

1. Beneficiary Name :

2. Beneficiary Account No. :

3. Bank Name & Branch :

4. City/Place :

5. 9 digit M ICR Code of Bank Branch :

6. IFSC Code of Bank Branch :

7. Beneficiary E-mail ID :
   (for payment confirmation)

NOTE: In case Bank endorsed certificate regarding above has already been submitted earlier, Kindly submit photocopy of the same

Form No: F-08 (Rev 00)

FORMAT FOR SEEKING CLARIFICATION

(To be typed and submitted in the Letter Head of the Company/Firm of Bidder)

To,

(Write Name & Address of Officer of BHEL inviting the Tender)

Dear Sir,

Sub : **Request for Clarification**
Ref : 1) NIT/Tender Specification No: ……,
2) All other pertinent issues till date

Sl no	Reference clause of Tender Document	Existing provision	Bidder's query	BHEL's clarification
1				
2				
□				

Yours faithfully,

(Signature, date & seal of Authorized
Representative of the Bidder)

F□r□ N□: F-0□ (R□□ 00)

CAPACITY E□ALUATION OF BIDDERS FOR CURRENT TENDER

SL NO.	DESCRIPTION OF WORK (S□□ □□r □□ T□□d□r□d S□□□□)	WORK ORDER REF □ DATE	CONTRACT □ALUE (R□. LACS)	CUSTOMER NAME □ ADDRESS	CURRENT STATUS OF THE □OB ALONG WITH LATEST MILE STONE COMPLETED	□AGE OF WORK COMPLETED	□ALUE OF BALANCE WORK (R□. L□□)
1							
2							
3							
4							
5							

NOTES:

1. BIDDERS ARE REQUIRED TO FURNISH ALL THE JOBS OF SIMILAR NATURE WHICH THEY ARE EXECUTING (IN PROGRESS) AT THE TIME OF SUBMISSION OF TENDER, AS PER ABOVE FORMAT.

2. BIDDERS HEREBY UNDERTAKE THAT THEY HAVE FURNISHED THE DETAILS SOUGHT AS PER POINT NO. 1 IN TOTALITY AND THAT THE DETAILS FURNISHED IS COMPLETE IN ALL RESPECT.

3. BHEL WILL TAKE APPROPRIATE ACTION AS DEEMED FIT , IN CASE, IT IS FOUND AT A LATER DATE THAT THE CONTRACTOR HAD SUPPRESSED THE FACTS AND HAVE NOT FURNISHED THE CORRECT & COMPLETE INFORMATIONS.

Signature

DATE :
PLACE:

Name, Designation & Seal of Bidder

CONTRACT AGREEMENT Form No: F-10 (Rev 00)

BHARAT HEAVY ELECTRICALS LIMITED
(A Government of India Undertaking)
Power Sector – ..... Region

CONTRACT AGREEMENT

AGREEMENT NO._____ _____

NAME OF WORK	
NAME OF THE CONTRACTOR WITH FULL ADDRESS	
VALUE OF WORK AWARDED	
LETTER OF INTENT NO.	
TIME ALLOTTED FOR COMPLETING THE WORK (DATE OF COMPLETION)	

_____ _____

SIGNATURE OF CONTRACTOR **(SIGNATURE OF BHEL OFFICER)**

CONTRACT AGREEMENT

THIS AGREEMENT MADE THIS _____DAY OF_____ between BHARAT HEAVY ELECTRICALS LIMITED (A Government of India Enterprise) a Company incorporated under the Companies Act, 1956, having its Registered Office at BHEL House, Siri Fort New Delhi- 110049 (herein after called BHEL) of the ONE PART.

AND

M/S _____
_____ (hereinafter called the `Contractor') of the SECOND PART.

WHEREAS M/s ----------state that they have acquired and possess extensive experience in the field of ----------

And Whereas in response to an Invitation to Tender No. ---------- issued by BHEL for execution of ---------- the contractor submitted their offer No.----------dated ----------And whereas BHEL has accepted the offer of the Contractor on terms and conditions specified in the Letter of Intent No.---------- ---------- dated ----------read with the references cited therein.

THIS AGREEMENT WITNESSES AND it is hereby agreed by and between the parties as follows:

1. That the contractor shall execute the work of ---------- ----------and more particularly described in Tender Specification No ----------including Drawings and Specifications (hereinafter called the said works) in accordance with and subject to terms and conditions contained in these presents, instructions to Tenderers, General Conditions of Contract, Special Conditions, Annexures, Letter of Intent dated ----------and such other instructions, Drawings, Specifications given to him from time to time by BHEL.

2. The Contractor is required to furnish to BHEL Security deposit in the form of cash/ approved securities/ Bank Guarantee valid upto ---------- for a sum of Rs.---------- towards satisfactory performance and completion of the Contract.

3. The Contractor has furnished a Bank Guarantee bearing no.----------dated ----------for a sum of Rs.----------executed by ---------- ---------- in favour of BHEL towards Security Deposit valid upto ---------

OR

The Contractor has furnished to BHEL an initial Security Deposit of Rs.----------in the form of cash / approved Securities/ B.G No.---------- dated ---------- for Rs.---------- executed by ---------- ---------- in favour of BHEL valid upto --- ---------- and has agreed for recovery of the balance security deposit by BHEL @ 10% of the value of work done from each running bill till the entire Security Deposit is recovered.

OR

The contractor has furnished to BHEL an init ial Security Deposit of Rs.-----(Rs.----------- vide Bank draft No.--- ----------dated ----------and by adjusting EMD of Rs.---------- submitted vide Bank dr aft No.---------- dt.---------) and has agreed for recovery of balance Security Deposit by BHEL @ 10% of the value of work done from each running bill till the entire security deposit is recovered.

4. The Contractor hereby agrees to extend the validity of th e Bank Gua rantee for such further period or periods as may be required by BHEL and if the Contractor fails to obtain such extension(s) from the Bank, th e Contractor, shall pay forthwith or accept reco very of Rs.---------- from the bills in one installment and the contractor further agrees that failure to e xtend the validity of th e Bank Guarantee or failure to p ay the aforesaid amount in the manner specified above shall constitute breach of contract. In addition to above, BHEL shall be entitled to take such action as deemed fi t and prop er for recovering the said sum of Rs.----------

OR

In case the contractor furnishes the bank guarantee at a later date the contractor hereby agrees to extend the validity of bank guarantee for such further period or periods as may be required by BHEL and if the cont ractor fails to obtain such extension(s) from the bank, the contractor shall pay forthwith o r accept recovery of the amount of bank guar antee given in lieu of security deposit from the bill s in one installment and the contractor further agrees that failure to extend the validity of bank guarantee or failure to pay the aforesaid amount in t he manner specified above shall constitute bre ach of contract. In addition to above, BHEL shall be entitled to take such action as deemed fit and pro per for recovering the said sum.

5. That in consideration of the payments to be made to the Contractor by BHEL in accordance with this Agreement the Contractor hereby covenants and undertakes with BHEL that they shall execute, construct, complete the works in conformity, in all respe cts, with the terms and conditions specified in this Agreement and the documents governing the same.

6. That the Contractor sha ll be deemed to have carefully exa mined this Agreement and the documents governing the same an d also to h ave satisfied himself a s to the nature and character of the Works to be executed by him.

7. That t he Contractor shall carr y out and c omplete the execution of the said works to the entire satisfaction of the Engineer or such ot her officer a uthorised by BHEL, wit hin the agreed time schedule, the time of completion being the essence of the Contract.

8. That BHEL shall, after proper scrutiny of the bills submitted by the Contractor, pay to hi m during the progress of the said works such su m as determined by BHEL in accordance with this Agreement.

9. That this Agreement shall be deemed to have come into force from -------- the d ate on which the letter of intent has been issued to the Contractor.

10. That whenever under this contract or otherwise, any sum of money shall be recoverable from or payable by the Contractor, the same may be deducted in the manner as set out in the General Conditions of Contract or other conditions governing this Agreement.

11. That all charges on account of Octroi, Terminal and other taxes including sales tax or other duties on material obtained for execution of the said works shall be borne and paid by the Contractor.

12. That BHEL shall be entitled to deduct from the Contractor's running bills or otherwise Income Tax under Section 194 (C) of the Income Tax Act, 1961.

13. That BHEL shall be further entitled to recover from the running bills of the Contractor or otherwise such sum as may be determined by BHEL from time to time in respect of consumables supplied by BHEL, hire charges for tools and plants issued (Where applicable) and any other dues owed by the Contractor.

14. That it is hereby agreed by and between the parties that non- exercise, forbearance or omission of any of the powers conferred on BHEL and /or any of its authorities will not in any manner constitute waiver of the conditions hereto contained in these presents and the liability of the Contractor with respect to compensation payable to BHEL or Contractor's obligations shall remain unaffected.

15. It is clearly understood by and between the parties that in the event of any conflict between the Letter of Intent and other documents governing this Agreement, the provisions in the Letter of Intent shall prevail.

16. The following documents

1. Invitation to Tender No----------
   and the documents specified therein.
2. Contractor's Offer No----------
   dated----------.
3. _____
4. _____
5. _____
6. Letter of Intent No_____ dated_____.
7. _____

shall also form part of and govern this Agreement.

IN WITNESS HEREOF, the parties hereto have respectively set their signatures in the presence of

WITNESS (CONTRACTOR)

(to be signed by a person holding
1. a valid Power of Attorney)

2.

WITNESS (For and on behalf of BHEL)

1.

2.

PROFORMA OF BANK GUARANTEE (in lieu of SECURITY DEPOSIT)

In consideration of the Bharat Heavy Electricals Limited (hereinafter referred to as the 'Employer' which expression shall unless repugnant to the context or meaning thereof, include its successors and permitted assigns) incorporated under the Companies Act, 1956 and having its registered office at BHEL House, Siri Fort, Asiad, New Delhi – 110049 through its Unit at Bharat Heavy Electricals Limited, Power Sector Eastern Region, BHEL Bhawan, Plot No 9/1, DJ Block, Sector-II, Salt lake City, Kolkata – 700091 having agreed to exempt (Name of the Vendor / Contractor / Supplier) having its registered office at_____ [1] (hereinafter called the said Contractor which term includes supplier), from demand under the terms and conditions of the Contract reference No._____ [2] dated _____[2] valued at Rs……[2] (Rupees ----------)[2] for <Nature of the Work>[3] (hereinafter called the said Contract) of Security Deposit for the due fulfilment by the said contractor of the terms and conditions contained in the said Contract, on production of a Bank Guarantee for Rs._____ [4] (Rupees _____ only), we ____(indicate the name and address of the Bank) having its Head Office at _____(address of the head Office) (hereinafter referred to as the Bank) at the request of _____ [Name of Contractor(s)] do hereby undertake to pay to the Employer an amount not exceeding Rs._____ in the event of any breach by the said Contractor(s) of any of the terms and conditions contained in the said Contract.

We, _____(indicate the name of the Bank), do hereby undertake to pay the amounts due and payable under this guarantee without any demur, merely on a demand from the Employer. Any such demand made on the bank, shall be conclusive as regards the amount due and payable by the Bank under this guarantee. However, our liability under this guarantee shall be restricted to an amount not exceeding Rs._____.

We undertake to pay to the Employer any money so demanded notwithstanding any dispute or disputes raised by the Contractor(s) in any suit or proceeding pending before any Court or Tribunal relating thereto our liability under this present being absolute and unequivocal.

The payment so made by us under this guarantee shall be a valid discharge of our liability for payment hereunder and the Contractor(s) shall have no claim against us for making such payment.

We, further agree that the guarantee herein contained shall remain in full force and effect during the period that would be taken for the performance of the said Contract and that it shall continue to be enforceable till all the dues of the Employer under or by virtue of the said Contract have been fully paid and its claim satisfied or discharged or till _____ [5] or till the office/Department/Division of Bharat Heavy Electricals Limited certifies that the terms and conditions of the said Contract have been fully and properly carried out by the said contractor(s) and also including the satisfactory performance of the equipment during guarantee period and accordingly discharges this guarantee. Unless a demand or claim under this guarantee is made on us in writing on or before the _____[6], (3 months more than the present date of validity of Bank Guarantee) we shall be discharged from all the liability under this guarantee thereafter.

We, ____(indicate the name of the Bank)_____further agree with the Employer that the Employer shall have the fullest liberty without our consent and without affecting in any manner our obligations hereunder to vary any of the terms and conditions of the said Contract or to extend time of performance by the said contractor(s) from time to time or to postpone for any time or from time to time any of the powers exercisable by the Employer against the said contractor(s) and to forbear or enforce any of the terms and conditions relating to the said Contract and we shall not be relieved from our liability by any reason of any such variation or extension being granted to the said contractor(s) or for any forbearance, act or omission on the part of the Employer or any indulgence by the Employer to the said contractor(s) or by any such matter or thing whatsoever which under the law relating to sureties would but for this provision have effect of so relieving us.

This guarantee will not be discharged due to the change in the constitution of the Bank or the Contractor(s).
We,……. BANK lastly undertake not to revoke this guarantee during its currency except with the previous consent of the Employer in writing.

Notwithstanding anything to the contrary contained hereinabove:

a) The liability of the Bank under this Guarantee shall not exceed…… [7]
b) This Guarantee shall be valid up to ……[8]
c) Unless the Bank is served a written claim or demand on or before _____[9] (3 months more than the present date of validity of Bank Guarantee) all rights under this guarantee shall be forfeited and the Bank shall be relieved and discharged from all liabilities under this guarantee irrespective of whether or not the original bank guarantee is returned to the Bank.

We, ____(indicate the name of the Bank)____ lastly undertake not to revoke this guarantee during its currency except with the previous consent of the Employer in writing.

Any claim or dispute arising under the terms of this document shall only be enforced or settled in the courts of at Kolkata only.

Date _____ Day of _____

for____(indicate the name of the Bank)__

(Signature of Authorised signatory)

[1] *NAME AND ADDRESS OF THE VENDOR /CONTRACTOR / SUPPLIER .*

[2] *DETAILS ABOUT THE NOTICE OF AWARD/CONTRACT REFERENCE*

[3] *PROJECT/SUPPLY DETAILS*

[4] *BG AMOUNT IN FIGURES AND WORDS*

[5] *VALIDITY DATE*

[6] *DATE OF EXPIRY OF CLAIM PERIOD*

[7] *BG AMOUNT IN FIGURES AND WORDS.*

[8] *VALIDITY DATE*

[9] *DATE OF EXPIRY OF CLAIM PERIOD*

Note:

1. **Units are advised that expiry of claim period may be kept 2/3 months after validity date.**
2. **In Case of Bank Guarantees submitted by Foreign Vendors-**
   - **a.** **From Nationalized/Public Sector / Private Sector/ Foreign Banks (BG issued by Branches in India)** can be accepted subject to the condition that the Bank Guarantee should be enforceable in the town/city or at nearest branch where the Unit is located i.e. Demand can be presented at the Branch located in the town/city or at nearest branch where the Unit is located.
   - **b.** **From Foreign Banks (wherein Foreign Vendors intend to provide BG from local branch of the Vendor country's Bank)**
   - **b.1** In such cases, in the Tender Enquiry/ Contract itself, it may be clearly specified that Bank Guarantee issued by **any of the Consortium Banks only** will be accepted by BHEL. As such, Foreign Vendor needs to make necessary arrangements for issuance of Counter-Guarantee by Foreign Bank in favour of the Indian Bank (BHEL's Consortium Bank). It is advisable that all charges for issuance of Bank Guarantee/ counter- Guarantee should be borne by the Foreign Vendor. The tender stipulation should clearly specify these requirements.

b.2 **In case, Foreign Vendors intend to provide BG from** Overseas Branch of our Consortium Bank (e.g. if a BG is to be issued by SBI Frankfurt), the same is acceptable. However, the procedure at **sl.no. b.1** will required to be followed.

b.3 The BG issued may preferably be subject to Uniform Rules for Demand Guarantees (URDG) 758 (as amended from time to time). In case, of Foreign Vendors, the BG Format provided to them should clearly specify the same.

b.4 The BG should clearly specify that the demand or other document can be presented in electronic form.

BANK GUARANTEE FOR ADVANCE

Bank Guarantee No:

Date:

To

NAME

& ADDRESSES OF THE BENEFICIARY

Dear Sirs,

In consideration of the Bharat Heavy Electricals Limited (hereinafter referred to as the 'Employer' which expression shall unless repugnant to the context or meaning thereof, include its successors and permitted assigns) incorporated under the Companies Act, 1956 and having its registered office at BHEL House, Siri Fort, Asiad, New Delhi – 110049 through its Unit at Bharat Heavy Electricals Limited, Power Sector Eastern Region, BHEL Bhawan, Plot No 9/1, DJ Block, Sector-II, Salt lake City, Kolkata – 700091 having awarded to (Name of the Vendor / Contractor / Supplier) having its registered office at_____ [1] (hereinafter called "the Contractor" which expression shall include its successors and permitted assigns) a contract Ref No……dated ……[2]valued at Rs……(Rupees ----------) for <Nature of Work> [3](hereinafter called the 'Contract')

AND WHEREAS the Employer has agreed to advance to the Contractor, a sum of Rs…….. (Rupees…….. only), equivalent to _____% of the said value of the Contract (hereinafter called "the said Advance"), upon the condition, that the said Advance shall be secured by undertaking guarantee for Rs ---------- (Rupees ----------)[4] from a Bank as hereinafter appearing.

We, ……, (hereinafter referred to as the Bank), having registered/Head office at ……. and a branch at …… being the Guarantor under this Guarantee, hereby irrevocably and unconditionally undertake to forthwith and immediately pay to the Employer without any demur, merely on your first demand any sum or sums upto a maximum amount but not exceeding Rs ---------- (Rupees ----------).

Any such demand made on the Bank shall be conclusive as regards the amount due and payable by the Bank under this guarantee. However, our liability under this guarantee shall be restricted to an amount not exceeding Rs. _____

We undertake to pay to the Employer any money so demanded notwithstanding any dispute or disputes raised by the Contractor/ Supplier in any suit or proceeding pending before any Court or Tribunal relating thereto our liability under this present being absolute and unequivocal.

The payment so made by us under this Guarantee shall be a valid discharge of our liability for payment hereunder and the Contractors/Supplier shall have no claim against us for making such payment.

We the ……Bank further agree that the guarantee herein contained shall remain in full force and effect during the period that would be taken for the performance of the said Contract and that it shall continue to be enforceable till all the dues of the Employer under or by virtue of the said Contract have been fully paid and its claims satisfied or discharged.

We …….. Bank further agree that the Employer shall have the fullest liberty without our consent and without affecting in any manner our obligations hereunder to vary any of the terms and conditions of the said Contract or to extend time of performance by the said Contractor/Supplier from time to time or to postpone for any time or from time to time any of the powers exercisable by the Employer against the said Contractor/Supplier and to forbear or enforce any of the terms and conditions relating to the said Agreement and we shall not be relieved from our liability by reason of any such variation, or extension being granted to the said Contractor/Supplier or for any forbearance, act or omission on the part of the Employer or any indulgence by the Employer to the said Contractor/Supplier or by any such matter or thing whatsoever which under the law relating to sureties would but for this provision have effect of so relieving us.

The Bank also agrees that the Employer at its option shall be entitled to enforce this Guarantee against the Bank as a principal debtor, in the first instance without proceeding against the Contractor and notwithstanding any security or other guarantee that the Employer may have in relation to the Contractor's liabilities.

This Guarantee shall remain in force upto and including…….. [5] and shall be extended from time to time on the request of the Employer for such period as may be desired by the Employer.

This Guarantee shall not be determined or affected by liquidation or winding up, dissolution or change of constitution or insolvency of the Contractor/Supplier but shall in all respects and for all purposes be binding and operative until payment of all money payable to the Employer in terms hereof. However, unless a demand or claim under this Guarantee is made on us in writing on or before the ……[6] (3 months more than the present date of validity of Bank Guarantee) we shall be discharged from all liabilities under this Guarantee.

We, …… BANK lastly undertake not to revoke this guarantee during its currency except with the previous consent of the Employer in writing.

Notwithstanding anything to the contrary contained hereinabove:

a) The liability of the Bank under this Guarantee shall not exceed…… [7]
b) This Guarantee shall be valid up to ……[8]
c) Unless the Bank is served a written claim or demand on or before _____ [9] (3 months more than the present date of validity of Bank Guarantee) all rights under this guarantee shall be forfeited and the Bank shall be relieved and discharged from all liabilities under this guarantee irrespective of whether or not the original bank guarantee is returned to the Bank

We, _____ Bank, have power to issue this Guarantee under law and the undersigned as a duly authorized person has full powers to sign this Guarantee on behalf of the Bank.

Any claim or dispute arising under the terms of this document shall only be enforced or settled in the courts of at Kolkata only.

For and on behalf of
(Name of the Bank)

Date…….
Place of Issue…….

[1] NAME OF VENDOR /CONTRACTOR / SUPPLIER

[2] DETAILS ABOUT THE NOTICE OF AWARD/CONTRACT REFERENCE

[3] PROJECT/SUPPLY DETAILS

[4] BG AMOUNT IN FIGURES AND WORDS

[5] VALIDITY DATE

[6] DATE OF EXPIRY OF CLAIM PERIOD

[7] BG AMOUNT IN FIGURES AND WORDS

[8] VALIDITY DATE

[9] DATE OF EXPIRY OF CLAIM PERIOD

Note:

1. **Units are advised that expiry of claim period may be kept 2/3 months after validity date.**

2. **In Case of Bank Guarantees submitted by Foreign Vendors-**

   a. **From Nationalized/Public Sector / Private Sector/ Foreign Banks (BG issued by Branches in India)** can be accepted subject to the condition that the Bank Guarantee should be enforceable in the town/city or at nearest branch where the Unit is located i.e. Demand can be presented at the Branch located in the town/city or at nearest branch where the Unit is located.

   b. **From Foreign Banks (wherein Foreign Vendors intend to provide BG from local branch of the Vendor country's Bank)**

   b.1 In such cases, in the Tender Enquiry/ Contract itself, it may be clearly specified that Bank Guarantee issued by **any of the Consortium Banks only** will be accepted by BHEL. As such, Foreign Vendor needs to make necessary arrangements for issuance of Counter- Guarantee by Foreign Bank in favour of the Indian Bank (BHEL's Consortium Bank). It is advisable that all charges for issuance of Bank Guarantee/ counter- Guarantee should be borne by the Foreign Vendor. The tender stipulation should clearly specify these requirements.

   b.2 **In case, Foreign Vendors intend to provide BG from** Overseas Branch of our Consortium Bank (e.g. if a BG is to be issued by SBI Frankfurt), the same is acceptable. However, the procedure at **sl.no. b.1** will required to be followed.

   b.3 The BG issued may preferably be subject to Uniform Rules for Demand Guarantees (URDG) 758 (as amended from time to time). In case, of Foreign Vendors, the BG Format provided to them should clearly specify the same.

   b.4 The BG should clearly specify that the demand or other document can be presented in electronic form.

Form No: F-13 (Rev 00)

FORM for EXTENSION OF VALIDITY OF BANK GUARANTEE

1. **To be typed on non judicial Stamp Papers of value as applicable in the State of India from where the BG has been issued or the State of India where the BG shall be operated**
2. **The non judicial stamp papers shall be purchased in the name of the Party on whose behalf the BG is being issued or the BG issuing Bank**

BANK GUARANTEE No: Date:……..

To

(Write Designation and Address of Officer of BHEL inviting the Tender)

Dear Sir

Sub : Validity of Bank Guarantee No:……. Dated ……. for ……. Rs …… in favour of yourself, expiry date ……., on account of M/s …… in respect of Contract Number..……., (herein after called the Original bank Guarantee)

At the request of M/s……., we …….. Bank, having its branch Office at …….. and having Head office at ……, do hereby extend our liability under the above mentioned Bank Guarantee number…….. dated …… for a further period of ……..Months/years from …… to expire on ……..

Except as provided above, all other terms and conditions of the Original Bank Guarantee No ……. Dated…… shall remain unaltered and binding on us.

Kindly treat this extension as an integral part of the original Bank Guarantee to which it would be attached.

Yours faithfully

Signature…….
Name & Designation……..
Power of Attorney/Signing Power No
Seal of Bank

Project		**Vendor**			**Package/Unit**	
Sl. No.	**Parameter for Measurement**	**Classification**	**Max Score**	**Score Obtained**	**Measurement Key/Scheduled date**	**Supporting Documents**
#1.01	Cumulative number of days in the month, the nominated Quality Officer or his authorised nominee was not available	QUALITY	1.5		Quality Officer or his authorised nominee should be available for all the days of working at site	Daily Log Book entry/Incident Registers/letter references
#1.02	Number of instances of non- compliance wrt FQP, Standard Drawings, Specifications, E&C Manuals etc.	QUALITY	1.5		No deviation from FQP, Standard Drawings, Specifications, E&C Manuals etc. is allowed without BHEL Engineer's approval.	Daily Log Book entry/Incident Registers/letter references
#1.03	Percentage submission of test certificates for batches of welding electrodes, cement, sand, aggregate, consumable, Paints etc. as applicable for this month OR In case of MM & MH package, monthly checks for Storage/Preservation of material.	QUALITY	1		Submission of 100% Test certificates for materials as per FQP is mandatory. MM & MH package: Storage/Preservation as per manual/procedure.	Daily Log Book entry/Incident Registers/letter references
#1.04	Number of incidences of improper storage & preservation (not in accordance to the guidelines of BHEL MUs or approved FQP) of materials, consumables (viz. gases, welding electrodes & fluxes, fuel etc.) & bought-out items (paints, fasteners etc.) under the custody of the contractor	QUALITY	1		Total number of non-compliances	Daily Log Book entry/Incident Registers/letter references
#1.05	Rework/ Rejection instances in a month necessitated due to deviation from Standard Drawings /Specifications /Manuals /E&C procedures /FQPs or due to Poor Workmanship by contractor	QUALITY	2		Reworks/ Rejection should be as minimum as possible. Total number of reworks/ rejections due to reasons attributable to contractor.	Daily Log Book entry/Incident Registers/letter references
#1.06	Delay in preparation & submission of signed protocols / log sheets / site register / NDT test reports as per approved FQP/ Qualified Welder List along with photocopies of Welder ID cards / Welder Performance Evaluation records etc. in the month OR in case of MM / MH package reconciliation statement / verification report.	QUALITY	1		Within 2 days of measurements taken or within first 3 working days of next month, as advised by BHEL Engineer	Daily Log Book entry/Incident Registers/letter references
#1.07	Number of instances for Major equipment/product failure due to negligence/improper work/poor workmanship by contractor	QUALITY	1		No such event should happen	Daily Log Book entry/Incident Registers/letter references
#1.08	Total number of complaints received in the month on the quality of finish / aesthetics	QUALITY	1		Total number of non-compliances	Daily Log Book entry/Incident Registers/letter references

Project		**Vendor**			**Package/Unit**	
Sl. No.	**Parameter for Measurement**	**Classification**	**Max Score**	**Score Obtained**	**Measurement Key/Scheduled date**	**Supporting Documents**
#2.01	Cumulative number of days of delay in submission of Plan FOR THE MONTH supported by deployment plan of Major T&Ps and Manpower (as per Form F-14) and relevant construction/layout drawings - like A4 plan / elevation views of plan status for structures / pressure parts/Civil Works, Piping isometrics for piping, Layout / PID / System reference sketch, Unloading / storage plans etc.as applicable.	PERFORMANCE	5		Number of days delayed from second working day of the month	Daily Log Book entry/Incident Registers/letter references
#2.02	Percentage of timely submission of Daily Reports for Progress of work, Resources, Consumables etc.	PERFORMANCE	1.5		Percentage of timely submission of daily reports/ Scheduled date is successive next day for each day	Daily Log Book entry/Incident Registers/letter references
#2.03	Number of days delayed for submission of FQP log sheets / protocols / Monthly Progress Reports for the work executed during the month under measurement	PERFORMANCE	1.5		Number of days delayed/Scheduled date is first 2 working days of next month	Daily Log Book entry/Incident Registers/letter references
#2.04	Percentage Shortfall attributable to contractor w.r.t. “Plan - Shortfall attributable to BHEL” for the month as per Form-14	PERFORMANCE	35		As per Part-A of Form-14	Progress review formats
#2.05	Number of days delayed in submission of Running bills with complete supporting documents (including updated reconciliation statement of BHEL issued material) for the month	PERFORMANCE	2		Number of days delayed / Scheduled date is 7th day of next month	Daily Log Book entry/Incident Registers/letter references
#2.06	Number of times the Top Management of contractor did not respond to critical issues of site, for the month	PERFORMANCE	1		Total number of instances	Daily Log Book entry/Incident Registers/letter references
#2.07	Cumulative number of days in the month the works were stopped / refused on interpretation of contract clauses/scope due to tendency of taking undue advantage by interpreting contract clauses in their favour	PERFORMANCE	2		Cumulative number of days lost	Daily Log Book entry/Incident Registers/letter references
#2.08	Number of times rework was refused by contractor	PERFORMANCE	1		Total number of non-compliances	Daily Log Book entry/Incident Registers/letter references

Project		**Vendor**			**Package/Unit**	
Sl. No.	**Parameter for Measurement**	**Classification**	**Max Score**	**Score Obtained**	**Measurement Key/Scheduled date**	**Supporting Documents**
#2.09	Cumulative number of days in the month recording / logging was not done in daily log / history register / hindrance register / soft form in a PC maintained at BHEL Site Office	PERFORMANCE	1		Cumulative number of days recording or logging was not done / all days of the month	Daily Log Book entry/Incident Registers/letter references
#3.01	Percentage of Manpower Deployed w.r.t. Plan for the month as per Form-14.	RESOURCES	7		As per Part-B2 of Form-14	Daily Log Book entry/Incident Registers/letter references
#3.02	Percentage of T&P Deployed w.r.t. Plan for the month as per Form-14.	RESOURCES	7		As per Part-B1 of Form-14	Daily Log Book entry/Incident Registers/letter references
#3.03	Cumulative number of major instances in the month hampering / affecting progress of work due to breakdown or non-availability of major T&P and MME for the work, under the scope of Contractor	RESOURCES	3		Cumulative number of instances	Daily Log Book entry/Incident Registers/letter references
#3.04	Cumulative number of major instances in the month hampering / affecting progress of work due to non-availability of Consumables/ use of improper consumables under the scope of contractor	RESOURCES	3		Cumulative number of instances	Daily Log Book entry/Incident Registers/letter references
#4.01	Number of non-compliances during the month for Statutory requirements like validity of Labour Licence, Insurance Policy, Labour Insurance, PF, BOCW Compliance etc. and any other applicable laws/ Regulation, Electrical Licence, T&P fitness certificate, Contractors' All Risk Policy etc. as applicable	SITE INFRASTRUCTURE & SERVICE	1		Total number of non-compliances	Daily Log Book entry/Incident Registers/letter references
#4.02	Cumulative number of days in a month poor illumination is reported at storage area, erection area, pre-assembly area and other designated areas by BHEL site.	SITE INFRASTRUCTURE & SERVICE	0.5		Total number of non-compliances/random checks	Daily Log Book entry/Incident Registers/letter references
#4.03	Cumulative number of days of non-availability of well-maintained toilets facilities for workers (separate for men and women) and non-availability of potable drinking water stations for workers in specified areas.	SITE INFRASTRUCTURE & SERVICE	1		Total number of non-compliances/random checks	Daily Log Book entry/Incident Registers/letter references

Project		**Vendor**			**Package/Unit**	
Sl. No.	**Parameter for Measurement**	**Classification**	**Max Score**	**Score Obtained**	**Measurement Key/Scheduled date**	**Supporting Documents**
#4.04	Total number of instances in the month, Housekeeping NOT attended to in spite of instructions by BHEL -i.e. removal / disposal of surplus earth / debris / scrap / unused / surplus cable drums / other electrical items / surplus steel items / packing materials, thrown out scrap like weld butts, cotton waste etc. from the working area to identified locations	SITE INFRASTRUCTURE & SERVICE	2		Total number of non-compliances/random checks	Daily Log Book entry/Incident Registers/letter references
#4.05	Total number of instances in a month, Site Office with reasonably good facilities including enough nos. of computers and printers etc. for use by office and supporting staff was not made available/maintained.	SITE INFRASTRUCTURE & SERVICE	0.5		No discrepancy during regular or surprise visits	Photograph and report of the Engineer
#5.01	Number of days delayed in making labour payments for the last month	SITE FINANCE	2		Number of days delayed / Scheduled date is 7th day of next month	Daily Log Book entry/Incident Registers/letter references
#5.02	Number of complaints from labour/ sub supplier/ sub-contractor for non-receipt of payments from contractor	SITE FINANCE	1.5		Total number of complaints or reporting	Daily Log Book entry/Incident Registers/letter references
#5.03	Number of times the site operations were hampered for want of funds at the disposal of site-in-charge.	SITE FINANCE	1.5		Total number of non-compliances	Daily Log Book entry/Incident Registers/letter references
#6.01	Cumulative number of days in a month the nominated Safety Officer was not available	HSE & SA	1		Safety Officer should be available for all the days	Daily Log Book entry/Incident Registers/letter references
#6.02	Shortfall in number of weekly safety meetings in the month conducted or attended by the Safety Officer	HSE & SA	0.5		Safety meetings to be held every week	Copy of Minutes of meeting
#6.03	Level of compliance w.r.t decisions taken in previous Safety meetings	HSE & SA	0.5		Number of consolidated issues discussed in Safety meetings	Copy of Minutes of meeting, Non-compliance intimation documents from BHEL site
#6.04	Delay in submission of monthly report on safety (including electrical safety for equipment & personnel etc.) in the prescribed form	HSE & SA	1		Number of days delayed/Scheduled date is third working day of next month	Daily Log Book entry/Incident Registers/letter references
#6.05	Number of days taken for lodging FIRs from date of occurrence/notice of incident of theft / accident etc.	HSE & SA	0.5		Number of days delayed/Scheduled date is within 24 Hrs of occurrence/notice of incidence	Copy of FIR lodged by Contractor

Project		**Vendor**			**Package/Unit**	
Sl. No.	**Parameter for Measurement**	**Classification**	**Max Score**	**Score Obtained**	**Measurement Key/Scheduled date**	**Supporting Documents**
#6.06	Number of times written(email, letters etc.) warning issued for non-availability/ use of improper Fall protection and rescue arrangement as lifeline, fall arrestors, safety net, hand-railings, covered floors, man-basket, rescue basket & kit etc. by the contractor	HSE & SA	2		Total number of non-compliances	Daily Log Book entry/Incident Registers/letter references
#6.07	Number of times punitive fines imposed for unsafe practices as per contract like non-availability/use of PPEs as safety shoes, helmets, goggles, gloves, lifeline, safety belts etc.	HSE & SA	1		Total number of non-compliances	Non-compliance intimation documents from BHEL site
#6.08	Percentage compliance to Emergency preparedness and response plan: Portable Fire-extinguishers, Buckets, Fire-wardens, display of emergency numbers, mock-drills, Hazard Identification and Risk Assessment(HIRA) etc.	HSE & SA	1		Compliance should be 100% as per HSE Plan or as finalized in Safety Meetings	Non-compliance intimation documents from BHEL site
#6.09	Number of times the agency has defaulted on display of safety posters / safety slogans / safety barriers/emergency numbers etc. in identified areas	HSE & SA	0.5		Total number of instances	Non-compliance intimation documents from BHEL site
#6.10	Non compliances observed during HSE and Safety Audit	HSE & SA	0.5		Total number of non-compliances	Non-compliance intimation documents from BHEL site, Audit Reports
#6.11	Cumulative number of days in the month, non-availability of First Aid Kit, First Aider & Emergency Vehicles/Ambulance.	HSE & SA	0.5		Cumulative number of days	Non-compliance intimation documents from BHEL site
#6.12	Number of days taken for submission of Root Cause analysis (RCA) for the accident from the cut-off date intimated by BHEL for submission of RCA	HSE & SA	0.5		Number of days delayed/Scheduled date is cut-off date intimated by BHEL	Daily Log Book entry/Incident Registers/letter references
#6.13	Non conductance of training (induction, job specific, height work etc.), tool box meeting and health check-up as per Contract requirements	HSE & SA	0.5		Number of incidences of non-conductance during the month	Daily Log Book entry/Incident Registers/letter references
		Total	**100**			

Project		**Vendor**			**Package/Unit**	
Sl. No.	**Parameter for Measurement**	**Classification**	**Max Score**	**Score Obtained**	**Measurement Key/Scheduled date**	**Supporting Documents**
Less Deduction in Score Due to Major Accidents (Fatal, Permanent Disability or bodily injury by which person injured is prevented to resume to work within 48 hours or more after accident,, Major Damage to Equipment etc.) attributable to the contractor @ 3 points/ accident						
Less Deduction in Score Due to Minor Accidents attributable to the contractor @ 1 point/ accident						
Less Deduction in Score Due to not Maintaining of Labour Colony (if applicable) as per BHEL HSE policy @2 points in a month on verification any day						
				Final Score		

Performance Score Summary for the Month	**Total Score**	**Score Obtained**
QUALITY	10	
PERFORMANCE	50	
RESOURCES	20	
SITE INFRASTRUCTURE & SERVICE	5	
SITE FINANCE	5	
HSE & SA	10	
OTHERS (deductions if any)	0	
TOTAL	**100**	

Note:

1) It is only indicative and shall be as per the online format issued by BHEL time to time.
2) No request will be entertained after specified date of current month w.r.t. changes requested in the scores of immediate previous month.

Name and Signature of BHEL Package In-charge

Name and Signature of Contractor

Form No: F-19 (Rev 00)

MILESTONE COMPLETION CERTIFICATE
(issued by BHEL on the specific request of Contractor)

Ref :
Date:

To,

(Name & address of Contractor)

Dear Sir,

References
1. Contract No:
2. Job Description:

This is to hereby confirm that the following Milestone Activity has been achieved in respect of the Contract /Job under reference

Sl No	Milestone Activity	Remarks

This certificate is issued as per your request vide letter no …… without any prejudice to the rights of BHEL in line with the terms and conditions of the above referred Contract

Yours faithfully,

For and on behalf of Bharat Heavy Electricals Limited

Construction Manager/Head (Subcontracts)

Form No: F-20 (Rev 01)

CONTRACT COMPLETION CERTIFICATE
(Issued by BHEL/HQ on the specific request of Contractor)

Ref :
Date:

To Whom so ever it may concern

1	DESCRIPTION OF WORK	
2	NAME AND ADDRESS OF THE CONTRACTOR	
3	CONTRACT NO	
4	CONTRACT VALUE	
5	LETTER OF INTENT NO & DATE	
6	CONTRACT PERIOD//CONTRACT DURATION	
7	DATE OF START/COMPLETION	
8	FINAL EXECUTED VALUE	
9	PERFORMANCE	GOOD SATISFACTORY UNSATISFACTORY

This certificate is issued as per your request vide letter no …….
without any prejudice to the rights of BHEL to use this certificate for evaluation of your offers for future tenders

Yours faithfully,

For and on behalf of Bharat Heavy Electricals Limited

Head (Subcontracts)

Form No: F-21 (Rev 00)

INDEMNITY BOND

(To be executed on a Non Judicial Stamp Paper of the requisite value as per Stamp Duty prevalent in the respective State)

This Indemnity Bond executed by <name of company> having their Registered Office at <xxxxxxxxxx> in favour of M/s Bharat Heavy Electricals Limited, a Company incorporated under the Companies Act, 1956, hav ing its R egistered Office at BH EL House, Siri Fort, Asiad, Ne w Delhi - 110049 through its U nit at Power Secto r-_____ Region, ____ _____, _____ State. (Hereinafter referred to as the Company)

And whereas the Company has entered into a Contract with M/s xxxxxxxxx, th e executants of this D eed (hereinafter refe rred to as the Contractor) as it s contractor in respect of the work of "xxxxxxxxxxxxxxxxxxxxxxxxx".

AND WHEREAS under the provisions of G CC further stipulates that the Contractor shall indemnify the Company against all claims of w hatever nature aris ing during the course of execution of Contract including defects liability period of <xx Months > i.e till <xx xx xxxx>

Now this deed witnes s that in case the Company is made liable by any Authority including Court to pay any claim or compensation etc. in respect of all labour ers or other matters at any stage under or relating to the Contract with the C ontractor , the Contractor hereby covenants and agrees with the C ompany that they shall indemnify and reimburse the Company to the extent of such payments and for any fee, including litigation charges, lawyers' fees, etc, penalty or damages claimed against t he Company by reason of th e Contractor falling to comply with Central/States Laws, Rules etc, or his failure to comply with Contract (including all expenses and charges incurred by the Company).

The Contractor further indemnifies the Company for the amount which the Company may be liable to pay by way of penalty for not mak ing deductions from the Bills of the Contractor towards such amount and depositing the same in the Government Treasury.

The Contractor further agree that the Company shall be entitled to with hold and adjust the Security Deposit and/or with ho ld and adjust payment of Bills of Contractor pertaining to this Contract against any payme nt which the Company has made or is required to mak e for which the Contractor is liab le under the Contract and that such amount can be withheld, adjusted by the Company till satisfactory and final settlement of all pending matters and the Contractor hereby gives his consent for the same.

The Contractor further agrees that the terms of indemnity shall s urvive the ter mination or completion of this contract.

The contractor further agrees that the liability of the contractor shall be extended on actual basis notwithstanding the limitations of liability clause, in respect of :

1. breach of terms of contract by the contractor
2. breach of laws by the contractor
3. breach of Intellectual property rights by the contractor
4. breach of confidentiality by the contractor

Nothing contained in this deed, shall be construed as absolving or limiting the liability of the Contractor under said Contract between the Company and the Contractor . That this Indemnity Bond is irrevocable and the condition of the bond is that the Contractor shall duly and punctually c omply with the terms and the conditions of this deed and contractu al provisions to the satisfaction of the Company.

In witness where of M/s xxxxxxxxxxxxx these presents on the day, month and year first, above written at xxxxxxxx by the hand of its signatory Mr. xxxxxxxxxx.

Signed for and on behalf of
M/s xxxxxxxxxxxxxx

Witness:
1
2

Form No: F-22 (Rev 00)

CONSORTIUM AGREEMENT

(To be executed on Rs. 50/- Non – Judicial Stamp Paper)

THIS AGREEMENT is made and executed on this _____ day of _____, by and between (1) M/s _____ , (The First Party, i.e, the Bidder) a company incorporated under the Company's Act 1956, having its registered office at _____ _____(herein after called the "Bidder", which expression shall incl ude its' successors, administrators, executors and permitted assigns) and (2) M/s _____ _____, (The Second Party, i.e, the associates), a company incorporated under th e Company's Act 1956, having its registered office at _____ (herein after called the " Associates", whic h expression shall include its' successors, administrators, executors and permitted assigns).

WHEAEAS the Owner, Bharat Heavy Electr icals Ltd, a Government of India Undertaking, proposes to issue / issued an NIT (herein after referred to as the said NIT) inviting bids from t he individual Bidders for undertaking the work of _____, at _____ (herein after referred to as the said works).

WHEREAS the said NIT enables submis sion of a bid by a Consortium subject to fulfillment of the stipulations specified in the said NIT.

AND WHEREAS M/s _____ _____ (The F irst Party, i.e, the Bidder) will submit its proposal in response to the aforesaid invitation to bid by the Owner for _____ as detailed in the Bid doc. no. < TENDER REF-------->

AND WHEREAS M/s _____ _____ (The First Party, i.e the Bidder) itself is meeting all the qualifying requirements except the qualifying requirements of _____ _____ (as detailed in the NIT) and in order to fully meet the qualifying requirements of NIT, this tie-up agreement is being entered into with M/s _____ (The Second Party, the Associates), who fully meet the balance part of the said works (_____).

WHEREAS the First Party and the Second Party are contractors engaged in the business of carrying out various items of works. WHEREAS the two parties have agreed to constitute themselves into a consortium for the purpose of carrying out the said works, and that the consortium will be continued till the completion of the works in all respects.

WHEREAS the parties have agreed to certain terms and conditions in this regard:

NOW THEREFORE THIS AGREEMENT WITNESSETH AS FOLLOWS :

1. First and Second parties hereby constitute themselves into a Consortium for the purpose of bidding and undertaking the said works pursuant to the said NIT as hereinafter stated.

2. The First Party will be the leader (Lead Partner) and will be responsible for the entire works.

CONSORTIUM AGREEMENT

3. The First Party shall undertake the following part(s) of work detailed in the NIT namely

_____
_____
__

4. The Second Party shall undertak e the following part(s) o f work detailed in the said NIT namely

_____
_____
__

5. The parties hereby d eclare and confirm that each of them will fulfill the required minimum qualifying requi rements as prescribed in the said NIT for the wor ks agreed to be undertaken by them as stated here-in-above.

6. It is also agreed between the parties hereto that all of them shall be individually and severally responsibl e for the completion of the said works as per the schedule. Further, if the Employ er/Owner sustains any loss or damage on a ccount of any breac h of the C ontracts, we the, Consortium partners individually and severally undertake to promptly indemnify and pay such losse s / damages caused to the Employer/Owner on it s written dem and with out any demur , reservation, contest or protest in any manner whatsoever.

7. The parties hereby agree and under take that they shall provide adequate finances, suitable Tools, Plan ts, Tractors, Trailers, other transportation equipment, other Tools & Plant s, Measuring & Monitoring Equipments (MME s), Men and Machinery etc. for the proper and effective execution of the works to be undertaken by them as specified here-in-above.

8. It is agreed interse between t he parties hereto that all the consequences liabilities etc., arising out of any default in the due execution of the said works shall be borne by the party in default, that is by party in whose area of works default has occurred, provided however, so far as M/s Bharat Hea vy Electricals Limited is concer ned, all the parties shall be liable jointly and severally.

IN WITNESS HEREOF the parties above named have signed this agreement on the day month and year first above written at _____(Place) .

WITNESS For

1. NAME (FIRST PARTY)

2. OFFICIAL ADDRESS

WITNESS For

1. NAME (SECOND PARTY)

2. OFFICIAL ADDRESS

[The successful bidder shall have to execute the " JOINT DEED OF UNDERTAKING " in the format to be made available by BHEL at the time of awarding].

Form No: F-23 (Rev 00)

REFUND OF SECURITY DEPOSIT

To,
The Construction Manager
BHEL Site Office

Dear Sir,

Sub : **Refund of Security Deposit**
Ref : Contract No: ……,
Work:……..
I/We have submitted Final Bill in respect of the above Contract/Work vide our letter no:…… dated …….. . In line wit h Tender c onditions (GCC clause no 1.11), kindly arrange to release/refund the Security Deposit along with Final Bill payments.

The details of Security Deposit are as below:

1. Cash Portion :
2. BG Portion :

Thanking You

Date: _____ Authorised representative of Contractor

==========

To be filled up by BHEL

1. Security Deposit to be refunded:
    a. Cash Portion:
    b. BG Portion :
2. Less
    a. Amount spent by BHEL on behalf of Contractor:
    b. Payments made by BHEL on behalf of Contractor:
    c. Other recoveries for Services etc
    d. Any other recoveries
    e. Total of 'a' to 'd':
3. Net Amount to be released (1-2) :
4. Certified that
    a. The payment recommended for release is in order and there are no demands other than those included in the claim outstanding from the Contractor
    b. Contract Guarantee period of ……. Months commenced wef :_____
    c. All objections raised so far have been settled
    d. A note for refund of Security Deposit has been made in the Measurement Book

Signature of BHEL Engineer

Construction Manager

Date:----------

Form No: F-24 (Rev 00)

REFUND OF GUARANTEE MONEY

BHARAT HEAVY ELECTRICALS LIMITED
POWER SECTOR, _____ REGION

Ref No: Date:

1. Name and Address of Contractor :
2. Contract Agreement/LOI No :
3. Date of Contract Agreement/LOI :
4. Name of the Work undertaken :
5. Date of commencement of the Work :
6. Date of Completion of the Work :
7. Period of Maintenance (Guarantee Period) :
8. Date on which the Final Bill was paid :
9. Last date of making good the defect during Maintenance Period :
10. Expenditure incurred by BHEL during Maintenance Period, if any, recoverable :
11. Date on which Guarantee Money refund: falls due as per Contract
12. Amount of Guarantee Money to be refunded:
13. Less Amounts recoverable (with details)
    a. Amount spent by BHEL on maintenance :
    b. Payments made by BHEL on behalf of Contractor:
    c. Court dues/penalties/compensation :
    d. Other recoveries for Services, etc :
    e. Total of 'a' to 'd' :
14. Net Amount recommended for release (12-13) :

Signature of BHEL Engineer

Date: _____

CERTIFICATE TO BE FURNISHED BY THE CONTRACTOR

I/We have no claim or demand outstanding against BHEL_____, for the work done or for labour or material supplied or any other account arising out of or connected with the Contract Agreement/LOI (No_____ dated _____) and the payment of this bill shall be in full and final settlement of all my/our claims and demands including the 'Deposits' of the Contract Agreement/LOI referred to.

Signature of Contractor

Date:

CERTIFICATE TO BE FURNISHED BY SENIOR ENGINEER/CONSTRUCTION MANAGER

1. Certified that
   a. The payment recommended for release is in order and there are no demands other than those included in the claim outstanding from the Contractor
   b. Maintenance period (Contract Guarantee period) is over and the Contractor has carried out the works required to be carried out by him during the period of maintenanc e (Guarantee) to our satisfaction, and all expens es incurred by the Company on carrying out such works have been included for adjustment
   c. All objections raised so far have been settled
   d. A note for refund of Guarantee Amount has been made in the Meas urement Book and Contract Agreement/Work Order

Signature of BHEL Engineer

Construction Manager

Date:----------

FOR USE IN ACCOUNTS DEPARTMENT

Passed for Rs_____ (Rupees _____ only)

Accountant Accounts Officer

ACKNOWLEDGE BY THE CONTRACTOR

Received Rs _____ in full and final settlement of my/our claim

Signature of Contractor

Date:

Form No: F-25 (Rev 00)

POWER OF ATTORNEY for SUBMISSION OF TENDER/SIGNING CONTRACT AGREEMENT

(To be typed on non judicial Stamp Papers of appropriate value as applicable and Notarised)

KNOW ALL MEN BY THESE PRESENTS, that I/We do hereby make, nominate, constitute and appoint Mr …… …….. , whose signature given below herewith to be true and lawful Attorney of M/s…… hereinafter called 'Company', for submitting Tender/entering into Contract and inter alia, sign, execute all papers and to do necessary lawful acts on behalf of Company with M/s Bharat Heavy Electricals Ltd, Power Sector _____ Region, _____, in connection with …… …… …… vide Tender Specification No : _____, dated _____.

And the Company do hereby agree to ratify and confirm all acts, deeds, things or proceedings as may be lawfully done by the said attorney and by or on behalf of the company and in the name of the company, by virtue of the powers conferred herein and the same shall be binding on the company and shall have full force and effect.

IN WITNESS WHEREOF the common seal of the company has been hereunto affixed in the manner hereinafter appearing on the document.

Dated at _____, this _____ day of _____

Director/CMD/Partner/Proprietor

Signature of Mr……(Attorney)

Attested by: Director/CMD/Partner/Proprietor

Witness

Notary Public

Form No: F-26 (Rev 00)

ANALYSIS OF UNIT RATES QUOTED

(To be typed and submitted in the Letter Head of the Company/Firm of Bidder)

Offer Reference No:…… Date:……

To,
(Write Name & Address of Officer of BHEL inviting the Tender)

Dear Sir,

Sub : Analysis of Unit Rates Quoted
Ref : Tender Specification No: ……

Analysis of Unit Rates quoted by us in respect of above Tender is as detailed

SN	DESCRIPTION	% OF QUOTED RATE	REMARKS
01	SITE FACILITIES VIZ., ELECTRICITY, WATER OTHER INFRASTRUCTURE.		
02	SALARY AND WAGES + RETRENCHMENT BENEFITS		
03	CONSUMABLES		
04	T&P DEPRECIATION & MAINTENANCE		
05	ESTABLISHMENT & ADMINISTRATIVE EXPENSES		
06	OVERHEADS		
07	PROFIT		
	TOTAL	100%	

Yours faithfully,

(Signature, Date & Seal of Authorized Representative of the Bidder)

Form WAM 6

BHARAT HEAVY ELECTRICALS LIMITED
DIVISION.....
Running Account Bill
(Para 4.31.1 of Works Accounts Manual)

Name of the Contractor: Departmental Bill no: Date:
Name of the Work: Division: Sub-Division:
Sanctioned Estimate: Date of written order to commence the work :
Code No: Date of commencement of the Work:
Contract Agreement No : Dated: Due date of completion as per Agreement:

1. ACCOUNT OF WORK EXECUTED

On account payment for work not previously previously measured**			Item No of	Description of Work	Quantity as per agree-ment	Quantity executed up to date	Rate	Unit	Payment on the basis of actual measure-ment up to date	Quantity since last running account bill	Payment on the basis of actual measurement since last running account bill		Remarks
Total As per Running Account bill	since last running account bill	Total up to date											
Rs.	Rs.	Rs.					Rs.	P.	Rs.	P.	Rs.	P.	
1	2	3	4	5	6	7	8	9	10	11	12		13

* *1. Whenever payment is made on 'on account' basis without actual measurements the amount in whole rupees should be entered in columns 1 to 3 only and not in columns 7 to 12.
2. whenever there is an entry in column 12 on the basis of actual measurement, the whole of the amount previously paid without detailed measurement should be adjusted by a minus entry in column 2 equivalent to the amount shown in column 1, so that the total up to date in column 4 may become nil.

Form WAM 6 (contd…)

1	2	3	4	5	6	7	8	9	10	11	12	13

Total value of work done up to date (A) …

Running Account Bill — Deduct value of work shown on the last (B) …

Net value of work done since last (C) …

Rupees (in words)

……only.

Form WAM 6 (contd…)

II.MEMORANDUM OF PAYMENTS

		Rs. P.	I Rs. P.	II Rs. P.
1.Total value of work actually measured as per Account No. I. Column 10	(A)	……		……
2.Total up to date 'on account' payment for work covered by approximate Or plan measurements as per Account No. I, Column 3	(B)	……		……
3.Total up to date secured advances on security of materials as per column 8 Of the enclosed Account (Form WAM 10)	(C)	……		……
4.Total up to date payments [(A) + (B) + (C)]	(D)	……		……
5.Total amount of payments already made as per Entry (D) of last Running Account Bill No…….. Dated……..forwarde to the Accounts Office on …….	(E)			
6.Balance [(D)-(E)]		……..……		
7.Payments now to be made:				
a) by cash/cheque			……	
b) by deduction for value of materials supplied				
c) by BHEL vide Annexure A attached			……	
d) by deduction for hire of tools and plant vide				

Annexure B attached ……

e) by deduction for other charges vide Annexure C

Attached ……

f)by deduction on account of security deposit ……

h) by deduction on account of Income Tax …… ……

Note: Amounts relating to items 4 to 6 above should be entere in column II and those relating to item 7 in column I. The amount shownagainst item 6 and the total of item 7 should agree with each other.

III.CERTIFICATE OF THE ENGINEER IN CHARGE **Form WAM 6 (contd…)**

1. The measurements on which the entries in column 7 to 12 of Part I of this Bill (Account of work executed) are based were made by……and are recorded at pages……..of
(Name and Designation)

Measurement Book No ……..

2. Certified that the methods of measurement are correct and the work has been carried out in accordance with the terms and conditions, schedules, specifications and drawings etc, forming part of the contract agreement, subject to deviations included in the deviation statement (Annexure D).
3. Certified that in addition to and quite apart from the quantities of work actually executed as shown in column 10 of Part I, some work has actually been done in connection with several items and the value of the such work is, in no case, less than 'on account' payments as per column 3 of Part I, made or proposed to be made, for the convenience of the contractor in anticipation of, and subject to the results of, detailed measurement which will be made as soon as possible.

Signature of Contractor Signature of Engineer in charge

Date: Designation:

Date:

IV. CERTIFICATE OF THE SENIOR ENGINEER

1. Certified that measurements have been check measured to the prescribed extent by ……... ……at site and also by the undersigned and the relevant entries have been intialled in the Measurement book. (vide pages……)
(Name and Designation)
2. Certified that all the measurements recorded in the measurement book have been correctly billed for
3. Certified that all recoberable amounts in respect of materials tools and plant etc, and other charges have been correctly made vide Annexures A to C attached.

Certified for payment * of Rs…….(Rupees…….only)
To be paid in cash/by cheque in the presence of …….

ALLOCATION

The expenditure is chargeable as under and to be included in the accounts for……20……

Ledger Head	Debit (Gross amount) Rs. P.	Credit (Deductions) Rs. P.
_____	_____	_____
Total	_____	_____
	_____	_____

* Here specify the net amount payable.

Signature of Senior Engineer
Date:

Form WAM 6 (contd…)

V.ENTRIES TO BE MADE IN THE ACCOUNTS OFFICE

Accounts Bill No ……Dated……..
Entered in Journal Book vide entry No…….Dated…….
Passed for……Rs……
Less Deductions……..Rs……
Net Amount Payable……Rs……...
(Rupees…….only)
Payable to Shri/M/s……by cheque/cash
Entered in Contractor's Ledger No……Page……..

ALLOCATION

Estimate No: Code no:
Name of the Work:

Ledger Head	Debit (Gross amount) Rs. P.	Credit (Deductions) Rs. P.
_ _ _ _ _ _ _ _	_ _ _ _ _ _ _ _	_ _ _ _ _ _ _ _ _ _
	_ _ _ _ _ _ _ _	

Total _ _ _ _ _ _ _ _ _ _ _ _ _ _ _ _

Assistant Accountant Account Officer
Date: Date: Date:

VI. Received Rs.....(Rupees.....only) as per Memorandum of Payments on account of this work.

Signature of witness Revenue
Address :

Stamp
Signature of Contractor
Date: Date:

VII. ENTRIES TO BE MADE BY TREASURY SECTION

Cash Book entry No. and date: Amount paid Rs.....

Amount unpaid Rs.....

Total Rs.....

Signature of Cashier
Date:

Form WAM 6 (contd...)

ANNEXURE A

Statement showing details of materials issued to the contractor Shri/M/s……

In respect of Contract Agreement No ……..Dated……

Sl. No.	Stores issue Voucher No. and date	Issue voucher No. and date allotted by stores to the SIV	Description of material issued to the contractor	Quantity issued	Quantity actually incorp-rated in the work	Whether recover-able from the contrac-tor or supplied free	If recoverable from the contractor				REMARKS
							Rate at which recover-able	Amount recover-able	Amount recover-ed up to previous bill	Balance now recover-ed	
							Rs. P.	Rs. P.	Rs. P.	Rs. P.	
1	2	3	4	5	6	7	8	9	10	11	12
			Total								

Signature of contractor — Signature of Engineer in Charge — Signature of Senior Engineer

Date: — Date: — Date:

Form WAM 6 (contd…)

ANNEXURE B

Statement showing tools and plant issued to the contractor Shri/M/s……

In respect of Contract Agreement No ……..Dated……

Sl. No	Description of tools and plant issued	Period for which Issued	Rate at which recovery Is to be Made Rs. P.	Amount recover-able Rs. P.	Amount recovered upto previous bill Rs. P.	Balance now recovered Rs. P.	Remarks
1	2	3	4	5	6	7	8
					Total		

Signature of contractor — Signature of Engineer in Charge — Signature of Senior Engineer

Date: — Date: — Date:

Form WAM 6 (contd…)

ANNEXURE C

Statement showing details of other recoveries to be made from the contractor Shri/M/s……..……

In respect of Contract Agreement No ……..Dated……

Sl. No	Particulars	Unit	Quantity	Rate	Amount recover-able	Amount recovered upto pre-vious bill	Amount now recovered	Remarks
				Rs. P.	Rs. P.	Rs. P.	Rs. P.	
1	2	3	4	5	6	7	8	9
1.				Water Charges				
2.				Electricity charges				
3.				Seignorage charges				
4.				Medical charges				
5.	Empty containers not returned			Cost of empty gunny bags and				
6.								
7.								
8.								
9.								

10.

Total _

Signature of contractor | Signature of Engineer in Charge | Signature of Senior Engineer

Date: | Date: | Date:

Form WAM 6 (contd…)

ANNEXURE D

Name of the Contractor: Contract Agreement No:
Name of the Work: Date:

Sl. No.	Description of item	Unit	Quantity as per Agreement	Quantity as executed	Quantity further anticipated	Total quantity anticipated on completion	Rate as per agreement Rs. P.
1	2	3	4	5	6	7	8

Rate as the executed with any Rs. P.	Amount as per agreement Rs. P.	Amount as executed Rs. P.	Amount further anticipated Rs. P.	Total amount anticipated on completion Rs. P.	Difference _ _ _ _ _ _ _ _ _ _ _ Excess Rs. P.	Difference _ _ _ _ _ _ _ _ _ _ _ savings Rs. P.	Reason for deviation authority, if
9	10	11	12	13	14	15	16

Signature of Engineer in Charge
Date:

Signature of Senior Engineer
Date:

BHARAT HEAVY ELECTRICALS LIMITED
DIVISION……
……And Final bill
(Para 4.3.2 Of Works Accounts Manual)

Name of Contractor		Departmental Bill no		Date	
Name of the Work		Division		Division	
Sanctioned Estimate		Date of written order to commence the work			
Contract Agreement/work Order No		Date of commencement of work			
		Due date of completion as per agreement			
		Date of actual completion of the work			

I. ACCOUNT OF WORK E□ECUTED

On Account payment for the work not previously measured **			Item No of the agreement/ work order	Description of work	Quantity as per agreement	Quantity executed up to date	Rate Rs. P	Unit	Payment on the basis of actual measurement up to date Rs P	Quantity since last running account bill	Payment on the basis of actual measurement since last running account bill Rs P	Remarks
Total as per last running account bill Rs.	Since last running account bill Rs	Total up to date Rs										
1	2	3	4	5	6	7	8	9	10	11	12	13

BHARAT HEAVY ELECTRICALS LIMITED,
POWER SECTOR - EASTERN REGION, KOLKATA
TENDER NO. PSER:SCT:NKP-M2050:20

1	2	3	4	5	6	7	8	9	10	11	12	13

II MEMORANDUM OF PAYMENT												
										Rs.	P	
1	Total Value of work actually measured as per Account no I coloumn 10 (A)											
2	Deduct amount of paym,ents already made as per last running account bill No ……. Dated……. Forwarded to the Accounts Office on ……. (B)											
3	Payments now to be made { (A) - (B)} (C)											
4	Deduct ammounts recoverable from the contractor on account of :								Rs	P		
	a	Material suplied by BHEL vide annexure A attached										
	b	Hire of Tools & Plants vide Annexure B attached										
	c	Other charges vide Annexure C attached										
	d	Income Tax										
		Total deduction										
5	Balance											
6	Refund of 50% of security deposite on completion of work											
7	Net amount to be paid to the Contractor											
III. CERTIFICATE OF THE ENGINEER IN CHARGE												
1	The measurement on which the entries in coulmns 7 to 12 of Part I of this bill (Account of work executed) are based were made by …….. (Name and designation)											
2	A statement showing the quantities of stores issued to the contractor (whether free or on recovery basis) and their disposal is attached.											
	Date:								Signature of Engineer in charge			
									Designation			

I CERTIFICATE OF THE SENIOR ENGINEER

1 Certified that I have personally inspected the work and that the work has been physically completed on the due date in accordance with the terms and

2 Cretified that the measurements have been check measured to the prescribed extent by …….
…… (Name & designation). And by the the undersigned at site and relevent entries have been initiated in the measurement book (vide pages…… ….)

3 Certified that the methods of measurement are correct

4 Certified that the measurements have been technically checked with reference to contract drawings, deviations etc

5 Certified that all the measurements recorded in the measurement book have been correctly billed for at the contract rates or approved rates.

6 Certified that all the recoverable amounts in respect of stores, tools and pa\lant, e\water, electricity charges etc, have been correctly made vide Annexures A

7 Certified that the issues of all stores as per statement atytached (whether charged to the contractor or direct to the work) have been technically checked and

Certified for payment of * Rs ……. (Rupees…… (Only). To be paid in cash/by cheque in the presence of ……..

ALLOCATION

The expenditure as under and to be included in the accounts for ……..19

Ledger Head ……	Debit (Gross Amount) Rs. P ……	Credit (Deduction) Rs. P ……
Total	……	……

* Here specify the net amount payable

Signature of Senior Engineer

Date

□. ENTRIES TO BE MADE IN THE ACCOUNTS OFFICE

Account Bill no…… Dated ……
Entered in Journal book vide entry No……Dated……
Passed for……Rs……..
Less Deductions……..Rs……
(Rupees……Only)
Payable to Shri/M/s…….... by cheque/cash
Entered in contractors' Ledger no..... Page

Assistant Accountant Accounts officer
Date: Date: Date:

ALLOCATION

Estimate No: Code No
Name of the Work ……

Ledger Head	Debit (Gross Amount) Rs P	Credit (Deduction) Rs
……	.....	.....
Total	.....	.....

VI. Received Rs……..(Rupees……..Only) in full and final settlement of all moneys due under this contract and I / we have no further claims of this contract.

Signature of Witness
Address

Revenue Stamp
Signature of Contractor
Date:

□II . ENTRIES TO BE MADE BY TREASURY SECTION

C□□□ □□□□ □□r□ □□ □□d d□□□ :

A□ □□□□P□□d R□□ □ □ □ □ □ □
A□ □□□□□□□□□d R□□ □ □ □ □ □ □ □ ..
T□□□□ R□□ □ □ □ □ □ □ ..

S□□□□□r□ □□C□□□□r
D□□□:

ANNEXURE A

Part I

Statement showing details of material issued to the contractor Shri/M/s…….. In respect of Contract Agreement/Work Order No…….. Dated ……

Sl No	Stores Issue voucher No and date	Issue voucher No and date alloted by stores to the SIV	description of material issued to the contractor	Quantity issued	Quantity actually incorporated in the work	Whether recoverable from the contractor or supplied free	If recoverable from contractor				Remarks
							Rate at which recoverable Rs P	Amount Recoverable Rs P	Amount recoverable upto previous bill Rs P	Balance Now recovered Rs P	
1	2	3	4	5	6	7	8	9	10	11	12
						Total	……				
	Signature of Contractor					Signature of Engineer in charge				Signature of Senior Engineer	
	Date					Date				Date	

ANNEXURE A

Part II

Statement showing details of material issued to the contractor Shri/M/s…….. in respect of Contract Agreement/Work Order No…….. Dated ……..……and not covered by the agreement

Sl No	Stores Issue voucher No and date	Issue voucher No and date alloted by stores to the SIV	description of material issued to the contractor	Quantity issued	Quantity actually incorporated in the work	Issue Rate Rs P	Amount Recoverable Rs P	Amount recoverable upto previous bill Rs P	Balance Now recovered Rs P	Remarks
1	2	3	4	5	6	7	8	9	10	11
						Total	……			
						Add Departmental Charges Add Sales Tax (wherever applicable)	……..			
						Total	……..			
	Signature of Contractor					Signature of Engineer in charge				Signature of Senior Engineer
	Date					Date				Date

ANNEXURE B

Statement showing TOOLS & PLANTS issued to the contractor Shri/M/s…….. in respect of Contract Agreement/Work Order No…….. Dated ……and not covered by the agreement

Sl No	Description of tools & plants issued	Period for which issued	Rate at which Recivery is to be made	Amount recoverable Rs P	Amount recoverable upto previous bill Rs P	Balance Now recovered Rs P	Remarks
1	2	3	4	5	6	7	8
				Total	……		
	Signature of Contractor			Signature of Engineer in charge			Signature of Senior Engineer
	Date			Date			Date
ANNEXURE C							

howing detail of other recoveries to be made from the contractor Shri/M/s……
ent/Work Order No……Dated……

Sr.No	Particulars	Unit	Quantity	Rate Rs. P.	Amount recoverable Rs. P	Amount recovered upto previous bill Rs. P.	Amount now recovered Rs. P.	Remarks
1	2	3	4	5	6	7	8	9
1	Water Charges							
2	Electricity Charges							
3	Seignorage Charges							
4	Medical Charges							
5	Cost of empty gunny bags and empty containers not returned							
6								
7								
8								
9								
10								
		Total						

Signature of Contractor — Signature of Engineer Incharge — Signature of Sr. Engineer
Date — Date — Date

ANNEXURE F

Statement showing detail of materials issued to the contractor Shri/M/s……

t of Contract Agreement/Work Order No……Dated……

Name of work; **FREE OF COST**

Sr.No	Stores issue voucher No.	ription of ma	Unit	Quantity issued	Quantity requried as per data	Quantity consumed in the work	Balance(If any)	Nature of disposal for the balance	Rate chargeable for material not returned Rs.P.	Amount recoverable for material not returned Rs. P	Remarks
1	2	3	4	5	6	7	8	9	10	11	12
			Total								

Signature of Contractor — Signature of Engineer Incharge — Signature of Sr. Engineer

Date — Date — Date

Note:Data statement of therotical consumption should be attached in support of the quantity specified in coloumn 6

BHARAT HEAVY ELECTRICALS LIMITED
DIVISION……
……And Final bill
(Para 4.3.2 Of Works Accounts Manual)

Name of Contractor		Departmental Bill no		Date	
Name of the Work		Division		Division	
Sanctioned Estimate		Date of written order to commence the work			
Contract Agreement/work Order No		Date of commencement of work			
		Due date of completion as per agreement			
		Date of actual completion of the work			

I. ACCOUNT OF WORK EXECUTED

On Account payment for the work not previously measured **			Item No of the agreement/ work order	Description of work	Quantity as per agreement	Quantity executed up to date	Rate Rs. P	Unit	Payment on the basis of actual measurement up to date Rs P	Quantity since last running account bill	Payment on the basis of actual measurement since last running account bill Rs P	Remarks
Total as per last running account bill Rs.	Since last running account bill Rs	Total up to date Rs										
1	2	3	4	5	6	7	8	9	10	11	12	13

BHARAT HEAVY ELECTRICALS LIMITED,
POWER SECTOR - EASTERN REGION, KOLKATA
TENDER NO. PSER:SCT:NKP-M2050:20

1	2	3	4	5	6	7	8	9	10	11	12	13

Total Value of Work Done up to date	(A)	
Deduct Value of work shown on the last running account bill	(B)	
Net value of work done since last running account bill	(C)	

Rupees (In Words).....Only

II MEMORANDUM OF PAYMENT

		Rs.	P
1	Total Value of work actually measured as per Account no I coloumn 10 (A)		
	Deduct amount of paym,ents already made as per last running account bill No ……. Dated…….		
2	Forwarded to the Accounts Office on ……. (B)		
3	Payments now to be made { (A) - (B)} (C)		
4	Deduct ammounts recoverable from the contractor on account of :	Rs	P
	a Material suplied by BHEL vide annexure A attached		
	b Hire of Tools & Plants vide Annexure B attached		
	c Other charges vide Annexure C attached		
	d Income Tax		
	Total deduction		
5	Balance		
6	Refund of 50% of security deposite on completion of work		
7	Net amount to be paid to the Contractor		

III. CERTIFICATE OF THE ENGINEER IN CHARGE

The measurement on which the entries in coulmns 7 to 12 of Part I of this bill (Account of work executed) are based were made by ……..

1 (Name and designation)

2 A statement showing the quantities of stores issued to the contractor (whether free or on recovery basis) and their disposal is attached.

Date:

Signature of Engineer in charge
Designation

IV CERTIFICATE OF THE SENIOR ENGINEER

1 Certified that I have personally inspected the work and that the work has been physically completed on the due date in accordance with the terms and
Cretified that the measurements have been check measured to the prescribed extent by ……
…… (Name & designation). And by the the undersigned at site and relevent entries have been initiated in the measurement book (vide
2 pages…… ….)
3 Certified that the methods of measurement are correct
4 Certified that the measurements have been technically checked with reference to contract drawings, deviations etc
5 Certified that all the measurements recorded in the measurement book have been correctly billed for at the contract rates or approved rates.
6 Certified that all the recoverable amounts in respect of stores, tools and pa\lant, e\water, electricity charges etc, have been correctly made vide Annexures A
7 Certified that the issues of all stores as per statement atytached (whether charged to the contractor or direct to the work) have been technically checked and

Certified for payment of * Rs ……. (Rupees…… (Only). To be paid in cash/by cheque in the presence of ……..

ALLOCATION

The expenditure as under and to be included in the accounts for ……..19

Ledger Head	Debit (Gross Amount) Rs. P	Credit (Deduction) Rs. P
……	……	……
Total	……	……

* Here specify the net amount payable

Signature of Senior Engineer
Date

V. ENTRIES TO BE MADE IN THE ACCOUNTS OFFICE

Account Bill no…… Dated …….
Entered in Journal book vide entry No……Dated……
Passed for…….Rs……..
Less Deductions……..Rs……
(Rupees…….Only)
Payable to Shri/M/s……... by cheque/cash
Entered in contractors' Ledger no..... Page

Assistant Accountant Accounts officer
Date: Date: Date:

ALLOCATION

Estimate No: Code No
Name of the Work ……

Ledger Head	Debit (Gross Amount) Rs P	Credit (Deduction) Rs
…….	.....	.....
Total	.....	.....

VI. Received Rs……..(Rupees……..Only) in full and final settlement of all moneys due under this contract and I / we have no further claims of this contract.

Signature of Witness
Address

Revenue Stamp
Signature of Contractor
Date:

VII . ENTRIES TO BE MADE BY TREASURY SECTION

Cash book entry no and date :

Amount Paid Rs……
Amount unpaid Rs……..
Total Rs……..

Signature of Cashier
Date:

ANNEXURE A

Part I

Statement showing details of material issued to the contractor Shri/M/s…….. In respect of Contract Agreement/Work Order No…….. Dated …….

						Whether	If recoverable from contractor						Remarks
Sl No	Stores Issue voucher No and date	Issue voucher No and date alloted by stores to the SIV	description of material issued to the contractor	Quantity issued	Quantity actually incorporated in the work	recoverable from the contractor or supplied free	Rate at which recoverable Rs	P	Amount Recoverable Rs	P	Amount recoverable upto previous bill Rs	P	Balance Now recovered Rs	P	
1	2	3	4	5	6	7	8		9		10		11		12

Total ……

Signature of Contractor
Date

Signature of Engineer in charge
Date

Signature of Senior Engineer
Date

ANNEXURE A

Part II

Statement showing details of material issued to the contractor Shri/M/s…….. in respect of Contract Agreement/Work Order No…….. Dated ……and not covered by the agreement

Sl No	Stores Issue voucher No and date	Issue voucher No and date alloted by stores to the SIV	description of material issued to the contractor	Quantity issued	Quantity actually incorporated in the work	Issue Rate Rs P	Amount Recoverable Rs P	Amount recoverable upto previous bill Rs P	Balance Now recovered Rs P	Remarks
1	2	3	4	5	6	7	8	9	10	11

Total ……

Add Departmental Charges

Add Sales Tax (wherever applicable) ……..

Total ……..

Signature of Contractor
Date

Signature of Engineer in charge
Date

Signature of Senior Engineer
Date

ANNEXURE B

Statement showing TOOLS & PLANTS issued to the contractor Shri/M/s…….. in respect of Contract Agreement/Work Order No…….. Dated …….and not covered by the agreement

Sl No	Description of tools & plants issued	Period for which issued	Rate at which Recivery is to be made	Amount recoverable Rs P	Amount recoverable upto previous bill Rs P	Balance Now recovered Rs P	Remarks
1	2	3	4	5	6	7	8

Total ……

Signature of Contractor
Date

Signature of Engineer in charge
Date

Signature of Senior Engineer
Date

ANNEXURE C

showing detail of other recoveries to be made from the contractor Shri/M/s……
nent/Work Order No……Dated……

Sr.No	Particulars	Unit	Quantity	Rate Rs. P.	Amount recoverable Rs. P	Amount recovered upto previous bill Rs. P.	Amount now recovered Rs. P.	Remarks
1	2	3	4	5	6	7	8	9
1	Water Charges							
2	Electricity Charges							
3	Seignorage Charges							
4	Medical Charges							
5	Cost of empty gunny bags and empty containers not returned							
6								
7								
8								
9								
10								
	Total							

Signature of Contractor
Date

Signature of Engineer Incharge
Date

Signature of Sr. Engineer
Date

Form WAM 7 (Contd.)

ANNEXURE D

DEVIATION STATEMENT

Name of the Contractor :
Name of the Work :

Contract Agreement/Work Order No. :
Date :

Sl. No.	Description of item	Unit	Quantity as per agreement	Quantity as executed	Rate as per agreement Rs. P.	Rate as executed Rs. P.	Amount as per agreement Rs. P.	Amount as executed Rs. P.	Difference		Reason for the deviation with authority, if any
									Excess Rs. P.	Savings Rs. P.	
1	2	3	4	5	6	7	8	9	10	11	12

Signature of Engineer in Charge
Date :

Signature of Senior Engineer
Date :

Form WAM 7 (Contd.)

ANNEXURE E

Statement showing the consumption of materials issued to the contractor Shri/M/s..... in respect of Contract Agreement/Work Order No..... Dated.....

Name of the Work :

ON RECOVERY BASIS

Sl. No.	Description of material	Unit	Quantity actually issued	Quantity actually incorporated in the work	Balance	Particulars of disposal of balance	Quantity to be issued as per approved data for work actually done	Variation in consumption (Difference between column 5 and 8)		Rate chargeable for excess/ short consumption, if any	Amount recoverable for excess/ short consumption, including materials not returned	REMARKS
								More	Less	Rs. P.	Rs. P.	
1	2	3	4	5	6	7	8	9	10	11	12	13
1.	Cement											
2.	Bricks											
3.	Wood.....											
4.	Asbestos Sheet											
5.	Iron Materials											
6.												
7.												
8.												
9.												
10.												

Signature of Contractor
Date :

Signature of Engineer in Charge
Date :

Signature of Senior Engineer
Date :

Note : 1. The quantities shown in columns 4 and 5 above should tally with those shown in columns 5 and 6 respectively of Annexure A (Part I and II).

2. Data statement of theoretical consumption should be attached in support of quantity specified in column 8.

ANNEXURE F

Statement showing detail of materials issued to the contractor Shri/M/s……
ct of Contract Agreement/Work Order No……Dated……

Name of work; **FREE OF COST**

Sr.No	Stores issue voucher No.	ription of ma	Unit	Quantity issued	Quantity requried as per data	Quantity consumed in the work	Balance(If any)	Nature of disposal for the balance	Rate chargeable for material not returned Rs.P.	Amount recoverable for material not returned Rs. P	Remarks
1	2	3	4	5	6	7	8	9	10	11	12
		Total									

Signature of Contractor
Date

Signature of Engineer Incharge
Date

Signature of Sr. Engineer
Date

Note:Data statement of therotical consumption should be attached in support of the quantity specified in coloumn 6

ANNEXURE C

QUESTIONNAIRE TO BE ANSWERED BY ENGINEER IN CHARGE AND SENIOR ENGINEER	
(Correct particulers and answers to be recorded)	
Name of the work :	
Name of the Contractor :	
Date of commencement of the work:	
Contract agreement/work ordered no. and date:	
Reference to supplementary agreement no,if any :	
Whether adminstrative approval and techanical sanction has been accorded by the cmpetent authority ? If so ,citc reference	
Whether sanction of the competent authority and financial concurrencr of the Accounts Departnment for award of the work has been accorded ? If so,cite reference.	
Wheter the work has been completed in time ? If not ,wheter penalty has been levied or sanction of the competent authority for extension of time granted and communicated to the Accounts Department with reasons for grant of extension? (Due and actual date of completion of the work and reference to letter no. and date granting the extension of time should be given)	
(a) Wheter the rates allowed in the bill have been checked with the contract agreement ? (b) Wheter the rates for extra/supplemental items have been approved by the competent authority and the sanction communicated to the accounts Department together wiht rate analysis? If so,cite reference.	
Wheter deviations have been approved by the competent authority? If yes, give reference to the approval; if not, give reasons.	
Whether the rates of recovery of stores issued to the contractor which are not provided for in the Contract Agreement have been settled in counsultation with Finance?	
Whether discrepancies pointed out by the Accounts Department in the store statement have been reconciled and accepted by the Accounts Department?	

ANNEXURE C

QUESTIONNAIRE TO BE ANSWERED BY ENGINEER IN CHARGE AND SENIOR ENGINEER	
(Correct particulers and answers to be recorded)	
Whether materials issued to the contractor in excess of the theoretical requirements have been returned to the Stores Department and the no. and date of such retuened stores vouchers have been shown in stores statement? If not ,whether the cost of such excess material has been recovered at the prescribed rate? Whethre consumption statements in respect of materials chargeabale to the work have been attached to the bill?	
Whether consumption of materials shown has been technicaly checked by Senior Engineer?	
Whether materials isshued and used in the work is not less then that required for consumption in work accroding to our specification? If comsumption is less, whether necessary recovery has been made in the bill?	
Whether mesurments have been checked by the Engineer and Sr. Engineer to the extent required and certificates of check recorded in the mesurments books?	
Whether contractor has signed the bill and the mesurments books without reservations? If not; whether resones have been intimated to the Accounts Department?	
Whethet arithmatical calculations have been checked and certificate recorded in the mesurment books by a person other than the one who calculated initially	
Whether any work was done at the risk and cost of the contractor and whether such cost has been recovered from him? Give particulers.	
Whether all advance payments on running Accounts have been recovered?	
Whether tall the recovries due to services given to the contractor like rent of accommodation, water charges, electricity charges etc. have been recovered and wheather payments made by the company on behalf of the contractor have been adjusted?	
Whether the files containing abstracts from mesurments books/ standared mesurment books have been completed/ updated?	
Whether hire charges of tools and plant have been recovered and the statement of hire charges with full details attached?	

ANNEXURE C

QUESTIONNAIRE TO BE ANSWERED BY ENGINEER IN CHARGE AND SENIOR ENGINEER	
(Correct particulers and answers to be recorded)	
Whether the certificate of workmanship and completion of work according to specifications, drawings etc. is recorded by Engineer/ Sr. Engineer and whether recoveries have been made for defective works, if any?	
Whether all corrections in the bill/measurement books etc. have been neatly made and attasted and there are no overwriting?	
Whether final measurments have been taken as soon as possibal after completion of work and the cretificate of complition issued? If not, whether resons for delay have been recorded and communicated to Accounts?	
In respect of Quintites reduced in the final bill as compare to the running payment, whether adequate reasons have been recorded and communicated to Accounts	
Whether the Expeinditure has been classified correctly according to heads of Account recorded in the sanctioned estimate?	
Whether the work has been completed within the estimated cost? If not, what is the percentage of excess over thw sanctioned estimate/ addministrative approval? In case the excess is beyond the competency of Sr. Engineer, what action has been taken for the obtaining the approval of the authority complent to sanction the excess?	
(a) If the contractor has furnished bank guarantee in lieu of cash sequrity deposit towards proper exicuation of works and guarantee against defectsduring the maintenance period, whether the period of currency of the bank guarantee cover the entire maintenance period? (b) If not, whether sequrity deposite has been proposed to be recovred from the final bill?	
Whether all the previous audit objections raised on running Account bills have been settled? If so, cite refrence.	
Signature of Engineer in Charge	Signature of Engineer in Charge
Date:	Date:

Form No: F-14 (Rev 01)

PS-	MONTHLY PLAN & REVIEW WITH CONTRACTOR	Page **1** of **6**

Name of Project		Contract No.	
Name of Work		Name of Contractor	

PART- A: PLAN/ REVIEW OF WORK FOR THE MONTH OF ……..…….. Date of Plan/ Review……

SN.	Description of Work	Unit of Measur-ement	Unit Rate	Planned (QTY Planned for the month as per Part –C of last month)		Cumulative Shortfall attributable to contractor upto last month (Refer Note 1)		Achieved		Shortfall attributable to BHEL w.r.t Plan (as per Col. 3 of Part-D)		Cumulative Shortfall attributable to Contractor upto & including this month		REMARKS (Reasons for Shortfall attributable to Contractor. Supporting documents to be kept as record.)
(a)	(b)	(c)	(d)	A		B		C		D		E=A+B-C-D		
				Phy.	Financial	Phy	Financial	Phy.	Financial	Phy.	Financial	Phy.	Financial	
	Value of Other Items not mentioned above but planned to be executed in this month													
Total					ΣA		ΣB		ΣC		ΣD		ΣE	

BHEL
(Sign with name, designation and date)

CONTRACTOR
(Sign with name, designation and date)

PS-	MONTHLY PLAN & REVIEW WITH CONTRACTOR	Page **2** of **6**

Name of Project		Contract No.	
Name of Work		Name of Contractor	

PART- A: Contd…….

Note 1: **In addition to the work planned as per Col. 'A', Contractor shall also make full efforts to minimize the 'Cumulative shortfall attributable to contractor upto the month' as mentioned in Col. 'B' by enhancing its resources, so as to achieve the completion of activities as per agreed schedule. In case contractor is not able to execute the entire shortfall, then BHEL 'Engineer in-charge', shall decide the priority of work to be executed and it shall be binding on the contractor.**

Note 2: Percentage Shortfall attributable to contractor w.r.t. **"**Plan - Shortfall attributable to BHEL**"** for the month = [(ΣE-ΣB)/(ΣA-ΣD)]x100
In case, (ΣE-ΣB) is negative, then it shall be treated as zero percent."

Note 3: Form 14 should include all items being planned in the current month, and all items against which shortfall was attributable to contractor till previous month. However, for practical reason, if it is not possible to mention some of the items in Form-14 being planned to be executed in this month, then also value of such items shall necessarily be included in calculation of Total Value.

Note 4: In case reason for shortfall attributable to contractor is w.r.t. T&P and Manpower, it should be in conformity with Part B1 and B2.

BHEL
(Sign with name, designation and date)

CONTRACTOR
(Sign with name, designation and date)

Form No: F-14 (Rev 01)

PS-	MONTHLY PLAN & REVIEW WITH CONTRACTOR	Page **3** of **6**

Name of Project		Contract No.	
Name of Work		Name of Contractor	

PART – B-1: PLAN/REVIEW OF DEPLOYMENT OF MAJOR T&Ps FOR THE MONTH OF ……..…….. Date of Plan/ Review……

CONTRACTOR'S SCOPE: -

SN.	PLAN				DEPLOYMENT STATUS			
	Major T&P to be deployed as per work planned for the month	QTY	Deployment Period (in days)	Weightage assigned to planned T&P (in fraction such that ΣC =1)	Actual Deployed Quantity	Actual Deployment Period (in days)	Weighted T&P Deployed	REMARKS (Works affected due to non-deployment of T&Ps)
		A	B	C	D	E	F=(C x D x E) / (A x B)	

Note: In case, E>B, it shall be considered as E=B. Similarly, in case D>A, it shall be considered as D=A.
Percentage of T&P Deployed = ΣF x 100

BHEL SCOPE: -

SN.	PLAN			DEPLOYMENT STATUS		
	Major T&P to be deployed as per work planned for the month	QTY	Deployment Period (in days)	Actual Deployed Quantity	Actual Deployment Period (in days)	REMARKS (Works affected due to non-deployment of T&Ps)

BHEL
(Sign with name, designation and date)

CONTRACTOR
(Sign with name, designation and date)

Form No: F-14 (Rev 01)

PS-	MONTHLY PLAN & REVIEW WITH CONTRACTOR	Page **4** of **6**

Name of Project		Contract No.	
Name of Work		Name of Contractor	

PART – B-2: PLAN/ REVIEW OF DEPLOYMENT OF MANPOWER FOR THE MONTH OF ……..…….. Date of Plan/ Review……

CONTRACTOR'S SCOPE: -

SN.	Area of Work	Category of Labour	No. of Labour required as per category	Deployment Period (in days)	No. of Labour actually deployed	Actual Deployment Period (in days)	REMARKS **(**Works affected due to non-availability of labour)
			A	B	C	D	

Percentage of Manpower Deployed=100 x Σ(CxD)/Σ(AxB)

BHEL
(Sign with name, designation and date)

CONTRACTOR
(Sign with name, designation and date)

Form No: F-14 (Rev 01)

PS-	MONTHLY PLAN & REVIEW WITH CONTRACTOR	Page **5** of **6**

Name of Project		Contract No.	
Name of Work		Name of Contractor	

PART – C: PLAN(PHYSICAL) FOR THE NEXT MONTH i.e. ……..…….. Date of Plan ……

SN.	Description of work	Original Planned Quantity	Planned Quantity (excluding shortfalls attributable to contractor till date)	Unit of Measu-rement	T&Ps Required				Manpower Required		REMARKS (Reasons for difference in Original Planned Quantity w.r.t. Planned quantity to be given)
					Contractor Scope		BHEL Scope		Category of Labour	No. of Labour required as per Category	
					Major T&P to be deployed as per work planned for the month	Quantity	Major T&P to be deployed as per work planned for the month	Quantity			

Note 1: Planned quantity should be based on available/ expected fronts/ inputs in the next month

Note 2: "Original Planned Quantity" shall be as per latest jointly agreed programme between BHEL and Contractor before commencement of work or at the time of latest Time Extension, as the case may be.

BHEL
(Sign with name, designation and date)

CONTRACTOR
(Sign with name, designation and date)

Form No: F-14 (Rev 01)

PS-	MONTHLY PLAN & REVIEW WITH CONTRACTOR	Page **6** of **6**

Name of Project		Contract No.	
Name of Work		Name of Contractor	

PART – D: REASONS FOR SHORTFALL ATTRIBUTABLE TO BHEL IN RESPECT OF PLAN FOR THE MONTH……

SN.	Description of Work (from Part-A)	Quantities Affected		Reasons for Shortfall attributable to BHEL	Agency responsible for reasons for Shortfall	Remarks (Supporting Documents in respect of agency responsible)
		(Physical Quantity)	Unit of Measu-rement			
1	2	3	4	5	6	7

Note1: Reasons for shortfall shall include non-availability of fronts/ drawings/ materials/ T&P (BHEL Scope)/ clearances etc. and other hindrances for which contractor is not responsible.

Note2: Agency responsible may be BHEL Site/ MUs/ Design Centre/ BHEL Customer/ other Contractors etc.

BHEL
(Sign with name, designation and date)

BANK GUARANTEE FOR PERFORMANCE SECURITY

Bank Guarantee No:

Date:

To

NAME

& ADDRESSES OF THE BENEFICIARY

Dear Sirs,

In consideration of the Bharat Heavy Electricals Limited (hereinafter referred to as the 'Employer' which expression shall unless repugnant to the context or meaning thereof, include its successors and permitted assigns) incorporated under the Companies Act, 1956 and having its registered office at BHEL House, Siri Fort, Asiad, New Delhi – 110049 through its Unit at Bharat Heavy Electricals Limited, Power Sector Eastern Region, BHEL Bhawan, Plot No 9/1, DJ Block, Sector-II, Salt lake City, Kolkata – 700091 having awarded to (Name of the Vendor / Contractor / Supplier) having its registered office at_____[1] hereinafter referred to as the 'Contractor/Supplier', which expression shall unless repugnant to the context or meaning thereof, include its successors and permitted assigns), a contract Ref No……dated ……[2] valued at Rs……[2] (Rupees ----------)for <Nature of Work>[3] (hereinafter called the 'Contract') and the Contractor having agreed to provide a Contract Performance Guarantee, equivalent to ……% (…. Percent) of the said value of the Contract to the Employer for the faithful performance of the Contract,

we, ……, (hereinafter referred to as the Bank), having registered/Head office at …….. and inter alia a branch at …… being the Guarantor under this Guarantee, hereby, irrevocably and unconditionally undertake to forthwith and immediately pay to the Employer a maximum amount Rs ---------- (Rupees ----------)[4] without any demur, immediately on a demand from the Employer, .

Any such demand made on the Bank shall be conclusive as regards the amount due and payable by the Bank under this guarantee. However, our liability under this guarantee shall be restricted to an amount not exceeding Rs. _____ _____.

We undertake to pay to the Employer any money so demanded notwithstanding any dispute or disputes raised by the Contractor/ Supplier in any suit or proceeding pending before any Court or Tribunal relating thereto our liability under this present being absolute and unequivocal.

The payment so made by us under this Guarantee shall be a valid discharge of our liability for payment thereunder and the contractors/supplier shall have no claim against us for making such payment.

We the ……bank further agree that the guarantee herein contained shall remain in full force and effect during the period that would be taken for the performance of the said Contract and that it shall continue to be enforceable till all the dues of the Employer under or by virtue of the said Contract have been fully paid and its claims satisfied or discharged.

We …….. BANK further agree with the Employer that the Employer shall have the fullest liberty without our consent and without affecting in any manner our obligations hereunder to vary any of the terms and conditions of the said Contract or to extend time of performance by the said Contractor/Supplier from time to time or to postpone for any time or from time to time any of the powers exercisable by the Employer against the said Contractor/Supplier and to forbear or enforce any of the terms and conditions relating to the said Agreement and we shall not be relieved from our liability by reason of any such variation, or extension being granted to the said Contractor/Supplier or for any forbearance, act or omission on the part of the Employer or any indulgence by the Employer to the said Contractor/Supplier or by any such matter or thing whatsoever which under the law relating to sureties would but for this provision have effect of so relieving us.

The Bank also agrees that the Employer at its option shall be entitled to enforce this Guarantee against the Bank as a principal debtor, in the first instance without proceeding against the Contractor and notwithstanding any security or other guarantee that the Employer may have in relation to the Contractor's liabilities.

This Guarantee shall remain in force upto and including…….. [5] and shall be extended from time to time for such period as may be desired by Employer.
This Guarantee shall not be determined or affected by liquidation or winding up, dissolution or change of constitution or insolvency of the Contractor/Supplier but shall in all respects and for all purposes be binding and operative until payment of all money payable to the Employer in terms thereof.

Unless a demand or claim under this guarantee is made on us in writing on or before the ……[6] (3 months more than the present date of validity of Bank Guarantee) we shall be discharged from all liabilities under this guarantee thereafter.

We, …… BANK lastly undertake not to revoke this guarantee during its currency except with the previous consent of the Employer in writing.
Notwithstanding anything to the contrary contained hereinabove:

a) The liability of the Bank under this Guarantee shall not exceed…… [7]

b) This Guarantee shall be valid up to ……[8]

c) Unless the Bank is served a written claim or demand on or before _____[9] (3 months more than the present date of validity of Bank Guarantee) all rights under this guarantee shall be forfeited and the Bank shall be relieved and discharged from all liabilities under this guarantee irrespective of whether or not the original bank guarantee is returned to the Bank.

We, _____ Bank, have power to issue this Guarantee under law and the undersigned as a duly authorized person has full powers to sign this Guarantee on behalf of the Bank.

Any claim or dispute arising under the terms of this document shall only be enforced or settled in the courts of at Kolkata only.

For and on behalf of
(Name of the Bank)

Dated…….

Place of Issue…….

[1] NAME AND ADDRESS OF THE VENDOR /CONTRACTOR / SUPPLIER.

[2] DETAILS ABOUT THE NOTICE OF AWARD/CONTRACT REFERENCE

[3] PROJECT/SUPPLY DETAILS

[4] BG AMOUNT IN FIGURES AND WORDS

[5] VALIDITY DATE

[6] DATE OF EXPIRY OF CLAIM PERIOD

[7] BG AMOUNT IN FIGURES AND WORDS.

[8] VALIDITY DATE

[9] DATE OF EXPIRY OF CLAIM PERIOD

Note:

1. **Units are advised that expiry of claim period may be kept 2/3 months after validity date.**

2. **In Case of Bank Guarantees submitted by Foreign Vendors-**

   a. **From Nationalized/Public Sector / Private Sector/ Foreign Banks (BG issued by Branches in India)** can be accepted subject to the condition that the Bank Guarantee should be enforceable in the town/city or at nearest branch where the Unit is located i.e. Demand can be presented at the Branch located in the town/city or at nearest branch where the Unit is located.

b. From Foreign Banks (wherein Foreign Vendors intend to provide BG from local branch of the Vendor country's Bank)

b.1 In such cases, in the Tender Enquiry/ Contract itself, it may be clearly specified that Bank Guarantee issued by **any of the Consortium Banks only** will be accepted by BHEL. As such, Foreign Vendor needs to make necessary arrangements for issuance of Counter- Guarantee by Foreign Bank in favour of the Indian Bank (BHEL's Consortium Bank). It is advisable that all charges for issuance of Bank Guarantee/ counter- Guarantee should be borne by the Foreign Vendor. The tender stipulation should clearly specify these requirements.

b.2 **In case, Foreign Vendors intend to provide BG from** Overseas Branch of our Consortium Bank (e.g. if a BG is to be issued by SBI Frankfurt), the same is acceptable. However, the procedure at **sl.no. b.1** will required to be followed.

b.3 The BG issued may preferably be subject to Uniform Rules for Demand Guarantees (URDG) 758 (as amended from time to time). In case, of Foreign Vendors, the BG Format provided to them should clearly specify the same.

b.4 The BG should clearly specify that the demand or other document can be presented in electronic form.

BANK GUARANTEE FOR SECURITY DEPOSIT CUM PERFORMANCE BANK GUARANTEE BOND

B.G. NO. Date

This deed of Guarantee made this ---------- day of ----------two thousand ----- by <Name and Address of Bank> hereinafter called the "The Guarantor" (which expression shall unless repugnant to the context or meaning thereof be deemed to include its successors and assigns) in favour of M/s Bharat Heavy Electrical Limited (A Govt. of India Undertaking) a company incorporated under the Companies Act, 1956, having its registered office at BHEL House, Siri Fort, Asiad, New Delhi – 110049 through its unit at <**Addr□□□ □□P□□ □r S□□□□r R□□□□□[1]**> hereinafter called "The Company" (which expression shall unless repugnant to the context or meaning thereof be deemed to include its successors and assigns)

WHEREAS < Contractor's Name and Address> (hereinafter referred to as the Contractor) have entered into a contract arising out of Letter of Intent no. < LOI REF & Date > (hereinafter referred to as "the contract") for < Name of Work > with the company.

AND WHEREAS the contract inter-alia provides that the contractor shall furnish to the company a sum of Rs.---------- (Rupees----------) towards security deposit for due and faithful performance of the contract in the form and manner specified therein.

AND WHEREAS the contractor has approached the Guarantor and in consideration of the arrangement arrived at between the contractor and the Guarantor, the Guarantor has agreed to give the Guarantee as hereinafter mentioned in favour of the company.

The Guarantor do hereby guarantee to the company the due and faithful performance, observance or discharge of the Contract by the contractor and further unconditionally and irrevocably undertake to pay to the Company without demur and merely on a demand, to the extent of Rs.----------(Rupees----------) against any claim by the company on them for any loss, damage, costs, charges and expenses caused to or suffered by the company by reasons of the contractor making any default in the performance, observance or discharge of the terms, conditions, stipulations or undertakings or any of them as contained in the contract.

The decision of the company whether any default has occurred or has been committed by the contractor in the performance, observance or discharge of any of the terms, conditions, stipulations or undertakings or any one of them as contained in the contract and / or as to the extent of loss, damage, costs, charges and expenses caused to or suffered by the company by reason of the contractor making any default in the performance, observance or discharge of any of the terms, conditions, stipulations or undertakings or any one of them shall be conclusive and binding on the Guarantor irrespective of the fact whether the contractor admits or denies the default or questions the correctness of any demand made by the company in any Court, Tribunal or Arbitration proceedings or before any other Authority.

The company shall have the fullest liberty without affecting in any way the liability of the Guarantor under this Guarantee, from time to time to vary any of the terms and conditions of the contract or extend time of performance by the contractor or to postpone for any time and from time to time any of the powers exercisable by it against the contractor and either enforce or forebear from enforcing any of the terms and conditions governing the contract or securities available to the company and the Guarantor shall not be released from its liability under these presents by any exercise by the company of the liberty with reference to the matters aforesaid or by reasons of time being given to the contractor or any other forbearance, act or commission on the part of the company or any indulgence by the company to the contractor or any other matter or thing whatsoever which under the law relating to sureties would, but for this provision have the effect of so releasing the Guarantor from its liability under this guarantee.

The Guarantor further agrees that the Guarantee herein contained shall remain in full force and effect during the period that would be taken for the performance of the contract and its claim satisfied or discharged and till the company certifies that the terms and conditions of the contract have been fully and properly carried out by the contractor and accordingly discharges this Guarantee, subject however, that the company shall have no claim under this Guarantee after ---------- i.e. (3 months more than the present date of validity of Bank Guarantee unless the date of validity of this Bank Guarantee is further extended from time to time, as the case may be) unless a notice of the claim under this Guarantee has been served on the Guarantor before the expiry of the said period in which case the same shall be enforceable against the Guarantor not withstanding the fact that the same is enforced after the expiry of the said period.

BANK GUARANTEE FOR SECURITY DEPOSIT CUM PERFORMANCE BANK GUARANTEE BOND

The Guarantor undertakes not to revoke this Guarantee during the period it is in force except with the previous consent of the Company in writing and agrees that any liquidation or winding up or insolvency or dissolution or any change in the constitution of the contractor or the Guarantor shall not discharge the Guarantor's liability hereunder.

It shall not be necessary for the company to proceed against the contractor before proceeding against the Guarantor and the Guarantee herein contained shall be enforceable against them notwithstanding any security which the Company may have obtained or obtain from the Contractor shall at the time when proceedings are taken against the Guarantor hereunder be outstanding or unrealized.

Notwithstanding anything contained herein before, our liability under the Guarantee is restricted to Rs.---------- (Rupees----------). Our guarantee shall remain inforce until ----------, i.e. (the present date of validity of Bank Guarantee unless the date of validity of this Bank Guarantee is further extended from time to time) unless a claim or demand under this guarantee is made against us on or before ---------- (3 Months more than the validity date) we shall be discharged from our liabilities under this Guarantee thereafter.

Any claim or dispute arising under the terms of this documents shall only be enforced or settled in the courts of at < **N□□ □ □□□□□□□□[2]** > only.

The Guarantor hereby declares that it has power to execute this guarantee and the executant has full powers to do so on behalf of the Guarantor.

IN WITNESS whereof the ---------- (Bank) has hereunto set and subscribed its hand the day, month and year first, above written.

(Name of the Bank)

Signed for and on behalf of the Bank
(Designation of the Authorized Person Signing the Guarantee)

(Signatory No.----------)

DATED:

SEAL

==========

Notes :

1. **Addr□□□ □□P□□ □r S□□□□r R□□□□□ (□□□□□□□□ □□□ T□□d□r)** is as below:
   - PSNR : Bharat Heavy Electricals Limited, Power Sector Northern Region, HRDI & PSNR Complex, Plot No 25, Sector 16-A, Noida – 201 301 (Uttar Pradesh)
   - PSER : Bharat Heavy Electricals Limited, Power Sector Eastern Region, BHEL Bhawan, Plot No 9/1, DJ Block, Sector-II, Salt lake City, Kolkata – 700 091
   - PSWR: Bharat Heavy Electricals Limited, Power Sector Western Region, Shree Mohini Complex, 345 Kingsway, Nagpur 440 001
   - PSSR: Bharat Heavy Electricals Limited, Power Sector Southern Region, 690, Anna Salai, Nandanam, Chennai 600 035

2. **N□□ □ □□□□□□□□ (□□r □□r□□d□□□□□□ □□C□□r□□)** is as below:
   - PSNR : Delhi
   - PSER : Kolkata
   - PSWR: Nagpur
   - PSSR : Chennai

3. The BG shall be executed on non-judicial stamp papers of adequate value procured in the name of the Bank in the State where the Bank is located.

4. The BG is required to be sent by the executing Bank directly to BHEL at the address where tender is submitted / accepted under sealed cover.

BANK GUARANTEE FOR RELEASE OF AMOUNTS WITHHED/LIQUIDATED DAMAGES AMOUNT

Bank Guarantee No:

Date:

To

NAME

& ADDRESSES OF THE BENEFICIARY

Dear Sirs,

In consideration of the Bharat Heavy Electricals Limited [1](hereinafter referred to as the 'Employer' which expression shall unless repugnant to the context or meaning thereof, include its successors and permitted assigns) incorporated under the Companies Act, 1956 and having its registered office at BHEL House, Siri Fort, Asiad, New Delhi – 110049 through its Unit at Bharat Heavy Electricals Limited, Power Sector Eastern Region, BHEL Bhawan, Plot No 9/1, DJ Block, Sector-II, Salt lake City, Kolkata – 700091 having awarded to (Name of the Vendor / Contractor / Supplier) incorporated under the ……..having its registered office at_____ [1](hereinafter referred to as the 'Contractor', which expression shall unless repugnant to the context or meaning thereof, include its successors and permitted assigns), a contract Ref No……dated ……..[2]valued at Rs……(Rupees ----------) for <Nature of Work>[3](hereinafter called the 'Contract')

The Contractor as per Contract should have completed the work/ supplies under the contract by……..(date). As per terms and conditions of the Contract, the Employer is entitled to levy Liquidated Damages (LD) for delays and the Employer has withheld an amount of Rs ……..by way of LD as per the Contract. Now, on the request of the Contractor, the Employer having agreed to release the amount of Rs……..withheld from the Contractor's invoices as Liquidated damages under the terms and conditions of the Contract on production of a Bank Guarantee for Rs._____ (Rupees……only) [4]

We, ……, (hereinafter referred to as the Bank), having registered/Head office at …….. and inter alia a branch at …… being the Guarantor under this Guarantee, hereby irrevocably and unconditionally undertake to forthwith and immediately pay to the Employer a maximum amount of Rs ---------- (Rupees ----------) without any demur, merely on a demand from the Employer

Any such demand made on the Bank shall be conclusive as regards the amount due and payable by the Bank under this guarantee. However, our liability under this guarantee shall be restricted to an amount not exceeding Rs. _____

We undertake to pay to the Employer any money so demanded notwithstanding any dispute or disputes raised by the Contractor/ Supplier in any suit or proceeding pending before any Court or Tribunal relating thereto our liability under this present being absolute and unequivocal.

The payment so made by us under this Guarantee shall be a valid discharge of our liability for payment thereunder and the contractors/supplier shall have no claim against us for making such payment.

We the ……bank further agree that the guarantee herein contained shall remain in full force and effect during the period that would be taken for the performance of the said Contract and that it shall continue to be enforceable till all the dues of the Employer under or by virtue of the said Contract have been fully paid and its claims satisfied or discharged.

We …….. BANK further agree with the Employer that the Employer shall have the fullest liberty without our consent and without affecting in any manner our obligations hereunder to vary any of the terms and conditions of the said Contract or to extend time of performance by the said Contractor/Supplier from time to time or to postpone for any time or from time to time any of the powers exercisable by the Employer against the said Contractor/Supplier and to forbear or enforce any of the terms and conditions relating to the said Agreement and we shall not be relieved from our liability by reason of any such variation, or extension being granted to the said Contractor/Supplier or for any forbearance, act or omission on the part of the Employer or any indulgence by the Employer to the said Contractor/Supplier or by any such matter or thing whatsoever which under the law relating to sureties would but for this provision have effect of so relieving us.
The Bank also agrees that the Employer at its option shall be entitled to enforce this Guarantee against the Bank as a principal debtor, in the first instance without proceeding against the Contractor and notwithstanding any security or other guarantee that the Employer may have in relation to the Contractor's/ Supplier's liabilities.

This Guarantee shall remain in force upto and including…….. [5] and shall be extended from time to time for such period as may be desired by Employer.
This Guarantee shall not be determined or affected by liquidation or winding up, dissolution or change of constitution or insolvency of the Contractor/Supplier but shall in all respects and for all purposes be binding and operative until payment of all money payable to the Employer in terms thereof.

Unless a demand or claim under this guarantee is made on us in writingon or before the ……[6] (3 months more than the present date of validity of Bank Guarantee) we shall be discharged from all liabilities under this guarantee thereafter.

We, …… BANK lastly undertake not to revoke this guarantee during its currency except with the previous consent of the Employer in writing.

Notwithstanding anything to the contrary contained hereinabove:

a) The liability of the Bank under this Guarantee shall not exceed…… [7]
b) This Guarantee shall be valid up to ……[8]
c) Unless the Bank is served a written claim or demand on or before _____[9] (3 months more than the present date of validity of Bank Guarantee) all rights under this guarantee shall be forfeited and the Bank shall be relieved and discharged from all liabilities under this guarantee irrespective of whether or not the original bank guarantee is returned to the Bank.

We, _____ Bank, have power to issue this Guarantee under law and the undersigned as a duly authorized person has full powers to sign this Guarantee on behalf of the Bank.

Any claim or dispute arising under the terms of this document shall only be enforced or settled in the courts of at Kolkata only.

For and on behalf of
(Name of the Bank)

Dated…….

Place of Issue…….

[1] *NAME AND ADDRESS OF THE VENDOR /CONTRACTOR / SUPPLIER.*

[2] *DETAILS ABOUT THE NOTICE OF AWARD/CONTRACT REFERENCE*

[3] *PROJECT/SUPPLY DETAILS*

[4] *BG AMOUNT IN FIGURES AND WORDS*

[5] *VALIDITY DATE*

[6] *DATE OF EXPIRY OF CLAIM PERIOD*

[7] *BG AMOUNT IN FIGURES AND WORDS.*

[8] *VALIDITY DATE*

[9] *DATE OF EXPIRY OF CLAIM PERIOD*

Note:

1. **Units are advised that expiry of claim period may be kept 2/3 months after validity date.**

2. **In Case of Bank Guarantees submitted by Foreign Vendors-**

   a. **From Nationalized/Public Sector / Private Sector/ Foreign Banks (BG issued by Branches in India)** can be accepted subject to the condition that the Bank Guarantee should be enforceable in the town/city or at nearest branch where the Unit is located i.e. Demand can be presented at the Branch located in the town/city or at nearest branch where the Unit is located.

   b. **From Foreign Banks (wherein Foreign Vendors intend to provide BG from local branch of the Vendor country's Bank)**

   b.1 In such cases, in the Tender Enquiry/ Contract itself, it may be clearly specified that Bank Guarantee issued by **any of the Consortium Banks only** will be accepted by BHEL. As such, Foreign Vendor needs to make necessary arrangements for issuance of Counter- Guarantee by Foreign Bank in favour of the Indian Bank (BHEL's Consortium Bank). It is advisable that all charges for issuance of Bank Guarantee/ counter- Guarantee should be borne by the Foreign Vendor. The tender stipulation should clearly specify these requirements.

   b.2 **In case, Foreign Vendors intend to provide BG from** Overseas Branch of our Consortium Bank (e.g. if a BG is to be issued by SBI Frankfurt), the same is acceptable. However, the procedure at **sl.no. b.1** will required to be followed.

   b.3 The BG issued may preferably be subject to Uniform Rules for Demand Guarantees (URDG) 758 (as amended from time to time). In case, of Foreign Vendors, the BG Format provided to them should clearly specify the same.

   b.4 The BG should clearly specify that the demand or other document can be presented in electronic form.

BANK GUARANTEE FOR SUPPLY FREE ISSUE MATERIAL.

Bank Guarantee No:

Date:

To

NAME

& ADDRESSES OF THE BENEFICIARY

Dear Sirs,

In consideration of the Bharat Heavy Electricals Limited (hereinafter referred to as the 'Employer' which expression shall unless repugnant to the context or meaning thereof, include its successors and permitted assigns) incorporated under the Companies Act, 1956 and having its registered office at BHEL House, Siri Fort, Asiad, New Delhi – 110049 through its Unit at Bharat Heavy Electricals Limited, Power Sector Eastern Region, BHEL Bhawan, Plot No 9/1, DJ Block, Sector-II, Salt lake City, Kolkata – 700091 having awarded to (Name of the Vendor / Contractor / Supplier).having its registered office at_____ [1] (hereinafter referred to as the 'Contractor/Supplier/Fabricator' which expression shall unless repugnant to the context or meaning thereof, include its successors and permitted assigns), a contract Ref. No.……dated ……[2] valued at Rs.……(Rupees ----------) for <Nature of Work>[3] (hereinafter called the 'Contract')

and, the Employer having agreed as per the terms and conditions of the Contract to supply free issue material costing Rs._____ for the manufacture/fabrication of the equipment at the Contractor's site on on furnishing a Bank Guarantee for Rs._____ (Rupees……..)[4] in the manner hereinafter specified for the due safeguard of the free issue material,

we, ……, (hereinafter referred to as the Bank), having registered/Head office at …… and inter alia a branch at …… being the Guarantor under this Guarantee, hereby irrevocably and unconditionally undertake to forthwith and immediately pay to the Employer a maximum amount of Rs ---------- (Rupees ----------) without any demur, merely on a demand from the Employer, .

Any such demand made on the Bank shall be conclusive as regards the amount due and payable by the Bank under this guarantee. However, our liability under this guarantee shall be restricted to an amount not exceeding Rs. _____

We undertake to pay to the Employer any money so demanded notwithstanding any dispute or disputes raised by the Contractor/ Supplier in any suit or proceeding pending before any Court or Tribunal relating thereto our liability under this present being absolute and unequivocal.

The payment so made by us under this Guarantee shall be a valid discharge of our liability for payment hereunder and the Contractors/Supplier shall have no claim against us for making such payment.

We the ……Bank further agree that the guarantee herein contained shall remain in full force and effect during the period that would be taken for the performance of the said Contract and that it shall continue to be enforceable till all the dues of the Employer under or by virtue of the said Contract have been fully paid and its claims satisfied or discharged.

We …….. Bank further agree that the Employer shall have the fullest liberty without our consent and without affecting in any manner our obligations hereunder to vary any of the terms and conditions of the said Contract or to extend time of performance by the said Contractor/Supplier from time to time or to postpone for any time or from time to time any of the powers exercisable by the Employer against the said Contractor/Supplier and to forbear or enforce any of the terms and conditions relating to the said Agreement and we shall not be relieved from our liability by reason of any such variation, or extension being granted to the said Contractor/Supplier or for any forbearance, act or omission on the part of the Employer or any indulgence by the Employer to the said Contractor/Supplier or by any such matter or thing whatsoever which under the law relating to sureties would but for this provision have effect of so relieving us.

The Bank also agrees that the Employer at its option shall be entitled to enforce this Guarantee against the Bank as a principal debtor, in the first instance without proceeding against the Contractor/Supplier/ Fabricator and notwithstanding any security or other guarantee that the Employer may have in relation to the Contractor's/Supplier's/ Fabricator's liabilities.

This Guarantee shall remain in force upto and including…….. [5] and shall be extended from time to time for such period as may be desired by Employer.

This Guarantee shall not be determined or affected by liquidation or winding up, dissolution or change of constitution or insolvency of the Contractor/ Supplier/ Fabricator but shall in all respects and for all purposes be binding and operative until payment of all money payable to the Employer in terms thereof.

Unless a demand or claim under this guarantee is made on us in writing on or before the ……[6] (3 months more than the present date of validity of Bank Guarantee) we shall be discharged from all liabilities under this guarantee thereafter.

We, …… BANK lastly undertake not to revoke this guarantee during its currency except with the previous consent of the Employer in writing.

Notwithstanding anything to the contrary contained hereinabove:

a) The liability of the Bank under this Guarantee shall not exceed…… [7]
b) This Guarantee shall be valid up to ……[8]
c) Unless the Bank is served a written claim or demand on or before _____[9] (3 months more than the present date of validity of Bank Guarantee) all rights under this guarantee shall be forfeited and the Bank shall be relieved and discharged from all liabilities under this guarantee irrespective of whether or not the original bank guarantee is returned to the Bank.

We, _____ Bank, have power to issue this Guarantee under law and the undersigned as a duly authorized person has full powers to sign this Guarantee on behalf of the Bank.

Any claim or dispute arising under the terms of this document shall only be enforced or settled in the courts of at Kolkata only.

For and on behalf of
(Name of the Bank)

Dated…….

Place of Issue…….

[1] NAME AND ADDRESS OF THE VENDOR /CONTRACTOR / SUPPLIER .

[2] DETAILS ABOUT THE NOTICE OF AWARD/CONTRACT REFERENCE

[3] PROJECT/SUPPLY DETAILS

[4] BG AMOUNT IN FIGURES AND WORDS

[5] VALIDITY DATE

[6] DATE OF EXPIRY OF CLAIM PERIOD

[7] BG AMOUNT IN FIGURES AND WORDS.

[8] VALIDITY DATE

[9] DATE OF EXPIRY OF CLAIM PERIOD

Note:

1. **Units are advised that expiry of claim period may be kept 2/3 months after validity date.**

2. **In Case of Bank Guarantees submitted by Foreign Vendors-**

   a. **From Nationalized/Public Sector / Private Sector/ Foreign Banks (BG issued by Branches in India)** can be accepted subject to the condition that the Bank Guarantee should be enforceable in the town/city or at nearest branch where the Unit is located i.e. Demand can be presented at the Branch located in the town/city or at nearest branch where the Unit is located.

   b. **From Foreign Banks (wherein Foreign Vendors intend to provide BG from local branch of the Vendor country's Bank)**

   b.1 In such cases, in the Tender Enquiry/ Contract itself, it may be clearly specified that Bank Guarantee issued by **any of the Consortium Banks only** will be accepted by BHEL. As such, Foreign Vendor needs to make necessary arrangements for issuance of Counter- Guarantee by Foreign Bank in favour of the Indian Bank (BHEL's Consortium Bank). It is advisable that all charges for issuance of Bank Guarantee/ counter- Guarantee should be borne by the Foreign Vendor. The tender stipulation should clearly specify these requirements.

   b.2 **In case, Foreign Vendors intend to provide BG from** Overseas Branch of our Consortium Bank (e.g. if a BG is to be issued by SBI Frankfurt), the same is acceptable. However, the procedure at **sl.no. b.1** will required to be followed.

   b.3 The BG issued may preferably be subject to Uniform Rules for Demand Guarantees (URDG) 758 (as amended from time to time). In case, of Foreign Vendors, the BG Format provided to them should clearly specify the same.

   b.4 The BG should clearly specify that the demand or other document can be presented in electronic form.

PROFORMA OF BANK GUARANTEE FOR EARNEST MONEY

(O□ □□□-□□d□□□□□□□□r □□□□r□□r□□□ □□□□□)

B□□□ G□□r□□□□□ N□□ □ □ □ □ □ □ .

D□□□□ □ □ □ □ □ □ □ □ □ □ □ □ □ □ □ .

T□

(Employer's Name and Address)
……..

Dear Sirs,

In accordance with the terms and conditions of your Invitation for Bids/Notice Inviting Tender No……[1](Tender Conditions) M/s. ……. having its registered office at ……[2] (hereinafter referred to as the '**T□□d□r□r**'), is submitting its bid for the work of□ □ □ □ □ □ □ □ . for……[3]. at Bharat Heavy Electricals Limited, Power Sector Eastern Region, BHEL Bhawan, Plot No 9/1, DJ Block, Sector-II, Salt lake City, Kolkata – 700091.[4](name of the Employer)
The Tender Conditions provide that the **T□□d□r□r** shall pay a sum of Rs □ □ □ □ □ □ □ □ □ . as Earnest Money Deposit in the form therein mentioned. The form of payment of Earnest Money Deposit includes Bank Guarantee executed by a Scheduled Bank.

In lieu of the stipulations contained in the aforesaid Tender Conditions that an irrevocable and unconditional Bank Guarantee against Earnest Money Deposit for an amount of .....[5] ..... is required to be submitted by the Tenderer as a condition precedent for participation in the said Tender and the Tenderer having approached us for giving the said Guarantee,,

we, the .....*[Name & address of the Bank]* ..... having our Head Office at ……..(hereinafter referred to as the Bank) being the Guarantor under this Guarantee, hereby irrevocably and unconditionally undertake to forthwith and immediately pay to the Employer without any demur, merely on your first demand any sum or sums of Rs. [5] .....(*).....without any reservation, protest, and recourse and without the beneficiary needing to prove or demonstrate reasons for its such demand. Any such demand made by the 'Employer' shall be

conclusive and binding on us irrespective of any dispute or difference raised by the Tenderer.

The payment so made by us under this Guarantee shall be a valid discharge of our liability for payment hereunder and the Tenderer shall have no claim against us for making such payment.

We …….. Bank further agree that the Employer shall have the fullest liberty without our consent and without affecting in any manner our obligations hereunder to vary any of the terms and conditions of the said Tender or to extend the time of submission of bids from time to time or to postpone for any time or from time to time any of the powers exercisable by the Employer against the said Tenderer and we shall not be relieved from our liability by reason of any such variation, or extension being granted to the said Tendered or for any forbearance, act or omission on the part of the Employer or any indulgence by the Employer to the said Tenderer or by any such matter or thing whatsoever which under the law relating to sureties would but for this provision have effect of so relieving us.

The Bank also agrees that the Employer at its option shall be entitled to enforce this Guarantee against the Bank as a principal debtor, in the first instance without proceeding against the Tenderer and notwithstanding any security or other guarantee that the Employer may have in relation to the Tenderer's liabilities.

This Guarantee shall be irrevocable and shall remain in force upto and including……[6] and shall be extended from time to time for such period as may be desired by the Employer.

This Guarantee shall not be determined or affected by liquidation or winding up, dissolution or change of constitution or insolvency of the Tenderer but shall in all respects and for all purposes be binding and operative until payment of all money payable to the Employer in terms hereof. However, unless a demand or claim under this Guarantee is made on us in writing on or before the ……[7] we shall be discharged from all liabilities under this Guarantee.

We, ……. Bank lastly undertake not to revoke this guarantee during its currency except with the previous consent of the Employer in writing.

Notwithstanding anything to the contrary contained hereinabove:

a) The liability of the Bank under this Guarantee shall not exceed……[5]…..

b) This Guarantee shall be valid up to ……[6]

c) Unless the Bank is served a written claim or demand on or before _____[7] all rights under this guarantee shall be forfeited and the Bank shall be relieved and discharged from all liabilities under this guarantee irrespective of whether or not the original bank guarantee is returned to the Bank

We, _____ Bank, have power to issue this Guarantee under law and the undersigned as a duly authorized person has full powers to sign this Guarantee on behalf of the Bank.

For and on behalf of

(Name of the Bank)

Date……

Place of Issue……

[1] Details of the Invitation to Bid/Notice Inviting Tender

[2] Name and Address of the Tenderer

[3] Details of the Work

[4] Name and Address of BHEL Unit/Division/Region (Already filled up)

[5] BG Amount in words and Figures

[6] Validity Date

[7] Date of Expiry of Claim Period

N□□□:

1. **U□□□ □r□ □d□□□□d □□□□ □□□□r□ □□ □□□□□□ □□r□□d □ □□ □□ □□□□□ 2□□ □ □□□□□□ □□□□r □□□□d□□□ d□□□. A□ □□r W□r□□ P□□□□□□□□□□ B□□□ G□□r□□□□□□ □□□□□□□□□ □□□□d □□r □□□□□□□□ □□□□ □ □□□□□□.**

2. **I□ C□□□ □□B□□□ G□□r□□□□□□□ □□□□□ □□□□d □□ F□r□□□□ □□□d□r□-**

□. **Fr□□ N□□□□□□□□d□P□□□□ S□□□r □Pr□□□□ S□□□r□F□r□□□ B□□□□ (BG □□□□d □□ Br□□□□□ □□ I□d□)** can be accepted subject to the condition that the Bank Guarantee should be enforceable in the town/city or at nearest branch where the Unit is located i.e. Demand can be presented at the Branch located in the town/city or at nearest branch where the Unit is located.

□. **Fr□□ F□r□□□ B□□□□ (□ □□r□□ F□r□□□ □□d□r □□□d □□ □r□□d□ BG r□□ □□□□□r□□□ □□□□ □□d□r □□□□r□□ B□□□)**

□.1 In such cases, in the Tender Enquiry/ Contract itself, it may be clearly specified that Bank Guarantee issued by □□□ □□□□ **C□□□r□□ B□□□** □□□ will be accepted by BHEL. As such, Foreign Vendor needs to make necessary arrangements for issuance of Counter- Guarantee by Foreign Bank in favour of the Indian Bank (BHEL's Consortium Bank). It is advisable that all charges for issuance of Bank Guarantee/ counter-Guarantee should be borne by the Foreign Vendor. The tender stipulation should clearly specify these requirements.

□.2 I□ □□□□□**F□r□□□** □□□d□r□ □□□d **□r□□d□ BG** r□□ Overseas Branch of our Consortium Bank (e.g. if a BG is to be issued by SBI Frankfurt), the same is acceptable. However, the procedure at □.□□. □.1 will required to be followed.

□.□ The BG issued may preferably be subject to Uniform Rules for Demand Guarantees (URDG) 758 (as amended from time to time). In case, of Foreign Vendors, the BG Format provided to them should clearly specify the same.

□.4 The BG should clearly specify that the demand or other document can be presented in electronic form.

Form for getting payment through RTGS (Real Time Gross Settlement)

01.	*Name of Vendor*	BHARAT HEAVY ELECTRICALS LTD.
02.	*Address*	~~BHEL~~ BHEL HOUSE, SIRI FORT, N.DELHI
03.	*Vendors Bank A/c Name*	BHARAT HEAVY ELECTRICALS LTD.
04.	*Vendors Bank A/c No.*	11107800029
05.	*Name of Bank*	STATE BANK OF INDIA
06.	*Name of Branch*	COMMERCIAL BR., SALT LAKE, SECTOR-V KOLKATA
07.	*Branch Phone No.*	033-23575666
08.	*City*	KOLKATA
09.	*IFSC Code of the Branch*	SBIN 0004289

The charges if any for payment through RTGS may be recovered from the Bill submitted by us.

Signature of Authorised Representative of Vendor with office seal

के. के. कोआरी / K. K. Coari
उप महाप्रबंधक (वित्त) / Dy. General Manager (Fin)
बी. एच. ई. एल. : पी.एस.ई.आर : कोलकाता - 700 091
BHEL : PSER / Kolkata-700 091

Confirmation by Banker with office seal

State Bank of India ★ (SALT LAKE) 4289 ★ Commercial Branch

Note : Incorrect information will create Accounting complications and payment will be delayed

VOLUME-III
PRICE SCHEDULE, REV-00

JOB: Complete work of handling including receipt of materials from BHEL/Client's stores/storage yard, arranging their issue, site transportation, temporary storage prior to erection, if required, cleaning, transportation to site preservative painting, pre-assembly erection, alignment, welding, leveling, adjustment, chipping & leveling of foundation, all pre-commissioning tests, commissioning, start-up and trial operation and handing over of total Flue Gas Desulphurisation Plant of 3x660 MW, North Karanpura STPP, Jharkhand as per scope.

TENDER NO - PSER:SCT:NKP:M2050:20

PREAMBLE

1	This preamble forms part of tender document and schedule of items. The tenderer should read this preamble carefully before filling in rates for various items. Clauses under this preamble shall be read in conjunction with various volumes of tender and other tender sections as applicable and shall have precedence over any contrary statement mentioned any where in this document.
2	The work shall be carried out strictly as per specifications, description of the items in these schedule and / or engineer's instructions. Drawings enclosd with the tender are only preliminary and for guidence/tender purposes giving some idea of the work involved. The work is to be executed as per terms & conditions of the tender and actual drawings/documents, which shall be furnished during execution.
3	Items of work provided in this schedule but not covered in this specification shall be executed strictly as per instruction of the engineer.
4	Unless specifically mentioned otherwise in the tender document, the tenderer shall quote for the finished items and shall provide for the complete cost towards power, fuel, tools, tackles, equipment, constructional plants, temporary works, labour, dismantling of all temporary piping, structures, valves, pumps, tanks & other misc. equipment, strengthening of roads/culverts/bridges etc. including arranging all clearances etc. required for carrying out different activities & tests, materials, levies, transport, layout, repairs, rectification, maintenance till handing over, supervisions, colonies, shops, establishments, overheads, profits and all incidental items not specifically mentioned but reasonably implied and necessary to complete the work according to the complete tender document and this schedule.
5	The quantities of the various items mentioned in this schedule of items are approximate, based on very preliminary information and may vary to any extent or be deleted altogether. The quoted rates of each item will remain firm throughout the period of execution including extension, for reasons whatsoever, as long as variation in the total value of work executed under any part of this contract including extra items, if any but excluding any price variation remains, within fifteen percent (± 15%) of the awarded price as per LOI.
6	Prior written approval of BHEL shall be sought by the contractor in case quantity variation of any item crosses +50% (plus fifty percent) limit during execution and approval to be obtained before execution of further quantity for this item.
7	In case Sealed /Paper Price Bids are opened for finalisation of the tender, for any Item Rate/BOQ based service contract, possibility of variation of quantity/ addition/deletion of items can not be ruled out. Under such circumstances, after execution of work, if it is observed that standing as L-1 is changed based on actual quantity executed, the bidder shall give suitable rebate to maintain your standing as L-1. Since this aspect can be assessed at the end of execution, necessary adjustment will be effected at the end of execution in final bill.This condition shall not be applicable where the tender is finalised through Reverse Auction.
8	BHEL reserve the right to rationalize the rates, quoted by L-1 bidder against unit rate items and/ or other optional items with respect to item-wise lowest rates (amongst the participating bidders), before placement of order.The rates of unit rate/optional items shall remain valid till execution of the order, if the job/work is awarded to the bidder.
9	The rates quoted shall be inclusive of cleaning of site of any vegetation, dressing , clearing of old structures and leveling etc. including fixing of grid pillars, benchmarks etc. required for commencement of site activities. No separate payment will be made towards the same.However, if separate rate for such item is avalable in the rate schedule, the same shall be considered.
10	Rates shall be quoted in figures and in words in clear legible writing. No overwriting is allowed. All scoring and cancellations should be countersigned and in case of illegibility the interpretation of engineer shall be final. All entries shall be in English language.
11	All works item wise shall be measured upon completion and paid for at the rates quoted and accepted as per BHEL approved payment schedule/billing break-up.
12	The tenderer shall be deemed to have visited site and made himself aware of all the site conditions, studied the specifications and details of work to the done within the time schedule attached and to have acquainted himself of the conditions prevailing at site before submission of his bid/offer. No claim whatsoever due to lack of knowledge of site conditions shall be entertained after award of the work.
13	No splitting of the job is envisaged unless the same is specifically indicated in the TCC/Vol-1F. Decision of BHEL in this regard shall be final and binding to the bidders.
14	Bidders are not allowed to alter the Price Schedule format including item description,quantity etc. and the offer is liable for rejection if the bidders submit their prices in Price Schedules modified by them.BHEL reserves the right to reject the offers of bidders who submit offers in Price Formats which are modiified/altered by them. Also putting any comments instead of rates/price in the designated column of the rate schedule shall make the offer liable for rejection.
15	Bidders to note that for Civil &/Structural packages, against a particular item against a ST No. appearing in more than one schedule of the BOQ, same rate must be quoted in all schedules for that particular items with same descriptions. If by error, different rates are quoted in different schedules for same ST No.(i.e. item with same description), then the higher of the rates shall be considered for evaluation but awarding shall be done with the lower rate ,if the bidder becomes L-1. The same modality shall be applicable for other item rate sevice contracts where item with same decription is repeated in different schedules.
16	For Lumpsum Service Contract : The items/components indicated in the tender is indicative and may vary to any extent. No compensation shall be payable in case of any variation in the items/components listed in the bill of quantities if the executed weight remains within the variation limit. However, in case of deletion of any item or addition of new items over and above the items listed or variation of existing quantity beyond variation limit specified, adjustment (i.e. Payment or recovery as the case may be) shall be done on pro-rata basis based on the Rate per MT worked out from the quoted lump-sum Price and the total weight of components listed /indicated in price schedule plus 15% weight variation limit.
17	Engineer's decision shall be final and binding on the contractor regarding clarification of items in the schedule with respect to the other sections/volumes of the contract.
18	In case of tender for Civil and/or Structural works,if the Non-schedule items are not quoted by the bidder, it will be treated at par with rate of corresponding item of CPWD/PWD/DSR schedule as prescribed in the tender/BOQ cum Rate Schedule. PVC/escalation is not payable for these Non-scheduled items.
19	No interest, whatsoever, shall be payable by BHEL on the security deposit, any bank guarantee submitted or any amount due to successful bidder/contractor. No idling charge whatsoever (either for labour or any other resources) is payable by BHEL for any reason whatsoever.
20	Size and weights of various items are mentioned in the attached BOQ cum rate/price schedule for reference purpose only & these shall not be taken into consideration for quoting/calculating amount in the rate schedule. These shall be utilised as per relevant sections of tender. Bidders shall quote for each item in the rate column, taking unit as mentioned in the quantity column. Rates shall be filled in both figures and words. Amount shall be calculated based upon these rates multiplied by the mentioned quantity for the respective items.
21	Bidder's Total price shall be considered for evaluation unless stated otherwise.
22	In case of BOP packages, if Bidder does not quote/indicate the price for freight chagses against indicated rate schedule, the same shall be considered as 2% of basic price and adjusted with the total quoted price against each item keeping the total quoted price unaltered.

VOLUME-III
PRICE SCHEDULE, REV-00

JOB: Complete work of handling including receipt of materials from BHEL/Client's stores/storage yard, arranging their issue, site transportation, temporary storage prior to erection, if required, cleaning, transportation to site preservative painting, pre-assembly erection, alignment, welding, leveling, adjustment, chipping & leveling of foundation, all pre-commissioning tests, commissioning, start-up and trial operation and handing over of total Flue Gas Desulphurisation Plant of 3x660 MW, North Karanpura STPP, Jharkhand as per scope.

TENDER NO - PSER:SCT:NKP:M2050:20

SCH-1-TOTAL PRICE

SL NO	DESCRIPTION	PRICE SCHEDULE REF	TOTAL PRICE (IN INR)
1.0	**Total price for Complete work of handling including receipt of materials from BHEL/Client's stores/storage yard, arranging their issue, site transportation, temporary storage prior to erection, if required, cleaning, transportation to site preservative painting, pre-assembly erection, alignment, welding, leveling, adjustment, chipping & leveling of foundation, all pre-commissioning tests, commissioning, start-up and trial operation and handing over of total Flue Gas Desulphurisation Plant of 3x660 MW, North Karanpura STPP, Jharkhand as per scope.**	**SCH 2 - PRICE BREAK UP**	***IN FIGURES:-*** ***IN WORDS:-***

NOTE

1.0	Bidder shall quote total price for SCH-2- Part only at Sl No. 1 above. All other amounts / rates of each item of works in respective schedules / parts will be derived based on allocated percentages. As such, any uncalled figure/ amount noted at any other place / schedule of Volume-III will not be recknoed & will stand null & void.
2.0	Bidder to note that total price at Sl No. 1 above shall be considered for evaluation & awarding. As such grand total price should be complete in all respect for the full scope defined and considering all terms and conditions.
3.0	Bidder's quoted total price of SCH-2 at Sl. No 1 above, shall be apportioned into amount of various items of works based on allocated percentages against respective item, in respective schedules / parts. As such, bidder shall not indicate / quote any amount / rate in these schedules / parts and any amount / rate quoted against any item shall not be taken into cognizance / account and offer may be liable for rejection.
4.0	Based on the itemwise percentage allocations, the amount for the individual items of the Bill of Quantity shall be arrived at. The rates of individual items shall be derived from the amount against each items and its quantity after rounding off to upto 2 decimal places. However, RA bill payment shall be done after rounding off the gross amount to two decimal points. Any adjustment, if required, due to such methodology, will be effected / adjusted in final bill.
5.0	Bidders to note that this is an item rate contract. Payment shall be made for the actual quantities of work executed at the unit rate arrived at as per Sl No.4 above.
6.0	Any item as per scope of work, if not included in the price quoted above and shown separately will not be taken cognizance of and the offer shall be liable for rejection.
7.0	Price format shall not be changed by bidder in any case and it may lead to cancellation of their offer.
8.0	The quoted price shall be excluding GST including freight on FOR site basis.
9.0	The quantity of items may vary during execution mainly due to actual requirement etc. The unit rates work out from the overall amount quoted & accepted by BHEL shall be considered and no separate unit rates shall be allowed. Unit rates shall be valid throughout the contract period.

VOLUME-III
PRICE SCHEDULE, REV-00

JOB: Complete work of handling including receipt of materials from BHEL/Client's stores/storage yard, arranging their issue, site transportation, temporary storage prior to erection, if required, cleaning, transportation to site preservative painting, pre-assembly erection, alignment, welding, leveling, adjustment, chipping & leveling of foundation, all pre-commissioning tests, commissioning, start-up and trial operation and handing over of total Flue Gas Desulphurisation Plant of 3x660 MW, North Karanpura STPP, Jharkhand as per scope.

TENDER NO - PSER:SCT:NKP:M2050:20

SCH-2: PRICE BREAK UP

SL. NO	DESCRIPTION OF ITEM	QUANTITY	UOM	WEIGHTAGE
1.1	Structure, Duct and dampers etc as per tender specifications (as per Annexure-III, IV)	29849.00	MT	0.79176032
1.2	Tanks under FGD system etc as per tender specifications (as per Annexure-III,IV)	2346.00	MT	0.08590495
1.3	Rotating Machines etc as per tender specifications (as per Annexure-III,IV,V,VII)	5247.00	MT	0.08883909
1.4	Insulation and sheeting, etc. for FGD system as per specifications.(as per Annexure-III)	114.00	MT	0.00270007
1.5	Piping systems(including valves, flanges ,fittings, H&S etc.) as per tender specifications (as per Annexure –III, VI,VIII, IX)			
1.5.1	SS Piping (as per Annexure VI)	9.00	MT	0.00077626
1.5.2	Carbon steel piping including fire protection piping (as per Annexure –III, IV, V, VI,VIII)	670.00	MT	0.02849906
1.5.3	Carbon steel Buried piping (wrapping and coating) (as per Annexure-VIII)	9.00	MT	0.00035028
1.6	Misc. Equpt./Str steel/ etc.(as per annexure-V, VIII)	19.00	MT	0.00045880
1.7	Providing PG test assistance	3.00	LS	0.00071117
TOTAL				**1.00000000**